Installation Instructions

FLEX Ex Power Supply

Catalog Number 1797-PS2N2

Topic	Page
Important User Information	2
About the Power Supply	3
Understanding System Planning	4
Electrostatic Charge	6
Outputs	6
Mount the 1797-PS2N2 Power Supply	7
Customer Connections	8
1797-PS2N2 Power Supply Mounting Dimensions and Terminal Base Assignments	9
Repair	9
Specifications	10
Certifications	11
UL, C-UL I/O Entity Parameters	13
FM I/O Entity Parameters	16
Ferrite Beads	19

Publication 1797-5.12 - June 2010

Important User Information

Solid state equipment has operational characteristics differing from those of electromechanical equipment. Safety Guidelines for the Application, Installation and Maintenance of Solid State Controls (Publication SGI-1.1 available from your local Rockwell Automation sales office or online at http://literature.rockwellautomation.com) describes some important differences between solid state equipment and hard-wired electromechanical devices. Because of this difference, and also because of the wide variety of uses for solid state equipment, all persons responsible for applying this equipment must satisfy themselves that each intended application of this equipment is acceptable.

In no event will Rockwell Automation, Inc. be responsible or liable for indirect or consequential damages resulting from the use or application of this equipment.

The examples and diagrams in this manual are included solely for illustrative purposes. Because of the many variables and requirements associated with any particular installation, Rockwell Automation, Inc. cannot assume responsibility or liability for actual use based on the examples and diagrams.

No patent liability is assumed by Rockwell Automation, Inc. with respect to use of information, circuits, equipment, or software described in this manual.

Reproduction of the contents of this manual, in whole or in part, without written permission of Rockwell Automation, Inc. is prohibited.

Throughout this manual we use notes to make you aware of safety considerations.

WARNING	Identifies information about practices or circumstances that can cause an explosion in a hazardous environment, which may lead to personal injury or death, property damage, or economic loss.
IMPORTANT	Identifies information that is critical for successful application and understanding of the product.
ATTENTION	Identifies information about practices or circumstances that can lead to personal injury or death, property damage, or economic loss. Attentions help you identify a hazard, avoid a hazard, and recognize the consequence
SHOCK HAZARD	Labels may be on or inside the equipment to alert people that dangerous voltage may be present.
BURN HAZARD	Labels may be on or inside the equipment to alert people that surfaces may be dangerous temperatures.

ATTENTION

This equipment is considered Group 1, Class A industrial equipment according to IEC/CISPR Publication 11. Without appropriate precautions, there may be potential difficulties ensuring electromagnetic compatibility in other environments due to conducted as well as radiated disturbance.

This equipment is supplied as enclosed equipment. It should not require additional system enclosure when used in locations consistent with the enclosure type ratings stated in the Specifications section of this publication. Subsequent sections of this publication may contain additional information regarding specific enclosure type ratings, beyond what this product provides, that are required to comply with certain product safety certifications.

About the Power Supply

1797-PS2N2

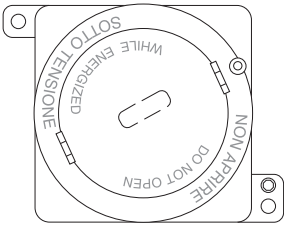

40468

The power supply is an essential component in the operation of an intrinsically safe system. It must isolate the unsafe incoming power from the control system and limit the available energy to IS-safe levels.

No other power source is needed to operate any components attached to the FLEX Ex system in the hazardous area. Power for valves, actuators, or transmitters come from the FLEX Ex modules.

The 1797-PS2N2 is a 24V dc in/quad-Ex dc out power supply in an explosion-proof enclosure with 1 in. conduit pipe-thread input and output terminators.

Features include the following:

- 24V dc supply source
- Four channels, 8.5 W output each channel
- Dual power feeds for source input redundancy
- Outputs are IS galvanically isolated from the source
- All channels are independently IS limited

Understanding System Planning

Part of system planning is determining what modules are needed for the application, how many power supplies are needed, how to best partition the system, and where to locate the system cabinets.

A key task in the development cycle is determining the number of power supply outputs (thus power supplies) you will need. In the following example, you will need eleven power outputs if you are using the fiber hub, which requires 8.5 W.

Modules	Requires	Modules	Requires
Fiber hub	8.5 W	Two thermocouple inputs	1.6 W each
Two ControlNet adapters	8.5 W each	Two digital outputs	7.5 W each
Two analog inputs	7.5 W each	Three NAMUR digital inputs	2.8 W each
Two analog outputs	6.3 W each	Two counter inputs	4.25 W each

Each power supply has four independent IS-power outputs capable of 8.5 W each. In the above example, we required 11 IS-power outputs so three power supplies were sufficient.

The total number of power supplies needed depends on the modules used and the total system configuration. The following illustration shows how this example may be configured.

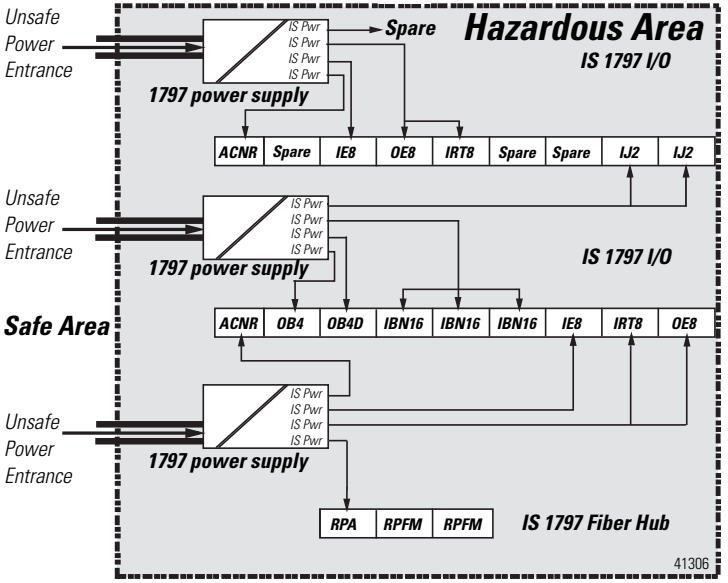

IMPORTANT Even though modules may be supplied with power from the same power-supply output channel, galvanic isolation in the module provides module to module galvanic isolation. Depending upon the module type, galvanic isolation (channel-to-channel within the module) may or may not be provided. See the module's specifications for more information.

Make certain that you only connect intrinsically-safe power supplies to other intrinsically-safe system modules or adapters to maintain the integrity of the intrinsically-safe backplane.

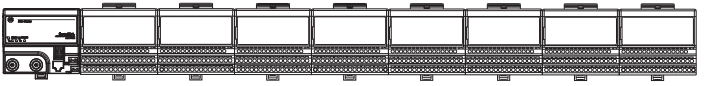

41307

Electrostatic Charge

Protect the system against electrostatic charge. Post a sign near this module.

WARNING Avoid electrostatic charging.

ADVERTÊNCIA! PREVENIR CONTRA O ACÚMULO DE CARGA ELETROSTÁTICA.

For your convenience, a sign that can be cut out and posted is included on the last page of these installation instructions.

Outputs

When using an intrinsically-safe electrical apparatus according to NEC 2002 or CEC 2002, the appropriate USA or Canadian codes must be followed.

The channels in the power supply are electrically connected to each other and have a common +V line.

IMPORTANT You cannot interconnect lines because of the intrinsic safety requirements.

Mount the 1797-PS2N2 Power Supply

Follow these directions to properly install the 1797-PS2N2 power supply.

The 1797-PS2N2 power supplies provide pre-tapped 1 in. NPT (National Pipe Thread) conduit entrance and exit holes. Depending on your local requirements, the hazardous conduit entrance could be through hard conduit or semi-flexible continuous conduit with poured seals, from the safe area.

ATTENTION

- Conduit seals must be installed at the entry of the enclosure (FM) or within 150 mm (6 in.) of the enclosure (UL).
- Use star washers and nuts to make sure you have a good electrical connection. Scrape the paint off the back panel in those areas where grounding bolts will be located.
- Once power has been applied, wait 15 minutes after disconnecting before opening the cover.

Similarly, the IS power exit could be through poured seals, for example. The power supply output wires are IS and require only normal IS treatment once they are sealed at the power supply exit.

1. Unscrew the cover of the power supply to access the input and output terminals.

2. Thread the blue IS-safe output power wiring through the IS power exit seal.

3. Connect the blue IS-safe output power wiring to the output terminals making sure all connections are tight.

   These power supply outputs provide the input power to the FLEX Ex modules.

4. Thread the hazardous incoming power wiring through the conduit, and the hazardous power entrance seal.

5. Connect the hazardous incoming power wiring to the input terminals making sure all connections are tight.

You can daisy chain the hazardous incoming power wiring to further supplies to simplify system wiring.

ATTENTION

Keep hazardous and IS-safe wiring separated in a suitable fashion. Do not leave long, excess wiring that could bridge between hazardous and safe areas as the power supply is closed.

6. Pour the seals and inspect them, as necessary.

7. Screw the lid back into place until tight.

8. Lock the lid by screwing the small set screw located in the bump on the circumference of the lid.

   The set screw prevents the lid from rotating more than half a turn.

Customer Connections

Type of Power Input

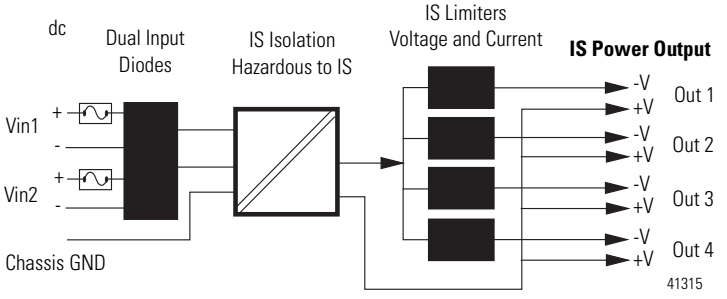

1797-PS2N2 Power Supply Mounting Dimensions and Terminal Base Assignments

Mounting Dimensions

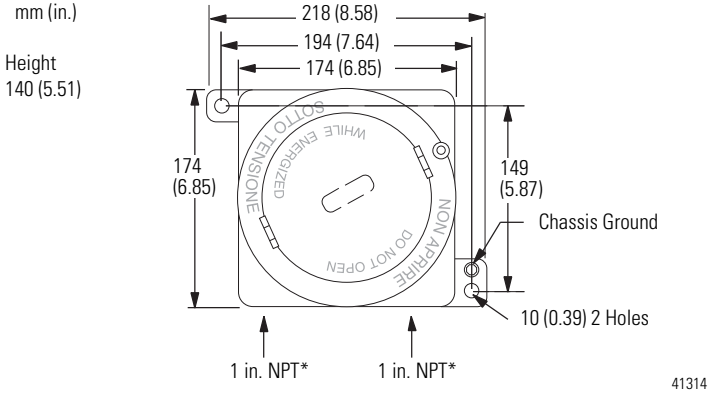

* NPT = National Pipe Thread

Terminal Base Assignments

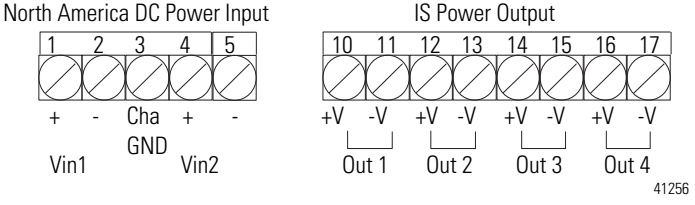

Repair

The power supply is not field-repairable. Any attempt to open this module will void the warranty and IS certification. If repair is necessary, return this module to the factory.

WARNING

If you are replacing a 1797-PS2N power supply with a 1797-PS2N2 power supply, re-verify your entity parameters because they have changed.

Specifications

Table 1 FLEX Ex Power Supply 1797-PS2N2

Attribute	Value
IS module mounting location	Class I Division 1 Groups A, B, C, D Class II Division 1 Groups E, F, G Class III (only UL/cUL) Class I Division 1 Groups B-D T4 (only FM)
IS output type	Class I Division 1 Groups A, B, C, D Class II Division 1 Groups E, F, G Class III (only UL/cUL) Class I Division 1 Groups B-D T4 Class I Zone 1 AEx[ib] IIC (only FM)
Input connectors	24V dc, Terminals 1, 2, 4, 5
Voltage range	19…32V
Current consumption	3.1 A
Ripple	5% ac
Input power entrance	1 in. NPT, 6 in. conduit allowed between power supply and seal (UL and C-UL) 1 in. NPT, 0 in. conduit allowed between power supply and seal (FM)
Output connectors	Terminals 10…17
Output power	4 x 8.5 W
Inset voltage range	19…32V dc
Voltage U_0	≤9.5V
Current I_0	≤1 A
C_0 (IIC)	≤500 nF
L_0 (IIC)	≤8 μH
Output cable resistance, max (both directions)	≤0.1 Ω
Isolation path Input power to output power Output to output	 Galvanic to UL 913 and CSA 157 None
Input power	55 W
Power dissipation	21 W
Thermal dissipation	71.67 BTU/hr
Conductors wire size	4 mm^2 (12 gauge) max wire rated for 100 °C (212 °F) or higher 1.2 mm (3/64 in.) insulation max

Dimensions (HxWxD) approx.	140 x 174 x 174 mm (5.51 x 6.9 x 6.9 in.)
Protections class	IP 66/NEMA 7B
Weight (approx.)	7.3 kg (16 lb)

Table 2 Environmental Specifications

Attribute	Value
Temperature, operating	IEC 60068-2-1 (Test Ad, Operating Cold), IEC 60068-2-2 (Test Bd, Operating Dry Heat), IEC 60068-2-14 (Test Nb, Operating Thermal Shock): -20…70 °C (-4…158 °F)
Temperature, storage	IEC 60068-2-1 (Test Ab, Unpackaged Nonoperating Cold), IEC 60068-2-2 (Test Bb, Unpackaged Nonoperating Dry Heat) -40…85 °C (-40…185 °F)
Relative humidity	IEC 60068-2-30 (Test Db, Unpackaged Nonoperating Damp Heat): 5…95% noncondensing
Shock Operating Nonoperating	IEC60068-2-27 (Test Ea, Unpackaged shock): 15 g 15 g
Vibration	IEC60068-2-6 (Test Fc, Operating): 2 g @ 10…500 Hz
Emissions	CISPR 11 Radiated, Class A Conducted, Class B

Table 3 Certifications

Certifications (when product is marked)[1]	**Value**
UL, C-UL	Associated Apparatus, Class I, Zone 1, AEx ib IIC T4. Providing intrinsically safe circuits for use in Class I, Zone 0, Group IIC Hazardous Locations when installed per Allen-Bradley Control Drawing No. 1797-6.5.6. Associated Apparatus, Class I, Groups A, B, C and D; Class II, Groups E, F and G; Class III Hazardous Locations. Providing intrinsically safe circuits for use in Class I, Groups A, B, C and D; Class II, Groups E, F and G; and Class III Hazardous Locations when installed per Allen-Bradley Control Drawing No. 1797-6.5.6.

FM	Explosionproof Class I, Div 1 Groups B, C, D T4; Associated Apparatus with Intrinsically safe connections Class I, II, III, Div 1, Groups A--G. Associated Apparatus with Intrinsically safe connections Class I Zone 1 [AEx ib] IIC Housing Type 4X
Certificates	
UL, C-UL	UL File Number E197983
FM	FM Certificate Number 3009806

(1) See the Product Certification link at www.ab.com for Declarations of Conformity, Certificates, and other certification details

UL, C-UL I/O Entity Parameters

If this product has the UL/C-UL mark, it has been designed, evaluated, tested, and certified to meet the following standards:

- UL 913, 1988, Intrinsically Safe Apparatus and Associated Apparatus for Use in Class I, II, and III Division 1, Hazardous (Classified) Locations
- UL 1203, Explosion-Proof and Dust-Ignition-Proof Electrical Equipment for Use in Hazardous (Classified) Locations
- UL 2279, Electrical Equipment for Use in Class I, Zone 0, 1, and 2 Hazardous (Classified) Locations
- UL 61010, UL Standard for Safety Electrical Equipment For Measurement, Control, and Laboratory Use; Part 1: General Requirements
- CSA C22.2 No. 157-92, Intrinsically Safe and Non-Incendive Equipment for Use in Hazardous Locations
- CSA C22.2 No. 30-M1986, Explosion-Proof Enclosures for Use in Class I Hazardous Locations
- CSA-E79-0-95, Electrical Apparatus for Explosive Gas Atmospheres, Part 0: General Requirements
- CSA-E79-11-95, Electrical Apparatus for Explosive Gas Atmospheres, Part 11: Intrinsic Safety “i”
- CSA C22.2 No. 14-95, Industrial Control Equipment

Wiring Methods

- Wiring method 1 - Each channel is wired separately.
- Wiring method 2 - Multiple channels in one cable, providing each channel is separated in accordance with the National Electric Code (NEC) or Canadian Electric Code (CEC).

Table 4

1797-PS2N2							
Wiring Method	**Channel**	**Terminals**	**V_{oc} (V)**	**I_{sc} (A)**	**Groups**	**C_a (μF)**	**L_a (μH)**

1 and 2	Any one channel (for example, ch1)	11(+), 10(-)	9.5	1.0	A, B, IIC	0.5	8
					C, E, IIB	1.5	32
					D, F, G, IIA	4.0	64

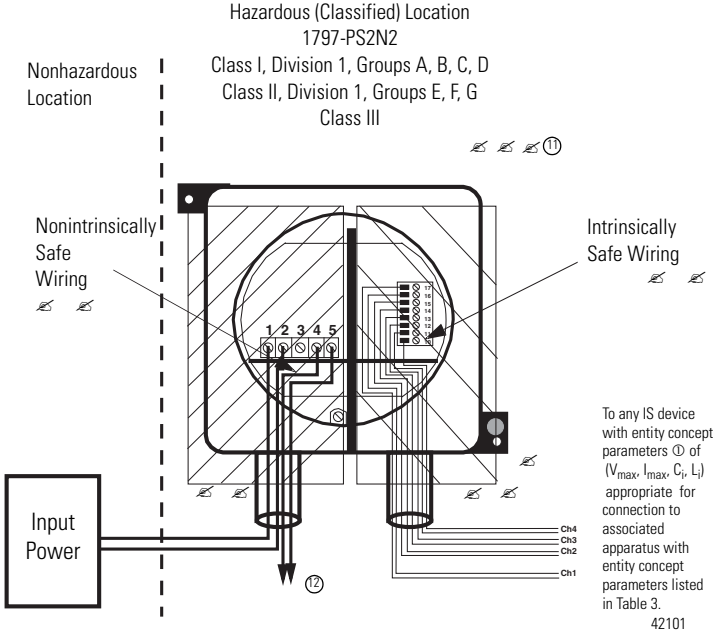

WARNING: Substitution of components may impair intrinsic safety.

AVERTISSEMENT: La substitution de composant peut compromettre la securite intrinseque.

① The entity concept allows interconnection of intrinsically safe apparatus with associated apparatus not specifically examined in combination as a system when the approved values of V_{oc} and I_{sc} of the associated apparatus are less than or equal to V_{max} and I_{max} of the intrinsically-safe apparatus and

the approved values of C_a and L_a of the associated apparatus are greater than $C_i + C_{cable}$ and $L_i + L_{cable}$ respectively for the intrinsically-safe apparatus.

✍ Wiring methods must be in accordance with the NEC, ANSI/NFPA 70, Article 504 or the CEC CSA C22.1, Part 1, Appendix F. For additional information refer to ANSI/ISA RP12.6.

✍ Wiring methods must be in accordance with the NEC, ANSI/NFPA 70, Article 501 or the CEC CSA C22.1, Part 1, Section 18.

✍ For mounting of the power supply, conduit runs must have sealing fittings connected within 6 inches of enclosure.

✍ The wiring contained within the nonintrinsically-safe wiring compartment and the intrinsically-safe wiring compartment shall be separated from each other. Care must be taken to guarantee the separation of nonintrinsically-safe and intrinsically-safe wiring. The partitions within the power supply provide the necessary isolation for the electronics and the wiring, however, extreme care must be taken to guarantee wires are contained within their appropriate compartment and cannot contact any of the electronics.

✍ Cable must be rated at a minimum of 100 °C (212 °F).

✍ **Warning:** Keep cover tightly closed when circuits are alive.

✍ After disconnecting power supply, wait 15 minutes before removing cover.

✍ No live maintenance.

✍ The ambient operating temperature (T_{AMB}) for this system is -20…70 ^{o}C.

⑪ Redundant power supply connection.

FM I/O Entity Parameters

If this product has the FM mark, it has been designed, evaluated, tested, and certified to meet the following standards:

- FM Cl. No. 3600
- FM Cl. No. 3610
- FM Cl. No. 3615
- FM C1 No. 3810
- ANSI/NEMA-250

Wiring Methods

- Wiring method 1 - Each channel is wired separately.
- Wiring method 2 - Multiple channels in one cable, providing each channel is separated in accordance with the National Electric Code (NEC).

Table 5

Wiring Method	Channel	Terminals	V_{oc} (V)	I_{sc} (A)	Group	C_a (μF)	L_a (μH)
1 and 2	Any one channel (for example, ch1)	10(+), 11(-)	9.5	1.0	A, B	0.5	8
					C, E	1.5	24
					D, F, G	4.0	64

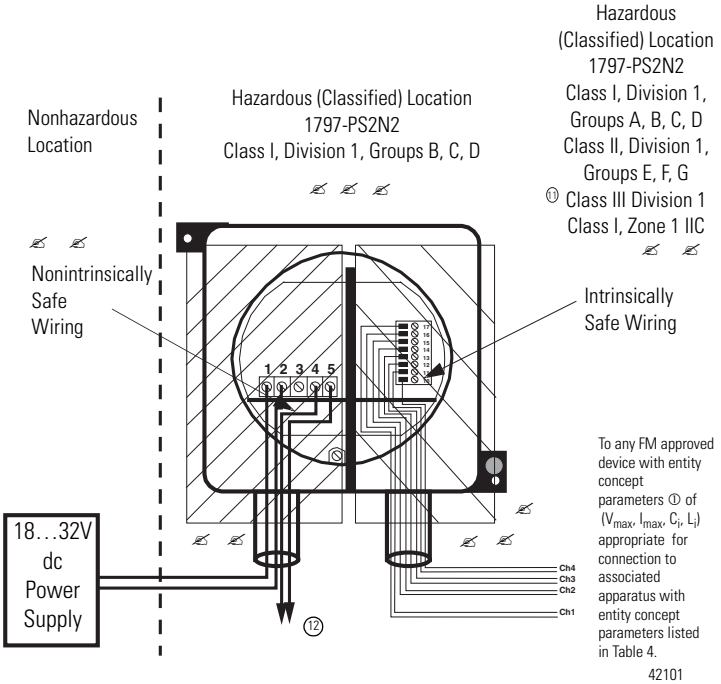

WARNING: Substitution of components may impair intrinsic safety.

AVERTISSEMENT: La substitution de composant peut compromettre la securite intrinseque.

① The entity concept allows interconnection of intrinsically safe apparatus with associated apparatus not specifically examined in combination as a system when the approved values of V_{oc} and I_{sc} of the associated apparatus are less than or equal to V_{max} and I_{max} of the intrinsically-safe apparatus and the approved values of C_a and L_a of the associated apparatus are greater than $C_i + C_{cable}$ and $L_i + L_{cable}$ respectively for the intrinsically-safe apparatus.

✍ Wiring methods must be in accordance with the NEC, ANSI/NFPA 70, Article 504 (Division) or 505 (Zones).

✍ Wiring methods must be in accordance with the NEC, ANSI/NFPA70 Article 501 (Divisions).

✍ Conduit runs must have sealing fittings at the entry of the enclosure.

⑤ The wiring contained within the nonintrinsically-safe wiring compartment and the intrinsically-safe wiring compartment shall be separated from each other. Care must be taken to guarantee the separation of nonintrinsically-safe and intrinsically-safe wiring. The partitions within the power supply provide the necessary isolation for the electronics and the wiring, however, extreme care must be taken to guarantee wires are contained within their appropriate compartment and cannot contact any of the electronics.

✍ Cable must be rated at a minimum of 100 °C (212 °F).

✍ **Warning:** Keep cover tightly closed when circuits are alive.

✍ After disconnecting power supply, wait 15 minutes before removing cover.

✍ No live maintenance.

Ferrite Beads

Pass all IS power-supply output wires through the ferrite bead before connecting the cable to the power supply.

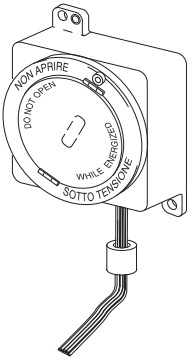

30889

WARNING Avoid electrostatic charging.

ADVERTÊNCIA! PREVENIR CONTRA O ACÚMULO DE CARGA ELETROSTÁTICA.

Rockwell Automation Support

Rockwell Automation provides technical information on the Web to assist you in using its products. At http://support.rockwellautomation.com, you can find technical manuals, a knowledge base of FAQs, technical and application notes, sample code and links to software service packs, and a MySupport feature that you can customize to make the best use of these tools.

For an additional level of technical phone support for installation, configuration, and troubleshooting, we offer TechConnect Support programs. For more information, contact your local distributor or Rockwell Automation representative, or visit http://support.rockwellautomation.com.

Installation Assistance

If you experience a problem with a hardware module within the first 24 hours of installation, please review the information that's contained in this manual. You can also contact a special Customer Support number for initial help in getting your module up and running.

United States	1.440.646.3434 Monday – Friday, 8am – 5pm EST
Outside United States	Please contact your local Rockwell Automation representative for any technical support issues.

New Product Satisfaction Return

Rockwell tests all of its products to ensure that they are fully operational when shipped from the manufacturing facility. However, if your product is not functioning, it may need to be returned.

United States	Contact your distributor. You must provide a Customer Support case number (see phone number above to obtain one) to your distributor in order to complete the return process.
Outside United States	Please contact your local Rockwell Automation representative for return procedure.

Allen-Bradley, Rockwell Automation, ControlLogix, RSLinx, TechConnect, and FLEX I/O are trademarks of Rockwell Automation, Inc.

Trademarks not belonging to Rockwell Automation are property of their respective companies.

www.rockwellautomation.com

Power, Control and Information Solutions Headquarters

Americas: Rockwell Automation, 1201 South Second Street, Milwaukee, WI 53204-2496 USA, Tel: (1) 414.382.2000, Fax: (1) 414.382.4444
Europe/Middle East/Africa: Rockwell Automation, Vorstlaan/Boulevard du Souverain 36, 1170 Brussels, Belgium, Tel: (32) 2 663 0600, Fax: (32) 2 663 0640
Asia Pacific: Rockwell Automation, Level 14, Core F, Cyberport 3, 100 Cyberport Road, Hong Kong, Tel: (852) 2887 4788, Fax: (852) 2508 1846

Publication 1797-5.12 - June 2010 PN -79497

Supersedes Publication 1797-5.12 - April 2009
Copyright © 2010 Rockwell Automation, Inc. All rights reserved. Printed in the U.S.A.