Installation Instructions
873E RightSound™ Ultrasonic Opposed Mode Sensors

- Continuously adjustable emitter amplitude with instability indicator allows for simple optimized adjustment over 2 inch to 30 inch sensing range.
- Ideal solution for sensing clear objects or materials including glass and plastic bottles.
- Highly immune to ambient sonic and electrical noise.
- Popular right angle package allows through hole mounting as well as 18mm threaded mounting hubs on the sensor nose and base.
- Highly visible 360° indicators conveniently mounted at the top of the sensor.
- Designed to Rugged Food Industry Standards: enclosure rated for 1200psi washdown as well as NEMA 4X, 6P and IP67 water ingress standards.
- Receivers come with both NPN (sinking) and PNP (sourcing) outputs; output logic switchable via polarity of receiver power wiring; simplified product selection… Select a 6.5 foot cable or a 6 inch pigtail quick-disconnect and cordset and you're ready to start sensing!
- 10.8–30V DC operation with protections for short circuit, overload, reverse polarity, false pulse and transient noise

Description

RightSound Bulletin 873E sensors are opposed mode ultrasonic sensors consisting of an emitter and a receiver. The receiver is microprocessor based to provide advanced temperature stability and noise immunity. A red instability indicator LED is used to signal the operator when an unreliable sensing condition is present due to low or high emitter sound levels or of adverse environmental conditions. Green power LEDs indicate power status to the emitter and receiver. A yellow output energized LED indicates when the receiver output is on. Precise tuning of the receiver to the emitter minimizes interference from ambient noise sources.

A major advantage of the RightSound sensor is the emitter volume control. The emitter volume control allows the operator to correctly adjust the volume for the sensing distance (distance from the emitter to the receiver) and other variables of a given application (i.e., target speed and spacing, etc.). For further details on this subject, please refer to page 4 of this document, Application Information.

The sensing of clear objects, which can be difficult to do reliably with photoelectric controls, is made highly reliable with RightSound ultrasonic sensors. RightSound sensors have been designed for demanding environments, especially those of the Food and Beverage Industry. The NORYL housings are extremely rugged and are rated for 1200psi washdown and NEMA 4X and 6P standards. The acoustic faces of the emitter and receiver are made of FDA compliant silicone rubber for maximum durability and water ingress protection.

RightSounds require 10.8V DC to 30V DC power. Receivers come with both NPN current sinking and PNP current sourcing outputs. Both outputs are rated 100mA. The receiver has the ability to operate in either a normally open or normally closed mode. The modes are selected by the polarity of receiver supply voltage (see Wiring Diagrams on page 2). When the receiver is in the normally open mode, the output conducts when the receiver hears a RightSound emitter. When the receiver is in the normally closed mode, the output conducts when the sonic beam from the emitter is blocked or not present.

Selection Guide

Bulletin Number	Sensor Type	Termination	Operating Voltage Supply Current
873E–EDZZ0750A2	Emitter	2m (6.5ft) Cable 300V	10.8–30V DC 20mA @ 20°C 100mA @ –25°C
873E–EDZZ0750F4	Emitter	Micro Style QD	
873E–RDTT0750A2	Receiver	2m (6.5ft) Cable 300V	10.8–30V DC 10mA
873E–RDTT0750F4	Receiver	Micro Style QD	

Specifications

Emitter	873E–EDZZ0750A2 (2m (6.5ft) 300V cable) 873E–EDZZ0750F4 (4-pin DC micro style QD pigtail)
Receiver	873E–RDTT0750A2 (2m (6.5ft) 300V cable) 873E–RDTT0750F4 (4-pin DC micro style QD pigtail)
Sensing Mode	Opposed
Sensing Range	50mm to 750mm (2in to 30in)
Unit Protection	False Pulse, Transient Noise, Short Circuit, Overload, Reverse Polarity
Operating Voltage	10.8–30V DC
Output Type	NPN/PNP
Output Mode	Normally Open/Normally Closed
Load Current	100mA max.
Leakage Current	0.1mA max.
Response Time	<2.5ms
Power-up Delay	<300ms
Max. Switching Frequency	125Hz
Ultrasonic Frequency	200–240kHz
Ultrasonic Pulse Cone Angle	(+/–) 5°
Housing Material	Noryl
Sensing Face Material	FDA compliant silicone rubber
LED Indicators	See table below
Operating Environment	NEMA 4X, 6P, IP67 (IEC529); 1200psi (8270kPa) washdown
Connection	Cable: #22 AWG PVC, 2m (6.5ft) QD: 4-pin DC micro style male receptacle on pigtail
Vibration	20G, 10–55Hz (non-operational)
Operating Temperature	–25°C to +70°C (–13°F to +158°F)
Storage Temperature	–40°C to +85°C (–40°F to +185°F)
Operating Humidity	Not to exceed 95%, noncondensing
Approvals	UL, c–UL, and CE marked for all applicable directives
Standards	IEC 60947–5–2, EN60947–5–2

LED Indicator Lights

Sensor Type	Label	Color	State	Status
Emitter	—	Green	On	Sensor powered
Receiver	PWR	Green	On	Sensor powered
	OUT	Yellow	On	Output is conducting
	MAR/ SCP	Red	On	Unreliable sensing condition
			Flashing	Output in overload or short circuit

Dimensions—mm (in)

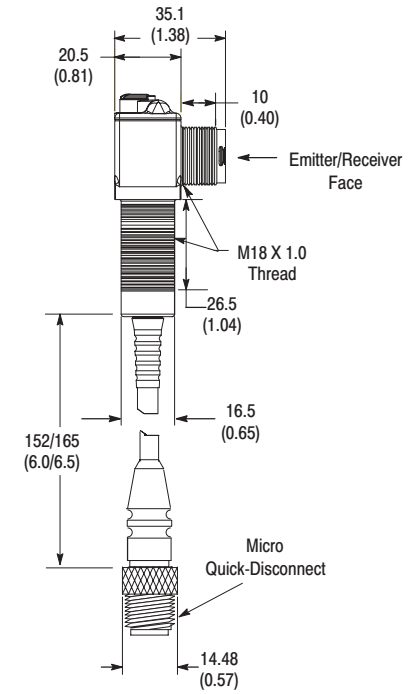

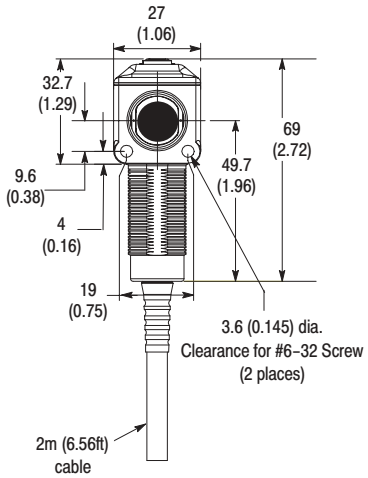

LED and Adjustment Locations

RightSound Ultrasonic Receiver

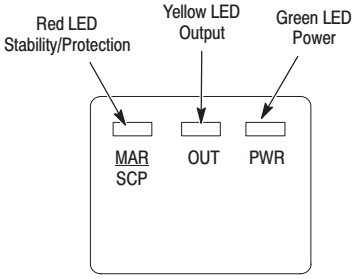

RightSound Ultrasonic Emitter

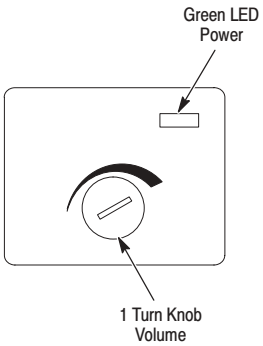

Wiring Diagrams

Receivers with Quick-Disconnect

Normally Open Configuration

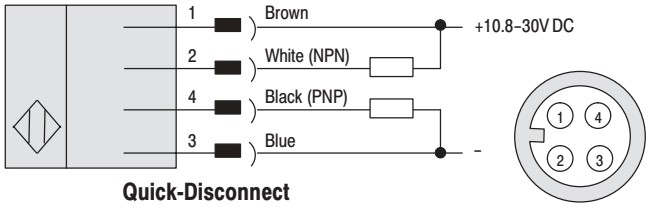

Quick-Disconnect

Normally Closed Configuration

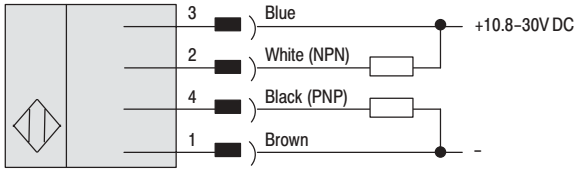

Quick-Disconnect

Emitter with Quick-Disconnect

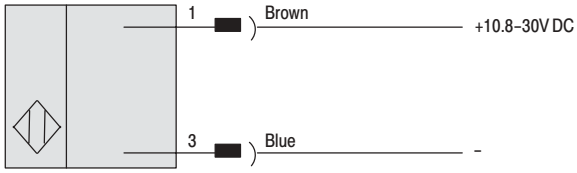

Quick-Disconnect

Receivers with Cable

Normally Open Configuration

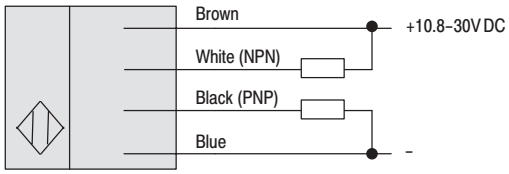

Cable

Normally Closed Configuration

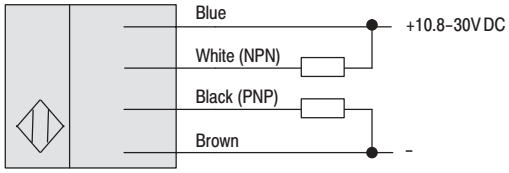

Cable

Emitter with Cable

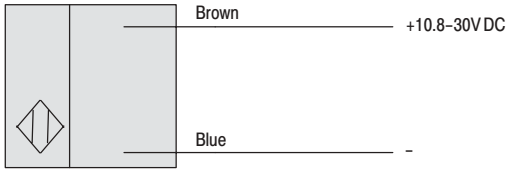

Cable

Specifications

Coupling Nut	Nickel-Plated Brass
Connector	Molded oil-resistant polyurethane body
Contacts	Gold over nickel-plated brass
Cable	Oil-resistant PVC jacket, 22AWG conductors, 300V, UL recognized and CSA certified
Cable O.D.	4/c = 5mm (0.21in) 5/c = 6.5mm (0.25in)
Temperature	–20°C to +105°C (–4°F to +221°F)

Features

- UL recognized and CSA certified
- Ratcheting coupling nut (on 4-pin DC cordsets)
- Highly visible yellow PVC jacket offers good oil and chemical resistance

Dimensions—mm (in)

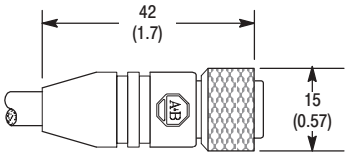

Straight Female

Dimensions are approximate.
Illustrations are not drawn to scale.

Selection Guide

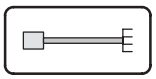

Female Connector (Sensor End)		Cable			
Face View of Female	**Connector Style**	**Wire Color**	**Wire Rating**	**Length—m (ft)**	**Catalog Number**
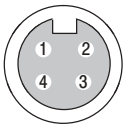	Straight	1 Brown 2 White 3 Blue 4 Black	22AWG 300V 3A	2 (6.5)	**889D–F4AC–2**
				5 (16.4)	**889D–F4AC–5**
				10 (32.8)	**889D–F4AC–10**

Application Information

Operating Distance Selection

Operating distance is defined as the distance from the emitter face to the receiver face. The maximum operating distance is based on installing the control in a clean environment. Normal industrial environments actually range from moderately dusty to extremely dirty. In these environments, greater sensor response may be required which can be obtained by reducing the operating distance of the control or by increasing the volume adjustment of the emitter (turn clockwise).

Application Precautions

With very small separation between the emitter and the receiver, it may be necessary to misalign the receiver by about 5° off axis to reduce the effect of reflections.

The product may not function correctly if mounted too close to high energy ultrasonic sources (such as ultrasonic welders or cleaners). If such sources are present, set a blocking target so that the red margin indicator just turns off and then activate the welder or cleaner. If the margin indicator turns on or flashes, greater physical separation between the sensors and the noise source is required.

CAUTION: Care should be taken to prevent applying force to the emitter/receiver face. This can damage the sensor.

Adjacent Pairs of Emitters/Receivers

When emitter/receiver pairs are used in close proximity, precautions must be taken to prevent crosstalk (the response of a receiver to the wrong emitter). Emitters should always be pointed in the same direction so that the sonic beams are parallel to each other.

A minimum spacing of 5cm (2in) must be maintained between adjacent pairs for emitter-receiver separations of up to 15cm (6in). Add 1cm (0.4in) of adjacent pair spacing for every additional 10cm (4in) of emitter-receiver separation beyond 15cm (6in).

Installation

The controls should also be set up away from sources of powerful airflow (such as fans or blowers) and away from powerful direct heat sources (such as space heaters or open ovens).

The control must be securely mounted on a firm, stable surface or support. A mounting which is subject to excessive vibration or shifting may cause intermittent operation.

Wiring

All external wiring should conform to the National Electrical Code and applicable local codes. See wiring diagrams for external connections.

Alignment

1. Connect load(s) to the receiver.
2. Apply 10.8–30V DC power to the emitter and receiver.

   The GREEN indicator must turn *ON* on both emitter and receiver.
3. Position the receiver sensing face opposite the emitter sensing face, with a separation of no more than 30″. Center the acoustic beam by aligning the emitter and receiver on the same axis.
4. If the RED indicator is *ON*, adjust the transmitter SENSITIVITY until the RED indicator light turns *OFF*.
5. Breaking the acoustic beam with a target object will now cause the output to switch, as indicated by the YELLOW indicator.

In certain applications, the sensing target will break the center of the acoustic beam, halfway between the transmitter and receiver controls. With smaller sensing targets (a surface less than 1/2″ wide), it may be necessary to position the transmitter and receiver controls so that the target breaks the acoustic beam closer to the face of the transmitter or receiver. If the sensing target is large (a surface wider than 1″), greater noise immunity may be obtained by increasing the sensitivity setting further, but not to the point where the RED indicator lights when the target is present.

In general, operation with the RED indicator illuminated either when the target is present or absent should be avoided by adjusting the sensitivity setting smaller (counterclockwise) if the RED indicator illuminates when the target is present or greater (clockwise) if the RED indicator illuminates when the target is absent.

Warranty

Rockwell Automation/Allen-Bradley does not supply warranty information with documentation that ships with products. Warranty information can be found in the *Sensors* catalog in the “General” section. This can be reached via the Internet at *www.ab.com/catalogs*.