Technical Data

Original Instructions

PowerFlex 4M Adjustable Frequency AC Drives

Catalog Number 22F

Topic	Page
Summary of Changes	2
Product Overview	3
Reference Materials	3
Startup, Programming, and Operation	3
Packaging and Mounting	4
Optimized Performance	4
Communications	5
Feed-through Wiring Design	5
PC Programming Software	5
Catalog Number Explanation	6
Product Selection	7
User Installed Options	8
Installation Considerations	11
Specifications	12
Product Dimensions	15

Summary of Changes

This publication contains the following new or updated information. This list includes substantive updates only and is not intended to reflect all changes.

Topic	Page
Updated template	throughout
Removed information for discontinued programming softwares support	throughout
Added Connected Components Workbench software information	5, 9
Updated communication option kits and accessories	8
Added Terminators to user installed options	9
Added reflected wave reduction module with common mode choke catalog number 1204-RWC-17-A to user installed options topic	9
Added reflected wave reduction module to user installed options topic	9
Added spare parts information for fan kits and cover	9
Replaced C-tick logo with RCM	13

Product Overview

Providing users with powerful motor speed control in a compact, space saving design, the Allen-Bradley® PowerFlex® family of drives. Ideal for machine level speed control, the PowerFlex 4M drive provides the application versatility to meet the demands of global OEMs and end users who require space savings and easy-to-use AC drives that provide application flexibility, feed-through wiring and ease-of-programming. The PowerFlex 4M AC drive is available in three frame sizes (A, B, and C) and power ratings from 0.2 to 11 kW (0.25 to 15 Hp) and in voltage classes of 120 volts, 240 volts and 480 volts.

Reference Materials

For additional PowerFlex 4M data and general drive information, see the following publications:

Title	Publication	Available Online
PowerFlex 4M User Manual	22F-UM001	rok.auto/literature
Wiring and Grounding Guidelines for Pulse Width Modulated (PWM) AC Drives	DRIVES-IN001	
Preventive Maintenance Checklist of Industrial Control and Drive System Equipment	DRIVES-TD001	
Safety Guidelines for the Application, Installation and Maintenance of Solid-State Control	SGI-1.1	

Startup, Programming, and Operation

- An **integral keypad** provides out of the box operation using the local potentiometer and control keys.
- The 12 most common application parameters are contained in the **Basic Program Group**, making programming fast and easy.
- The **programming keys** have the same function as all other PowerFlex drives, so if you can program one PowerFlex drive, you can program them all.
- **4-digit display** with 10 additional LED indicators provides an intuitive display of drive status and information.
- Integral **RS-485 communications** can be used for programming from a PC. It can also be used in a multi-drop network configuration. A serial converter module provides connectivity to any controller with a DF1 port.
- A **NEMA/UL Type 4X** remote and **NEMA/UL Type 1 handheld LCD keypad** provide additional programming and control flexibility, both featuring the popular Copycat function.

Packaging and Mounting

- Installation can be a virtual snap using the **DIN rail mounting** feature on A and B frame drives. Panel mounting is also available, providing added flexibility.
- **Zero Stacking** is allowable for ambient temperatures up to 40 °C, saving valuable panel space. 50 °C ambient temperatures are permitted with minimal spacing between drives.
- Integral filtering is available on all 240V single-phase and 480V three phase ratings, providing a cost-effective means of meeting EN61800-3. External filters for all PowerFlex 4M drive ratings are also available.

Optimized Performance

- **Removable MOV** to ground ensures reliable operation with ungrounded or resistive distribution systems.
- A **relay precharge** limits inrush current.
- **Integral brake transistor**, available on Frame C drives, provides dynamic braking capability with simple low cost brake resistors.
- DIP switch settable **24V DC sink or source control** for control wiring flexibility.
- 0.25...150% overload for 60 seconds or 200% overload for 3 seconds provides **robust overload protection**.
- Adjustable PWM frequency up to 10 kHz ensures quiet operation.
- Volts per Hertz Control Performance.
- Drive automatically provides auto boost (IR compensation) and slip compensation.
- Provides excellent speed regulation and high levels of torque across the entire speed range of the drive, and improved speed regulation even as loading increases.

Communications

- A **Serial Converter Module** provides connectivity to any controller that has the ability to initiate DFI messaging.
  - Bluetooth - Wireless/DF1 to RS 485/DSI
- **Integral RS485/DSI communications** enable the drives to be used in a multi-drop network configuration.
- Integral communication cards such as **DeviceNet**®, **EtherNet/IP**™, **PROFIBUS DP**, **LonWorks**, **BACnet** and, **ControlNet**® can improve machine performance. These cards are optional and *can only be used with an external DSI communications kit*.
- The DSI Wireless Interface Module (WIM) provides a wireless communication interface between a Pocket PC, laptop computer or desktop computer equipped with Bluetooth wireless technology, and any Allen-Bradley product supporting the DSI protocol.
- RS485/DSI = Modbus RTU
  - Directly compatible with PanelView™ products using RTU master capability
  - Direct compatibility with MicroLogix™ RTU master capability
  - Compatible with SLC™ 500 and ControlLogix®, using third-party scanners with RTU Master capability

Feed-through Wiring Design

- Feed through wiring for simple retrofitting into applications requiring variable speed motor control.
- Feed-through wiring design provides simple variable speed motor control with minimal installation and retrofitting time.

PC Programming Software

Connected Components Workbench Software

Connected Components Workbench™ software is a windows-based software packages for programming and configuring Allen-Bradley drives and other Rockwell Automation products. See rok.auto/ccw.
Compatibilty: Windows® XP, Windows Vista and Windows 7

- Online and offline programming capability.
- Operate the drive via an on-screen Control Bar, which is a tool that allows you to start, stop, and change the speed reference of the drive.
- Save, restore, and print parameter information.
- Edit, upload, and download parameters.
- Immediate visual indication of drive and communication status when viewing online drive.

Catalog Number Explanation

Position

1-3	4	5	6-8	9	10	11	12	13-14
22F	–	D	018	N	1	0	4	AA
a		b	c	d	e	f	g	h

a

Drive	
Code	Type
22F	PowerFlex 4M

b

Voltage Rating		
Code	Voltage	Ph.
V	120V AC	1
A	240V AC	1
B	240V AC	3
D	480V AC	3

c1

Rating		
100…120V AC, Single-Phase Input		
Code	Amps	kW (Hp)
1P6	1.6	0.2 (0.25)
2P5	2.5	0.4 (0.5)
4P5	4.5	0.75 (1.0)
6P0	6.0	1.1 (1.5)

c2

Rating		
200…240V AC, Single-Phase Input		
Code	Amps	kW (Hp)
1P6	1.6	0.2 (0.25)
2P5	2.5	0.4 (0.5)
4P2	4.2	0.75 (1.0)
8P0	8.0	1.5 (2.0)
011	11	2.2 (3.0)

c3

Rating		
200-240V AC, Three-Phase Input		
Code	Amps	kW (Hp)
1P6	1.6	0.2 (0.25)
2P5	2.5	0.4 (0.5)
4P2	4.2	0.75 (1.0)
8P0	8.0	1.5 (2.0)
012	12.0	2.2 (3.0)
017	17.5	3.7 (5.0)
025	25.0	5.5 (7.5)
033	33.0	7.5 (10.0)

c4

Rating		
380…480V AC, Three-Phase Input		
Code	Amps	kW (Hp)
1P5	1.5	0.4 (0.5)
2P5	2.5	0.75 (1.0)
4P2	4.2	1.5 (2.0)
6P0	6.0	2.2 (3.0)
8P7	8.7	3.7 (5.0)
013	13.0	5.5 (7.5)
018	18.0	7.5 (10.0)
024	24.0	10.0 (15.0)

d

Enclosure	
Code	Enclosure
N	Panel Mount - IP20 (NEMA/UL Type Open)

e

HIM	
Code	Interface Module
1	Fixed Keypad

f

Emission Class	
Code	EMC Filter
0	No Filter
1	Filter

g

Brake	
Code	Description
3	No Brake IGBT
4	Standard

h

Reserved	
Code	Description
AA through ZZ	Reserved

Product Selection

120V AC, Single-Phase Drives (50/60 Hz)

Drive Ratings				IP20, NEMA/UL Open Type
		Output Current		
kW	Hp	A	Frame Size	Cat. No.
0.2	0.25	1.6	A	22F-V1P6N103
0.4	0.5	2.5	A	22F-V2P5N103
0.75	1	4.5	B	22F-V4P5N103
1.1	1.5	6	B	22F-V6P0N103

240V AC, Single-Phase Drives (50/60 Hz)

Drive Ratings				IP20, NEMA/UL Open Type	w/Integral "S Type" EMC Filter[1]
		Output Current			
kW	Hp	A	Frame Size	Cat. No.	Cat. No.
0.2	0.25	1.6	A	22F-A1P6N103	22F-A1P6N113
0.4	0.5	2.5	A	22F-A2P5N103	22F-A2P5N113
0.75	1	4.2	A	22F-A4P2N103	22F-A4P2N113
1.5	2	8	B	22F-A8P0N103	22F-A8P0N113
2.2	3	11	B	22F-A011N103	22F-A011N113

(1) This filter is suitable for use with a cable length of up to 5 meters for class A environments and up to 1 meter for class B environments.

240V AC, Three-Phase Drives (50/60 Hz)

Drive Ratings				IP20, NEMA/UL Open Type
		Output Current		
kW	Hp	A	Frame Size	Cat. No.
0.2	0.25	1.6	A	22F-B1P6N103
0.4	0.5	2.5	A	22F-B2P5N103
0.75	1	4.2	A	22F-B4P2N103
1.5	2	8	A	22F-B8P0N103
2.2	3	12	B	22F-B012N103
3.7	5	17.5	B	22F-B017N103
w/ Brake				
5.5	7.5	25	C	22F-B025N104
7.5	10	33	C	22F-B033N104

480V AC, Three-Phase Drives (50/60 Hz)

Drive Ratings				IP20, NEMA/UL Open Type	w/Integral "S Type" EMC Filter[1]
		Output Current			
kW	Hp	A	Frame Size	Cat. No.	Cat. No.
0.4	0.5	1.5	A	22F-D1P5N103	22F-D1P5N113
0.75	1	2.5	A	22F-D2P5N103	22F-D2P5N113
1.5	2	4.2	B	22F-D4P2N103	22F-D4P2N113
2.2	3	6	B	22F-D6P0N103	22F-D6P0N113
3.7	5	8.7	B	22F-D8P7N103	22F-D8P7N113
w/Brake					
5.5	7.5	13	C	22F-D013N104	22F-D013N114
7.5	10	18	C	22F-D018N104	22F-D018N114
11	15	24	C	22F-D024N104	22F-D024N114

(1) This filter is suitable for use with a cable length of up to 10 meters for Class A environments.

User Installed Options

Description	Cat. No.
Remote (Panel Mount) LCD Display, Digital Speed Control, CopyCat Capable. IP66 (NEMA/UL Type 4X/12) Indoor Use Only. Includes 2.0 m cable.	22-HIM-C2S[1]
Remote Handheld, LCD Display, Full Numeric Keypad, Digital Speed Control, CopyCat Capable. IP30 (NEMA/UL Type 1). Includes 1.0 m cable. Panel mount with optional Bezel Kit.	22-HIM-A3
Bezel Kit. Panel Mount for LCD Display, Remote Handheld Unit. IP30 (NEMA/UL Type 1). Includes a 22-RJ45CBL-C20 cable.	22-HIM-B1
DSI HIM Cable (DSI HIM to RJ45 cable)	
1.0 m (3.3 ft)	22-HIM-H10
2.9 m (9.51 ft)	22-HIM-H30

(1) The 22-HIM-C2S is smaller than the 22-HIM-C2 and cannot be used as a direct replacement

Description	Cat. No.
Universal Serial Bus (USB) Converter includes 2.0 m USB, 20-HIM-H10 & 22-HIM-H10 Cables	1203-USB
DSI Cable 2.0 m RJ45 to RJ45 cable, male to male connectors.	22-RJ45CBL-C20
Splitter Cable RJ45 one to two port splitter cable.	AK-U0-RJ45-SC1
Terminating Resistors 120 Ohm resistor embedded in an RJ45 connector (2 pieces).	AK-U0-RJ45-TR1
Terminal Block RJ45 two position terminal block (6 pieces) with two 120 Ohm terminating resistors (loose).	AK-U0-RJ45-TB2P
DSI External Communications Kit External mounting kit for 22-COMM Communication Adapters.	22-XCOMM-DC-BASE
External Comms Power Supply Optional 100…240V AC Power Supply for External DSI Communications Kit.	20-XCOMM-AC-PS1
BACnet MS/TP RS485 Communication Adapter[1]	22-COMM-B
ControlNet Communication Adapter[1]	22-COMM-C
DeviceNet Communication Adapter[1]	22-COMM-D
EtherNet/IP Communication Adapter[1]	22-COMM-E
PROFIBUS DP Communication Adapter[1]	22-COMM-P
Compact I/O™ Module (3 Channel)	1769-SM2

(1) PowerFlex 4M drives require External DSI Communication Kits. Communication Adapters cannot be drive mounted.

Dynamic Brake Resistors

Drive Ratings			Minimum Resistance	
Input Voltage	kW	Hp	Ω	Cat. No.[1]
240V, 50/60 Hz, Three-Phase	5.5	7.5	13	AK-R2-030P1K2
	7.5	10	10	AK-R2-030P1K2
480V, 50/60 Hz, Three-Phase	5.5	7.5	55	AK-R2-120P1K2
	7.5	10	39	AK-R2-120P1K2
	11	15	24	AK-R2-120P1K2[2]

(1) Resistors listed in this table are rated 5% duty cycle.
(2) Requires two resistors wired in parallel.

Input Line Reactors - 3% Impedance

Input Voltage	kW	Hp	Fundamental Amps	Maximum Continuous Amps	Inductance	Watts Loss	Cat. No.[1]
			A	A	mh	W	
240V, 50/60 Hz, Three-Phase	0.2	0.25	2.0	3.0	12	7.5	1321-3R2-A
	0.4	0.5	4.0	6.0	6.5	20	1321-3R4-B
	0.75	1.0	8.0	12	3.0	29	1321-3R8-B
	1.5	2.0	8.0	12	1.5	19.5	1321-3R8-A
	2.2	3.0	12	18	1.25	26	1321-3R12-A
	3.7	5.0	18	27	0.8	36	1321-3R18-A
	5.5	7.5	25	37.5	0.5	48	1321-3R25-A
	7.5	10	35	52.5	0.4	49	1321-3R35-A
480V, 50/60 Hz, Three-Phase	0.4	0.5	2.0	3.0	20	11.3	1321-3R2-B
	0.75	1.0	4.0	6.0	9.0	20	1321-3R4-C
	1.5	2.0	4.0	6.0	6.5	20	1321-3R4-B
	2.2	3.0	8.0	12	5.0	25.3	1321-3R8-C
	4.0	5.0	12	18	2.5	31	1321-3R8-B
	5.5	7.5	12	18	2.5	31	1321-3R12-B
	7.5	10	18	27	1.5	43	1321-3R18-B
	11	15	25	37.5	1.2	52	1321-3R25-B

(1) Catalog numbers listed are for 3% impedance open style units. NEMA/UL Type 1 and 5% impedance reactor types are also available.

See 1321 Power Conditioning Products Technical Data, publication, 1321-TD001, for more information.

PC Programming Software

Item	Description	
Connected Components Workbench Software (Download via the Software Subscription Portal or DVD-ROM) rok.auto/ccw	Windows-based software packages for programming and configuring Allen-Bradley drives and other Rockwell Automation products. Compatibility: Windows XP, Windows Vista, and Windows 7.	See rok.auto/ccw for more information.

Terminators

Description[1]	Catalog No.
For use with 3.7 kW (5 Hp) and below drives	1204-TFA1
For use with 1.5 kW (2 Hp) and above drives	1204-TFB2

(1) For selection information, see Appendix A of the Wiring and Grounding Guidelines for Pulse Width Modulated (PWM) AC Drives, publication DRIVES-IN001.

Reflected Wave Reduction Modules w/Common Mode Choke

Description[1]	Catalog No.
17A with Common Mode Choke	1204-RWC-17-A

(1) For selection information, see Appendix A of the Wiring and Grounding Guidelines for Pulse Width Modulated (PWM) AC Drives, publication DRIVES-IN001.

Reflected Wave Reduction Modules

Voltage	ND kW	ND HP	Catalog No.
380...480V AC	2.2...4	3...5	1321-RWR8-DP
	4	5	1321-RWR12-DP
	5.5	7.5	1321-RWR18-DP
	7.5	10	1321-RWR25-DP
	11	15	1321-RWR25-DP

Spare Parts

Item	Description	Catalog No.
Fan Replacement Kits	Fan Replacement Kit - Frame A	SK-U1-FFAN1-A1
	Fan Replacement Kit - Frame B	SK-U1-FFAN1-B1
	Fan Replacement Kit - Frame C	SK-U1-FFAN1-C1
Covers	Frame A Cover	SK-U1-FCVR-A1
	Frame B Cover	SK-U1-FCVR-B1
	Frame C Cover	SK-U1-FCVR-C1

EMC Filters[1]

Drive Ratings			S Type Filter	L Type Filter
Input Voltage	kW	Hp	Cat. No.[2]	Cat. No.[4]
120V, 50/60 Hz, Single-Phase	0.2	0.25	–	22F-RF010-AL
	0.4	0.5	–	22F-RF010-AL
	0.75	1.0	–	22F-RF025-BL
	1.1	1.5	–	22F-RF025-BL
240V, 50/60 Hz, Single-Phase	0.2	0.25	–[3]	22F-RF010-AL
	0.4	0.5	–[3]	22F-RF010-AL
	0.75	1.0	–[3]	22F-RF010-AL
	1.5	2.0	–[3]	22F-RF025-BL
	2.2	3.0	–[3]	22F-RF025-BL
240V, 50/60 Hz, Three-Phase	0.2	0.25	22F-RF9P5-AS	22F-RF9P5-AL
	0.4	0.5	22F-RF9P5-AS	22F-RF9P5-AL
	0.75	1.0	22F-RF9P5-AS	22F-RF9P5-AL
	1.5	2.0	22F-RF9P5-AS	22F-RF9P5-AL
	2.2	3.0	22F-RF021-BS	22F-RF021-BL
	3.7	5.0	22F-RF021-BS	22F-RF021-BL
	5.5	7.5	22F-RF039-CS	22F-RF039-CL
	7.5	10	22F-RF039-CS	22F-RF039-CL
480V, 50/60 Hz, Three-Phase[3]	0.4	0.5	22F-RF6P0-AS	22F-RF6P0-AL
	0.75	1.0	22F-RF6P0-AS	22F-RF6P0-AL
	1.5	2.0	22F-RF6P0-AS	22F-RF6P0-AL
	2.2	3.0	22F-RF012-BS	22F-RF012-BL
	3.7	5.0	22F-RF012-BS	22F-RF012-BL
	5.5	7.5	22F-RF026-CS	22F-RF026-CL
	7.5	10	22F-RF026-CS	22F-RF026-CL
	11	15	22F-RF026-CS	22F-RF026-CL

(1) EMC Filters not available at time of publication, verify availability before ordering.
(2) This filter is suitable for use with a cable length of up to 5 meters for Class A and 1 meter for Class B environments.
(3) Drives are available in these ratings with internal "S Type" filters.
(4) This filter is suitable for use with a cable length of up to 100 meters for Class A and 25 meters for Class B environments.

Installation Considerations

Control Wiring

- The control logic is 24V DC and can be set for either Sink or Source control via a DIP switch setting.
- Control terminal screws are sized for a conventional blade screwdriver.
- I/O Terminals 1, 2, and 3 are dedicated for Stop, Start, and Reverse operation respectively. These I/O Terminals can be programmed for 2- or 3-Wire operation to meet application requirements.
- I/O Terminals 4 and 5 are programmable and provide added flexibility. Programmable functions include:
  - Local Control
  - Preset Frequencies
  - Jog
  - RS-485 Control
  - Second Accel/Decel
  - Auxiliary Fault
  - Clear Fault
- Speed can be controlled via a 0...10V input or 4...20 mA input. Both are electrically isolated from the drive.
- One form C relay can be programmed to provide the status of a wide variety of drive conditions. The drive is shipped with a jumper installed between I/O Terminals 01 and 02...11 to allow out of box operation from the keypad.

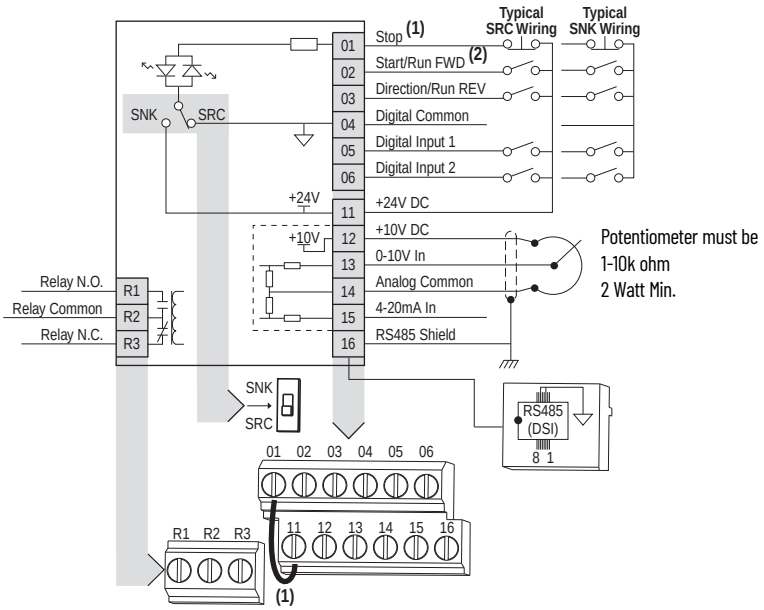

Control Wiring

No.	Signal	Default	Description	Param.
R1	Relay N.O.	Fault	Normally open contact for output relay.	t221
R2	Relay Common	–	Common for output relay.	
R3	Relay N.C.	Fault	Normally closed contact for output relay.	t221
Sink/source DIP switch		Source (SRC)	Inputs can be wired as Sink (SNK) or Source (SRC) via DIP switch setting.	
01	Stop(1)	Coast	The factory-installed jumper or a normally closed input must be present for the drive to start.	P106(1)
02	Start/Run FWD(2)	Not Active	Command comes from the integral keypad by default. To disable reverse operation, see A095 [Reverse Disable].	P106, P107
03	Direction/Run REV	Not Active		P106, P107, A434
04	Digital Common	–	For digital inputs. Electronically isolated with digital inputs from analog I/O.	

Control Wiring (Continued)

No.	Signal	Default	Description	Param.
05	Digital Input 1	Preset Freq	Program with t201 [Digital In1 Sel].	t201
06	Digital Input 2	Preset Freq	Program with t202 [Digital In2 Sel].	t202
11	+24V DC	–	Drive supplied power for digital inputs. Maximum output current is 100 mA.	-
12	+10V DC	–	Drive supplied power for 0...10V external potentiometer. Maximum output current is 15 mA.	P108
13	0...10V In(3)	Not Active	For external 0...10V input supply (input impedance = 100k ohm) or potentiometer wiper.	P108
14	Analog Common	–	For 0...10V In or 4...20 mA In. Electronically isolated with analog inputs from digital I/O.	-
15	4...20 mA In(3)	Not Active	For external 4...20mA input supply (input impedance = 250 ohm).	P108
16	RS-485 (DSI) Shield	–	Terminal should be connected to safety ground - PE when using the RS-485 (DSI) communications port.	-

(1) Stop
(2) Start/Run FWD
(3) Only one analog frequency source may be connected at a time. If multiple reference is connected at the same time, an undetermined frequency reference will result

Specifications

Drive Ratings

Catalog Number	Output Ratings		Input Ratings			Branch Circuit Protection			
	kW (Hp)	Amps	Voltage Range	kVA	Amps	Fuses	140M Motor Protectors(1) (2)	Contactors	Min Enclosure Volume(3) (in.3)
100 - 120V AC (±10%) – 1-Phase Input, 0 - 230V 3-Phase Output									
22F-V1P6N103	0.2 (0.25)	1.6	90...126	0.8	6.4	10	140M-C2E-C10	100-C09	1655
22F-V2P5N103	0.4 (0.5)	2.5	90...126	1.1	9.0	15	140M-C2E-C16	100-C12	1655
22F-V4P5N103	0.75 (1.0)	4.5	90...126	2.2	18.0	30	140M-D8E-C20	100-C23	1655
22F-V6P0N103	1.1 (1.5)	6.0	90...126	2.9	24.0	40	140M-F8E-C32	100-C30	1655
200 - 240V AC (±10%) – 1-Phase Input, 0 - 230V 3-Phase Output									
22F-A1P6N103	0.2 (0.25)	1.6	180...265	0.7	5.3	10	140M-C2E-B63	100-C09	1655
22F-A2P5N103	0.4 (0.5)	2.5	180...265	1.6	6.5	10	140M-C2E-C10	100-C09	1655
22F-A4P2N103	0.75 (1.0)	4.2	180...265	2.0	8.2	15	140M-C2E-C16	100-C12	1655
22F-A8P0N103	1.5 (2.0)	8.0	180...265	5.4	22.3	35	140M-D8E-C25	100-C23	1655
22F-A011N103	2.2 (3.0)	11.0	180...265	5.9	24.3	40	140M-F8E-C32	100-C30	1655
200 - 240V AC (±10%) – 1-Phase Input, 0 - 230V 3-Phase Output, with Filter									
22F-A1P6N113	0.2 (0.25)	1.6	180...265	1.3	5.3	10	140M-C2E-B63	100-C09	1655
22F-A2P5N113	0.4 (0.5)	2.5	180...265	1.6	6.5	10	140M-C2E-C10	100-C09	1655
22F-A4P2N113	0.75 (1.0)	4.2	180...265	2.0	8.2	15	140M-C2E-C16	100-C12	1655
22F-A8P0N113	1.5 (2.0)	8.0	180...265	5.4	22.3	35	140M-D8E-C25	100-C23	1655
22F-A011N113	2.2 (3.0)	11.0	180...265	5.9	24.3	40	140M-F8E-C32	100-C30	1655
200 - 240V AC (±10%) – 3-Phase Input, 0 - 230V 3-Phase Output									
22F-B1P6N103	0.2 (0.25)	1.6	180...265	0.8	1.9	3	140M-C2E-B25	100-C09	1655
22F-B2P5N103	0.4 (0.5)	2.5	180...265	1.2	2.7	6	140M-C2E-B40	100-C09	1655
22F-B4P2N103	0.75 (1.0)	4.2	180...265	2.1	4.9	10	140M-C2E-B63	100-C09	1655
22F-B8P0N103	1.5 (2.0)	8.0	180...265	4.0	9.5	15	140M-C2E-C16	100-C12	1655
22F-B012N103	2.2 (3.0)	12.0	180...265	6.3	15.0	25	140M-C2E-C20	100-C23	1655
22F-B017N103	3.7 (5.0)	17.5	180...265	8.8	21.1	35	140M-F8E-C25	100-C23	1655
22F-B025N104(4)	5.5 (7.5)	25.0	180...265	11.4	27.2	45	140M-F8E-C32	100-C37	3441
22F-B033N104(4)	7.5 (10.0)	33.0	180...265	16.1	38.5	60	140M-F8E-C45	100-C60	3441
380 - 480V AC (±10%) – 3-Phase Input, 0 - 460V 3-Phase Output									
22F-D1P5N103	0.4 (0.5)	1.5	340...528	1.5	1.8	3	140M-C2E-B25	100-C09	1655

Drive Ratings (Continued)

22F-D2P5N103	0.75 (1.0)	2.5	340...528	3.0	3.5	6	140M-C2E-B40	100-C09	1655
22F-D4P2N103	1.5 (2.0)	4.2	340...528	5.0	6.0	10	140M-C2E-C10	100-C09	1655
22F-D6P0N103	2.2 (3.0)	6.0	340...528	5.2	6.2	10	140M-C2E-C10	100-C09	1655
22F-D8P7N103	3.7 (5.0)	8.7	340...528	7.0	8.3	15	140M-C2E-C16	100-C12	1655
22F-D013N104(4)	5.5 (7.5)	13.0	340...528	12.9	15.4	25	140M-D8E-C20	100-C23	3441
22F-D018N104(4)	7.5 (10.0)	18.0	340...528	16.3	19.5	30	140M-F8E-C25	100-C23	3441
22F-D024N104(1)	11.0 (15.0)	24.0	340...528	21.7	26.1	40	140M-F8E-C32	100-C30	3441
380 - 480V AC (±10%) - 3-Phase Input, 0 - 460V 3-Phase Output, with Filter									
22F-D1P5N113	0.4 (0.5)	1.5	340...528	1.5	1.8	3	140M-C2E-B25	100-C09	1655
22F-D2P5N113	0.75 (1.0)	2.5	340...528	3.0	3.5	6	140M-C2E-B40	100-C09	1655
22F-D4P2N113	1.5 (2.0)	4.2	340...528	5.0	6.0	10	140M-C2E-C10	100-C09	1655
22F-D6P0N113	2.2 (3.0)	6.0	340...528	5.2	6.2	10	140M-C2E-C10	100-C09	1655
22F-D8P7N113	3.7 (5.0)	8.7	340...528	7.0	8.3	15	140M-C2E-C16	100-C12	1655
22F-D013N114(1)	5.5 (7.5)	13.0	340...528	12.9	15.4	25	140M-D8E-C20	100-C23	3441
22F-D018N114(1)	7.5 (10.0)	18.0	340...528	16.3	19.5	30	140M-F8E-C25	100-C23	3441
22F-D024N114(1)	11.0 (15.0)	24.0	340...528	21.7	26.1	40	140M-F8E-C32	100-C30	3441

(1) The AIC ratings of the Bulletin 140M Motor Protector Circuit Breakers may vary. See the Use of Motor Protection Circuit Breakers with Variable-Frequency Drives Application Techniques, publication 140M-AT002.
(2) Manual Self-Protected (Type E) Combination Motor Controller, UL Listed for 208 Wye or Delta, 240 Wye or Delta, 480Y/277 or 600Y/347. Not UL Listed for use on 480V or 600V Delta/Delta, corner ground, or high-resistance ground systems.
(3) When using a Manual Self-Protected (Type E) Combination Motor Controller, the drive must be installed in a ventilated or non-ventilated enclosure with the minimum volume specified in this column. Application specific thermal considerations may require a larger enclosure.
(4) Catalog suffix ending with '4', such as N104 and N114, indicate that an internal brake IGBT is supplied.

Input/Output Ratings

		Approvals
Output Frequency: 0...400 Hz (Programmable) *Efficiency:* 97.5% (Typical)		UL508C CSA 22.2 CE
SRC (Source) Mode: 18...24V = ON 0...6V = OFF	SNK (Sink) Mode: 0...6V = ON 18...24V = OFF	*4...20 mA Analog:* 250 ohm input impedance *0...10V DC Analog:* 100k ohm input impedance *External Pot:* 1...10k ohms, 2 W min
Resistive Rating: 3.0 A at 30V DC, 125V AC, and 240V AC *Inductive Rating:* 0.5 A at 30V DC, 125V AC, and 240V AC		
Fuse: UL Class J, RK1, T, or Type BS88; 600V (550V) or equivalent. *Circuit Breakers:* HMCP or Bulletin 140M or equivalent.		
Motor Protection: I^2t overload protection - 150% for 60 s, 200% for 3 s (Provides Class 10 protection)		
Overcurrent: 200% hardware limit, 300% instantaneous fault		
Over Voltage: 100...120V AC Input – Trip occurs at 405V DC bus voltage (equivalent to 150V AC incoming line) 200...240V AC Input – Trip occurs at 405V DC bus voltage (equivalent to 290V AC incoming line) 380...460V AC Input – Trip occurs at 810V DC bus voltage (equivalent to 575V AC incoming line)		
Under Voltage: 100...120V AC Input – Trip occurs at 210V DC bus voltage (equivalent to 75V AC incoming line) 200...240V AC Input – Trip occurs at 210V DC bus voltage (equivalent to 150V AC incoming line) 380...480V AC Input – Trip occurs at 390V DC bus voltage (equivalent to 275V AC incoming line)		
Control ride-through: Minimum ride-through is 0.5 s - typical value 2 s		
Faultless Power ride-through: 100 ms		
Internal brake IGBT included with power ratings 5.5 kW (7.5 Hp) and 7.5 kW (10.0 Hp) for 240V, 3-phase drives, and 5.5 kW (7.5 Hp), 7.5 kW (10.0 Hp) and 11.0 kW (15.0 Hp) for 480V, 3-phase drives. See the PowerFlex 4M User Manual for ordering information, publication 22F-UM001.		

Specifications

Category	Specification	
Environment	Altitude:	1000 m (3300 ft) max without derating
	Maximum Surrounding Air Temperature without derating: IP20: IP20 zero stacking:	 –10...+50° C (14...122° F) –10...+40° C (14...104° F)
	Cooling Method Convection: Fan:	 120V, 1-Phase, 0.75 kW (1 Hp) and below 240V, 1-Phase, 0.4 kW (0.5 Hp) and below 240V, 3-Phase, 0.75 kW (1 Hp) and below 480V, 3-Phase, 0.75 kW (1 Hp) and below All other drive ratings.
	Storage Temperature:	–40...+85 degrees C (–40...+185 degrees F)
	Atmosphere:	**Important:** Drive **must not** be installed in an area where the ambient atmosphere contains volatile or corrosive gas, vapors, or dust. If the drive is not going to be installed for a period of time, it must be stored in an area where it will not be exposed to a corrosive atmosphere.
	Relative Humidity:	0...95% noncondensing
	Shock (operating):	15G peak for 11 ms duration (±1.0 ms)
	Vibration (operating):	1G peak, 5...2000 Hz
Control	Carrier Frequency	2...10 kHz. Drive rating based on 4 kHz.
	Frequency Accuracy Digital Input: Analog Input:	 Within ±0.05% of set output frequency. Within 0.5% of maximum output frequency.
	Speed Regulation - Open Loop with Slip Compensation:	±2% of base speed across a 40:1 speed range.
	Stop Modes:	Multiple programmable stop modes including - Ramp, Coast, DC-Brake, Ramp-to-Hold and S-curve.
	Acceleration/Deceleration:	Two independently programmable acceleration and deceleration times. Each time may be programmed from 0...600 s in 0.1 s increments.
	Intermittent Overload:	150% Overload capability for up to 1 min 200% Overload capability for up to 3 s
	Electronic Motor Overload Protection	Provides class 10 motor overload protection according to NEC article 430 and motor over temperature protection according to NEC article 430.126 (A) (2). UL 508C File 29572.

Parameter Cross Reference - by Name

Parameter Name	Number	Group	Parameter Name	Number	Group
Accel Time 1	P109	Basic Program	Flying Start En	A435	Advanced Program
Accel Time 2	A401	Advanced Program	Internal Freq	A409	Advanced Program
Analog In 0-10V	d020	Display	Jog Accel/Decel	A405	Advanced Program
Analog In 4-20mA	d021	Display	Jog Frequency	A404	Advanced Program
Anlg In 0-10V Hi	t212	Terminal Block	Language	C301	Communications
Anlg In 0-10V Lo	t211	Terminal Block	Maximum Freq	P105	Basic Program
Anlg In4-20mA Hi	t214	Terminal Block	Maximum Voltage	A457	Advanced Program
Anlg In4-20mA Lo	t213	Terminal Block	Minimum Freq	P104	Basic Program
Auto Rstrt Delay	A452	Advanced Program	Motor NP FLA	A461	Advanced Program
Auto Rstrt Tries	A451	Advanced Program	Motor NP Hertz	P102	Basic Program
Boost Select	A453	Advanced Program	Motor NP Volts	P101	Basic Program
Bus Reg Mode	A441	Advanced Program	Motor OL Current	P103	Basic Program
Comm Data Rate	C302	Communications	Motor OL Ret	P111	Basic Program
Comm Format	C306	Communications	Motor OL Select	A444	Advanced Program
Comm Loss Action	C304	Communications	Output Current	d003	Display
Comm Loss Time	C305	Communications	Output Freq	d001	Display
Comm Node Addr	C303	Communications	Output Voltage	d004	Display

Parameter Cross Reference - by Name (Continued)

Parameter Name	Number	Group	Parameter Name	Number	Group
Comm Status	d015	Display	Preset Freq 0	A410	Advanced Program
Comm Write Mode	C307	Communications	Preset Freq 1	A411	Advanced Program
Commanded Freq	d002	Display	Preset Freq 2	A412	Advanced Program
Compensation	A436	Advanced Program	Preset Freq 3	A413	Advanced Program
Contrl In Status	d013	Display	Process Display	d010	Display
Control Source	d012	Display	Process Factor	A440	Advanced Program
Control SW Ver	d016	Display	Process Time Hi	A439	Advanced Program
Current Limit	A441	Advanced Program	Process Time Lo	A438	Advanced Program
DB Duty Cycle	A428	Advanced Program	Program Lock	A458	Advanced Program
DB Resistor Sel	A427	Advanced Program	PWM Frequency	A446	Advanced Program
DC Brake Level	A425	Advanced Program	Relay Out Level	t222	Terminal Block
DC Brake Time	A424	Advanced Program	Relay Out Sel	t221	Terminal Block
DC Bus Voltage	d005	Display	Reset To Defalts	P112	Basic Program
Decel Time 1	P110	Basic Program	Reverse Disable	A434	Advanced Program
Decel Time 2	A402	Advanced Program	S-curve %	A403	Advanced Program
Dig In Status	d014	Display	Skip Freq Band	A419	Advanced Program
Digital In1 Sel	t201	Terminal Block	Skip Frequency	A418	Advanced Program
Digital In2 Sel	t202	Terminal Block	Slip Hertz @ FLA	A437	Advanced Program
Drive Status	d006	Display	Speed Reference	P108	Basic Program
Drive Temp	d022	Display	Start At power-up	A433	Advanced Program
Drive Type	d017	Display	Start Source	P106	Basic Program
Elapsed Run Time	d018	Display	Stop Mode	P107	Basic Program
Fault 1 Code	d007	Display	SW Current Trip	A448	Advanced Program
Fault 2 Code	d008	Display	Testpoint Data	d019	Display
Fault 3 Code	d009	Display	Testpoint Sel	A459	Advanced Program
Fault Clear	A450	Advanced Program			

Product Dimensions

PowerFlex 4M Panel Mount Drives

Ratings are in kW (Hp)

Frame	120V AC – 1-Phase	240V AC – 1-Phase	240V AC – 3-Phase	480V AC – 3-Phase
A	0.2 (0.25) 0.4 (0.5)	0.2 (0.25) 0.4 (0.5) 0.75 (1.0)	0.2 (0.25) 0.4 (0.5) 0.75 (1.0) 1.5 (2.0)	0.4 (0.5) 0.75 (1.0) 1.5 (2.0)
B	0.75 (1.0) 1.1 (1.5)	1.5 (2.0) 2.2 (3.0)	2.2 (3.0) 3.7 (5.0)	2.2 (3.0) 3.7 (5.0)
C	–	–	5.5 (7.5) 7.5 (10.0)	5.5 (7.5) 7.5 (10.0) 11.0 (15.0)

PowerFlex 4M Panel Mount Drives

Dimensions are in mm (in.). Weights are in kg (lb.).

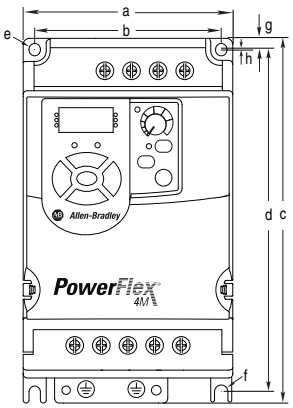

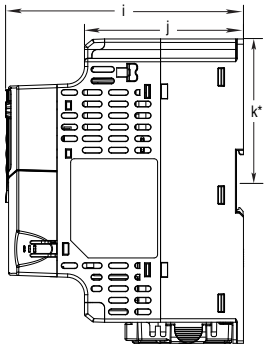

Note:
DIN rail mounting is not applicable to Frame C.

Frame	a	b	c	d	e	f	g	h	i	j	k	Shipping Weight
A	72.0 (2.83)	59.0 (2.32)	174.0 (6.85)	151.6 (5.97)	∅ 5.4 (0.21)	∅ 5.4 (0.21)	5.2 (0.20)	–	136.0 (5.35)	90.9 (3.58)	81.3 (3.20)	1.6 (3.5)
B	100 (3.94)	89.0 (3.50)	174.0 (6.85)	163.5 (6.44)	∅ 5.4 (0.21)	∅ 5.4 (0.21)	5.2 (0.20)	0.5 (0.02)	136.0 (5.35)	90.9 (3.58)	81.3 (3.20)	2.1 (4.6)
C	130.0 (5.12)	116.0 (4.57)	260.0 (10.24)	247.5 (9.74)	∅ 5.5 (0.22)	∅ 5.5 (0.22)	6.0 (0.24)	1.0 (0.04)	180.0 (7.09)	128.7 (5.07)	—	4.8 (10.6)

Dynamic Brake Modules

Dimensions are in mm (in.)

Frame B

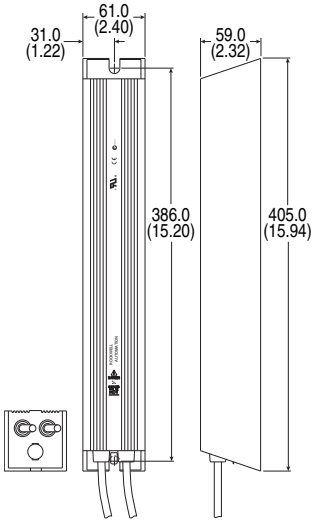

Frame	Catalog Number
B	AK-R2-030P1K2, AK-R2-120P1K2

Recommended External Brake Resistor Circuitry

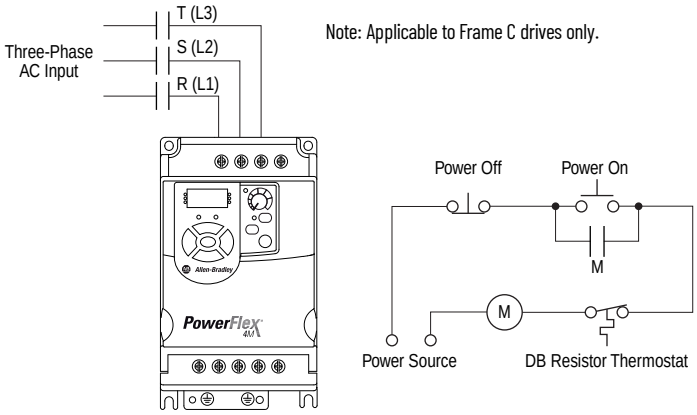

Note: Applicable to Frame C drives only.

Bulletin 1321-3R Series Line Reactors

Dimensions are in mm (in.). Weights are in kg (lb).

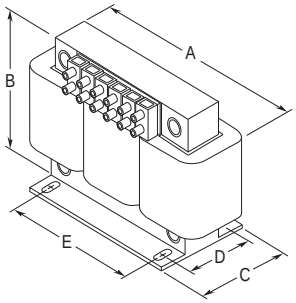

Catalog Number	A	B	C	D	E	Weight
1321-3R2-A	112 (4.40)	104 (4.10)	70 (2.75)	50 (1.98)	37 (1.44)	1.8 (4)
1321-3R2-B	112 (4.40)	104 (4.10)	70 (2.75)	50 (1.98)	37 (1.44)	1.8 (4)
1321-3R4-B	112 (4.40)	104 (4.10)	76 (3.00)	50 (1.98)	37 (1.44)	1.8 (4)
1321-3R4-C	112 (4.40)	104 (4.10)	86 (3.38)	60 (2.35)	37 (1.44)	2.3 (5)
1321-3R4-D	112 (4.40)	104 (4.10)	92 (3.62)	66 (2.60)	37 (1.44)	2.7 (6)
1321-3R8-A	152 (6.00)	127 (5.00)	76 (3.00)	53 (2.10)	51 (2.00)	3.1 (7)
1321-3R8-B	152 (6.00)	127 (5.00)	76 (3.00)	53 (2.10)	51 (2.00)	3.6 (8)
1321-3R8-C	152 (6.00)	127 (5.00)	85 (3.35)	63 (2.48)	51 (2.00)	4.9 (11)
1321-3R12-A	152 (6.00)	127 (5.00)	76 (3.00)	53 (2.10)	51 (2.00)	4.1 (9)
1321-3R12-B	152 (6.00)	127 (5.00)	76 (3.00)	53 (2.10)	51 (2.00)	4.5 (10)
1321-3R18-A	152 (6.00)	133 (5.25)	79 (3.10)	54 (2.13)	51 (2.00)	4.1 (9)
1321-3R18-B	152 (6.00)	135 (5.30)	89 (3.50)	63 (2.48)	51 (2.00)	5.5 (12)
1321-3R25-A	183 (7.20)	146 (5.76)	85 (3.35)	60 (2.35)	76 (3.00)	4.9 (11)
1321-3R25-B	183 (7.20)	147 (5.80)	89 (3.50)	60 (2.35)	76 (3.00)	6.4 (14)
1321-3R35-A	193 (7.60)	146 (5.76)	91 (3.60)	66 (2.60)	76 (3.00)	6.3 (14)

Frame A EMC Line Filters

Catalog Numbers: 22F-RF010-AL; 22F-RF9P5-AS, 22F-RF9P5-AL; 22F-RF6P0-AS, 22F-RF6P0-AL

Dimensions are in mm (in.)

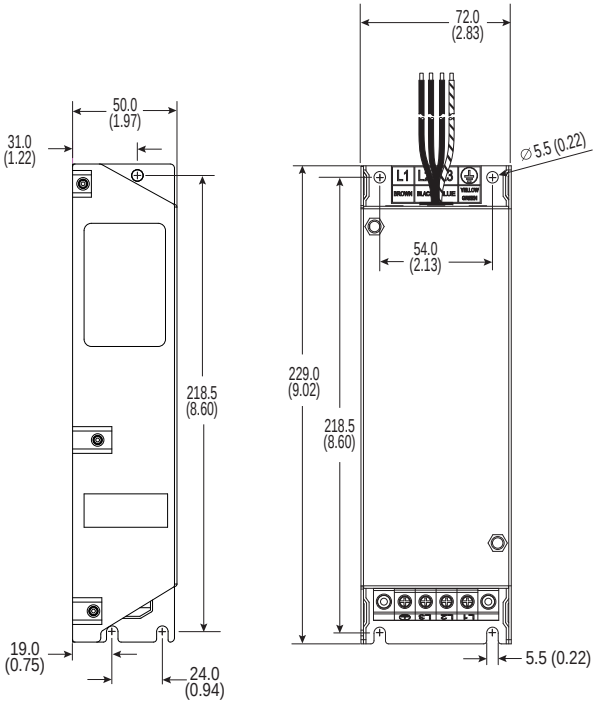

Frame B EMC Line Filters

Catalog Numbers: 22F-RF018-BL; 22F-RF025-BL; 22F-RF021-BS, 22F-RF021-BL; 22F-RF012-BS, 22F-RF012-BL

Dimensions are in mm (in.)

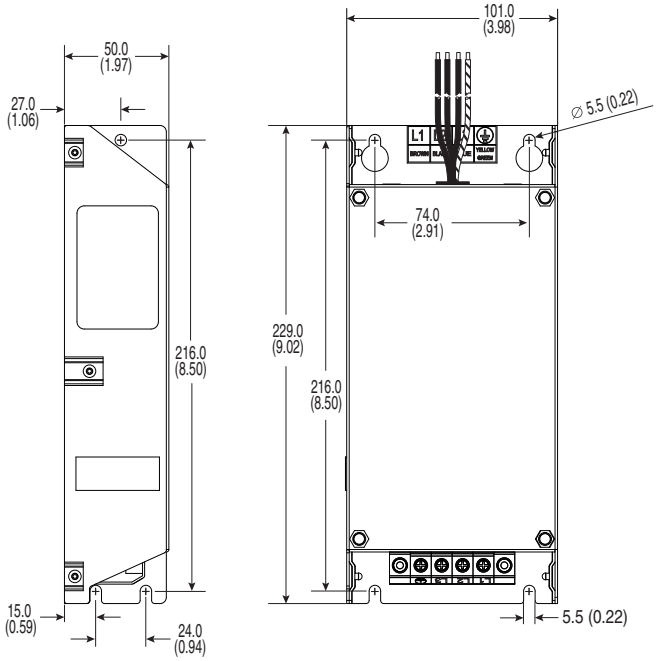

Frame C EMC Line Filters

Catalog Numbers: 22F-RF039-CS, 22F-RF039-CL; 22F-RF026-CS, 22F-RF026-CL

Dimensions are in mm (in.)

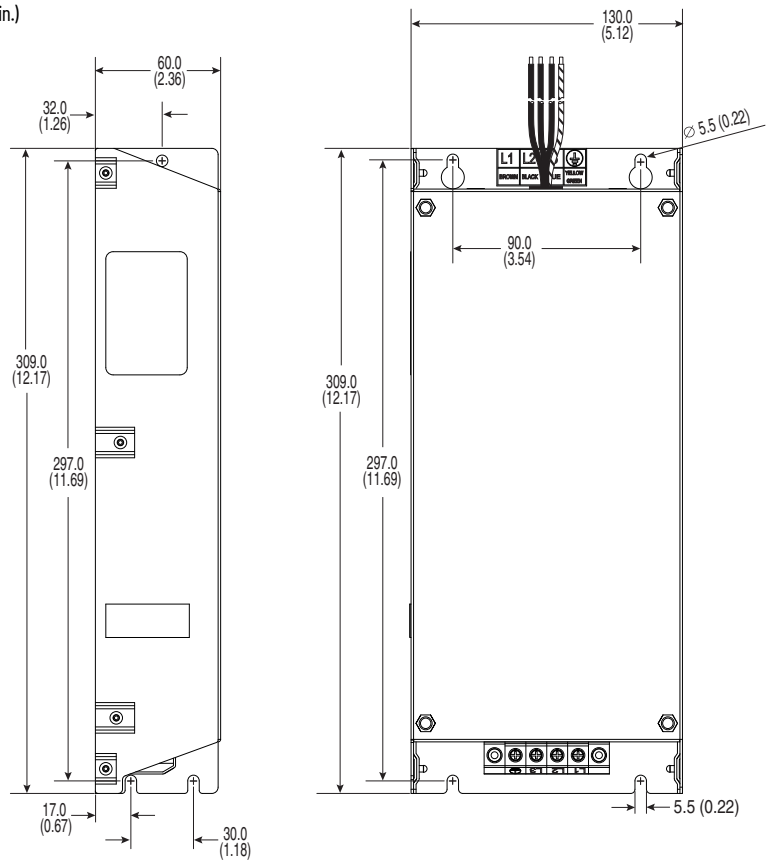

Rockwell Automation Support

Use these resources to access support information.

Technical Support Center	Find help with how-to videos, FAQs, chat, user forums, and product notification updates.	rok.auto/support
Knowledgebase	Access Knowledgebase articles.	rok.auto/knowledgebase
Local Technical Support Phone Numbers	Locate the telephone number for your country.	rok.auto/phonesupport
Literature Library	Find installation instructions, manuals, brochures, and technical data publications.	rok.auto/literature
Product Compatibility and Download Center (PCDC)	Download firmware, associated files (such as AOP, EDS, and DTM), and access product release notes.	rok.auto/pcdc

Documentation Feedback

Your comments help us serve your documentation needs better. If you have any suggestions on how to improve our content, complete the form at rok.auto/docfeedback.

Waste Electrical and Electronic Equipment (WEEE)

At the end of life, this equipment should be collected separately from any unsorted municipal waste.

Rockwell Automation maintains current product environmental compliance information on its website at rok.auto/pec.

Allen-Bradley, Compact I/O, Connected Components Workbench, ControlLogix, expanding human possibility, FactoryTalk, MicroLogix, PanelView, PowerFlex, Rockwell Automation, SLC, and TechConnect are trademarks of Rockwell Automation, Inc.

ControlNet, DeviceNet, and EtherNet/IP are trademarks of ODVA, Inc.

Windows is a trademark of Microsoft Corporation.

Trademarks not belonging to Rockwell Automation are property of their respective companies.

Rockwell Otomasyon Ticaret A.Ş. Kar Plaza İş Merkezi E Blok Kat:6 34752, İçerenköy, İstanbul, Tel: +90 (216) 5698400 EEE Yönetmeliğine Uygundur

Connect with us.

rockwellautomation.com — expanding **human possibility**™

AMERICAS: Rockwell Automation, 1201 South Second Street, Milwaukee, WI 53204-2496 USA, Tel: (1) 414.382.2000, Fax: (1) 414.382.4444
EUROPE/MIDDLE EAST/AFRICA: Rockwell Automation NV, Pegasus Park, De Kleetlaan 12a, 1831 Diegem, Belgium, Tel: (32) 2 663 0600, Fax: (32) 2 663 0640
ASIA PACIFIC: Rockwell Automation, Level 14, Core F, Cyberport 3, 100 Cyberport Road, Hong Kong, Tel: (852) 2887 4788, Fax: (852) 2508 1846

Publication 22F-TD001C-EN-P - April 2021
Supersedes Publication 22F-TD001B-EN-P - June 2013

Copyright © 2021 Rockwell Automation, Inc. All rights reserved.