Installation Instructions—PHOTOSWITCH® Series 5000 Blue Line with Analog Output

Photo Head	Retroreflective		Standard Diffuse	Fixed Focus	Wide Angle	Fiber Optic Infrared Glass	Fiber Optic Visible Red Plastic
Catalog Number	42DRU-5400		42DRP-5400	42DRA-5400-FF ❶ 42DRF-5400-FF	42DRA-5400-WA ❶ 42DRF-5400-WA	42DRA-5400-FO ❶ 42DRF-5400-FO	
Sensing Distance	4.6m (15ft) total 4.0m (13ft) linear		1.5m (5ft) total 1.2m (4ft) linear	(IR) 127mm (5in) max peak @ 3in (VR) 101.6mm (4in) max peak @ 2in	(IR) 508mm (20in) (VR) 177.8mm (7in)	Depends on fiber optic cable	
Transmitting LED	Infrared 880nm		Infrared 880nm	(42DRA) Infrared 880nm (42DRF) Visible Red 660nm		Infrared 880nm	Visible Red 660nm
Indicators	Red: Setpoint A; Green: Setpoint B						
Field of View	3°		3°	—	—	Depends on fiber optic cable selected	
Sensitivity Adjustment	Yes						
Operating Temperature	-40°C to +65°C (-40°F to +150°F)						
Relative Humidity	90% maximum						
Housing/Lens Material	Valox®/Acrylic		Valox®/Acrylic				
Cover Gasket Material	Nitrile						
Operating Environment	NEMA 3, 4, 12, 13, and IP66 (IEC 529), corrosion resistant, high-impact housing						
Approvals	UL listed, CSA certified (except cable style power base), and CE marked for all applicable directives						
Protections	Output short-circuit (analog only)						
Vibration	10-55 Hz, 1 mm amplitude, Meets or exceeds IEC 947-5-2						
Shock	30G, Meets or exceeds IEC 947-5-2						
Supply Voltage/Current	22-28V DC/70mA max						
Output Type	Analog 1-20mA current or 1-10V DC voltage (selectable negative or positive slope) (2) NPN setpoints (selectable)						
Output Load	900Ω (analog current); 3KΩ minimum (analog voltage); 28V DC, 100mA (setpoints)						
Load Current	100mA						
Leakage Current	10μA max.						
Response Time	100ms (time required for analog swing)						
Photo Base							
Screw Terminal (nickel-plated brass pressure type terminal #6-32	42DTB-5000						
3m Cable (5 conductor flexible PVC jacketed cable 3m (10ft))	42DCB-5000						

❶ Sensing modes may be field configurable by selecting either the 42DRA-5400 or 42DRF-5400 photohead and one of the following lens assemblies: 61-5551 for fixed focus sensing mode, 61-5511 for wide angle diffuse sensing mode.

Wiring Diagrams

Analog Current Output Connections

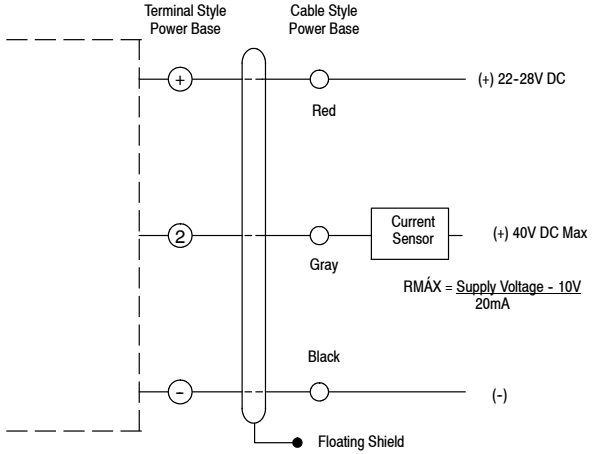

Analog Voltage Output Connections

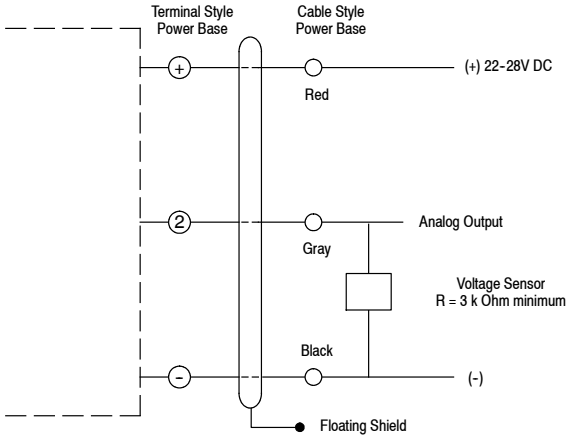

NPN Set Point Output Connections

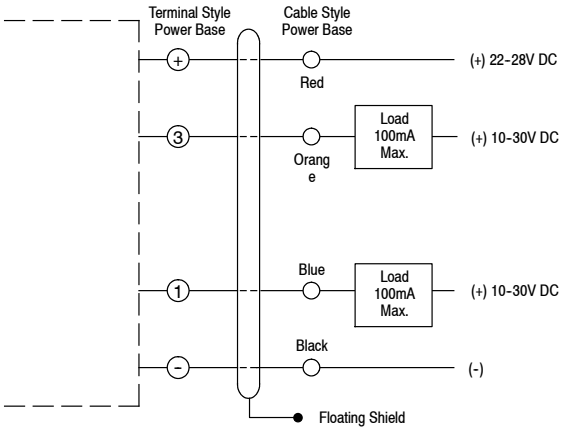

Note: Details of connection of Allen-Bradley Series 5000 photoelectric sensors to Allen-Bradley Programmable Controllers can be found in Publication 42MR-4.0.

Calibration of the Analog Output is done with a Voltmeter or an Ammeter. When calibrating the Voltage Output, connect the Voltmeter between Terminal 2 (+) and the negative power supply Terminal 1 (-). Select the Voltmeter Scale for 10V DC. When calibrating the Current Output, install the Ammeter between Terminal 2 (-) and the positive power supply Terminal (+), or the positive of a separate power supply when used. Select the Ammeter scale for 20mA (DC).

1. With Selector Switches 1 and 2, select Analog Current or Voltage Output.
2. With Selector Switches 3 and 4, select Positive or Negative Slope operation.
3. Set retroreflective target at 0.61m (2ft). Adjust the Analog Output Calibration pot. for 10V DC or 20mA (±2%) when in Negative Slope operation, or to 1V DC or 1mA (±10%) when in Positive Slope operation.
4. Set the retroreflective target at the desired range. 4.57m (15ft) maximum, 1.52m (5ft) minimum. Adjust the Sensing Range Adjustment pot. for 1V DC or 1mA (±10%) when using Negative Slope operation or to 10V DC or 20mA (±2%) when using Positive Slope operation.
5. Bring the retroreflective target back to 0.61m (2ft). Re-adjust the Analog Output Calibration pot. for 10V DC or 20mA (±2%) when using Negative Slope operation or to 1V DC or 1mA when using Positive Slope operation if necessary.
6. Place the retroreflective target at the desired range. Re-adjust the Sensing Range Adjustment pot. for 1V DC or 1mA (±10%) when using Negative Slope operation or to 10V DC or 20mA (±2%) when using Positive Slope operation if necessary.

The Analog Output is now calibrated.

Calibration of Setpoint Outputs

1. Place the retroreflective target at the distance where the Setpoint Output A is to come on.
2. Adjust the Setpoint pot. A to turn on Output A at this point. (Red LED turns on.)
3. Place the retroreflective target at the distance where the Setpoint Output B is to come on.
4. Adjust the Setpoint B to turn on Output B at this point. (Green LED turns on.)

Note: Be aware that in the retroreflective mode, when setting the range beyond 3.35m (11ft), white paper response may occur between 2.54cm (1in) and 0.3m (1ft).
This completes the calibration of Setpoint Outputs.

Typical Response Curves—mm (inches)

Retroreflective Sensing Mode

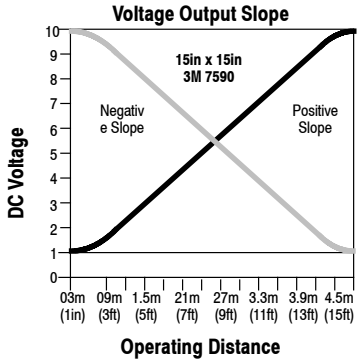

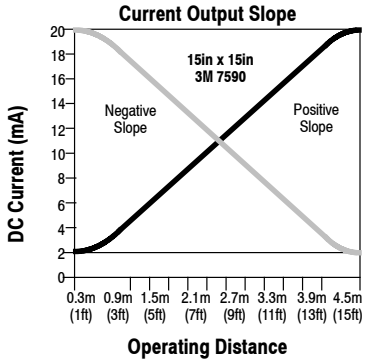

Diffuse Sensing Mode

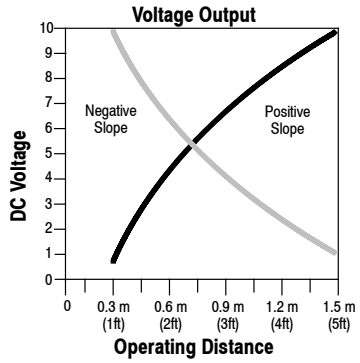

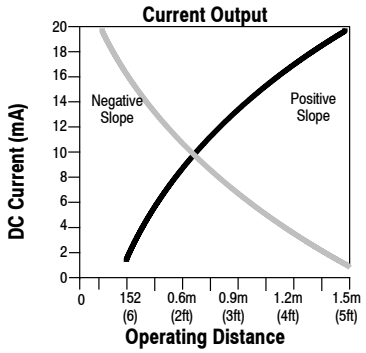

Infrared Glass FO/Fixed Focus/Wide Angle Diffuse ❶

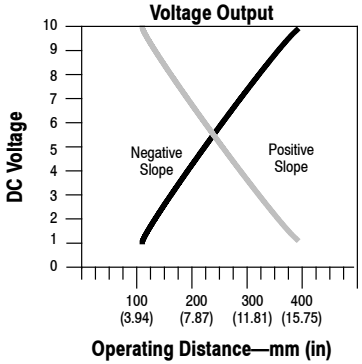

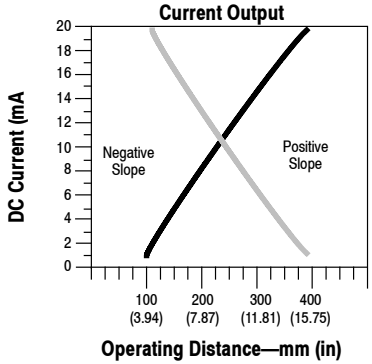

Visible Red FO/Fixed Focus/Wide Angle Diffuse ❶

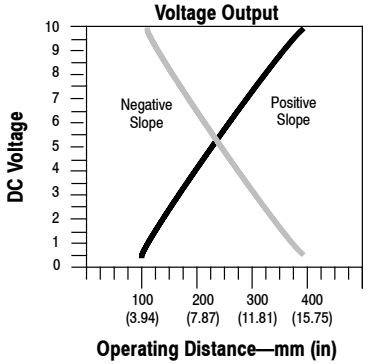

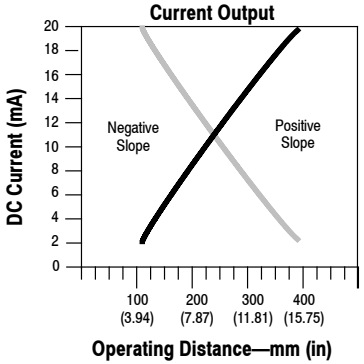

❶ Curves shown represent output current/voltage when using sensor with 43GR-BAA72.L large aperture glass fiber optic cable to a 92-47 1.25in diameter reflector.

Dimensions—mm (inches)

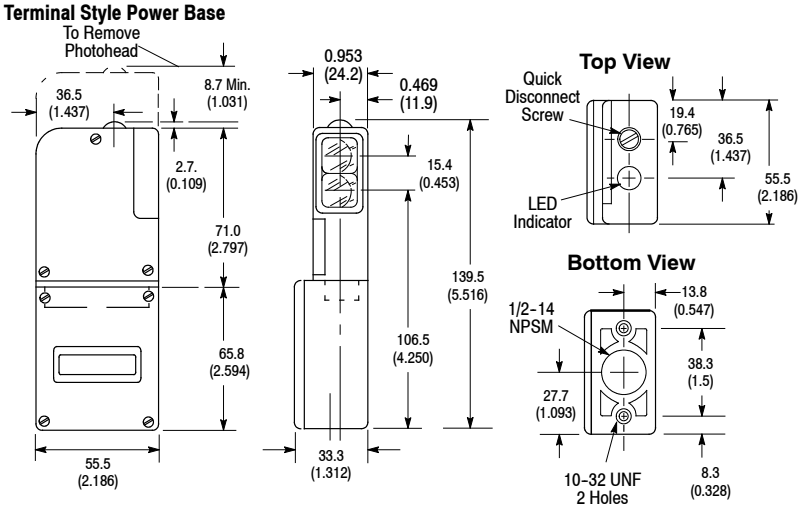

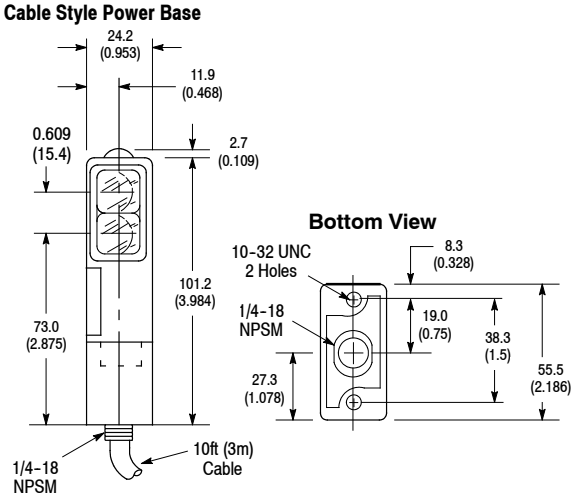

Note: Hardware included with sensor: two (2) nickel plated 10-32 mounting screws.

Accessories—mm (inches) (continued)

General Purpose Mounting Assembly #60-1785

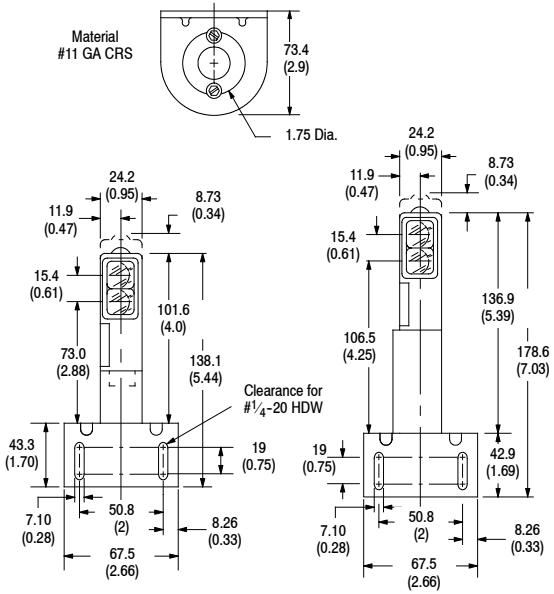

Control with Cable Style Power Base **Control with Terminal Style Power Base**

Heavy Duty Mounting Assembly #60-1748

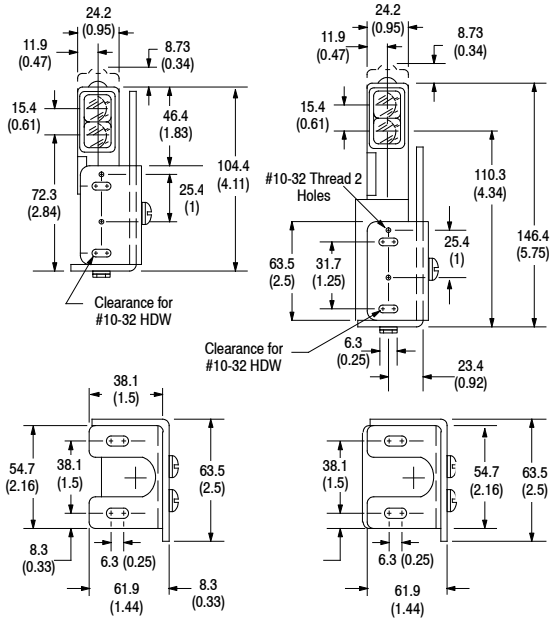

Control with Cable Style Power Base **Control with Terminal Style Power Base**

Flexi Mounting Assembly #60-2014

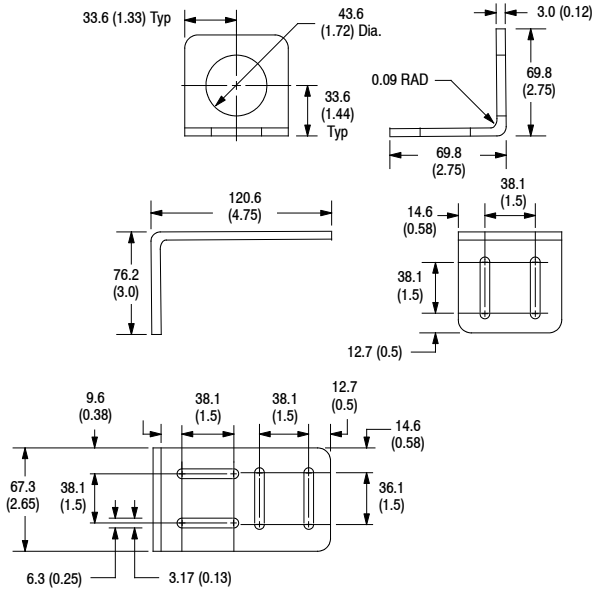
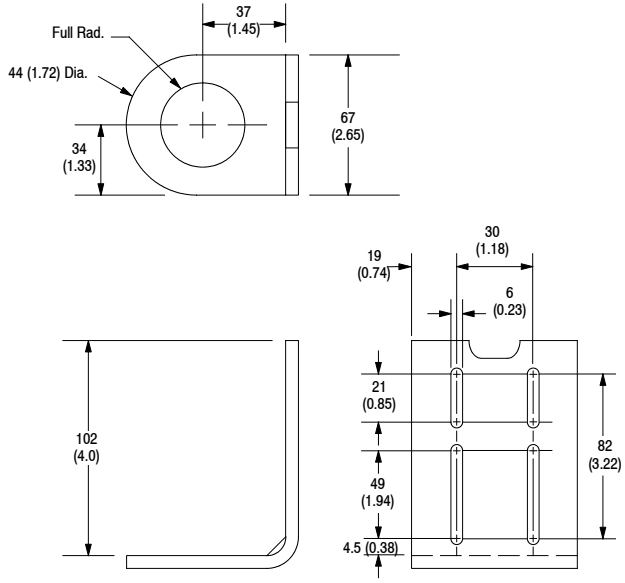
Limit Switch Mounting Assembly #60-2230