Technical Data

Allen-Bradley

Mechanically-Held Lighting Contactor Specifications

Bulletin Number 500LC

Topic	Page
Specifications	2
Approximate Dimensions	2…4

Additional Resources

These documents contain additional information concerning related products from Rockwell Automation.

Resource	Description
Industrial Automation Wiring and Grounding Guidelines, publication 1770-4.1	Provides general guidelines for installing a Rockwell Automation industrial system.
Product Certifications website, http://www.ab.com	Provides declarations of conformity, certificates, and other certification details.

You can view or download publications at http://www.rockwellautomation.com/literature/. To order paper copies of technical documentation, contact your local Allen-Bradley distributor or Rockwell Automation sales representative.

Specifications

- **Electrical Life**
  - N.O. lighting contactors: 6000 operations (at full load)
  - N.O. & N.C. lighting contactors: 6000 operations (at full load)
- **Mechanical Life**
  - N.O. lighting contactors: 50 000 operations
  - N.O. & N.C. lighting contactors: 6000 operations

Inrush Current/Minimum Control Line Fuse♣∆

Amps	Inrush Current and Fuse Size [Amps rms] at AC Control Voltage		
	120V	240V	277V
Inrush	5.0	2.5	2.2
Fuse	2.0	1.0	1.0

♣ The minimum permissable control circuit fuse size is based on the operating coil's momentary inrush current.

∆ Overcurrent protective device ratings for control circuits should be selected in accordance with applicable electrical codes.

Maximum AC Voltage and Amp. Ratings For Bulletin 500LC Main Contacts (Open or Closed)

Load Type	Amperes Continuous [A]	Poles to Load	
		1 for 1-Phase	2 for 1-Phase 3 for 3-Phase
Tungsten	20	250V AC	250V AC
Ballast	20	347V AC	600V AC
General	30	347V AC	600V AC

Maximum DC Voltage and Amp. Ratings For Bulletin 500LC Main Contacts (Open or Closed)

Load Type	Amperes Continuous [A]	Poles to Load	
		2 in Series	3 in Series
General	20	125V DC	250V DC

Withstand Current Rating

Available Symmetrical Amperes RMS		
	When Used with Molded-Case Circuit Breakers contained in UL67 listed panelboards	
At AC Service Voltage	Withstand Current Rating [A]	Maximum Breaker Size [A]
250V	22 000	30
480V	14 000	30
600V	10 000	30

Control Line Run

Wire Size [AWG]	Maximum Distance [ft] at AC Control Voltage		
	120V	240V	277V
14	700	2000	2600
12	1050	3100	4100
10	1670	5000	6600

Ratings for Control Modules

Control Voltage Range: 80…125% of nominal

Ambient Temperature Range (Operate): –40…+60 °C (–40…+140 °F)

Ambient Temperature Range (Storage): –40…+60 °C (–40…+140 °F)

Control Module	Cat. No. 500LC–47CM*		Cat. No. 500LC–48CM*		Cat. No. 500LC–49SS*	
	AC	DC	AC	DC	AC	DC
12V AC/DC	0.60	0.32	0.34	0.36	0.68	0.70
24V AC/DC	0.85	0.36	0.34	0.38	0.70	0.72
120V AC	1.90	—	1.60	—	3.70	—
240/277V AC	4.00	—	2.50	—	6.00	—

Approximate Dimensions

Dimensions are shown in inches (mm). Dimensions are not intended for manufacturing purposes.

Open Type Dimensions

2…6 Poles
with Field-Installed Modifications

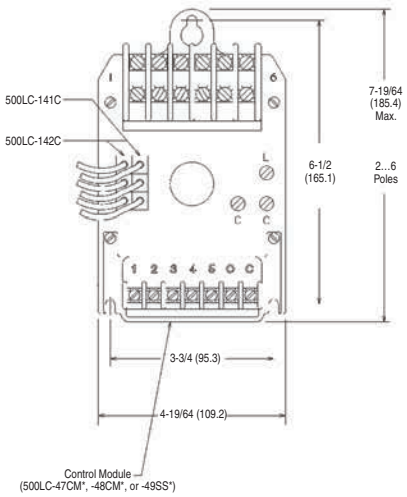

8…12 Poles
with Field-Installed Modifications

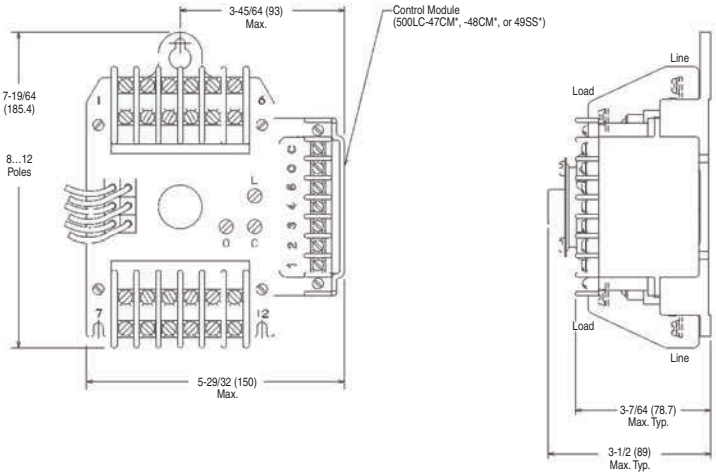

Dimensions are shown in inches (mm). Dimensions are not intended for manufacturing purposes.

Type 3R, Surface Mount 4/4X (Stainless Steel), and 12 Enclosure

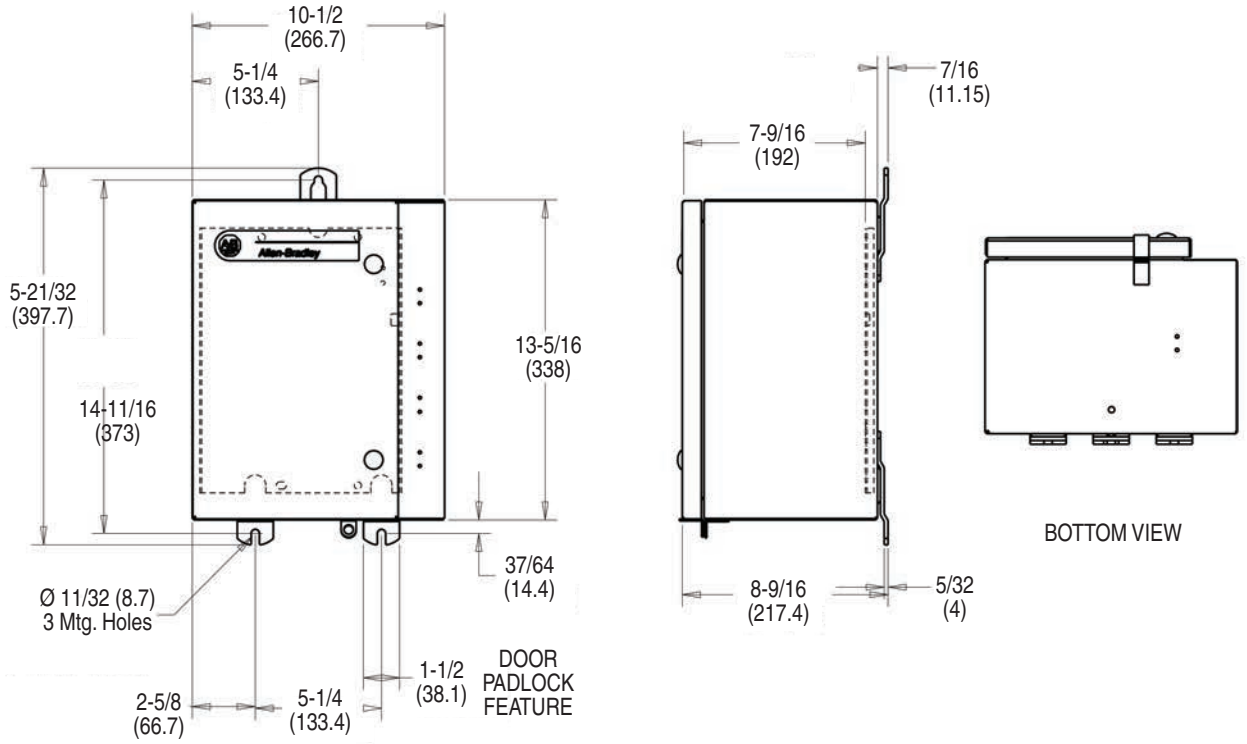

Type 1 Enclosure

Approximate Shipping Weights§

Poles	Open	Enclosed
2…6	2 lbs. (0.91 kg)	9 lbs. (4.08 kg)
8…12	2.7 lbs. (1.2 kg)	9.7 lbs. (4.4 kg)
2…6 (with Acc. 47, 48, or 49)	2.3 lbs. (1.05 kg)	9.3 lbs. (4.22 kg)
8…12 (with Acc. 47, 48, or 49)	3.0 lbs. (1.36 kg)	10.0 lbs (4.54 kg)

§ Not including shipping carton.

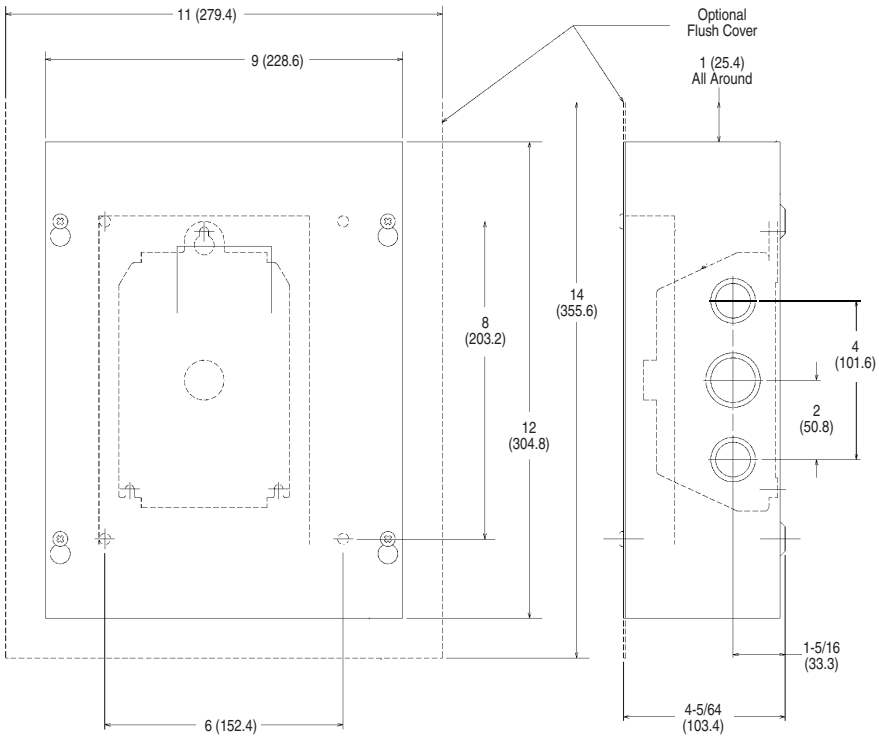

Dimensions are shown in inches (mm). Dimensions are not intended for manufacturing purposes.

Enclosed Panels

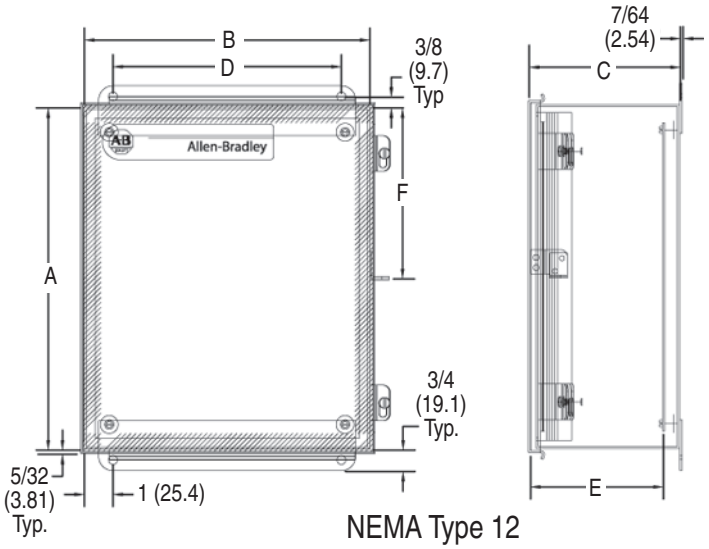

NEMA Type 12

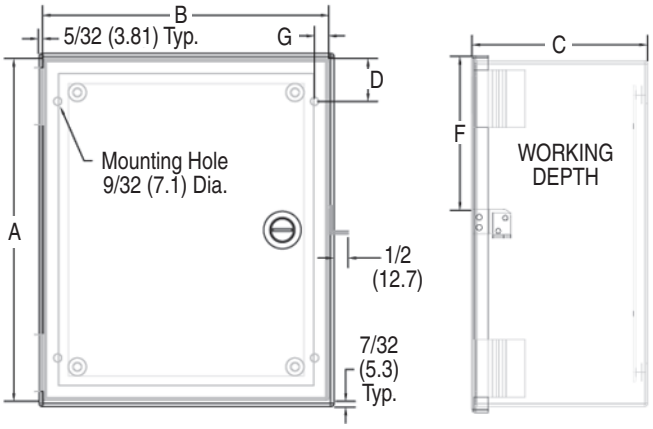

NEMA Type 1

NEMA Type	Cat. No.	Approximate Dimensions in Inches (mm)						
		A (Height)	B (Width)	C (Depth)	D	E (Working Depth)	F (Hasp)	G
12	598-DF14126	14 (355.6)	12 (304.8)	6.27 (159.3)	10 (254.0)	5.53 (140.5)	7.06 (179.3)	—
1	598-DA14126	14 (355.6)	12 (304.8)	6.08 (154.4)	1.50 (38.1)	5.5 (139.7)	6.24 (158.5)	0.50 (12.7)

Important User Information

Read this document and the documents listed in the additional resources section about installation, configuration, and operation of this equipment before you install, configure, operate, or maintain this product. Users are required to familiarize themselves with installation and wiring instructions in addition to requirements of all applicable codes, laws, and standards.

Activities including installation, adjustments, putting into service, use, assembly, disassembly, and maintenance are required to be carried out by suitably trained personnel in accordance with applicable code of practice.

If this equipment is used in a manner not specified by the manufacturer, the protection provided by the equipment may be impaired.

In no event will Rockwell Automation, Inc. be responsible or liable for indirect or consequential damages resulting from the use or application of this equipment.

The examples and diagrams in this manual are included solely for illustrative purposes. Because of the many variables and requirements associated with any particular installation, Rockwell Automation, Inc. cannot assume responsibility or liability for actual use based on the examples and diagrams.

No patent liability is assumed by Rockwell Automation, Inc. with respect to use of information, circuits, equipment, or software described in this manual.

Reproduction of the contents of this manual, in whole or in part, without written permission of Rockwell Automation, Inc., is prohibited.

Documentation Feedback

Your comments will help us serve your documentation needs better. If you have any suggestions on how to improve this document, complete this form, publication RA-DU002, available at http://www.rockwellautomation.com/literature/.

Allen-Bradley, Rockwell Software, Rockwell Automation, and LISTEN. THINK. SOLVE are trademarks of Rockwell Automation, Inc.
Trademarks not belonging to Rockwell Automation are property of their respective companies.

Rockwell Otomasyon Ticaret A.Ş., Kar Plaza İş Merkezi E Blok Kat:6 34752 İçerenköy, İstanbul, Tel: +90 (216) 5698400

www.rockwellautomation.com

Power, Control and Information Solutions Headquarters

Americas: Rockwell Automation, 1201 South Second Street, Milwaukee, WI 53204-2496 USA, Tel: (1) 414.382.2000, Fax: (1) 414.382.4444
Europe/Middle East/Africa: Rockwell Automation NV, Pegasus Park, De Kleetlaan 12a, 1831 Diegem, Belgium, Tel: (32) 2 663 0600, Fax: (32) 2 663 0640
Asia Pacific: Rockwell Automation, Level 14, Core F, Cyberport 3, 100 Cyberport Road, Hong Kong, Tel: (852) 2887 4788, Fax: (852) 2508 1846

Publication 500-TD011A-EN-P - July 2014

Copyright © 2014 Rockwell Automation, Inc. All rights reserved. Printed in the U.S.A.