Technical Data

Original Instructions

PowerFlex DC Drive and Field Controller

Catalog Numbers 20P, 23P, 23PFC

Topic	Page
Summary of Changes	2
The PowerFlex DC Drive	3
The PowerFlex DC Field Controller	4
The PowerFlex DC Standalone Regulator	5
Unsurpassed Capability in Network Communication	5
PowerFlex DC Drive Catalog Number Explanation	6
PowerFlex DC Field Controller Catalog Number Explanation	9
PowerFlex DC Field Controller Product Selection	9
Factory-installed Options	10
User-installed Options	10
Isolation Transformers	12
Installation Considerations	21
Typical Power Wiring Diagrams	24
PowerFlex DC Drives Terminal Block Locations	30
PowerFlex DC Drives and Field Controller Circuit Protection	48
Mounting	61
Approximate Dimensions – PowerFlex DC Drives	62
Approximate Dimensions and Weights – PowerFlex DC Field Controllers	68
PowerFlex DC Drive Specifications	70
PowerFlex DC Field Controller Specifications	73
IP20 NEMA/UL Type Open Watts Loss	74
Additional Resources	77

Summary of Changes

This publication contains the following new or updated information. This list includes substantive updates only and is not intended to reflect all changes.

Topic	Page
Added Modbus communication adapter	5
Added Product Selection tables	7
Added Stand-alone Regulator Catalog Numbers	8
Updated Contactor Catalog Numbers from 100-D to 100E for 230V AC Input Drives	14
Updated Contactor Catalog Numbers from 100-D to 100E for 460V AC Input Drives	14
Updated Contactor Catalog Numbers from 100-D to 100E for 575V AC Input Drives	15
Updated Contactor Catalog Numbers from 100-D to 100E for 690V AC Input Drives	15
Updated Contactor Catalog Numbers from 100-D to 100E for 200V AC Field Controllers	16
Updated Contactor Catalog Numbers from 100-D to 100E for 500V AC Field Controllers	16
Changed graphics to show field leads coming off the primary side of isolation transformer and line reactor	25, 26, 27
Changed A+ and A- encoders from Single Channel to Single Ended	45
Updated Max. Airflow Noise Level for Frame B drives	75

The PowerFlex DC Drive

The PowerFlex® DC drive (20P) provides digital control for precise speed and current regulation, easy programmability, extensive diagnostics, and non-regenerative or regenerative operation. PowerFlex DC drives can run various applications, including extruder operations, finishing, drawing, and coating. The PowerFlex DC drive can effectively control applications that exhibit shock loads, high inertia, rapid acceleration and deceleration rates, or continuous regeneration. These features of the PowerFlex DC drive make it an excellent choice for existing DC machinery upgrades. The compact design of this drive includes a fully contained power module and a common control structure for the entire range of horsepower. And, to make connectivity even easier, the PowerFlex DC drive provides a standard DPI™ interface that is compatible with all PowerFlex DPI communication products.

The standard hardware consists of an open type enclosure, armature converter, regulated field converter for field weakening or economy applications, and an advanced regulator with integrated DPI functionality. The standard I/O includes eight digital inputs, four digital outputs, three analog inputs, two analog outputs, a DC tachometer, and encoder capability.

Optional I/O and feedback modules are available and are sold separately from the standard hardware offering. For more information, see I/O Option Kits and Feedback Option Kit (only for PowerFlex DC drives) on page 10.

Drive Features

- Fast-acting **Current Limit** and **Voltage Regulation** result in maximum accelerate/decel without tripping.
- **High-speed analog inputs** improve drive response to torque or speed commands.
- **Programming flexibility** allows parameters to be linked within the drive.
- **Field-flashable firmware** through DPI interface.
- **Flying Start** delivers smooth and instantaneous connection into a rotating load, regardless of commanded direction, without the need for any speed feedback.
- **Single-phase Regulated Field supply** (10 A, 14 A, 20 A, 40 A, and 70 A, depending on the drive size) standard on all frames.
- **Integral Process PI Control** replaces the need for a separate controller for a process loop.
- **TorqProve**™ helps assure control of the load when control is transferred between the drive and a mechanical brake.
- **Speed Regulation** - open-loop or closed-loop
  - Armature Feedback provides a 2000:1 rpm speed range
  - DC Tachometer Feedback provides up to 0.1% speed regulation
  - Encoder Feedback provides up to 0.1% speed regulation for the tightest application requirements.
- **Torque Regulation** - open-loop or closed-loop
  - Open-loop torque regulation provides ±5% regulation.
  - Encoder Feedback provides ±1% regulation and the ability to hold full load at zero speed.

Packaging and Mounting

- **IP20, NEMA/UL Type Open** - For conventional mounting inside or outside a control cabinet.

Communication Tools

The PowerFlex DC drive and field controller provide common communication tools that are familiar and easy to use, including the LCD Human Interface Module (HIM) and PC-based configuration tools.

- The LCD HIM provides:
  - Large and easy to read 7 line x 21 character, backlit display
  - Alternate function keys for shortcuts to common tasks
  - 'Calculator-like' number pad for fast and easy data entry (full numeric version only)
  - Control keys for local start, stop, speed, and direction
  - Remote versions for panel mount applications
- PC-based configuration tools include:
  - Connected Components Workbench™ (CCW) software v2.0. This software leverages proven Rockwell Automation and Microsoft® Visual Studio® technologies for drive configuration and programming. CCW software can be downloaded for free from rok.auto/ccw.
  - DriveTools™ SP (v4.01 or higher is required with a PowerFlex DC drive specific software patch. The patch can be downloaded from rok.auto/pcdc. A suite of software tools that provide an intuitive way to program, troubleshoot, and maintain Allen-Bradley drives, including the PowerFlex DC Drive Startup Wizard.
- Internal communications allow you to integrate the drive and/or field controller into the manufacturing process. Status indicators for all internal communication options are visible on the cover for easy setup and monitoring of drive communications. You can easily manage information from 'shop floor to top floor' and seamlessly integrate a complete system as you control, configure, and collect data.

The PowerFlex DC Field Controller

The PowerFlex DC Field Controller provides three-phase, four quadrant (reversing) DC motor or generator field control. The PowerFlex DC Field Controller can be used for standalone DC motor field control applications, or with a PowerFlex DC Digital drive or PowerFlex DC Standalone Regulator (SAR). A fiber-optic interface option module, or digital and analog I/O, provides transmission of the reference, feedback, and status signals between the drive or regulator and the field controller.

In the standalone mode, the PowerFlex DC Field Controller provides power to a DC motor field with a fixed reference by using fixed I/O. The PowerFlex DC Field Controller can also be used to supply various DC non-motor loads (highly inductive loads). These DC non-motor loads include galvanic applications, electromagnets, synchronous motor excitation circuits, and others.

A PowerFlex DC field controller is a cost-effective way to modernize DC motor controls while using/re-purposing existing equipment.

Controller Features

- **Programming flexibility** allows parameters to be linked within the device.
- **Field-flashable firmware** through DPI interface.
- **Reversing field supply** standard on all frames.
- **Control non-motor inductive loads**, such as electromagnets

The PowerFlex DC Standalone Regulator

The PowerFlex DC Standalone Regulator (SAR) and Gate Amplifier products provide an integrated solution to control external DC power modules. The SAR is a DC drive regulator that provides armature regulation, armature SCR gate signals and a regulated field supply. The SAR field supply consists of a single-phase, two quadrant (non-reversing) full wave rectified bridge, available as 40 amps or 70 amps. The SAR supports an AC line input voltage range of 230...690V AC and a field input voltage range of 100...460V AC.

Unsurpassed Capability in Network Communication

PowerFlex DC products are fully compatible with the wide variety of Allen-Bradley DPI communication adapters, which offer the following benefits:

BACnet	ControlNet™	DeviceNet™	EtherNet/IP	PROFIBUS	RS-485 DF1	Modbus RTU	Description
✓	✓	✓	✓				**(Unconnected Messaging)** permits other network devices (for example PanelView™) to communicate directly to a drive without routing the communication through the network scanner.
✓	✓	✓	✓		✓		**Adapter Routing** - Plug personal computer into one drive and talk to all other Allen-Bradley drives on same network, without being routed through network scanner.
✓	✓	✓	✓	✓	✓	✓	Access to 100% of all parameters over the network.
✓		✓	✓	✓			**Autobaud** capability makes initial connections less problematic.
		✓					**Change of State** significantly reduces network traffic by configuring control messages to be sent only upon customer defined states. Flexible configuration for each node (Example: "reference must change by more than 5%").
		✓	✓				**Peer Control** provides master-slave type control between drives. With this feature, one or more slave drives (consumers) can run based on the status of a master drive (producer). This feature can significantly reduce network traffic.
		✓					**ADR (Automatic Device Replacement)** saves significant time and effort when replacing a drive. The scanner can be configured to detect a new drive and download the required parameter settings.
✓	✓	✓	✓	✓	✓	✓	**Flexible Fault Configuration** - Adapters can be programmed to take fault-based actions, such as Ramp to Stop, and send user-configurable logic control and speed reference values. The drive can take different actions that are based on whether the network experienced a serious problem (broken cable, for example) versus network idle condition (PLC set to "Program").

PowerFlex DC Drive Catalog Number Explanation

20P	4	1	A	D	4P1	R	A	0	N	N	N
a	b	c	d	e	f	g	h	i	j	k	l

a	
Drive	
Code	Description
20P	PowerFlex DC drive

b	
Motor Operation	
Code	Description
2	Two quadrant operation[1]
4	Four quadrant operation

c	
Input Type	
Code	Description
1	6 pulse

d	
Enclosure	
Code	Description
A	IP20, NEMA/UL Type Open

e	
Input Voltage	
Code	Description
B	230V AC
D	460V AC[2]
E	600V AC
F	690V AC

(1) Not available for 230V AC input drives.
(2) Use this code for 400V AC input applications.

f1					
230V, 60 Hz Input					
Code	Hp	kW	Armature (A)	Frame	Field Amps
7P0	1.5	1.2	7	A	10
9P0	2	1.5	9		
012	3	2.2	12		
020	5	3.7	20		
029	7.5	5.5	29		
038	10	7.5	38		
055	15	11	55		
073	20	15	73		14
093	25	18.5	93		
110	30	22	110		
146	40	30	146	B	20
180	50	37	180		
218	60	45	218		
265	75	56	265		
360	100	75	360		
434	125	93	434		
521	150	112	521	C	
700	200	149	700		
875	250	186	875	D	40
1K0	300	224	1050		

f2					
460V, 60 Hz Input					
Code	Hp	kW	Armature (A)	Frame	Field Amps
4P1	2	1.5	4.1	A	10
6P0	3	2.2	6		
010	5	3.7	10		
014	7.5	505	14		
019	10	7.5	19		
027	15	11	27		
035	20	15	35		
045	25	18.5	45		
052	30	22	52		
073	40	30	73		14
086	50	37	86		
100	60	45	100		
129	75	56	129		
167	100	75	167	B	20
207	125	93	207		
250	150	112	250		
330	200	149	330		
412	250	187	412		
495	300	224	495	C	
667	400	298	667		
830	500	373	830	D	40
996	600	447	996		
1K1	700	552	1162		70
1K3	800	597	1328		
1K4	900	671	1494		

f3					
575V, 60 Hz Input					
Code	Hp	kW	Armature (A)	Frame	Field Amps
067	50	37	67.5	B	20
101	75	56	101.3		
135	100	75	135		
270	200	149	270		
405	300	224	405		
540	400	298	540	C	
675	500	373	675		
810	600	447	810	D	40
1K0	800	597	1080		
1K2	900	671	1215		
1K3	1000	746	1350		
1K6	1250	932	1668		

f4					
690V, 60 Hz Input					
Code	Hp	kW	Armature (A)	Frame	Field Amps
452	400	298	452	C	20
565	500	373	565		
678	600	447	678	D	40
791	700	552	791		
904	800	597	904		
1K0	900	671	1017		
1K1	1000	746	1130		70
1K2	1100	820	1243		
1K4	1250	932	1413		
1K5	1400	1044	1582		

g	
Field Supply	
Code	Description
R	Single-phase regulated

h	
Packaging/Documentation	
Code	Description
A	Shipping carton and user manual

i	
HIM	
Code	Description
0	Blank Cover

j	
I/O Options[1]	
Code	Description
N	None[2]

k	
Communication Options	
Code	Description
N	None[3]

l	
Cabinet Options	
Code	Description
N	None

(1) All I/O options are purchased separately and user installed. See I/O Option Kits on page 10.
(2) Eight 24V DC digital inputs, four digital outputs, three analog inputs, and two analog outputs are standard.
(3) Standard; for user installed options, see Communication Option Kits on page 11.

Product Selection

IP00/IP20, NEMA/UL Type Open

All drives are rated 150% overload for 60 seconds, 200% for 3 seconds.

200...240V AC, Three-Phase Drives

Drive Output Rating - 230V AC Input			Regenerative Drives Cat. No.	Frame Size
Normal Duty kW	Normal Duty Hp	Amps		
1.2	1.5	7	20P41AB7P0RA0NNN	A
1.5	2	9	20P41AB9P0RA0NNN	
2.2	3	12	20P41AB012RA0NNN	
3.7	5	20	20P41AB020RA0NNN	
5.5	7.5	29	20P41AB029RA0NNN	
7.5	10	38	20P41AB038RA0NNN	
11	15	55	20P41AB055RA0NNN	
15	20	73	20P41AB073RA0NNN	
18.5	25	93	20P41AB093RA0NNN	
22	30	110	20P41AB110RA0NNN	
30	40	146	20P41AB146RA0NNN	B
37	50	180	20P41AB180RA0NNN	
45	60	218	20P41AB218RA0NNN	
56	75	265	20P41AB265RA0NNN	
75	100	360	20P41AB360RA0NNN	
93	125	434	20P41AB434RA0NNN	
112	150	521	20P41AB521RA0NNN	C
149	200	700	20P41AB700RA0NNN	
186	250	875	20P41AB875RA0NNN	D
224	300	1050	20P41AB1K0RA0NNN	

380...480V AC, Three-Phase Drives

Drive Output Rating - 460V AC Input			Non-regenerative Drives	Regenerative Drives	Frame Size
Normal Duty kW	Normal Duty Hp	Amps	Cat. No.	Cat. No.	
1.5	2	4.1	20P21AD4P1RA0NNN	20P41AD4P1RA0NNN	A
2.2	3	6	20P21AD6P0RA0NNN	20P41AD6P0RA0NNN	
3.7	5	10	20P21AD010RA0NNN	20P41AD010RA0NNN	
5.5	7.5	14	20P21AD014RA0NNN	20P41AD014RA0NNN	
7.5	10	19	20P21AD019RA0NNN	20P41AD019RA0NNN	
11	15	27	20P21AD027RA0NNN	20P41AD027RA0NNN	
15	20	35	20P21AD035RA0NNN	20P41AD035RA0NNN	
18.5	25	45	20P21AD045RA0NNN	20P41AD045RA0NNN	
22	30	52	20P21AD052RA0NNN	20P41AD052RA0NNN	
30	40	73	20P21AD073RA0NNN	20P41AD073RA0NNN	
37	50	86	20P21AD086RA0NNN	20P41AD086RA0NNN	
45	60	100	20P21AD100RA0NNN	20P41AD100RA0NNN	
56	75	129	20P21AD129RA0NNN	20P41AD129RA0NNN	
75	100	167	20P21AD167RA0NNN	20P41AD167RA0NNN	B
93	125	207	20P21AD207RA0NNN	20P41AD207RA0NNN	
112	150	250	20P21AD250RA0NNN	20P41AD250RA0NNN	
149	200	330	20P21AD330RA0NNN	20P41AD330RA0NNN	
187	250	412	20P21AD412RA0NNN	20P41AD412RA0NNN	
224	300	495	20P21AD495RA0NNN	20P41AD495RA0NNN	C
298	400	667	20P21AD667RA0NNN	20P41AD667RA0NNN	

380...480V AC, Three-Phase Drives (Continued)

Drive Output Rating - 460V AC Input			Non-regenerative Drives	Regenerative Drives	Frame Size
Normal Duty kW	Normal Duty Hp	Amps	Cat. No.	Cat. No.	
373	500	830	20P21AD830RA0NNN	20P41AD830RA0NNN	D
447	600	996	20P21AD996RA0NNN	20P41AD996RA0NNN	
552	700	1162	20P21AD1K1RA0NNN	20P41AD1K1RA0NNN	
597	800	1328	20P21AD1K3RA0NNN	20P41AD1K3RA0NNN	
671	900	1494	20P21AD1K4RA0NNN	20P41AD1K4RA0NNN	

500...600V AC, Three-Phase Drives

Drive Output Rating - 460V AC Input			Non-regenerative Drives Cat. No.	Regenerative Drives Cat. No.	Frame Size
Normal Duty kW	Normal Duty Hp	Amps			
37	50	67.5	20P21AE067RA0NNN	20P41AE067RA0NNN	B
56	75	101.3	20P21AE101RA0NNN	20P41AE101RA0NNN	
75	100	135	20P21AE135RA0NNN	20P41AE135RA0NNN	
149	200	270	20P21AE270RA0NNN	20P41AE270RA0NNN	
224	300	405	20P21AE405RA0NNN	20P41AE405RA0NNN	
298	400	540	20P21AE540RA0NNN	20P41AE540RA0NNN	C
373	500	675	20P21AE675RA0NNN	20P41AE675RA0NNN	
447	600	810	20P21AE810RA0NNN	20P41AE810RA0NNN	D
597	800	1080	20P21AE1K0RA0NNN	20P41AE1K0RA0NNN	
671	900	1215	20P21AE1K2RA0NNN	20P41AE1K2RA0NNN	
746	1000	1350	20P21AE1K3RA0NNN	20P41AE1K3RA0NNN	
932	1250	1688	20P21AE1K6RA0NNN	20P41AE1K6RA0NNN	

690V AC, Three-Phase Drives

Drive Output Rating - 460V AC Input			Non-regenerative Drives Cat. No.	Regenerative Drives Cat. No.	Frame Size
Normal Duty kW	Normal Duty Hp	Amps			
298	400	452	20P21AF452RA0NNN	20P41AF452RA0NNN	C
373	500	565	20P21AF565RA0NNN	20P41AF565RA0NNN	
447	600	678	20P21AF678RA0NNN	20P41AF678RA0NNN	D
552	700	791	20P21AF791RA0NNN	20P41AF791RA0NNN	
597	800	904	20P21AF904RA0NNN	20P41AF904RA0NNN	
671	900	1017	20P21AF1K0RA0NNN	20P41AF1K0RA0NNN	
746	1000	1130	20P21AF1K1RA0NNN	20P41AF1K1RA0NNN	
820	1100	1243	20P21AF1K2RA0NNN	20P41AF1K2RA0NNN	
932	1250	1413	20P21AF1K4RA0NNN	20P41AF1K4RA0NNN	
1044	1400	1582	20P21AF1K5RA0NNN	20P41AF1K5RA0NNN	

Stand-alone Regulator Catalog Numbers

Conformally coated circuit boards are provided with the following catalog numbers.

230V/460V AVC Input Regulators	575V/690V AVC Input Regulators	Field Amps
Cat. No.	Cat. No.	
23PMD4	23PMF4	40
23PMD7	23PMF7	70
23PAMP(1)	23PAMP(1)	(1)

(1) Gate Amplifier - used with all voltage classes of the Stand-Alone Regulator. The Stand-Alone Regulator and Gate Amplifier are currently sold through Rockwell Automation Drive Systems only. Consult the factory for availability.

PowerFlex DC Field Controller Catalog Number Explanation

23PFC	B	245
a	b	c

a	
Drive	
Code	Description
23PFC	PowerFlex DC field controller

b	
Voltage Range/Phase	
Code	Description
B	60...200V AC (±10%) / 3
D	230...500V AC (±10%) / 3

c	
DC Output (A)	
Code	Description
017	17
060	60
120	120
245	245
365	365
570	570

PowerFlex DC Field Controller Product Selection

All PowerFlex DC field controllers are conformal coated.

IP20, NEMA/UL Type Open – 60...200V AC, Three-Phase, 50/60 Hz

Input, V AC	DC Output, amps	Cat. No.	Frame Size
60...200	17	23PFCB017	A
	60	23PFCB060	
	120	23PFCB120	
	245	23PFCB245	B
	365	23PFCB365	
	570	23PFCB570	

IP20, NEMA/UL Type Open – 230...500V AC, Three-Phase, 50/60 Hz

Input, V AC	DC Output, amps	Cat. No.	Frame Size
230...500	17	23PFCD017	A
	60	23PFCD060	
	120	23PFCD120	
	245	23PFCD245	B
	365	23PFCD365	
	570	23PFCD570	

Factory-installed Options

Each PowerFlex DC drive includes one encoder and DC analog tachometer input. No other factory-installed options are currently available for PowerFlex DC drives and field controllers.

User-installed Options

Unless otherwise specified, these user installed options are available for PowerFlex DC drives and field controllers.

Human Interface Modules

Description	Handheld/ Local Drive Mount	Remote (Panel Mount) IP66, NEMA/UL Type 4x/12[1]
	Cat. No.	Cat. No.
No HIM (blank plate)	20-HIM-A0	–
LCD display, full numeric keypad	20-HIM-A3	20-HIM-C3S[2]
LCD display, programmer only	20-HIM-A5	20-HIM-C5S[2]
Enhanced LCD, full numeric keypad	20-HIM-A6	20-HIM-C6S[2]

(1) Only for indoor use.
(2) Includes a 1202-C30 interface cable (3 m) for connection to drive.

Human Interface Module Accessories

Description	Cat. No.
Bezel kit for LCD HIMs, NEMA/UL Type 1[1]	20-HIM-B1
PowerFlex HIM interface cable, 1 m (39 in.)[2]	20-HIM-H10
Cable kit (male-female)[3] • 0.33 m (1.1 ft) • 1 m (3.3 ft) • 3 m (9.8 ft) • 9 m (29.5 ft)	 1202-H03 1202-H10 1202-H30 1202-H90
DPI/SCANport™ 1-to-2 port splitter cable	1203-S03

(1) Includes a 1202-C30 interface cable (3 m) for connection to drive.
(2) Required only when HIM is used as a handheld or remote.
(3) Required in addition to 20-HIM-H10 for distances up to a total maximum of 10 m (32.8 ft).

I/O Option Kits

Description	Cat. No.
I/O expansion board[1]	20P-S5V62
115V AC to 24V DC eight-channel I/O converter board[2]	20P-S520L

(1) Has four 24V DC digital inputs, four digital outputs, and two analog outputs.
(2) Converts eight digital inputs.

Feedback Option Kit (only for PowerFlex DC drives)

Description	Cat. No.
Resolver feedback option module[1]	20P-RES-A0

(1) The PowerFlex DC drive is not CE Certified when the resolver feedback module is installed in the drive.

20-HIM-A0

20-HIM-A3

20-HIM-A5

20-HIM-A6

20-HIM-CS3

20-HIM-CS5

20-HIM-CS6

Communication Option Kits

Description	Cat. No.
BACnet MS/TP RS-485 communication adapter	20-COMM-B
ControlNet communication adapter (coaxial)	20-COMM-C
DeviceNet communication adapter	20-COMM-D
EtherNet/IP™ communication adapter	20-COMM-E
Dual-port EtherNet/IP™ communication adapter	20-COMM-ER
HVAC communication adapter	20-COMM-H
Modbus/TCP communication adapter	20-COMM-M
PROFIBUS DP communication adapter	20-COMM-P
ControlNet communication adapter (fiber)	20-COMM-Q
RS-485 DF1 communication adapter	20-COMM-S
External communications kit power supply	20-XCOMM-AC-PS1
External DPI communications kit	20-XCOMM-DC-BASE
External DPI I/O option board(1)	20-XCOMM-IO-OPT1
USB converter(2)	1203-USB

(1) For use only with external DPI communications kits 20-XCOMM-DC-BASE.
(2) Includes 2 m USB, 20-HIM-H10, and 22-HIM-H10 cables.

Personal Computer Programming Software

Description	Cat. No.
Connected Components Workbench™ (CCW) software	(1)
DriveTools™ SP software	(2)
Studio 5000® environment	(3)

(1) Download available for free at rok.auto.ccw.
(2) Available to order through the 'How to Buy' link at http://ab.rockwellautomation.com/Drives/Software/9303-DriveTools-SP#overview.
(3) For more information on the Studio 5000 environment, see https://www.rockwellautomation.com/en-us/products/software/factorytalk/designsuite/studio-5000/studio-5000-logix-designer.html.

Fiber-optic Kits

Fiber-optic card is not required. It can be used for communication between a PowerFlex DC drive and field controller. For more information on fiber-optic cards, see publication 20P-IN078, PowerFlex DC Fiber-optic Interface Option Module Installation Instructions.

Description	Cat. No.
Fiber-optic card	20P-S5H781
Fiber-optic cable kit • 3 m (9.8 ft) • 5 m (16.4 ft)	 SK-20P-2950 SK-20P-29501

Overvoltage Protection Devices

When the PowerFlex DC Field Controller is used to supply a very inductive load like a motor/generator field or an electromagnet, an overvoltage protection device (voltage clamp) and dampening resistor must be installed on the field controller load. See the PowerFlex DC Field Controller Voltage Clamp Installation Instructions, publication 23PFC-IN002, for details. These tables identify the voltage clamp and dampening resistor kits.

Voltage Clamp Kits

Field Controller Specifications			
AC Input Voltage	Output Amp Rating	Frame Size	Voltage Clamp Cat. No.
200	17...120	A	23P-FCOVPD-B-FA
200	245...570	B	23P-FCOVPD-B-FE
500	17...120	A	23P-FCOVPD-D-FA
500	245...570	B	23P-FCOVPD-D-FE

Dampening Resistor (RB) Kit Selection

Field Controller AC Input Voltage Range (Vrms)	RB Resistor Value Ohms	RB Resistor Size Watts	RB Resistor Kit Cat. No.(1)
60...100V	220	930	23P-FC-RB100
101...200V	390	930	23P-FC-RB200
201...300V	680	930	23P-FC-RB300
301...400V	1000	930	23P-FC-RB400
401...500V	1200	930	23P-FC-RB500

(1) Resistor kits are IP00 / Open Type and must be installed in an enclosure.

Isolation Transformers

Isolation transformers are available for installations that have specific types of AC supply configurations or require drive protection due to AC line disturbances.

A customer-supplied 200V AC Three Phase Secondary Isolation Transformer must be installed with a 200V AC PowerFlex DC field controller.

PowerFlex DC Drive Isolation Transformers

Three Phase Primary Voltage			Three Phase Secondary Voltage		
kVA	kW (Hp)	Voltage	230V AC Cat. No.	460V AC Cat. No.	575V AC Cat. No.
5	1.2...2.2 (1.5...3)	230	–	1321-3TW005-AB	–
		460	1321-3TW005-BA	1321-3TW005-BB	
		575	1321-3TW005-CA	1321-3TW005-CB	
7.5	3.7 (5)	230	1321-3TW007-AA	1321-3TW007-AB	
		460	1321-3TW007-BA	1321-3TW007-BB	
		575	1321-3TW007-CA	1321-3TW007-CB	
11	5.5 (7.5)	230	1321-3TW011-AA	1321-3TW011-AB	
		460	1321-3TW011-BA	1321-3TW011-BB	
		575	1321-3TW011-CA	1321-3TW011-CB	
14	7.5 (10)	230	1321-3TW014-AA	1321-3TW014-AB	
		460	1321-3TW014-BA	1321-3TW014-BB	
		575	1321-3TW014-CA	1321-3TW014-CB	
20	11 (15)	230	1321-3TW020-AA	1321-3TW020-AB	
		460	1321-3TW020-BA	1321-3TW020-BB	
		575	1321-3TW020-CA	1321-3TW020-CB	
27	15 (20)	230	1321-3TW027-AA	1321-3TW027-AB	
		460	1321-3TW027-BA	1321-3TW027-BB	
		575	1321-3TW027-CA	1321-3TW027-CB	
34	18.5 (25)	230	1321-3TW034-AA	1321-3TW034-AB	
		460	1321-3TW034-BA	1321-3TW034-BB	
		575	1321-3TW034-CA	1321-3TW034-CB	
40	22 (30)	230	1321-3TW040-AA	1321-3TW040-AB	
		460	1321-3TW040-BA	1321-3TW040-BB	
		575	1321-3TW040-CA	1321-3TW040-CB	
51	30 (40)	230	1321-3TW051-AA	1321-3TW051-AB	
		460	1321-3TW051-BA	1321-3TW051-BB	
		575	1321-3TW051-CA	1321-3TW051-CB	
63	37 (50)	230	1321-3TH063-AA	1321-3TH063-AB	1321-3TH063-AC
		460	1321-3TH063-BA	1321-3TH063-BB	1321-3TH063-BC
		575	1321-3TH063-CA	1321-3TH063-CB	1321-3TH063-CC
75	45 (60)	230	1321-3TH075-AA	1321-3TH075-AB	1321-3TH075-AC
		460	1321-3TH075-BA	1321-3TH075-BB	1321-3TH075-BC
		575	1321-3TH075-CA	1321-3TH075-CB	1321-3TH075-CC
93	56 (75)	230	1321-3TH093-AA	1321-3TH093-AB	1321-3TH093-AC
		460	1321-3TH093-BA	1321-3TH093-BB	1321-3TH093-BC
		575	1321-3TH093-CA	1321-3TH093-CB	1321-3TH093-CC
118	75 (100)	230	1321-3TH118-AA	1321-3TH118-AB	1321-3TH118-AC
		460	1321-3TH118-BA	1321-3TH118-BB	1321-3TH118-BC
		575	1321-3TH118-CA	1321-3TH118-CB	1321-3TH118-CC
145	93 (125)	230	1321-3TH145-AA	1321-3TH145-AB	1321-3TH145-AC
		460	1321-3TH145-BA	1321-3TH145-BB	1321-3TH145-BC
		575	1321-3TH145-CA	1321-3TH145-CB	1321-3TH145-CC

PowerFlex DC Drive Isolation Transformers (Continued)

Three Phase Primary Voltage			Three Phase Secondary Voltage		
kVA	kW (Hp)	Voltage	230V AC Cat. No.	460V AC Cat. No.	575V AC Cat. No.
175	112 (150)	230	1321-3TH175-AA	1321-3TH175-AB	1321-3TH175-AC
		460	1321-3TH175-BA	1321-3TH175-BB	1321-3TH175-BC
		575	1321-3TH175-CA	1321-3TH175-CB	1321-3TH175-CC
220	145 (200)	230	1321-3TH220-AA	1321-3TH220-AB	1321-3TH220-AC
		460	1321-3TH220-BA	1321-3TH220-BB	1321-3TH220-BC
		575	1321-3TH220-CA	1321-3TH220-CB	1321-3TH220-CC
275	187 (250)	230	1321-3TH275-AA	1321-3TH275-AB	1321-3TH275-AC
		460	1321-3TH275-BA	1321-3TH275-BB	1321-3TH275-BC
		575	1321-3TH275-CA	1321-3TH275-CB	1321-3TH275-CC
330	224 (300)	230	1321-3TH330-AA	1321-3TH330-AB	1321-3TH330-AC
		460	1321-3TH330-BA	1321-3TH330-BB	1321-3TH330-BC
		575	1321-3TH330-CA	1321-3TH330-CB	1321-3TH330-CC
440	298 (400)	230	–	1321-3TH440-AB	1321-3TH440-AC
		460		1321-3TH440-BB	1321-3TH440-BC
		575		1321-3TH440-CB	1321-3TH440-CC
550	373 (500)	230		1321-3TH550-AB	1321-3TH550-AC
		460		1321-3TH550-BB	1321-3TH550-BC
		575		1321-3TH550-CB	1321-3TH550-CC
660	448 (600)	230		1321-3TH660-AB	1321-3TH660-AC
		460		1321-3TH660-BB	1321-3TH660-BC
		575		1321-3TH660-CB	1321-3TH660-CC
770	522 (700)	230		1321-3TH770-AB	1321-3TH770-AC
		460		1321-3TH770-BB	1321-3TH770-BC
		575		1321-3TH770-CB	1321-3TH770-CC
880	597 (800)	230		1321-3TH880-AB	1321-3TH880-AC
		460		1321-3TH880-BB	1321-3TH880-BC
		575		1321-3TH880-CB	1321-3TH880-CC

PowerFlex DC Field Controller Isolation Transformers – 500V AC Input

Three Phase Primary Voltage		460V AC Three Phase Secondary
kVA	Voltage	Isolation Transformer Cat. No.
14	230	1321-3TW014-AB
	460	1321-3TW014-BB
	575	1321-3TW014-CB
51	230	1321-3TW051-AB
	460	1321-3TW051-BB
	575	1321-3TW051-CB
93	230	1321-3TH093-AB
	460	1321-3TH093-BB
	575	1321-3TH093-CB
175	230	1321-3TH175-AB
	460	1321-3TH175-BB
	575	1321-3TH175-CB
275	230	1321-3TH275-AB
	460	1321-3TH275-BB
	575	1321-3TH275-CB
440	230	1321-3TH440-AB
	460	1321-3TH440-BB
	575	1321-3TH440-CB

AC Input Line Reactors and Contactors

If a DC contactor is used, an AC input contactor is not needed.

PowerFlex DC Drives – 230V AC Input

Frame	Drive Current Rating Code	DC amps	AC Line amps	Hp	IP00 (Open Style) Line Reactor Cat No.	Line Reactor kW (Hp)	AC Input Contactor Cat. No.
A	7P0	7	5.7	1.5	1321-3R8-A	0.75 (1)	100-C12D10
	9P0	9	7.4	2	1321-3R12-A	1.49 (2)	100-C12D10
	012	12	9.8	3	1321-3R18-A	0.75...3.7 (1...5)	100-C12D10
	020	20	16	5	1321-3R18-A		100-C23D10
	029	29	24	7.5	1321-3R55-A	5.5...11 (7.5...15)	100-C30D10
	038	38	31	10	1321-3R55-A		100-C37D10
	055	55	45	15	1321-3R55-A		100-C60D10
	073	73	60	20	1321-3R80-A	15 (20)	100-C60D10
	093	93	76	25	1321-3R100-A	18.5...22 (25...30)	100-C85D10
	110	110	90	30	1321-3R100-A		100-E116⊗11(1) (2)
B	146	146	119	40	1321-3R160-A	30...37 (40...50)	100-E146⊗11(1) (2)
	180	180	147	50	1321-3R160-A		100-E190⊗11(2)
	218	218	178	60	1321-3RB250-A	45...56 (60...75)	100-E190⊗11(2)
	265	265	217	75	1321-3RB250-A		100-E265⊗11(2)
	360	360	294	100	1321-3RB320-A	75 (100)	100-E305⊗11(2)
	434	434	355	125	1321-3RB400-A	93 (125)	100-E370⊗11(2)
C	521	521	426	150	1321-3R500-A	112 (150)	100-E460⊗11(2)
	700	700	572	200	1321-3R600-A	149 (200)	100-E580⊗11(2)
D	875	875	715	250	1321-3R750-A	186 (250)	100-E750⊗11(2)
	1K0	1050	858	300	1321-3R850-A	224 (300)	100-E860⊗11(2)

(1) To order with built in terminal lugs, add the letter "**L**" to the end of the catalog number (example: **100-E116⊗11L**).
(2) The catalog number as listed is incomplete. See IEC Contactor Specifications Technical Data, publication 100-TD013, to select coil voltage and optional PLC interface terminals.

PowerFlex DC Drives – 460V AC Input

Frame	Drive Current Rating Code	DC amps	AC Line amps	Hp	IP00 (Open Style) Line Reactor Cat No.	Line Reactor kW (Hp)	AC Input Contactor Cat. No.
A	4P1	4.1	3.3	2	1321-3R4-A	0.55 (0.75)	100-C12D10
	6P0	6	4.9	3	1321-3R8-A	0.75 (1)	100-C12D10
	010	10	8.2	5	1321-3R18-B	1.5...7.5 (2...10)	100-C12D10
	014	14	11.4	7.5	1321-3R18-B		100-C12D10
	019	19	15.5	10	1321-3R18-B		100-C23D10
	027	27	22.1	15	1321-3R55-B	11...22 (15...30)	100-C23D10
	035	35	28.6	20	1321-3R55-B		100-C30D10
	045	45	36.8	25	1321-3R55-B		100-C37D10
	052	52	42.5	30	1321-3R55-B		100-C43D10
	073	73	59.6	40	1321-3R80-B	30 (40)	100-C60D10
	086	86	70.3	50	1321-3R100-B	37...45 (50...60)	100-C85D10
	100	100	81.7	60	1321-3R100-B		100-C85D10
	129	129	105.4	75	1321-3R160-B	56...75 (75...100)	100-E116⊗11(1) (2)
B	167	167	136.4	100	1321-3R160-B		100-E146⊗11(1) (2)
	207	207	169.1	125	1321-3RB250-B	93...112 (125...)	100-E190⊗11(2)
	250	250	204.3	150	1321-3RB250-B		100-E205⊗11(2)
	330	330	269.6	200	1321-3RB320-B	149 (200)	100-E305⊗11(2)
	412	412	336.6	250	1321-3RB400-B	186.4 (250)	100-E370⊗11(2)

PowerFlex DC Drives – 460V AC Input (Continued)

Frame	Drive Current Rating Code	DC amps	AC Line amps	Hp	IP00 (Open Style) Line Reactor Cat No.	Line Reactor kW (Hp)	AC Input Contactor Cat. No.
C	495	495	404.4	300	1321-3R500-B	223.7 (300)	100-E460⊗11(2)
	667	667	544.9	400	1321-3R600-B	298.3 (400)	100-E580⊗11(2)
D	830	830	678.1	500	1321-3R750-B	372.8 (500)	100-E750⊗11(2)
	996	996	813.7	600	1321-3R850-B	447.4 (600)	100-E860⊗11(2)
	1K1	1162	949.4	700	1321-3R1000-B	552 (700)	100-E1060⊗11(2)
	1K3	1328	1085.0	800	2 x1321-3R600-B	596.6 (800)	(1)
	1K4	1494	1220.6	900	2 x1321-3R600-B	671.1 (900)	(1)

(1) To order with built in terminal lugs, add the letter "**L**" to the end of the catalog number (example: **100-E116⊗11L**).
(2) The catalog number as listed is incomplete. See IEC Contactor Specifications Technical Data, publication 100-TD013, to select coil voltage and optional PLC interface terminals.

PowerFlex DC Drives – 575V AC Input

Frame	Drive Current Rating Code	DC amps	AC Line amps	Hp	IP00 (Open Style) Line Reactor Cat No.	Line Reactor kW (Hp)	AC Input Contactor Cat. No.
B	067	67.5	55.1	50	1321-3R55-B	37 (50)	100-C60D10
	101	101.25	82.7	75	1321-3R100-B	56 (75)	100-C85D10
	135	135	110.3	100	1321-3R130-B	75 (100)	100-E116x11(1) (2)
	270	270	220.6	200	1321-3RB250-B	149 (200)	100-E305⊗11(2)
	405	405	330.9	300	1321-3RB320-B	224 (300)	100-E370⊗11(2)
C	540	540	441.2	400	1321-3R500-B	298 (400)	100-E460⊗11(2)
	675	675	551.5	500	1321-3R600-B	373 (500)	100-E580⊗11(2)
D	810	810	661.8	600	1321-3R750-B	447 (600)	100-E750⊗11(2)
	1K0	1080	882.4	800	1321-3R1000-B	597 (800)	100-E1060⊗11(2)
	1K2	1215	992.7	900	1321-3R1000-B	671 (900)	100-E1060⊗11(2)
	1K3	1350	1103.0	1000	2 x 1321-3R600-B	746 (1000)	(3)
	1K6	1687.5	1378.7	1250	2 x 1321-3R750-B	—	(3)

(1) To order with built in terminal lugs, add the letter "**L**" to the end of the catalog number (example: **100-E116⊗11L**).
(2) The catalog number as listed is incomplete. See IEC Contactor Specifications Technical Data, publication 100-TD013, to select coil voltage and optional PLC interface terminals.
(3) No AC Input contactor available for this drive rating - must be sourced locally.

PowerFlex DC Drives – 690V AC Input Drives

Frame	Drive Current Rating Code	DC amps	AC Line amps	Hp	IP00 (Open Style) Line Reactor Cat No.	Line Reactor kW (Hp)	AC Input Contactor Cat. No.
C	452	452	369	400	1321-3R500-C	—	100-E460⊗11(1)
	565	565	462	500	1321-3R600-C		100-E580⊗11(1)
D	678	678	554	600	1321-3R750-C		100-E580⊗11(1)
	791	791	646	700	1321-3R750-C		100-E750⊗11(1)
	904	904	739	800	1321-3R1000-C		100-E750⊗11(1)
	1K0	1017	831	900	1321-3R1000-C		100-E860⊗11(1)
	1K1	1130	923	1000	2 x 1321-3R600-C		100-E1060⊗11(1)
	1K2	1243	1016	1100	2 x 1321-3R600-C		100-E1060⊗11(1)
	1K4	1412.5	1154	1250	2 x 1321-3R750-C		(2)
	1K5	1582	1292	1400	2 x1321-3R750-C		(2)

(1) The catalog number as listed is incomplete. See IEC Contactor Specifications Technical Data, publication 100-TD013, to select coil voltage and optional PLC interface terminals.
(2) No AC Input contactor available for this drive rating - must be sourced locally.

PowerFlex DC Field Controller AC Input Line Reactors and AC Contactors

These tables contain the recommended AC input line reactors and AC contactors for use with the PowerFlex DC field controller.

IMPORTANT An AC input contactor can only be used when the device is used in 'standalone' mode. An AC contactor for a device cannot be used when a PowerFlex DC field controller is paired with and controlled by a PowerFlex DC drive.

ATTENTION: Do not remove AC power until the field controller output (load) current is zero. Equipment damage can occur.

PowerFlex DC Field Controller – 200V AC Input

Frame	Field Controller Cat. No.	DC amps	AC Line amps	IP00 (Open Style) Line Reactor Cat No.	Line Reactor kW	AC Input Contactor Cat. No.
A	23PFCB017	17	14.45	1321-3R18-A	0.75...3.7	100-C23D10
	23PFCB060	60	51	1321-3R80-A	15	100-C60D10
	23PFCB120	120	102	1321-3R160-A	30...37	100-E116⊗11(1) (2)
B	23PFCB245	245	208	1321-3RB250-A	45...56	100-E265⊗11(2)
	23PFCB365	365	310	1321-3RB400-A	93	100-E370⊗11(2)
	23PFCB570	570	485	1321-3R600-A	149	100-E580⊗11(2)

(1) To order with built in terminal lugs, add the letter "**L**" to the end of the catalog number (example: **100-E116⊗11L**).
(2) The catalog number as listed is incomplete. See IEC Contactor Specifications Technical Data, publication 100-TD013, to select coil voltage and optional PLC interface terminals.

PowerFlex DC Field Controller – 500V AC Input

Frame	Field Controller Cat. No.	DC amps	AC Line amps	IP00 (Open Style) Line Reactor Cat No.	Line Reactor kW	AC Input Contactor Cat. No.
A	23PFCD017	17	14.45	1321-3R18-B	1.5...7.5	100-C23D10
	23PFCD060	60	51	1321-3R80-B	30	100-C60D10
	23PFCD120	120	102	1321-3R160-B	56...75	100-E116⊗11(1) (2)
B	23PFCD245	245	208	1321-3RB250-B	93...112	100-E265⊗11(2)
	23PFCD365	365	310	1321-3RB400-B	186.4	100-E370⊗11(2)
	23PFCD570	570	485	1321-3R600-B	298.3	100-E580⊗11(2)

(1) To order with built in terminal lugs, add the letter "**L**" to the end of the catalog number (example: **100-E116⊗11L**).
(2) The catalog number as listed is incomplete. See IEC Contactor Specifications Technical Data, publication 100-TD013, to select coil voltage and optional PLC interface terminals.

Install an SCR Overvoltage Protection Device

When the PowerFlex DC field controller is used as a motor/generator field supply, an overvoltage protection device (voltage clamp) must be installed on the field controller load. The purpose of the voltage clamp is to provide a means to let the DC output current to the load decay if the power is interrupted to the field controller. If the AC power to the connected field controller is interrupted, the current in the DC output to the field starts to the decay rapidly. This rapid decay generates voltages that are in direct proportion to the rate of decay of the 'field collapse.' These voltages can damage the field controller and/or the motor wire insulation. The voltage clamp is connected directly across the DC output power connections to the load and during normal operation it appears as an open circuit. See PowerFlex Field Controller with AC Input Contactor on page 29, for an illustration of the voltage clamp installation location.

Dynamic Brake Resistor Kits and DC Output Contactors

See Alternate Dynamic Brake Resistor Kits and DC Output Contactors on page 19 for recommended alternate DC Output Contactors for 575V and 690V AC input drives, respectively.

230V AC Input Drives

Frame	Drive Current Rating Code	DC Amps	AC Line Amps	Hp	Dynamic Brake Resistor Kit Cat. No.	Armature Voltage (V)	Total dB Resistance (ohms)	DC Loop Contactor Cat. No.(1)		DC Contactor Crimp Lugs Cat. No.(2)
								Drive without Dynamic Brake	Drive with Dynamic Brake	
A	7P0	7	5.7	1.5	1370-DBL62	240	20	1370-NC56	1370-DC56	1370-LG40
	9P0	9	7.4	2	1370-DBL63					
	012	12	9.8	3	1370-DBL64		15			
	020	20	16	5	1370-DBL65		8.6			
	029	29	24	7.5	1370-DBL66		6			
	038	38	31	10	1370-DBL67		5			
	055	55	45	15	1370-DBL68		3.5			1370-LG56
	073	73	60	20	1370-DBL69		2.6	1370-NC110	1370-DC110	1370-LG92
	093	93	76	25	1370-DBL70		2			
	110	110	90	30	1370-DBL71					1370-LG110
B	146	146	119	40	1370-DBL72		1.4	1370-NC180	1370-DC180	1370-LG160
	180	180	147	50	1370-DBL73		1			1370-LG180
	218	218	178	60	1370-DBL74			1370-NC280	1370-DC280	1370-LG228
	265	265	217	75	1370-DBL75		0.67			1370-LG268
	360	360	294	100	1370-DBL76		0.47	ABB_EHDB360C2P-1L2S	ABB_EHDB360C-1L22SS	(3)
	434	434	355	125	CUTLER-HAMMER_G3AP50 (Qty 4 - two in series, two in parallel)		0.4	ABB_EHDB520C2P-1L2S	ABB_EHDB520C-1L22SS	
C	521	521	426	150	HUBBELL_Y139W322GB		0.322			
	700	700	572	200	(4)		0.25	ABB_EHDB800C2P-1L2S	ABB_EHDB800C-1L22SS	
D	875	875	715	250			0.2	ABB_EHDB960C2P-1L2S	ABB_EHDB960C-1L22SS	
	1K0	1050	858	300				SIEMENS-MFG_14-193-101-58-2 (Qty 2)	SIEMENS-MFG_14-193-101-58-2 (Qty 1)	

(1) Coil voltage = 115V AC, 50/60Hz.
(2) For more information, see DC Contactor Crimp Lug Kit Specifications on page 19.
(3) Wire and lug size dependent on enclosure dimensions and local codes.
(4) No dynamic brake resistor kit available for this drive rating—must be sourced locally.

460V AC Input Drives

Frame	Drive Current Rating Code	DC Amps	AC Line Amps	Hp	Dynamic Brake Resistor Kit Cat. No.	Armature Voltage (Volts)	Total dB Resistance (ohms)	DC Loop Contactor Cat. No.(1)		DC Contactor Crimp Lugs Cat. No.(2)
								Drive without Dynamic Brake	Drive with Dynamic Brake	
A	4P1	4.1	3.3	2	1370-DBH63	500	81	1370-NC56	1370-DC56	1370-LG40
	6P0	6	4.9	3	1370-DBH64		62			
	010	10	8.2	5	1370-DBH65		45			
	014	14	11.4	7.5	1370-DBH66		27			
	019	19	15.5	10	1370-DBH67		20			
	027	27	22.1	15	1370-DBH68		12			
	035	35	28.6	20	1370-DBH69		10		1370-DC56	1370-LG40
	045	45	36.8	25	1370-DBH70		9			1370-LG52
	052	52	42.5	30	1370-DBH71		7			
	073	73	59.6	40	1370-DBH72		5.2	1370-NC110	1370-DC110	1370-LG92
	086	86	70.3	50	1370-DBH73		4			
	100	100	81.7	60	1370-DBH74		4			1370-LG110
	129	129	105.4	75	1370-DBH75		3	1370-NC180	1370-DC180	1370-LG140
B	167	167	136.4	100	1370-DBH76		2.1			1370-LG180
	207	207	169.1	125	1370-DBH77			1370-NC280	1370-DC280	1370-LG228
	250	250	204.3	150	1370-DBH78		1.5		1370-DC280	1370-LG268
	330	330	269.6	200	1370-DBH79		1.05	ABB_EHDB360C2P-1L2S	ABB_EHDB360C-1L22SS	(3)
	412	412	336.6	250	HUBBELL_Y95W808GB		1	ABB_EHDB520C2P-1L2S	ABB_EHDB520C-1L22SS	
C	495	495	404.4	300	HUBBELL_Y101W595GB		0.8			
	667	667	544.9	400	HUBBELL_Y109W542GB		0.625	ABB_EHDB800C2P-1L2S	ABB_EHDB800C-1L22SS	
D	800	830	678.1	500	(4)		0.463	ABB_EHDB960C2P-1L2S	ABB_EHDB960C-1L22SS	
	960	996	813.7	600			0.322	SIEMENS-MFG_14-193-101-58-2 (Qty 2)	SIEMENS-MFG_14-193-101-58-2 (Qty 1)	
	1K1	1162	949.4	700						
	1K3	1328	1085.0	800			0.255	CUTLER-HAMMER_6702ED636-2 (Qty 2)	CUTLER-HAMMER_6702ED636-2 (Qty 1)	
	1K4	1494	1220.6	900						

(1) Coil voltage = 115V AC, 50/60Hz.
(2) For more information, see DC Contactor Crimp Lug Kit Specifications on page 19.
(3) Wire and lug size dependent on enclosure dimensions and local codes.
(4) No dynamic brake resistor kit available for this drive rating—must be sourced locally.

DC Contactor Crimp Lug Kit Specifications

Use the information that is provided in this table to help you order the correct Lug kit for your application.

Rated Motor Armature Current (1) A DC	DC Contactor Rating A DC	Armature Conductor Size (2) AWG	dB Conductor Size (3) AWG	Armature Conductor Crimp Lug Hole Size	dB Conductor Crimp Lug Hole Size	Lug Kit Catalog Number
4.1...35	56	8	8	#10	#10	1370-LG40
45...52		6				1370-LG52
55		4				1370-LG56
60...86	110	2	6	0.25 in.	0.25 in.	1370-LG92
100...110		1/0	4			1370-LG110
129	180	2/0	2	0.3125 in.	0.3125 in.	1370-LG140
146		3/0				1370-LG160
147...167		4/0				1370-LG180
207...218	280	300MCM	1/0	0.5 in.	0.375 in.	1370-LG228
250...265		400MCM	2/0			1370-LG268
266...280		500MCM	3/0			1370-LG280

(1) The Rated Motor Armature Current is taken directly from the motor nameplate or motor data. The current listed in this column is the maximum current that is allowed for the Armature Conductor Size (column 3) and the DC Contactor Rating (column 2).
(2) The armature conductors are sized by multiplying the Rated Motor Armature Current by 1.25 as provided for in NEC 420-22 (1987). The DC lug ratings are determined from NEC Table 310-16 (1987) for copper conductors, insulation temperature that is rated at 75° C (167° F) at an ambient temperature of 30° C (86° F). If conditions are other than shown in NEC Table 310-16, then refer to application codes.
(3) The dynamic braking (dB) conductors are sized as in footnote 2, but at half ampacity due to the short time duration of current flow in these conductors, and has been sized to satisfy NEMA Standard ICS 3-302.62 - Dynamic Braking. If the load inertia is larger than the motor inertia, calculations must be made to determine correct conductor sizing and dB resistor wattage per NEMA Standard ICS 3-302.62.

Alternate Dynamic Brake Resistor Kits and DC Output Contactors

The following alternate dynamic brake resistor kits and/or DC output contactors can be used with the corresponding PowerFlex DC drives but must be sourced separately from the drive.

575V AC Input Drives

Frame	Drive Current Rating Code	DC Amps	AC Line Amps	Hp	Armature Voltage (Volts)	dB Resistor Size (ohms)	DC Loop Contactor Cat. No.(1)		DC Contactor Crimp Lugs Cat. No.(2)
							Drive w/No Dynamic Brake	Drive w Dynamic Brake	
B	067	67.5	55.1	50	600	5.93	ABB_EHDB220C2P-1L2S	ABB_EHDB220C-1L22SS	(3)
	101	101	83	75		3.95			
	135	135	110	100		2.96			
	270	270	221	200		1.48	ABB_EHDB360C2P-1L2S	ABB_EHDB360C-1L22SS	
	405	405	331	300		0.988	ABB_EHDB520C2P-1L2S	ABB_EHDB520C-1L22SS	
C	540	540	441	400		0.741	ABB_EHDB650C2P-1L2S	ABB_EHDB650C-1L22SS	
	675	675	551	500		0.593	ABB_EHDB800C2P-1L2S	ABB_EHDB800C-1L22SS	
D	810	810	662	600		0.494	ABB_EHDB960C2P-1L2S	ABB_EHDB960C-1L22SS	
	1K0	1080	882	800		0.370	SIEMENS-MFG_14-193-101-58-2 (Qty 2)	SIEMENS-MFG_14-193-101-58-2 (Qty 1)	
	1K2	1215	993	900		0.329			
	1K3	1350	1103	1000		0.296	CUTLER-HAMMER_6702ED636-2 (Qty 2)	CUTLER-HAMMER_6702ED636-2 (Qty 1)	
	1K6	1688	1379	1250		0.237			

(1) Coil voltage = 115V AC, 50/60Hz.
(2) For more information, see DC Contactor Crimp Lug Kit Specifications on page 19.
(3) Wire and lug size dependent on enclosure dimensions and local codes.

690V AC Input Drives

Frame	Drive Current Rating Code	DC Amps	AC Line Amps	Hp	Armature Voltage (Volts)	dB Resistor Size (ohms)	DC Loop Contactor Cat. No.(1)		DC Contactor Crimp Lugs Cat. No.(2)
							Drive w/No Dynamic Brake	Drive w Dynamic Brake	
C	452	452	369	400	700	1.03	SIEMENS-MFG_14-193-101-58-2 (Qty 2)	SIEMENS-MFG_14-193-101-58-2 (Qty 1)	(3)
	565	565	462	500		0.826			
D	678	678	554	600		0.688			
	791	791	646	700		0.590			
	904	904	739	800		0.516			
	1K0	1017	831	900		0.459			
	1K1	1130	923	1000		0.413			
	1K2	1243	1016	1100		0.375			
	1K4	1413	1154	1250		0.330	CUTLER-HAMMER_6702ED636-2 (Qty 2)	CUTLER-HAMMER_6702ED636-2 (Qty 1)	
	1K5	1582	1292	1400		0.295			

(1) Coil voltage = 115V AC, 50/60Hz.
(2) For more information, see DC Contactor Crimp Lug Kit Specifications on page 19.
(3) Wire and lug size dependent on enclosure dimensions and local codes.

Frame D Terminal Adapter Kits

The following frame D drives require the listed terminal adapter kits to meet UL installation requirements.

Voltage Class	Drive Current Rating Code	U, V, W Terminal Adapter Kit No.	C, D Terminal Adapter Kit No.
230	1K0	SK-20P-S726172	–
460	1K1	SK-20P-S726171	
	1K3		
	1K4		
575	1K0	SK-20P-S726172	
	1K2	SK-20P-S726171	
	1K3		
	1K6		SK-20P-S726173
690	1K0	SK-20P-S726172	–
	1K1	SK-20P-S726171	
	1K2		
	1K4		
	1K5		

Installation Considerations

PowerFlex DC Drive

The PowerFlex DC drive has the following built in protective features to help simplify installation:

- Electronic motor overload protection increases motor life

There are many other factors that must be considered for optimal performance in any given application. This block diagram highlights the primary installation considerations.

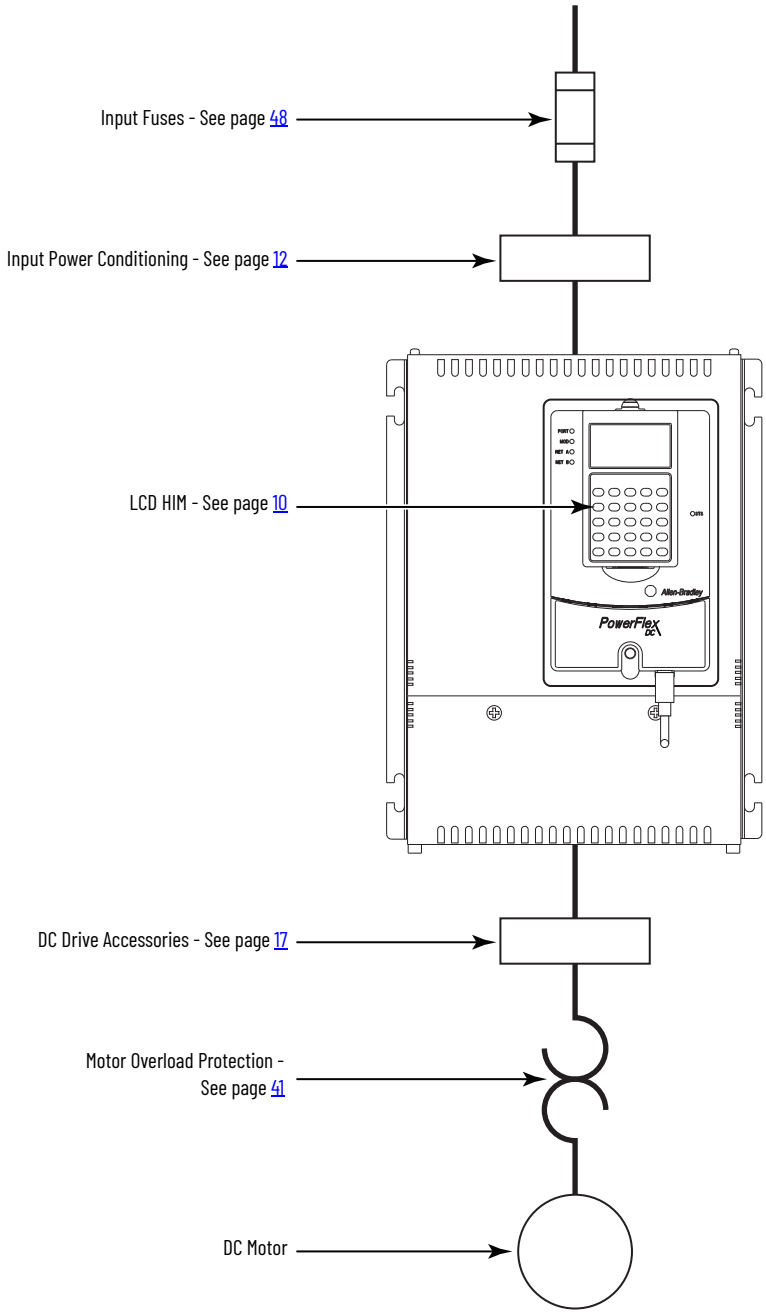

PowerFlex DC Field Controller

Consider the installation considerations that are shown in this block diagram for optimal performance in any given application.

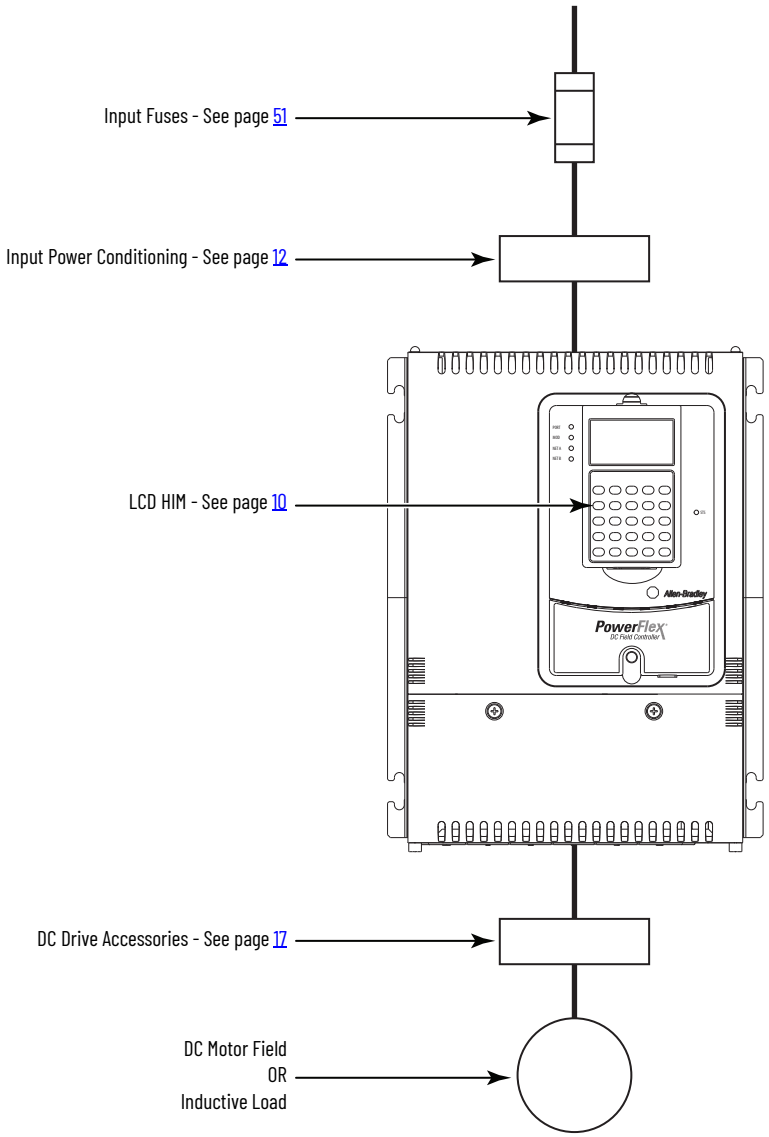

PowerFlex DC Drives Power Wiring

AC Input Voltages

PowerFlex DC drives are rated for the following AC input voltages @ 50/60 Hz ±5%:

Mains Circuit (Terminals U, V, W)

- 230V ±10%, 3Ph
- 400V ±10%, 3Ph
- 440V ±10%, 3Ph
- 460V ±10%, 3Ph
- 480V ±10%, 3Ph
- 575V ±10%, 3Ph
- 690V ±10%, 3Ph

Field Circuit (Terminals U1, V1)

- 230V ±10%, 1Ph
- 400V ±10%, 1Ph
- 460V ±10%, 1Ph

Control Circuit (Terminals U2, V2)

- 115V ±15% or 230V ±15%, 1Ph

IMPORTANT For only frame B and C drives, a jumper must be placed between terminals SA-SB when 115V AC input power is used for the control circuit. See Frame B Drives SA-SB Terminal Block Location on page 37 and Frame C Drives SA-SB Terminal Block Location on page 37 for terminal block locations.

DC Output Voltages

The output voltages that are listed in these two tables take into account an AC input undervoltage within the stated tolerance limits and a voltage drop of 4% due to an AC input line reactor. It is the same as the rated armature voltage suggested for the connected motor.

Armature Circuit

AC Input Voltage	DC Output Armature Voltage (Terminals C & D)	
(Terminals U, V, W)	Two Quadrant Drive	Four Quadrant Drive
230V ±10%, 3Ph	260V	240V
400V ±10%, 3Ph	470V	420V
440V ±10%, 3Ph	530V	460V
460V ±10%, 3Ph	560V	480V
480V ±10%, 3Ph	580V	500V
575V ±10%, 3Ph	680V	600V
690V ±10%, 3Ph	810V	720V

Field Circuit

AC Input Voltage	DC Output Field Voltage(1) (Terminals C1 & D1)	
(Terminals U1 & V1)	Fixed Field	Adjustable Field
230V ±10%, 1Ph	200V	200V
400V ±10%, 1Ph	310V	310V
460V ±10%, 1Ph	360V	360V

(1) The maximum field voltage is equal to 0.85 x AC input line voltage

PowerFlex Field Controllers Power Wiring

AC Input Voltages

PowerFlex field controllers are rated for the following AC input voltages @ 50/60 Hz ±5%:

Mains Circuit (Terminals U, V, W)

- Cat. No. 23PFCB*xxx*: 60...200V AC, ±10%, 3Ph
- Cat. No. 23PFCD*xxx*: 230...500V AC, ±10%, 3Ph

Control Circuit (Terminals U2, V2)

- 115V ±15% or 230V ±15%, 1Ph

IMPORTANT For only frame B field controllers, a jumper must be placed between terminals SA-SB on the switching power supply circuit board for the control circuits to work with 115V AC input. See Frame B Drives SA-SB Terminal Block Location on page 25 for terminal block locations.

DC Output Voltages

The output voltages that are shown here include an AC input undervoltage within the stated tolerance limits and a voltage drop of 4% due to an AC input line reactor. It is the same as the rated armature voltage suggested for the connected load.

AC Input Voltage (Terminals U, V, W)	DC Output Voltage (Terminals C and D)
200V, ±10%, 3Ph	210V
230V, ±10%, 3Ph	240V
400V, ±10%, 3Ph	420V (1)
440V,±10%, 3Ph	460V
460V, ±10%, 3Ph	480V
480V ±10%, 3Ph	500V
500V, ±10%, 3Ph	520V (1)

(1) Voltage measured according to DIN 40 030 (09/93)

Typical Power Wiring Diagrams

The following diagrams represent recommended power wiring configurations for standard PowerFlex DC drive installations.

PowerFlex DC Drive Power Wiring with AC Input Contactor

For footnotes, see PowerFlex DC Drive Power Wiring Diagram Footnotes on page 28.

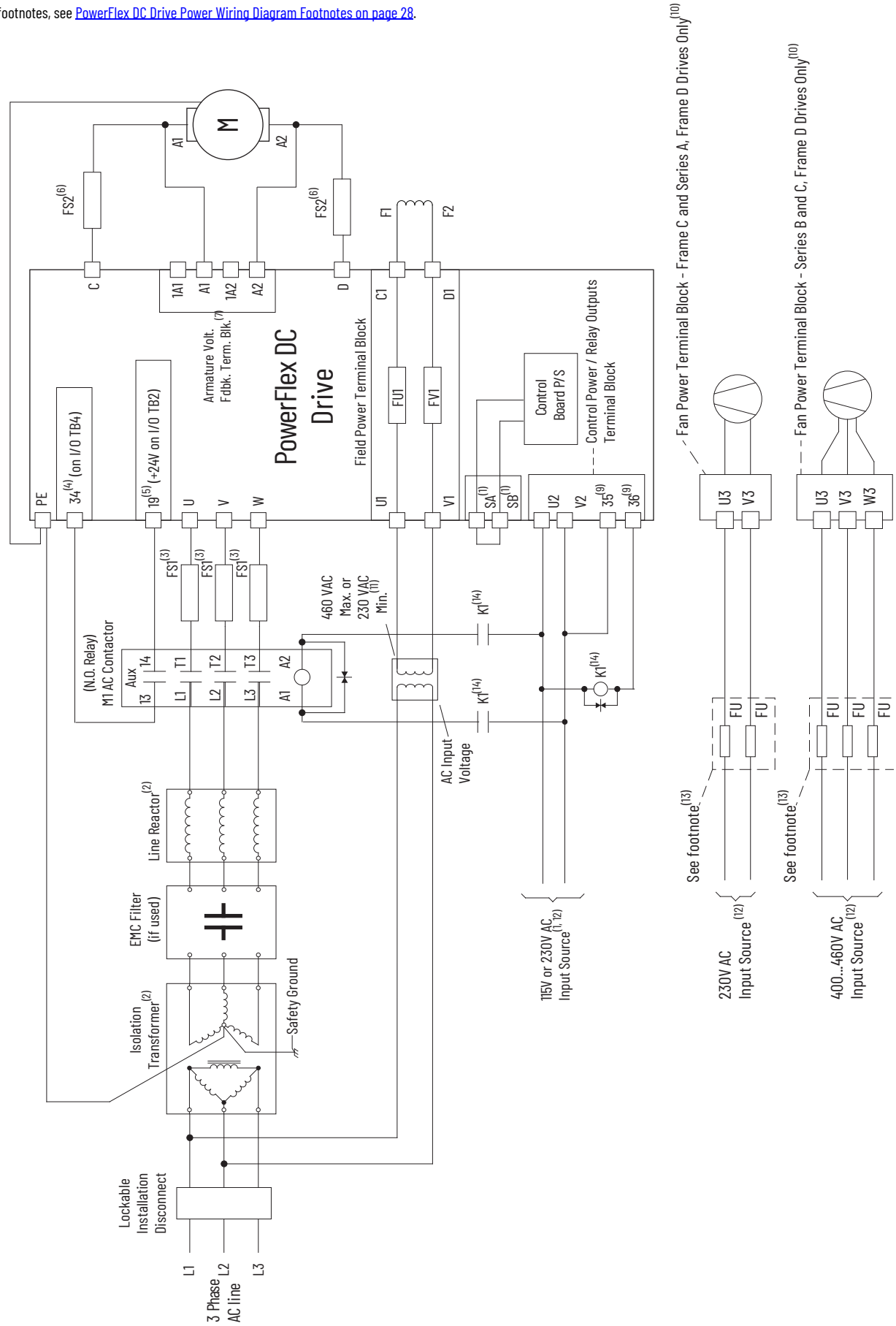

PowerFlex DC Drive Power Wiring with DC Output Contactor

For footnotes, see PowerFlex DC Drive Power Wiring Diagram Footnotes on page 28.

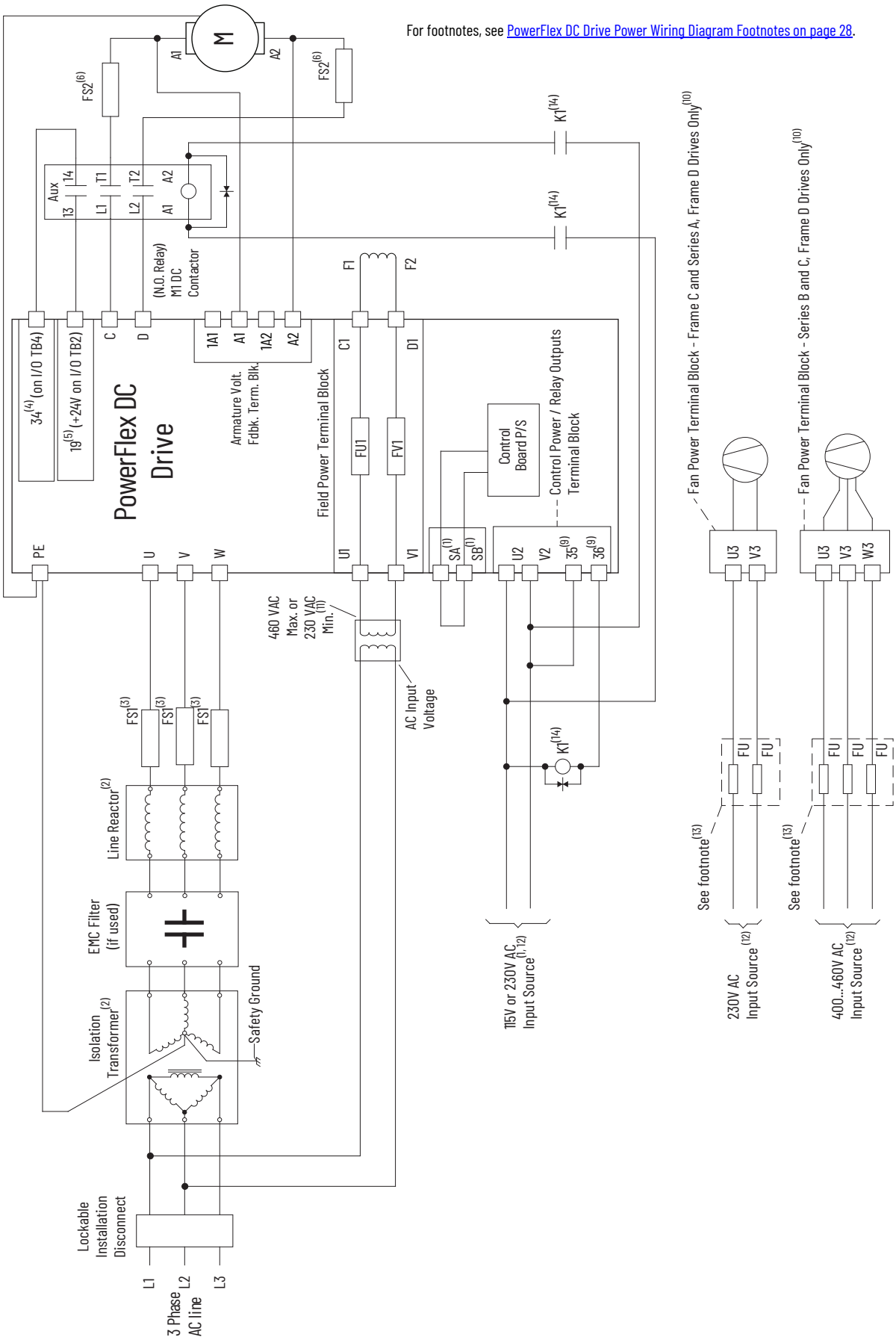

PowerFlex DC Drive Power Wiring with DC Output/Dynamic Braking Contactor and a Dynamic Brake

For footnotes, see PowerFlex DC Drive Power Wiring Diagram Footnotes on page 28.

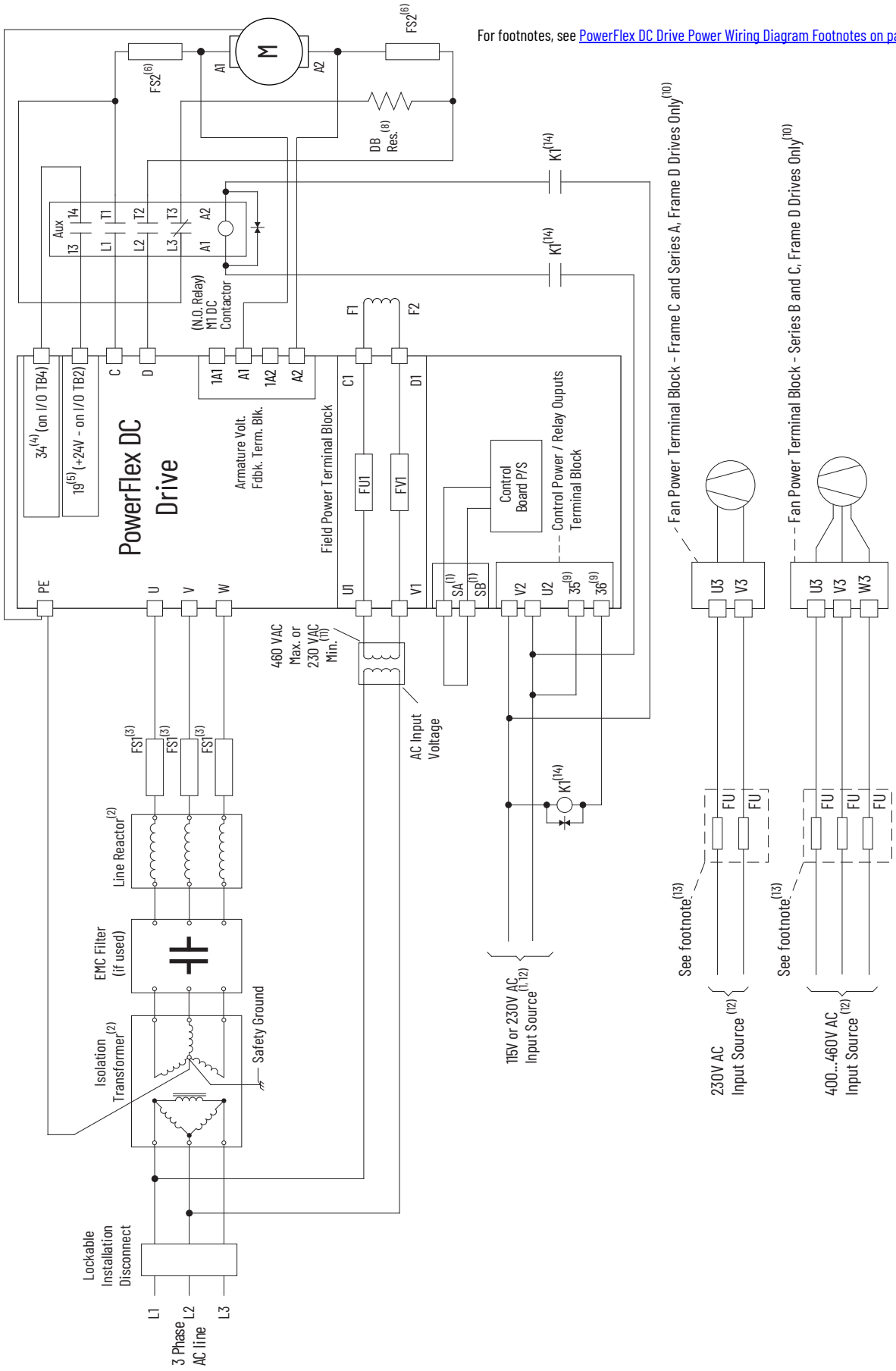

PowerFlex DC Drive Power Wiring Diagram Footnotes

1. For frame B and C drives only, a jumper is required between terminals SA and SB for 115V AC control input power. See PowerFlex DC Drives and Field Controller Control Circuit Input Power on page 36 for more information.
2. An isolation transformer and/or 3...5% impedance line reactor is required. If the isolation transformer provides the required 3...5% impedance, a line reactor is not required. For recommendations, see Isolation Transformers on page 12 and AC Input Line Reactors and Contactors on page 14. We recommend that the isolation transformer has a grounded wye secondary neutral. If the PowerFlex DC drive is installed in a system with an impedance ground connection, see Grounding for Installations in Neutral Ground or High Impedance System in the PowerFlex Digital DC Drive User Manual, publication 20P-UM001, for more information.
3. AC input fuses for the armature converter are not provided for frame A and B drives (the customer must purchase). AC input fuses for the armature converter are internally mounted on frame C and D drives. For fuse recommendations, see PowerFlex DC Drives and Field Controller Circuit Protection on page 48.
4. Par 140 [Digital In8 Sel] set to 31 'Contactor.'
5. If the +24V internal power supply is used, terminal 18 (24V common) must be jumpered to terminal 35 (digital input common).
6. For four quadrant frame A and B drives, armature output fuses are required (the customer must purchase). For two quadrant frame A and B drives, armature output fuses are recommended (the customer must purchase). For fuse recommendations, see PowerFlex DC Drives and Field Controller Circuit Protection on page 48.
7. When you use an AC input contactor, armature voltage feedback is not required.
8. The 'Enable' input must be removed to perform a dynamic braking stop.
9. Par 1391 [ContactorControl] = 1 'AC Cntctr' and Par 1392 [Relay Out 1 Sel] = 25 'Contactor.' Important: Terminals 35 and 36 are on the Control Power / Relay Outputs Terminal block, NOT the I/O terminal blocks. See Frames A and B Contact Relay and Thermistor Terminal Block Locations on page 41, and Frame D Contact Relay and Thermistor Terminal Block Locations (only for PowerFlex DC Drives) on page 42.
10. Frame C and D drives require only an external power supply for the heat sink cooling fans. For more information, see Frame C Heat Sink Cooling Fan Specifications on page 38 and Frame D, Series B and C Heat Sink Cooling Fan Specifications on page 39.
11. See PowerFlex DC Drive Field Converter Connections on page 34.
12. If sourced from the main three-phase AC input, the connections must be taken from the primary side of the Isolation Transformer or Line Reactor (clean power).
13. Fuses or a circuit breaker. For more information, see Frame C Heat Sink Cooling Fan Specifications on page 38 and Frame D, Series B and C Heat Sink Cooling Fan Specifications on page 39.
14. For frames B, C, and D drives, a pilot relay is required for the contactor coil.

Armature Power Terminal Connections

Terminals	Description
U, V, W	Three-phase AC input to the armature converter
C, D	DC output to the motor armature
PE	Safety ground

PowerFlex Field Controller with AC Input Contactor

This illustration represents the recommended power wiring configuration for a standard PowerFlex DC field controller installation with an AC contactor.

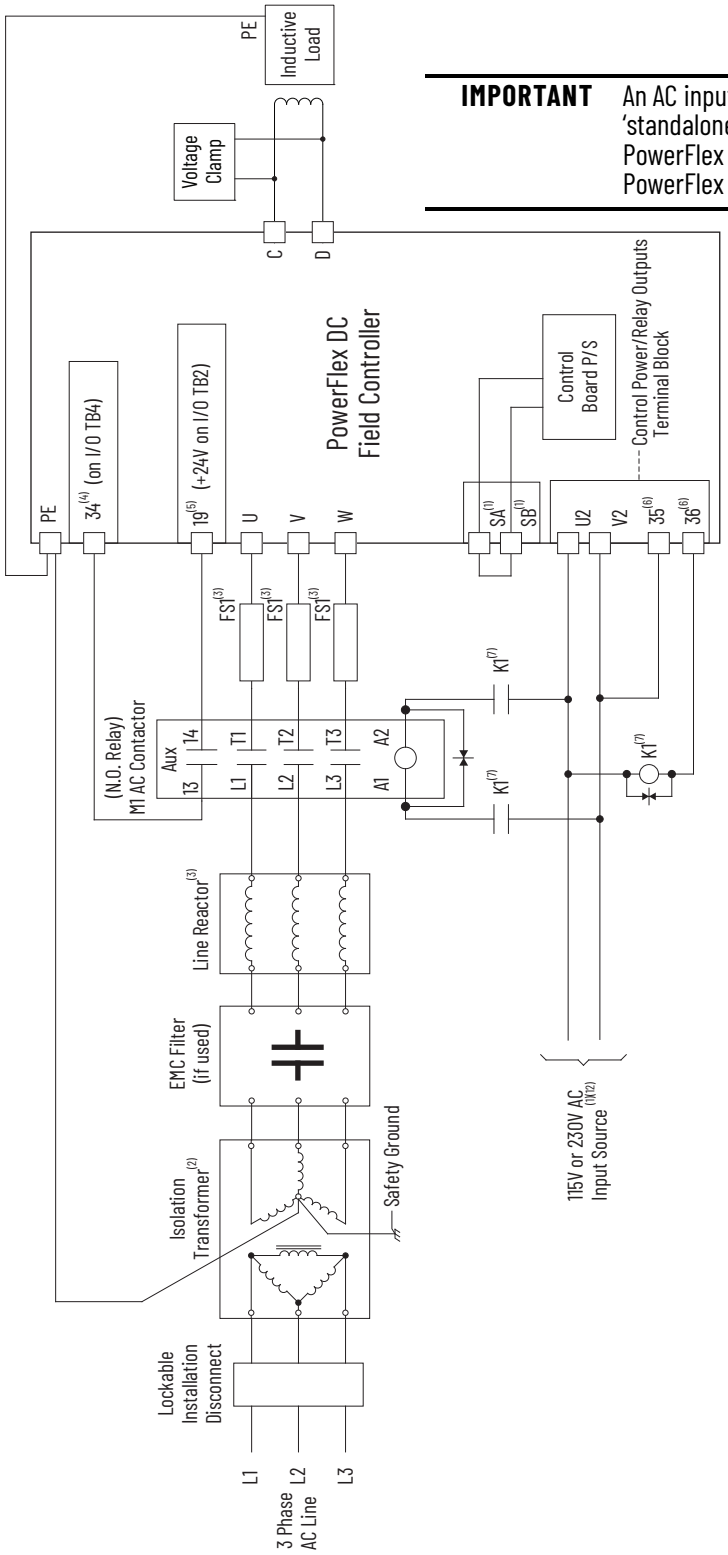

IMPORTANT An AC input contactor can only be used when the device is used in 'standalone' mode. An AC contactor for a device cannot be used when a PowerFlex DC field controller is paired with and controlled by a PowerFlex DC drive.

PowerFlex Field Controller Power Wiring Diagram Notes

1. For frame B field controllers only, a jumper is required between terminals SA and SB for 115V AC control input power. For more information, see PowerFlex Field Controllers Power Wiring on page 24.
2. An isolation transformer and/or 3...5% impedance line reactor is required. If the isolation transformer provides the required 3...5% impedance, a line reactor is not required. For recommendations, see PowerFlex DC Field Controller AC Input Line Reactors and AC Contactors on page 16. It is recommended that the isolation transformer has a grounded wye secondary neutral. If the PowerFlex DC field controller is installed in a system with an impedance ground connection, see Grounding for Installations in a Neutral Ground or High Impedance System in the PowerFlex DC Field Controller Installation Instructions, publication 23PFC-IN001.
3. AC input fuses (FS1) for the field converter are not provided with field controllers. For fuse recommendations, see Field Controller Frames A and B AC Input Line Fuses on page 51.
4. Par 140 [Digital In8 Sel] set to 31 "Contactor."
5. If the +24V internal power supply is used, terminal 18 (24V common) must be jumpered to terminal 35 (digital input common).
6. Par 1391 [ContactorControl] = 1 "AC Cntctr" and Par 1392 [Relay Out 1 Sel] = 25 "Contactor". Important: Terminals 35 and 36 are on the Control Power/Relay Outputs Terminal block, NOT the I/O terminal blocks. See Frames A and B Contact Relay and Thermistor Terminal Block Locations on page 41.
7. For frames B field controllers only, a pilot relay is required for the contactor coil.

PowerFlex DC Drives Terminal Block Locations

ATTENTION: Do not operate the drive with the power terminal cover removed. Operating the drive with the power terminal cover removed can result in a hazardous condition that can cause personal injury and/or equipment damage.

Frame A Armature Terminal Block Locations

Bottom View

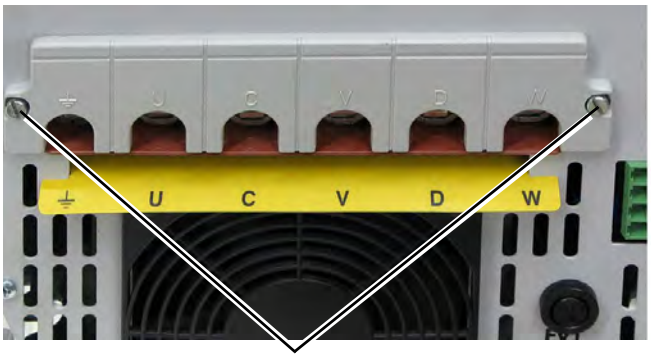

Loosen the two screws that secure the power terminal cover to the drive chassis. Remove the power terminal cover to connect the armature power wiring.

Front View

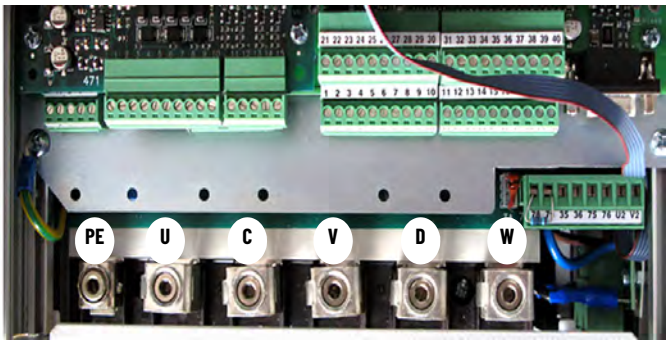

Front view of drive is shown with bottom protective and power terminal covers removed.

Frame B Armature Terminal Block Locations

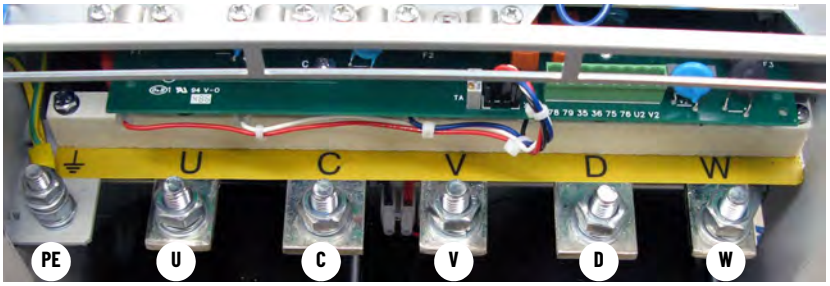

Frame C Armature Terminal Block Locations

Front View

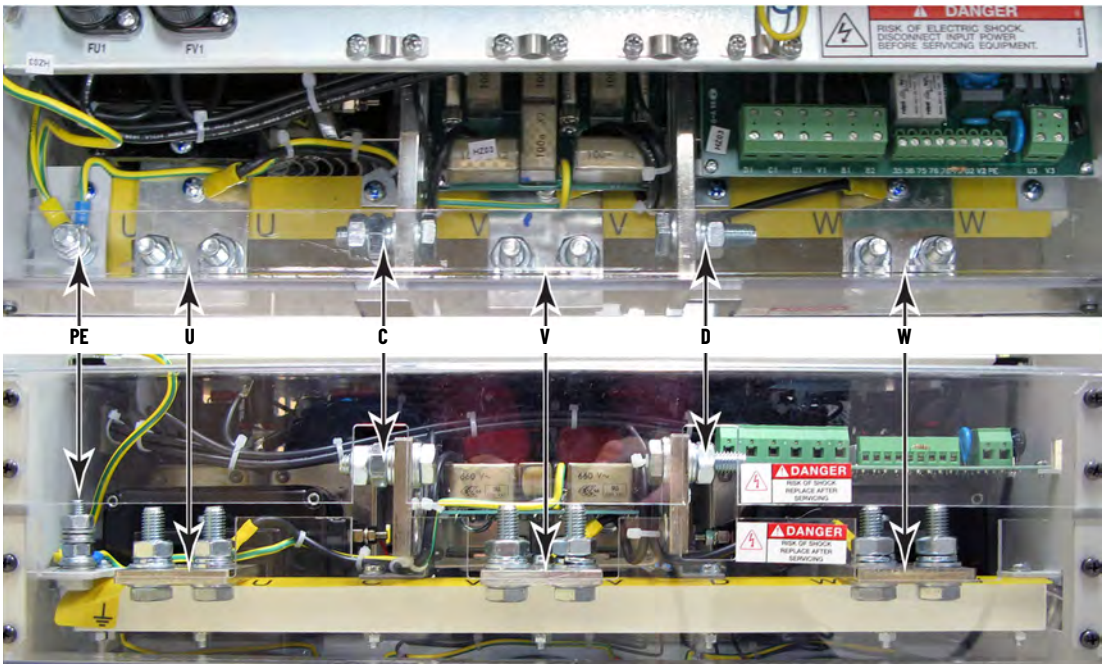

Bottom View

Frame D Armature Terminal Block Locations

IMPORTANT Certain frame D drives require the use of a terminal adapter kits for terminals U, V, W, C and D. See Frame D Terminal Adapter Kits on page 20 for details.

Top of Drive

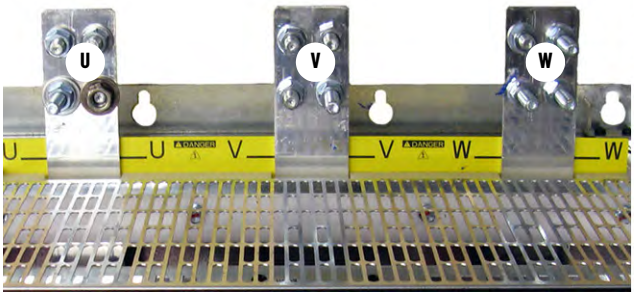

Bottom of Drive

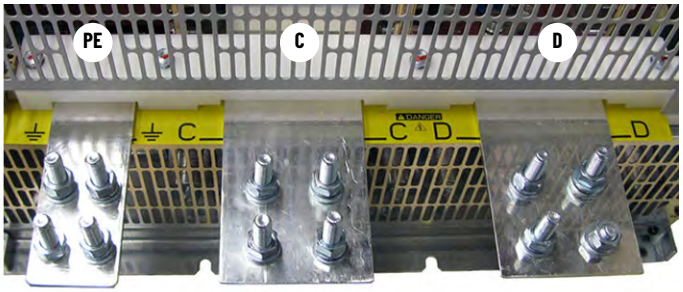

Armature Power Terminal and Ground (PE) Wire Sizes

Frame	Drive Current Rating Code[1]				Terminals	Wire Size and Type	Terminal Bolt Size (mm)	Final Torque N•m (lb•in)
	230V	460V	575V	690V				
A	7P0...055	4P1...052	–	–	U, V, W, C, D, PE	See Cable and Wiring Recommendations in the PowerFlex Digital DC Drive User Manual, publication 20P-UM001.	5	6 (53)
	073...110	073...129					Terminal Block	12 (106)
B	All	All			U, V, W, C, D		10	25 (221)
					PE		8	15 (132.75)
C					U, V, W, C, D		10	25 (221)
					PE		8	15 (132.75)
D			All	All	U, V, W, C, D, PE		12	45 (398.2)

(1) See PowerFlex DC Drive Catalog Number Explanation on page 6, positions 8, 9 and 10 for corresponding drive Hp rating, armature Amp rating, and field Amp rating.

IMPORTANT Certain frame D drives require the use of a terminal adapter kit for terminals U, V, W, C, and D. For details, see Frame D Terminal Adapter Kits on page 20.

PowerFlex DC Drive Armature Voltage Feedback Connections

The armature voltage feedback terminals can be used to monitor the armature voltage of the motor, regardless of the state of a DC contactor or inverting fault device (fuse or breaker).

If these terminals are not connected to the motor armature, jumpers must be installed between A1 to 1A1 and A2 to 1A2 to allow internal calculation of motor speed from armature voltage (needed when no speed feedback device is used). If a DC contactor is used without a speed feedback device present, the drive cannot determine motor speed from the armature voltage feedback signal.

IMPORTANT By default, these terminals are jumpered - 1A1 to A1 and 1A2 to A2. If these terminals are not wired to the motor terminals, the jumpers must be installed.

This terminal block is not present on drives that were shipped from the factory before drives with version 3.001 firmware installed. However, new pulse transformer boards that are shipped as replacement parts from the factory contain this terminal block and can be used with any version of firmware.

Armature Voltage Feedback Terminals

Terminal	Description
1A1	Jumpered to A1 when internal armature voltage feedback is used. Not used when A1 is connected to motor terminal A1.
A1	Voltage feedback from motor terminal A1.
1A2	Jumpered to A2 when internal armature voltage feedback is used. Not used when A2 is connected to motor terminal A2.
A2	Voltage feedback from motor terminal A2.

Armature Voltage Feedback Circuit Wire Sizes and Terminal Specifications

Frame	Terminals	Wire Size and Type(1)	Tightening Torque N•m (lb•in)
A, B & C	1A1, A1, 1A2, A2	24...10 AWG/kcmils	0.5...0.6 (4.4...5.3)
D		22...8 AWG/kcmils	0.8...1.6 (7.1...14.2)

(1) Wire with an insulation rating of 600V or greater is recommended. For more information, see Cable and Wiring Recommendations in the PowerFlex Digital DC Drive User Manual, publication 20P-UM001.

Frame A Armature Voltage Feedback Circuit Terminal Block Location

Bottom of View of Drives

Drive with no fan

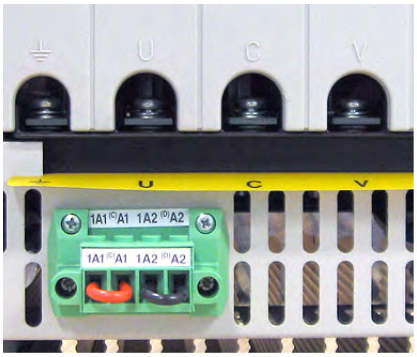

Drive with fan

Shown with terminals jumpered for internal armature voltage feedback.

Frame B Armature Voltage Feedback Circuit Terminal Block Location

Top of Drive

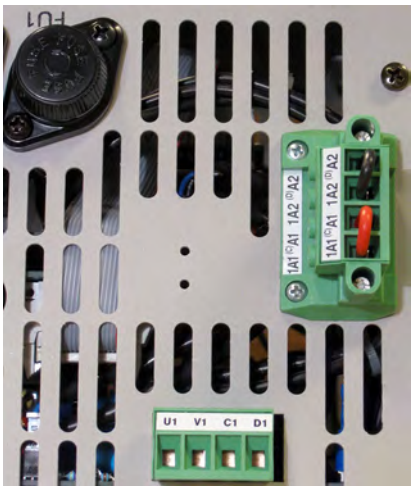

Shown with terminals jumpered for internal armature voltage feedback.

Frame C Armature Voltage Feedback Circuit Terminal Block Location

Bottom of Drive

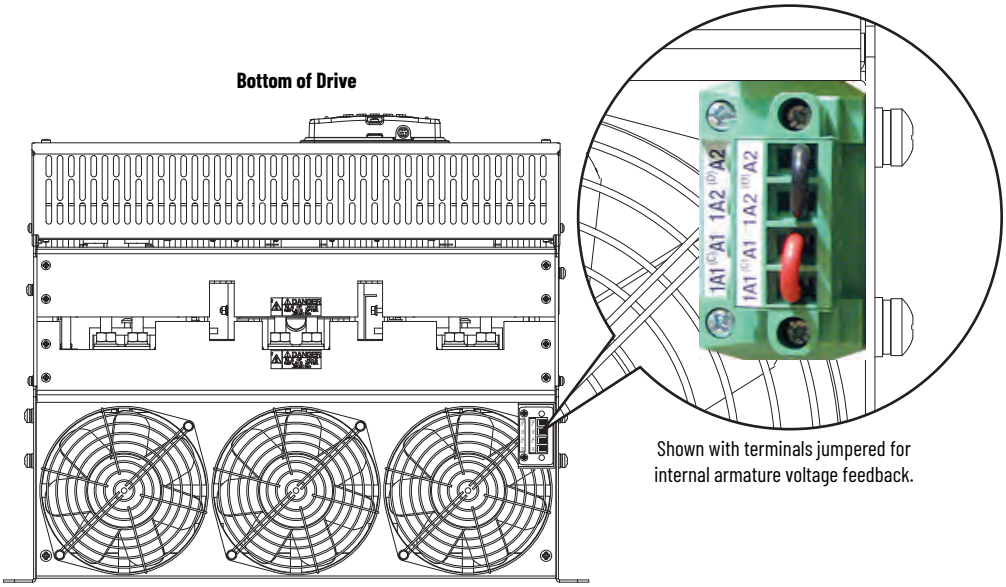

Shown with terminals jumpered for internal armature voltage feedback.

Frame D Armature Voltage Feedback Circuit Terminal Block Location

Bottom of Drive, Left Side

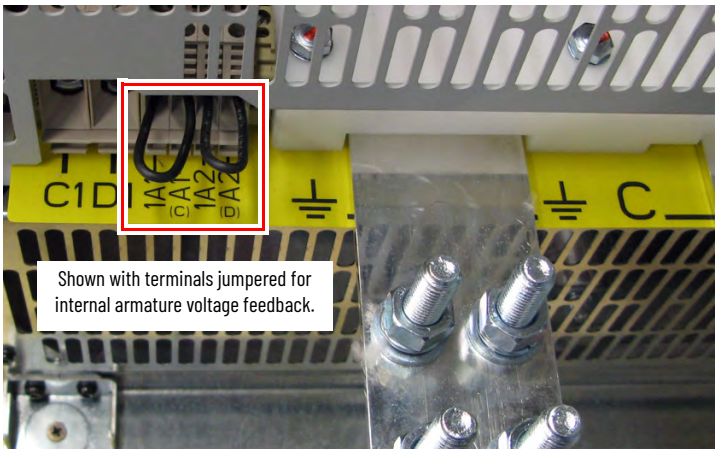

Shown with terminals jumpered for internal armature voltage feedback.

PowerFlex DC Drive Field Converter Connections

For only 575V or 690V AC input drives, a step-down transformer with the following specifications must be installed before the input to the field control circuit (terminals U1, V1):

- For a 150V motor field, use a step-down transformer with a 230VAC secondary
- For a 300V motor field, use a step-down transformer with a 460VAC secondary

Also, If the rated voltage of the DC motor field is not compatible with the field DC output voltage of the drive, an external field control transformer must be used. See the following example for transformer selection information.

Example: 10 Hp, 240V Armature, 17.2 A, 240V Field, 2.0 A motor

a. The field control transformer must have a 230V primary, a 460V secondary, and be single-phase, 60 Hz
b. kVA = 2 A x 460VAC x 1.5 = 1.38 kVA (1.5 kVA is closest)

In addition, the following configuration must be completed in the PowerFlex DC drive:

c. Control board DIP switch S14 must be set to select a value of 2 A.
d. Parameter 374 [Drv Fld Brdg Cur] must be programmed to match DIP switch S14 = "2."
e. Parameter 280 [Nom Mtr Fld amps] must be programmed to the rated motor nameplate field current "2."

Drive Field Converter Terminal Designations

Terminal	Description
U1, V1	Single-phase AC line input power to the field circuit.
C1, D1	DC output power to the motor field.

Frames A and B Field Circuit Terminal Block Locations

Bottom View of Frame A

Top View of Frame B

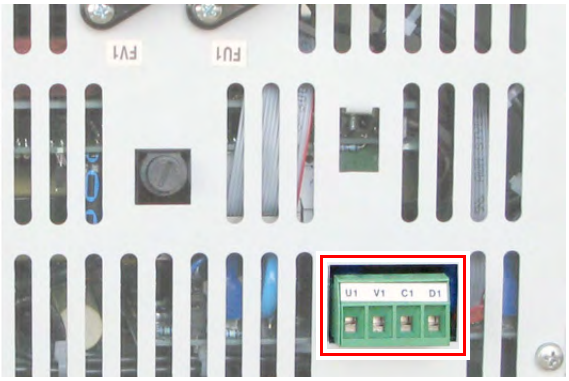

Frame C Field Circuit Terminal Block Location

230V/460V AC Input Frame C, Front View of Drive

575V/690V AC Input Frame C, Left Side of Drive

Frames A...C Field Circuit Wire Sizes and Terminal Specifications

Terminals	Wire Size and Type(1)	Tightening Torque N•m (lb•in)
U1, V1, C1, D1	24...10 AWG/kcmils	0.5...0.8 (4.4...7.1)

(1) For more information, see Cable and Wiring Recommendations in the PowerFlex Digital DC Drive User Manual, publication 20P-UM001.

Frame D Field Circuit Terminal Block Location

Top of Drive, Left Side

Wire routing hole

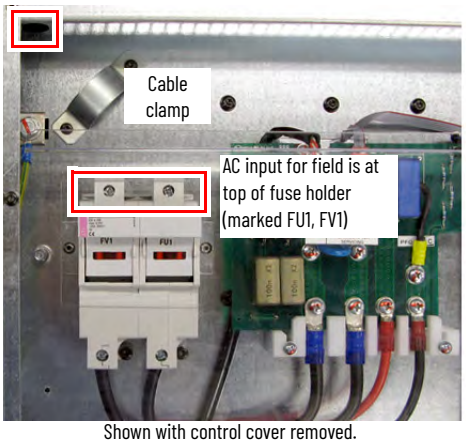

Shown with control cover removed.
Remove control cover to access terminals.

Bottom of Drive, Left Side

Frame D Field Circuit Wire Sizes and Terminal Specifications

Drive Current Rating Code(1)				Terminals	Wire Size(2)	Tightening Torque N•m (lb•in)
230V	460V	575V	690V			
875	830	810	678	U1, V1, C1, D1	6 AWG	4.0 (35.4)
1K0	996	1K0	791			
—	—	1K2	904			
		1K3	1K0			
		1K6	—			
	1K1	—	1K1		2 AWG	
	1K3		1K2			
	1K4		1K4			
	—		1K5			

(1) See PowerFlex DC Drive Catalog Number Explanation on page 6, positions 8, 9 and 10 for corresponding drive Hp rating, armature Amp rating, and field Amp rating.
(2) For more information, see Cable and Wiring Recommendations in the PowerFlex Digital DC Drive User Manual, publication 20P-UM001.

PowerFlex DC Drives and Field Controller Control Circuit Input Power

Supply power to the control circuit through an external 230V AC or 115V AC single-phase power supply. For frames B and C only, a jumper is required between terminals SA and SB for 115V AC control input power. See Frame B SA-SB Terminal Block Location (on all PowerFlex DC Drives and Field Controllers) on page 37 and Frame C SA-SB Terminal Block Location (only on PowerFlex DC Drives) on page 37 for terminal block locations.

Control Circuit Terminal Designations

Terminal	Description
U2	Single-phase AC power for the control circuits.
V2	

Frames A and B Control Circuit Terminal Block Location (on all PowerFlex DC Drives and Field Controllers)

Frame A Drive

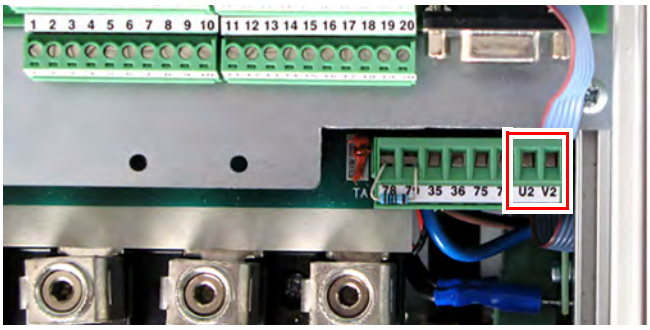

Frame B

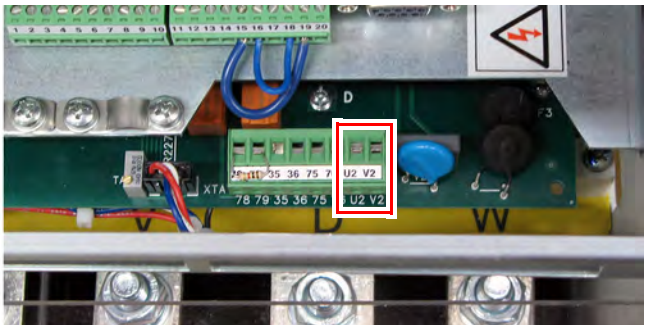

Frame C Control Circuit Terminal Block Location (only on PowerFlex DC Drives)

230V/460V AC Input Frame C

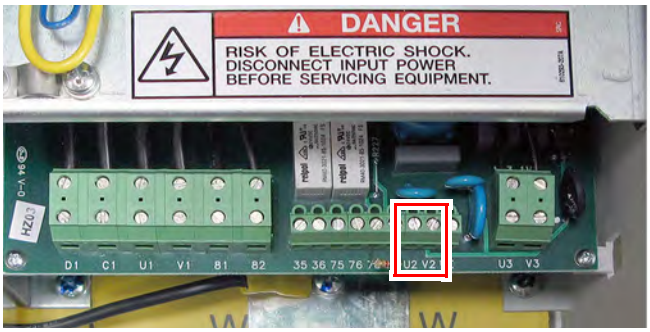

575V/690V AC Input Frame C

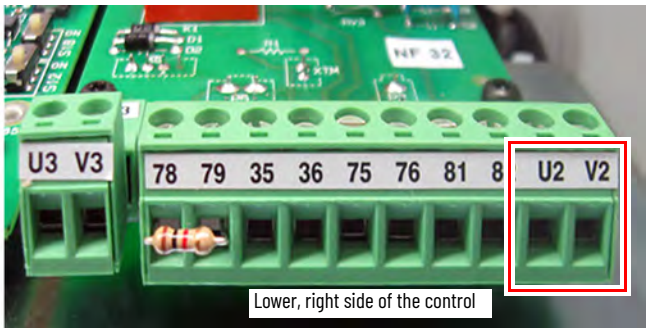

Frame D Control Circuit Terminal Block Location (only on PowerFlex DC Drives)

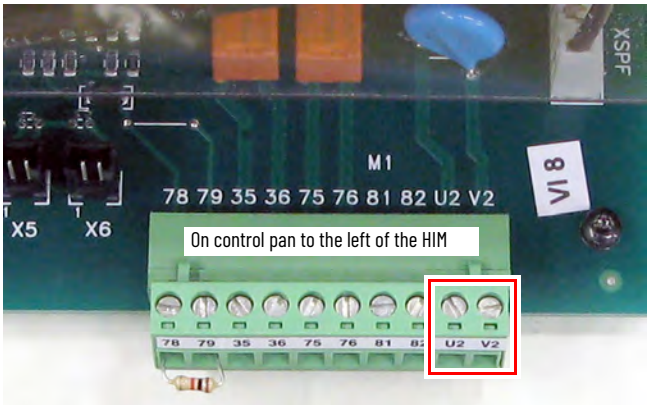

Control Circuit Wire Sizes

Terminals	Wire Size and Type[1]			Tightening Torque N•m (lb•in)
	Flexible (mm^2)	Multicore (mm^2)	AWG	
U2, V2	0.14...1.5	0.14...2.5	26...14	0.5 (4.4)
PE	2.5...10	2.5...10	12...8	2.0 (18.0)

(1) For more information, see Cable and Wiring Recommendations in the PowerFlex Digital DC Drive User Manual, publication 20P-UM001.

Frame B SA-SB Terminal Block Location (on all PowerFlex DC Drives and Field Controllers)

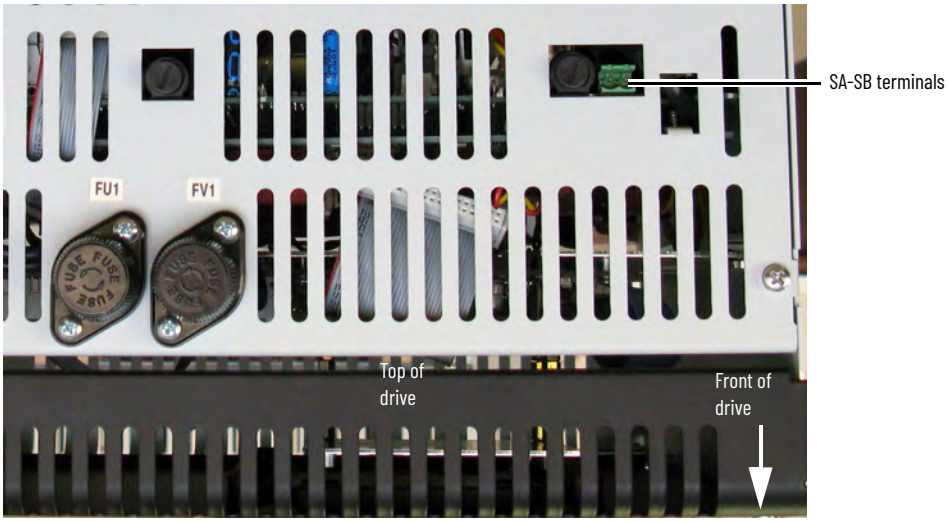

Frame C SA-SB Terminal Block Location (only on PowerFlex DC Drives)

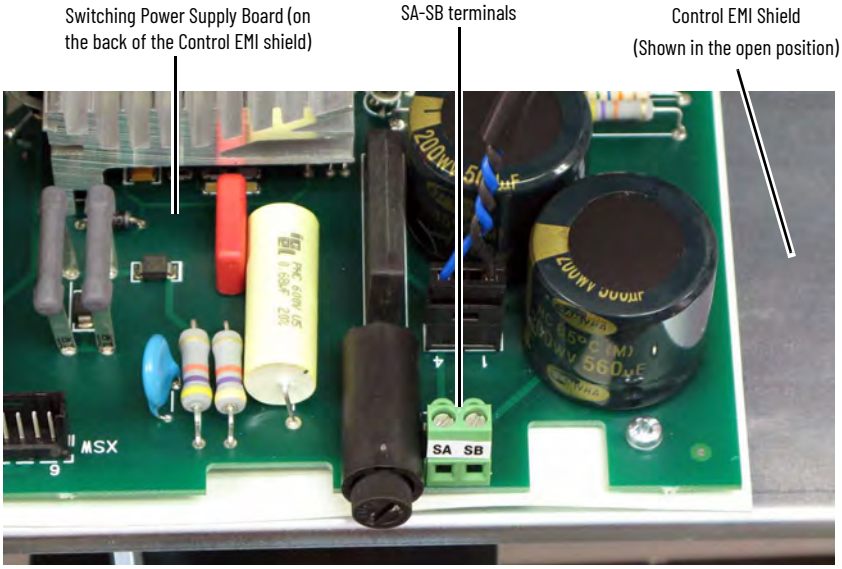

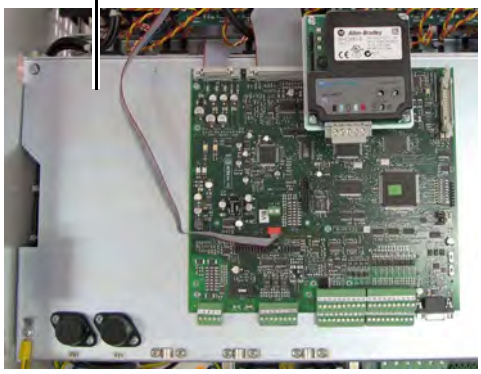

Front of drive that is shown with top protective cover removed.

Frame C Heat Sink Cooling Fan Specifications

Frame C drives require an external 230V AC power supply for the heat sink cooling fans. If sourced from the main 3-phase AC input, the power supply connections must be taken from the primary side of the installed Isolation Transformer or Line Reactor (clean power).

In addition, the fan power input terminals U3 and V3 are required to be short-circuit protected. This protection can be provided by using a circuit breaker or fuses.

- If a circuit breaker is used, it must be rated for the short-circuit available current of the feeder source for this circuit and the inrush current of the fan. Size the circuit breaker to help protect the wiring from the circuit breaker connections to terminals U3 and V3, and not spurious trip or blow from the inrush current.
- If fuses are used, they must be rated for either 230V AC, 2.0 amps (slow blow).

Frame C Heat Sink Cooling Fans Terminal Designations

Terminal	Description	Max Voltage	Max Current
U3	Single-phase AC input power for cooling fans.	230V AC	1 A
V3			

Frame C Heat Sink Cooling Fans Wire Sizes and Terminal Specifications

Terminals	Wire Size and Type[1]			Tightening Torque N•m (lb•in)
	Flexible (mm^2)	Multicore (mm^2)	AWG	
U3, V3	0.14...1.5	0.14...2.5	26...16	0.4 (3.5)

(1) For more information, see Cable and Wiring Recommendations in the PowerFlex Digital DC Drive User Manual, publication 20P-UM001.

Frame C Heat Sink Cooling Fan Terminal Block Locations

230V/460V AC Input Frame C

575V/690V AC Input Frame C

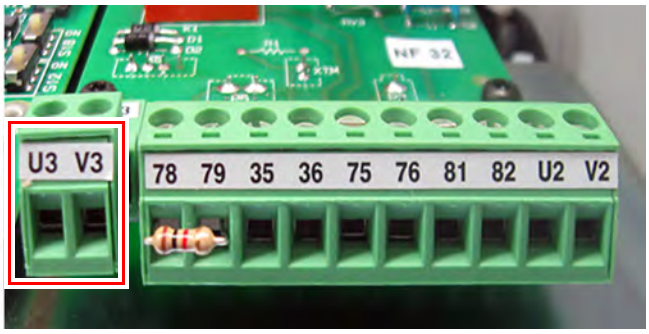

Frame D, Series B and C Heat Sink Cooling Fan Specifications

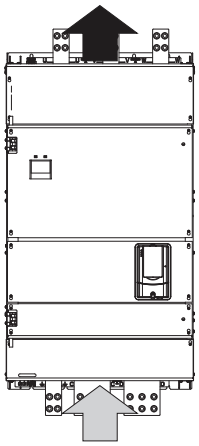

The frame D, series B and C drive cooling fan requires three-phase (50/60 Hz), 400...460V AC input power. If sourced from the main three-phase AC input, the power supply connections must be taken from the primary side of the installed isolation transformer or line reactor (clean power).

IMPORTANT When connecting the fan power wiring, verify that the airflow enters through the bottom and exits through the top of the drive. If the airflow is incorrect, switch the leads on terminals U3 and V3.

The cooling fan power input terminals U3, V3, and W3 are required to be short-circuit protected. This protection can be provided by using a circuit breaker or fuses.

- If a circuit breaker is used, it must be rated for the short-circuit available current of the feeder source for this circuit and the inrush current of the fan. Size the circuit breaker to help protect the wiring from the circuit breaker connections to terminals U3, V3, and W3, and not spurious trip or blow from the inrush current.
- If fuses are used, they must be rated for either 400V AC, 2.5 amps (slow blow), or 460V AC, 3.15 amps (slow blow).

A normally closed (N.C.) contact wired to terminals 31 and 32 of the fan terminal block can be connected to an external device to provide indication of a fan supply failure or can be wired to drive digital input terminals that are configured for 14 "Aux Fault" (via Pars 133...144).

Frame D, Series B, and C Heat Sink Cooling Fan Terminal Designations

Terminal Block	Terminal	Description	AC Voltage	Max Current
	U3	Three-phase AC input power connections	400...460V AC (50/60 Hz)	1.5 A
	V3			
	W3			
	PE	Safety ground	–	–
	31	Normally closed contact	250V AC	1 A
	32			

Frame D, Series B and C Heat Sink Cooling Fan Signal Wire Sizes and Terminal Specifications

Terminals	Wire Size and Type[1]			Tightening Torque N•m (lb•in)
	Flexible (mm^2)	Multicore (mm^2)	AWG	
U3, V3, W3, 31, 32, PE	0.14...1.5	0.14...2.5	28...12	0.5...0.6 (4.4...5.3)

(1) For more information, see Cable and Wiring Recommendations in the PowerFlex Digital DC Drive User Manual, publication 20P-UM001.

Frame D, Series B and C Heat Sink Cooling Fan Terminal Block Location

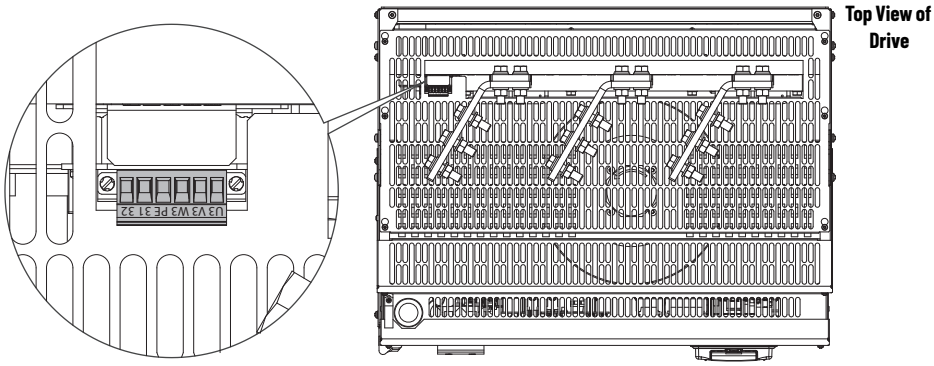

Frame C and D Armature Fuse Signal Terminals

Terminals 81 and 82 on frame C and D drives are connected to the internal armature circuit protection fuses and can be connected to an external device to provide indication that the fuses have opened. Alternatively, terminals 81 and 82 can be wired to drive digital input terminals that are configured for 64 "Invert Flt" (via Pars 133...144).

Armature Fuse Signal Terminal Designations

Terminal	Description	Maximum Voltage	Maximum Current
81	Internal armature fuse intervention signal.	250V AC	1 A
82			

Armature Fuse Signal Wire Size and Terminal Specifications

Terminals	Wire Size and Type(1)			Tightening Torque [N•m (lb•in)]
	Flexible [mm²]	Multicore [mm²]	AWG	
81, 82	0.14...1.5	0.14...2.5	26...16	0.4 (3.5)

(1) For more information, see Cable and Wiring Recommendations in the PowerFlex Digital DC Drive User Manual, publication 20P-UM001.

Frame C Internal Armature Fuse Signal Terminal Block Location

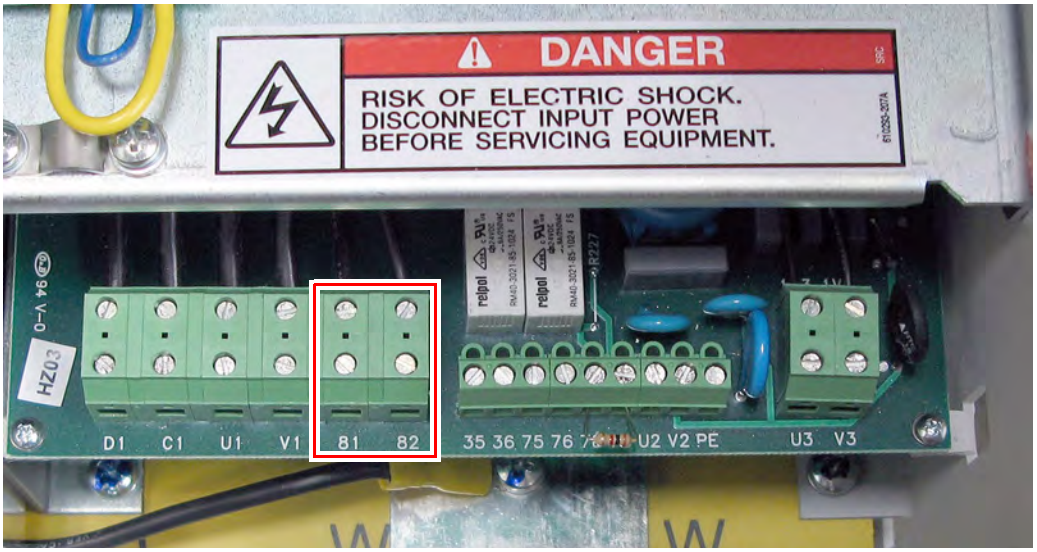

Frame D Internal Armature Fuse Signal Terminal Block Location

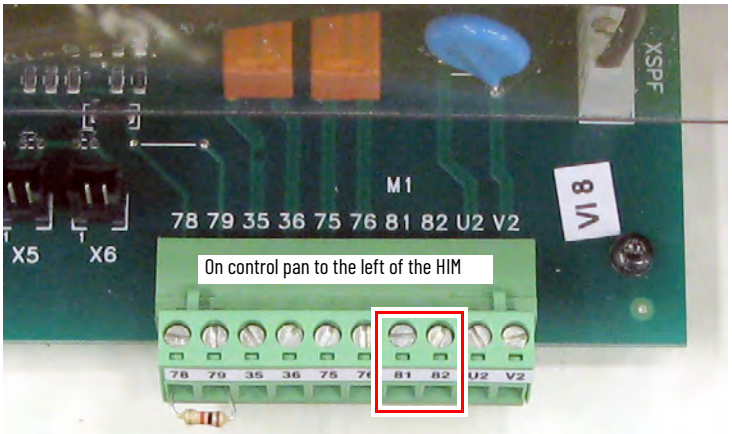

PowerFlex DC Drives and Field Controller Relay Outputs

Terminals 35 and 36 and 75 and 76 are N.O. relay outputs. The relay output between terminals 35 and 36 is configured with parameter 1392 [Relay Out 1 Sel]. The relay output between terminals 75 and 76 is configured with parameter 629 [Relay Out 2 Sel]. See "Using Contactors" in the PowerFlex Digital DC Drive User Manual, publication 20P-UM001, for more information.

PowerFlex DC Drives and Field Controller Thermistors and Thermal Switches

To detect motor overheating and protect the load from overloading, an external, user-supplied thermistor (PTC) or thermal switch must be connected to terminals 78 and 79. The response of the drive to a load over temperature fault is configured in parameter 365 [OverTemp Flt Cfg]. If a temperature sensor is not used, a 1 kΩ resistor must be connected between terminals 78 and 79 (installed at the factory). The instructions for installing a thermal sensor are detailed here.

Thermistors (PTC)

PTC thermistors that are fitted in the load can be connected directly to the drive via terminals 78 and 79. In this case, the 1 kΩ resistor is not required between terminals 78 and 79.

Thermal Switches (Klixon) in the Motor Windings

Klixon type temperature-dependent contacts can disconnect the drive from the load via an external control or can be configured as an external fault using a digital input on drive. They can also be connected to terminals 78 and 79 to indicate the following:

- For a PowerFlex DC drive, to indicate a drive "Motor Over Temp" fault (F16)
- For a PowerFlex DC field controller, to indicate a field controller "PTC Over Temp" fault (F16)

However, this configuration is not recommended due to the noise sensitivity of the current threshold circuitry. If a thermal switch is used, a 1 kΩ resistor must be placed in series between the switch and one of the terminals.

Contact Relay and Thermistor Terminal Designations

Terminal	Description
35	N.O. contact. Configured with parameter 1392 [Relay Out 1 Sel] - set to 25 "Contactor" by default.
36	
75	N.O. contact. Configured with parameter 629 [Relay Out 2 Sel] - set to 5 "Ready" by default.
76	
78	Motor thermistor connections (PTC)
79	

Frames A and B Contact Relay and Thermistor Terminal Block Locations

Frame A

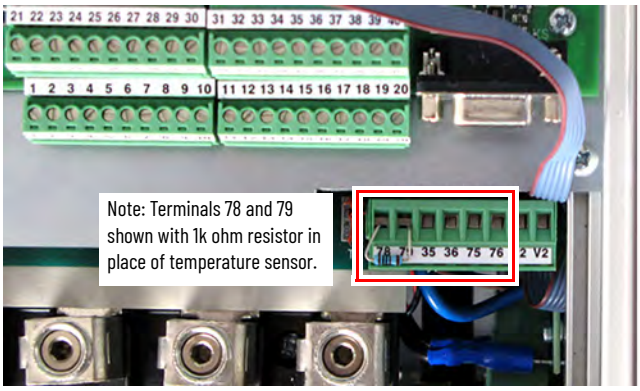

Frame B

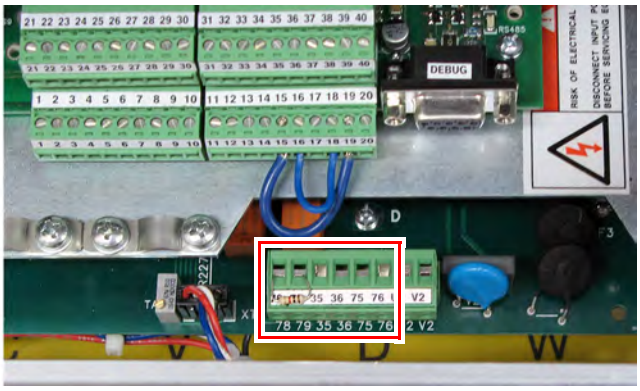

Frame C Contact Relay and Thermistor Terminal Block Locations (only for PowerFlex DC Drives)

230V/460V AC Input Frame C

575V/690V AC Input Frame C

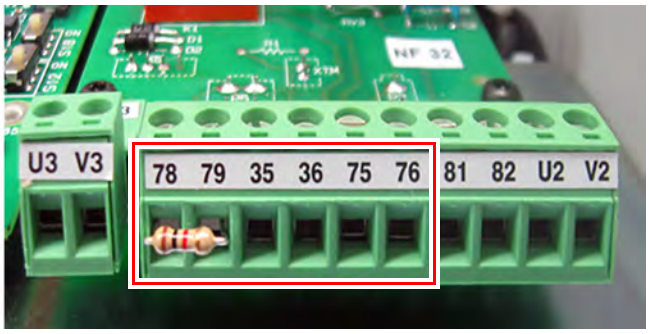

Frame D Contact Relay and Thermistor Terminal Block Locations (only for PowerFlex DC Drives)

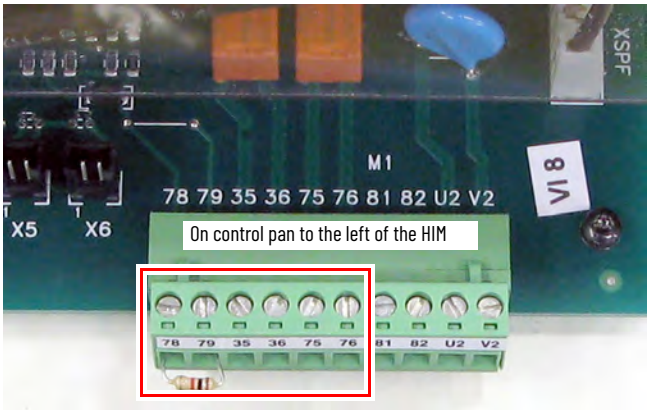

230V/460V AC Input Frame C

575V/690V AC Input Frame C

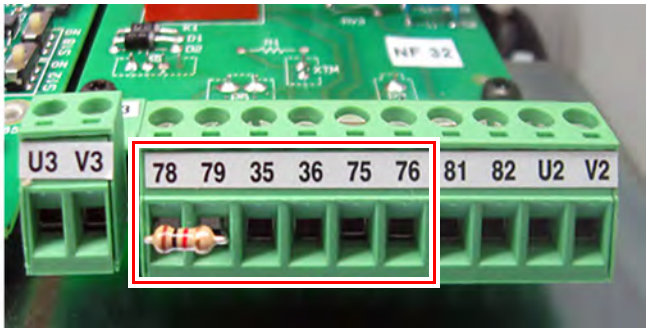

Recommended Signal Wire Size for Relay Outputs and Thermistor/Thermal Switch Terminals

Signal Type	Terminals	Wire Size and Type(1)			Tightening Torque N•m (lb•in)
		Flexible (mm^2)	Multicore (mm^2)	AWG	
Relay Outputs	35 & 36, 75 & 76	0.140...1.500	0.140...2.500	26...14	0.5 (4.4)
Thermistor and Thermal Switches	78 & 79				

(1) For more information, see Cable and Wiring Recommendations in the PowerFlex Digital DC Drive User Manual, publication 20P-UM001.

PowerFlex DC Drives and Field Controller I/O Signal and Control Wiring

Eight digital inputs, four digital outputs, three analog inputs, and two analog outputs are available on the standard I/O terminal blocks that are provided with the drive. One digital input (1...8) must be configured for "Enable".

More digital and analog I/O is available when using the optional I/O expansion circuit board. See Appendix F - 'Optional Analog and Digital I/O Expansion Circuit Board,' in the PowerFlex Digital DC Drive User Manual, publication 20P-UM001, for more information. You can also use the optional 115V AC converter circuit board to convert 115V AC to 24V DC digital inputs signals to interface with the digital inputs on the standard I/O terminal blocks. See Appendix G Optional 115V AC to 24V DC I/O Converter Circuit Board in the PowerFlex Digital DC Drive User Manual, publication 20P-UM001, for more information. All I/O terminal blocks are on the control board.

I/O Terminal Block Locations

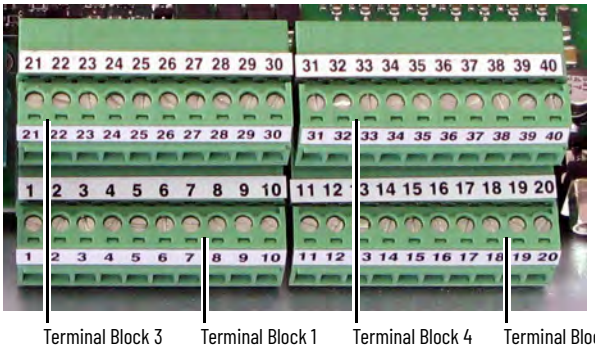

I/O Terminal Block 1 Designations

	No.	Signal	Description	Factory Default		Related Parameter
				DC Drive	Field Controller	
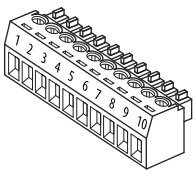	1	Analog Input 1 (+)	Isolated[1], bipolar, differential, ±10V / 0...20 mA, or 4...20 mA. **Important:** 0...20 mA or 4...20 mA operation requires that switch S9, S10, and S11 on the Control board be in the "Off" position. Drive damage can occur if the switch is not in the correct position that is based on the type of input signal. See "DIP switch and Jumper Settings" in the PowerFlex Digital DC Drive User Manual, publication 20P-UM001. Max ±10V, Max 0.25 mA.	1 "Speed Ref A"	5 "Current Ref A"	70 [Anlg In1 Sel]
	2	Analog Input 1 (-)				
	3	Analog Input 2 (+)		0 "Off"		75 [Anlg In2 Sel]
	4	Analog Input 2 (-)				
	5	Analog Input 3 (+)		0 "Off"		80 [Anlg In3 Sel]
	6	Analog Input 3 (-)				
	7	+10V Pot Reference	2...5k Ω load. Max ±10V, Max 10 mA.	–		–
	8	-10V Pot Reference				
	9	Pot Common	For (+) and (-) 10V pot references.			
	10	PE ground	PE ground to drive chassis.			

(1) Differential Isolation - External source must be maintained at less than 160V with respect to PE. Input provides high common mode immunity.

I/O Terminal Block 2 Designations

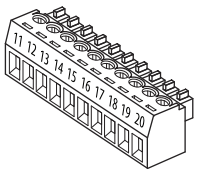

No.	Signal	Description	Factory Default		Related Parameter
			DC Drive	Field Controller	
11	Internal 0V		–		–
12	Digital Input 1	Max Volt. +30V, Max Cur. 15V/3.2mA, 24V/5mA, and 30V/6.4mA. A digital input (1...8) must be configured for "Enable".	2 "Stop/CF"		133 [Digital In1 Sel]
13	Digital Input 2		3 "Start"		134 [Digital In2 Sel]
14	Digital Input 3		11 "Jog"		135 [Digital In3 Sel]
15	Digital Input 4		1 "Enable"		136 [Digital In4 Sel]
16	Digital Input Common	**Important:** When using the internal +24V DC supply (terminal 19) for digital inputs 1...4, you must connect the digital input common (terminal 16) to the +24V supply common (terminal 18).	–		–
17	Not Used				
18	24V Supply Common	Common for the internal power supply.			
19	Internal +24V DC Supply	Drive supplied +24V DC I/O power. Max. +20...30V, 200 mA **Tip:** The total current draw is the sum of encoder power, digital outputs, and any other loads that are connected to terminal 19.			
20	PE ground	PE ground to drive chassis.			

I/O Terminal Block 3 Designations

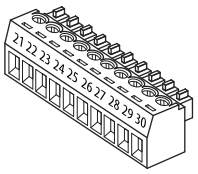

No.	Signal	Description	Factory Default		Related Parameter
			DC Drive	Field Controller	
21	Analog Output 1 (+)	Max. ±10V, Max. 5 mA.	12 "Motor Speed"	12 "Volt Fdbk"	66 [Anlg Out1 Sel]
22	Analog Output 1 (–)				
23	Analog Output 2 (+)		13 "Motor Curr"	13 "Output Curr"	67 [Anlg Out2 Sel]
24	Analog Output 2 (–)				
25	Digital Output Common		–		–
26	Digital Output 1	Max. +30V, Max 50 mA	5 "Ready"		145 [Digital Out1 Sel]
27	Digital Output 2		9 "Fault"		146 [Digital Out2 Sel]
28	Digital Output 3		2 "Spd Thresh"	2 "Vlt Thresh"	147 [Digital Out3 Sel]
29	Digital Output 4		4 "CurrentLimit"		148 [Digital Out4 Sel]
30	Digital Output + 24V DC Source	Tie point for the internal supply or customer supplied voltage for the digital outputs. Max. +30V DC, 80 mA. **Important**: When using the internal +24V DC supply (terminal 19) for digital outputs 1...4, you must connect terminal 19 to terminal 30 and the digital output common (terminal 25) to the +24V supply common (terminal 18).	–		–

I/O Terminal Block 4 Designations

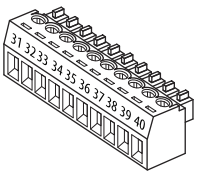

No.	Signal	Description	Factory Default		Related Parameter
			DC Drive	Field Controller	
31	Digital Input 5	Max Volt. +30V, Max Cur. 15V/3.2mA, 24V/5mA, and 30V/6.4mA. A digital input (1...8) must be configured for "Enable".	17 "Speed Sel 1"	17 "Volt Sel 1"	137 [Digital In5 Sel]
32	Digital Input 6		18 "Speed Sel 2"	18 "Volt Sel 2"	138 [Digital In6 Sel]
33	Digital Input 7		19 "Speed Sel 3"	19 "Volt Sel 3"	139 [Digital In7 Sel]
34	Digital Input 8		31 "Contactor"		140 [Digital In8 Sel]
35	Digital Input Common	**Important:** When using the internal +24V DC supply (terminal 19) for digital inputs 5...8, you must connect the digital input common (terminal 35) to the +24V supply common (terminal 18).	–		–
36...40	Not Used				

Recommended Signal Wire Size for Analog I/O and Digital I/O

Signal Type	Terminal Block (Terminals)	Wire Size and Type[1]			Tightening Torque N•m (lb•in)
		Flexible (mm^2)	Multicore (mm^2)	AWG	
Analog and Digital I/O	TB1...4 (1...40)	0.140...1.500	0.140...1.500	26...16	0.4 (3.5)

(1) For more information, see Cable and Wiring Recommendations in the PowerFlex Digital DC Drive User Manual, publication 20P-UM001.

PowerFlex DC Drives Digital Encoder Terminal Block

Always connect the encoder connection cables directly to the terminals on the encoder terminal block. The encoder cable must be composed of twisted pairs with the shield connected to the shield ground on the drive side. Do not connect the shield to ground on the motor side. In some cases (that is, cable lengths that exceed 100 meters), it can be necessary to ground the shield of each twisted-pair on the power supply. See Appendix A of the PowerFlex Digital DC Drive User Manual, publication 20P-UM001, for Digital Encoder specifications.

Digital Encoder Terminal Designations

Terminal Block	Label	Signal	Description
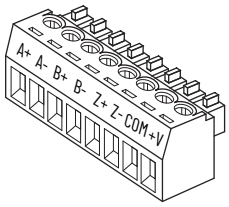	A+	Encoder A	Single ended or quadrature A input
	A-	Encoder A (NOT)	
	B+	Encoder B	Dual channel quadrature B input
	B-	Encoder B (NOT)	
	Z+	Encoder Z	Pulse, marker, or registration input[1]
	Z-	Encoder Z (NOT)	
	COM	+5/12...15V[2] DC Return	Internal power common
	+V	+5/12...15V[2] DC Power	Internal power source 200 mA

(1) Selectable via switch S20 on the Control board. See "DIP Switch and Jumper Settings" in the PowerFlex Digital DC Drive User Manual, publication 20P-UM001, for more information.
(2) Selectable via switch S21 on the Control board. See "DIP Switch and Jumper Settings" in the PowerFlex Digital DC Drive User Manual, publication 20P-UM001, for more information.

Digital Encoder Terminal Block Location

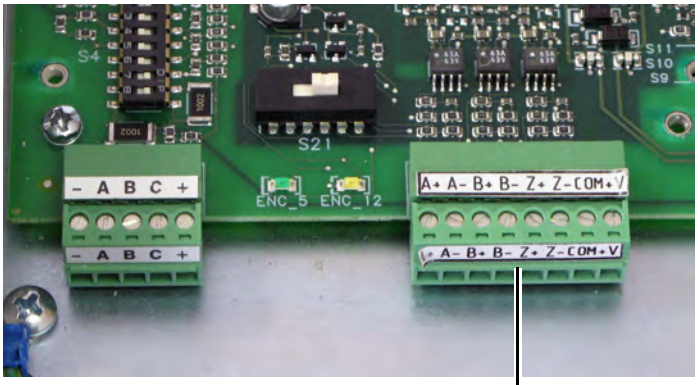

Digital Encoder terminal block

Sample Encoder Power Wiring

Power Source	Connection Example
Internal Drive Power (1) Internal (drive) +5/12...15V DC, 200 mA	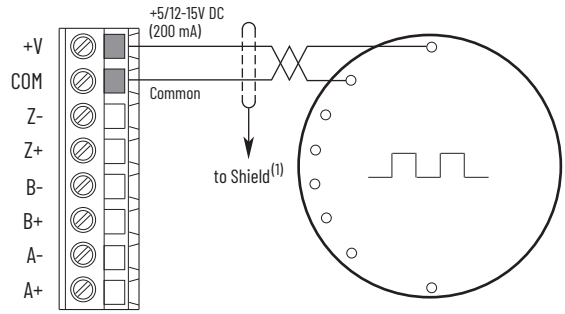
External Power Source	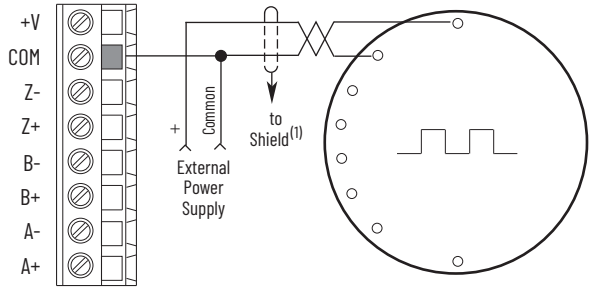

(1) Shield connection is on the drive Control EMI Shield. See Digital Encoder Terminal Block Location on page 45.

Sample Encoder Signal Wiring

Encoder Signal	Connection Example
Single-Ended, Dual Channel	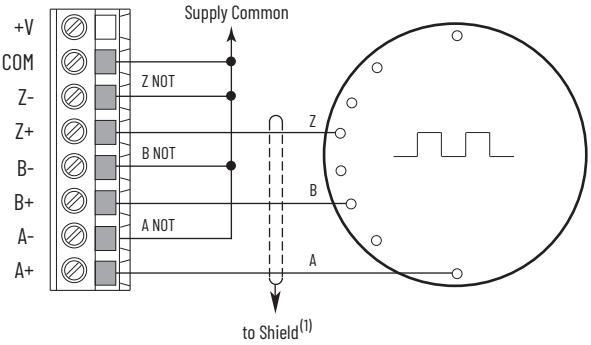
Differential, Dual Channel	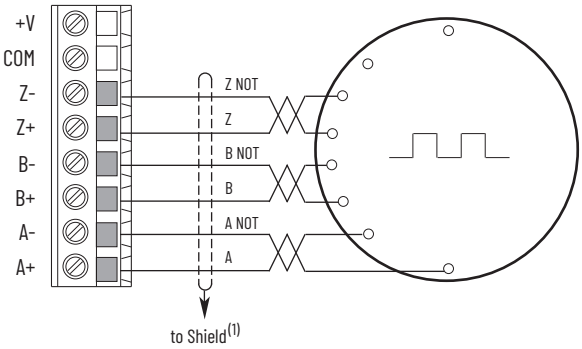

PowerFlex DC Drives DC Analog Tachometer Terminal Block

ATTENTION: The drive can overspeed if DIP switch S4 is set incorrectly, or the tachometer is wired incorrectly. Failure to do so could result in damage to, or destruction of, the equipment.

DC Analog Tachometer Terminal Designations

	No.	Signal	Description
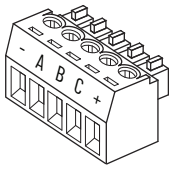	–	Negative input	–
	A	(Not Used)	
	B		
	C		
	+	Positive input Feedback polarity is determined during the startup routine.	22.7 / 45.4 / 90.7 / 181.6 / 302.9V(1) max voltage 8 mA max current

(1) Maximum voltage depends on the configuration of DIP switch S4. For information on jumper settings, see the PowerFlex® Digital DC Drive User Manual, publication 20P-UM001.

Analog Tachometer Terminal Block Location

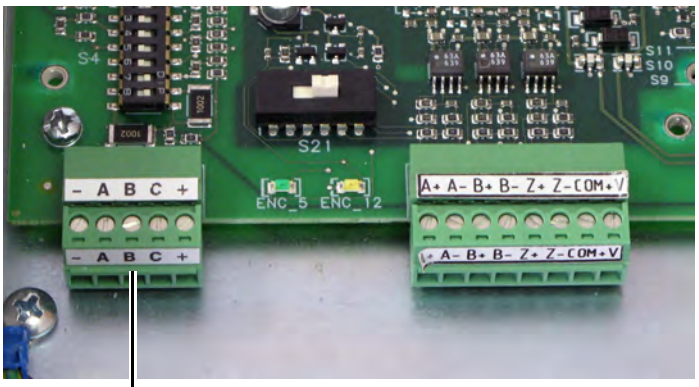

Analog Tachometer terminal block

Recommended Signal Wire Size for DC Analog Tachometer

Signal Type	Terminal Block (Terminals)	Wire Type and Size(1)			Tightening Torque N•m (lb•in)
		Flexible (mm^2)	Multicore (mm^2)	AWG	
DC Analog Tach	M3 (+ and –)	0.140...1.500	0.140...1.500	26...16	0.4 (3.5)

(1) See Cable and Wiring Recommendations in the PowerFlex Digital DC Drive User Manual, publication 20P-UM001.

PowerFlex DC Drives Resolver Feedback Module

The resolver feedback module (catalog number 20P-RES-A0), which provides a drive interface to a selection of compatible resolvers, must be ordered and purchased separately from the drive. The resolver option module includes the PowerFlex DC Drive Resolver Feedback Module Installation Instructions, publication 20P-IN071, which provides installation and wiring information. See 'Resolver Type Selection' in the PowerFlex Digital DC Drive User Manual, publication 20P-UM001, for more information on compatible resolvers. The PowerFlex DC drive is not CE Certified when the resolver feedback module is installed in the drive.

PowerFlex DC Drives and Field Controller Circuit Protection

The tables on the following pages provide the fuses that are required to help protect the armature and field circuits. Externally mounted fuses (as indicated in Frame A and B Fuse Designations) must be sourced separately when installing the drive. Internally mounted fuses are provided with the drive. See page 53 for frames C and D fuse information.

PowerFlex DC Drives Frame A and B Fuse Information

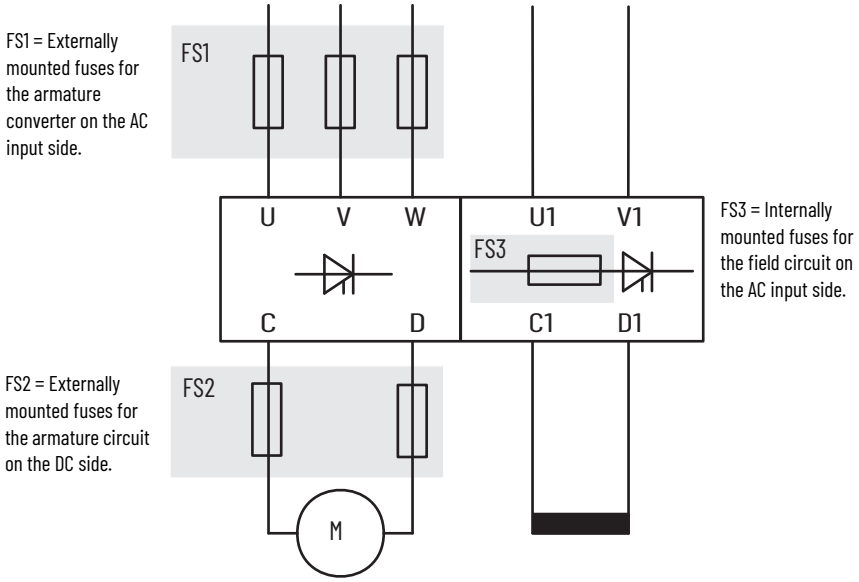

PowerFlex DC Drives Frames A and B AC Input Line Fuses

AC input line fuses are externally mounted for frame A and B drives and must be sourced separately. See Fuse Code FS1 in PowerFlex DC Drives Frame A and B Fuse Information on page 48.

230V AC Input Drives

Frame	Drive Current Rating Code	DC Amps	AC Line Amps	Bussmann		Mersen	
				Ferrule FWP Type	North American FWP Type	Ferrule A70QS Type	North American A70P / A70QS Type
A	7P0	7	5.7	FWP-10A14F	FWP-10B	A70QS10-14F	A70P10-4
	9P0	9	7.4	FWP-15A14F	FWP-15B	A70QS16-14F	A70P15-4
	012	12	9.8	FWP-20A14F	FWP-20B	A70QS20-14F	A70P20-4
	020	20	16	FWP-25A14F	FWP-25B	A70QS25-14F	A70P25-4
	029	29	24	FWP-40A22F	FWP-40B	A70QS40-22F	A70QS40-4
	038	38	31	FWP-63A22F	FWP-60B	A70QS63-22F	A70QS60-4
	055	55	45	FWP-80A22F	FWP-80B	A70QS80-22F	A70QS80-4
	073	73	60	–	FWP-100A	–	A70QS100-4K
	093	93	76		FWP-150A		A70QS150-4K
	110	110	90		FWP-175A		A70QS175-4K
B	146	146	119	–	FWP-250A	–	A70QS250-4
	180	180	147		FWP-300A		A70QS300-4
	218	218	178		FWP-350A		A70QS350-4
	265	265	217		FWP-400A		A70QS400-4
	360	360	294		FWP-600A		A70QS600-4K
	434	434	355		FWP-600A		A70QS600-4

460V AC Input Drives

Frame	Drive Current Rating Code	DC Amps	AC Line Amps	Bussmann		Mersen	
				Ferrule FWP Type	North American FWP Type	Ferrule A70QS Type	North American A70P / A70QS Type
A	4P1	4.1	3.3	FWP-10A14F	FWP-10B	A70QS10-14F	A70P10-4
	6P0	6	4.9	FWP-10A14F	FWP-10B	A70QS10-14F	A70P10-4
	010	10	8.2	FWP-20A14F	FWP-20B	A70QS20-14F	A70P25-4
	014	14	11.4	FWP-25A14F	FWP-25B	A70QS25-14F	A70P25-4
	019	19	15.5	FWP-25A14F	FWP-25B	A70QS25-14F	A70P25-4
	027	27	22.1	FWP-40A22F	FWP-40B	A70QS40-22F	A70QS40-4
	035	35	28.6	FWP-63A22F	FWP-60B	A70QS63-22F	A70QS60-4
	045	45	36.8	FWP-80A22F	FWP-80B	A70QS80-22F	A70QS80-4
	052	52	42.5	FWP-80A22F	FWP-80B	A70QS80-22F	A70QS80-4
	073	73	59.6	–	FWP-100A	–	A70QS100-4K
	086	86	70.3		FWP-150A		A70QS150-4K
	100	100	81.7		FWP-175A		A70QS175-4K
	129	129	105.4		FWP-175A		A70QS175-4K
B	167	167	136.4		FWP-300A		A70QS300-4
	207	207	169.1		FWP-350A		A70QS350-4
	250	250	204.3		FWP-400A		A70QS400-4
	330	330	269.6		FWP-600A		A70QS600-4K
	412	412	336.6		FWP-600A		A70QS600-4

575V AC Input Drives

Frame	Drive Current Rating Code	DC Amps	AC Line Amps	Bussmann	Mersen
				North American FWP Type	North American A70QS Type
B	067	67.5	55.1	FWP-100A	A70QS100-4
	101	101.3	82.7	FWP-175A	A70QS175-4K
	135	135	110.3	FWP-225A	A70QS225-4
	270	270	220.6	FWP-450A	A70QS450-4
	405	405	330.9	FWP-600A	A70QS600-4K

Frame A and B Armature DC Output Fuses

Armature DC output fuses are externally mounted for frame A and B drives and must be sourced separately. These fuses are required on four quadrant drives only, but highly recommended on two quadrant drives. See Fuse Code FS2 in PowerFlex DC Drives Frame A and B Fuse Information on page 48.

230V AC Input Drives

Frame	Drive Current Rating Code	DC Amps	AC Line Amps	Bussmann		Mersen	
				Ferrule FWP Type	North American FWP Type	Ferrule A70QS Type	North American A70P / A70QS Type
A	7P0	7	5.7	FWP-15A14F	FWP-15B	A70QS16-14F	A70P15-4
	9P0	9	7.4	FWP-20A14F	FWP-20B	A70QS20-14F	A70P20-4
	012	12	9.8	FWP-25A14F	FWP-25B	A70QS25-14F	A70P25-4
	020	20	16	FWP-40A14F	FWP-40B	A70QS40-14F	A70QS40-4
	029	29	24	FWP-63A22F	FWP-60B	A70QS63-22F	A70QS60-4
	038	38	31	FWP-80A22F	FWP-80B	A70QS80-22F	A70QS80-4
	055	55	45	–	FWP-125A	–	A70QS125-4K
	073	73	60	–	FWP-150A	–	A70QS150-4K
	093	93	76	–	FWP-200A	–	A70QS200-4K
	110	110	90	–	FWP-225A	–	A70QS250-4
B	146	146	119	–	FWP-300A	–	A70QS300-4
	180	180	147	–	FWP-350A		A70QS350-4
	218	218	178	–	FWP-450A	–	A70QS450-4
	265	265	217	–	FWP-600A	–	A70QS600-4K
	360	360	294	–	FWP-700A	–	A70QS700-4
	434	434	355	–	FWP-900A	–	A70P900-4

460V AC Input Drives

Frame	Drive Current Rating Code	DC Amps	AC Line Amps	Bussmann		Mersen	
				Ferrule FWP Type	North American FWP Type	Ferrule A70QS Type	North American A70P / A70QS Type
A	4P1	4.1	3.3	FWP-10A14F	FWP-10B	A70QS10-14F	A70P10-4
	6P0	6	4.9	FWP-15A14F	FWP-15B	A70QS16-14F	A70P15-4
	010	10	8.2	FWP-20A14F	FWP-20B	A70QS20-14F	A70P20-4
	014	14	11.4	FWP-30A14F	FWP-30B	A70QS32-14F	A70P30-4
	019	19	15.5	FWP-40A14F	FWP-40B	A70QS40-14F	A70QS40-4
	027	27	22.1	FWP-63A22F	FWP-60B	A70QS63-22F	A70QS60-4
	035	35	28.6	FWP-80A22F	FWP-70B	A70QS80-22F	A70QS70-4
	045	45	36.8	FWP-100A22F	FWP-90B	–	A70QS90-4
	052	52	42.5	FWP-100A22F	FWP-100B	–	A70QS100-4
	073	73	59.6	–	FWP-150A	–	A70QS150-4K
	086	86	70.3	–	FWP-175A	–	A70QS175-4K
	100	100	81.7	–	FWP-200A	–	A70QS200-4K
	129	129	105.4	–	FWP-250A	–	A70QS250-4
B	167	167	136.4	–	FWP-350A	–	A70QS350-4
	207	207	169.1	–	FWP-400A	–	A70QS400-4
	250	250	204.3	–	FWP-500A	–	A70QS500-4K
	330	330	269.6	–	FWP-700A	–	A70QS700-4
	412	412	336.6	–	FWP-800A	–	A70QS800-4

575V AC Input Drives

Frame	Drive Current Rating Code	DC Current [A]	AC Line Current [A]	Bussmann	Mersen
				North American FWP Type	North American A70P / A70QS Type
B	067	67.5	55.1	FWP-125A	A70QS125-4K
	101	101.3	82.7	FWP-200A	A70QS200-4K
	135	135	110.3	FWP-250A	A70QS250-4
	270	270	220.6	FWP-600A	A70QS600-4K
	405	405	330.9	FWP-800A	A70QS800-4

Field Controller Frames A and B AC Input Line Fuses

AC input line fuses are externally mounted for frame A and B drives and must be sourced separately.

Cat. No.	Frame Size	DC Amps	AC Line Amps	Bussman		Mersen	
				Ferrule FWP Type	North American FWP Type	Ferrule A70QS Type	North American A70P / A70QS Type
23PFCx017	A	17	14	FWP-25A14F	FWP-25B	A70QS25-14F	A70P25-4
23PFCx060		60	49	FWP-80A22F	FWP-80B	A70QS80-22F	A70QS80-4
23PFCx120		120	98	–	FWP-150A	–	A70QS150-4K
23PFCx245	B	245	201		FWP-300A		A70QS300-4
23PFCx365		365	299		FWP-400A		A70QS400-4
23PFCx570		570	467		FWP-600A		A70QS600-4

PowerFlex DC Drive Frame A and B Field Circuit Fuses

Field circuit fuses are internally mounted and provided with the drive. See Fuse Code FS3 in PowerFlex DC Drives Frame A and B Fuse Information on page 48. Also, see PowerFlex DC Drive Frame A Field AC Input Line Fuses Location on page 52 and PowerFlex DC Drive Frame B Field AC Input Line Fuses Location on page 53 for fuse locations.

230V AC Input Drives

Frame	Drive Current Rating Code	Field Amps	Type	Quantity	Bussmann	Mersen	SIBA
A	7P0	10	6 x 32 mm	2	FWH-016A6F	E085449	70 125 40.16
	9P0						
	012						
	020						
	029						
	038						
	055						
	073	14					
	093						
	110						
B	146	20	10 x 38 mm	2	FWC-25A10F	A60Q25-2	60 033 05.25
	180						
	218						
	265						
	360						
	434						

460V AC Input Drives

Frame	Drive Current Rating Code	Field Amps	Type	Quantity	Bussmann	Mersen	SIBA
A	4P1	10	6 x 32 mm	2	FWH-016A6F	E085449	70 125 40.16
	6P0						
	010						
	014						
	019						
	027						
	035						
	045						
	052						
	073	14					
	086						
	100						
	129						
B	167	20	10 x 38 mm	2	FWC-25A10F	A60Q25-2	60 033 05.25
	207						
	250						
	330						
	412						

575V AC Input Drives

Frame	Drive Current Rating Code	Field Amps	Type	Quantity	Bussmann	Mersen	SIBA
B	067	20	10 x 38 mm	2	FWC-25A10F	A60Q25-2	60 033 05.25
	101						
	135						
	270						
	405						

PowerFlex DC Drive Frame A Field AC Input Line Fuses Location

Bottom View of Drive with Fan

Bottom View of Drive without Fan

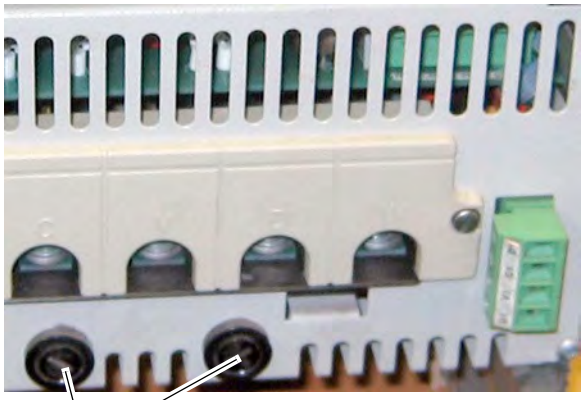

Field circuit fuses

PowerFlex DC Drive Frame B Field AC Input Line Fuses Location

Top View of Drive

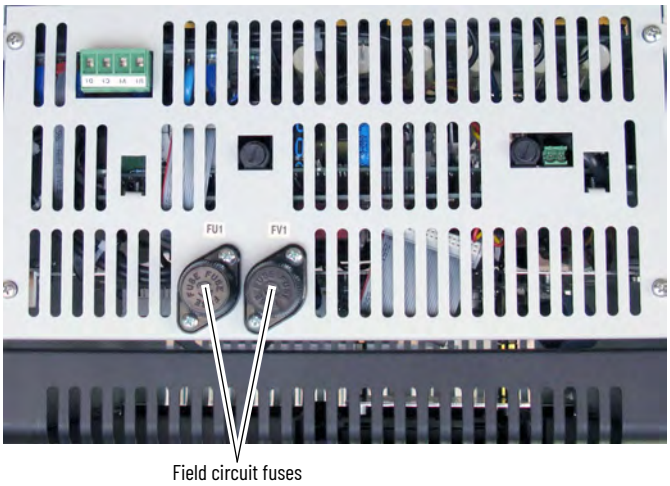

PowerFlex DC Drive Frame C and D Fuse Information

All fuses for armature and field circuit protection are internally mounted and provided with frame C and D drives.

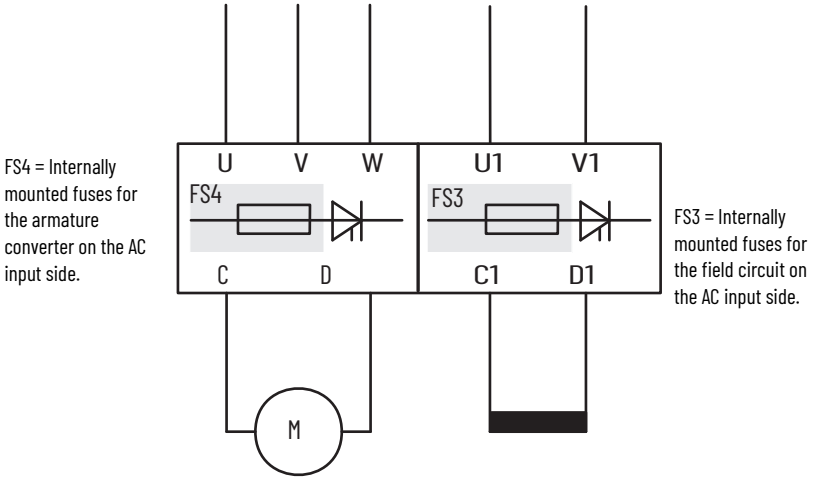

Frame C and D Field Circuit Fuses

Field circuit fuses for frames C and D drives are internally mounted (labeled FU1 and FV1) and provided with the drive. See Fuse Code FS3 in PowerFlex DC Drive Frame C and D Fuse Information on page 53. Also, see PowerFlex DC Frame C and D Drives Field Circuit Fuse Locations on page 54 and Fuses for Regenerative Frame C and D Drives on page 55 for locations.

230V AC Input Drives

Frame	Drive Current Rating Code	Field Amps	Type	Qty	Bussmann	Mersen	SIBA
C	521	20	10 x 38 mm	2	FWC-25A10F	A60Q25-2	6003305.25
D	875	40	22 x 58 mm		FWP-50A22F	A70QS50-22F	5014006.50
	1K0						

460V AC Input Drives

Frame	Drive Current Rating Code	Field Amps	Type	Qty	Bussmann	Mersen	SIBA
C	495	20	10 x 38 mm	2	FWC-25A10F	A60Q25-2	6003305.25
	667					A60Q25-8	
D	830	40	22 x 58 mm		FWP-50A22F	A70QS50-22F	5014006.50
	996						
	1K1	70			FWP-100A22F	A70QS100-22F	5014006.100
	1K3						
	1K4						

575V AC Input Drives

Frame	Drive Current Rating Code	Field Amps	Type	Qty	Bussmann	Mersen	SIBA
C	540	20	10 x 38 mm	2	FWC-25A10F	A60Q25-2	6003305.25
	675					A60Q25-8	
D	810	40	22 x 58 mm		FWP-50A22F	A70QS50-22F	5014006.50
	1K0						
	1K2						
	1K3						
	1K6						

690V AC Input Drives

Frame	Drive Current Rating Code	Field Amps	Type	Qty	Bussmann	Mersen	SIBA
C	452	20	10 x 38 mm	2	FWC-25A10F	A60Q25-2	6003305.25
	565					A60Q25-8	
D	678	40	22 x 58 mm		FWP-50A22F	A70QS50-22F	5014006.50
	791						
	904						
	1K0						
	1K1	70			FWP-100A22F	A70QS100-22F	5014006.100
	1K2						
	1K4						
	1K5						

PowerFlex DC Frame C and D Drives Field Circuit Fuse Locations

Frame C Drive

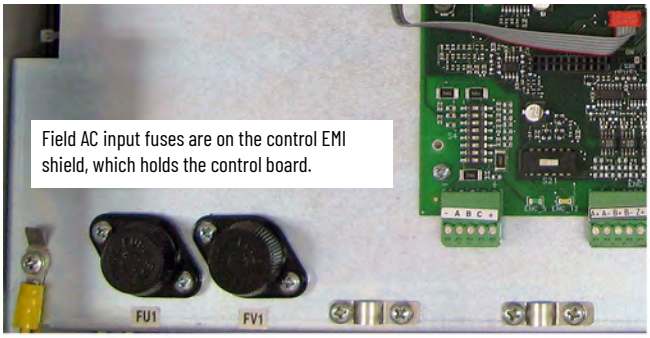

Frame D Drive

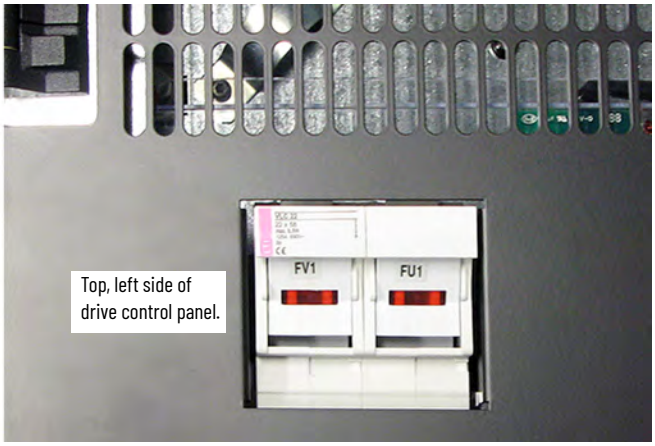

Fuses for Regenerative Frame C and D Drives

Leg fuses are internally mounted and provided with frames C and D drives. See Fuse Code FS4 in PowerFlex DC Drive Frame C and D Fuse Information on page 53. Also, see Frame C Regenerative Drive - Leg Fuse Location and Frame D Regenerative Drive - Leg Fuse Location on page 56.

Leg Fuses - 230V AC Input Frame C Drives

Frame	Drive Current Rating Code	DC Amps	AC Line Amps	Qty	Bussmann	Mersen	SIBA
					Square Body - Flush End Contact		
C	521	521	426	6	170M5464 + switch 170H0069	6,9 URD 32 TTF 800 + switch MS 3-V1-5 BS	20 671 32.800 + switch 28 001 04
	700	700	571				

Leg Fuses - 230V AC Input Frame D Drives

Frame	Drive Current Rating Code	DC Amps	AC Line Amps	Qty	Bussmann	Mersen	SIBA
					Square Body - DIN 43653 Stud-Mount		
D	875	875	715	6	170M6263 + switch 170H0069	Y300263 + switch MS 3V 1-5 UR	20 635 32.900 + switch 28 001 04
	1K0	1050	858		170M6264 + switch 170H0069	Z300264 + switch MS 3V 1-5 UR	20 635 32.1000 + switch 28 001 04

Leg Fuses - 460V AC Input Frame C Drives

Frame	Drive Current Rating Code	DC Amps	AC Line Amps	Qty	Bussmann	Mersen	SIBA
					Square Body - Flush End Contact		
C	495	495	404.4	6	170M5462 + switch 170H0069	6,9 URD 32 TTF 630 + switch MS 3-V1-5 BS	20 671 32.630 + switch 28 001 04
	667	667	544.9		170M5464 + switch 170H0069	6,9 URD 32 TTF 800 + switch MS 3-V1-5 BS	20 671 32.800 + switch 28 001 04

Leg Fuses - 460V AC Input Frame D Drives

Frame	Drive Current Rating Code	DC Amps	AC Line Amps	Qty	Bussmann	Mersen	SIBA
					Square Body - DIN 43653 Stud-Mount		
D	830	830	678.1	6	170M6262 + switch 170H0069	X300262 + switch MS 3V 1-5 UR	20 635 32.800 + switch 28 001 04
	996	996	813.7		170M6264 + switch 170H0069	Z300264 + switch MS 3V 1-5 UR	20 635 32.1000 + switch 28 001 04
	1K1	1162	949.4		170M6265 + switch 170H0069	A300262 + switch MS 3V 1-5 UR	20 635 32.1100 + switch 28 001 04
	1K3	1328	1085.0		170M6266 + switch 170H0069	B300266 + switch MS 3V 1-5 UR	20 635 32.1250 + switch 28 001 04
	1K4	1494	1220.6		170M6267 + switch 170H0069	C300267 + switch MS 3V 1-5 UR	20 635 32.1400 + switch 28 001 04

Leg Fuses - 575V AC Input Frame C Drives

Frame	Drive Current Rating Code	DC Amps	AC Line Amps	Qty	Bussmann	Mersen	SIBA
					Square Body - Flush End Contact		
C	540	540	441	6	–	11 URD 72 TTF 0800 + switch MS 3V 1-5 BS	20 771 32.800 + switch 28 001 04
	675	675	551				

Leg Fuses - 575V AC Input Frame D Drives

Frame	Drive Current Rating Code	DC Amps	AC Line Amps	Qty	Bussmann	Mersen	SIBA
					Square Body - DIN 43653 Stud-Mount		
D	810	810	661	6	170M6246 + switch 170H0069	J300572 + switch MS 3V 1-5 UR	20 735 32.800 + switch 28 001 04
	1K0	1080	881		170M6248 + switch 170H0069	L300574 + switch MS 3V 1-5 UR	20 735 32.1000 + switch 28 001 04
	1K2	1215	991	12	170M6244 + switch 170H0069	G300570 + switch MS 3V 1-5 UR	20 735 32.630 + switch 28 001 04
	1K3	1350	1102		170M6245 + switch 170H0069	H300571 + switch MS 3V 1-5 UR	20 735 32.700 + switch 28 001 04
	1K6	1688	1377		170M6246 + switch 170H0069	J300572 + switch MS 3V 1-5 UR	20 735 32.800 + switch 28 001 04

Leg Fuses - 690V AC Input Frame C Drives

Frame	Drive Current Rating Code	DC Amps	AC Line Amps	Qty	Bussmann	Mersen	SIBA
					Square Body - Flush End Contact		
C	452	452	369	6	170M5394 + switch 170H0069	12,5 URD 72 TTF 0500 + switch MS 3V 1-5 BS	20 771 32.500 + switch 28 001 04
	565	565	461		–	12,5 URD 72 TTF 0630 + switch MS 3V 1-5 BS	20 771 32.630 + switch 28 001 04

Leg Fuses - 690V AC Input Frame D Drives

Frame	Drive Current Rating Code	DC Amps	AC Line Amps	Qty	Bussmann	Mersen	SIBA
					Square Body - DIN 43653 Stud-Mount		
D	678	678	553	6	170M6244 + switch 170H0069	G300570 + switch MS 3V 1-5 UR	20 735 32.630 + switch 28 001 04
	791	791	645		170M6246 + switch 170H0069	J300572 + switch MS 3V 1-5 UR	20 735 32.800 + switch 28 001 04
	904	904	738		170M6247 + switch 170H0069	K300573 + switch MS 3V 1-5 UR	20 735 32.900 + switch 28 001 04
	1K0	1017	830		170M6248 + switch 170H0069	L300574 + switch MS 3V 1-5 UR	20 735 32.1000 + switch 28 001 04
	1K1	1130	922	12	170M6244 + switch 170H0069	G300570 + switch MS 3V 1-5 UR	20 735 32.630 + switch 28 001 04
	1K2	1243	1014		170M6244 + switch 170H0069	G300570 + switch MS 3V 1-5 UR	20 735 32.630 + switch 28 001 04
	1K4	1413	1153		170M6245 + switch 170H0069	H300571 + switch MS 3V 1-5 UR	20 735 32.700 + switch 28 001 04
	1K5	1582	1291		170M6246 + switch 170H0069	J300572 + switch MS 3V 1-5 UR	20 735 32.800 + switch 28 001 04

Frame C Regenerative Drive - Leg Fuse Location

Note: Drive shown with front covers removed and Control EMI shield lowered.

Leg fuses and switches are on the busbars behind the Control EMI shield, which holds the Control board.

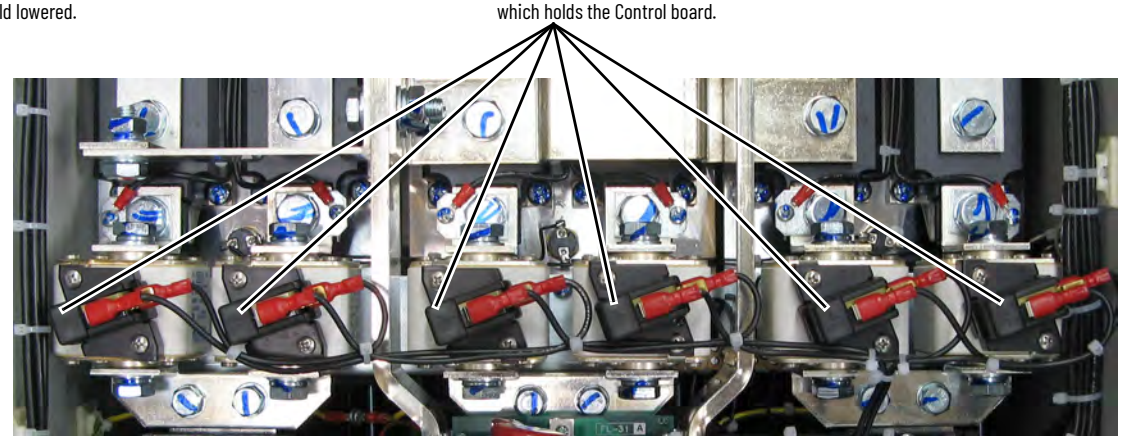

Frame D Regenerative Drive - Leg Fuse Location

Note: Drive shown with Control EMI shield in open position.

Leg fuses and switches are on the busbars behind the Control EMI shield, which holds the Control board.

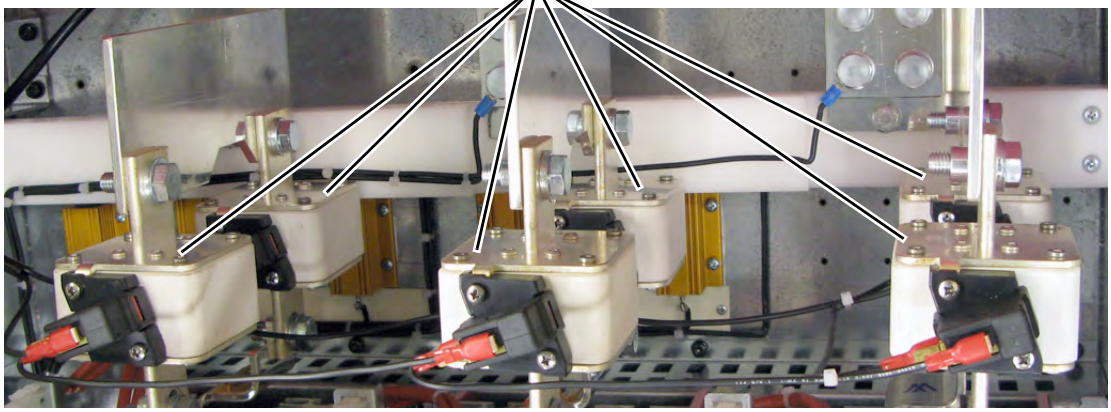

Fuses for Non-Regenerative Frame C and D Drives

AC input line and/or leg fuses are internally mounted and provided with frames C and D drives. See Fuse Code FS4 in PowerFlex DC Drive Frame C and D Fuse Information on page 53. Also, see Frame C Non-Regenerative Drive - AC Input Line Fuse Location on page 58.

AC Input Line Fuses - 230V AC Input Frame C

Frame	Drive Current Rating Code	DC Amps	AC Line Amps	Qty	Bussmann	Mersen	SIBA
					Square Body - Flush End Contact		
C	521	521	426	3	170M5466 + switch 170H0069	6,9 URD 32 TTF 1000 + switch MS 3-V1-5 BS	20 671 32.1000 + switch 28 001 04
	700	700	571				

Leg Fuses - 230V AC Input Frame D Drives

Frame	Drive Current Rating Code	DC Amps	AC Line Amps	Qty	Bussmann	Mersen	SIBA
					Square Body - DIN 43653 Stud-Mount		
D	875	875	715	6	170M6263 + switch 170H0069	Y300263 + switch MS 3V 1-5 UR	20 635 32.900 + switch 28 001 04
	1K0	1050	858		170M6264 + switch 170H0069	Z300264 + switch MS 3V 1-5 UR	20 635 32.1000 + switch 28 001 04

AC Input Line Fuses - 460V AC Input Frame C

Frame	Drive Current Rating Code	DC Amps	AC Line Amps	Qty	Bussmann	Mersen	SIBA
					Square Body - Flush End Contact		
C	495	495	404.4	3	170M5464 + switch 170H0069	6,9 URD 32 TTF 800 + switch MS 3-V1-5 BS	20 671 32.800 + switch 28 001 04
	667	667	544.9		170M5466 + switch 170H0069	6,9 URD 32 TTF 1000 + switch MS 3-V1-5 BS	20 671 32.1000 + switch 28 001 04

Leg Fuses - 460V AC Input Frame D Drives

Frame	Drive Current Rating Code	DC Amps	AC Line Amps	Qty	Bussmann	Mersen	SIBA
					Square Body - DIN 43653 Stud-Mount		
D	830	830	678.1	6	170M6262 + switch 170H0069	X300262 + switch MS 3V 1-5 UR	20 635 32.800 + switch 28 001 04
	996	996	813.7		170M6264 + switch 170H0069	Z300264 + switch MS 3V 1-5 UR	20 635 32.1000 + switch 28 001 04
	1K1	1162	949.4		170M6265 + switch 170H0069	A300262 + switch MS 3V 1-5 UR	20 635 32.1100 + switch 28 001 04
	1K3	1328	1085.0		170M6266 + switch 170H0069	B300266 + switch MS 3V 1-5 UR	20 635 32.1250 + switch 28 001 04
	1K4	1494	1220.6		170M6267 + switch 170H0069	C300267 + switch MS 3V 1-5 UR	20 635 32.1400 + switch 28 001 04

AC Input Line Fuses - 575V AC Input Frame C Drives

Frame	Drive Current Rating Code	DC Amps	AC Line Amps	Qty	Bussmann	Mersen	SIBA
					Square Body - Flush End Contact		
C	540	540	441	3	170M5466 + switch 170H0069	6,9 URD 32 TTF 1000 + switch MS 3V 1-5 BS	20 671 32.1000 + switch 28 001 04
	675	675	551				

Leg Fuses - 575V AC Input Frame D Drives

Frame	Drive Current Rating Code	DC Amps	AC Line Amps	Qty	Bussmann	Mersen	SIBA
					Square Body - DIN 43653 Stud-Mount		
D	810	810	661	6	170M6262 + switch 170H0069	X300262 + switch MS 3V 1-5 UR	20 635 32.800 + switch 28 001 04
	1K0	1080	881		170M6264 + switch 170H0069	Z300264 + switch MS 3V 1-5 UR	20 635 32.1000 + switch 28 001 04
	1K2	1215	991		170M6265 + switch 170H0069	A300262 + switch MS 3V 1-5 UR	20 635 32.1100 + switch 28 001 04
	1K3	1350	1102		170M6266 + switch 170H0069	B300266 + switch MS 3V 1-5 UR	20 635 32.1250 + switch 28 001 04
	1K6	1688	1377	12	170M6262 + switch 170H0069	X300262 + switch MS 3V 1-5 UR	20 635 32.800 + switch 28 001 04

AC Input Line Fuses - 690V AC Input Frame C Drives

Frame	Drive Current Rating Code	DC Amps	AC Line Amps	Qty	Bussmann	Mersen	SIBA
					Square Body - Flush End Contact		
C	452	452	369	6	170M5463 + switch 170H0069	6,9 URD 32 TTF 0700 + switch MS 3V 1-5 BS	20 671 32.700 + switch 28 001 04
	565	565	461		170M5465 + switch 170H0069	6,9 URD 32 TTF 0900 + switch MS 3V 1-5 BS	20 671 32.900 + switch 28 001 04

Leg Fuses - 690V AC Input Frame D Drives

Frame	Drive Current Rating Code	DC Amps	AC Line Amps	Qty	Bussmann	Mersen	SIBA
					Square Body - DIN 43653 Stud-Mount		
D	678	678	553	6	170M6260 + switch 170H0069	V300260 + switch MS 3V 1-5 UR	20 635 32.630 + switch 28 001 04
	791	791	645		170M6262 + switch 170H0069	X300262 + switch MS 3V 1-5 UR	20 635 32.800 + switch 28 001 04
	904	904	738		170M6263 + switch 170H0069	Y300263 + switch MS 3V 1-5 UR	20 635 32.900 + switch 28 001 04
	1K0	1017	830		170M6264 + switch 170H0069	Z300264 + switch MS 3V 1-5 UR	20 635 32.1000 + switch 28 001 04
	1K1	1130	922		170M6265 + switch 170H0069	A300262 + switch MS 3V 1-5 UR	20 635 32.1100 + switch 28 001 04
	1K2	1243	1014		170M6266 + switch 170H0069	B300266 + switch MS 3V 1-5 UR	20 635 32.1250 + switch 28 001 04
	1K4	1413	1153		170M6267 + switch 170H0069	C300267 + switch MS 3V 1-5 UR	20 635 32.1400 + switch 28 001 04
	1K5	1582	1291	12	170M6262 + switch 170H0069	X300262 + switch MS 3V 1-5 UR	20 635 32.800 + switch 28 001 04

Frame C Non-Regenerative Drive - AC Input Line Fuse Location

AC Input fuses and switches are on the bus bars behind the Control EMI shield, which holds the Control board.

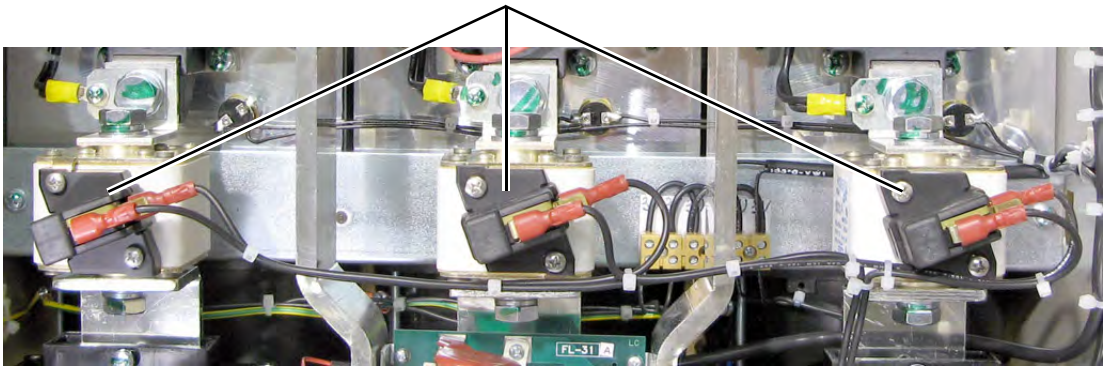

Note: Drive shown with front covers removed and Control EMI shield lowered.

PowerFlex DC Field Controller Input Fuses

Fast-acting AC input fuses are required on all field controllers to help protect the field converter. All AC input fuses must be sourced separately and are mounted externally from the field converter. The required fuses are listed in the following table.

Cat. No.	Frame Size	DC Amps	AC Line Amps	Bussman		Mersen	
				Ferrule FWP Type	North American FWP Type	Ferrule A70QS Type	North American A70P / A70QS Type
23PFCx017	A	17	14	FWP-25A14F	FWP-25B	A70QS25-14F	A70P25-4
23PFCx060		60	49	FWP-80A22F	FWP-80B	A70QS80-22F	A70QS80-4
23PFCx120		120	98	–	FWP-150A	–	A70QS150-4K
23PFCx245	B	245	201		FWP-300A		A70QS300-4
23PFCx365		365	299		FWP-400A		A70QS400-4
23PFCx570		570	467		FWP-600A		A70QS600-4

PowerFlex DC Drive and Field Controller Control Power Circuit Protection Fuses

The following fuses are used to protect the switching power supply circuit.

IMPORTANT Before you order and install fuses, verify the circuit board revision.

Frame	Circuit Board ID / Revision	Designation	Fuse (5 x 20 mm)
A	SW1-31 / H and below	F1	1 A, 250V, slow
	SW1-31 / I and above		2.5 A, 250V, slow
B	SW2-32 / H and below		3.15 A, 250V fast
		F2	2.5 A, 250V slow
	SW2-32 / I and above	F1	
		F2	
C(1)	SW3-32 / H and below	F1	3.15 A, 250V fast
		F2	2.5 A, 250V slow
	SW3-32 / I and above	F1	
		F2	
D(1)	SW1-31 / I and above	F1	

(1) These fuses apply only to PowerFlex DC drives.

Frame A Switching Power Supply Fuse Location (on all PowerFlex DC Drives and Field Controllers)

Top View of Drive

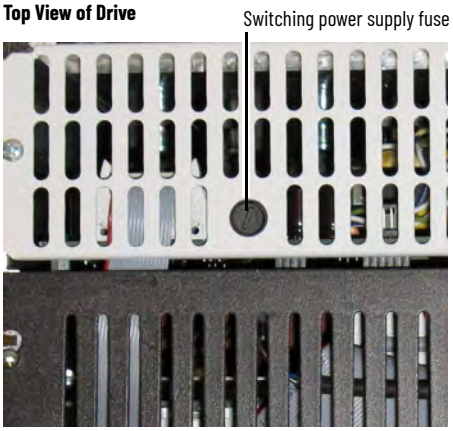

Frame B Switching Power Supply Fuse Location (on all PowerFlex DC Drives and Field Controllers)

Top View of Drive

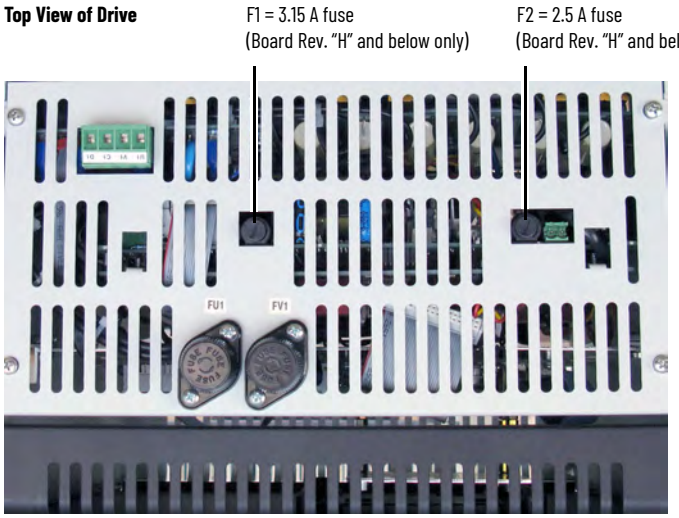

Frame C Switching Power Supply Fuse Location (only on PowerFlex DC Drives)

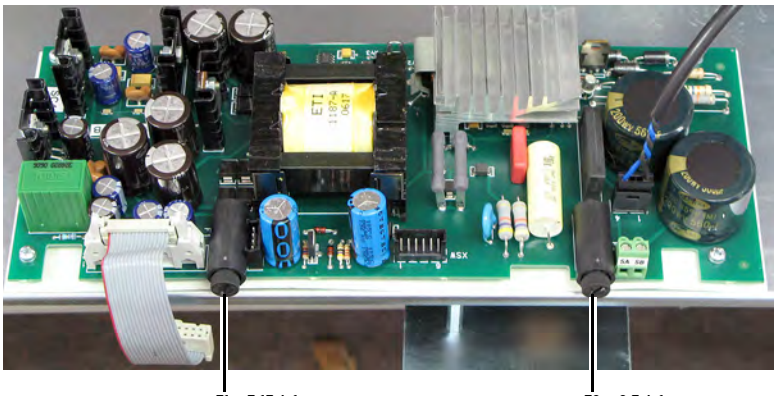

F1 = 3.15 A fuse
(Board Rev. "H" and below only)

F2 = 2.5 A fuse
(Board Rev. "H" and below only)

Fuses are on the switching power supply circuit board (SW-2)
on the back of the control EMI shield, which holds the control board.

Frame D Switching Power Supply Circuit Board Fuse Location (only on PowerFlex DC Drives)

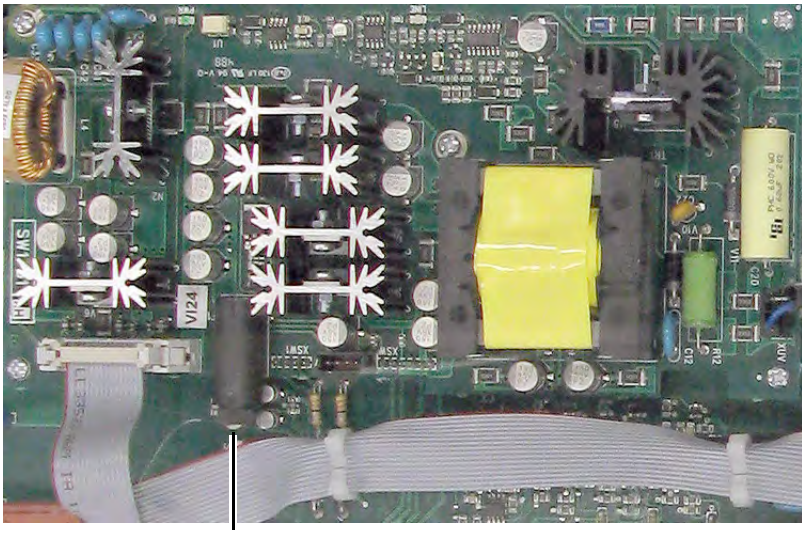

Switching power supply fuse holder

The switching power supply circuit board is on the Control EMI shield.

Mounting

Maximum Surrounding Air Temperature Specifications

- 0...50 °C (32...122 °F), typical
- De-rate 1.25% for every 1 °C (34 °F) over 50 °C (122 °F), to 55 °C (131 °F)
- Additional cooling is required for temperatures above 55 °C (131 °F)

Operating Conditions

The drive and/or field controller must be mounted in a clean, dry location. Contaminants such as oils, corrosive vapors, and abrasive debris must be kept out of the enclosure. NEMA/UL Type Open, IP20 enclosures are intended for indoor use primarily to provide a degree of protection against contact with enclosed equipment. These enclosures offer no protection against airborne contaminants.

Minimum Mounting Clearances

Minimum clearance requirements (shown here) are intended to be from device to device. Other objects can occupy this space; however, reduced airflow can cause protection circuits to fault the drive. The device must be mounted in a vertical orientation (as shown in the illustration) and must not be mounted at an angle greater than 30° from vertical. In addition, inlet air temperature must not exceed the product specification.

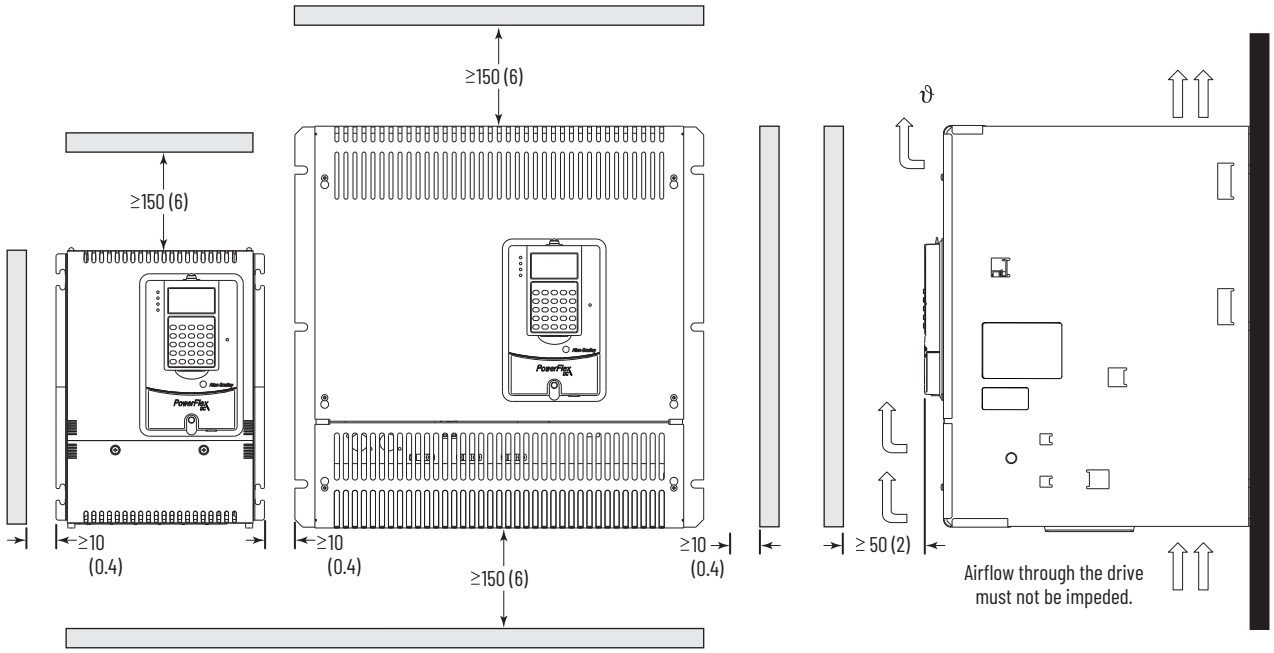

IMPORTANT Verify that all mounting screws are properly tightened before and after operation.

Approximate Dimensions – PowerFlex DC Drives

Frame A Dimensions

mm (in.)					
A	B	C	A1	A2	B1
267 (10.5)	359 (14.0)	287 (11.3)	7 (0.3)	250 (9.8)	275 (10.8)

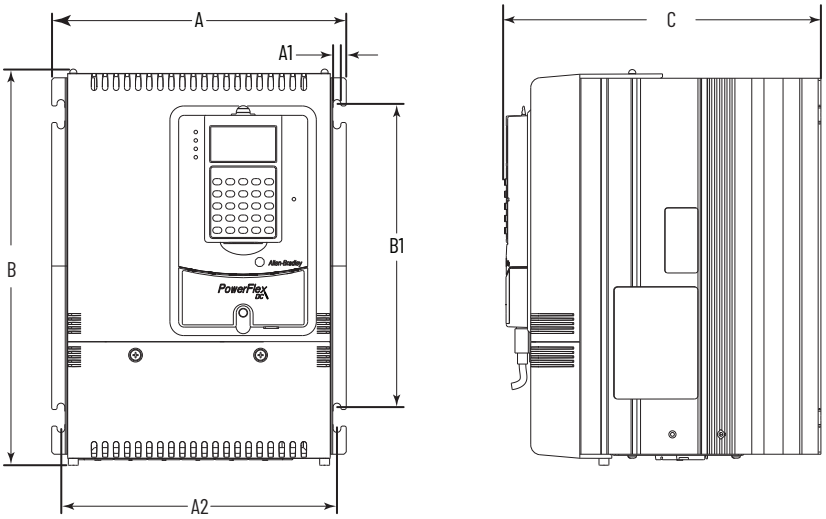

Frame A Weights

Drive w/ND Rating Code		Weight, kg (lb)	
230V	460V	Drive	Drive and Packaging
7P0	4P1	11 (24.25)	13 (28.7)
9P0	6P0		
012	010		
020	014		
–	019		
029	027		
038	035	11.5 (25.4)	13.5 (29.8)
055	045		
-	052		
073	073	12 (26.5)	14 (30.9)
093	086		
110	–		
–	100		
	129		

Approximate Dimensions – PowerFlex DC Drives (continued)

Frame B Dimensions

mm (in.)							
A	A1	A2	A3	B	B1	C1	C2[1]
311 (12.2)	275 (10.8)	16.5 (0.65)	7 (0.3)	388 (15.3)	375 (14.8)	350 (13.8)	380 (15.0)

(1) Only frame B drive catalog numbers 20P21AD330, 20P21AD412, 20P21AE405, 20P41AB360, 20P41AB434, 20P41AD330, 20P41AD412, and 20P41AE405.

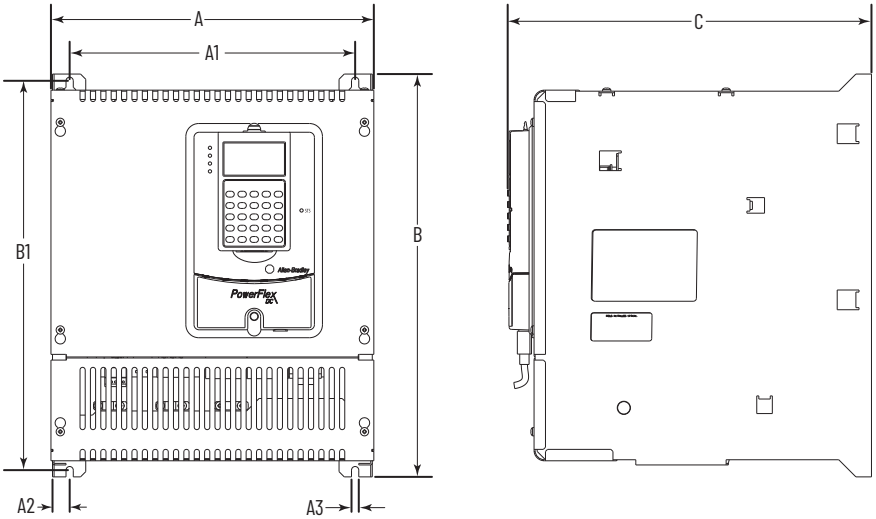

Terminal Details Dimensions in mm (in.)

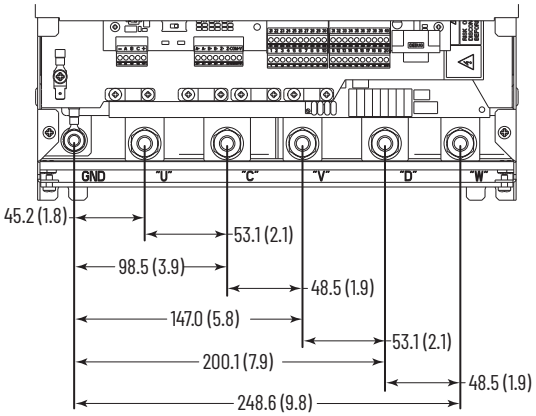

Frame B Weights

Drive w/ND Rating Code			Weight, kg (lb)	
230V	460V	575V	Drive	Drive and Packaging
146	167	067	25.5 (56.2)	27.5 (60.6)
180	207	101		
218	—	135		
265	250	270	29.5 (65.0)	31.5 (69.5)
360	330	405	32 (70.5)	34 (75)
434	412	—		

Approximate Dimensions – PowerFlex DC Drives (continued)

Frame C Dimensions

mm (in.)								
A	A1	B	B1	B2	B3	B4	B5	C
521 (20.5)	499 (19.7)	511 (20.1)	400 (15.7)	200 (7.9)	55 (2.2)	56 (2.2)	10.5 (0.4)	416 (16.4)

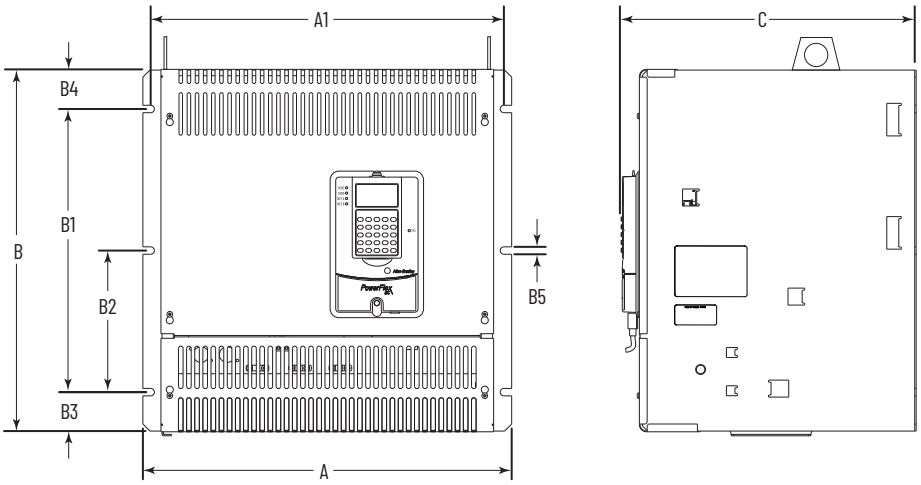

Terminal dimensions are shown in mm and (in.)

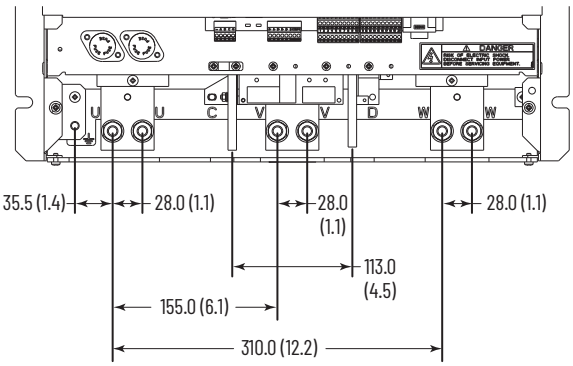

Frame C Weights

Drive w/ND Rating Code				Weight, kg (lb)			
				Regenerative Drives		Non-regenerative Drives	
230V	460V	575V	690V	Drive	Drive and Packaging	Drive	Drive and Packaging
–	495	–		61 (134.5)	83 (183.0)	57 (125.7)	79 (174.2)
521	667			65 (143.3)	87 (191.8)	62 (136.7)	84 (185.2)
700	–						
–		540	452	72 (158.7)	94 (207.2)	68 (150.0)	90 (198.4)
		675	565				

Approximate Dimensions – PowerFlex DC Drives (continued)

Frame D Dimensions - Right Side and Front Views

Dimensions are shown in mm and (in.)
Dimensions of terminals U, V, and W are the same.

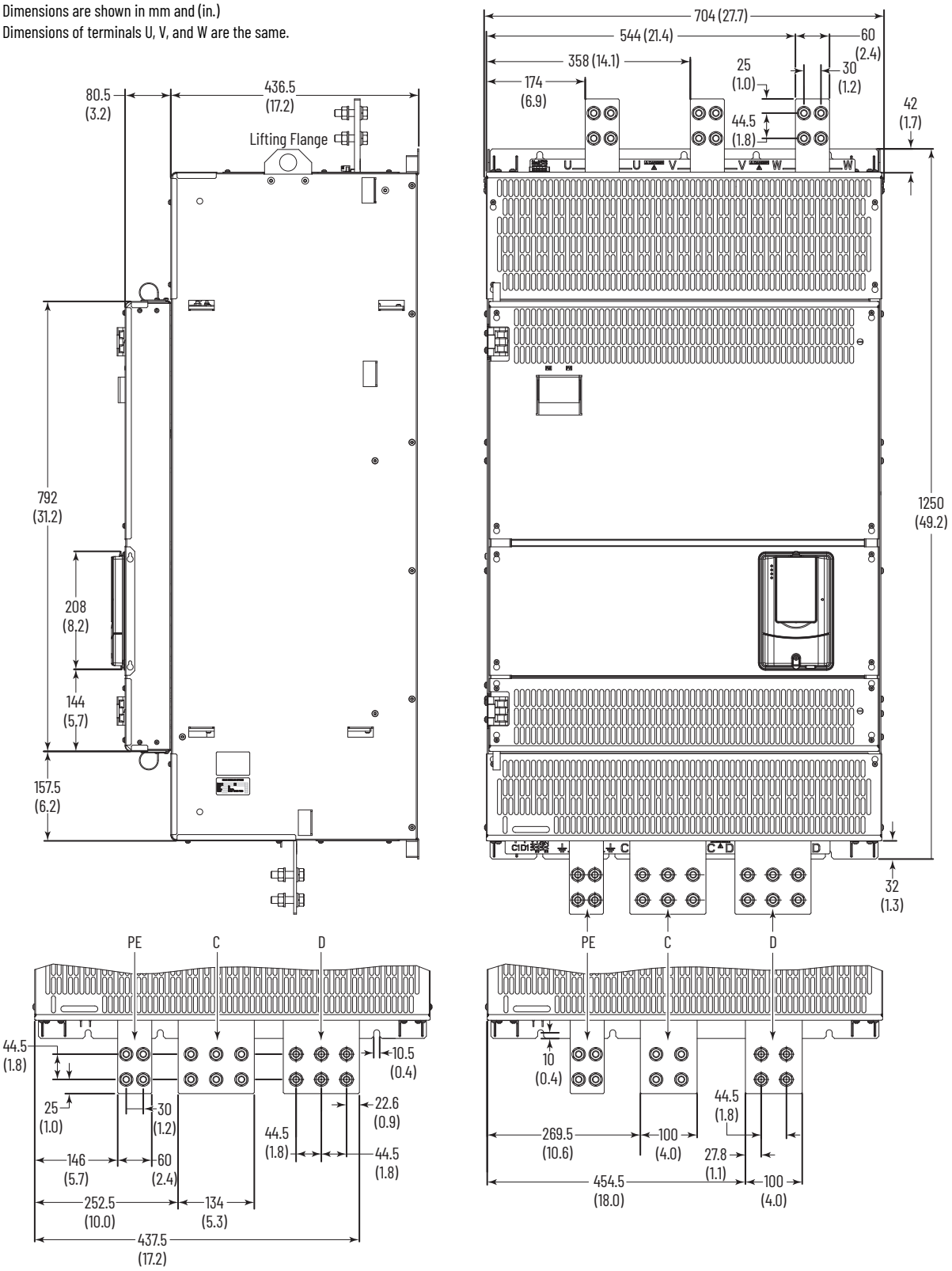

134 mm (5.3 in.) C and D terminals are installed on 460V AC input, 800 Hp and 900 Hp, 575V AC input, 1000 Hp, and 690V AC input, 1100, 1200, 1250, and 1,400 Hp drives only. All other frame D ratings have 100 mm (4.0 in.) C and D terminals.

Approximate Dimensions – PowerFlex DC Drives (continued)

Frame D Dimensions - Left Side and Back Views

Dimensions are shown in mm and (in.)

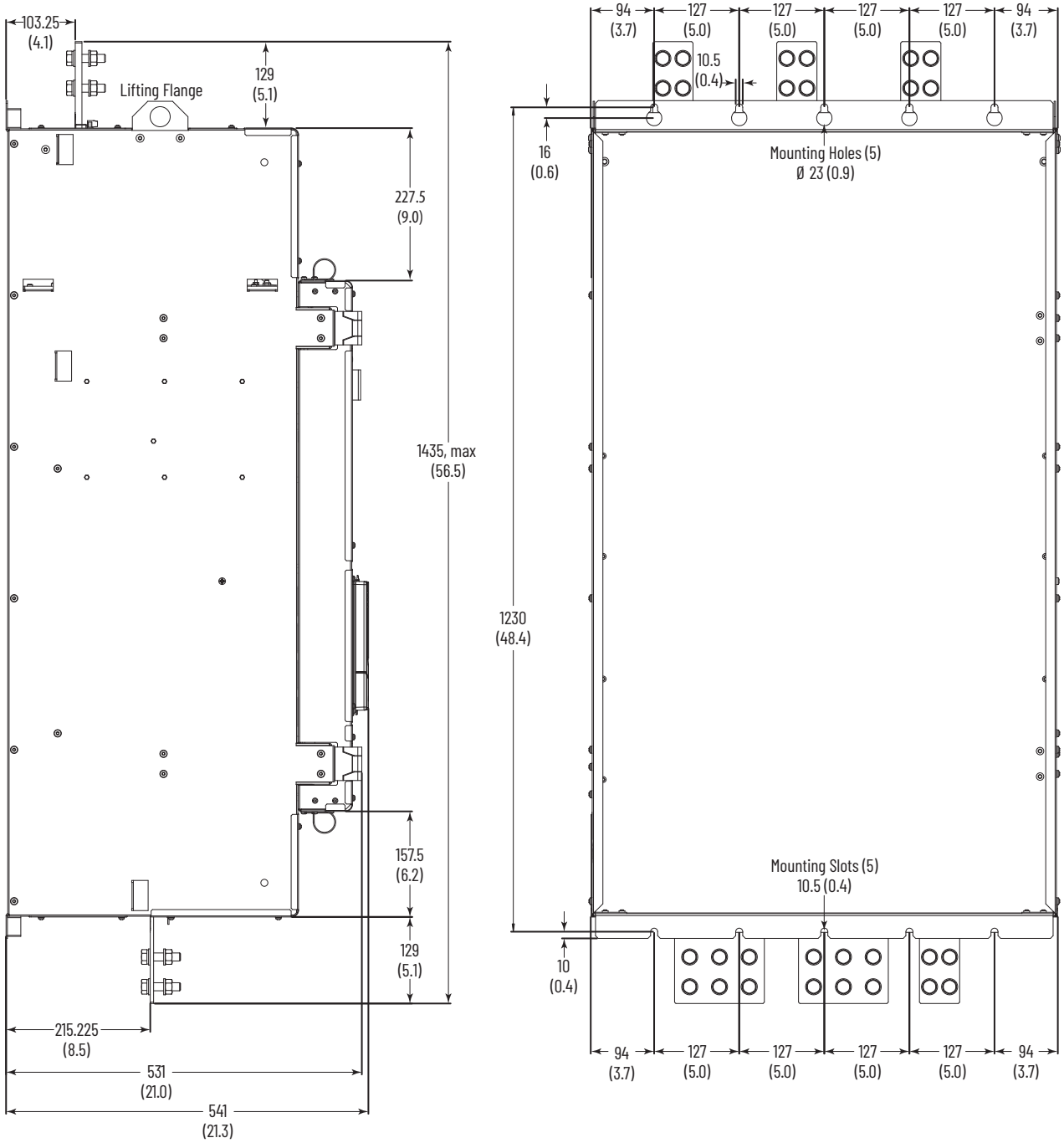

Frame D - 230V AC Input Drive Weights

Drive w/ND Rating Code	Weight, kg (lb)			
	Regenerative Drives		Non-regenerative Drives	
	Drive	Drive and Packaging	Drive	Drive and Packaging
875	203 (447.5)	281 (619.5)	152 (335.1)	230 (507.1)
1K0				

Frame D - 460V AC Input Drive Weights

Drive w/ND Rating Code	Weight, kg (lb)			
	Regenerative Drives		Non-regenerative Drives	
	Drive	Drive and Packaging	Drive	Drive and Packaging
830	202 (445.3)	280 (617.3)	152 (335.1)	230 (507.1)
996				
1K1	215 (474.0)	293 (646.0)	165 (363.8)	243 (535.7)
1K3				
1K4				

Frame D - 575V AC Input Drive Weights

Drive w/ND Rating Code	Weight, kg (lb)			
	Regenerative Drives		Non-regenerative Drives	
	Drive	Drive and Packaging	Drive	Drive and Packaging
810	198 (436.5)	276 (608.5)	148 (326.3)	226 (498.2)
1K0				
1K2	215 (474.0)	293 (646.0)	165 (363.8)	243 (535.7)
1K3	222 (489.4)	300 (661.4)	172 (379.2)	250 (551.2)
1K6	241 (531.3)	319 (703.3)	191 (421.1)	269 (593.0)

Frame D - 690V AC Input Drive Weights

Drive w/ND Rating Code	Weight, kg (lb)			
	Regenerative Drives		Non-regenerative Drives	
	Drive	Drive and Packaging	Drive	Drive and Packaging
678	198 (436.5)	276 (608.5)	148 (326.3)	226 (498.2)
791				
904	200 (440.9)	278 (612.9)	150 (330.7)	228 (502.7)
1K0	202 (445.3)	280 (617.3)	152 (335.1)	230 (507.1)
1K1	215 (474.0)	293 (646.0)		
1K2			165 (363.8)	243 (535.7)
1K4	241 (531.3)	319 (703.3)	172 (379.2)	250 (551.2)
1K5			191 (421.1)	269 (593.0)

Approximate Dimensions and Weights – PowerFlex DC Field Controllers

Frame A Dimensions

mm (in.)					
A	B	C	A1	A2	B1
267 (10.5)	359 (14.0)	287 (11.3)	7 (0.3)	250 (9.8)	275 (10.8)

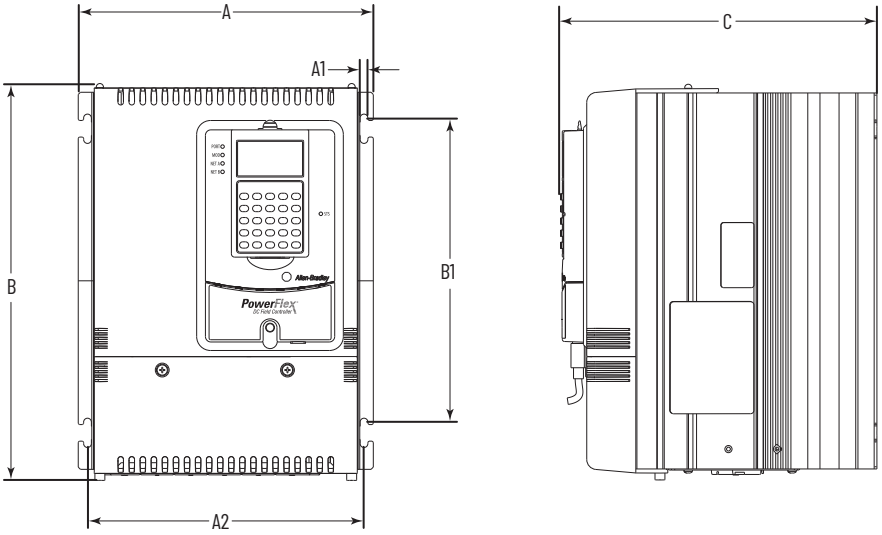

Frame A Weights

Cat. No.	Weight, kg (lb)	
	Drive	Drive and Packaging
23PFCB017 and23PFCD017	10.8 (23.8)	12.8 (28.2)
23PFCB060 and 23PFCD060	11.3 (24.9)	13.3 (29.3)
23PFCB120 and 23PFCD120	11.8 (26.0)	13.8 (30.4)

Approximate Dimensions and Weights – PowerFlex DC Field Controllers (continued)

Frame B Dimensions

mm (in.)							
A	A1	A2	A3	B	B1	C1	C2[1]
311 (12.2)	275 (10.8)	16.5 (0.65)	7 (0.3)	388 (15.3)	375 (14.8)	350 (13.8)	380 (15.0)

(1) Only frame B drive catalog numbers 23PFCB570 and 23PFCD570.

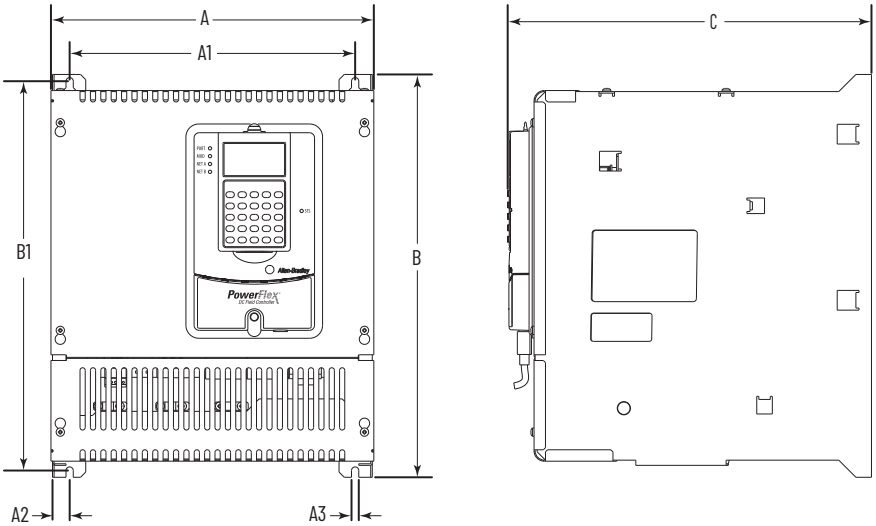

Terminal dimensions are shown in mm and (in.)

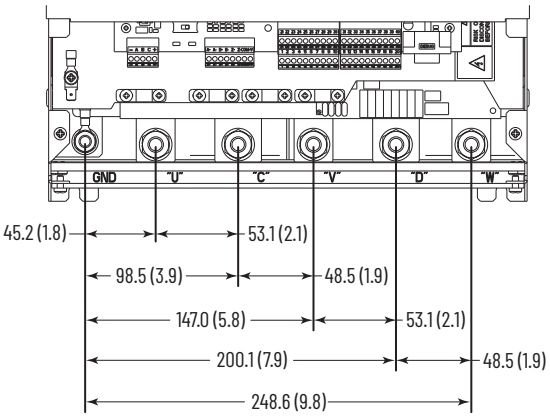

Frame B Weights

Cat. No.	Weight, [kg (lb)]	
	Drive	Drive and Packaging
23PFCB245 and 23PFCD245	25.3 (55.8)	27.3 (60.2)
23PFCB365 and 23PFCD365	29.3 (64.6)	31.3 (69.0)
23PFCB570 and 23PFCD570	31.8 (70.1)	33.8 (74.5)

PowerFlex DC Drive Specifications

Category	Specification	
Agency Certification	c-UL-us	Listed to UL508C and CAN/CSA C22.2 No. 14-05.
	CE	In conformity with the following European Directives: • EMC Directive (2014/35/EU) • Low Voltage Directive (2006/95/EC) Standards applied: • EN 61800-5-1 • EN 61800-3
	RCM	Certified by Rockwell Automation to be in conformity with the requirements of the applicable Australian legislation and the standards referenced: IEC 61800-3.
	Korean KC Registration	MSIP-REM-RAA-20P See the certificate of registration for specific drive catalog numbers that have this certification.(1)
	The drive is also designed to meet the following specifications: NFPA 70 - US National Electrical Code	

(1) See the product certifications website, http://www.rockwellautomation.com/products/certification/ for declarations of conformity, certificates, and other certification details.

Category	Specification	
Drive Type	Full Wave Regen, 6 Pulse, Regulated Field Supply	
Protection	Heat sink Thermistor:	Monitored by microprocessor overtemp trip
	Drive Overcurrent Trip • Software Overcurrent Trip: • Hardware Overcurrent Trip:	• Programmable, 0...250% of rated current (175% default) • Based on armature circuit fusing
	Line transients:	Up to 2000 volts peak per IEC 6100-4-5
	Control Logic Noise Immunity:	Showering arc transients up to 1500V peak
	Power Ride-Thru:	15 milliseconds at full load
	Logic Control Ride-Thru:	0.5 seconds minimum, 2 seconds typical
Environment(1)	Altitude:	1000 m (3300 ft) max. without derating. De-rate output power by 1.2% for every 100 meters (328 ft) above 1000 meters (3300 ft).
	Maximum Surrounding Air Temperature IP20, NEMA Type Open:	0...50 °C (32...122 °F), typical. De-rate 1.25% for every 1 °C over 50 °C (122 °F), to 55 °C (131 °F). More cooling is required for temps. above 55 °C.
	Storage Temp. (all const.):	-25...+55 °C (-13...+131 °F)
	Atmosphere:	**Important:** Drive **must not** be installed in an area where the ambient atmosphere contains volatile or corrosive gas, vapors, or dust. If the drive is not going to be immediately installed, it must be stored in an area where it is not exposed to a corrosive atmosphere.
	Relative Humidity:	Operating: 5...85% noncondensing Storage: 5...95% noncondensing
	Shock:	15G peak for 11 ms duration (±1.0 ms)
	Vibration:	0.152 mm (0.006 in.) displacement, 1G peak

(1) PowerFlex DC drives must be installed in a Pollution Degree 2 environment.

PowerFlex DC Drive Specifications (continued)

Category	Specification		
Drive Type	Full Wave Regen, 6 Pulse, Regulated Field Supply		
Electrical	Input Voltages:	Armature: 230V to 690V AC +/- 10%, 3 Phase Field: 230V to 460V AC +/- 10%, 1 Phase Control: 115V AC or 230V AC +/- 15%, 1 Phase (115V AC input control power requires a jumper between terminals SA and SB for frame B and C drives only.) (See AC Input Voltages on page 24 for details.)	
	Input Frequency:	50/60 Hz +/- 5%	
	Max. Rate of Change of Input Frequency:	2 Hz/Sec.	
	Armature Output Voltage:	Two Quadrant Drives	Four Quadrant Drives
		260V DC @ 230V AC 470V DC @ 400V AC 530V DC @ 440V AC 560V DC @ 460V AC 580V DC @ 480V AC 680V DC @ 575V AC 810V DC @ 690V AC	240V DC @ 230V AC 420V DC @ 400V AC 460V DC @ 440V AC 480V DC @ 460V AC 500V DC @ 480V AC 600V DC @ 575V AC 720V DC @ 690V AC
	Output Horsepower (Cont.)	1.5...300 Hp @ 230V AC 2...900 Hp @ 460V AC 50...1250 Hp @ 575V AC 400...1400 Hp @ 690V AC	
	Output Current:	7...1050 A @ 230V AC 4.1...1494 A @ 400V AC 67.5...1688 A @ 575V AC 452...1582 A @ 690V AC	
	Drive Overload Capability:	100% rated continuous current 150% rated current for 1 minute then fault 200% rated current for 3 seconds then fault	
	Motor Overload Protection:	Standard Duty: • 150% motor rated current for 60 seconds • 200% motor rated current for 3 seconds, configurable as a fault or alarm Heavy Duty: • 200% motor rated current for 60 seconds, configurable as a fault or alarm Note: PowerFlex DC drives, v6.*xxx* and later, provide configurable speed-sensitive overload protection, thermal memory retention, and motor over-temperature sensing.	
	Field Output Voltage	200V DC @ 230V AC 310V DC @ 400V AC 360V DC @ 460V AC Maximum field output voltage is 0.85 x AC input line voltage.	
	Controller Current Overload:	150% rated current for 1 minute 200% rated current for 3 seconds	
	Max. Short Circuit Rating:	100,000 A	

PowerFlex DC Drive Specifications (continued)

Category	Specification	
Control	Speed Regulation:(1)	All operating modes: Max. speed: 8,000 rpm Digital reference resolution: 0.1 rpm Analog reference resolution: ≥0.25 rpm
		with Digital Incremental Encoder/Resolver Speed feedback resolution better than 0.5 rpm (based on encoder PPR or resolver resolution) Operating range better than 1000:1 rpm, bidirectional Performance Accuracy ±0.02% typical 170 rad/sec bandwidth
		with DC Analog Tachometer Speed feedback resolution better than 2000:1 rpm Operating range better than 1000:1 rpm, bidirectional Performance accuracy ±0.1% 170 rad/sec bandwidth
		with Armature Voltage Feedback Voltage feedback resolution better than 2000:1 rpm Operating range better than 100:1 rpm, bidirectional Performance accuracy: ±2.0% typical 80 rad/sec bandwidth
	Torque Regulation	Current feedback resolution better than 2000:1
		Performance accuracy: 1.0% typical
		500 rad/sec bandwidth
Feedback Devices	Encoder	Type: Incremental, dual channel, two channel optional (with jumper), differential (recommended) or single-ended
		Input Voltage: Configurable for 2.5...5.2V (switch S21 in ENC_5 position) or 5.4...15.2V (switch S21 in ENC_12 position)
		Input Current: 4.5 mA / 6.8...10.9 mA each channel
		Quadrature: 90° ± 27° @ 25 °C
		Duty cycle: 50% ± 10% Source/Sink capable
		Pulses Per Revolution: 100...32770
		Maximum Frequency: 150 kHz
		Maximum Cable Length: Shielded, 150 m (0.75 mm^2), 125 m (0.5 mm^2), 55 m (0.22 mm^2)
	Resolver	The PowerFlex DC Drive is not CE certified when the resolver feedback option module is installed in the drive. See the PowerFlex DC Drive Resolver Feedback Option Module Installation Instructions, publication 20P-IN071 for details.
	DC Analog Tachometer	Input Voltage: 22.7, 45.4, 90.7, 181.6, & 302.9V max.
		Input Current: 8 mA full scale
		Maximum Cable Length: Shielded, depends on the installation, typical 150 m.
Inputs	Analog Inputs	Three configurable, isolated, differential
		±10V, 0...10V, 0...20 mA or 4...20 mA.
		Resolution: 11 Bit + sign
	Digital Inputs	Eight standard configurable, four additional configurable with the I/O Expansion circuit board.
		Max Voltage +30V DC input, 200 mA (total current draw is the sum of encoder power, digital outputs, and any other loads that are connected to terminal 19)
Outputs	Analog Outputs	Two standard configurable, two additional configurable with the I/O Expansion circuit board. Sample rate 2 ms.
		±10V, 5 mA, bipolar (current is not bipolar)
		Resolution: 11 Bit + sign
	Digital Outputs	Four standard configurable, four additional configurable with the I/O Expansion circuit board.
		30V, 50 mA
	Relay Outputs	Two configurable, N.O. contacts
		Max. 250V AC, 1 A AC1

(1) Subject to motor specs. and current loop tuning.

PowerFlex DC Field Controller Specifications

Category	Specification	
Agency Certification	c-UL-us	Listed to UL508C and CAN/CSA C22.2 No. 14-05.
	CE	In conformity with the following European Directives: • EMC Directive (2004/108/EC) • Low Voltage Directive (2006/95/EC) Standards applied: • EN 50178 • EN 61800-3
	RCM	Certified by Rockwell Automation to be in conformity with the requirements of the applicable Australian legislation and the standards referenced: IEC 61800-3.
	Korean KC Registration	MSIP-REM-RAA-20P See the certificate of registration for specific drive catalog numbers that have this certification.(1)
	The drive is also designed to meet the following specifications: NFPA 70 - US National Electrical Code	

(1) See the product certifications website, http://www.rockwellautomation.com/rockwellautomation/certification/overview.page for declarations of conformity, certificates, and other certification details.

Category	Specification	
Drive Type	Full Wave Regen, 6 Pulse, Regulated Field Supply	
Protection	Heat sink Thermistor:	Monitored by microprocessor overtemp trip
	Drive Overcurrent Trip	Programmable, 0...250% of rated current (175% default)
	Line transients	Up to 2,000 volts peak per IEC 6100-4-5
	Control Logic Noise Immunity	Showering arc transients up to 1500V peak
	Power Ride-Thru	15 milliseconds at full load
	Logic Control Ride-Thru	0.5 seconds minimum, 2 seconds typical
Environment(1)	Altitude:	1000 m (3300 ft) max. without derating. De-rate output power by 1.2% for every 100 meters (328 ft) above 1000 meters (3300 ft).
	Maximum Surrounding Air Temperature IP20, NEMA Type Open:	0...50 °C (32...122 °F), typical. De-rate 1.25% for every 1 °C over 50 °C (122 °F), to 55 °C (131 °F). More cooling is required for temps. above 55 °C.
	Storage Temp. (all const.)	-25...+55 °C (-13...+131 °F)
	Atmosphere	**Important:** The field controller **must not** be installed in an area where the ambient atmosphere contains volatile or corrosive gas, vapors, or dust. If the drive is not going to be immediately installed, it must be stored in an area where it is not exposed to a corrosive atmosphere.
	Relative Humidity	Operating: 5...85% noncondensing Storage: 5...95% noncondensing
	Shock	15G peak for 11 ms duration (°1.0 ms)
	Vibration	0.152 mm (0.006 in.) displacement, 1G peak
Electrical	Input Voltages:	Control: 115V AC or 230V AC +/- 15%, 1 Phase (For details, see AC Input Voltages on page 24.)
	Input Frequency:	50/60 Hz +/- 5%
	Max. Rate of Change of Input Frequency:	2 Hz/s
	Output Current:	17...570 A
	Drive Overload Capability:	100% rated continuous current
	Field Output Voltage	Maximum field output voltage is 1.16 x AC input line voltage.
	Max. Short Circuit Rating:	100,000 A

(1) Field controllers must be installed in a Pollution Degree 2 environment.
(2) 115V AC input control power requires a jumper between terminals SA and SB for frame B field controllers only. For more information, see PowerFlex DC Drives and Field Controller Control Circuit Input Power on page 36.

PowerFlex DC Field Controller Specifications (continued)

Category	Specification	
Inputs	Analog Inputs	Three configurable, isolated, differential
		±10V, 0...10V, 0...20 mA or 4...20 mA.
		Resolution: 11 Bit + sign
	Digital Inputs	Eight standard configurable, four additional configurable with the I/O Expansion circuit board.
		Max Voltage +30V DC input, 200 mA (total current draw is the sum of encoder power, digital outputs, and any other loads that are connected to terminal 19)
Outputs	Analog Outputs	Two standard configurable, two additional configurable with the I/O Expansion circuit board. Sample rate 2 ms.
		±10V, 5 mA, bipolar (current is not bipolar)
		Resolution: 11 Bit + sign
	Digital Outputs	Four standard configurable, four additional configurable with the I/O Expansion circuit board.
		30V, 50 mA
	Relay Outputs	Two configurable, N.O. contacts
		Max. 250V AC, 1 A AC1

IP20 NEMA/UL Type Open Watts Loss

Watts loss and cooling fan attributes data that are shown in the following tables is based on the rated current of the drive.

PowerFlex DC Drives, Frame A

Drive Current Rating Code[1]		Total Watts Loss	Total Value for Fan		
@ 230V AC	@ 460V AC		AC Input Voltage	Rated Current (A)	Max. Airflow Noise Level
7P0	4P1	131	(No fan)		
9P0	6P0				
012	010				
020	014				
–	019				
029	027	186			
038	035	254	(Internal power supply)		80 m^3/h 37 dB(A)
055	045				
–	052				
073	073	408			160 m^3/h 45 dB(A)
093	086	476			
110	–				
–	100	553			
	129				

(1) See PowerFlex DC Drive Catalog Number Explanation on page 6, positions 8...10 for corresponding drive Hp rating, armature Amp rating, and field Amp rating.

PowerFlex DC Drives, Frame B

Drive			Total Value for Fans		
Current Rating Code[1]	AC Input Voltage	Total Watts Loss	AC Input Voltage	Rated Current (A)	Max. Airflow Noise Level
146	230	781	(Internal power supply)		340 m^3/h 48 dB(A)
180					
218		939			
265		1038			
360		1693			720 m^3/h 53 dB(A)
434					
167	460	781			340 m^3/h 48 dB(A)
207		939			
250		1038			
330		1248			
412		1693			720 m^3/h 53 dB(A)
067	575	400			340 m^3/h 48 dB(A)
101		553			
135		700			
270		1038			
405		1693			720 m^3/h 53 dB(A)

(1) See PowerFlex DC Drive Catalog Number Explanation on page 6, positions 8...10 for corresponding drive Hp rating, armature Amp rating, and field Amp rating.

PowerFlex DC Drives, Frame C

Drive			Total Value for Fans[1]		
Current Rating Code[2]	AC Input Voltage	Total Watts Loss	AC Input Voltage	Rated Current	Max. Airflow Noise Level
521	230	2143	230V AC	0.75 A	1,050 m^3/h 62.5 dB(A)
700		2700			
495	460	2143			
667		2590			
540	575	2300			
675		2620			
452	690	1700			
565		2300			

(1) Fans on frames C drives must be powered by an external 230V AC, 50/60 Hz power supply, which is connected to terminals U3 and V3.
(2) See PowerFlex DC Drive Catalog Number Explanation on page 6, positions 8...10 for corresponding drive Hp rating, armature Amp rating, and field Amp rating.

PowerFlex DC Drives, Frame D

Drive			Total Value for Fans								
			With Series A Fan(1)			With Series B Fan(2)			With Series C Fan(3)		
Current Rating Code(3)	AC Input Voltage	Total Watts Loss	AC Input Voltage	Rated Current	Max. Airflow Noise Level	AC Input Voltage	Rated Current	Max. Airflow Noise Level	AC Input Voltage	Rated Current	Max. Airflow Noise Level
875	230	2694	230V AC	2.4 A @ 50 Hz and 3.3 A @ 60 Hz	2,400 m^3/h 80 dB(A)	Three-phase 400V AC 50 Hz or 460V AC 60 Hz	1.15 A @ 50 Hz and 1.4 A @ 60 Hz	2,400 m^3/h @ 400VAC 50 Hz 2,800 m^3/h @ 460VAC 60 Hz 83 dB(A) @ 400VAC 50 Hz 2,000 m^3/h 86 dB(A) @ 460VAC 60 Hz 2,000 m^3/h	Three-phase 400V AC 50 Hz or 460V AC 60 Hz	1.25 A @ 50 Hz and 1.55 A @ 60 Hz	2,900 m^3/h @ 400VAC 50 Hz 3,400 m^3/h @ 460VAC 60 Hz 84 dB(A) @ 400VAC 50 Hz 90 dB(A) @ 460VAC 60 Hz
1K0		3284									
830	480	3200									
996		3568									
1K1		4189									
1K3		5229									
1K4		5117									
810	575	3122									
1K0		3819									
1K2		4679									
1K3		4879									
1K6		5720									
678	690	3174									
791		3582									
904		4028									
1K0		4064									
1K1		4509									
1K2		5368									
1K4		5543									
1K5		5886									

(1) Series A fans on frame D drives are powered by an external 230V AC, 50/60 Hz power supply, which is connected to terminals U3 and V3.
(2) Series B and Series C fans on frame D drives are powered by an external three-phase 400/460V AC, 50/60 Hz power supply, which is connected to terminals U3, V3, and W3.
(3) See PowerFlex DC Drive Catalog Number Explanation on page 6, positions 8...10 for corresponding drive Hp rating, armature Amp rating, and field Amp rating.

PowerFlex DC Field Controller

Frame Size	DC Output, Amps	Total Watts Loss	Total Value for Fans		
			AC Input Voltage	Rated Current	Max. Airflow Noise Level
A	17	131	(No fan)		
	60	254	(Internal power supply)		80 m^3/h 37 dB(A)
	120	476			160 m^3/h 45 dB(A)
B	245	781			320 m^3/h 48 dB(A)
	365	1038			
	570	1693			680 m^3/h 53 dB(A)

PowerFlex DC Standalone Regulator

Catalog Number (1)	Total Watts Loss	Total Value for Fans		
		AC Input Voltage	Rated Current	Max. Airflow Noise Level
23PMD4	303	(Internal power supply)		160 m^3/h 40 dB(A)
23PMD7	357			
23PMF4	374			
23PMF7	428			

(1) For a description of ratings, see catalog numbers in the PowerFlex DC Standalone Regulator and Gate Amplifier User Manual, publication 23P-UM001.

Additional Resources

These documents contain additional information concerning related products from Rockwell Automation.

Resource	Description
PowerFlex Digital DC Drive User Manual, publication 20P-UM001	Provides basic information that is required to install, start up, and troubleshoot the PowerFlex DC drive.
PowerFlex DC Field Controller Installation Instructions, publication 23PFC-IN001	Provides installation instructions for the PowerFlex DC field controller.
PowerFlex DC Fiber-optic Interface Option Module Installation Instructions, publication 20P-IN078	Provides installation instructions for the PowerFlex DC fiber-optic interface module.
PowerFlex DC Field Controller Programming Manual, publication 23PFC-PM001	Provides information on how to start up, program, and troubleshoot the PowerFlex DC field controller.
PowerFlex Digital DC Drive - Frame A Hardware Service Manual, publication 20P-TG001	Provides hardware test procedures and spare parts replacement instructions for Frame A PowerFlex DC drives and field controllers.
PowerFlex Digital DC Drive - Frame B Hardware Service Manual, publication 20P-TG002	Provides hardware test procedures and spare parts replacement instructions for Frame B PowerFlex DC drives and field controllers.
A Global Reference Guide for Reading Schematic Diagrams, publication 100-2.10	Provides a simple cross-reference of common schematic/wiring diagram symbols that are used throughout various parts of the world.
Guarding Against Electrostatic Damage, publication 8000-4.5.2	Explains the causes of electrostatic damage (ESD) and how to guard against its effects.
Preventive Maintenance of Industrial Control and Drive System Equipment, publication DRIVES-TD001	Provides a recommended preventative maintenance checklist.
EtherNet/IP Network Devices User Manual, ENET-UM006	Describes how to configure and use EtherNet/IP devices to communicate on the EtherNet/IP network.
Ethernet Reference Manual, ENET-RM002	Describes basic Ethernet concepts, infrastructure components, and infrastructure features.
System Security Design Guidelines Reference Manual, SECURE-RM001	Provides guidance on how to conduct security assessments, implement Rockwell Automation products in a secure system, harden the control system, manage user access, and dispose of equipment.
Industrial Components Preventive Maintenance, Enclosures, and Contact Ratings Specifications, publication IC-TD002	Provides a quick reference tool for Allen-Bradley industrial automation controls and assemblies.
Safety Guidelines for the Application, Installation, and Maintenance of Solid-state Control, publication SGI-1.1	Designed to harmonize with NEMA Standards Publication No. ICS 1.1-1987 and provides general guidelines for the application, installation, and maintenance of solid-state control in the form of individual devices or packaged assemblies incorporating solid-state components.
Industrial Automation Wiring and Grounding Guidelines, publication 1770-4.1	Provides general guidelines for installing a Rockwell Automation industrial system.
Product Certifications website, rok.auto/certifications.	Provides declarations of conformity, certificates, and other certification details.

You can view or download publications at rok.auto/literature.

Rockwell Automation Support

Use these resources to access support information.

Technical Support Center	Find help with how-to videos, FAQs, chat, user forums, and product notification updates.	rok.auto/support
Knowledgebase	Access Knowledgebase articles.	rok.auto/knowledgebase
Local Technical Support Phone Numbers	Locate the telephone number for your country.	rok.auto/phonesupport
Literature Library	Find installation instructions, manuals, brochures, and technical data publications.	rok.auto/literature
Product Compatibility and Download Center (PCDC)	Download firmware, associated files (such as AOP, EDS, and DTM), and access product release notes.	rok.auto/pcdc

Documentation Feedback

Your comments help us serve your documentation needs better. If you have any suggestions on how to improve our content, complete the form at rok.auto/docfeedback.

Allen-Bradley, Connected Components Workbench, DPI, DriveTools, expanding human possibility, FactoryTalk, PanelView, PowerFlex, Rockwell Automation, Rockwell Software, SCANPort, Studio 5000, and TorqProve are trademarks of Rockwell Automation, Inc.

ControlNet, DeviceNet, and EtherNet/IP are trademarks of ODVA, Inc.

Microsoft is a trademark of Microsoft Corporation.

Trademarks not belonging to Rockwell Automation are property of their respective companies.

Rockwell Automation maintains current product environmental compliance information on its website at rok.auto/pec.

Rockwell Otomasyon Ticaret A.Ş. Kar Plaza İş Merkezi E Blok Kat:6 34752, İçerenköy, İstanbul, Tel: +90 (216) 5698400 EEE Yönetmeliğine Uygundur

Connect with us.

rockwellautomation.com — expanding **human possibility**™

AMERICAS: Rockwell Automation, 1201 South Second Street, Milwaukee, WI 53204-2496 USA, Tel: (1) 414.382.2000, Fax: (1) 414.382.4444
EUROPE/MIDDLE EAST/AFRICA: Rockwell Automation NV, Pegasus Park, De Kleetlaan 12a, 1831 Diegem, Belgium, Tel: (32) 2 663 0600, Fax: (32) 2 663 0640
ASIA PACIFIC: Rockwell Automation, Level 14, Core F, Cyberport 3, 100 Cyberport Road, Hong Kong, Tel: (852) 2887 4788, Fax: (852) 2508 1846

Publication 20P-TD001K-EN-P - January 2021
Supersedes Publication 20P-TD001J-EN-P - December 2018

Copyright © 2021 Rockwell Automation, Inc. All rights reserved. Printed in the U.S.A.