Allen-Bradley

FLEX Ex System Certification

1797 Series

Reference Manual

Rockwell Automation

Important User Information

Solid state equipment has operational characteristics differing from those of electromechanical equipment. *Safety Guidelines for the Application, Installation and Maintenance of Solid State Controls* (Publication SGI-1.1 available from your local Rockwell Automation sales office or online at http://www.ab.com/manuals/gi) describes some important differences between solid state equipment and hard-wired electromechanical devices. Because of this difference, and also because of the wide variety of uses for solid state equipment, all persons responsible for applying this equipment must satisfy themselves that each intended application of this equipment is acceptable.

In no event will Rockwell Automation, Inc. be responsible or liable for indirect or consequential damages resulting from the use or application of this equipment.

The examples and diagrams in this manual are included solely for illustrative purposes. Because of the many variables and requirements associated with any particular installation, Rockwell Automation, Inc. cannot assume responsibility or liability for actual use based on the examples and diagrams.

No patent liability is assumed by Rockwell Automation, Inc. with respect to use of information, circuits, equipment, or software described in this manual.

Reproduction of the contents of this manual, in whole or in part, without written permission of Rockwell Automation, Inc. is prohibited.

Throughout this manual we may use notes to make you aware of safety considerations.

WARNING

Identifies information about practices or circumstances that can cause an explosion in a hazardous environment, which may lead to personal injury or death, property damage, or economic loss.

IMPORTANT

Identifies information that is critical for successful application and understanding of the product.

ATTENTION

Identifies information about practices or circumstances that can lead to personal injury or death, property damage, or economic loss. Attentions help you:

- identify a hazard
- avoid a hazard
- recognize the consequence

SHOCK HAZARD

Labels may be located on or inside the equipment to alert people that dangerous voltage may be present.

BURN HAZARD

Labels may be located on or inside the equipment to alert people that surfaces may be dangerous temperatures.

Changed Items

These items changed since the last printing of this FLEX Ex System Certification Reference Manual, publication 1797-6.5.6:

Updated Information	Page
1797-IE8H Section	45-2…45-4
1797-OE8H Section	48-2…48-4

To help you find new and updated information in this release of the manual, we have included change bars as shown next to this paragraph.

Notes:

What Is Intrinsically Safe?

According to Article 504 of the *National Electrical Code*, NFPA 70, an intrinsically safe (I/S) product is defined as one in which no spark or thermal effect generated during normal functioning and/or during specific fault conditions is able to ignite a given explosive atmosphere.

One example of an I/S product is FLEX Ex distributed I/O control.

What are Product Certifications?

A product certification is a guarantee that the product has been designed and manufactured with the required I/S specifications and protection. Considering the potential danger in hazardous locations, product certification is required for all I/S products.

Three Types of Product Certifications

In this reference manual, we describe three types of product certifications and how they relate to FLEX Ex products:

- CENELEC - European Electrotechnical Committee for Standardization. This is the standard in all European Union countries.
- UL and C-UL - Underwriters Laboratories (UL in the United States and C-UL in Canada)
- FM - Factory Mutual, another available certifying body in the United States

FLEX Ex products are certified to the appropriate CENELEC, UL, C-UL and FM standards, depending on the module.

What are Entity Parameters?

Entity parameters provide a system of quantifying and matching safe levels for voltage, current, inductance, and capacitance when connecting field devices and system devices together.

FLEX Ex uses entity parameters to quantify safe levels when connecting I/O modules to field devices. Inputs and outputs are specified with:

- open-circuit voltage (U_o or V_{oc})
- short-circuit current (I_o or I_{sc})
- allowed capacitance (C_o or C_a)
- allowed inductance (L_o or L_a)

Switched outputs are specified as if they were inputs.

Field devices using entity parameters are specified with:

- maximum input voltage (U_i or V_{max})

- maximum input current (I_i or I_{max})
- maximum internal capacitance (C_i)
- maximum internal inductance (L_i)

In use, the sum of all the input C_i and L_i in a control loop cannot exceed the C_o and L_o. Also, the sum of all the U_o and I_o cannot exceed the input U_i and I_i.

The following is a short explanation of how entity-based architectures help simplify IS system design.

Entity Parameters Example

An output channel and the valve it will drive are illustrated in the following figure. By comparing entity parameters, you can quickly determine the appropriate match.

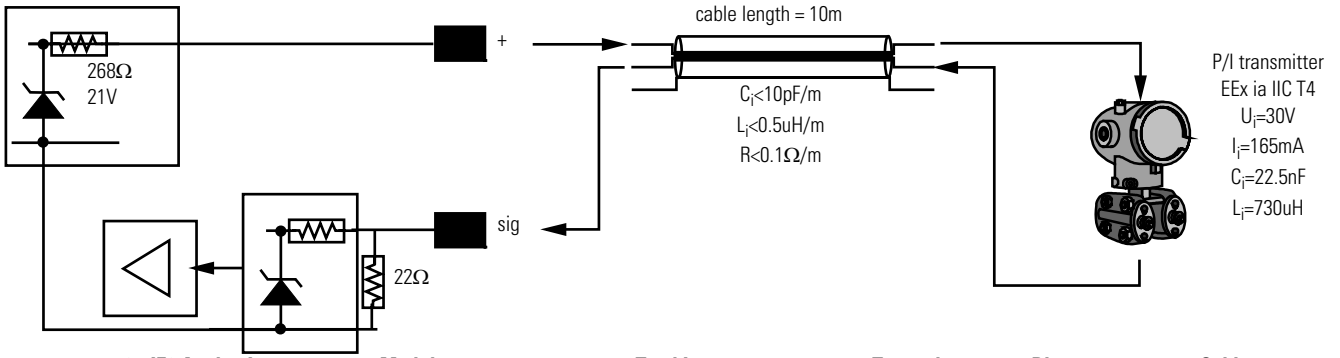

1797-IE8 Analog Input	Module		Total Loop		Transmitter		Distance		Cable
EEx ia/ib IIB/IIC T4	U_o	< or =	U_i	=	U_i				
U_o<23.7V	I_o	< or =	I_i	=	I_i				
I_o<93.5mA	C_a	> or =	C_i	=	C_i	+	(length	*	C_i per length)
	L_a	> or =	L_i	=	L_i	+	(length	*	L_a per length)
IIB C_a=560nF L_a=10mH									
IIC C_a=66nF L_a=2.5mH									

Module		Total Loop		Transmitter		Distance		Cable
U_o<23.7V	< or =	U_i=30V	=	U_i=30V				
I_o<92.5mA	< or =	I_i=165mA	=	I_i=165mA				
C_a=66nF	> or =	C_i=22.6nF	=	C_i=22.5nF	+	(10m	*	C_i=10pF/m)
L_a=2.5mH	> or =	L_i=735uH	=	L_i=730uH	+	(10m	*	L_a =0.5uH/m)

40052

In this example, the combination is compatible because the valve can withstand:

- U_i = 30V
- I_i = 165mA

These values are higher than what the 1797-IE8 can provide:

- U_o = 23.7V
- I_o = 93.5mA

In the same way, the valve is characterized by:

- C_i = 22.5nF
- L_i = 730µH

These values are lower than what the 1797-IE8 allows:

- C_o = 66nF
- L_o = 2.5mH

Intrinsic Safety Terminology

The following sections describe key terms used in this reference manual:

Hazardous Area Designation

A hazardous area is designated as any location in which a combustible material is or may be present in the atmosphere in sufficient concentration to produce an ignitable mixture.

The North American method identifies these areas by Class, Division, and Group while the IEC (CENELEC) designates these areas by Zone and Gas Group.

Recently, North America has adopted the Zone method of identifying hazardous locations as an option to the Division method.

Class Designation

Class identifies the type of hazardous atmosphere.

Class I	Gas or vapor
Class II	Dust
Class III	Fiber or flying (no group designation)

Division/Zone Designations

Division/Zone identifies the likelihood of a hazardous atmosphere being present.

	Division Method (North America)	IEC Standard Zone Method
Ignitable mixture present continuously (long periods)	Division 1	Zone 0 (Zone 20-Dust)
Ignitable mixture present intermittently		Zone 1 (Zone 21-Dust)
Ignitable mixture is not normally present	Division 2	Zone 2 (Zone 22-Dust)

Gas/Dust Groups

Hazardous locations are grouped according to their ignition properties.

Typical Gas	IEC Gas Group	North American Gas Group
Acetylene	IIC	A
Hydrogen	IIC	B
Ethylene	IIB	C
Propane	IIA	D
Methane[1]	I	D[1]
Metal Dust	-	E
Coal Dust	-	F
Grain Dust	-	-

1 Mining applications under jurisdiction of MSHA.

Use in North American Hazardous Locations

FLEX Ex modules are rated for installation in Class I Division 1 & 2, Groups A-D hazardous areas. They are also rated to connect to field devices that are located in Class I, II, or III, Groups A-G hazardous areas.

If FLEX Ex components are to be installed in a Class II or III location in your application, you can mount them in a suitable, dust-proof enclosure with the appropriate connectors, glans, and seals. For example, a NEMA 9 enclosure may be appropriate. The FLEX Ex modules are rated to connect to devices in Class II or III locations.

FLEX Ex modules are rated for installation in North American Class I Zone 1 & 2, Groups IIC, IIB, & IIA hazardous areas. They are also rated to connect to field devices that are located in North American Class I Zone 0, 1, & 2, Groups IIC, IIB, & IIA hazardous areas.

As always, observe local code requirements when applying your FLEX Ex application.

Use in CENELEC Hazardous Locations

FLEX Ex modules are rated for installation in European Zones 1, 2, and 22. They are also rated to connect to field devices that are located in European Zones 0, 1, 2, 21, and 22 hazardous areas. The FLEX Ex power supplies (1797-PS1E and -PS2E2) are rated for use in Zones 1 and 22.

If FLEX Ex components are to be installed in a European Zone method dust or fiber location in your application, you must mount them in an approved, dust-proof enclosure with the appropriate connectors, glans, and seals. Pepperl+Fuchs have three cabinets that are approved for use with FLEX Ex components in Zone 22 applications: IVK2-ISRPI-V8LC; IVK2-ISRPI-V8HYW; and IVK2-ISRPI-V16LC. P+F has offices in Twinsburg, Ohio, USA, and Mannheim, Germany. See their website at www.pepperl-fuchs.com.

As always, observe local code requirements when applying your FLEX Ex application.

Methods of Protection

The following techniques are rated by methods of protection.

Technique	Symbol for Protection Method				Division	Permitted Zone	Permitted Division
	Zone						
	IEC	CENELEC	NEC	CEC			
Oil Immersion	Ex o	EEx o	AEx o	Ex o		1 and 2	*
Pressurization	Ex p	EEx p	AEx p	Ex p	Type X, Y, Z	1 and 2	1 (X, Y) and 2 (Z)
Powder Filling	Ex q	EEx q	AEx q	Ex q		1 and 2	*
Flameproof	Ex d	EEx d	AEx d	Ex d		1 and 2	
Explosionproof					XP		1 and 2
Increased Safety	Ex e	EEx e	AEx e	Ex e		1 and 2	*
Intrinsic Safety Dual Fault Single Fault	 Ex ia Ex ib	 EEx ia EEx ib	 AEx ia AEx ib	 Ex ia Ex ib	IS	 0, 1, and 2 1 and 2	1 and 2
Non-Incendive Limited Energy Non-Sparking Enclosed Break Restricted Breathing Simplified Pressurization	 Ex nL Ex nV Ex nW Ex nR Ex nP	 EEx nL EEx nV EEx nW EEx nR EEx nP	 AEx nL AEx nV AEx nW AEx nR AEx nP	 Ex nL Ex nV Ex nW Ex nR Ex nP	NI	2	2
Encapsulation	Ex m	EEx m	Aex m	Ex m		1 and 2	*

* These protection methods are not recognized in the Division method. However, they may be suitable for some North American Division applications.

Temperature Category

The temperature category defines the maximum surface temperature of the device. Ratings are given with reference to 40°C ambient unless otherwise stated.

T1	450°C (842°F)	T3A	180°C (356°F)
T2	300°C (572°F)	T3B	165°C (329°F)
T2A	280°C (536°F)	T3C	160°C (320°F)
T2B	260°C (500°F)	T4	135°C (275°F)
T2C	230°C (446°F)	T4A	120°C (248°F)
T2D	215°C (419°F)	T5	100°C (212°F)
T3	200°C (392°F)	T6	85°C (185°F)

The additional temperature categories highlighted above are for North America only.

Understanding the Layout of this Manual

This reference manual consists of three sections:

- CENELEC Certification Information
- UL, C-UL Certification Information
- FM Certification Information

TIP The chapters in this document have been renumbered to include additional modules. If you were referred to a particular chapter from another document, use the tables below to determine the correct chapter number.

CENELEC Certification Information

	For Information On	Refer to this Chapter
CENELEC Certification Information	General CENELEC Certification Information	1
	ControlNet Ex System	2
	1797-TB3 FLEX Ex Terminal Base Unit	3
	1797-TB3S FLEX Ex Terminal Base Unit	4
	1797-IBN16 FLEX Ex 16 NAMUR Input Module	5
	1797-OB4D FLEX Ex 24V dc Non-Isolated Source 4 Output Module	6
	1797-IE8 FLEX Ex 8 Input Analog Module	7
	1797-IE8H FLEX Ex 8 Input HART Analog Module	8
	1797-IE8NF FLEX Ex 8 Input Analog Module with Noise Filter	9
	1797-OE8 FLEX Ex 8 Output Analog Module	10
	1797-OE8H FLEX Ex 8 Output HART Analog Module	11
	1797-IRT8 FLEX Ex Thermocouple/RTD Input Module	12
	1797-IJ2 FLEX Ex Frequency Input Module	13
	1797-PS1E FLEX Ex Power Supply	14
	1797-PS2E2 FLEX Ex Power Supply	15
	1797-ACNR15 ControlNet Ex Redundant Media Adapter	16
	1797-RPA ControlNet Ex Modular Repeater Adapter and 1797-RPFM Fiber Repeater Module, Medium Distance	17
	1797-BIC Bus Isolator Module and 1797-CEC Flexbus Connector	18
	1797-BCNR Redundant ControlNet Ex Barrier	19

UL, cUL Certification Information

	For Information On	Refer to this Chapter
UL, cUL Certification Information	General UL, C-UL Certification Information	20
	ControlNet Ex System	21
	1797-TB3 FLEX Ex Terminal Base Unit	22
	1797-TB3S FLEX Ex Terminal Base Unit	23
	1797-IBN16 FLEX Ex 16 NAMUR Input Module	24
	1797-OB4D FLEX Ex 24V dc Non-Isolated Source 4 Output Module	25
	1797-IE8 FLEX Ex 8 Input Analog Module	26
	1797-IE8H FLEX Ex 8 Input HART Analog Module	27
	1797-IE8NF FLEX Ex 8 Input Analog Module with Noise Filter	28
	1797-OE8 FLEX Ex 8 Output Analog Module	29
	1797-OE8H FLEX Ex 8 Output HART Analog Module	30
	1797-IRT8 FLEX Ex Thermocouple/RTD Input Module	31
	1797-IJ2 FLEX Ex Frequency Input Module	32
	1797-PS1N FLEX Ex Power Supply	33
	1797-PS2N2 FLEX Ex Power Supply	34
	1797-ACNR15 ControlNet Ex Redundant Media Adapter	35
	1797-RPA ControlNet Ex Modular Repeater Adapter and 1797-RPFM Fiber Repeater Module, Medium Distance	36
	1797-BCNR Redundant ControlNet Ex Barrier	37

FM Certification Information

	For Information On	Refer to this Chapter
FM Certification Information	General FM Certification Information	38
	ControlNet Ex System	39
	1797-TB3 FLEX Ex Terminal Base Unit	40
	1797-TB3S FLEX Ex Terminal Base Unit	41
	1797-IBN16 FLEX Ex 16 NAMUR Input Module	42
	1797-OB4D FLEX Ex 24V dc Non-Isolated Source 4 Output Module	43
	1797-IE8 FLEX Ex 8 Input Analog Module	44
	1797-IE8H FLEX Ex 8 Input HART Analog Module	45
	1797-IE8NF FLEX Ex 8 Input Analog Module with Noise Filter	46
	1797-OE8 FLEX Ex 8 Output Analog Module	47
	1797-OE8H FLEX Ex 8 Output HART Analog Module	48
	1797-IRT8 FLEX Ex Thermocouple/RTD Input Module	49
	1797-IJ2 FLEX Ex Frequency Input Module	50
	1797-PS1N FLEX Ex Power Supply	51
	1797-PS2N2 FLEX Ex Power Supply	52
	1797-ACNR15 ControlNet Ex Redundant Media Adapter	53
	1797-RPA ControlNet Ex Modular Repeater Adapter and 1797-RPFM Fiber Repeater Module, Medium Distance	54
	1797-BIC Bus Isolator Module and 1797-CEC Flexbus Connector	55

Notes:

CENELEC Information

Chapter 1

General CENELEC Certification Information

General Installation 1-1
Installation in Zone 1 1-2
Installation in Zone 22 1-2
Electrostatic Charge 1-2
European Community Directive Compliance 1-2
EMC Directive 1-2
LVD Directive 1-2
ATEX Directive 1-3
Repair 1-3
Attention: Avoid electrostatic charge.. 1-3
About Zone 22 Junction Boxes (Cabinets) 1-4

Chapter 2

ControlNet Ex System

ControlNet Ex System Diagram 2-2
Describing the ControlNet Ex System Diagram 2-3
Certified Equivalent ControlNet Ex System Diagram Items . . . 2-4
Installation in Zone 1 2-5
Installation in Zone 22 2-5
Electrostatic Charge 2-5
Repair 2-5
Attention: Avoid electrostatic charge.. 2-5
General Specifications 2-6

Chapter 3

1797-TB3 FLEX Ex Terminal Base Unit

General Information 3-1
Module Installation 3-1
Inputs 3-2
Description 3-2
Intrinsically Safe Specifications 3-3

Chapter 4

1797-TB3S FLEX Ex Terminal Base Unit

General Information 4-1
Module Installation 4-1
Inputs 4-2
Description 4-2
Intrinsically Safe Specifications 4-3

1797-IBN16 FLEX Ex 16 NAMUR Input Module

Chapter 5

General Information 5-1
Module Installation 5-1
Inputs 5-1
Wiring to a 1797-TB3 or -TB3S Terminal Base Unit. 5-2
Intrinsically Safe Specifications 5-2
CE/CENELEC I/O Entity Parameters (Each Channel) 5-3

1797-OB4D FLEX Ex 24V dc Non-Isolated Source 4 Output Module

Chapter 6

General Information 6-1
Module Installation 6-1
Outputs. 6-1
Wiring to a 1797-TB3 or -TB3S Terminal Base Unit. 6-1
Intrinsically Safe Specifications 6-2
CE/CENELEC I/O Entity Parameters. 6-2

1797-IE8 FLEX Ex 8 Input Analog Module

Chapter 7

General Information 7-1
Module Installation 7-1
Inputs 7-1
Wiring to a 1797-TB3 or -TB3S Terminal Base Unit. 7-2
Intrinsically Safe Specifications 7-2
CE/CENELEC I/O Entity Parameters. 7-3

1797-IE8H FLEX Ex 8 Input HART Analog Module

Chapter 8

General Information 8-1
Module Installation 8-1
Inputs 8-1
Wiring to a 1797-TB3 or -TB3S Terminal Base Unit. 8-2
Intrinsically Safe Specifications 8-2
CE/CENELEC I/O Entity Parameters. 8-3

1797-IE8NF FLEX Ex 8 Input Analog Module with Noise Filter

Chapter 9

General Information 9-1
Module Installation 9-1
Inputs 9-1
Wiring to a 1797-TB3 or -TB3S Terminal Base Unit. 9-2
Intrinsically Safe Specifications 9-2
CE/CENELEC I/O Entity Parameters. 9-3

Chapter 10

1797-OE8 FLEX Ex 8 Output Analog Module

General Information 10-1
Module Installation 10-1
Outputs 10-1
Wiring to a 1797-TB3 or -TB3S Terminal Base Unit 10-1
General Specifications 10-2
CE, CENELEC I/O Entity Parameters 10-2

Chapter 11

1797-OE8H FLEX Ex 8 Output HART Analog Module

General Information 11-1
Module Installation 11-1
Outputs 11-1
Wiring to a 1797-TB3 or -TB3S Terminal Base Unit 11-1
General Specifications 11-2
CE, CENELEC I/O Entity Parameters 11-2

Chapter 12

1797-IRT8 FLEX Ex Thermocouple/RTD Input Module

General Information 12-1
Module Installation 12-1
Inputs 12-1
Wiring to a 1797-TB3 or -TB3S Terminal Base Unit 12-2
Intrinsically Safe Specifications 12-2
CE/CENELEC I/O Entity Parameters 12-3

Chapter 13

1797-IJ2 FLEX Ex Frequency Input Module

General Information 13-1
Module Installation 13-1
Inputs 13-1
Wiring to a 1797-TB3 or -TB3S Terminal Base Unit 13-2
Intrinsically Safe Specifications 13-2
CE/CENELEC Input I/O Entity Parameters 13-3
- Channel 0 Frequency Input 13-3
- Channel 1 Frequency Input 13-4
- Channel 0 Gate Input 13-5
- Channel 1 Gate Input 13-5

Relay Outputs 13-6

Chapter 14

1797-PS1E FLEX Ex Power Supply

Installation in Zone 1 14-1
Installation in Zone 22 14-1
Outputs 14-1
Typical Wiring Configurations 14-2
Intrinsically Safe Specifications 14-2

Chapter 15

1797-PS2E2 FLEX Ex Power Supply
Installation in Zone 1 15-1
Installation in Zone 22 15-1
Outputs 15-1
Typical Wiring Configurations 15-2
Intrinsically Safe Specifications 15-2

Chapter 16

1797-ACNR15 ControlNet Ex Redundant Media Adapter
Module Installation 16-1
Inputs/Outputs 16-1
Intrinsically Safe Specifications 16-2

Chapter 17

1797-RPA ControlNet Ex Modular Repeater Adapter and 1797-RPFM Fiber Repeater Module, Medium Distance
Module Installation 17-1
Inputs/Outputs 17-1
Intrinsically Safe Specifications 17-2

Chapter 18

1797-BIC Bus Isolator Module and 1797-CEC Flexbus Connector
General Installation 18-1
Inputs/Outputs 18-2
Intrinsically Safe Specifications 18-3

Chapter 19

1797-BCNR Redundant ControlNet Ex Barrier
Description 19-1
Inputs/Outputs 19-1
Intrinsically Safe Specifications 19-2
Repair 19-2

UL, C-UL Information

Chapter 20

General UL, C-UL Certification Information

Module Installation 20-1
Installation in Division 1/
Zone 1. 20-2
Electrostatic Charge 20-2
UL, C-UL I/O Entity Parameters. 20-2
Repair 20-2
Attention: Avoid electrostatic charge.. 20-2

Chapter 21

ControlNet Ex System

ControlNet Ex System Diagram 21-2
Describing the ControlNet Ex System Diagram 21-3
Certified Equivalent ControlNet Ex System Diagram Items . . 21-4
Installation in Division 1/
Zone 1. 21-5
Electrostatic Charge 21-6
Repair 21-6
Attention: Avoid electrostatic charge.. 21-6

Chapter 22

1797-TB3 FLEX Ex Terminal Base Unit

General Information 22-1
Module Installation 22-1
Installation in Division 1/
Zone 1. 22-1
Inputs 22-2
Description 22-2
Intrinsically Safe Specifications 22-3

Chapter 23

1797-TB3S FLEX Ex Terminal Base Unit

General Information 23-1
Module Installation 23-1
Installation in Division 1/
Zone 1. 23-1
Inputs 23-2
Description 23-2
Intrinsically Safe Specifications 23-3

1797-IBN16 FLEX Ex 16 NAMUR Input Module

Chapter 24

General Information 24-1
Module Installation 24-1
Inputs 24-1
Wiring to a 1797-TB3 or -TB3S Terminal Base Unit. 24-1
Intrinsically Safe Specifications 24-2
UL, C-UL I/O Entity Parameters. 24-3
Table 1: Entity Values for Field Device Connections 24-3
Table 2: Flexbus Entity Values Which are Allowed for the Next FLEX Ex I/O Module 24-4
Table 3: Flexbus Entity Values for this Module. 24-4

1797-OB4D FLEX Ex 24V dc Non-Isolated Source 4 Output Module

Chapter 25

General Information 25-1
Module Installation 25-1
Outputs. 25-1
Wiring to a 1797-TB3 or -TB3S Terminal Base Unit. 25-1
Intrinsically Safe Specifications 25-2
UL, C-UL I/O Entity Parameters. 25-2
Table 1: Entity Values for Field Device Connections 25-3
Table 2: Flexbus Entity Values Which are Allowed for the Next FLEX Ex I/O Module 25-4
Table 3: Flexbus Entity Values for this Module. 25-4

1797-IE8 FLEX Ex 8 Input Analog Module

Chapter 26

General Information 26-1
Module Installation 26-1
Inputs 26-1
Wiring to a 1797-TB3 or -TB3S Terminal Base Unit. 26-1
Intrinsically Safe Specifications 26-2
UL, C-UL I/O Entity Parameters. 26-3
Table 1: Entity Values for Field Device Connections 26-3
Table 2: Flexbus Entity Values Which are Allowed for the Next FLEX Ex I/O Module 26-4
Table 3: Flexbus Entity Values for this Module. 26-4

1797-IE8H FLEX Ex 8 Input HART Analog Module

Chapter 27

General Information 27-1
Module Installation 27-1
Inputs 27-1
Wiring to a 1797-TB3 or -TB3S Terminal Base Unit. 27-1
Intrinsically Safe Specifications 27-2
UL, C-UL I/O Entity Parameters. 27-3
Table 1: Entity Values for Field Device Connections 27-3
Table 2: Flexbus Entity Values Which are Allowed for the Next FLEX Ex I/O Module 27-4
Table 3: Flexbus Entity Values for this Module. 27-4

1797-IE8NF FLEX Ex 8 Input Analog Module with Noise Filter

Chapter 28

General Information 28-1
Module Installation 28-1
Inputs 28-1
Wiring to a 1797-TB3 or -TB3S Terminal Base Unit. 28-1
Intrinsically Safe Specifications 28-2
UL, C-UL I/O Entity Parameters. 28-3
Table 1: Entity Values for Field Device Connections 28-3
Table 2: Flexbus Entity Values Which are Allowed for the Next FLEX Ex I/O Module 28-4
Table 3: Flexbus Entity Values for this Module. 28-4

1797-OE8 FLEX Ex 8 Output Analog Module

Chapter 29

General Information 29-1
Module Installation 29-1
Outputs. 29-1
Wiring to a 1797-TB3 or -TB3S Terminal Base Unit. 29-1
Intrinsically Safe Specifications 29-2
UL, C-UL I/O Entity Parameters. 29-2
Table 1: Entity Values for Field Device Connections 29-2
Table 2: Flexbus Entity Values Which are Allowed for the Next FLEX Ex I/O Module 29-4
Table 3: Flexbus Entity Values for this Module. 29-4

1797-OE8H FLEX Ex 8 Output HART Analog Module

Chapter 30

General Information 30-1
Module Installation 30-1
Outputs 30-1
Wiring to a 1797-TB3 or -TB3S Terminal Base Unit 30-1
Intrinsically Safe Specifications 30-2
UL, C-UL I/O Entity Parameters 30-2
Table 1: Entity Values for Field Device Connections 30-2
Table 2: Flexbus Entity Values Which are Allowed for the Next FLEX Ex I/O Module 30-4
Table 3: Flexbus Entity Values for this Module 30-4

1797-IRT8 FLEX Ex Thermocouple/RTD Input Module

Chapter 31

General Information 31-1
Module Installation 31-1
Inputs 31-1
Wiring to a 1797-TB3 or -TB3S Terminal Base Unit 31-2
Intrinsically Safe Specifications 31-2
UL, C-UL I/O Entity Parameters 31-3
Table 1: Entity Values for Field Device Connections 31-3
Table 2: Flexbus Entity Values Which are Allowed for the Next FLEX Ex I/O Module 31-5
Table 3: Flexbus Entity Values for this Module 31-5

1797-IJ2 FLEX Ex Frequency Input Module

Chapter 32

General Information 32-1
Module Installation 32-1
Inputs 32-1
Wiring to a 1797-TB3 or -TB3S Terminal Base Unit 32-1
Intrinsically Safe Specifications 32-2
UL, C-UL I/O Entity Parameters 32-2
Table 1: Entity Values for Field Device Connections 32-3
Table 2: Flexbus Entity Values Which are Allowed for the Next FLEX Ex I/O Module 32-4
Table 3: Flexbus Entity Values for this Module 32-4

1797-PS1N FLEX Ex Power Supply

Chapter 33

Installation in Division 1/ Zone 1 33-1
Outputs 33-1
Typical Wiring Configurations 33-1
Intrinsically Safe Specifications 33-2
UL, C-UL I/O Entity Parameters 33-2
Table 1: Entity Values for Field Device Connections 33-2

1797-PS2N2 FLEX Ex Power Supply

Chapter 34

Installation in Division 1/
Zone 1. 34-1
Outputs. 34-1
Typical Wiring Configurations. 34-1
Intrinsically Safe Specifications 34-2
UL, C-UL I/O Entity Parameters. 34-2
Table 1: Entity Values for Field Device Connections 34-2

1797-ACNR15 ControlNet Ex Redundant Media Adapter

Chapter 35

Module Installation 35-1
Inputs/Outputs 35-1
General Specifications 35-1
UL, cUL Entity Parameters and Requirements 35-2
UL, C-UL I/O Entity Parameters and Requirements 35-2
Table 2: Flexbus Entity Values Which are Allowed for the Next FLEX Ex I/O Module 35-2

1797-RPA ControlNet Ex Modular Repeater Adapter and 1797-RPFM Fiber Repeater Module, Medium Distance

Chapter 36

Module Installation 36-1
Inputs/Outputs 36-1
Intrinsically Safe Specifications 36-2
UL, cUL Entity Parameters and Requirements 36-2

1797-BCNR Redundant ControlNet Ex Barrier

Chapter 37

Description. 37-1
Inputs/Outputs 37-1
Intrinsically Safe Specifications 37-2
Repair 37-2

FM Information

Chapter 38

General FM Certification Information

Module Installation 38-1
Installation in Division 1/ Zone 1. 38-2
Electrostatic Charge 38-3
FM I/O Entity Parameters 38-3
Repair 38-3
Attention: Avoid electrostatic charge.. 38-3

Chapter 39

ControlNet Ex System

ControlNet Ex System Diagram 39-2
Describing the ControlNet Ex System Diagram 39-3
Certified Equivalent ControlNet Ex System Diagram Items . . 39-4

Chapter 40

1797-TB3 FLEX Ex Terminal Base Unit

Module Installation 40-1
Installation in Division 1/
Zone 1. 40-1
Inputs 40-2
Description 40-2
Intrinsically Safe Specifications 40-3

Chapter 41

1797-TB3S FLEX Ex Terminal Base Unit

Module Installation 41-1
Installation in Division 1/
Zone 1. 41-1
Inputs 41-2
Description 41-2
Intrinsically Safe Specifications 41-3

Chapter 42

1797-IBN16 FLEX Ex 16 NAMUR Input Module

Inputs 42-1
Wiring to a 1797-TB3 or -TB3S Terminal Base Unit. 42-1
Intrinsically Safe Specifications 42-2
FM I/O Entity Parameters (Each Channel) 42-2
Table 1: Entity Values for Field Device Connections 42-2
Table 2: Flexbus Entity Values Which are Allowed for the Next FLEX Ex I/O Module 42-4
Table 3: Flexbus Entity Values for this Module. 42-4

1797-OB4D FLEX Ex 24V dc Non-Isolated Source 4 Output Module

Chapter 43

Outputs 43-1
Wiring to a 1797-TB3 or -TB3S Terminal Base Unit 43-1
Intrinsically Safe Specifications 43-2
FM I/O Entity Parameters 43-2
Table 1: Entity Values for Field Device Connections 43-2
Table 2: Flexbus Entity Values Which are Allowed for the Next FLEX Ex I/O Module 43-3
Table 3: Flexbus Entity Values for this Module 43-3

1797-IE8 FLEX Ex 8 Input Analog Module

Chapter 44

Inputs 44-1
Wiring to a 1797-TB3 or -TB3S Terminal Base Unit 44-1
Intrinsically Safe Specifications 44-2
FM I/O Entity Parameters 44-2
Table 1: Entity Values for Field Device Connections 44-3
Table 2: Flexbus Entity Values Which are Allowed for the Next FLEX Ex I/O Module 44-4
Table 3: Flexbus Entity Values for this Module 44-4

1797-IE8H FLEX Ex 8 Input HART Analog Module

Chapter 45

Inputs 45-1
Wiring to a 1797-TB3 or -TB3S Terminal Base Unit 45-1
Intrinsically Safe Specifications 45-2
FM I/O Entity Parameters 45-2
Table 1: Entity Values for Field Device Connections 45-3
Table 2: Flexbus Entity Values Which are Allowed for the Next FLEX Ex I/O Module 45-4
Table 3: Flexbus Entity Values for this Module 45-4

1797-IE8NF FLEX Ex 8 Input Analog Module with Noise Filter

Chapter 46

Inputs 46-1
Wiring to a 1797-TB3 or -TB3S Terminal Base Unit 46-1
Intrinsically Safe Specifications 46-2
FM I/O Entity Parameters 46-2
Table 1: Entity Values for Field Device Connections 46-3
Table 2: Flexbus Entity Values Which are Allowed for the Next FLEX Ex I/O Module 46-4
Table 3: Flexbus Entity Values for this Module 46-4

1797-OE8 FLEX Ex 8 Output Analog Module

Chapter 47

Outputs 47-1
Wiring to a 1797-TB3 or -TB3S Terminal Base Unit 47-1
Intrinsically Safe Specifications 47-2
FM I/O Entity Parameters 47-2
Table 1: Entity Values for Field Device Connections 47-2
Table 2: Flexbus Entity Values Which are Allowed for the Next FLEX Ex I/O Module 47-3
Table 3: Flexbus Entity Values for this Module 47-3

1797-OE8H FLEX Ex 8 Output HART Analog Module

Chapter 48

Outputs 48-1
Wiring to a 1797-TB3 or -TB3S Terminal Base Unit 48-1
Intrinsically Safe Specifications 48-2
FM I/O Entity Parameters 48-2
Table 1: Entity Values for Field Device Connections 48-2
Table 2: Flexbus Entity Values Which are Allowed for the Next FLEX Ex I/O Module 48-3
Table 3: Flexbus Entity Values for this Module 48-3

1797-IRT8 FLEX Ex Thermocouple/RTD Input Module

Chapter 49

Inputs 49-1
Wiring to a 1797-TB3 or -TB3S Terminal Base Unit 49-1
Intrinsically Safe Specifications 49-2
FM I/O Entity Parameters 49-2
Table 1: Entity Values for Field Device Connections 49-2
Table 2: Flexbus Entity Values Which are Allowed for the Next FLEX Ex I/O Module 49-4
Table 3: Flexbus Entity Values for this Module 49-4

1797-IJ2 FLEX Ex Frequency Input Module

Chapter 50

Inputs 50-1
Wiring to a 1797-TB3 or -TB3S Terminal Base Unit 50-1
Intrinsically Safe Specifications 50-2
FM Input I/O Entity Parameters 50-2
Table 1: Entity Values for Field Device Connections 50-2
Table 2: Flexbus Entity Values Which are Allowed for the Next FLEX Ex I/O Module 50-4
Table 3: Flexbus Entity Values for this Module 50-4

1797-PS1N FLEX Ex Power Supply

Chapter 51

Installation in Division 1/
Zone 1 51-1
Outputs 51-1
Typical Wiring Configurations 51-1
Intrinsically Safe Specifications 51-2
FM I/O Entity Parameters 51-2
Table 1: Entity Values for Field Device Connections 51-2

1797-PS2N2 FLEX Ex Power Supply

Chapter 52

Installation in Division 1/
Zone 1 52-1
Outputs 52-1
Typical Wiring Configurations 52-1
Intrinsically Safe Specifications 52-2
FM I/O Entity Parameters 52-2
Table 1: Entity Values for Field Device Connections 52-2

1797-ACNR15 ControlNet Ex Redundant Media Adapter

Chapter 53

Module Installation 53-1
Inputs/Outputs 53-1
Intrinsically Safe Specifications 53-1
FM Entity Parameters and Requirements 53-2
FM I/O Entity Parameters and Requirements 53-2
Table 2: Flexbus Entity Values Which are Allowed for the Next FLEX Ex I/O Module 53-2

1797-RPA ControlNet Ex Modular Repeater Adapter and 1797-RPFM Fiber Repeater Module, Medium Distance

Chapter 54

Module Installation 54-1
Inputs/Outputs 54-1
Intrinsically Safe Specifications 54-2
FM Entity Parameters and Requirements 54-2

1797-BIC Bus Isolator Module and 1797-CEC Flexbus Connector

Chapter 55

General Installation 55-1
Inputs/Outputs 55-3
Intrinsically Safe Specifications 55-3

Notes:

General CENELEC Certification Information

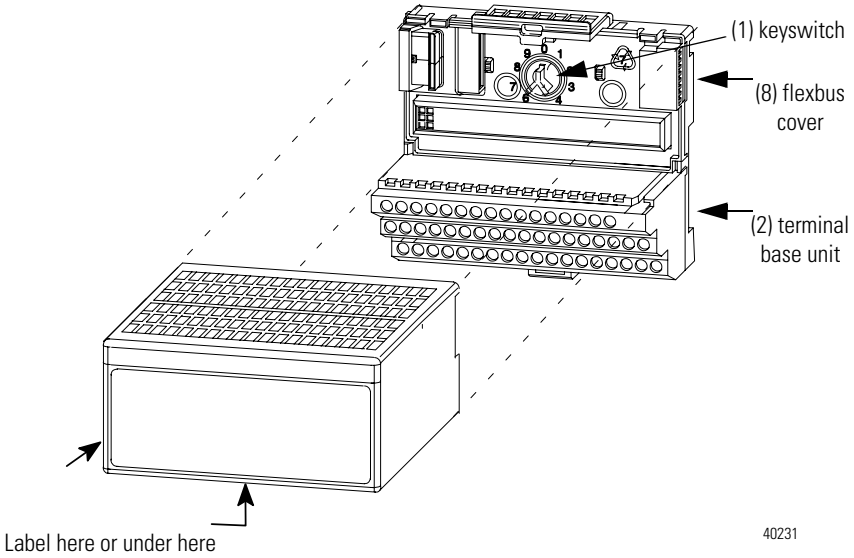

General Installation

FLEX Ex I/O modules must be used with a 1797-TB3 or -TB3S intrinsically safe terminal base unit.

You will need to rotate the keyswitch (1) to the correct position depending on the module. Refer to the module's installation instructions for more information. **Do not change the position of the keyswitch after wiring the terminal base unit.**

Make certain that you only connect terminal base units to other intrinsically safe system modules, adapters or power supplies to maintain the integrity of the intrinsically-safe backplane.

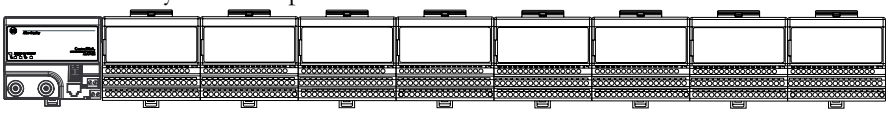

Remove cap plug and attach another intrinsically safe terminal base unit to the right of the terminal base unit (2) if required.

Do not remove the flexbus cover (8) on the right-most terminal base unit.

Installation in Zone 1

Modules, adapters, and terminal base units must not be exposed to the environment. Provide a suitable enclosure. The modules, adapters, and terminal base units have a protection factor of IP20.

ATTENTION

Modules, adapters, and terminal base units cannot be used in an intrinsically safe environment after they have been exposed to non-intrinsically safe signals.

Installation in Zone 22

When the ControlNet Ex system is installed in Zone 22, all system components (except the coax cable and ControlNet Ex taps) must be installed in cabinets of the following type: IVK-ISRPI-V16LC; IVK-ISRPI-V8HYW; or IVK-ISRPI-V8LC. For more information on these cabinets, see page 1-4.

Electrostatic Charge

Protect the system against electrostatic charge. Post a sign near each module: **Attention! Avoid electrostatic charge.** For your convenience, a sign which can be cut out and posted is included in this chapter.

European Community Directive Compliance

If this product has the CE mark it is approved for installation within the European Community or EEA regions. It has been designed and tested to meet the following directives.

EMC Directive

All system components are tested to meet the Council Directive 89/336/EEC Electromagnetic Compatibility (EMC), as amended by 92/31/EC and 93/68/EEC, by applying the following standards as appropriate:

- EN61000-6-4:2001, Electromagnetic Compatibility (EMC) - Part 6-4: Generic Standards - Emission Standard for Industrial Environments (Class A)
- EN61000-6-2:2001, Electromagnetic Compatibility (EMC) - Part 6-2: Generic Standards - Immunity for Industrial Environments
- EN61326:1997 + A1-A2, Electrical Equipment for Measurement, Control, and Laboratory Use - Industrial EMC Requirements

LVD Directive

All power supplies are tested to meet the Council Directive 73/23/EEC Low Voltage Directive, as amended by 93/68/EEC (LVD), by applying the following standards as appropriate:

- EN50178:1997, Electronic Equipment for Use in Power Installations

ATEX Directive

All system components are tested to meet the Council Directive 94/9/EC Equipment and Protective Systems Intended for Use in Potentially Explosive Atmospheres by applying the following standards, as appropriate:

- EN50014:1997 + A1-A2, Electrical Apparatus for Potentially Explosive Atmospheres
- EN50018:1995, Electrical Apparatus for Potentially Explosive Atmospheres - Flameproof Enclosure “d”
- EN50019:1996, Electrical Apparatus for Potentially Explosive Atmospheres - Increased Safety “e”
- EN50020:1994, Electrical Apparatus for Potentially Explosive Atmospheres - Intrinsic Safety “i”
- EN50021: 1999, Electrical Apparatus for Potentially Explosive Atmospheres - Type of Protection “n”
- EN50281-1-1:1998 + A1, Electrical Apparatus for Use in the Presence of Combustible Dust - Part 1-1: Protection by Enclosure
- EN50284:1999, Special requirements for construction, test and marking of electrical apparatus of equipment group II, category 1G

The power supply is tested to meet the Council Directive 76/117/EC Electrical Apparatus for Explosive Atmospheres by applying the following standards:

- EN50014:1977 + A1-A5, Electrical Apparatus for Potentially Explosive Atmospheres
- EN50018:1977 + A1-A3, Electrical Apparatus for Potentially Explosive Atmospheres - Flameproof Enclosure “d”
- EN50019:1977 + A1-A5, Electrical Apparatus for Potentially Explosive Atmospheres - Increased Safety “e”
- EN50020:1977 + A1-A5, Electrical Apparatus for Potentially Explosive Atmospheres - Intrinsic Safety “i”

Repair

System components are not field-repairable. Any attempt to open a system component will void the warranty and the IS certification. If repair is necessary, return the system component to the manufacturer.

Attention: Avoid electrostatic charge.

ATTENTION

When installing, commissioning, operating, and maintaining devices with intrinsically safe circuits, the certificate of conformity of the devices, as well as the applicable national and local construction, installation, and operating regulations must be heeded (in Germany DIN EN 50020, DIN VDE 0165).

ATTENTION

Repairs to devices having intrinsically safe circuitry may only be carried out by qualified personnel in accordance with the valid regulations (Elex V).

About Zone 22 Junction Boxes (Cabinets)

Pepperl+Fuchs junction boxes (type IVK2-ISRPI-V8LC, IVK2-ISRPI-V8HYW, or IVK2-ISPRI-V16LC) ensures the basic protection for the intrinsically safe apparatus of the FLEX Ex system for use in Zone 22. It corresponds with category 3D according to RL 94/9 EG and with the type label marked with the following information:

Pepperl+Fuchs GmbH
68301 Mannheim
IVK2-ISRPI-V8LC (or IVK2-ISRPI-V8HYW or IVK2-ISRPI-V16LC)
EX (Hexagon) II 3D IP54 T 70°C
CE
Serial (manufacturing) number
Model

The maximum dissipation is limited to 60W for the IVK2-ISRPI-V8LC and IVK2-ISRPI-V8HYW junction boxes and 120W for the IVK2-ISRPI-V16LC junction box.

The maximum ambient temperature for the junction boxes complies with the internal dissipation. It must be guaranteed that the cabinet internal temperature 70°C is not exceeded (requirement to the installed FLEX Ex equipment). For example, the IVK2-ISRPI-V8LC junction box has a maximum ambient temperature of 45°C with maximum mounting.

All cable entries, which are not equipped with a cable, must be provided with a seal designated for it (IP54). Drillings in the housing, which are not used due to less assembly, must be closed seal (IP54).

Close the junction box with the provided key after the assembly and mounting. If the junction box must be opened for maintenance purposes during operation, exercise care to prevent dust from penetrating inside of the enclosure.

ControlNet Ex System

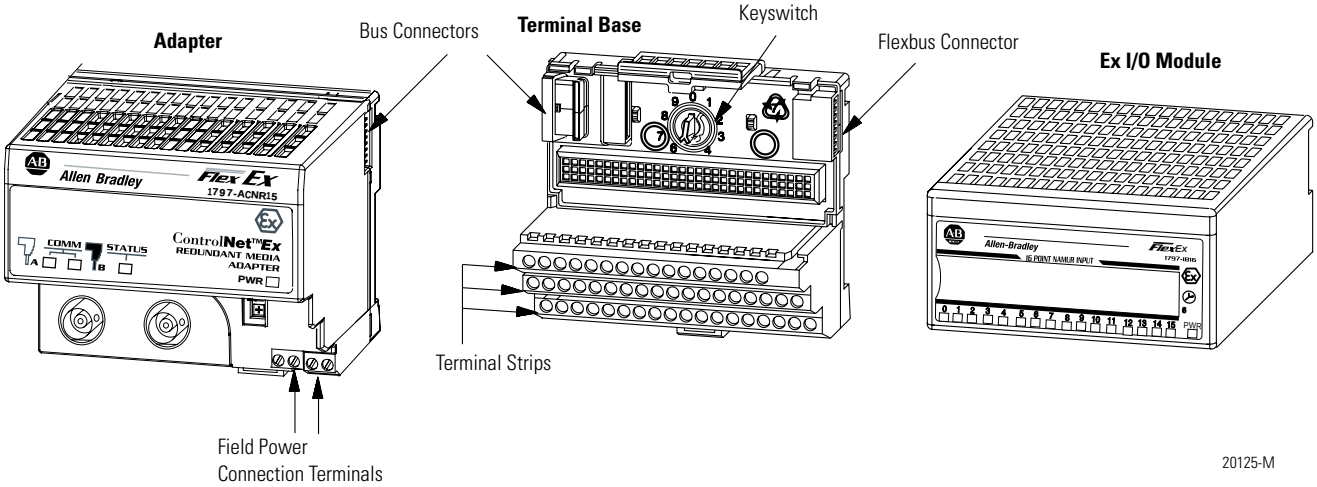

ControlNet Ex System Diagram

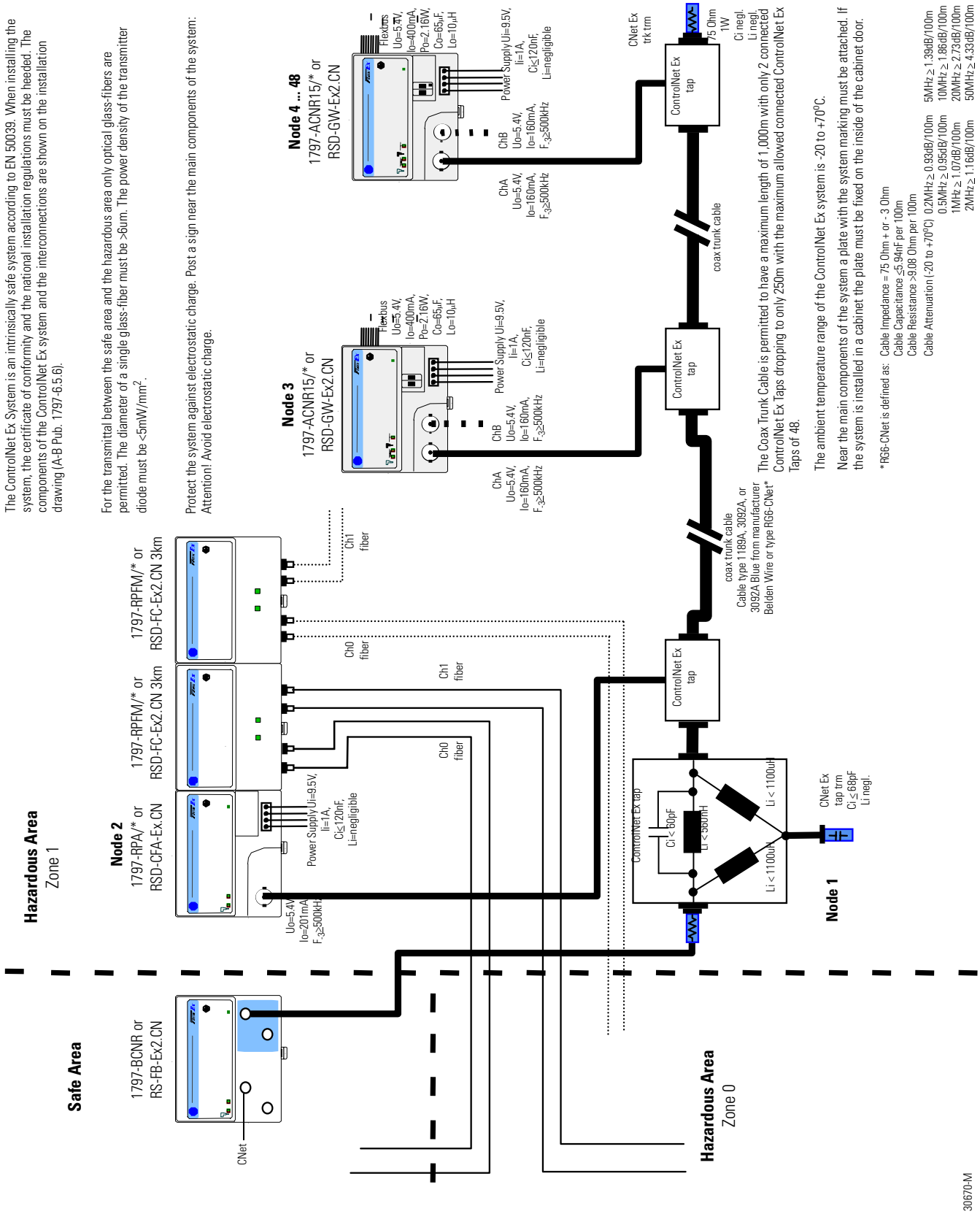

Describing the ControlNet Ex System Diagram

A maximum of 48 ControlNet Ex™ nodes may be connected together by 250m of coax cable and 48 taps. The distance increases to 1000m when you use only 2 taps. See the table below for more information.

The fiber media of the 1797-RPFM can be installed in a hazardous location (Zone 0, 1 or 2) to connect two 1797-RPFM modules or they can be installed through different locations into the non-hazardous location to connect the 1797-RPFM with any approved associated apparatus.

All cables and fiber media that are not light blue must be marked as IS using the 1797-EXMK marking kit or other locally approved IS identification and/or segregation method.

During the installation of the ControlNet Ex system, all metallic parts must be isolated to prevent an earth connection (high voltage withstanding of isolating material must be > 500V ac).

System Diagram Name	Catalog Number	Catalog Name	Description
1797-RPA	1797-RPA	ControlNet Ex Modular Repeater Adapter	Represents one ControlNet Ex node and must be connected to a coax trunk cable by 1797-TPx
1797-RPFM	1797-RPFM	ControlNet Ex Fiber Repeater Module, Medium Distance	Allows connection of a maximum of two devices per 1797-RPA and is powered directly by 1797-RPA
1797-ACNR15	1797-ACNR15	Redundant Media ControlNet Ex Adapter	Represents one ControlNet Ex node and must be connected to a coax trunk cable by 1797-TPx -each one with two redundant output channels that are connected to different ControlNet Ex networks (coax cables and 1797-TPx)
1797-BCNR	1797-BCNR	Redundant ControlNet Ex Barrier	Allows connection between ControlNet and ControlNet Ex networks
CNet Ex Tap Trm	1797-TCAP	ControlNet Ex Tap (Dummy) Terminator	Represents one ControlNet Ex node and is a simple capacitor (56pF) with a coax connector
ControlNet Ex Tap	1797-TPx	ControlNet Ex Coax Tap	Four types of connections available: S (straight t-tap), R (right angle t-tap), YS (straight y-tap), and YR (right angle y-tap) - a maximum of 48 taps can be connected together by coax trunk cable
CNet Ex Trk Trm	1797-XT	ControlNet Ex Trunk Terminator	Simple resistor (75Ω) with coax connector that must be on each end of the ControlNet Ex coax trunk for termination
Coax Trunk Cable	1786-RG6	Quad-Shield, RG-6 75Ω Coax Trunk Cable	Maximum (functional) length between 2 1797-TPx is 3280ft (1000m) - each 1797-TPx reduces the (functional) coax cable length by 53.4ft (16.3m)
None	None	Standard Coax Trunk Cable BNC Couplers	Different standard cable couplers, 90°, 180°, etc.

Certified Equivalent ControlNet Ex System Diagram Items

You may use these items as equivalents for the items shown on the system diagram.

System Diagram Name	Catalog Number	Source
1797-RPA	1797-RPA	Allen-Bradley
	RSD-CFA-Ex.CN	Pepperl+Fuchs
1797-RPFM	1797-RPFM	Allen-Bradley
	RSD-FC-Ex2.CN	Pepperl+Fuchs
1797-ACNR15	1797-ACNR15	Allen-Bradley
	RSD-GW-Ex2.CN	Pepperl+Fuchs
1797-BCNR	1797-BCNR	Allen-Bradley
	RS-FB-Ex2.CN	Pepperl+Fuchs
Coax Trunk Cable[1]	1786-RG6	Allen-Bradley
	3092A[2]	Belden Wire & Cable Co.
	3092A with blue jacket	Belden Wire & Cable Co.
ControlNet Ex Tap	1797-TPx	Allen-Bradley
	RS-TPx-Ex	Pepperl+Fuchs
CNet Ex Trk Trm	1797-XT	Allen-Bradley
	RS-XT-Ex	Pepperl+Fuchs
CNet Ex Tap Trm	1797-TCAP	Allen-Bradley
	RS-TCAP-Ex	Pepperl+Fuchs

1 In addition to these cable types, the following specification can be followed to allow additional types:
Cable Impedance = $75\Omega \pm 3\Omega$
Cable Capacitance = $\leq$5.94nF per 100m
Cable Resistance = $\geq$9.08Ω per 100m

Cable Attenuation	0.2MHz $\geq$ 0.93dB/100m	5MHz $\geq$ 1.39dB/100m
(-20 to +70°C)	0.5MHz $\geq$ 0.95dB/100m	10MHz $\geq$ 1.86dB/100m
	1MHz $\geq$ 1.07dB/100m	20MHz $\geq$ 2.73dB/100m
	2MHz $\geq$ 1.16dB/100m	50MHz $\geq$ 4.33dB/100m

2 Belden Wire & Cable 1189A may be used, but with functional loss of communication distance and/or nodes.

Installation in Zone 1

Modules must not be exposed to the environment. Provide a suitable metal enclosure. A label with this system marking must be attached near the main components of the system. If the system is installed in a cabinet, this label must be fixed inside the cabinet.

Allen-Bradley
1 Allen-Bradley Dr.
Mayfield Hts., OH USA

ControlNet Ex System

DMT 99 ATEX E 065 X
II (1) 2G SYST EEx ia/ib IIB/C T4

0102

-20°C <= Ambient Temperature <= +70°C

Attention!
Avoid electrostatic charging!

ATTENTION

Modules cannot be used in an intrinsically safe environment after they have been exposed to non-intrinsically safe signals.

Installation in Zone 22

When the ControlNet Ex system is installed in Zone 22, all system components (except the coax cable and ControlNet taps) must be installed in cabinets of the following type: IVK-ISRPI-V16LC; IVK-ISRPI-V8HYW; or IVK-ISRPI-V8LC. For more information on these cabinets, see page 1-4.

Electrostatic Charge

Protect the system against electrostatic charge. Post a sign near each module: **Attention! Avoid electrostatic charge.** For your convenience, a sign which can be cut out and posted is included in this chapter.

Repair

Modules are not field-repairable. Any attempt to open a module will void the warranty and the IS certification. If repair is necessary, return the module to the manufacturer.

Attention: Avoid electrostatic charge.

ATTENTION

When installing, commissioning, operating, and maintaining devices with intrinsically safe circuits, the certificate of conformity of the devices, as well as the applicable national and local construction, installation, and operating regulations must be heeded (in Germany DIN EN 50020, DIN VDE 0165).

ATTENTION

Repairs to devices having intrinsically safe circuitry may only be carried out by qualified personnel in accordance with the valid regulations (Elex V).

General Specifications

Operational Temperature	-20 to 70°C (-4 to 158°F)
Agency Certification	II (1) 2G SYST EEx ia/ib IIB/IIC T4
Certificates	DMT 99 ATEX E 065 X

1797-TB3 FLEX Ex Terminal Base Unit

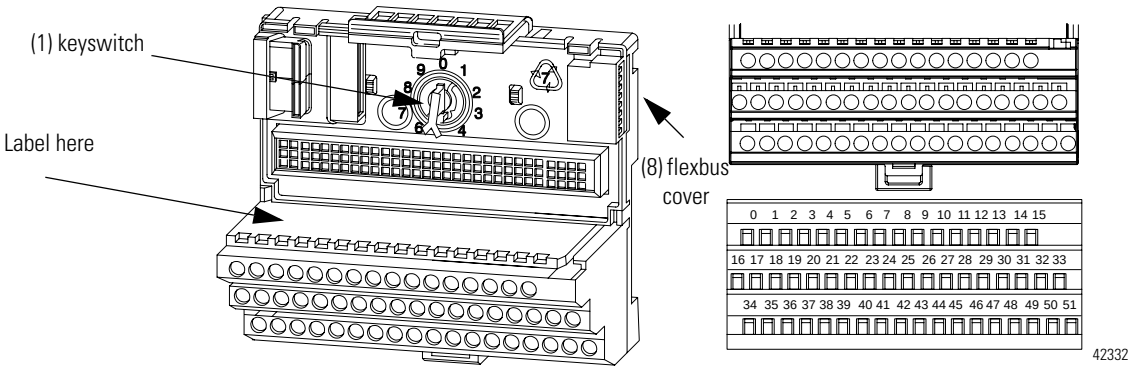

General Information

FLEX Ex I/O modules must be used with a 1797-TB3 or -TB3S intrinsically safe terminal base unit.

Module Installation

You will need to rotate the keyswitch (1) to the correct position depending on the module. Refer to the module's installation instructions for more information. **Do not change the position of the keyswitch after wiring the terminal base unit.**

Make certain that you only connect terminal base units to other intrinsically safe system modules or adapters to maintain the integrity of the intrinsically-safe backplane.

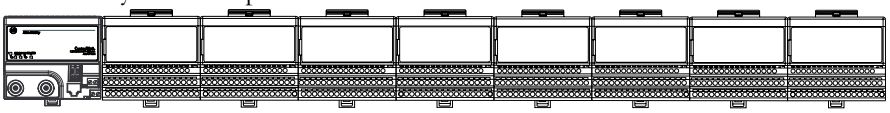

Do not remove the flexbus cover (8) on the right-most terminal base unit.

Inputs

Do not apply any non-intrinsically safe signals to the terminal base.

When using as an intrinsically safe electrical apparatus according to EN50020, the European directives and regulations must be followed.

The terminals in the terminal base unit may be electrically connected to each other by the insertion of FLEX Ex I/O modules. See the module installation instructions to determine this.

IMPORTANT When interconnecting several lines, you must consider the total accumulated power and check for intrinsic safety requirements.

Description

The 1797-TB3 terminal base has 36 wiring connections to/from a plug-in module. The use of each terminal depends on the module mounted in this base.

The 1797-TB3 terminal base also has connections for cold junction compensation and terminals designated for shield termination to chassis ground.

The terminal base is equipped with a factory-installed tab cover for the backplane bus connection. The tab cover may be removed only when the terminal base unit is connected to other terminal base units..

Wiring Connections for Terminal Base 1797-TB3

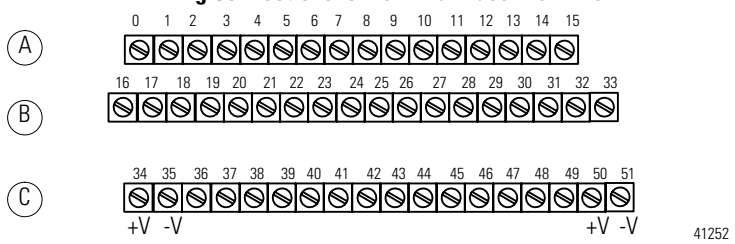

No connections allowed to terminals 36 and 49

ATTENTION

- Make certain that you power the terminal base unit with an intrinsically safe power supply. Do not exceed the values listed in the specifications for the terminal base unit.
- Do not use the unused terminals on the terminal base unit. Using these terminals as supporting terminals can result in damage to modules and/or unintended operation of your system.

Intrinsically Safe Specifications

For a full list of specifications, refer to the FLEX Ex Terminal Base Installation Instructions, publication 1797-5.1.

Terminals Assignments +34, -35, +50, -51, and 96 pin female I/O connector pins 30-32, 62-64, 94-96 36, 49 All Other Terminals	Only for intrinsically safe circuits U_i ≤10V dc I_i ≤2.5A C_i ≤ 1nF L_i Negligible Must not be used for any connection U_i ≤30V dc I_i ≤100mA C_i ≤1nF L_i Negligible
Flexbus Connection Intrinsically Safe	U_i ≤10V dc I_i ≤400mA C_i ≤1nF L_i Negligible
Operational Temperature	-20 to 70°C (-4 to 158°F)
Agency Certification	II 2G EEx ia IIC T4
Certificates	DMT 98 ATEX E012 U Ex CE

Notes:

1797-TB3S FLEX Ex Terminal Base Unit

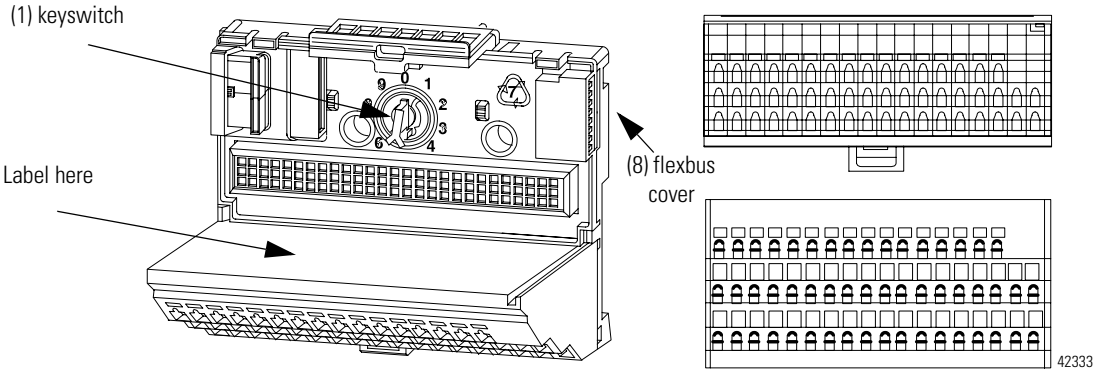

General Information

FLEX Ex I/O modules must be used with a 1797-TB3 or -TB3S intrinsically safe terminal base unit.

Module Installation

You will need to rotate the keyswitch (1) to the correct position depending on the module. Refer to the module's installation instructions for more information. **Do not change the position of the keyswitch after wiring the terminal base unit.**

Make certain that you only connect terminal base units to other intrinsically safe system modules or adapters to maintain the integrity of the intrinsically-safe backplane.

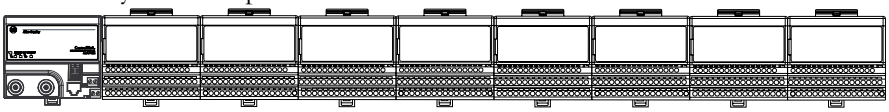

Do not remove the flexbus cover (8) on the right-most terminal base unit.

Inputs

Do not apply any non-instrinsically safe signals to the terminal base.

When using as an intrinsically safe electrical apparatus according to EN50020, the European directives and regulations must be followed.

The terminals in the terminal base unit may be electrically connected to each other by the insertion of FLEX Ex I/O modules. See the module installation instructions to determine this.

IMPORTANT When interconnecting several lines, you must consider the total accumulated power and check for intrinsic safety requirements.

Description

The 1797-TB3S terminal base has 36 wiring connections to/from a plug-in module. The use of each terminal depends on the module mounted in this base.

The 1797-TB3S terminal base also has connections for cold junction compensation and terminals designated for shield termination to chassis ground.

The terminal base is equipped with a factory-installed tab cover for the backplane bus connection. The tab cover may be removed only when the terminal base unit is connected to other terminal base units.

Wiring Connections for Terminal Base 1797-TB3S

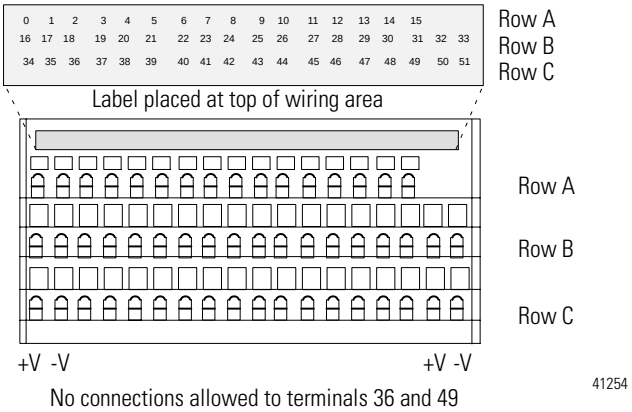

ATTENTION

- Make certain that you power the terminal base unit with an intrinsically safe power supply. Do not exceed the values listed in the specifications for the terminal base unit.
- Do not use the unused terminals on the terminal base unit. Using these terminals as supporting terminals can result in damage to modules and/or unintended operation of your system.

Intrinsically Safe Specifications

For a full list of specifications, refer to the FLEX Ex Spring Clamp Terminal Base Installation Instructions, publication 1797-5.2.

Terminals Assignments +34, -35, +50, -51, and 96 pin female I/O connector pins 30-32, 62-64, 94-96 36, 49 All Other Terminals	Only for intrinsically safe circuits U_i ≤10V dc I_i ≤2.5A C_i ≤ 1nF L_i Negligible Must not be used for any connection U_i ≤30V dc I_i ≤100mA C_i ≤1nF L_i Negligible
Flexbus Connection Intrinsically Safe	U_i ≤10V dc I_i ≤400mA C_i ≤1nF L_i Negligible
Operational Temperature	-20 to 70°C (-4 to 158°F)
Agency Certification	II 2G EEx ia IIC T4
Certificates	DMT 98 ATEX E012 U Ex CE

Notes:

1797-IBN16 FLEX Ex 16 NAMUR Input Module

General Information

Modules must be used with a 1797-TB3 or -TB3S intrinsically safe terminal base unit.

Module Installation

Rotate keyswitch on terminal base unit clockwise to position 6 as required for this type of module. **Do not change the position of the keyswitch after wiring the terminal base unit.**

Inputs

Each input can be operated from a NAMUR sensor or a mechanical contact (if mechanical inputs are used). **Do not apply any non-intrinsically safe signals to this module.**

When using an intrinsically safe electrical apparatus according to EN50020, the European directives and regulations must be followed.

The channels in this module are electrically connected to each other and have a common plus-line.

IMPORTANT When interconnecting several lines, you must consider the total accumulated power and check for intrinsic safety.

Wiring to a 1797-TB3 or -TB3S Terminal Base Unit

Connect wiring to the terminal base as shown below.

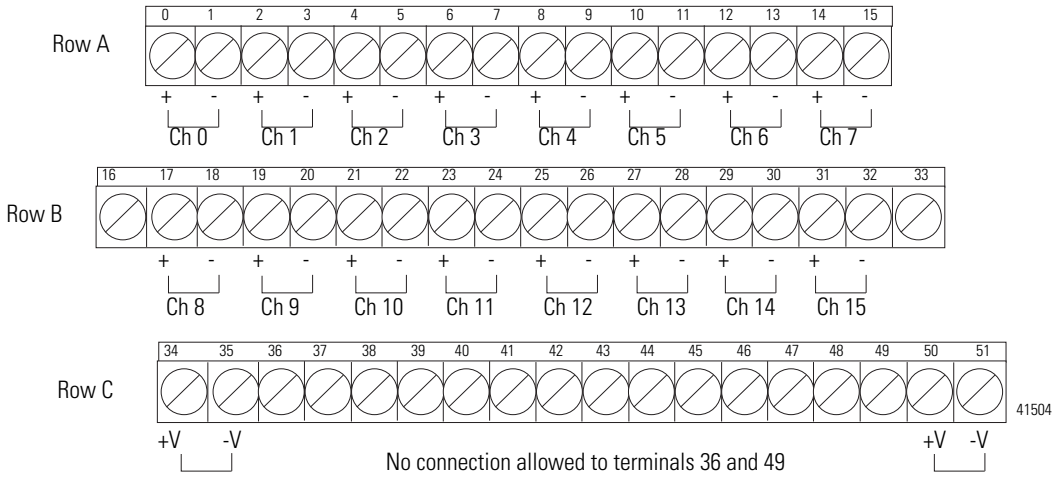

ATTENTION

Do not use any unused terminals on this terminal base unit. Using these terminals as supporting terminals can result in damage to the module and/or unintended operation of your system.

Intrinsically Safe Specifications

For a full list of specifications, refer to FLEX Ex 16 NAMUR Input Module Installation Instructions, publication 1797-5.7.

Output (intrinsically safe) (16 position male/female flexbus connector)	$U_i \leq 5.8V$ $I_i \leq 400mA$ Li = Negligible Ci = Negligible
Power Supply (+V, -V Intrinsically Safe)	$U_i \leq 9.5V$ dc $I_i \leq 1A$ L_i = Negligible C_i = Negligible
Operating Temperature	-20 to +70°C (-4 to +158°F)
Agency Certification	II (1) 2G EEx ia/ib IIB/IIC T4 II (1D) (2D)
Certificates	DMT 98 ATEX E 013 X Ex CE

CE/CENELEC I/O Entity Parameters (Each Channel)

	Protection	Group	Allowed Capacitance	Allowed Inductance	L_0/R_0 Ratio
$U_0 \leq 14.5V$ $I_0 \leq 15mA$ $P_0 < 40mW$ Characteristic: linear	EEx ia	IIB	1μF	10mH	2.6mH/Ω
	EEx ia	IIC	300nF	2mH	0.65mH/Ω

Notes:

1797-OB4D FLEX Ex 24V dc Non-Isolated Source 4 Output Module

General Information

Modules must be used with a 1797-TB3 or -TB3S intrinsically safe terminal base unit.

Module Installation

Rotate keyswitch on terminal base unit clockwise to position 7 as required for this type of module. **Do not change the position of the keyswitch after wiring the terminal base unit.**

Outputs

Each output can operate a discrete field device. **Do not apply any non-intrinsically safe signals to this module.**

When using an intrinsically safe electrical apparatus according to EN50020, the European directives and regulations must be followed.

The channels in this module are electrically connected to each other.

Wiring to a 1797-TB3 or -TB3S Terminal Base Unit

Connect wiring to the terminal base as shown below.

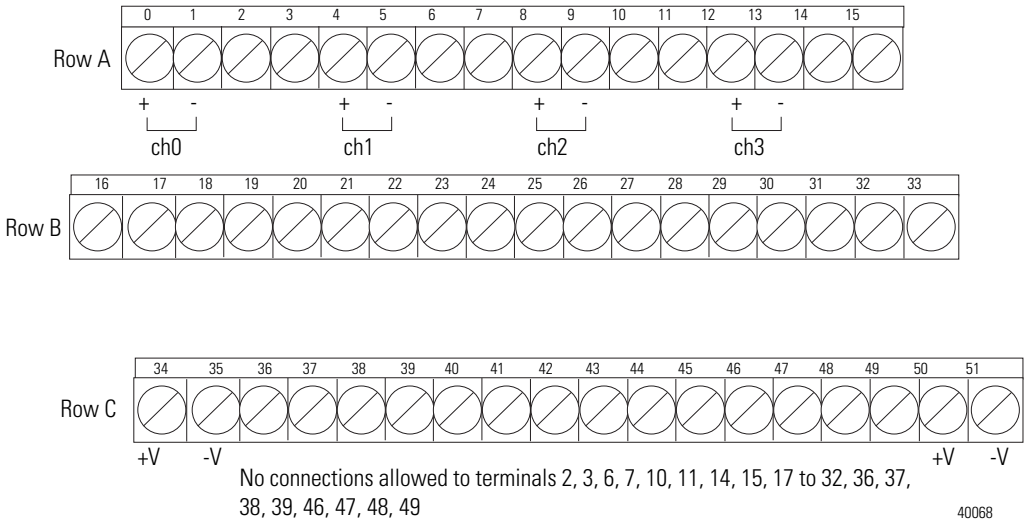

ATTENTION

Do not use any unused terminals on this terminal base unit. Using these terminals as supporting terminals can result in damage to the module and/or unintended operation of your system.

Intrinsically Safe Specifications

For a full list of specifications, refer to FLEX Ex 24V dc Non-Isolated Source 4 Output Module Installation Instructions, publication 1797-5.6.

Output (intrinsically safe) (16 position male/female flexbus connector)	$U_i \leq 5.8V$ $I_i \leq 400mA$ Li = Negligible Ci = 1.35µF
Power Supply (+V, -V Intrinsically Safe)	$U_i \leq 9.5V$ dc $I_i \leq 1A$ L_i = Negligible $C_i \leq$ Negligible
Operating Temperature	-20 to +70°C (-4 to +158°F)
Agency Certification	II (1) 2G EEx ia/ib IIB/IIC T4 II (1D) (2D)
Certificates	DMT 98 ATEX E 040 X Ex CE

CE/CENELEC I/O Entity Parameters

Signal output (+ to -) for ch 0 to ch 3 (terminals: 0-1; 4-5; 8-9; 12-13)

	Protection	Group	Allowed Capacitance	Allowed Inductance
1797-OB4D U_0 = 27.4V I_0 = 110mA	EEx ia	IIB	677nF	8mH
		IIC	87nF	2mH
If concentrated capacitance and/or inductance are available, use the following values.	EEx ia	IIB	150nF	5mH
		IIC	30nF	2mH

1797-IE8 FLEX Ex 8 Input Analog Module

General Information

Modules must be used with a 1797-TB3 or -TB3S intrinsically safe terminal base unit.

Module Installation

Rotate keyswitch on terminal base unit clockwise to position 3 as required for this type of module. **Do not change the position of the keyswitch after wiring the terminal base unit.**

Inputs

Each input can be operated from an analog field device signal. **Do not apply any non-intrinsically safe signals to this module.**

When using an intrinsically safe electrical apparatus according to EN50020, the European directives and regulations must be followed.

The channels in this module are electrically connected to each other and have a common plus-line.

IMPORTANT When interconnecting several lines, you must consider the total accumulated power and check for intrinsic safety.

Wiring to a 1797-TB3 or -TB3S Terminal Base Unit

Connect wiring to the terminal base as shown below.

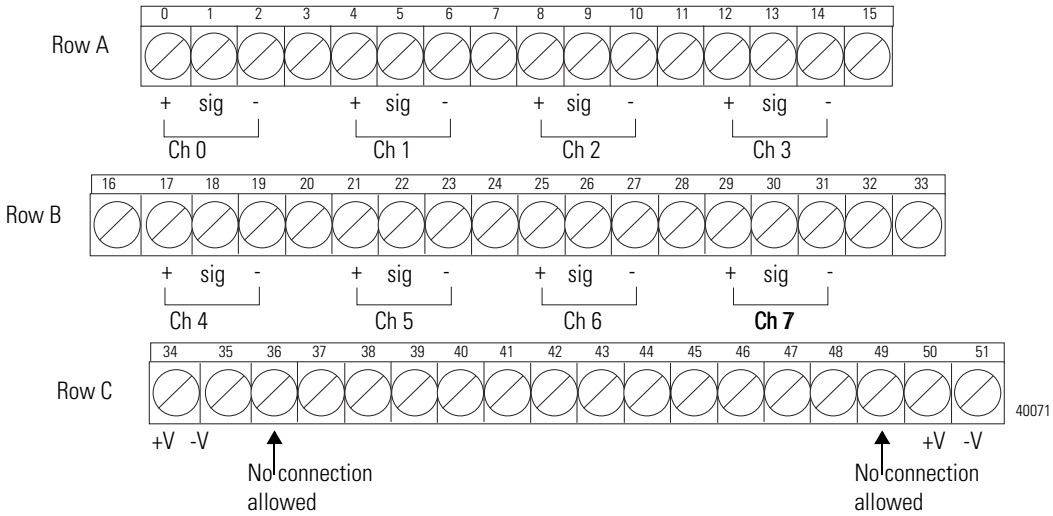

ATTENTION

Do not use any unused terminals on this terminal base unit. Using these terminals as supporting terminals can result in damage to the module and/or unintended operation of your system.

Intrinsically Safe Specifications

For a full list of specifications, refer to FLEX Ex 8 Input Analog Module Installation Instructions, publication 1797-5.5.

Output (intrinsically safe) (16 position male/female flexbus connector)	$U_i \leq 5.8V$ $I_i \leq 400mA$ L_i = Negligible $C_i \leq 1.35\mu F$
Power Supply (+V, -V Intrinsically Safe)	$U_i \leq 9.5V$ dc $I_i \leq 1A$ L_i = Negligible C_i = Negligible
Operating Temperature	-20 to +70°C (-4 to +158°F)
Agency Certification	II (1) 2G EEx ia/ib IIB/IIC T4 II (1D) (2D)
Certificates	DMT 98 ATEX E 020 X Ex CE

CE/CENELEC I/O Entity Parameters

Measurement input (sig to -) for ch 0 to ch 7 (terminals: 1-2; 5-6; 9-10; 13-14; 18-19; 22-23; 26-27; 30-31)

	Protection	Group	Allowed Capacitance	Allowed Inductance
U_0 = 5V I_0 = 1mA P_0 = 1.3mW U_i = 28V I_i = 93mA C_i and L_i negligible	EEx ia	IIB	1000µF	1H
		IIC	100µF	1H

Source output (+ to sig) for ch 0 to ch 7 (terminals: 0-1; 4-5; 8-9; 12-13; 17-18; 21-22; 25-26; 29-30)

	Protection	Group	Allowed Capacitance	Allowed Inductance
U_0 = 23.7V I_0 = 92.5mA P_0 = 548mW	EEx ia	IIB	560nF	10mH
		IIC	66nF	2.5mH
If concentrated capacitance and/or inductance are available, use the following values.	EEx ia	IIB	320nF	10mH
		IIC	60nF	2mH

Source output plus measurement input (+ to -) for ch 0 to ch 7 (terminals: 0-2; 4-6; 8-10; 12-14; 17-19; 21-23; 25-27; 29-31)

	Protection	Group	Allowed Capacitance	Allowed Inductance
U_0 = 23.7V I_0 = 93.5mA P_0 = 555mW	EEx ia	IIB	560nF	10mH
		IIC	66nF	2.5mH
If concentrated capacitance and/or inductance are available, use the following values.	EEx ia	IIB	320nF	10mH
		IIC	60nF	2mH

Notes:

1797-IE8H FLEX Ex 8 Input HART Analog Module

General Information

Modules must be used with a 1797-TB3 or -TB3S intrinsically safe terminal base unit.

Module Installation

Rotate keyswitch on terminal base unit clockwise to position 3 as required for this type of module. **Do not change the position of the keyswitch after wiring the terminal base unit.**

Inputs

Each input can be operated from an analog field device signal. **Do not apply any non-intrinsically safe signals to this module.**

When using an intrinsically safe electrical apparatus according to EN50020, the European directives and regulations must be followed.

The channels in this module are electrically connected to each other and have a common plus-line.

IMPORTANT When interconnecting several lines, you must consider the total accumulated power and check for intrinsic safety.

Wiring to a 1797-TB3 or -TB3S Terminal Base Unit

Connect wiring to the terminal base as shown below.

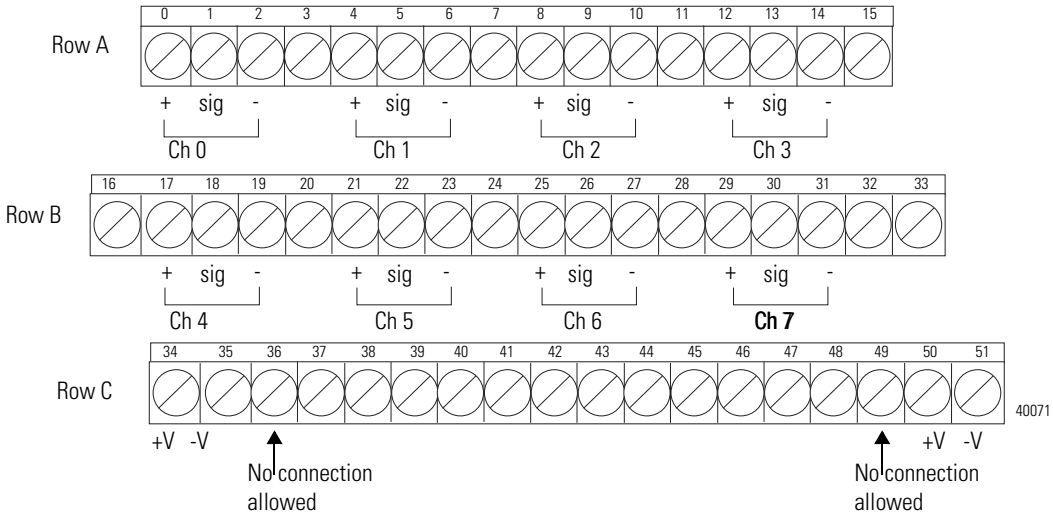

ATTENTION

Do not use any unused terminals on this terminal base unit. Using these terminals as supporting terminals can result in damage to the module and/or unintended operation of your system.

Intrinsically Safe Specifications

For a full list of specifications, refer to FLEX Ex Analog Input Modules Installation Instructions, publication 1797-5.5.

Output (intrinsically safe) (16 position male/female flexbus connector)	$U_i \leq 5.8V$ $I_i \leq 400mA$ L_i = Negligible $C_i \leq 1.35\mu F$
Power Supply (+V, -V Intrinsically Safe)	$U_i \leq 9.5V$ dc $I_i \leq 1A$ L_i = Negligible C_i = Negligible
Operating Temperature	-20 to +70°C (-4 to +158°F)
Agency Certification	II (1) 2G EEx ia/ib IIB/IIC T4 II (1D) (2D)
Certificates	DMT 98 ATEX E 020 X Ex CE

CE/CENELEC I/O Entity Parameters

Measurement input (sig to -) for ch 0 to ch 7 (terminals: 1-2; 5-6; 9-10; 13-14; 18-19; 22-23; 26-27; 30-31)

	Protection	Group	Allowed Capacitance	Allowed Inductance
U_0 = 5V I_0 = 1mA P_0 = 1.3mW U_i = 28V I_i = 93mA C_i and L_i negligible	EEx ia	IIB	1000µF	1H
		IIC	100µF	1H

Source output (+ to sig) for ch 0 to ch 7 (terminals: 0-1; 4-5; 8-9; 12-13; 17-18; 21-22; 25-26; 29-30)

	Protection	Group	Allowed Capacitance	Allowed Inductance
U_0 = 23.7V I_0 = 92.5mA P_0 = 548mW	EEx ia	IIB	560nF	10mH
		IIC	66nF	2.5mH
If concentrated capacitance and/or inductance are available, use the following values.	EEx ia	IIB	320nF	10mH
		IIC	60nF	2mH

Source output plus measurement input (+ to -) for ch 0 to ch 7 (terminals: 0-2; 4-6; 8-10; 12-14; 17-19; 21-23; 25-27; 29-31)

	Protection	Group	Allowed Capacitance	Allowed Inductance
U_0 = 23.7V I_0 = 93.5mA P_0 = 555mW	EEx ia	IIB	560nF	10mH
		IIC	66nF	2.5mH
If concentrated capacitance and/or inductance are available, use the following values.	EEx ia	IIB	320nF	10mH
		IIC	60nF	2mH

Notes:

1797-IE8NF FLEX Ex 8 Input Analog Module with Noise Filter

General Information

Modules must be used with a 1797-TB3 or -TB3S intrinsically safe terminal base unit.

Module Installation

Rotate keyswitch on terminal base unit clockwise to position 3 as required for this type of module. **Do not change the position of the keyswitch after wiring the terminal base unit.**

Inputs

Each input can be operated from an analog field device signal. **Do not apply any non-intrinsically safe signals to this module.**

When using an intrinsically safe electrical apparatus according to EN50020, the European directives and regulations must be followed.

The channels in this module are electrically connected to each other and have a common plus-line.

IMPORTANT When interconnecting several lines, you must consider the total accumulated power and check for intrinsic safety.

Wiring to a 1797-TB3 or -TB3S Terminal Base Unit

Connect wiring to the terminal base as shown below.

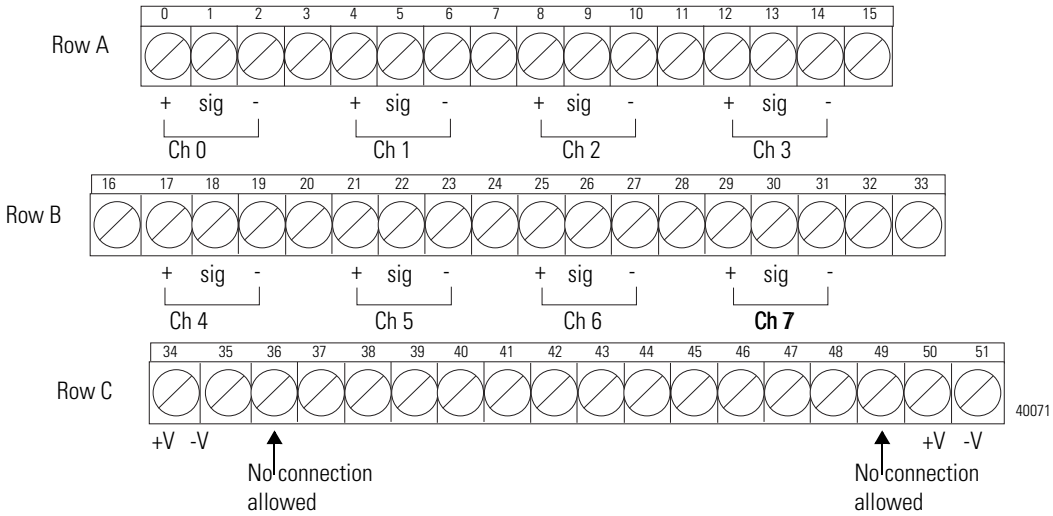

ATTENTION

Do not use any unused terminals on this terminal base unit. Using these terminals as supporting terminals can result in damage to the module and/or unintended operation of your system.

Intrinsically Safe Specifications

For a full list of specifications, refer to FLEX Ex Analog Input Modules Installation Instructions, publication 1797-5.5.

Output (intrinsically safe) (16 position male/female flexbus connector)	$U_i \leq 5.8V$ $I_i \leq 400mA$ L_i = Negligible $C_i \leq 1.35\mu F$
Power Supply (+V, -V Intrinsically Safe)	$U_i \leq 9.5V$ dc $I_i \leq 1A$ L_i = Negligible C_i = Negligible
Operating Temperature	-20 to +70°C (-4 to +158°F)
Agency Certification	II (1) 2G EEx ia/ib IIB/IIC T4 II (1D) (2D)
Certificates	DMT 98 ATEX E 020 X Ex CE

CE/CENELEC I/O Entity Parameters

Measurement input (sig to -) for ch 0 to ch 7 (terminals: 1-2; 5-6; 9-10; 13-14; 18-19; 22-23; 26-27; 30-31)

	Protection	Group	Allowed Capacitance	Allowed Inductance
U_0 = 5V I_0 = 1mA P_0 = 1.3mW U_i = 28V I_i = 93mA C_i and L_i negligible	EEx ia	IIB	1000µF	1H
		IIC	100µF	1H

Source output (+ to sig) for ch 0 to ch 7 (terminals: 0-1; 4-5; 8-9; 12-13; 17-18; 21-22; 25-26; 29-30)

	Protection	Group	Allowed Capacitance	Allowed Inductance
U_0 = 23.7V I_0 = 92.5mA P_0 = 548mW	EEx ia	IIB	560nF	10mH
		IIC	66nF	2.5mH
If concentrated capacitance and/or inductance are available, use the following values.	EEx ia	IIB	320nF	10mH
		IIC	60nF	2mH

Source output plus measurement input (+ to -) for ch 0 to ch 7 (terminals: 0-2; 4-6; 8-10; 12-14; 17-19; 21-23; 25-27; 29-31)

	Protection	Group	Allowed Capacitance	Allowed Inductance
U_0 = 23.7V I_0 = 93.5mA P_0 = 555mW	EEx ia	IIB	560nF	10mH
		IIC	66nF	2.5mH
If concentrated capacitance and/or inductance are available, use the following values.	EEx ia	IIB	320nF	10mH
		IIC	60nF	2mH

Notes:

1797-OE8 FLEX Ex 8 Output Analog Module

General Information

Modules must be used with a 1797-TB3 or -TB3S intrinsically safe terminal base unit.

Module Installation

Rotate keyswitch on terminal base unit clockwise to position 4 as required for this type of module. **Do not change the position of the keyswitch after wiring the terminal base unit.**

Outputs

Each output channel can operate an analog field device. **Do not apply any non-intrinsically safe signals to this module.**

When using an intrinsically safe electrical apparatus according to EN50020, the European Community directives and regulations must be followed.

The channels in this module are electrically connected to each other.

Wiring to a 1797-TB3 or -TB3S Terminal Base Unit

Connect wiring to the terminal base as shown below.

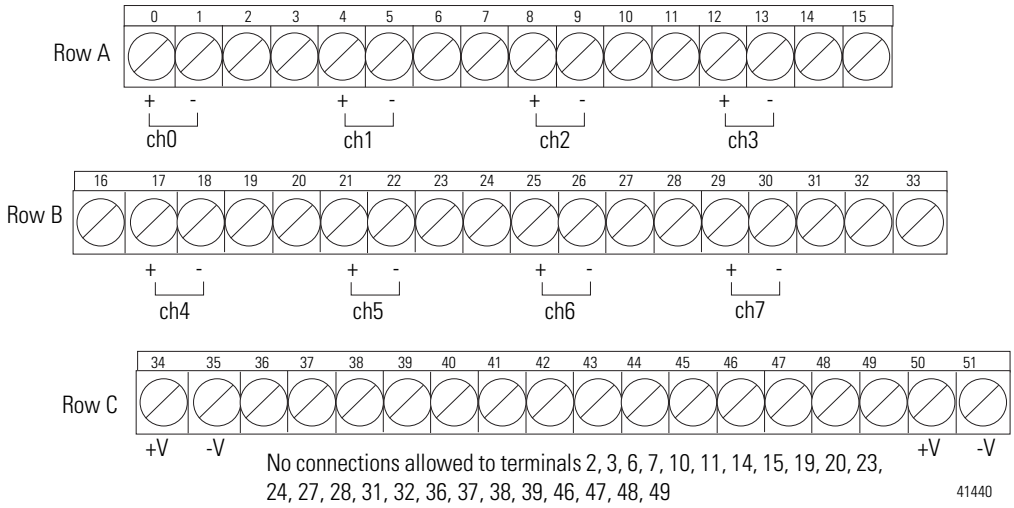

ATTENTION

Do not use any unused terminals on this terminal base unit. Using these terminals as supporting terminals can result in damage to the module and/or unintended operation of your system.

General Specifications

For a full list of specifications, refer to FLEX Ex 8 Analog Output Modules Installation Instructions, publication 1797-5.3.

Output (Intrinsically Safe) (16 pin male and female flexbus connector)	$U_i \leq 5.8V$ dc $I_i \leq 400mA$ L_i = Negligible $C_i \leq 1.35\mu F$
Power Supply (+V, -V Intrinsically Safe)	$U_i \leq 9.5V$ dc $I_i \leq 1A$ L_i = Negligible C_i = Negligible
Operational Temperature	-20 to +70°C (-4 to +158°F)
Agency Certification	II (1) 2G EEx ia/ib IIB/IIC T4 II (1D) (2D)
Certificates	DMT 00 ATEX E 042 X Ex CE

CE, CENELEC I/O Entity Parameters

Signal output (+ to -) for ch 0 to ch 7 (terminals: 0-1; 4-5; 8-9; 12-13; 17-18; 21-22; 25-26; 29-30)

	Protection	Group	Allowed Capacitance	Allowed Inductance
U_0 = 21V I_0 = 100mA P_0 = 520mW	EEx ia	IIB	1.27µF	8mH
		IIC	188nF	2mH
If concentrated capacitance and/or inductance are available, use the following values.	EEx ia	IIB	295nF	10mH
		IIC	70nF	2mH

1797-OE8H FLEX Ex 8 Output HART Analog Module

General Information

Modules must be used with a 1797-TB3 or -TB3S intrinsically safe terminal base unit.

Module Installation

Rotate keyswitch on terminal base unit clockwise to position 4 as required for this type of module. **Do not change the position of the keyswitch after wiring the terminal base unit.**

Outputs

Each output channel can operate an analog field device. **Do not apply any non-intrinsically safe signals to this module.**

When using an intrinsically safe electrical apparatus according to EN50020, the European Community directives and regulations must be followed.

The channels in this module are electrically connected to each other.

Wiring to a 1797-TB3 or -TB3S Terminal Base Unit

Connect wiring to the terminal base as shown below.

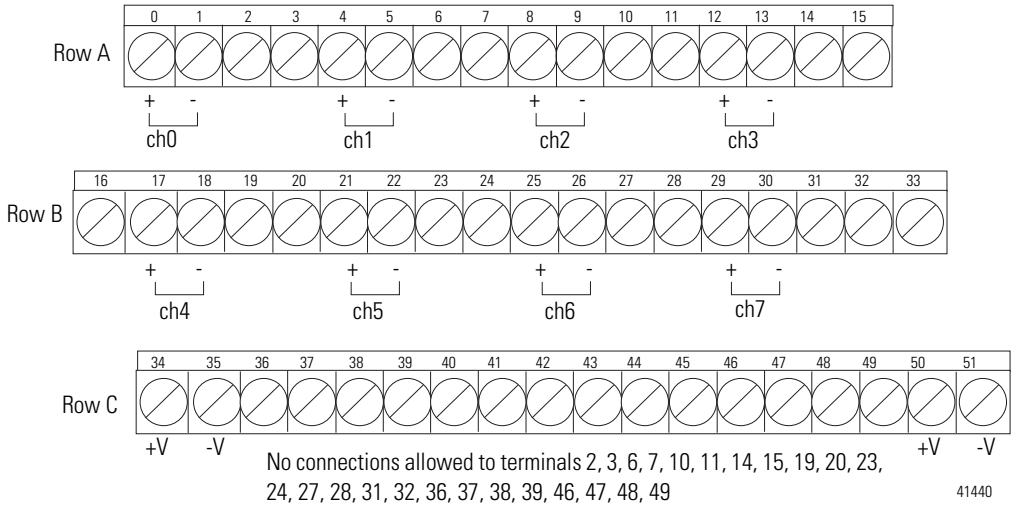

ATTENTION

Do not use any unused terminals on this terminal base unit. Using these terminals as supporting terminals can result in damage to the module and/or unintended operation of your system.

General Specifications

For a full list of specifications, refer to FLEX Ex 8 Analog Output Modules Installation Instructions, publication 1797-5.3.

Output (Intrinsically Safe) (16 pin male and female flexbus connector)	$U_i \leq 5.8V$ dc $I_i \leq 400mA$ L_i = Negligible $C_i \leq 1.35\mu F$
Power Supply (+V, -V Intrinsically Safe)	$U_i \leq 9.5V$ dc $I_i \leq 1A$ L_i = Negligible C_i = Negligible
Operational Temperature	-20 to +70°C (-4 to +158°F)
Agency Certification	II (1) 2G EEx ia/ib IIB/IIC T4 II (1D) (2D)
Certificates	DMT 00 ATEX E 042 X Ex CE

CE, CENELEC I/O Entity Parameters

Signal output (+ to -) for ch 0 to ch 7 (terminals: 0-1; 4-5; 8-9; 12-13; 17-18; 21-22; 25-26; 29-30)

	Protection	Group	Allowed Capacitance	Allowed Inductance
U_0 = 21V I_0 = 100mA P_0 = 520mW	EEx ia	IIB	1.27µF	8mH
		IIC	188nF	2mH
If concentrated capacitance and/or inductance are available, use the following values.	EEx ia	IIB	295nF	10mH
		IIC	70nF	2mH

1797-IRT8 FLEX Ex Thermocouple/RTD Input Module

General Information

Modules must be used with a 1797-TB3 or -TB3S intrinsically safe terminal base unit.

Module Installation

Rotate keyswitch on terminal base unit clockwise to position 2 as required for this type of module. **Do not change the position of the keyswitch after wiring the terminal base unit.**

Inputs

Each input can be operated from a thermocouple (TC) or resistance temperature detector (RTD). **Do not apply any non-intrinsically safe signals to this module.**

When using an intrinsically safe electrical apparatus according to EN50020, the European directives and regulations must be followed.

The channels in this module are electrically connected to each other and have a common plus-line.

IMPORTANT When interconnecting several lines, you must consider the total accumulated power and check for intrinsic safety.

Wiring to a 1797-TB3 or -TB3S Terminal Base Unit

Connect wiring to the terminal base as shown below.

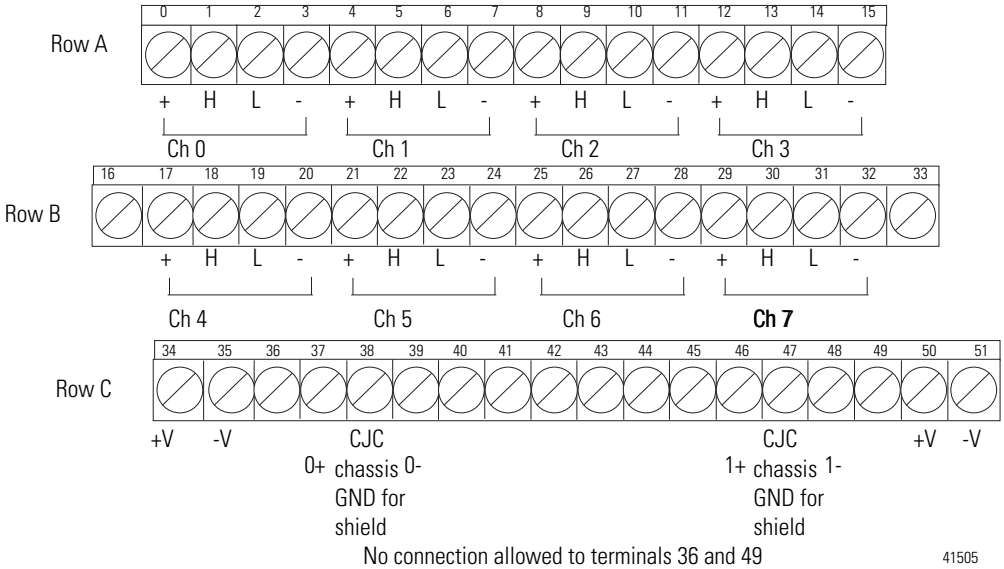

ATTENTION

Do not use any unused terminals on this terminal base unit. Using these terminals as supporting terminals can result in damage to the module and/or unintended operation of your system.

Intrinsically Safe Specifications

For a full list of specifications, refer to FLEX Ex Thermocouple/RTD Input Module Installation Instructions, publication 1797-5.4.

Output (intrinsically safe) (16 position male/female flexbus connector)	$U_i \leq 5.8V$ $I_i \leq 400mA$ Li = Negligible Ci $\leq 1.35\mu F$
Power Supply (+V, -V Intrinsically Safe)	$U_i \leq 9.5V$ dc $I_i \leq 1A$ L_i = Negligible C_i = Negligible
Operational Temperature	-20 to +70°C (-4 to 158°F)
Agency Certification	II (1) 2G EEx ia/ib IIB/IIC T4 II (1D) (2D)
Certificates	DMT 98 ATEX E 023X Ex CE

CE/CENELEC I/O Entity Parameters

Input circuits (+ to -) for ch0 to ch7 (terminals: 0-3; 4-7; 8-11; 12-15; 17-20; 21-24; 25-28; 29-32)

	Protection	Group	Allowed Capacitance	Allowed Inductance	L_0/R_0 Ratio
U_0 = 9V I_0 = 37mA P_0 = 83mW	EEx ia	IIB	40µF	80mH	1.7mH/Ω
	EEx ia	IIC	4.9µF	20mH	0.4mH/Ω

CJC circuits (+ to -) for CJC0 and CJC1 (terminals: 37, 39; 46, 48)

	Protection	Group	Allowed Capacitance	Allowed Inductance	L_0/R_0 Ratio
U_0 = 9V I_0 = 1mA P_0 = 3mW	EEx ia	IIB	40µF	1H	63mH/Ω
	EEx ia	IIC	4.9µF	1H	15mH/Ω

Input circuits (+ to -) for ch0 to ch7 and CJC circuits (+ to -) for CJC0 and CJC1 (terminals 0-3, 37, 39; 4-7, 37, 39; 8-11, 37, 39; 12-15, 37, 39; 17-20, 37, 39; 21-24, 37, 39; 25-28, 37, 39; 29-32, 37, 39; 0-3, 46, 48; 4-7, 46, 48; 8-11, 46, 48; 12-15, 46, 48; 17-20, 46, 48; 21-14, 46, 48; 25-28, 46, 48; 29-32, 46, 48)

	Protection	Group	Allowed Capacitance	Allowed Inductance	L_0/R_0 Ratio
U_0 = 9V I_0 = 38mA P_0 = 86mW	EEx ia	IIB	40µF	80mH	1.7mH/Ω
	EEx ia	IIC	4.9µF	20mH	0.4mH/Ω

Notes:

1797-IJ2 FLEX Ex Frequency Input Module

General Information

Modules must be used with a 1797-TB3 or -TB3S intrinsically safe terminal base unit.

Module Installation

Rotate keyswitch on terminal base unit clockwise to position 1 as required for this type of module. **Do not change the position of the keyswitch after wiring the terminal base unit.**

Inputs

The frequency input module has 2 input channels. Each input can accept inputs from magnetic pickups or proximity probes. Each input channel has 2 input selections: frequency input or gate input. **Do not apply any non-intrinsically safe signals to this module.**

The channels in this module are electrically connected to each other.

When using an intrinsically safe electrical apparatus according to EN50020, the European directives and regulations must be followed.

IMPORTANT When interconnecting several lines, you must consider the total accumulated power and check for intrinsic safety.

Wiring to a 1797-TB3 or -TB3S Terminal Base Unit

Connect wiring to the terminal base as shown below.

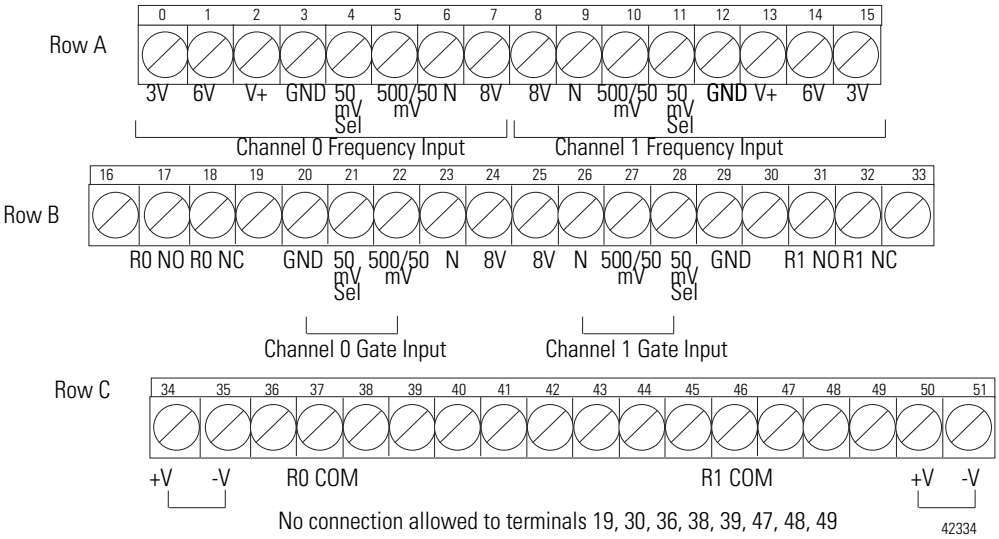

ATTENTION

Do not use any unused terminals on this terminal base unit. Using these terminals as supporting terminals can result in damage to the module and/or unintended operation of your system.

Intrinsically Safe Specifications

For a full list of specifications, refer to FLEX Ex Frequency Input Module Installation Instructions, publication 1797-5.7.

Output (intrinsically safe) (16 position male/female flexbus connector)	$U_o \leq 5.8V$ $I_o \leq 400mA$ Li = Negligible Ci $\leq 2.64\mu F$
Power Supply (+V, -V Intrinsically Safe)	$U_i \leq 9.5V$ dc $I_i \leq 1A$ L_i = Negligible C_i = Negligible
Operating Temperature	-20 to +70°C (-4 to +158°F)
Agency Certification	II (1) 2G EEx ia/ib IIB/IIC T4 II (1D) (2D)
Certificates	DMT 98 ATEX E 033 X Ex CE

CE/CENELEC Input I/O Entity Parameters

Channel 0 Frequency Input

Field devices may only be connected to the terminals of one of the five following circuits. The terminals of the remaining four circuits must not be connected.

Namur/Contact (terminals 6-7)	Protection	Group	Allowed Capacitance	Allowed Inductance	L_oR_o Ratio
U_o = 14.7V I_o = 15mA P_o = 30mW	EEx ia	IIB	3.86µF	300mH	2.6mH/Ω
		IIC	620nF	80mH	0.65mH/Ω

Magnetic 500mV (terminals 5-3)	Protection	Group	Allowed Capacitance	Allowed Inductance	L_oR_o Ratio
U_o = 14.7V I_o = 10mA P_o = 18mW	EEx ia	IIB	3.86µF	600mH	4.15mH/Ω
		IIC	620nF	150mH	1.03mH/Ω

Magnetic 50mV (terminals 5-3, 6-4)	Protection	Group	Allowed Capacitance	Allowed Inductance	L_oR_o Ratio
U_o = 14.7V I_o = 10mA P_o = 18mW	EEx ia	IIB	3.86µF	600mH	4.15mH/Ω
		IIC	620nF	150mH	1.03mH/Ω

Vortex 6V (terminals 1, 2-3)	Protection	Group	Allowed Capacitance	Allowed Inductance	L_oR_o Ratio
U_o = 26.5V I_o = 82mA P_o = 520mW	EEx ia	IIB	730nF	8mH	0.26mH/Ω
		IIC	95nF	2mH	0.06mH/Ω

Vortex 3V (terminals 0, 2-3)	Protection	Group	Allowed Capacitance	Allowed Inductance	L_oR_o Ratio
U_o = 26.5V I_o = 82mA P_o = 520mW	EEx ia	IIB	730nF	8mH	0.26mH/Ω
		IIC	95nF	2mH	0.06mH/Ω

Channel 1 Frequency Input

Field devices may only be connected to the terminals of one of the five following circuits. The terminals of the remaining four circuits must not be connected.

Namur/Contact (terminals 9-8)	Protection	Group	Allowed Capacitance	Allowed Inductance	L_oR_o Ratio
U_o = 14.7V I_o = 15mA P_o = 30mW	EEx ia	IIB	3.86µF	300mH	2.6mH/Ω
		IIC	620nF	80mH	0.65mH/Ω

Magnetic 500mV (terminals 10-12)	Protection	Group	Allowed Capacitance	Allowed Inductance	L_oR_o Ratio
U_o = 14.7V I_o = 10mA P_o = 18mW	EEx ia	IIB	3.86µF	600mH	4.15mH/Ω
		IIC	620nF	150mH	1.03mH/Ω

Magnetic 50mV (terminals 10-12, 9-11)	Protection	Group	Allowed Capacitance	Allowed Inductance	L_oR_o Ratio
U_o = 14.7V I_o = 10mA P_o = 18mW	EEx ia	IIB	3.86µF	600mH	4.15mH/Ω
		IIC	620nF	150mH	1.03mH/Ω

Vortex 6V (terminals 14, 13-12)	Protection	Group	Allowed Capacitance	Allowed Inductance	L_oR_o Ratio
U_o = 26.5V I_o = 82mA P_o = 520mW	EEx ia	IIB	730nF	8mH	0.26mH/Ω
		IIC	95nF	2mH	0.06mH/Ω

Vortex 3V (terminals 15, 13-12	Protection	Group	Allowed Capacitance	Allowed Inductance	L_oR_o Ratio
U_o = 26.5V I_o = 82mA P_o = 520mW	EEx ia	IIB	730nF	8mH	0.26mH/Ω
		IIC	95nF	2mH	0.06mH/Ω

Channel 0 Gate Input

Field devices may only be connected to the terminal of one of the three following circuits. The terminals of the remaining two circuits must not be connected.

Namur/Contact (terminals 23-24)	Protection	Group	Allowed Capacitance	Allowed Inductance	L_oR_o Ratio
U_o = 14.7V I_o = 15mA P_o = 30mW	EEx ia	IIB	3.86µF	300mH	2.6mH/Ω
		IIC	620nF	80mH	0.65mH/Ω

Magnetic 500mV (terminals 22-20)	Protection	Group	Allowed Capacitance	Allowed Inductance	L_oR_o Ratio
U_o = 14.7V I_o = 10mA P_o = 18mW	EEx ia	IIB	3.86µF	600mH	4.15mH/Ω
		IIC	620nF	150mH	1.03mH/Ω

Magnetic 50mV (terminals 22-20, 23-21)	Protection	Group	Allowed Capacitance	Allowed Inductance	L_oR_o Ratio
U_o = 14.7V I_o = 10mA P_o = 18mW	EEx ia	IIB	3.86µF	600mH	4.15mH/Ω
		IIC	620nF	150mH	1.03mH/Ω

Channel 1 Gate Input

Field devices may only be connected to the terminals of one of the three circuits. The terminals of the remaining two circuits must not be connected.

Namur/Contact (terminals 26-25)	Protection	Group	Allowed Capacitance	Allowed Inductance	L_oR_o Ratio
U_o = 14.7V I_o = 15mA P_o = 30mW	EEx ia	IIB	3.86µF	300mH	2.6mH/Ω
		IIC	620nF	80mH	0.65mH/Ω

Magnetic 500mV (terminals 27-29)	Protection	Group	Allowed Capacitance	Allowed Inductance	L_oR_o Ratio
U_o = 14.7V I_o = 10mA P_o = 18mW	EEx ia	IIB	3.86µF	600mH	4.15mH/Ω
		IIC	620nF	150mH	1.03mH/Ω

Magnetic 50mV (terminals 27-29, 26-28)	Protection	Group	Allowed Capacitance	Allowed Inductance	L_oR_o Ratio
U_o = 14.7V I_o = 10mA P_o = 18mW	EEx ia	IIB	3.86µF	600mH	4.15mH/Ω
		IIC	620nF	150mH	1.03mH/Ω

Relay Outputs

Relay Output (terminals 17, 18, 37 or 31, 32, 46)	Protection	Group	Internal Capacitance	Internal Inductance
U_i = 28V I_i = 93mA P_i = 651mW	EEx ia	IIB	Negligible	Negligible
		IIC	Negligible	Negligible

1797-PS1E FLEX Ex Power Supply

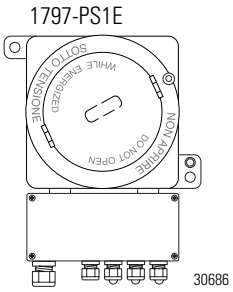

Installation in Zone 1

The 1797-PS1E power supply has a protection factor of IP65. Refer to the specifications table for the IS module type.

ATTENTION

The power supply cannot be used in an intrinsically safe environment after its outputs have been exposed to non-intrinsically safe signals.

Installation in Zone 22

The housing type of the power supply is applicable for the use in Zone 22. It corresponds with the category 3D according to RL 94/9 EG and is marked with a type label accordingly. If the junction box must be opened for maintenance purposes during operation, the power supply must be free of dust deposits so that after the opening no dust penetrates inside.

Outputs

When using an intrinsically safe electrical apparatus according to EN50020, the European directives and regulations must be followed.

The channels in the power supply are electrically connected to each other and have a common +V line.

IMPORTANT

You cannot interconnect lines because of the intrinsic safety requirements.

Typical Wiring Configurations

Terminal Base Assignments

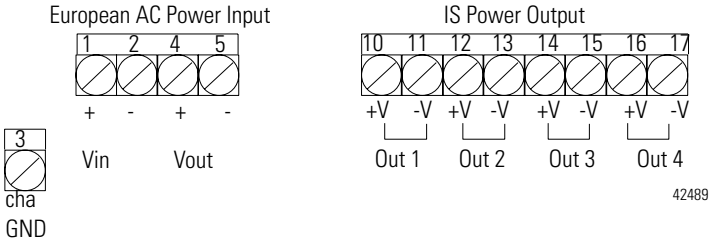

Intrinsically Safe Specifications

For a full list of specifications, refer to FLEX Ex 85-250V AC In/Quad-Ex DC Out Power Supply Installation Instructions, publication 1797-5.33.

Specifications	1797-PS1E (Series A)	1797-PS1E (Series B)
Inset Voltage Range	85 to 250V dc	
Voltage U_0	≤9.5V	
Current I_0	≤1A	
C_0 (IIC)	≤500 nF	
L_0 (IIC)	≤8 µH	
Operational Temperature	-20 to 70°C (-4 to 158°F)	
Agency Certification	EEx de [ib] IIC T4	II 2G EEx de [ib] IIC T4 II 3D IP54 T90°C
Certificates	BVS 98.D.2055X Ex CE	DMT 02 ATEX E253 X Ex CE

ATTENTION

Once power has been applied, wait 15 minutes after disconnecting before opening cover.

1797-PS2E2 FLEX Ex Power Supply

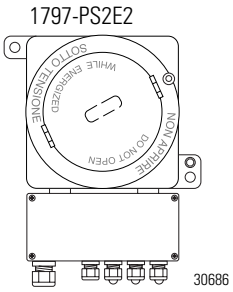

Installation in Zone 1

The 1797-PS2E2 power supply has a protection factor of IP54. Refer to the specifications table for the IS module type.

ATTENTION

The power supply cannot be used in an intrinsically safe environment after its outputs have been exposed to non-intrinsically safe signals.

Installation in Zone 22

The housing type of the power supply is applicable for use in Zone 22. It corresponds with the category 3D according to RL 94/9 EG and is marked with a type label accordingly. If the junction box must be opened for maintenance purposes during operation, the power supply must be free of dust deposits so that after the opening, no dust penetrates inside.

Outputs

When using an intrinsically safe electrical apparatus according to EN50020, the European directives and regulations must be followed.

The channels in the power supply are electrically connected to each other and have a common +V line.

IMPORTANT

You cannot interconnect lines because of the intrinsic safety requirements.

Typical Wiring Configurations

Terminal Base Assignments

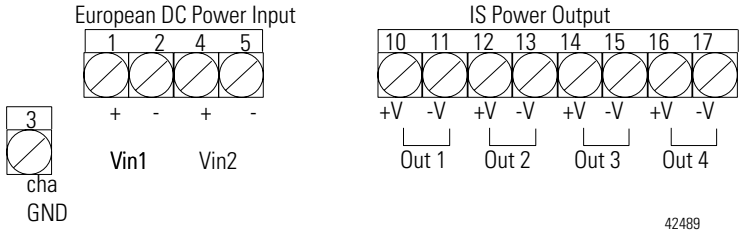

Intrinsically Safe Specifications

For a full list of specifications, refer to FLEX Ex Power Supply Installation Instructions, publication 1797-5.8.

Specifications	1797-PS2E2
Inset Voltage Range	18 to 32V dc
Voltage U_0	≤9.5V
Current I_0	≤1A
C_0 (IIC)	≤500 nF
L_0 (IIC)	≤8 µH
Operational Temperature	-20 to 70°C (-4 to 158°F)
Agency Certification	II 2G EEx de [ib] IIC T4 II 3D IP54 T90C
Certificates	DMT 02 ATEX E253 X Ex CE

ATTENTION

Once power has been applied, wait 15 minutes after disconnecting before opening cover.

1797-ACNR15 ControlNet Ex Redundant Media Adapter

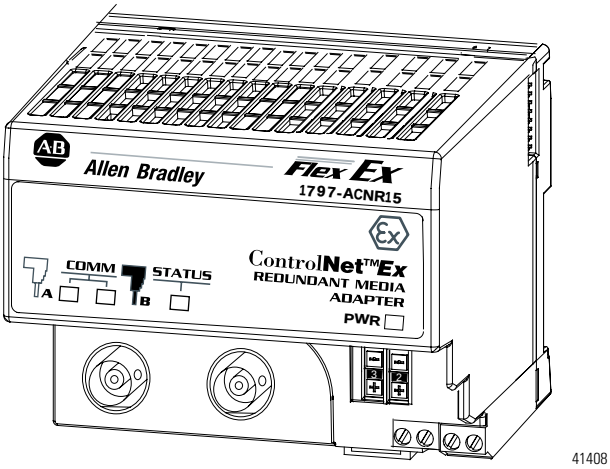

Module Installation

Use the redundant media adapter module to connect FLEX Ex modules to the ControlNet Ex network.

Inputs/Outputs

Do not apply any non-intrinsically safe signals to the adapter.

When using an intrinsically safe electrical apparatus according to EN50020, the European directives and regulations must be followed.

Intrinsically Safe Specifications

For a full list of specifications, refer to ControlNet Ex Redundant Media Adapter Installation Instructions, publication 1797-5.14.

ControlNet Ex BNC (ChA and ChB)	Oscillation powered by: $U_0 \leq 5.4V$ dc $I_0 \leq 160mA$ ac coupled with high-pass filter $f_{-3} \geq 500kHz$
Output (intrinsically safe) (16 position male/female flexbus connector)	$U_0 \leq 5.8V$ $I_0 \leq 400mA$ $P_0 \leq 2.16W$ $L_0 \leq 10\mu H$ $C_0 \leq 65\mu F$
Power Supply (+V, -V Intrinsically Safe)	$U_i \leq 9.5V$ dc $I_i \leq 1A$ $P_i \leq 9.5W$ L_i = Negligible $C_i \leq 120nF$
Operational Temperature	-20 to 70°C (-4 to 158°F)
Agency Certification	II 2G EEx ib IIB/IIC T4
Certificates	DMT 99 ATEX E 008 X

1797-RPA ControlNet Ex Modular Repeater Adapter and 1797-RPFM Fiber Repeater Module, Medium Distance

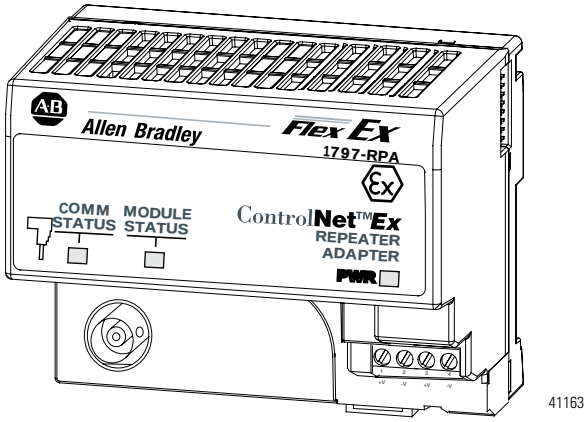

1797-RPA

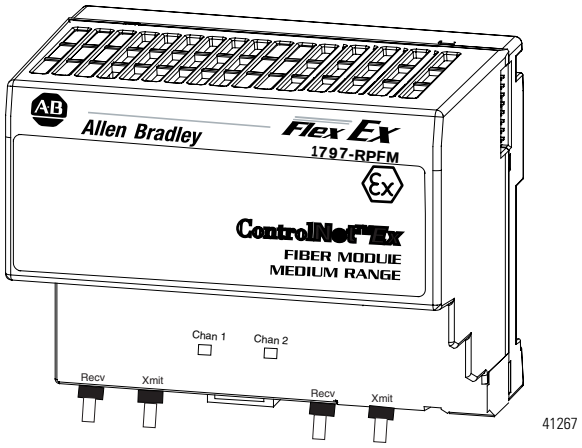

1797-RPFM

Module Installation

A maximum of two 1797-RPFM modules may be used with one 1797-RPA adapter.

Inputs/Outputs

Do not apply any non-intrinsically safe signals to the adapter or fiber modules.

When using an intrinsically safe electrical apparatus according to EN50020, the European directives and regulations must be followed.

Intrinsically Safe Specifications

For a full list of specifications, refer to ControlNet Ex Modular Repeater Adapter and Fiber Repeater Module, Medium Distance Installation Instructions, publication 1797-5.15.

1797-RPA Specifications	
ControlNet Ex BNC	Oscillation powered by: $U_0 \leq 5.4V$ dc $I_0 \leq 201mA$ ac coupled with high-pass filter f $\geq$ 500kHz
Output (intrinsically safe) (30 pin male TTL bus connector)	Manufacturer specific bus $U_0 \leq 5.4V$ $I_0 \leq 201mA$ $P_0 \leq 1.09W$ $L_0 \leq 0.45\mu H$ $C_0 \leq 71\mu F$
Power Supply (+V, -V Intrinsically Safe)	$U_i \leq 9.5V$ dc $I_i \leq 1A$ $P_i \leq 9.5W$ L_i = Negligible $C_i \leq 120nF$
Operational Temperature	-20 to 70°C (-4 to 158°F)
Agency Certification	II (1) 2G EEx ia/ib IIB/IIC T4
Certificates	DMT 99 ATEX E 011 X Ex CE

1797-RPM Specifications	
Input (intrinsically safe) (30 pin female TTL bus connector)	$U_i \leq 5.4V$ $I_i \leq 201mA$ $P_i \leq 1.1W$ $L_i \leq 15\mu H$ $C_i \leq 41\mu F$
Output (intrinsically safe) (30 pin male TTL bus connector)	$U_0 \leq 5.4V$ $I_0 \leq 201mA$ $P_0 \leq 1.1W$ $L_0 \leq 0.45mH$ $C_0 \leq 71\mu F$
Fiber Optic Transmitter Ch1 & Ch 2	Optical Peak Output Power P optical $\leq$ 1mW
Operational Temperature	-20 to 70°C (-4 to 158°F)
Agency Certification	II (1) 2G EEx ia/ib IIB/IIC T4
Certificates	DMT 99 ATEX E 011 X Ex CE

1797-BIC Bus Isolator Module and 1797-CEC Flexbus Connector

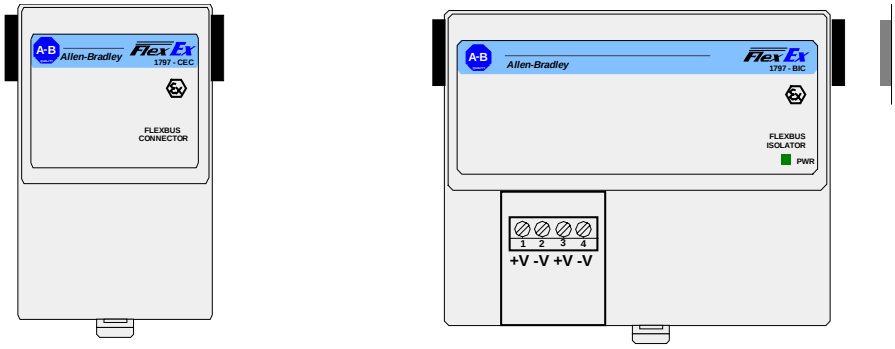

1797-CEC 1797-BIC 42864

General Installation

The 1797-CEC and -BIC must not be exposed to the environment. These modules have a protection factor of IP20. Provide a suitable metal enclosure. If these modules are to be installed into a Zone 2 area, then ensure that this enclosure has a protection class of IP54.

ATTENTION

The 1797-BIC cannot be used as an associated apparatus after its FLEX Ex backplane connector has been exposed to non-intrinsically safe signals.

Make certain that you only connect the FLEX Ex backplane connector to other intrinsically safe system modules to maintain the integrity of the intrinsically-safe backplane.

ATTENTION

For proper operation, cycle power to the 1797-BIC at the same time power is cycled to the associated adapter.

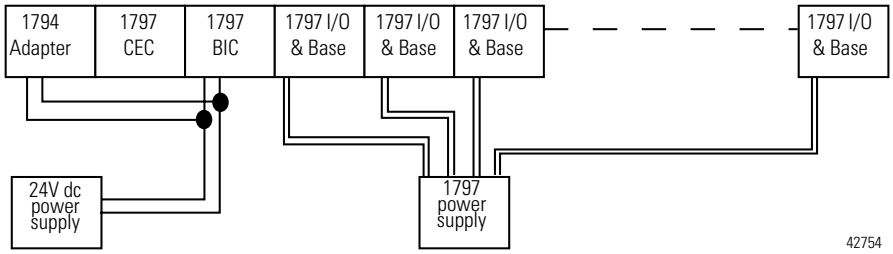

Inputs/Outputs

Do not apply any non-intrinsically safe signals to the FLEX Ex backplane connector.

When using as an intrinsically safe electrical apparatus according to EN50020, the European directives and regulations must be followed.

Intrinsically Safe Specifications

For a full list of specifications, refer to FLEX Ex Bus Isolator Installation Instructions, publication 1797-5.13.

1797-BIC Specifications	
Output (Intrinsically Safe) (16 pin male and female flexbus connector)	$U_0 \leq$ 5.75V dc $I_0 \leq$ 400mA $P_0 \leq$ 2.05W $L_0 \leq$ 100µH $C_0 \leq$ 39µF
Operational Temperature	-20 to 70°C (-4 to 158°F)
Agency Certification	II (2)G [EEx ib] IIC II (2D)
Certificates	DMT 00 ATEX E056 X Ex CE
Declaration of Conformity Directive 94/9 EC	Zone 2 II 3G EEx nA IIC T4 X

1797-CEC Specifications	
Operational Temperature	-20 to 70°C (-4 to 158°F)
Declaration of Conformity Directive 94/9 EC	Zone 2 II 3G EEx nA IIC T4 X

Notes:

1797-BCNR Redundant ControlNet Ex Barrier

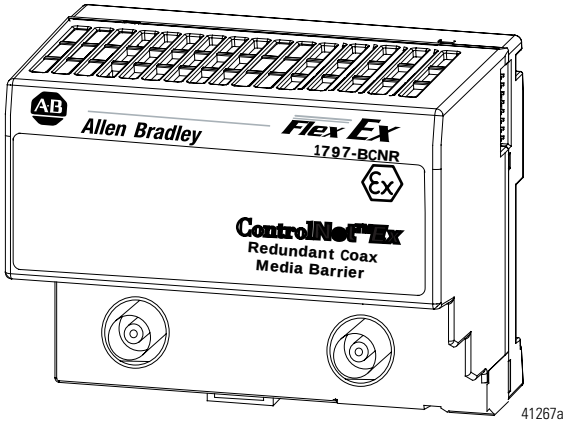

1797-BCNR

Description

The ControlNet Ex barrier type 1797-BCNR functions as a galvanic isolation barrier for signal between the non-intrinsic ControlNet system an intrinsically-safe ControlNet Ex system. The 1797-BCNR is installed in the safe area.

Inputs/Outputs

Do not apply any non-intrinsically safe signals to the intrinsically-safe side of the 1797-BCNR.

The BNC covers are provided with a cover plug. This cover plug can only be removed when a cable is connected. The IS connection must not be connected to any signals that exceed the intrinsically-safe values of the ControlNet Ex system.

Intrinsically Safe Specifications

The ControlNet Ex barrier type 1797-BCNR is an associated apparatus according to EN 50020. If the ControlNet Ex barrier is connected to intrinsically-safe circuits, the applicable national and local construction, installation, and operating regulations must be heeded (in Germany DIN EN 50020, DIN VDE 0165).

For a full list of specifications, refer to Redundant ControlNet Barrier Installation Instructions, publication 1797-5.1x.

1797-BCNR Specifications	
IS Output (BNC Connector in Blue Area)	Maximum open circuit voltage U_o is 7V Maximum current I_o is 14mA (at the resonant frequency of 66kHz)
Operating Temperature	-20 to +70°C (-4 to +158°F)
Agency Certification	II (2) G [EEx ib] IIC
Certificates	DMT 99 ATEX E065 X Ex CE 0102

Repair

The ControlNet Ex barrier is not field-repairable. Any attempt to open this device will void the warranty and IS certification. If repair is necessary, return this device to the factory.

General UL, C-UL Certification Information

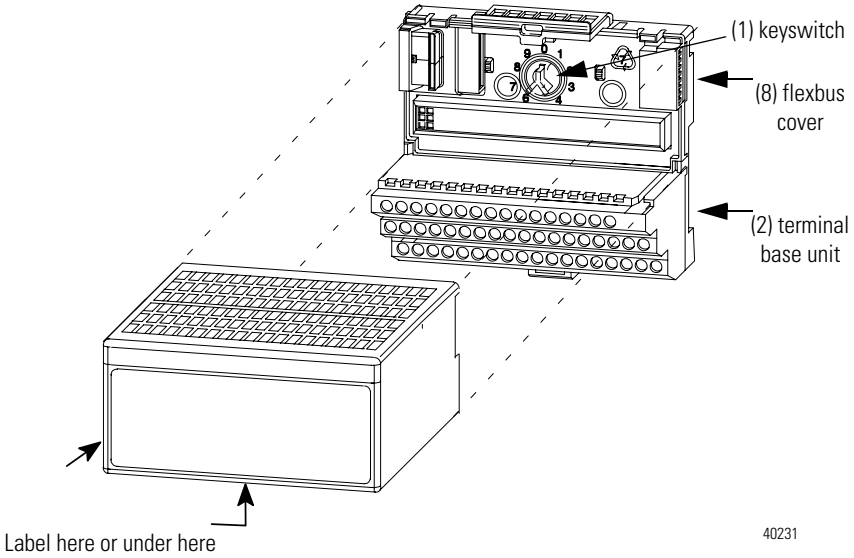

Module Installation

FLEX Ex I/O modules must be used with a 1797-TB3 or -TB3S intrinsically safe terminal base unit.

You will need to rotate the keyswitch (1) to the correct position depending on the module. Refer to the module's installation instructions for more information. **Do not change the position of the keyswitch after wiring the terminal base unit.**

Make certain that you only connect terminal base units to other intrinsically safe system modules, adapters and power supplies to maintain the integrity of the intrinsically-safe system.

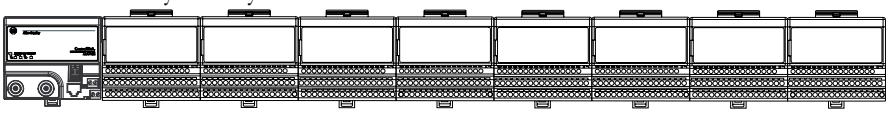

Remove cap plug and attach another intrinsically safe terminal base unit (2) to the right of the terminal base unit if required.

Do not remove the flexbus cover (8) on the right-most terminal base unit.

Installation in Division 1/ Zone 1

Modules, adapters, and terminal base units must not be exposed to the environment. Provide a suitable enclosure.

ATTENTION

Modules, adapters, and terminal base units cannot be used in an intrinsically safe environment after they have been exposed to non-intrinsically safe signals.

Electrostatic Charge

Protect the system against electrostatic charge. Post a sign near each module: **Attention! Avoid electrostatic charge.** For your convenience, a sign which can be cut out and posted is included in this chapter.

UL, C-UL I/O Entity Parameters

If this product has the UL/C-UL mark, it has been designed, evaluated, tested, and certified to meet the following standards:

- UL 913, 1988, Intrinsically Safe Apparatus and Associated Apparatus for Use in Class I, II, and III Division 1, Hazardous (Classified) Locations
- UL 1203, Explosion-Proof and Dust-Ignition-Proof Electrical Equipment for Use in Hazardous (Classified) Locations
- UL 2279, Electrical Equipment for Use in Class I, Zone 0, 1, and 2 Hazardous (Classified) Locations
- UL 508, Industrial Control Equipment
- CSA C22.2 No. 157-92, Intrinsically Safe and Non-Incendive Equipment for Use in Hazardous Locations
- CSA C22.2 No. 30-M1986, Explosion-Proof Enclosures for Use in Class I Hazardous Locations
- CSA-E79-0-95, Electrical Apparatus for Explosive Gas Atmospheres, Part 0: General Requirements
- CSA-E79-11-95, Electrical Apparatus for Explosive Gas Atmospheres, Part 11: Intrinsic Safety “i”
- CSA C22.2 No. 14-95, Industrial Control Equipment

Repair

Modules are not field-repairable. Any attempt to open a module will void the warranty and the IS certification. If repair is necessary, return the module to the manufacturer.

Attention: Avoid electrostatic charge.

ControlNet Ex System

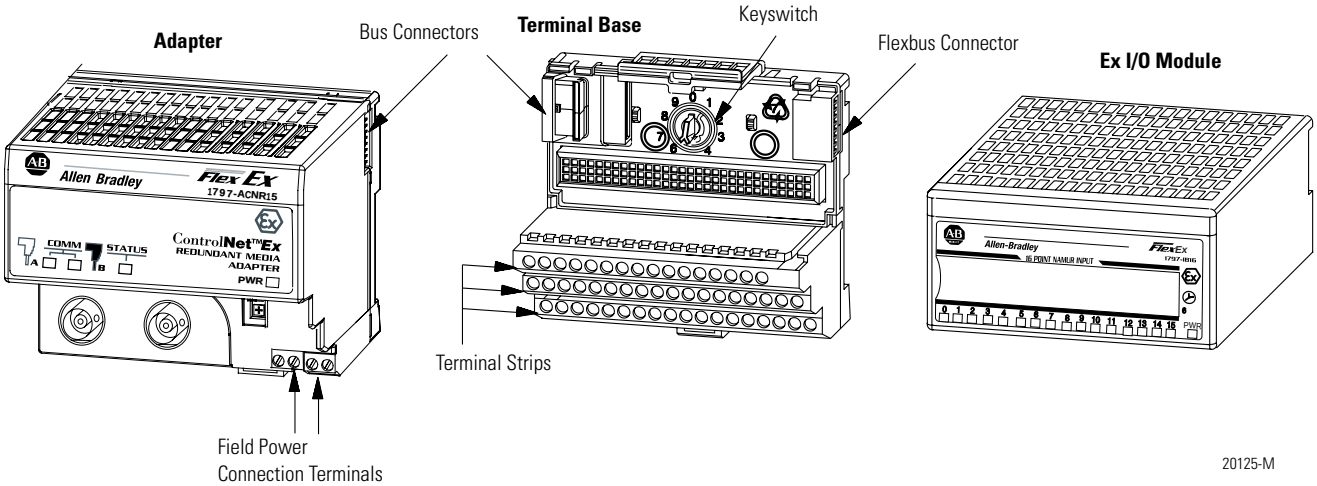

ControlNet Ex System Diagram

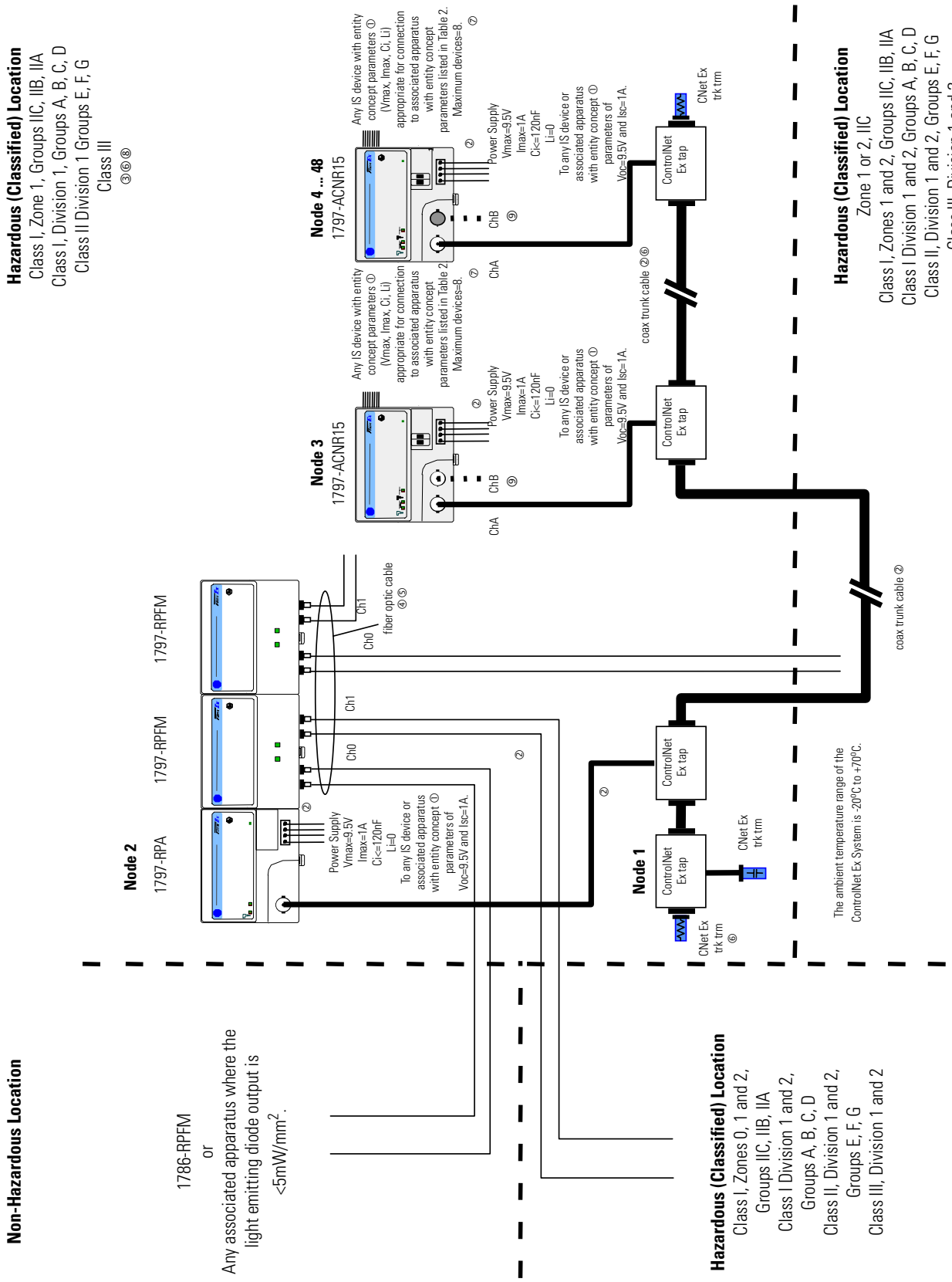

Describing the ControlNet Ex System Diagram

A maximum of 48 ControlNet Ex™ nodes may be connected together by 250m of coax cable and 48 taps. The distance increases to 1000m when you use only 2 taps. See the table below for more information.

The fiber media of the 1797-RPFM can be installed in a hazardous location (Class I, Zones 0, 1, and 2; Class I, Division 1 and 2; Class II, Division 1 and 2; Class III, Division 1 and 2) to connect two 1797-RPFM modules or they can be installed through different locations into the non-hazardous location to connect the 1797-RPFM with any approved associated apparatus.

All cables and fiber media that are not light blue must be marked as IS using the 1797-EXMK marking kit or other locally approved IS identification and/or segregation method.

During the installation of the ControlNet Ex system, all metallic parts must be isolated to prevent an earth connection (high voltage withstanding of isolating material must be > 500V ac).

System Diagram Name	Catalog Number	Catalog Name	Description
1797-RPA	1797-RPA	ControlNet Ex Modular Repeater Adapter	Represents one ControlNet Ex node and must be connected to a coax trunk cable by 1797-TPx
1797-RPFM	1797-RPFM	ControlNet Ex Fiber Repeater Module, Medium Distance	Allows connection of a maximum of two devices per 1797-RPA and is powered directly by 1797-RPA
1797-ACNR15	1797-ACNR15	Redundant Media ControlNet Ex Adapter	Represents one ControlNet Ex node and must be connected to a coax trunk cable by 1797-TPx -each one with two redundant output channels that are connected to different ControlNet Ex networks (coax cables and 1797-TPx)
CNet Ex Tap Trm	1797-TCAP	ControlNet Ex Tap (Dummy) Terminator	Represents one ControlNet Ex node and is a simple capacitor (56pF) with a coax connector
ControlNet Ex Tap	1797-TPx	ControlNet Ex Coax Tap	Four types of connections available: S (straight t-tap), R (right angle t-tap), YS (straight y-tap), and YR (right angle y-tap) - a maximum of 48 taps can be connected together by coax trunk cable
CNet Ex Trk Trm	1797-XT	ControlNet Ex Trunk Terminator	Simple resistor (75Ω) with coax connector that must be on each end of the ControlNet Ex coax trunk for termination
Coax Trunk Cable	1797-RG6	Quad-Shield, RG-6 75Ω Coax Trunk Cable	Maximum (functional) length between 2 1797-TPx is 3280ft (1000m) - each 1797-TPx reduces the (functional) coax cable length by 53.4ft (16.3m)
None	None	Standard Coax Trunk Cable BNC Couplers	Different standard cable couplers, 90°, 180°, etc.

Certified Equivalent ControlNet Ex System Diagram Items

You may use these items as equivalents for the items shown on the system diagram.

System Diagram Name	Catalog Number	Source
1797-RPA	1797-RPA	Allen-Bradley
	RSD-CFA-Ex.CN	Pepperl+Fuchs
1797-RPFM	1797-RPFM	Allen-Bradley
	RSD-FC-Ex2.CN	Pepperl+Fuchs
1797-ACNR15	1797-ACNR15	Allen-Bradley
	RSD-GW-Ex2.CN	Pepperl+Fuchs
Coax Trunk Cable[1]	1797-RG6	Allen-Bradley
	3092A[2]	Belden Wire & Cable Co.
	3092A with blue jacket	Belden Wire & Cable Co.
ControlNet Ex Tap	1797-TPx	Allen-Bradley
	RS-TPx-Ex	Pepperl+Fuchs
CNet Ex Trk Trm	1797-XT	Allen-Bradley
	RS-XT-Ex	Pepperl+Fuchs
CNet Ex Tap Trm	1797-TCAP	Allen-Bradley
	RS-TCAP-Ex	Pepperl+Fuchs

1 In addition to these cable types, the following specification can be followed to allow additional types:
Cable Impedance = 75Ω ± 3Ω
Cable Capacitance = ≤5.94nF per 100m
Cable Resistance = ≥9.08Ω per 100m

Cable Attenuation	0.2MHz ≥ 0.93dB/100m	5MHz ≥ 1.39dB/100m
(-20 to +70°C)	0.5MHz ≥ 0.95dB/100m	10MHz ≥ 1.86dB/100m
	1MHz ≥ 1.07dB/100m	20MHz ≥ 2.73dB/100m
	2MHz ≥ 1.16dB/100m	50MHz ≥ 4.33dB/100m

2 Belden Wire & Cable 1189A may be used, but with functional loss of communication distance and/or nodes.

① The entity concept allows interconnection of intrinsically safe apparatus with associated apparatus not specifically examined in combination as a system when the approved values of V_{oc} and I_{sc} or V_t and I_t of the associated apparatus are less than or equal to V_{max} and I_{max} of the intrinsically safe apparatus and the approved values of C_a and L_a of the associated apparatus are greater than C_i + C_{cable} and L_i + L_{cable} respectively for the intrinsically safe apparatus.

② Wiring methods must be in accordance with the National Electric Code, ANSI/NFPA 70, Article 504 and 505 or the Canadian Electric Code CSA C22.1, Part 1, Appendix F. For additional information refer to ANSI/ISA RP12.6.

③ WARNING: Substitution of components may impair intrinsic safety. AVERTISSEMENT: La substitution de composant peut compromettre la securite intrinseque.

④ If fiber optic cable is provided with a metal shield, it must be connected to a dedicated intrinsic safety ground in the non-hazardous location and tied back in the hazardous location or be connected to a ground in the hazardous location and tied back in the non-hazardous location.

⑤ The glass fiber must have a minimum diameter of 6µm.

⑥ For Class II, Division 1, Groups E, F, G and Class III, modules must be installed in a UL listed Type 4, 4X, 6, 6P, 9, 12, or 12K enclosure. (The power supply does not need to be put into an additional enclosure. Refer to the power supply section of this manual for more information.)

⑦ Any combination of up to eight FLEX Ex I/O modules may be connected. This includes using 1794-CE3, 1797-CE3, 1794-CE1, and 1797-CE1 cables.

⑧ The ambient temperature range (T_{amb}) for this system is -20°C to 70°C.

⑨ Channel B is intended for a redundant connection and is identical to the channel A configuration.

Installation in Division 1/ Zone 1

Modules must not be exposed to the environment. Provide a suitable enclosure.

ATTENTION

Modules cannot be used in an intrinsically safe environment after they have been exposed to non-intrinsically safe signals.

Electrostatic Charge

Protect the system against electrostatic charge. Post a sign near each module: **Attention! Avoid electrostatic charge.** For your convenience, a sign which can be cut out and posted is included in this chapter.

Repair

Modules are not field-repairable. Any attempt to open a module will void the warranty and the IS certification. If repair is necessary, return the module to the manufacturer.

Attention: Avoid electrostatic charge.

1797-TB3 FLEX Ex Terminal Base Unit

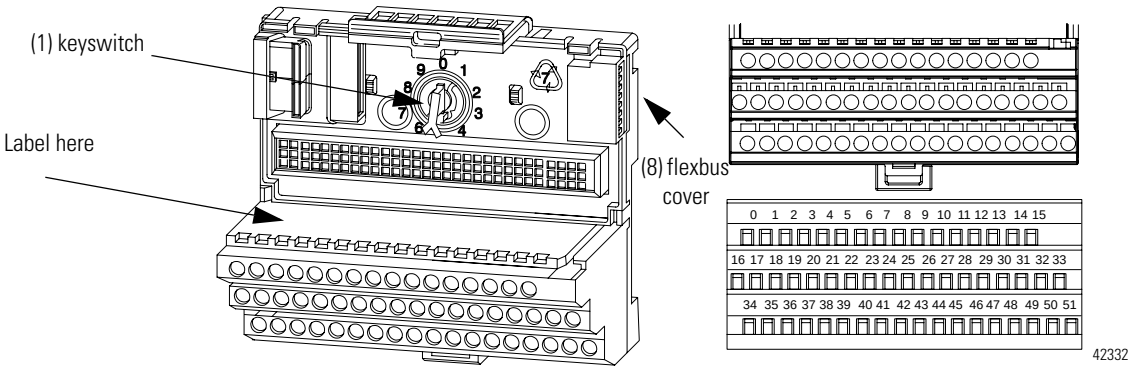

General Information

FLEX Ex I/O modules must be used with a 1797-TB3 or -TB3S intrinsically safe terminal base unit.

Module Installation

You will need to rotate the keyswitch (1) to the correct position depending on the module. Refer to the module's installation instructions for more information. **Do not change the position of the keyswitch after wiring the terminal base unit.**

Make certain that you only connect terminal base units to other intrinsically safe system modules or adapters to maintain the integrity of the intrinsically-safe backplane.

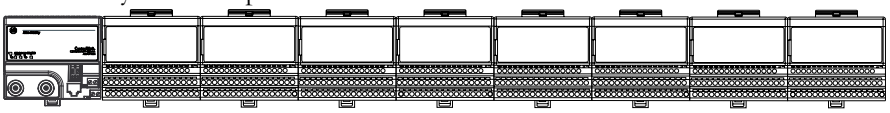

Installation in Division 1/ Zone 1

Do not remove the flexbus cover (8) on the right-most terminal base unit.

Inputs

Do not apply any non-instrinsically safe signals to the terminal base.

The terminals in the terminal base unit may be electrically connected to each other by the insertion of FLEX Ex I/O modules. See the module installation instructions to determine this.

IMPORTANT When interconnecting several lines, you must consider the total accumulated power and check for intrinsic safety requirements.

Description

The 1797-TB3 terminal base has 36 wiring connections to/from a plug-in module. The use of each terminal depends on the module mounted in this base.

The 1797-TB3 terminal base also has connections for cold junction compensation and terminals designated for shield termination to chassis ground.

The terminal base is equipped with a factory-installed tab cover for the backplane bus connection. The tab cover may be removed only when the terminal base unit is connected to other terminal base units..

Wiring Connections for Terminal Base 1797-TB3

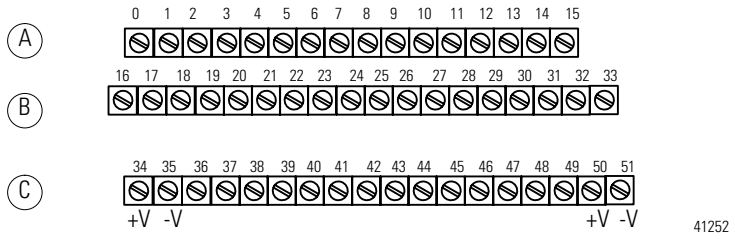

No connections allowed to terminals 36 and 49

ATTENTION

- Make certain that you power the terminal base unit with an intrinsically safe power supply. Do not exceed the values listed in the specifications for the terminal base unit.
- Do not use the unused terminals on the terminal base unit. Using these terminals as supporting terminals can result in damage to modules and/or unintended operation of your system.

Intrinsically Safe Specifications

For a full list of specifications, refer to the FLEX Ex Terminal Base Installation Instructions, publication 1797-5.1.

Operational Temperature	-20 to 70°C (-4 to 158°F)
Agency Certification	Class I Division 1 & 2 Groups A-D T4 Class I Zone 1 & 2 AEx ia IIC T4 Class II Division 1 Groups E, F, G; Class III[1]
Certificates	UL Certificate Number 99.19699 c UL us Class I Division 1 Hazardous

1 For Class II Division 1 Groups E, F, G; Class III, modules must be installed in a UL listed Type 4, 4X, 6, 6P, 9, or 12K enclosure.

Notes:

1797-TB3S FLEX Ex Terminal Base Unit

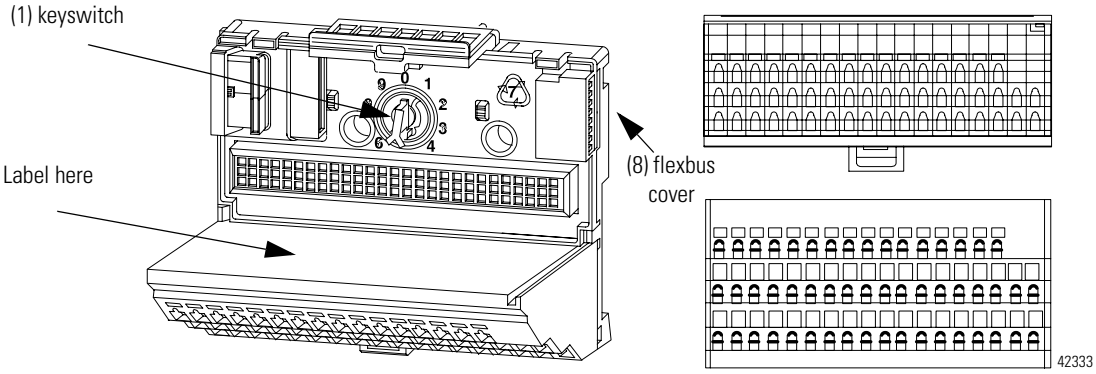

General Information

FLEX Ex I/O modules must be used with a 1797-TB3 or -TB3S intrinsically safe terminal base unit.

Module Installation

You will need to rotate the keyswitch (1) to the correct position depending on the module. Refer to the module's installation instructions for more information. **Do not change the position of the keyswitch after wiring the terminal base unit.**

Make certain that you only connect terminal base units to other intrinsically safe system modules or adapters to maintain the integrity of the intrinsically-safe backplane.

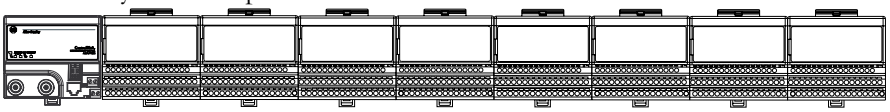

Installation in Division 1/ Zone 1

Do not remove the flexbus cover (8) on the right-most terminal base unit.

Inputs

Do not apply any non-instrinsically safe signals to the terminal base.

The terminals in the terminal base unit may be electrically connected to each other by the insertion of FLEX Ex I/O modules. See the module installation instructions to determine this.

IMPORTANT When interconnecting several lines, you must consider the total accumulated power and check for intrinsic safety requirements.

Description

The 1797-TB3S terminal base has 36 wiring connections to/from a plug-in module. The use of each terminal depends on the module mounted in this base.

The 1797-TB3S terminal base also has connections for cold junction compensation and terminals designated for shield termination to chassis ground.

The terminal base is equipped with a factory-installed tab cover for the backplane bus connection. The tab cover may be removed only when the terminal base unit is connected to other terminal base units.

Wiring Connections for Terminal Base 1797-TB3S

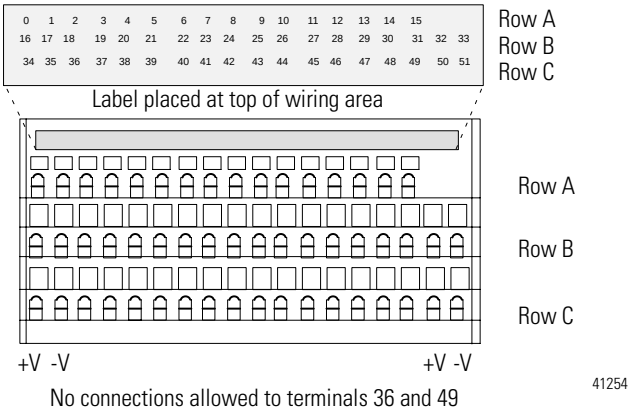

ATTENTION

- Make certain that you power the terminal base unit with an intrinsically safe power supply. Do not exceed the values listed in the specifications for the terminal base unit.
- Do not use the unused terminals on the terminal base unit. Using these terminals as supporting terminals can result in damage to modules and/or unintended operation of your system.

Intrinsically Safe Specifications

For a full list of specifications, refer to the FLEX Ex Spring Clamp Terminal Base Installation Instructions, publication 1797-5.2.

Operational Temperature	-20 to 70°C (-4 to 158°F)
Agency Certification	Class I Division 1 & 2 Groups A-D T4 Class I Zone 1 & 2 AEx ia IIC T4 Class II Division 1 Groups E, F, G; Class III[1]
Certificates	UL Certificate Number 99.19699 c UL us Class I Division 1 Hazardous

1 For Class II Division 1 Groups E, F, G; Class III, modules must be installed in a UL listed Type 4, 4X, 6, 6P, 9, or 12K enclosure.

Notes:

1797-IBN16 FLEX Ex 16 NAMUR Input Module

General Information

Modules must be used with a 1797-TB3 or -TB3S intrinsically safe terminal base unit.

Module Installation

Rotate keyswitch on terminal base unit clockwise to position 6 as required for this type of module. **Do not change the position of the keyswitch after wiring the terminal base unit.**

Inputs

Each input can be operated from a NAMUR sensor or a mechanical contact (if mechanical inputs are used). **Do not apply any non-intrinsically safe signals to this module.**

The channels in this module are electrically connected to each other and have a common plus-line.

IMPORTANT When interconnecting several lines, you must consider the total accumulated power and check for intrinsic safety.

Wiring to a 1797-TB3 or -TB3S Terminal Base Unit

Connect wiring to the terminal base as shown below.

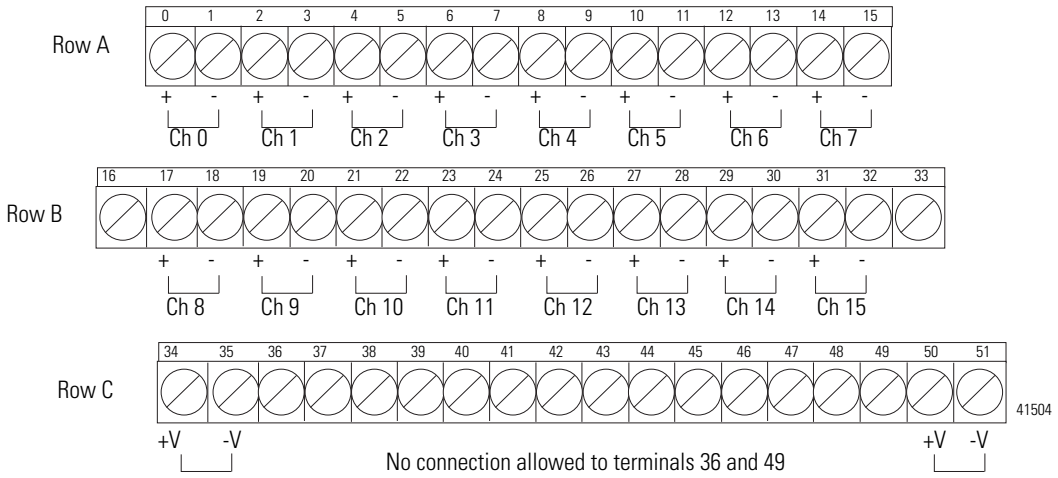

ATTENTION

Do not use any unused terminals on this terminal base unit. Using these terminals as supporting terminals can result in damage to the module and/or unintended operation of your system.

Intrinsically Safe Specifications

For a full list of specifications, refer to FLEX Ex 16 NAMUR Input Module Installation Instructions, publication 1797-5.7.

Operating Temperature	-20 to +70°C (-4 to +158°F)
Agency Certification	Class I Division 1 Groups A-D T4 Class I Zone 1 AEx ib[ia] IIC T4 ⓢClass II Division 1 Groups E, F, G; Class III
Certificates	UL Certificate Number 99.19699 c UL us

UL, C-UL I/O Entity Parameters

Wiring Methods

- Wiring method 1 - Each channel is wired separately.
- Wiring method 2 - Multiple channels in one cable, providing each channel is separated in accordance with the National Electric Code (NEC) or Canadian Electric Code (CEC).

Table 1: Entity Values for Field Device Connections

Wiring Method	Channel	Terminals	V_{oc} (V)	I_{sc} (mA)	V_t (V)	I_t (mA)	Groups	C_a (µF)	L_a (mH)
1 and 2	Any one channel e.g. ch0	0(+), 1(-)	14.5	15	-	-	A, B, IIC	0.3	80.0
							C, E, IIB	0.9	320.0
							D, F, G, IIA	2.4	640.0

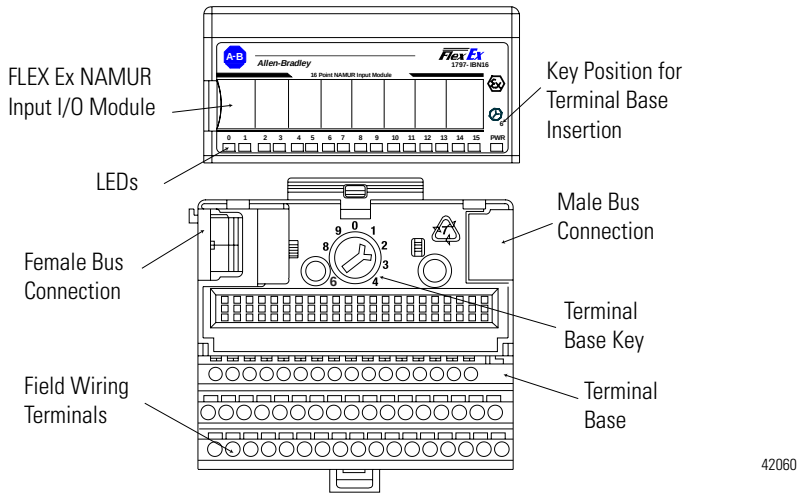

IMPORTANT A terminal base may or may not have an I/O module installed.

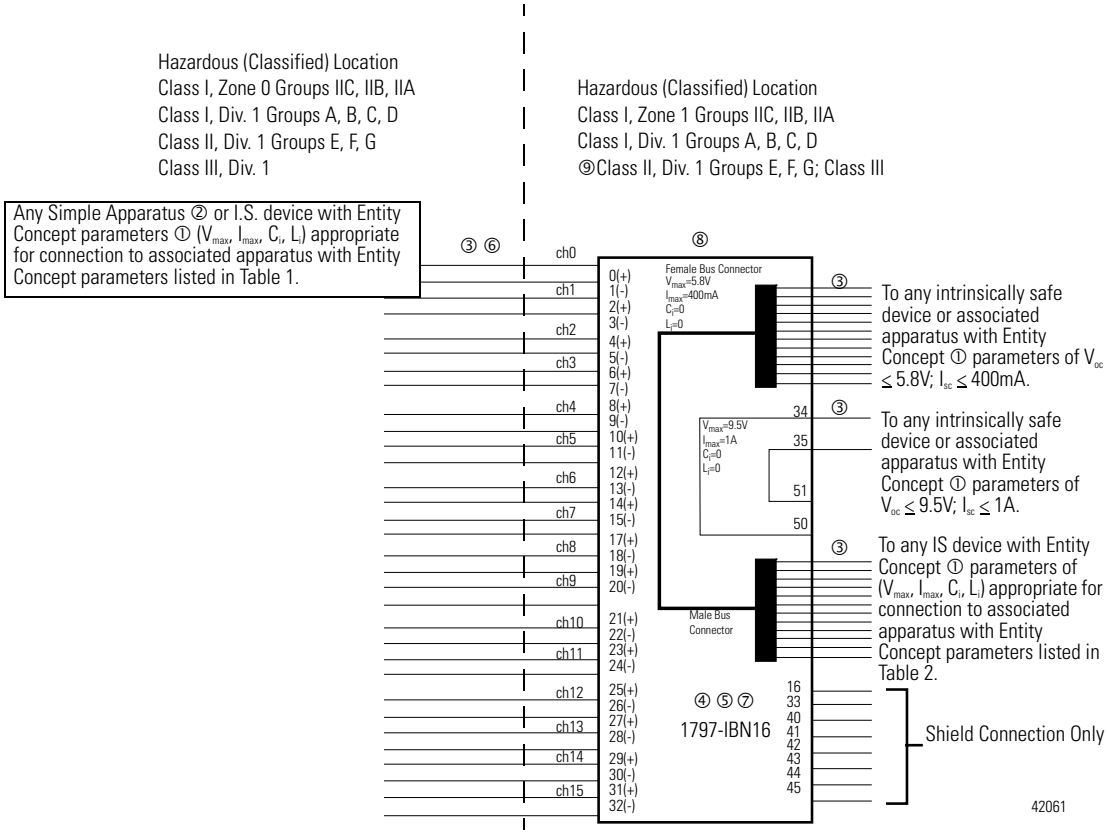

Table 2: Flexbus Entity Values Which are Allowed for the Next FLEX Ex I/O Module

Terminals	V_t (V)	I_t (mA)	Groups	C_a (μF)	L_a (μH)
Male Bus Connector	5.8	400	A-G IIC, IIB, IIA	3.0	3.0

Table 3: Flexbus Entity Values for this Module

Note: Any combination of up to eight FLEX Ex I/O modules may be attached on a flexbus.

Terminals	V_{max} (V)	I_{max} (mA)	Groups	C_i (μF)	L_i (μH)
Female Bus Connector	5.8	400	A-G IIC, IIB, IIA	0	0

① The entity concept allows interconnection of intrinsically safe apparatus with associated apparatus not specifically examined in combination as a system when the approved values of V_{oc} and I_{sc} or V_t and I_t of the associated apparatus are less than or equal to V_{max} and I_{max} of the intrinsically safe apparatus and the approved values of C_a and L_a of the associated apparatus are greater than C_i + C_{cable} and L_i + L_{cable} respectively for the intrinsically safe apparatus.

② Simple apparatus is defined as a device which neither generates nor stores more than 1.2V, 0.1A, 20µJ, or 25mW.

③ Wiring methods must be in accordance with the National Electric Code, ANSI/NFPA 70, Article 504 and 505 or the Canadian Electric Code CSA C22.1, Part 1, Appendix F. For additional information refer to ANSI/ISA RP12.6.

④ This module, 1797-IBN16, must be used with terminal base 1797-TB3 or 1797-TB3S.

⑤ Terminals 36-39, and 46-49 shall not be connected.

⑥ Any combination of up to eight channels may be connected in parallel and connected to simple apparatus in a hazardous location. If two channels are connected in parallel, the total cable inductance must be limited to 20mH for Groups A and B, 80mH for Groups C and E, and 160mH for Groups D, F, and G. If eight channels are connected in parallel, the total cable inductance must be limited to 2mH for Groups A and B, 8mH for Groups C and E and 16mH for Groups D, F, and G.

⑦ WARNING: Substitution of components may impair intrinsic safety.
AVERTISSEMENT: La substitution de composant peut compromettre la securite intrinseque.

⑧ The ambient operating temperature (T_{amb}) for this product is -20°C to 70°C.

⑨ Suitable for Class II, Division 1, Groups E, F, G and Class III when mounted in a UL listed Type 4, 4X, 6, 6P, 9, 12, or 12K enclosure.

Notes:

1797-OB4D FLEX Ex 24V dc Non-Isolated Source 4 Output Module

General Information

Modules must be used with a 1797-TB3 or -TB3S intrinsically safe terminal base unit.

Module Installation

Rotate keyswitch on terminal base unit clockwise to position 7 as required for this type of module. **Do not change the position of the keyswitch after wiring the terminal base unit.**

Outputs

Each output can operate a discrete field device. **Do not apply any non-intrinsically safe signals to this module.**

The channels in this module are electrically connected to each other.

Wiring to a 1797-TB3 or -TB3S Terminal Base Unit

Connect wiring to the terminal base as shown below.

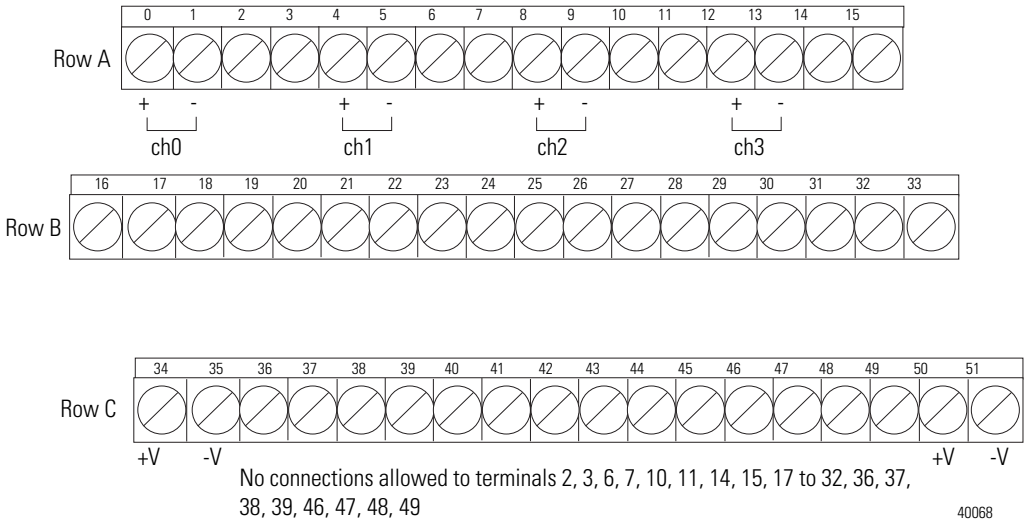

ATTENTION

Do not use any unused terminals on this terminal base unit. Using these terminals as supporting terminals can result in damage to the module and/or unintended operation of your system.

Intrinsically Safe Specifications

For a full list of specifications, refer to FLEX Ex 24V dc Non-Isolated Source 4 Output Module Installation Instructions, publication 1797-5.6.

Operating Temperature	-20 to +70°C (-4 to +158°F)
Agency Certification	Class I Division 1 Groups A-D T4 Class I Zone 1 AEx ib[ia] IIC T4 ®Class II Division 1 Groups E, F, G; Class III
Certificates	UL Certificate Number 99.19699 c UL us

UL, C-UL I/O Entity Parameters

Wiring Methods

- Wiring method 1: Each channel is wired separately.
- Wiring method 2: Multiple channels in one cable, providing each channel is separated in accordance with the National Electric Code (NEC) or Canadian Electric Code (CEC).

Table 1: Entity Values for Field Device Connections

Wiring Method	Channel	Terminals	V_{oc} (V)	I_{sc} (mA)	V_t (V)	I_t (mA)	Groups	C_a (μF)	L_a (mH)
1 and 2	Any one channel e.g. ch0	0(+), 1(-)	27.4	110.0	-	-	A, B, IIC	0.03	2.0
							C, E, IIB	0.09	8.0
							D, F, G, IIA	0.24	16.0

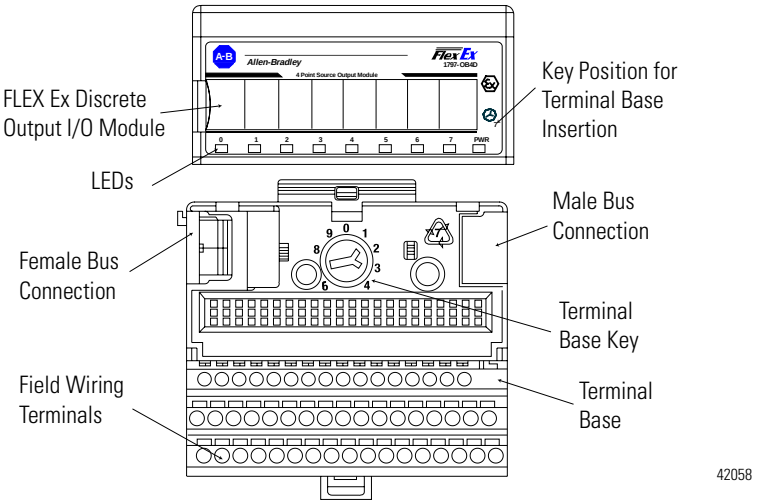

IMPORTANT A terminal base may or may not have an I/O module installed.

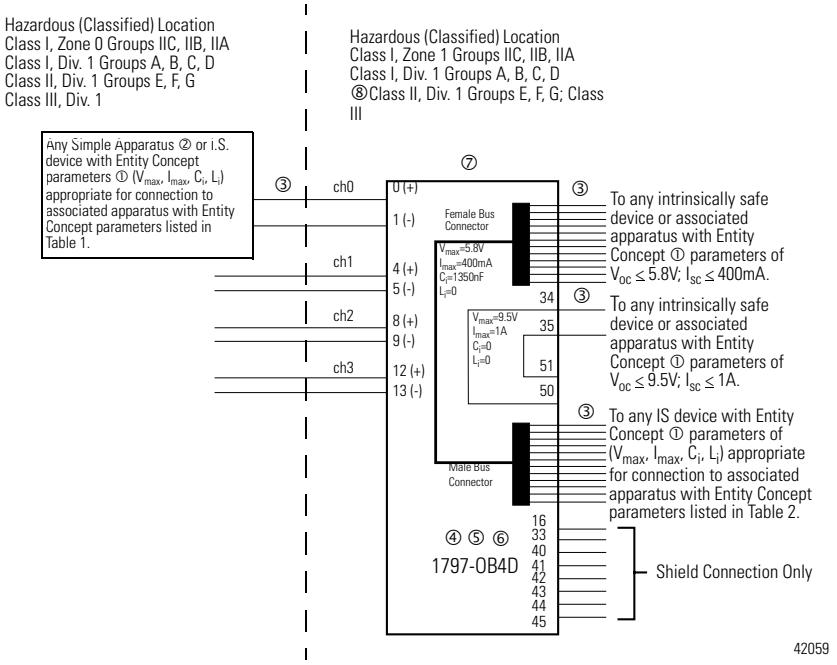

Table 2: Flexbus Entity Values Which are Allowed for the Next FLEX Ex I/O Module

Terminals	V_t (V)	I_t (mA)	Groups	C_a (μF)	L_a (μH)
Male Bus Connector	5.8	400	A-G IIC, IIB, IIA	3.0	3.0

Table 3: Flexbus Entity Values for this Module

Note: Any combination of up to eight FLEX Ex I/O modules may be attached on a flexbus.

Terminals	V_{max} (V)	I_{max} (mA)	Groups	C_i (μF)	L_i (μH)
Female Bus Connector	5.8	400	A-G IIC, IIB, IIA	1.35	0

① The entity concept allows interconnection of intrinsically safe apparatus with associated apparatus not specifically examined in combination as a system when the approved values of V_{oc} and I_{sc} or V_t and I_t of the associated apparatus are less than or equal to V_{max} and I_{max} of the intrinsically safe apparatus and the approved values of C_a and L_a of the associated apparatus are greater than C_i + C_{cable} and L_i + L_{cable} respectively for the intrinsically safe apparatus.

② Simple apparatus is defined as a device which neither generates nor stores more than 1.2V, 0.1A, 20μJ, or 25mW.

③ Wiring methods must be in accordance with the National Electric Code, ANSI/NFPA 70, Article 504 and 505 or the Canadian Electric Code CSA C22.1, Part 1, Appendix F. For additional information refer to ANSI/ISA RP12.6.

④ This module, 1797-OB4D, must be used with terminal base 1797-TB3 or 1797-TB3S.

⑤ Terminals 2, 3, 6, 7, 10, 11, 14, 15, 17-32, 36-39, and 46-49 shall not be connected.

⑥ WARNING: Substitution of components may impair intrinsic safety. AVERTISSEMENT: La substitution de composant peut compromettre la securite intrinseque.

⑦ The ambient operating temperature (T_{amb}) for this product is -20°C to 70°C.

⑧ Suitable for Class II, Division1, Groups E, F, G and Class III when mounted in a UL listed Type 4, 4X, 6, 6P, 9, 12, or 12K enclosure.

Notes:

1797-IE8 FLEX Ex 8 Input Analog Module

General Information

Modules must be used with a 1797-TB3 or -TB3S intrinsically safe terminal base unit.

Module Installation

Rotate keyswitch on terminal base unit clockwise to position 3 as required for this type of module. **Do not change the position of the keyswitch after wiring the terminal base unit.**

Inputs

Each input can be operated from an analog field device signal. **Do not apply any non-intrinsically safe signals to this module.**

The channels in this module are electrically connected to each other and have a common plus-line.

IMPORTANT When interconnecting several lines, you must consider the total accumulated power and check for intrinsic safety.

Wiring to a 1797-TB3 or -TB3S Terminal Base Unit

Connect wiring to the terminal base as shown below.

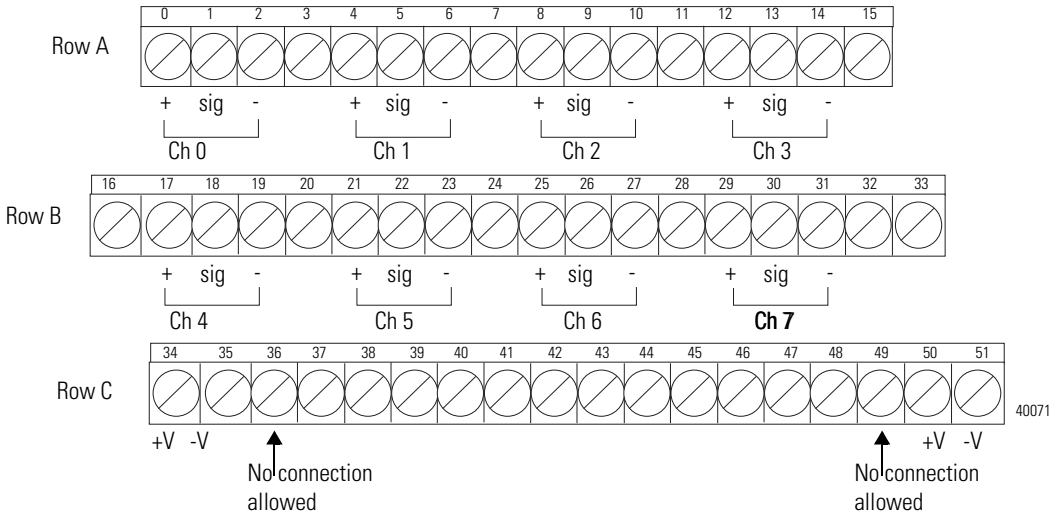

ATTENTION

Do not use any unused terminals on this terminal base unit. Using these terminals as supporting terminals can result in damage to the module and/or unintended operation of your system.

Intrinsically Safe Specifications

For a full list of specifications, refer to FLEX Ex 8 Input Analog Module Installation Instructions, publication 1797-5.5.

Operating Temperature	-20 to +70°C (-4 to +158°F)
Agency Certification	Class I Division 1 Groups A-D T4 Class I Zone 1 AEx ib[ia] IIC T4 ®Class II Division 1 Groups E, F, G; Class III
Certificates	UL Certificate Number 99.19699 c UL us

UL, C-UL I/O Entity Parameters

Wiring Methods

- Wiring method 1 - Each channel is wired separately.
- Wiring method 2 - Multiple channels in one cable, providing each channel is separated in accordance with the National Electric Code (NEC) or Canadian Electric Code (CEC).

Table 1: Entity Values for Field Device Connections

Wiring Method	Channel	Terminals	V_{oc} (V)	I_{sc} (mA)	V_t (V)	I_t (mA)	Groups	C_a (μF)	L_a (mH)
1 and 2	Any one channel e.g. ch0	0(+), 1(sig)	23.7	92.5	-	-	A, B, IIC	0.06	2.0
							C, E, IIB	0.18	8.0
							D, F, G, IIA	0.48	16.0
		1(sig), 2(-)	5	1.0	-	-	A, B, IIC	100	1000
							C, E, IIB	300	1000
							D, F, G, IIA	800	1000
		0(+), 1(sig), 2(-)	-	-	23.7	93.5	A, B, IIC	0.06	2.0
							C, E, IIB	0.18	8.0
							D, F, G, IIA	0.48	16.0

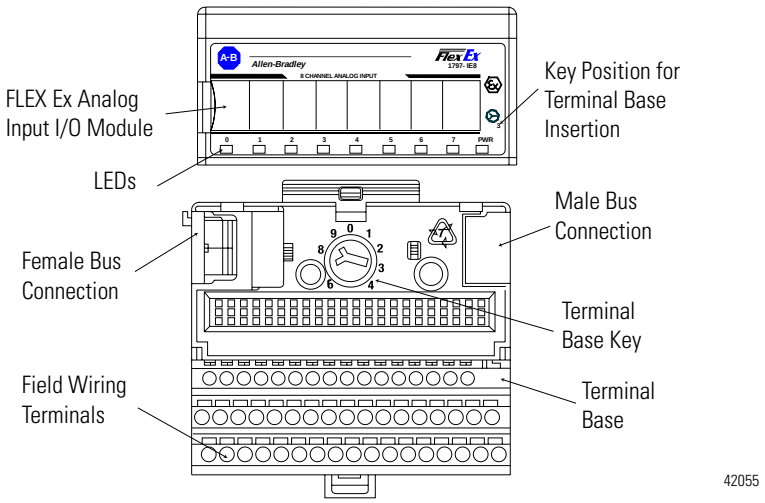

IMPORTANT A terminal base may or may not have an I/O module installed.

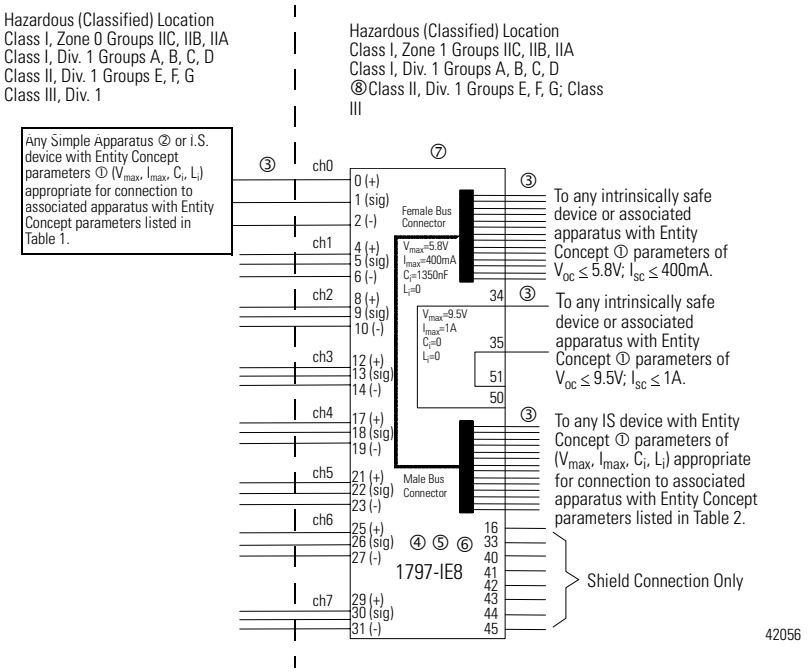

Table 2: Flexbus Entity Values Which are Allowed for the Next FLEX Ex I/O Module

Terminals	V_t (V)	I_t (mA)	Groups	C_a (μF)	L_a (μH)
Male Bus Connector	5.8	400	A-G IIC, IIB, IIA	3.0	3.0

Table 3: Flexbus Entity Values for this Module

Note: Any combination of up to eight FLEX Ex I/O modules may be attached on a flexbus.

Terminals	V_{max} (V)	I_{max} (mA)	Groups	C_i (μF)	L_i (μH)
Female Bus Connector	5.8	400	A-G IIC, IIB, IIA	1.35	0

① The entity concept allows interconnection of intrinsically safe apparatus with associated apparatus not specifically examined in combination as a system when the approved values of V_{oc} and I_{sc} or V_t and I_t of the associated apparatus are less than or equal to V_{max} and I_{max} of the intrinsically safe apparatus and the approved values of C_a and L_a of the associated apparatus are greater than C_i + C_{cable} and L_i + L_{cable} respectively for the intrinsically safe apparatus.

② Simple apparatus is defined as a device which neither generates nor stores more than 1.2V, 0.1A, 20μJ, or 25mW.

③ Wiring methods must be in accordance with the National Electric Code, ANSI/NFPA 70, Article 504 and 505 or the Canadian Electric Code CSA C22.1, Part 1, Appendix F. For additional information refer to ANSI/ISA RP12.6.

④ This module, 1797-IE8, must be used with terminal base 1797-TB3 or 1797-TB3S.

⑤ Terminals 3, 7, 11, 15, 20, 24, 28, 32, 36-39, and 46-49 shall not be connected.

⑥ WARNING: Substitution of components may impair intrinsic safety. AVERTISSEMENT: La substitution de composant peut compromettre la securite intrinseque.

⑦ The ambient operating temperature (T_{amb}) for this product is -20°C to 70°C.

⑧ Suitable for Class II, Division1, Groups E, F, G and Class III when mounted in a UL listed Type 4, 4X, 6, 6P, 9, 12, or 12K enclosure.

Notes:

1797-IE8H FLEX Ex 8 Input HART Analog Module

General Information

Modules must be used with a 1797-TB3 or -TB3S intrinsically safe terminal base unit.

Module Installation

Rotate keyswitch on terminal base unit clockwise to position 3 as required for this type of module. **Do not change the position of the keyswitch after wiring the terminal base unit.**

Inputs

Each input can be operated from an analog field device signal. **Do not apply any non-intrinsically safe signals to this module.**

The channels in this module are electrically connected to each other and have a common plus-line.

IMPORTANT When interconnecting several lines, you must consider the total accumulated power and check for intrinsic safety.

Wiring to a 1797-TB3 or -TB3S Terminal Base Unit

Connect wiring to the terminal base as shown below.

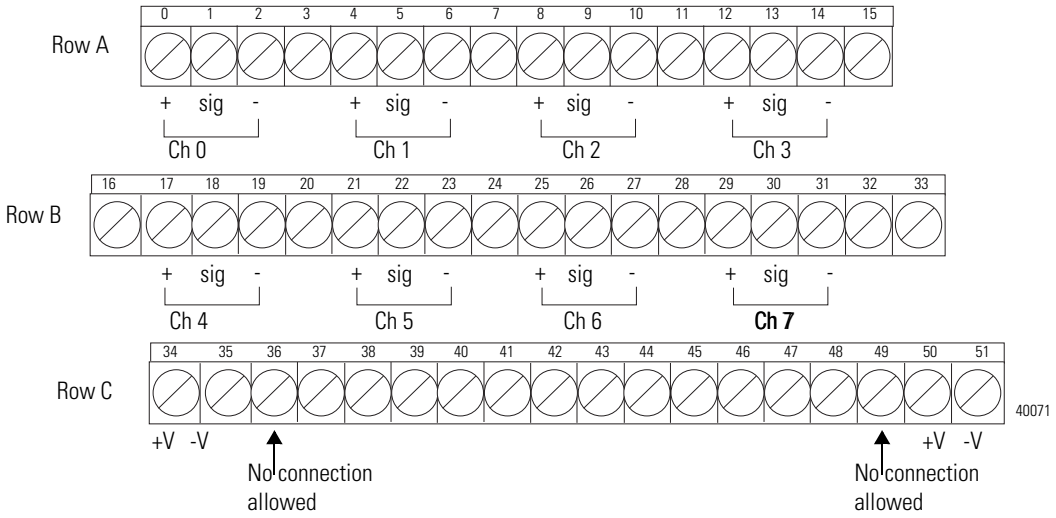

ATTENTION

Do not use any unused terminals on this terminal base unit. Using these terminals as supporting terminals can result in damage to the module and/or unintended operation of your system.

Intrinsically Safe Specifications

For a full list of specifications, refer to FLEX Ex 8 Input Analog Module with Noise Filter Installation Instructions, publication 1797-5.31.

Operating Temperature	-20 to +70°C (-4 to +158°F)
Agency Certification	Class I Division 1 Groups A-D T4 Class I Zone 1 AEx ib[ia] IIC T4 ®Class II Division 1 Groups E, F, G; Class III
Certificates	UL Certificate Number 99.19699 c UL us

UL, C-UL I/O Entity Parameters

Wiring Methods

- Wiring method 1 - Each channel is wired separately.
- Wiring method 2 - Multiple channels in one cable, providing each channel is separated in accordance with the National Electric Code (NEC) or Canadian Electric Code (CEC).

Table 1: Entity Values for Field Device Connections

Wiring Method	Channel	Terminals	V_{oc} (V)	I_{sc} (mA)	V_t (V)	I_t (mA)	Groups	C_a (μF)	L_a (mH)
1 and 2	Any one channel e.g. ch0	0(+), 1(sig)	23.7	92.5	-	-	A, B, IIC	0.06	2.0
							C, E, IIB	0.18	8.0
							D, F, G, IIA	0.48	16.0
		1(sig), 2(-)	5	1.0	-	-	A, B, IIC	100	1000
							C, E, IIB	300	1000
							D, F, G, IIA	800	1000
		0(+), 1(sig), 2(-)	-	-	23.7	93.5	A, B, IIC	0.06	2.0
							C, E, IIB	0.18	8.0
							D, F, G, IIA	0.48	16.0

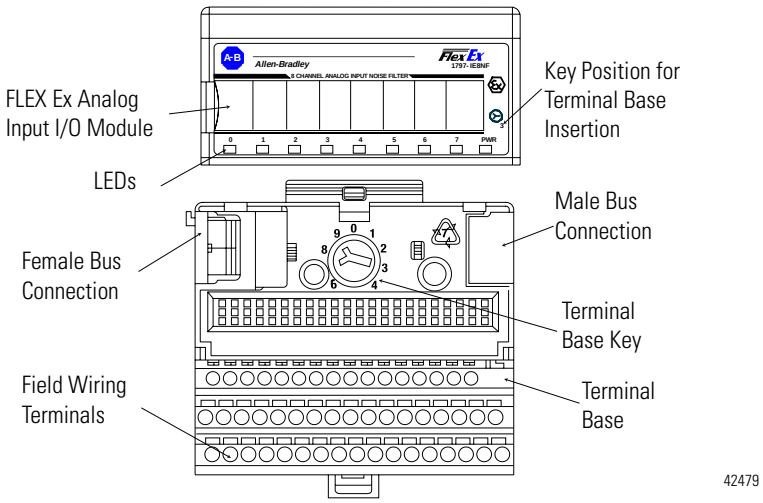

IMPORTANT A terminal base may or may not have an I/O module installed.

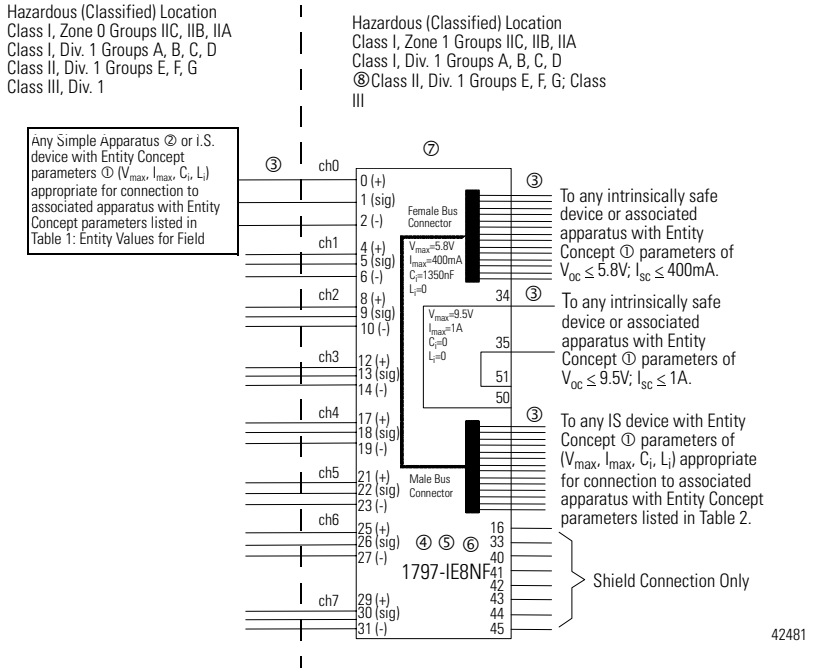

Table 2: Flexbus Entity Values Which are Allowed for the Next FLEX Ex I/O Module

Terminals	V_t (V)	I_t (mA)	Groups	C_a (μF)	L_a (μH)
Male Bus Connector	5.8	400	A-G IIC, IIB, IIA	3.0	3.0

Table 3: Flexbus Entity Values for this Module

Note: Any combination of up to eight FLEX Ex I/O modules may be attached on a flexbus.

Terminals	V_{max} (V)	I_{max} (mA)	Groups	C_i (μF)	L_i (μH)
Female Bus Connector	5.8	400	A-G IIC, IIB, IIA	1.35	0

① The entity concept allows interconnection of intrinsically safe apparatus with associated apparatus not specifically examined in combination as a system when the approved values of V_{oc} and I_{sc} or V_t and I_t of the associated apparatus are less than or equal to V_{max} and I_{max} of the intrinsically safe apparatus and the approved values of C_a and L_a of the associated apparatus are greater than C_i + C_{cable} and L_i + L_{cable} respectively for the intrinsically safe apparatus.

② Simple apparatus is defined as a device which neither generates nor stores more than 1.2V, 0.1A, 20μJ, or 25mW.

③ Wiring methods must be in accordance with the National Electric Code, ANSI/NFPA 70, Article 504 and 505 or the Canadian Electric Code CSA C22.1, Part 1, Appendix F. For additional information refer to ANSI/ISA RP12.6.

④ This module, 1797-IE8NF, must be used with terminal base 1797-TB3 or 1797-TB3S.

⑤ Terminals 3, 7, 11, 15, 20, 24, 28, 32, 36-39, and 46-49 shall not be connected.

⑥ WARNING: Substitution of components may impair intrinsic safety. AVERTISSEMENT: La substitution de composant peut compromettre la securite intrinseque.

⑦ The ambient operating temperature (T_{amb}) for this product is -20°C to 70°C.

⑧ Suitable for Class II, Division1, Groups E, F, G and Class III when mounted in a UL listed Type 4, 4X, 6, 6P, 9, 12, or 12K enclosure.

Notes:

1797-IE8NF FLEX Ex 8 Input Analog Module with Noise Filter

General Information

Modules must be used with a 1797-TB3 or -TB3S intrinsically safe terminal base unit.

Module Installation

Rotate keyswitch on terminal base unit clockwise to position 3 as required for this type of module. **Do not change the position of the keyswitch after wiring the terminal base unit.**

Inputs

Each input can be operated from an analog field device signal. **Do not apply any non-intrinsically safe signals to this module.**

The channels in this module are electrically connected to each other and have a common plus-line.

IMPORTANT When interconnecting several lines, you must consider the total accumulated power and check for intrinsic safety.

Wiring to a 1797-TB3 or -TB3S Terminal Base Unit

Connect wiring to the terminal base as shown below.

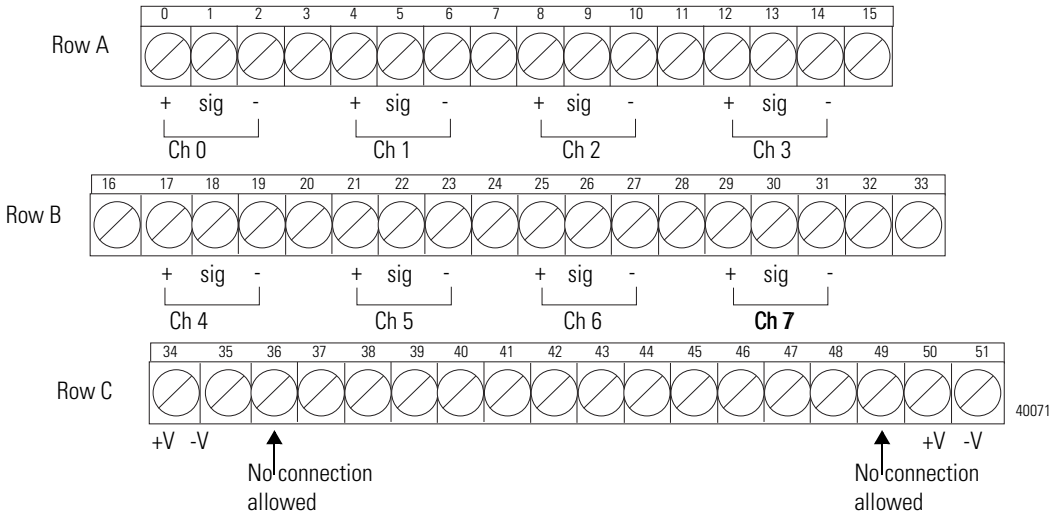

ATTENTION

Do not use any unused terminals on this terminal base unit. Using these terminals as supporting terminals can result in damage to the module and/or unintended operation of your system.

Intrinsically Safe Specifications

For a full list of specifications, refer to FLEX Ex 8 Input Analog Module with Noise Filter Installation Instructions, publication 1797-5.31.

Operating Temperature	-20 to +70°C (-4 to +158°F)
Agency Certification	Class I Division 1 Groups A-D T4 Class I Zone 1 AEx ib[ia] IIC T4 ®Class II Division 1 Groups E, F, G; Class III
Certificates	UL Certificate Number 99.19699 c UL us

UL, C-UL I/O Entity Parameters

Wiring Methods

- Wiring method 1 - Each channel is wired separately.
- Wiring method 2 - Multiple channels in one cable, providing each channel is separated in accordance with the National Electric Code (NEC) or Canadian Electric Code (CEC).

Table 1: Entity Values for Field Device Connections

Wiring Method	Channel	Terminals	V_{oc} (V)	I_{sc} (mA)	V_t (V)	I_t (mA)	Groups	C_a (μF)	L_a (mH)
1 and 2	Any one channel e.g. ch0	0(+), 1(sig)	23.7	92.5	-	-	A, B, IIC	0.06	2.0
							C, E, IIB	0.18	8.0
							D, F, G, IIA	0.48	16.0
		1(sig), 2(-)	5	1.0	-	-	A, B, IIC	100	1000
							C, E, IIB	300	1000
							D, F, G, IIA	800	1000
		0(+), 1(sig), 2(-)	-	-	23.7	93.5	A, B, IIC	0.06	2.0
							C, E, IIB	0.18	8.0
							D, F, G, IIA	0.48	16.0

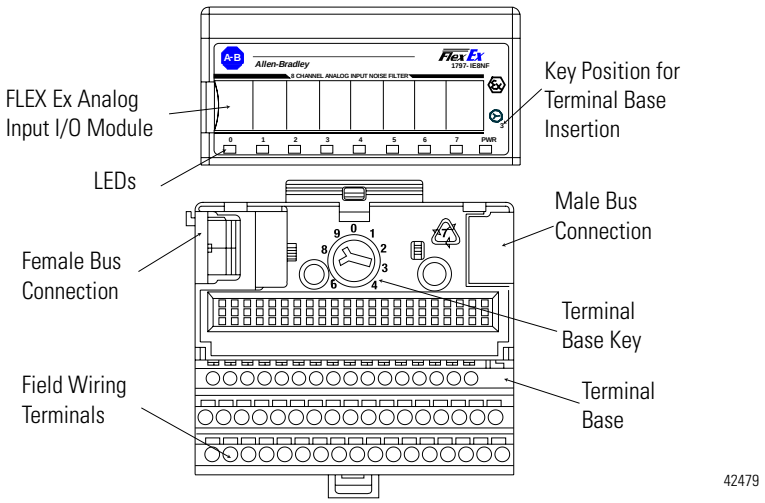

IMPORTANT A terminal base may or may not have an I/O module installed.

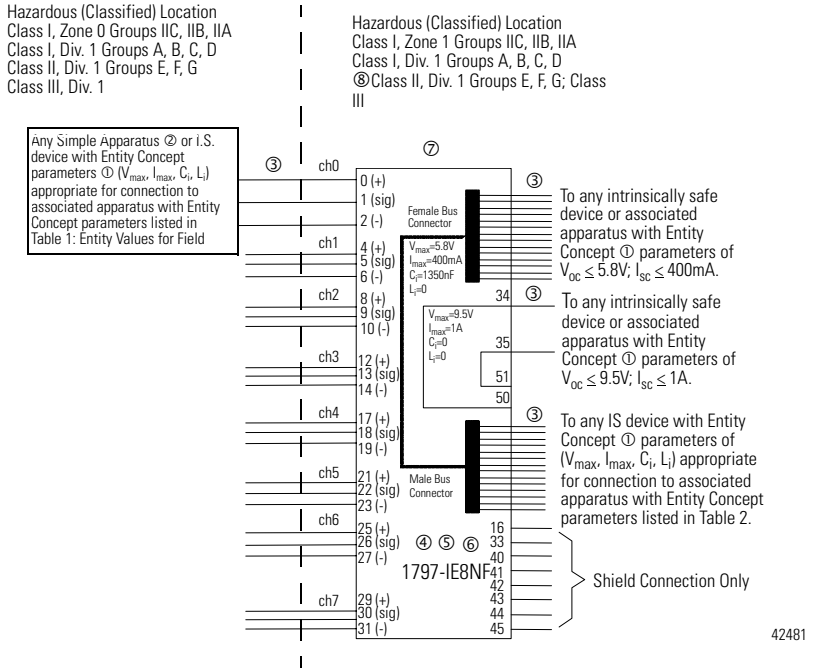

Table 2: Flexbus Entity Values Which are Allowed for the Next FLEX Ex I/O Module

Terminals	V_t (V)	I_t (mA)	Groups	C_a (μF)	L_a (μH)
Male Bus Connector	5.8	400	A-G IIC, IIB, IIA	3.0	3.0

Table 3: Flexbus Entity Values for this Module

Note: Any combination of up to eight FLEX Ex I/O modules may be attached on a flexbus.

Terminals	V_{max} (V)	I_{max} (mA)	Groups	C_i (μF)	L_i (μH)
Female Bus Connector	5.8	400	A-G IIC, IIB, IIA	1.35	0

① The entity concept allows interconnection of intrinsically safe apparatus with associated apparatus not specifically examined in combination as a system when the approved values of V_{oc} and I_{sc} or V_t and I_t of the associated apparatus are less than or equal to V_{max} and I_{max} of the intrinsically safe apparatus and the approved values of C_a and L_a of the associated apparatus are greater than C_i + C_{cable} and L_i + L_{cable} respectively for the intrinsically safe apparatus.

② Simple apparatus is defined as a device which neither generates nor stores more than 1.2V, 0.1A, 20μJ, or 25mW.

③ Wiring methods must be in accordance with the National Electric Code, ANSI/NFPA 70, Article 504 and 505 or the Canadian Electric Code CSA C22.1, Part 1, Appendix F. For additional information refer to ANSI/ISA RP12.6.

④ This module, 1797-IE8NF, must be used with terminal base 1797-TB3 or 1797-TB3S.

⑤ Terminals 3, 7, 11, 15, 20, 24, 28, 32, 36-39, and 46-49 shall not be connected.

⑥ WARNING: Substitution of components may impair intrinsic safety. AVERTISSEMENT: La substitution de composant peut compromettre la securite intrinseque.

⑦ The ambient operating temperature (T_{amb}) for this product is -20°C to 70°C.

⑧ Suitable for Class II, Division1, Groups E, F, G and Class III when mounted in a UL listed Type 4, 4X, 6, 6P, 9, 12, or 12K enclosure.

Notes:

1797-OE8 FLEX Ex 8 Output Analog Module

General Information

Modules must be used with a 1797-TB3 or -TB3S intrinsically safe terminal base unit.

Module Installation

Rotate keyswitch on terminal base unit clockwise to position 4 as required for this type of module. **Do not change the position of the keyswitch after wiring the terminal base unit.**

Outputs

Each output channel can operate an analog field device. **Do not apply any non-intrinsically safe signals to this module.**

The channels in this module are electrically connected to each other.

Wiring to a 1797-TB3 or -TB3S Terminal Base Unit

Connect wiring to the terminal base as shown below.

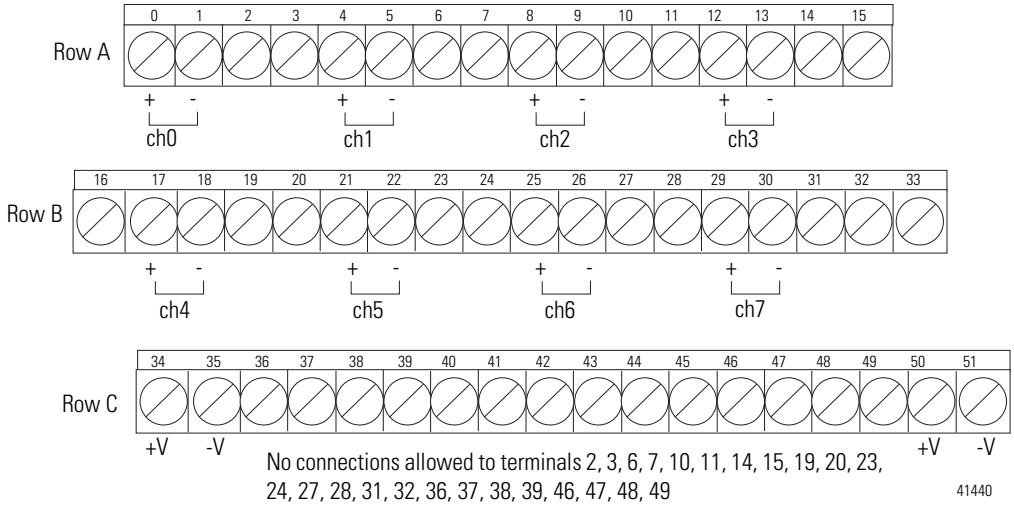

ATTENTION

Do not use any unused terminals on this terminal base unit. Using these terminals as supporting terminals can result in damage to the module and/or unintended operation of your system.

Intrinsically Safe Specifications

For a full list of specifications, refer to FLEX Ex 8 Output Analog Module Installation Instructions, publication 1797-5.3.

Operating Temperature	-20 to +70°C (-4 to +158°F)
Agency Certification	Class I Division 1 Groups A-D T4 Class I Zone 1 AEx ib[ia] IIC T4 ®Class II Division 1 Groups E, F, G; Class III
Certificates	UL Certificate Number 99.19699 C UL US

UL, C-UL I/O Entity Parameters

Wiring Methods

- Wiring method 1 - Each channel is wired separately.
- Wiring method 2 - Multiple channels in one cable, providing each channel is separated in accordance with the National Electric Code (NEC) or Canadian Electric Code (CEC).

Table 1: Entity Values for Field Device Connections

Wiring Method	Channel	Terminals	V_{oc} (V)	I_{sc} (mA)	V_t (V)	I_t (mA)	Groups	C_a (μF)	L_a (mH)
1 and 2	Any one channel e.g. ch0	0(+), 1(-)	21.0	100.0	-	-	A, B, IIC	0.08	2.0
							C, E, IIB	0.24	8.0
							D, F, G, IIA	0.64	16.0

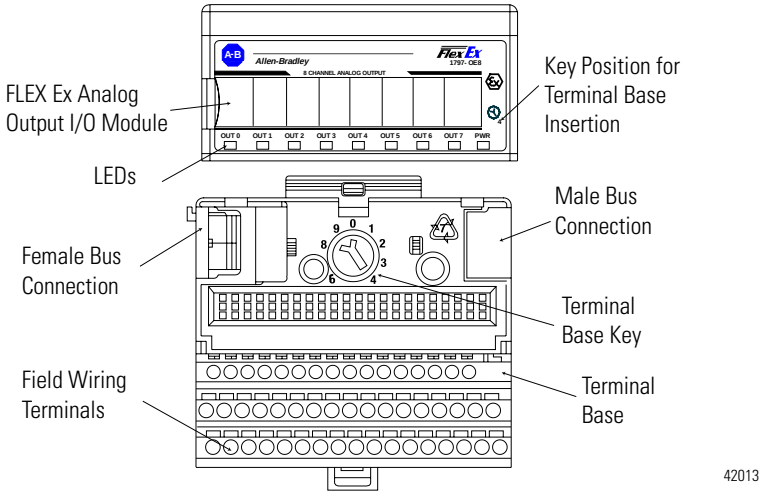

IMPORTANT A terminal base may or may not have an I/O module installed.

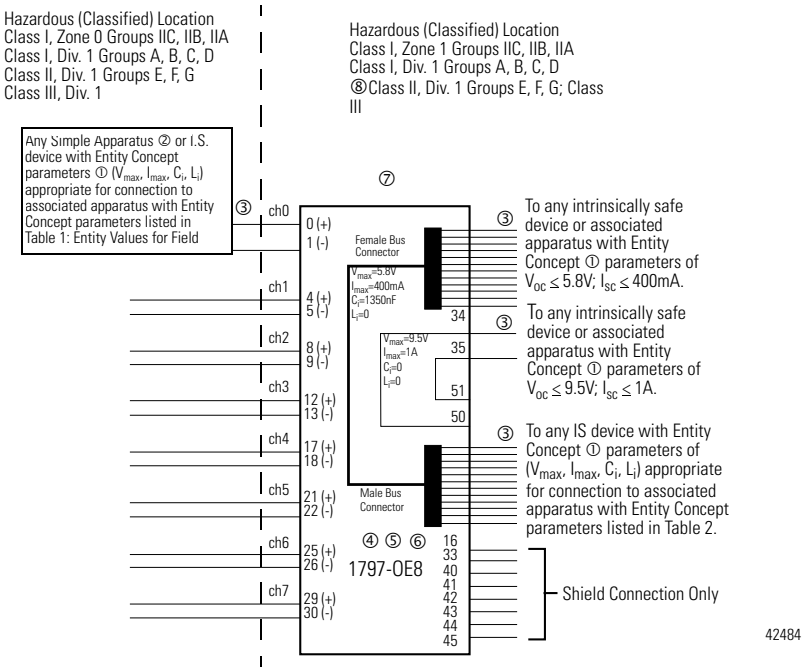

Table 2: Flexbus Entity Values Which are Allowed for the Next FLEX Ex I/O Module

Terminals	V_t (V)	I_t (mA)	Groups	C_a (μF)	L_a (μH)
Male Bus Connector	5.8	400	A-G IIC, IIB, IIA	3.0	3.0

Table 3: Flexbus Entity Values for this Module

Note: Any combination of up to eight FLEX Ex I/O modules may be attached on a flexbus.

Terminals	V_{max} (V)	I_{max} (mA)	Groups	C_i (μF)	L_i (μH)
Female Bus Connector	5.8	400	A-G IIC, IIB, IIA	1.35	0

① The entity concept allows interconnection of intrinsically safe apparatus with associated apparatus not specifically examined in combination as a system when the approved values of V_{oc} and I_{sc} or V_t and I_t of the associated apparatus are less than or equal to V_{max} and I_{max} of the intrinsically safe apparatus and the approved values of C_a and L_a of the associated apparatus are greater than C_i + C_{cable} and L_i + L_{cable} respectively for the intrinsically safe apparatus.

② Simple apparatus is defined as a device which neither generates nor stores more than 1.2V, 0.1A, 20μJ, or 25mW.

③ Wiring methods must be in accordance with the National Electric Code, ANSI/NFPA 70, Article 504 and 505 or the Canadian Electric Code CSA C22.1, Part 1, Appendix F. For additional information refer to ANSI/ISA RP12.6.

④ This module, 1797-IE8, must be used with terminal base 1797-TB3 or 1797-TB3S.

⑤ Terminals 2, 3, 6, 7, 10, 11, 14, 15, 19, 20, 23, 24, 27, 28, 31, 32, 36-39, and 46-49 shall not be connected.

⑥ WARNING: Substitution of components may impair intrinsic safety. AVERTISSEMENT: La substitution de composant peut compromettre la securite intrinseque.

⑦ The ambient operating temperature (T_{amb}) for this product is -20°C to 70°C.

⑧ Suitable for Class II, Division1, Groups E, F, G and Class III when mounted in a UL listed Type 4, 4X, 6, 6P, 9, 12, or 12K enclosure.

1797-OE8H FLEX Ex 8 Output HART Analog Module

General Information

Modules must be used with a 1797-TB3 or -TB3S intrinsically safe terminal base unit.

Module Installation

Rotate keyswitch on terminal base unit clockwise to position 4 as required for this type of module. **Do not change the position of the keyswitch after wiring the terminal base unit.**

Outputs

Each output channel can operate an analog field device. **Do not apply any non-intrinsically safe signals to this module.**

The channels in this module are electrically connected to each other.

Wiring to a 1797-TB3 or -TB3S Terminal Base Unit

Connect wiring to the terminal base as shown below.

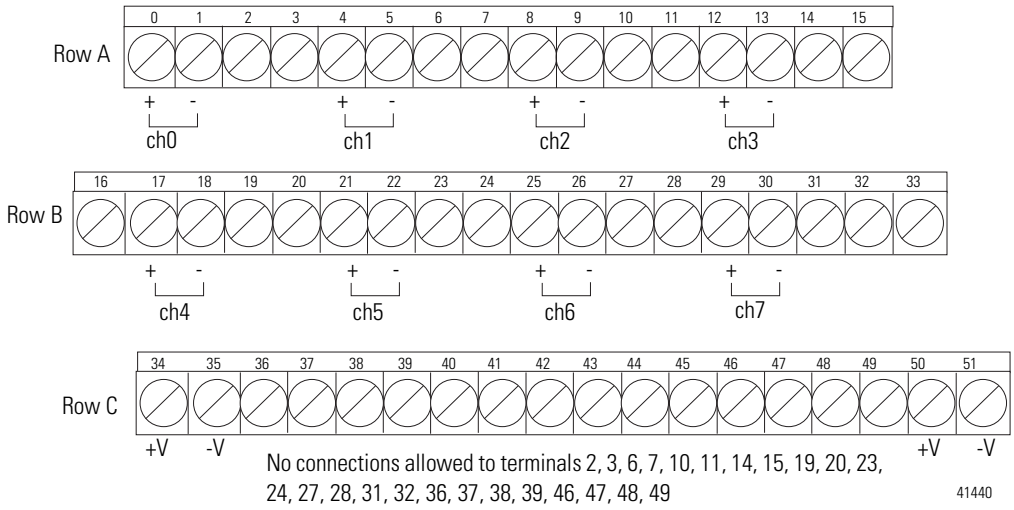

ATTENTION

Do not use any unused terminals on this terminal base unit. Using these terminals as supporting terminals can result in damage to the module and/or unintended operation of your system.

Intrinsically Safe Specifications

For a full list of specifications, refer to FLEX Ex 8 Output Analog Module Installation Instructions, publication 1797-5.3.

Operating Temperature	-20 to +70°C (-4 to +158°F)
Agency Certification	Class I Division 1 Groups A-D T4 Class I Zone 1 AEx ib[ia] IIC T4 ®Class II Division 1 Groups E, F, G; Class III
Certificates	UL Certificate Number 99.19699 c UL us

UL, C-UL I/O Entity Parameters

Wiring Methods

- Wiring method 1 - Each channel is wired separately.
- Wiring method 2 - Multiple channels in one cable, providing each channel is separated in accordance with the National Electric Code (NEC) or Canadian Electric Code (CEC).

Table 1: Entity Values for Field Device Connections

Wiring Method	Channel	Terminals	V_{oc} (V)	I_{sc} (mA)	V_t (V)	I_t (mA)	Groups	C_a (μF)	L_a (mH)
1 and 2	Any one channel e.g. ch0	0(+), 1(-)	21.0	100.0	-	-	A, B, IIC	0.08	2.0
							C, E, IIB	0.24	8.0
							D, F, G, IIA	0.64	16.0

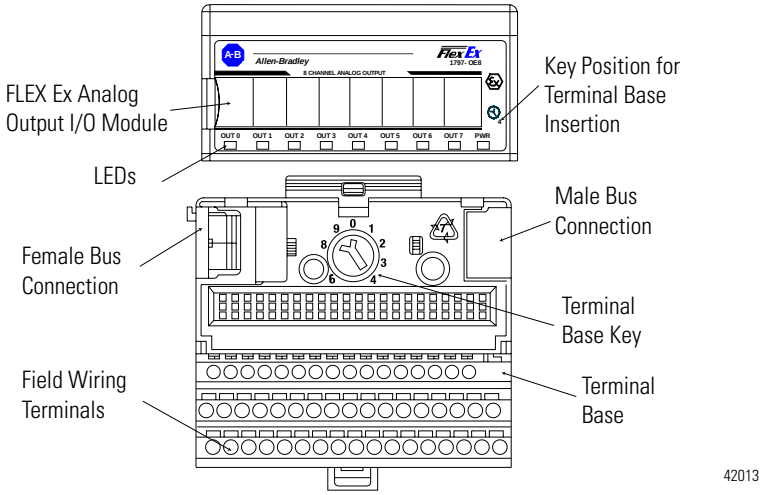

IMPORTANT A terminal base may or may not have an I/O module installed.

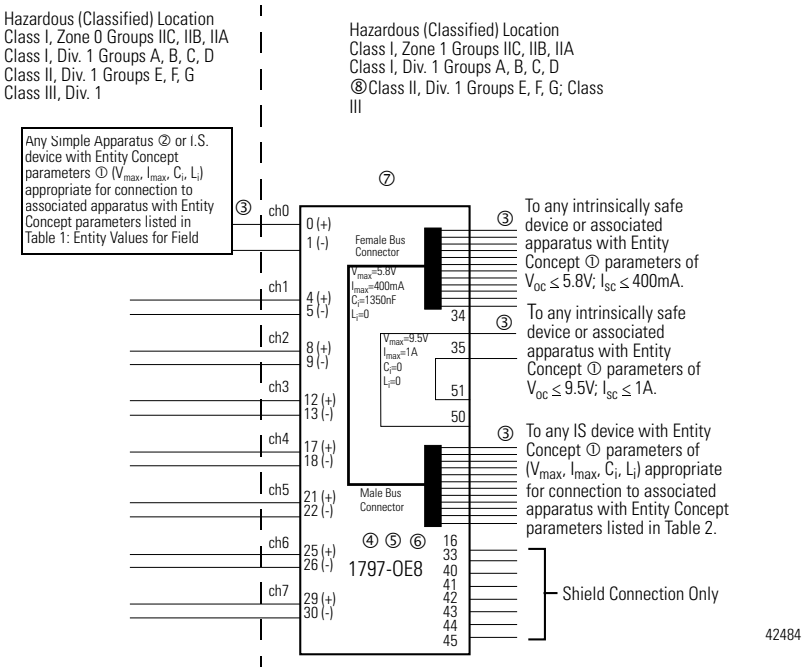

Table 2: Flexbus Entity Values Which are Allowed for the Next FLEX Ex I/O Module

Terminals	V_t (V)	I_t (mA)	Groups	C_a (μF)	L_a (μH)
Male Bus Connector	5.8	400	A-G IIC, IIB, IIA	3.0	3.0

Table 3: Flexbus Entity Values for this Module

Note: Any combination of up to eight FLEX Ex I/O modules may be attached on a flexbus.

Terminals	V_{max} (V)	I_{max} (mA)	Groups	C_i (μF)	L_i (μH)
Female Bus Connector	5.8	400	A-G IIC, IIB, IIA	1.35	0

① The entity concept allows interconnection of intrinsically safe apparatus with associated apparatus not specifically examined in combination as a system when the approved values of V_{oc} and I_{sc} or V_t and I_t of the associated apparatus are less than or equal to V_{max} and I_{max} of the intrinsically safe apparatus and the approved values of C_a and L_a of the associated apparatus are greater than C_i + C_{cable} and L_i + L_{cable} respectively for the intrinsically safe apparatus.

② Simple apparatus is defined as a device which neither generates nor stores more than 1.2V, 0.1A, 20μJ, or 25mW.

③ Wiring methods must be in accordance with the National Electric Code, ANSI/NFPA 70, Article 504 and 505 or the Canadian Electric Code CSA C22.1, Part 1, Appendix F. For additional information refer to ANSI/ISA RP12.6.

④ This module, 1797-IE8, must be used with terminal base 1797-TB3 or 1797-TB3S.

⑤ Terminals 2, 3, 6, 7, 10, 11, 14, 15, 19, 20, 23, 24, 27, 28, 31, 32, 36-39, and 46-49 shall not be connected.

⑥ WARNING: Substitution of components may impair intrinsic safety. AVERTISSEMENT: La substitution de composant peut compromettre la securite intrinseque.

⑦ The ambient operating temperature (T_{amb}) for this product is -20°C to 70°C.

⑧ Suitable for Class II, Division1, Groups E, F, G and Class III when mounted in a UL listed Type 4, 4X, 6, 6P, 9, 12, or 12K enclosure.

1797-IRT8 FLEX Ex Thermocouple/RTD Input Module

General Information

Modules must be used with a 1797-TB3 or -TB3S intrinsically safe terminal base unit.

Module Installation

Rotate keyswitch on terminal base unit clockwise to position 2 as required for this type of module. **Do not change the position of the keyswitch after wiring the terminal base unit.**

Inputs

Each input can be operated from a thermocouple (TC) or resistance temperature detector (RTD). **Do not apply any non-intrinsically safe signals to this module.**

The channels in this module are electrically connected to each other and have a common plus-line.

IMPORTANT When interconnecting several lines, you must consider the total accumulated power and check for intrinsic safety.

Wiring to a 1797-TB3 or -TB3S Terminal Base Unit

Connect wiring to the terminal base as shown below.

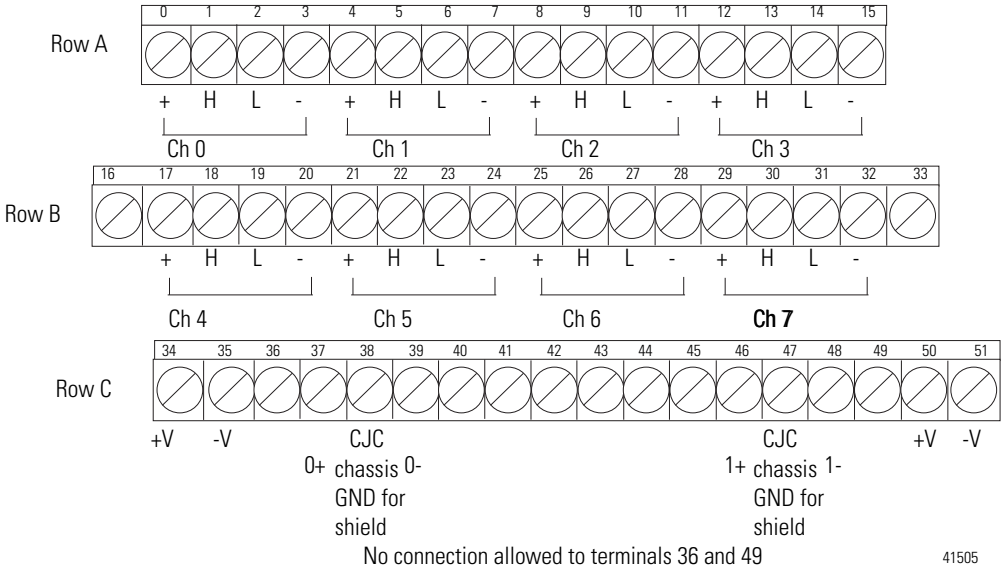

ATTENTION

Do not use any unused terminals on this terminal base unit. Using these terminals as supporting terminals can result in damage to the module and/or unintended operation of your system.

Intrinsically Safe Specifications

For a full list of specifications, refer to FLEX Ex Thermocouple/RTD Input Module Installation Instructions, publication 1797-5.4.

Operational Temperature	-20 to +70°C (-4 to 158°F)
Agency Certification	Class I Division 1 Groups A-D T4 Class I Zone 1 AEx ib[ia] IIC T4 ®Class II Division 1 Groups E, F, G; Class III
Certificates	UL Certificate Number 99.19699 c UL us

UL, C-UL I/O Entity Parameters

Wiring Methods

- Wiring method 1 - Each channel is wired separately.
- Wiring method 2 - Multiple channels in one cable, providing each channel is separated in accordance with the National Electric Code (NEC) or Canadian Electric Code (CEC).

Table 1: Entity Values for Field Device Connections

Wiring Method	Channel	Terminals	V_{oc} (V)	I_{sc} (mA)	V_t (V)	I_t (mA)	Groups	C_a (μF)	L_a (mH)
1 and 2	Any one channel e.g. ch0	0(+), 1(H), 2(L), 3(-)	9.0	37.0	-	-	A, B, IIC	4.9	20.0
							C, E, IIB	14.7	80.0
							D, F, G, IIA	39.2	160.0
		37, 38, 39 (CJC0) or 46, 47, 48 (CJC1)	9.0	1.0	-	-	A, B, IIC	4.9	1000.0
							C, E, IIB	14.7	1000.0
							D, F, G, IIA	39.2	1000.0
		0(+), 1(H), 2(L), 3(-) 37, 38, 39 (CJC0) or 46, 47, 48 (CJC1)	-	-	9.0	38.0	A, B, IIC	4.9	20.0
							C, E, IIB	14.7	80.0
							D, F, G, IIA	39.2	160.0

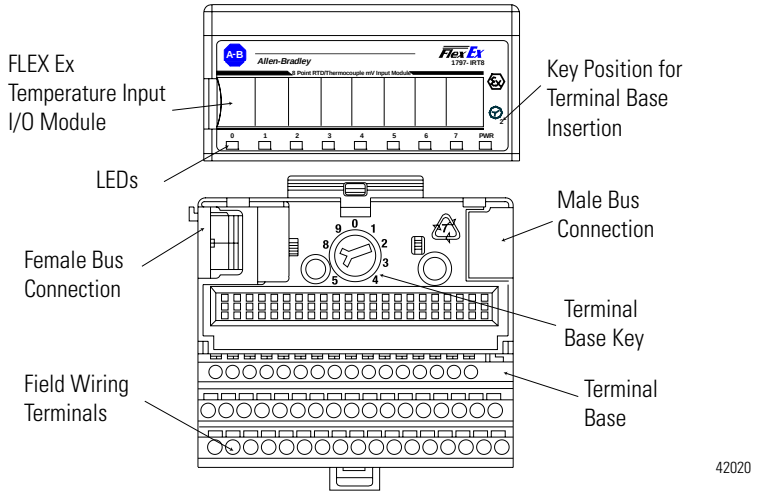

IMPORTANT A terminal base may or may not have an I/O module installed.

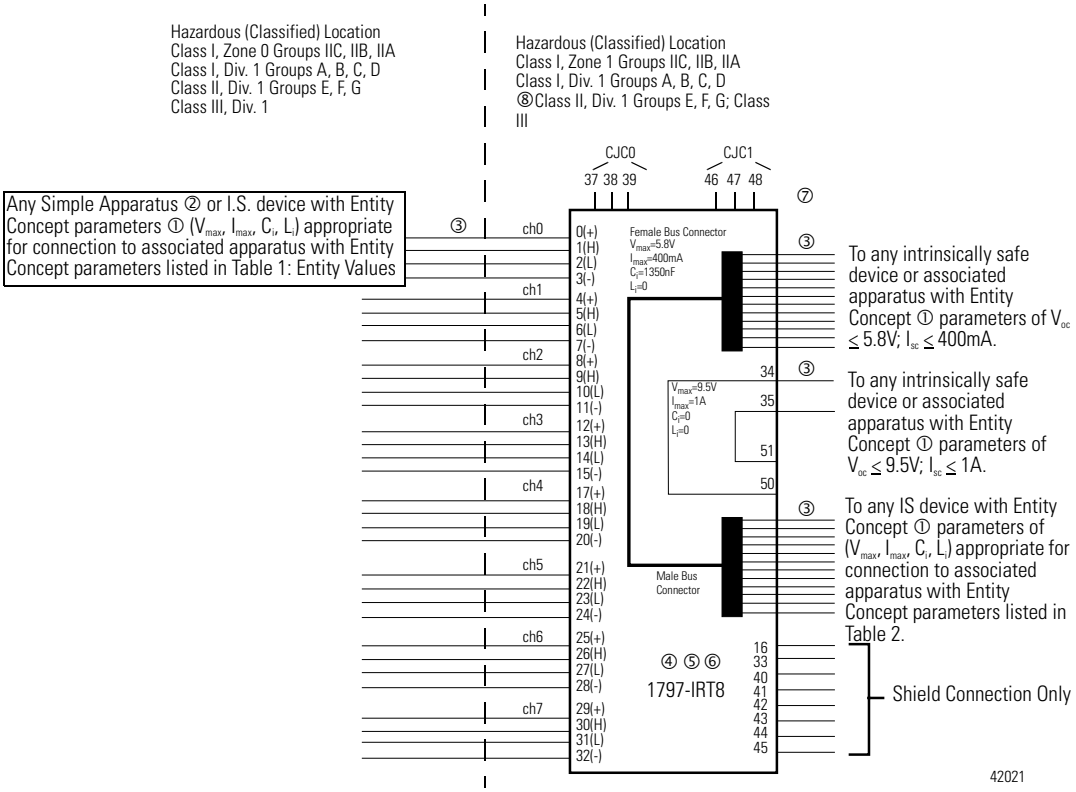

Table 2: Flexbus Entity Values Which are Allowed for the Next FLEX Ex I/O Module

Terminals	V_t (V)	I_t (mA)	Groups	C_a (μF)	L_a (μH)
Male Bus Connector	5.8	400	A-G IIC, IIB, IIA	3.0	3.0

Table 3: Flexbus Entity Values for this Module

Note: Any combination of up to eight FLEX Ex I/O modules may be attached on a flexbus.

Terminals	V_{max} (V)	I_{max} (mA)	Groups	C_i (μF)	L_i (μH)
Female Bus Connector	5.8	400	A-G IIC, IIB, IIA	1.35	0

① The entity concept allows interconnection of intrinsically safe apparatus with associated apparatus not specifically examined in combination as a system when the approved values of V_{oc} and I_{sc} or V_t and I_t of the associated apparatus are less than or equal to V_{max} and I_{max} of the intrinsically safe apparatus and the approved values of C_a and L_a of the associated apparatus are greater than C_i + C_{cable} and L_i + L_{cable} respectively for the intrinsically safe apparatus.

② Simple apparatus is defined as a device which neither generates nor stores more than 1.2V, 0.1A, 20μJ, or 25mW.

③ Wiring methods must be in accordance with the National Electric Code, ANSI/NFPA 70, Article 504 and 505 or the Canadian Electric Code CSA C22.1, Part 1, Appendix F. For additional information refer to ANSI/ISA RP12.6.

④ This module, 1797-IRT8, must be used with terminal base 1797-TB3 or 1797-TB3S.

⑤ Terminals 36 and 49 shall not be connected.

⑥ WARNING: Substitution of components may impair intrinsic safety. AVERTISSEMENT: La substitution de composant peut compromettre la securite intrinseque.

⑦ The ambient operating temperature (T_{amb}) for this product is -20°C to 70°C.

⑧ Suitable for Class II, Division1, Groups E, F, G and Class III when mounted in a UL listed Type 4, 4X, 6, 6P, 9, 12, or 12K enclosure.

Notes:

1797-IJ2 FLEX Ex Frequency Input Module

General Information

Modules must be used with a 1797-TB3 or -TB3S intrinsically safe terminal base unit.

Module Installation

Rotate keyswitch on terminal base unit clockwise to position 1 as required for this type of module. **Do not change the position of the keyswitch after wiring the terminal base unit.**

Inputs

The frequency input module has 2 input channels. Each input can accept inputs from magnetic pickups or proximity probes. Each input channel has 2 input selections: frequency input or gate input. **Do not apply any non-intrinsically safe signals to this module.**

The channels in this module are electrically connected to each other.

IMPORTANT When interconnecting several lines, you must consider the total accumulated power and check for intrinsic safety.

Wiring to a 1797-TB3 or -TB3S Terminal Base Unit

Connect wiring to the terminal base as shown below.

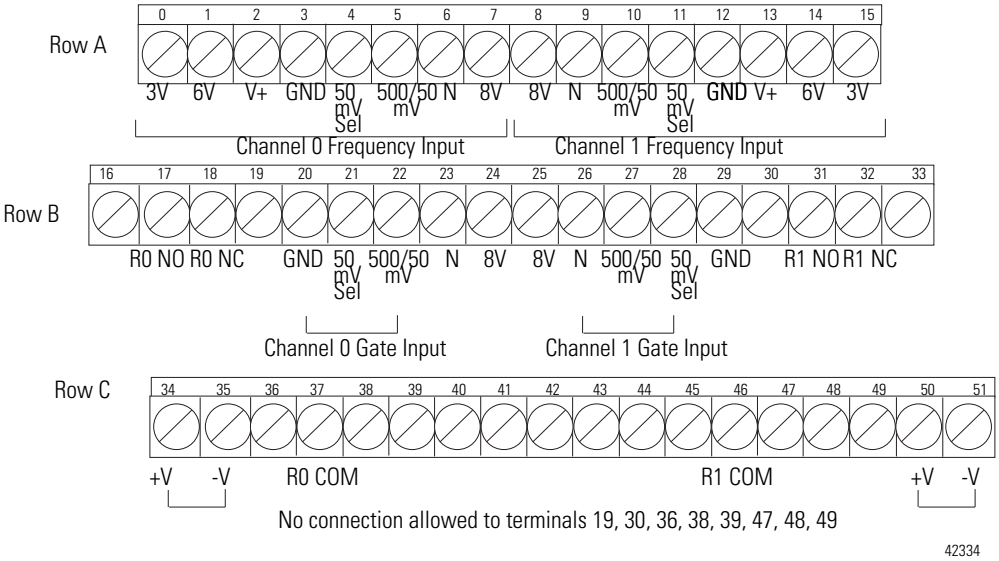

ATTENTION

Do not use any unused terminals on this terminal base unit. Using these terminals as supporting terminals can result in damage to the module and/or unintended operation of your system.

Intrinsically Safe Specifications

For a full list of specifications, refer to FLEX Ex Frequency Input Module Installation Instructions, publication 1797-5.7.

Operating Temperature	-20 to +70°C (-4 to +158°F)
Agency Certification	Class I Division 1 Groups A-D T4 Class I Zone 1 AEx ib[ia] IIC T4 ®Class II Division 1 Groups E, F, G; Class III
Certificates	UL Certificate Number 99.19699 c UL us

UL, C-UL I/O Entity Parameters

Wiring Methods

- Wiring method 1 - Each channel is wired separately.
- Wiring method 2 - Multiple channels in one cable, providing each channel is separated in accordance with the National Electric Code (NEC) or Canadian Electric Code (CEC).

Table 1: Entity Values for Field Device Connections

Wiring Method	Channel	Terminals	V_{oc} (V)	I_{sc} (mA)	V_t (V)	I_t (mA)	Groups	C_a (µF)	L_a (mH)
1 and 2	Any one channel	6, 7; 9, 8; 23, 24 26, 25	14.7	15.0	-	-	A, B, IIC	0.62	80.0
							C, E, IIB	1.82	320.0
							D, F, G, IIA	4.96	640.0
1 and 2	Any one channel	5, 3; 10, 12; 22, 20; 27, 29	14.7	10.0	-	-	A, B, IIC	0.62	150.0
							C, E, IIB	1.82	600.0
							D, F, G, IIA	4.96	1200.0
1 and 2	Any one channel	5, 3, 6, 4; 10, 12, 9, 11; 22, 20, 21, 23; 27, 29, 26, 28	14.7	10.0	-	-	A, B, IIC	0.62	150.0
							C, E, IIB	1.82	600.0
							D, F, G, IIA	4.96	1200.0
1 and 2	Any one channel	0, 2, 3; 1, 2, 3; 14, 12, 13; 15, 12, 13	26.5	82.0	-	-	A, B, IIC	0.095	2.0
							C, E, IIB	0.285	8.0
							D, F, G, IIA	0.76	16.0

Wiring Method	Channel	Terminals	V_{max} (V)	I_{max} (mA)	Groups	C_i (µF)	L_i (mH)
1 and 2	Any one channel	17, 18, 37 or 31, 32, 46	28	93.0	A, B, IIC	0.0	0.0
					C, E, IIB	0.0	0.0
					D, F, G, IIA	0.0	0.0

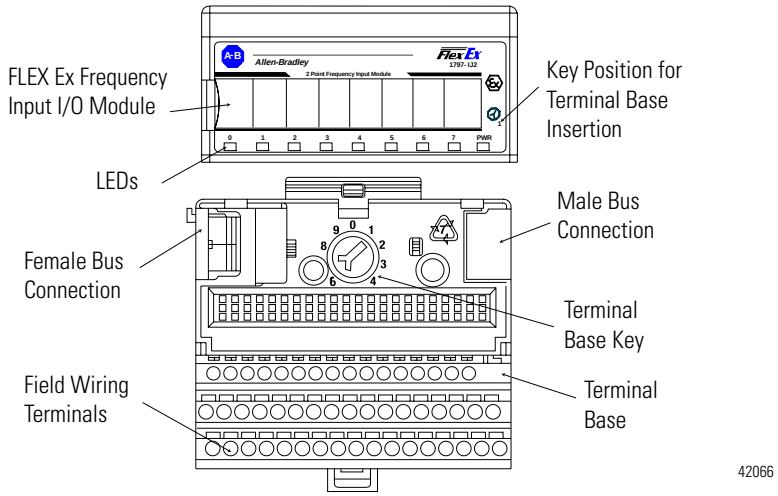

IMPORTANT A terminal base may or may not have an I/O module installed.

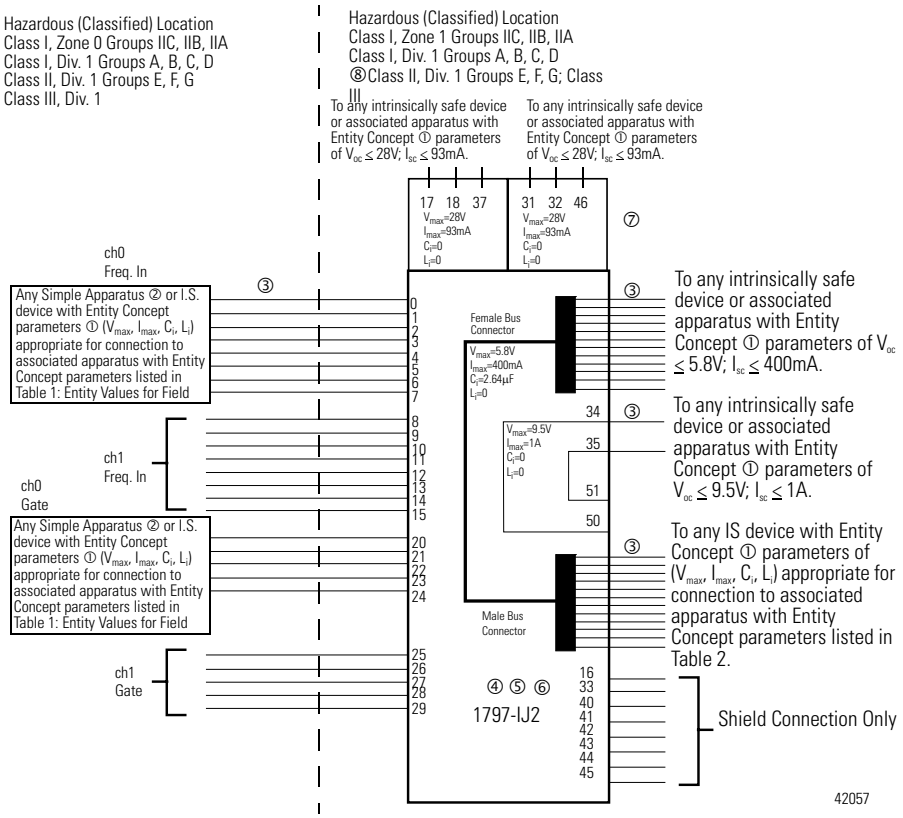

Table 2: Flexbus Entity Values Which are Allowed for the Next FLEX Ex I/O Module

Terminals	V_t (V)	I_t (mA)	Groups	C_a (µF)	L_a (µH)
Male Bus Connector	5.8	400	A-G IIC, IIB, IIA	3.0	3.0

Table 3: Flexbus Entity Values for this Module

Note: Any combination of up to eight FLEX Ex I/O modules may be attached on a flexbus.

Terminals	V_{max} (V)	I_{max} (mA)	Groups	C_i (µF)	L_i (µH)
Female Bus Connector	5.8	400	A-G IIC, IIB, IIA	2.64	0

① The entity concept allows interconnection of intrinsically safe apparatus with associated apparatus not specifically examined in combination as a system when the approved values of V_{oc} and I_{sc} or V_t and I_t of the associated apparatus are less than or equal to V_{max} and I_{max} of the intrinsically safe apparatus and the approved values of C_a and L_a of the associated apparatus are greater than C_i + C_{cable} and L_i + L_{cable} respectively for the intrinsically safe apparatus.

② Simple apparatus is defined as a device which neither generates nor stores more than 1.2V, 0.1A, 20µJ, or 25mW.

③ Wiring methods must be in accordance with the National Electric Code, ANSI/NFPA 70, Article 504 and 505 or the Canadian Electric Code CSA C22.1, Part 1, Appendix F. For additional information refer to ANSI/ISA RP12.6.

④ This module, 1797-IJ2, must be used with terminal base 1797-TB3 or 1797-TB3S.

⑤ Terminals 19, 30, 36, 38-39, and 47-49 shall not be connected.

⑥ WARNING: Substitution of components may impair intrinsic safety. AVERTISSEMENT: La substitution de composant peut compromettre la securite intrinseque.

⑦ The ambient operating temperature (T_{amb}) for this product is -20°C to 70°C.

⑧ Suitable for Class II, Division1, Groups E, F, G and Class III when mounted in a UL listed Type 4, 4X, 6, 6P, 9, 12, or 12K enclosure.

Notes:

1797-PS1N FLEX Ex Power Supply

Installation in Division 1/ Zone 1

The 1797-PS1N power supply has a protection factor of IP66. Refer to the specifications table for the IS module type.

ATTENTION

The power supply cannot be used in an intrinsically safe environment after its outputs have been exposed to non-intrinsically safe signals.

Outputs

The channels in the power supply are electrically connected to each other and have a common +V line.

IMPORTANT

You cannot interconnect lines because of the intrinsic safety requirements.

Typical Wiring Configurations

Terminal Base Assignments

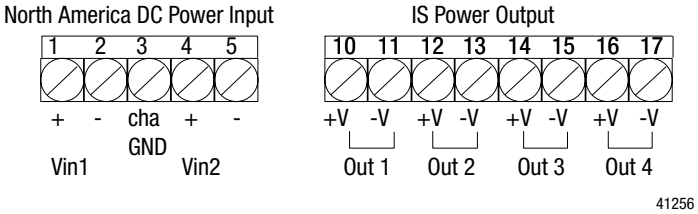

Intrinsically Safe Specifications

For a full list of specifications, refer to FLEX Ex 85-250V AC In/Quad-Ex DC Out Power Supply Installation Instructions, publication 1797-5.34.

Specifications	1797-PS1N
Inset Voltage Range	85 to 250V ac
Operational Temperature	-20 to 70°C (-4 to 158°F)
Agency Certification	Class I Division 1 Groups A, B, C, D Class II Division 1 Groups E, F, G Class III
Certificates	UL Certificate Number 99.19699 c UL us

ATTENTION

Once power has been applied, wait 15 minutes after disconnecting before opening cover.

UL, C-UL I/O Entity Parameters

Wiring Methods

- Wiring method 1 - Each channel is wired separately.
- Wiring method 2 - Multiple channels in one cable, providing each channel is separated in accordance with the National Electric Code (NEC) or Canadian Electric Code (CEC).

Table 1: Entity Values for Field Device Connections

Model	Wiring Method	Channel	Terminals	V_{oc} (V)	I_{sc} (A)	Groups	C_a (µF)	L_a (µH)
PS1N	1 and 2	Any one channel e.g. ch1	10(+), 11(-)	9.5	1.0	A, B	0.5	8
						C, E	1.5	32
						D, F, G	4.0	64

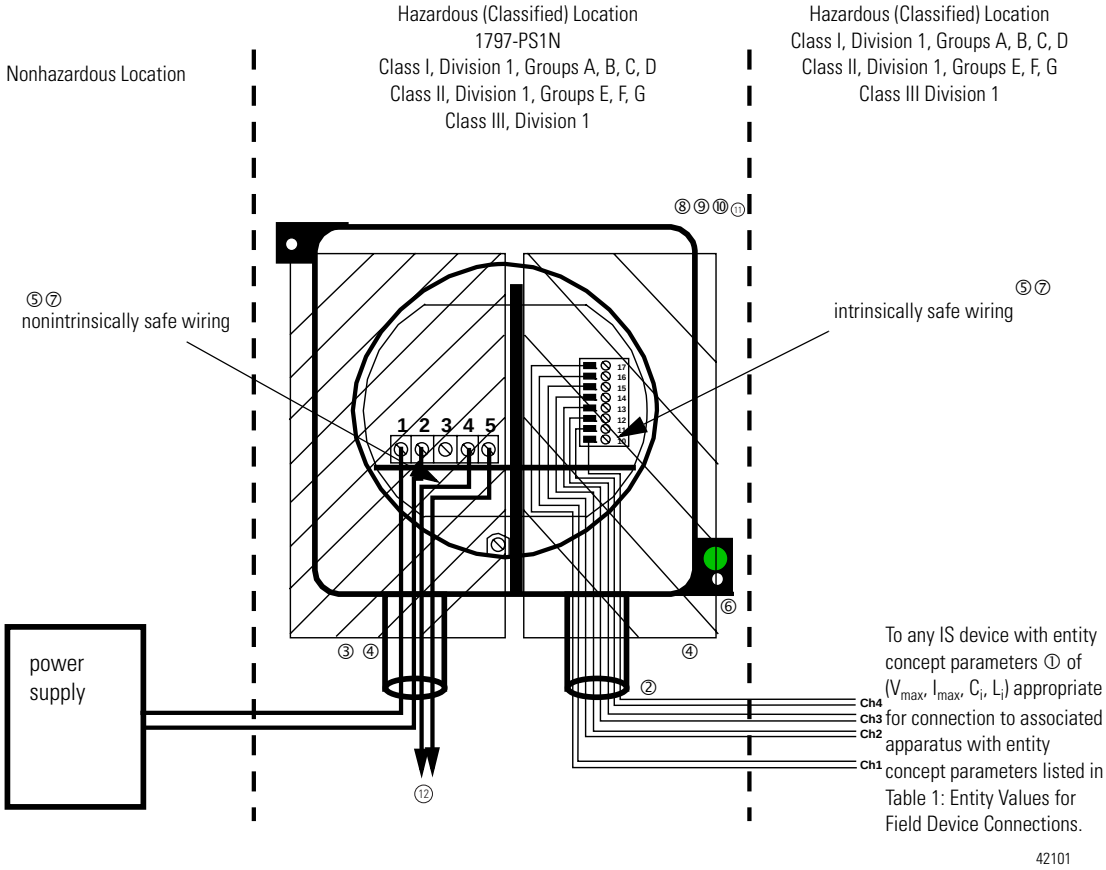

① The entity concept allows interconnection of intrinsically safe apparatus with associated apparatus not specifically examined in combination as a system when the approved values of V_{oc} and I_{sc} of the associated apparatus are less than or equal to V_{max} and I_{max} of the intrinsically safe apparatus and the approved values of C_a and L_a of the associated apparatus are greater than C_i + C_{cable} and L_i + L_{cable} respectively for the intrinsically safe apparatus.

② Wiring methods must be in accordance with the NEC, ANSI/NFPA 70, Article 504 or the CEC CSA C22.1, Part 1, Appendix F. For additional information refer to ANSI/ISA RP12.6.

③ Wiring methods must be in accordance with the NEC, ANSI/NFPA 70, Article 501 or the CEC CSA C22.1, Part 1, Section 18.

④ For mounting of the power supply, conduit runs must have sealing fittings connected within 6 inches of enclosure.

⑤ The wiring contained within the nonintrinsically safe wiring compartment and the intrinsically safe wiring compartment shall be separated from each other. Care must be taken to guarantee the separation of nonintrinsically safe and intrinsically safe wiring. The partitions within the power supply provide the necessary isolation for the electronics and the wiring, however, extreme care must be taken to guarantee wires are contained within their appropriate compartment and cannot contact any of the electronics.

⑥ WARNING: Substitution of components may impair intrinsic safety. AVERTISSEMENT: La substitution de composant peut compromettre la securite intrinseque.

⑦ Cable must be rated at a minimum of 100°C.

⑧ WARNING: Keep cover tightly closed when circuits are live.

⑨ After disconnecting power supply, wait fifteen minutes before removing cover.

⑩ No live maintenance.

⑪ The ambient temperature (T_{amb}) for this product is -20°C to 70°C.

⑫ Feed through power connection for 1797-PS1N.

1797-PS2N2 FLEX Ex Power Supply

Installation in Division 1/ Zone 1

The 1797-PS2N2 power supply has a protection factor of IP66. Refer to the specifications table for the IS module type.

ATTENTION

The power supply cannot be used in an intrinsically safe environment after its outputs have been exposed to non-intrinsically safe signals.

Outputs

The channels in the power supply are electrically connected to each other and have a common +V line.

IMPORTANT

You cannot interconnect lines because of the intrinsic safety requirements.

Typical Wiring Configurations

Terminal Base Assignments

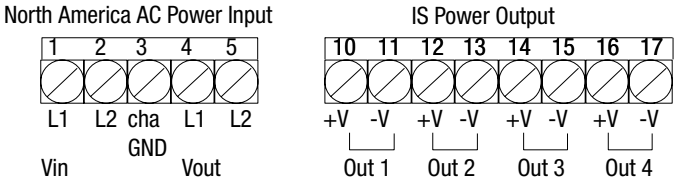

Intrinsically Safe Specifications

For a full list of specifications, refer to FLEX Ex Power Supply Installation Instructions, publication 1797-5.12.

Specifications	1797-PS2N2
Inset Voltage Range	19 to 32V dc
Operational Temperature	-20 to 70°C (-4 to 158°F)
Agency Certification	Class I Division 1 Groups A, B, C, D Class II Division 1 Groups E, F, G Class III
Certificates	UL Certificate Number 99.19699 c UL us

ATTENTION

Once power has been applied, wait 15 minutes after disconnecting before opening cover.

UL, C-UL I/O Entity Parameters

Wiring Methods

- Wiring method 1 - Each channel is wired separately.
- Wiring method 2 - Multiple channels in one cable, providing each channel is separated in accordance with the National Electric Code (NEC) or Canadian Electric Code (CEC).

Table 1: Entity Values for Field Device Connections

Model	Wiring Method	Channel	Terminals	V_{oc} (V)	I_{sc} (A)	Groups	C_a (µF)	L_a (µH)
PS2N2	1 and 2	Any one channel e.g. ch1	10(+), 11(-)	9.5	1.0	A, B	0.5	8
						C, E	1.5	32
						D, F, G	4.0	64

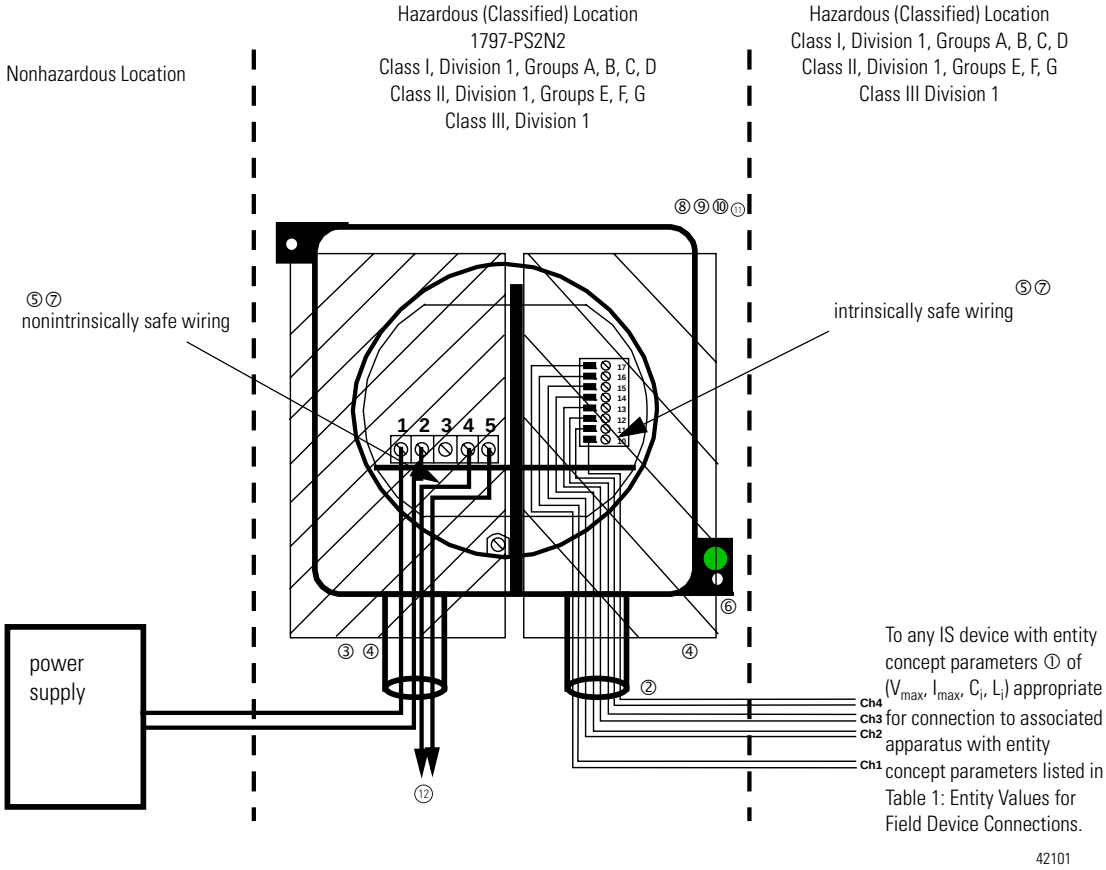

① The entity concept allows interconnection of intrinsically safe apparatus with associated apparatus not specifically examined in combination as a system when the approved values of V_{oc} and I_{sc} of the associated apparatus are less than or equal to V_{max} and I_{max} of the intrinsically safe apparatus and the approved values of C_a and L_a of the associated apparatus are greater than C_i + C_{cable} and L_i + L_{cable} respectively for the intrinsically safe apparatus.

② Wiring methods must be in accordance with the NEC, ANSI/NFPA 70, Article 504 or the CEC CSA C22.1, Part 1, Appendix F. For additional information refer to ANSI/ISA RP12.6.

③ Wiring methods must be in accordance with the NEC, ANSI/NFPA 70, Article 501 or the CEC CSA C22.1, Part 1, Section 18.

④ For mounting of the power supply, conduit runs must have sealing fittings connected within 6 inches of enclosure.

⑤ The wiring contained within the nonintrinsically safe wiring compartment and the intrinsically safe wiring compartment shall be separated from each other. Care must be taken to guarantee the separation of nonintrinsically safe and intrinsically safe wiring. The partitions within the power supply provide the necessary isolation for the electronics and the wiring, however, extreme care must be taken to guarantee wires are contained within their appropriate compartment and cannot contact any of the electronics.

⑥ WARNING: Substitution of components may impair intrinsic safety. AVERTISSEMENT: La substitution de composant peut compromettre la securite intrinseque.

⑦ Cable must be rated at a minimum of 100°C.

⑧ WARNING: Keep cover tightly closed when circuits are live.

⑨ After disconnecting power supply, wait fifteen minutes before removing cover.

⑩ No live maintenance.

⑪ The ambient temperature (T_{amb}) for this product is -20°C to 70°C.

⑫ Redundant power supply connection for model 1797-PS2N2.

1797-ACNR15 ControlNet Ex Redundant Media Adapter

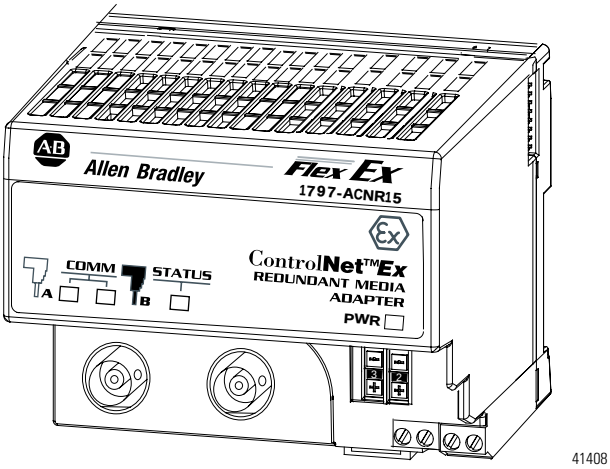

Module Installation

Use the redundant media adapter module to connect FLEX Ex modules to the ControlNet Ex network.

Inputs/Outputs

Do not apply any non-intrinsically safe signals to the adapter.

General Specifications

For a full list of specifications, refer to ControlNet Ex Redundant Media Adapter Installation Instructions, publication 1797-5.14.

Operational Temperature	-20 to 70°C (-4 to 158°F)
Agency Certification	Class I Division 1 Groups A-D T4 Class I Zone 1 AEx ib IIC T4 ①Class II Division 1 Groups E, F, G; Class III
Certificates	UL Certificate Number 99.19699 c UL us

① For Class II Division 1 Groups E, F, G and Class III, modules must be installed in a UL listed Type 4, 4X, 6, 6P, 9, 12, or 12K enclosure.

UL, cUL Entity Parameters and Requirements

UL, C-UL I/O Entity Parameters and Requirements

Table 2: Flexbus Entity Values Which are Allowed for the Next FLEX Ex I/O Module

Terminals	V_t (V)	I_t (mA)	Groups	C_a (μF)	L_a (μH)
Male Bus Connector	5.8	400	A-G	3.0	3.0

See the ControlNet Ex System chapter on page 21-1.

1797-RPA ControlNet Ex Modular Repeater Adapter and 1797-RPFM Fiber Repeater Module, Medium Distance

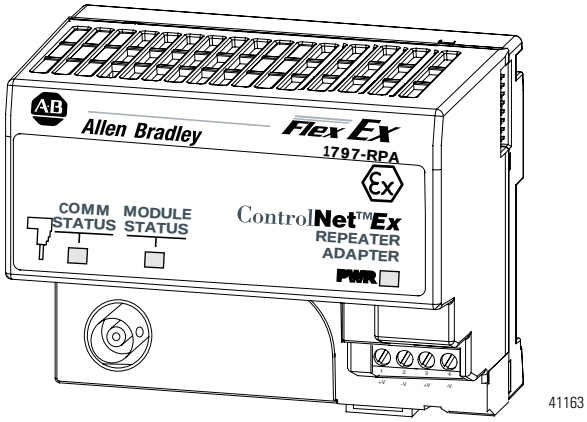

1797-RPA

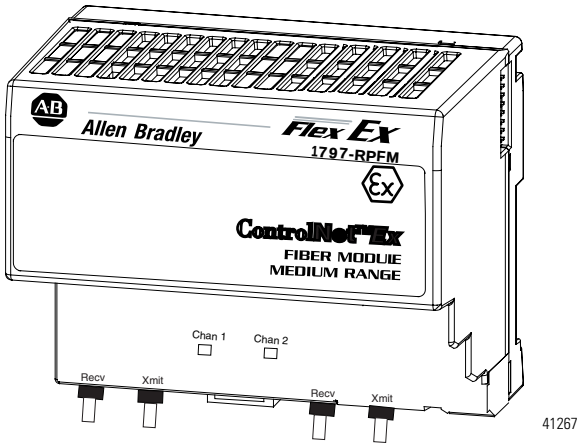

1797-RPFM

Module Installation

A maximum of two 1797-RPFM modules may be used with one 1797-RPA adapter.

Inputs/Outputs

Do not apply any non-intrinsically safe signals to the adapter or repeater module.

Intrinsically Safe Specifications

For a full list of specifications, refer to ControlNet Ex Modular Repeater Adapter and Fiber Repeater Module Installation Instructions, publication 1797-5.15.

Operational Temperature	-20 to 70°C (-4 to 158°F)
Agency Certification	**1797-RPA** Class I Division 1 Groups A-D T4 Class I Zone 1 AEx ib IIC T4 ①Class II Division 1 Groups E, F, G; Class III
	1797-RPFM Class I Division 1 Groups A-D T4 Class I Zone 1 AEx ib [ia] IIC T4 ①Class II Division 1 Groups E, F, G; Class III
Certificates	UL Certificate Number 99.19699 c UL us

① For Class II Division 1 Groups E, F, G and Class III, modules must be installed in a UL listed Type 4, 4X, 6, 6P, 9, 12, or 12K enclosure.

UL, cUL Entity Parameters and Requirements

See the ControlNet Ex System chapter on page 21-1.

1797-BCNR Redundant ControlNet Ex Barrier

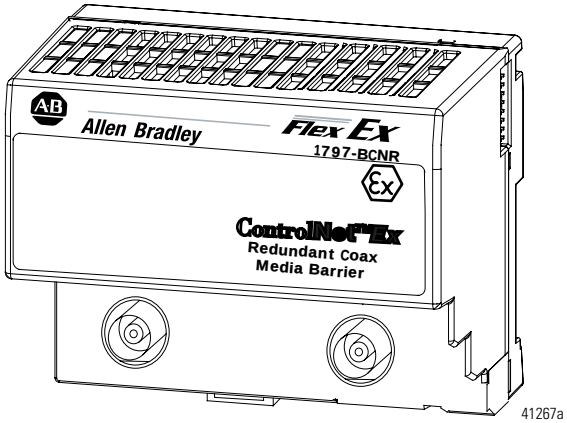

1797-BCNR

Description

The ControlNet Ex barrier type 1797-BCNR functions as a galvanic isolation barrier for signal between the non-intrinsic ControlNet system an intrinsically-safe ControlNet Ex system. The 1797-BCNR is installed in the safe area.

Inputs/Outputs

Do not apply any non-intrinsically safe signals to the intrinsically-safe side of the 1797-BCNR.

The BNC covers are provided with a cover plug. This cover plug can only be removed when a cable is connected. The IS connection must not be connected to any signals that exceed the intrinsically-safe values of the ControlNet Ex system.

Intrinsically Safe Specifications

The ControlNet Ex barrier type 1797-BCNR is an associated apparatus according to EN 50020. If the ControlNet Ex barrier is connected to intrinsically-safe circuits, the applicable national and local construction, installation, and operating regulations must be heeded (in Germany DIN EN 50020, DIN VDE 0165).

For a full list of specifications, refer to Redundant ControlNet Barrier Installation Instructions, publication 1797-5.1x.

1797-BCNR Specifications	
IS Output (BNC Connector in Blue Area)	Maximum open circuit voltage U_o is 7V Maximum current I_o is 14mA (at the resonant frequency of 66kHz)
Operating Temperature	-20 to +70°C (-4 to +158°F)
Agency Certification	II (2) G [EEx ib] IIC
Certificates	DMT 99 ATEX E xxx X Ex CE 0102

Repair

The ControlNet Ex barrier is not field-repairable. Any attempt to open this device will void the warranty and IS certification. If repair is necessary, return this device to the factory.

General FM Certification Information

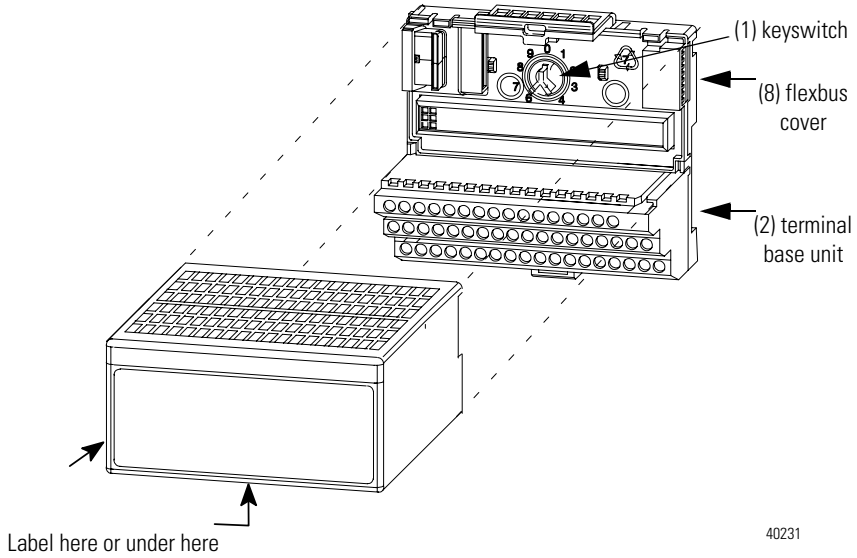

Module Installation

FLEX Ex I/O modules must be used with a 1797-TB3 or -TB3S intrinsically safe terminal base unit.

You will need to rotate the keyswitch (1) to the correct position depending on the module. Refer to the module's installation instructions for more information. **Do not change the position of the keyswitch after wiring the terminal base unit.**

Make certain that you only connect terminal base units to other intrinsically safe system modules, adapters or power supplies to maintain the integrity of the intrinsically-safe system. You may use the 1794-CE1 and/or 1794-CE3 cables with the FLEX Ex system.

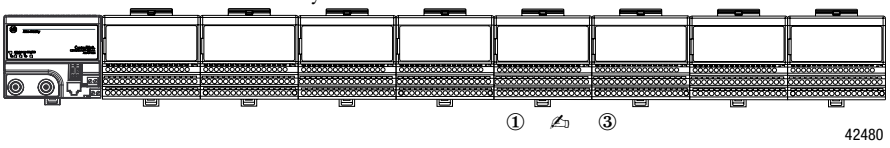

Remove cap plug and attach another intrinsically safe terminal base unit (2) to the right of the terminal base unit if required.

Do not remove the flexbus cover (8) on the right-most terminal base unit.

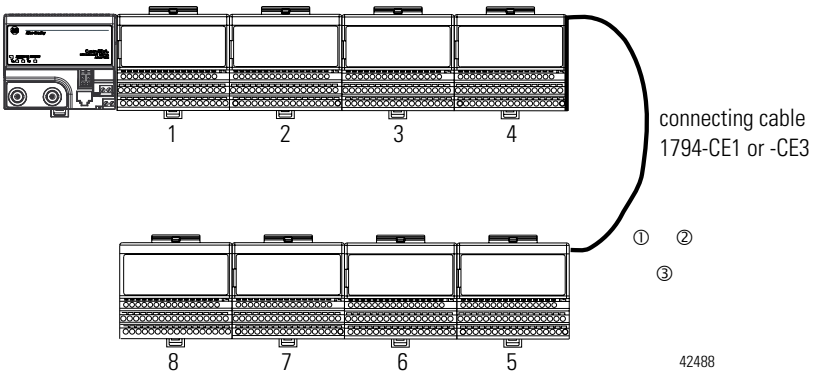

① I/O module capacitance value is cumulative. $C_{i\ (total)} = C_{i\ (I/O\ module\ 1)} + C_{i\ (I/O\ module\ 2)} + ... C_{i\ (I/O\ module\ 8)} + C_{cable}$ (C_{cable} = 100pf). $C_{i\ (total)}$ must be less than 30µF (when the 1797-ACNR15 is used) or 39.67µF (when the 1797-BIC is used). The limitation of 8 I/O modules per adapter is a functional limitation. Refer to table 3 of the appropriate module for C_i values. **Note:** Any combination of up to eight FLEX Ex I/O modules meets this requirement. (This includes 1794-CE3, 1797-CE3, 1794-CE1, and 1797-CE1 cables.)

② In any of the above diagrams, terminal bases without modules may be connected.

③ This general FM certification information must be used in conjunction with the appropriate module certification information.

Installation in Division 1/ Zone 1

Modules, adapters, and terminal base units must not be exposed to the environment. Provide a suitable enclosure.

ATTENTION

Modules, adapters, and terminal base units cannot be used in an intrinsically safe environment after they have been exposed to non-intrinsically safe signals.

Electrostatic Charge

Protect the system against electrostatic charge. Post a sign near each module: **Attention! Avoid electrostatic charge.** For your convenience, a sign which can be cut out and posted is included in this chapter.

FM I/O Entity Parameters

If this product has the FM mark, it has been designed, evaluated, tested, and certified to meet the following standards:

- FM C1. No.3600:1998, Electrical Equipment for Use in Hazardous (Classified) Locations General Requirements
- FM C1. No.3610:1999, Intrinsically Safe Apparatus and Associated Apparatus for Use in Class I, II, III Division 1 Hazardous (Classified) Locations
- FM C1. No.3615:1989, Explosionproof Electrical Equipment General Requirements
- FM C1. No.3810:1989, 1995, Electrical and Electronic Test, Measuring and Process Control Equipment
- ANSI/NEMA 250, 1991, Enclosures for Electrical Equipment

Repair

Modules are not field-repairable. Any attempt to open a module will void the warranty and the IS certification. If repair is necessary, return the module to the manufacturer.

Attention: Avoid electrostatic charge.

Notes:

ControlNet Ex System

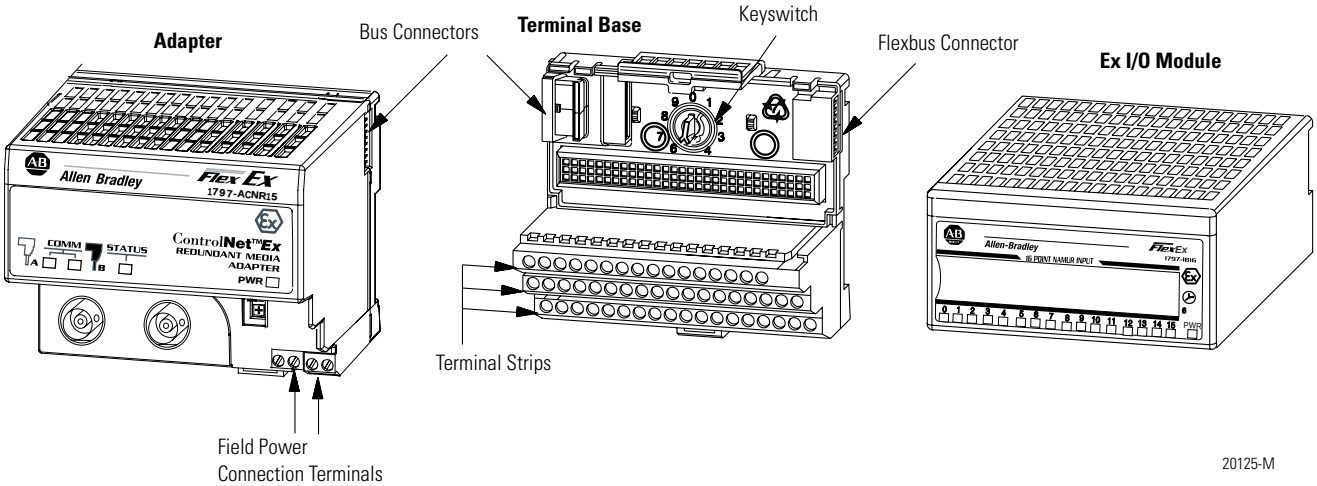

ControlNet Ex System Diagram

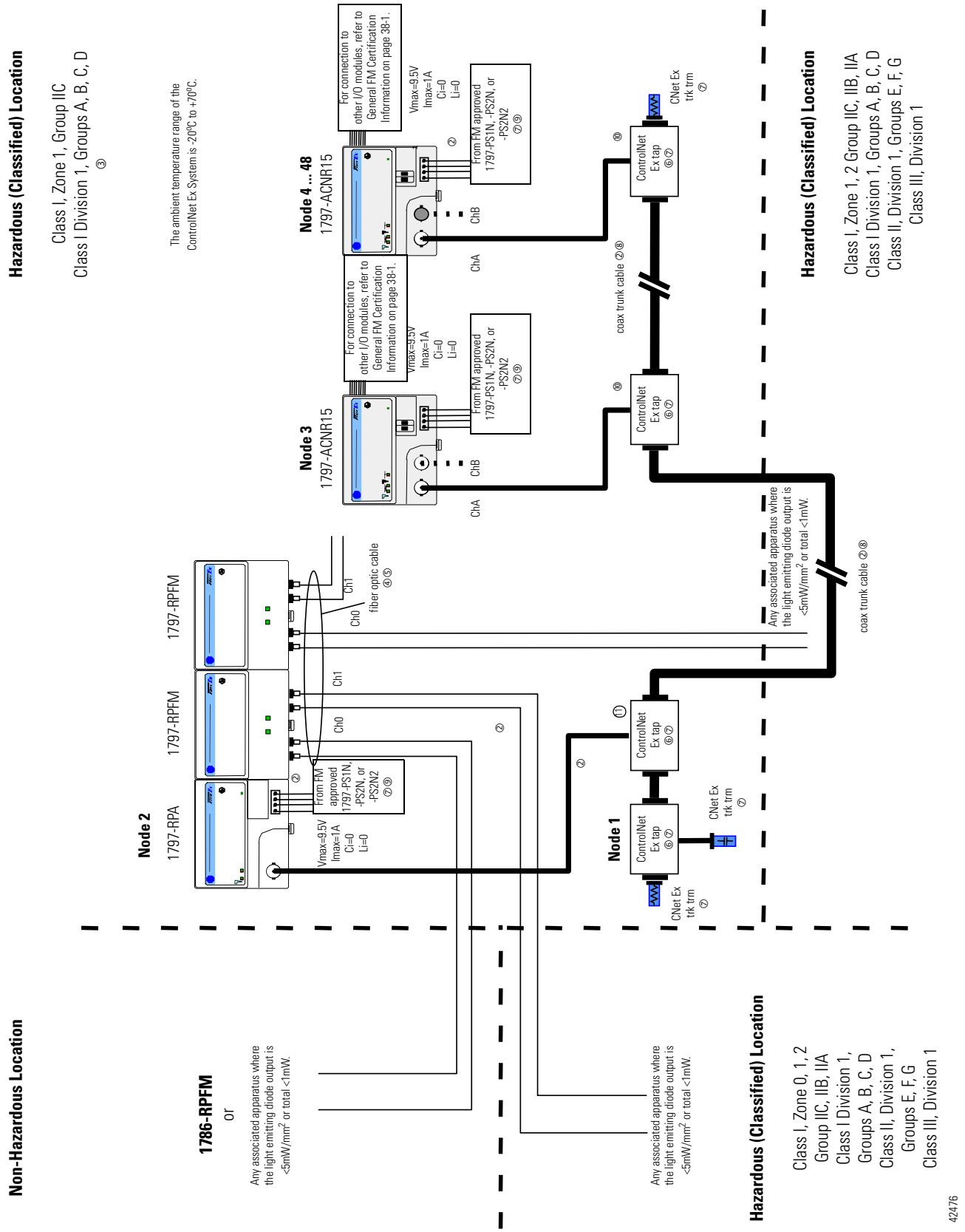

Describing the ControlNet Ex System Diagram

A maximum of 48 ControlNet Ex™ nodes may be connected together by 250m of coax cable and 48 taps. The distance increases to 1000m when you use only 2 taps. See the table below for more information.

The fiber media of the 1797-RPFM can be installed in a hazardous location (Class I, Zones 0, 1, and 2; Class I, Division 1 and 2; Class II, Division 1 and 2; Class III, Division 1 and 2) to connect two 1797-RPFM modules or they can be installed through different locations into the non-hazardous location to connect the 1797-RPFM with any approved associated apparatus.

All cables and fiber media that are not light blue must be marked as IS using the 1797-EXMK marking kit or other locally approved IS identification and/or segregation method.

During the installation of the ControlNet Ex system, all metallic parts must be isolated to prevent an earth connection (high voltage withstanding of isolating material must be > 500V ac).

System Diagram Name	Catalog Number	Catalog Name	Description
1797-RPA	1797-RPA	ControlNet Ex Modular Repeater Adapter	Represents one ControlNet Ex node and must be connected to a coax trunk cable by 1797-TPx
1797-RPFM	1797-RPFM	ControlNet Ex Fiber Repeater Module, Medium Distance	Allows connection of a maximum of two devices per 1797-RPA and is powered directly by 1797-RPA
1797-ACNR15	1797-ACNR15	Redundant Media ControlNet Ex Adapter	Represents one ControlNet Ex node and must be connected to a coax trunk cable by 1797-TPx -each one with two redundant output channels that are connected to different ControlNet Ex networks (coax cables and 1797-TPx)
CNet Ex Tap Trm	1797-TCAP	ControlNet Ex Tap (Dummy) Terminator	Represents one ControlNet Ex node and is a simple capacitor (56pF) with a coax connector
ControlNet Ex Tap	1797-TPx	ControlNet Ex Coax Tap	Four types of connections available: S (straight t-tap), R (right angle t-tap), YS (straight y-tap), and YR (right angle y-tap) - a maximum of 48 taps can be connected together by coax trunk cable
CNet Ex Trk Trm	1797-XT	ControlNet Ex Trunk Terminator	Simple resistor (75Ω) with coax connector that must be on each end of the ControlNet Ex coax trunk for termination
Coax Trunk Cable	1797-RG6	Quad-Shield, RG-6 75Ω Coax Trunk Cable	Maximum (functional) length between 2 1797-TPx is 3280ft (1000m) - each 1797-TPx reduces the (functional) coax cable length by 53.4ft (16.3m)
None	None	Standard Coax Trunk Cable BNC Couplers	Different standard cable couplers, 90°, 180°, etc.

Certified Equivalent ControlNet Ex System Diagram Items

You may use these items as equivalents for the items shown on the system diagram.

System Diagram Name	Catalog Number	Source
1797-RPA	1797-RPA ⑦	Allen-Bradley
	RSD-CFA-Ex.CN ⑦	Pepperl+Fuchs
1797-RPFM	1797-RPFM ⑦	Allen-Bradley
	RSD-FC-Ex2.CN ⑦	Pepperl+Fuchs
1797-ACNR15	1797-ACNR15 ⑦	Allen-Bradley
	RSD-GW-Ex2.CN ⑦	Pepperl+Fuchs
Coax Trunk Cable[1]	1797-RG6	Allen-Bradley
	3092A[2]	Belden Wire & Cable Co.
	3092A with blue jacket	Belden Wire & Cable Co.
ControlNet Ex Tap	1797-TPx	Allen-Bradley
	RS-TPx-Ex	Pepperl+Fuchs
CNet Ex Trk Trm	1797-XT	Allen-Bradley
	RS-XT-Ex	Pepperl+Fuchs
CNet Ex Tap Trm	1797-TCAP	Allen-Bradley
	RS-TCAP-Ex	Pepperl+Fuchs

1 In addition to these cable types, the following specification can be followed to allow additional types:
Cable Impedance = 75Ω ± 3Ω
Cable Capacitance = ≤5.94nF per 100m
Cable Resistance = ≥9.08Ω per 100m

Cable Attenuation	0.2MHz ≥ 0.93dB/100m	5MHz ≥ 1.39dB/100m
(-20 to +70°C)	0.5MHz ≥ 0.95dB/100m	10MHz ≥ 1.86dB/100m
	1MHz ≥ 1.07dB/100m	20MHz ≥ 2.73dB/100m
	2MHz ≥ 1.16dB/100m	50MHz ≥ 4.33dB/100m

2 Belden Wire & Cable 1189A may be used, but with functional loss of communication distance and/or nodes.

① The entity concept allows interconnection of intrinsically safe apparatus with associated apparatus not specifically examined in combination as a system when the approved values of V_{oc} and I_{sc} or V_t and I_t of the associated apparatus are less than or equal to V_{max} and I_{max} of the intrinsically safe apparatus and the approved values of C_a and L_a of the associated apparatus are greater than C_i + C_{cable} and L_i + L_{cable} respectively for the intrinsically safe apparatus.

② Wiring methods must be in accordance with the National Electric Code, ANSI/NFPA 70, Article 504 and 505. For additional information refer to ANSI/ISA RP12.6.

③ WARNING: Substitution of components may impair intrinsic safety.

④ If fiber optic cable is provided with a metal shield, it must be connected to a dedicated intrinsic safety ground in the non-hazardous location and tied back in the hazardous location or be connected to a ground in the hazardous location and tied back in the non-hazardous location.

⑤ The glass fiber must have a minimum diameter of 6µm.

⑥ The ControlNet Ex tap must be connected directly to the module (no additional cable may be connected).

⑦ Must be FM approved.

⑧ Total coax trunk cable length is limited to 1000m (3280 ft) with up to 2 ControlNet Ex taps connected and to 250m (820 ft) with the maximum allowed ControlNet Ex taps of 48. For ControlNet Ex taps between 2 and 48 use: 1000m (3280 ft) - 16.3m (53.4 ft) x (number of taps - 2) to find the maximum allowed cable length.

⑨ Power supplies are suitable for mounting in Class I, Division 1, Groups B-D or Class I, Zone 1, Group IIC.

⑩ The maximum number of 1797-ACNR15 modules that can be connected to one system is 47.

⑪ The maximum number of 1797-RPA modules that can be connected to one system is 47.

Notes:

1797-TB3 FLEX Ex Terminal Base Unit

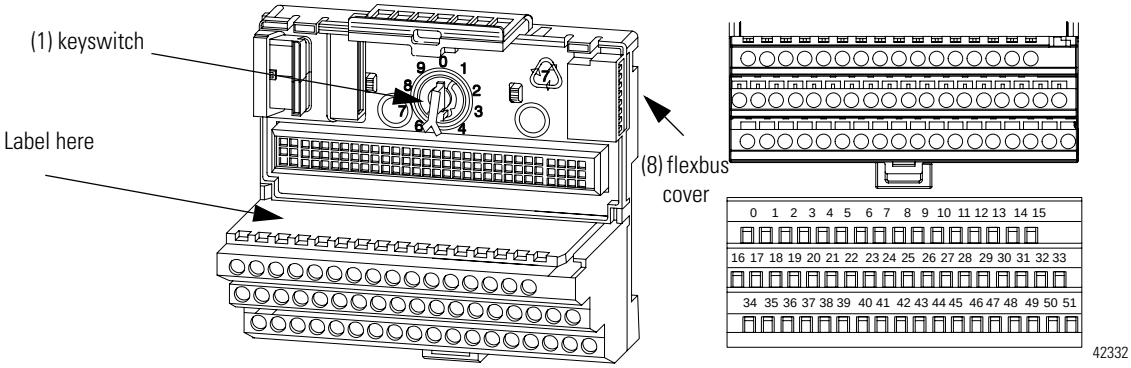

Module Installation

You will need to rotate the keyswitch (1) to the correct position depending on the module. Refer to the module's installation instructions for more information. **Do not change the position of the keyswitch after wiring the terminal base unit.**

Make certain that you only connect terminal base units to other intrinsically safe system modules or adapters to maintain the integrity of the intrinsically-safe backplane.

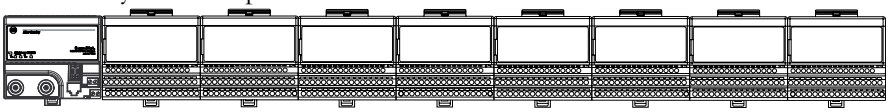

Installation in Division 1/ Zone 1

Do not remove the flexbus cover (8) on the right-most terminal base unit.

Inputs

Do not apply any non-instrinsically safe signals to the terminal base.

The terminals in the terminal base unit may be electrically connected to each other by the insertion of FLEX Ex I/O modules. See the module installation instructions to determine this.

IMPORTANT When interconnecting several lines, you must consider the total accumulated power and check for intrinsic safety requirements.

Description

The 1797-TB3 terminal base has 36 wiring connections to/from a plug-in module. The use of each terminal depends on the module mounted in this base.

The 1797-TB3 terminal base also has connections for cold junction compensation and terminals designated for shield termination to chassis ground.

The terminal base is equipped with a factory-installed tab cover for the backplane bus connection. The tab cover may be removed only when the terminal base unit is connected to other terminal base units..

Wiring Connections for Terminal Base 1797-TB3

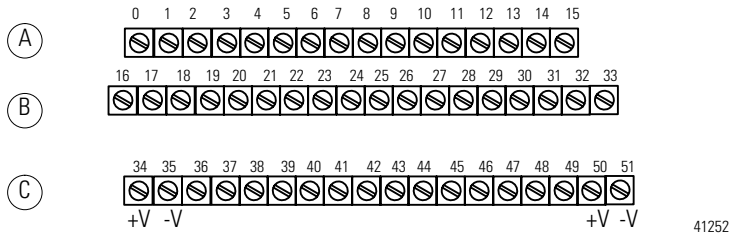

No connections allowed to terminals 36 and 49

ATTENTION

- Make certain that you power the terminal base unit with an intrinsically safe power supply. Do not exceed the values listed in the specifications for the terminal base unit.
- Do not use the unused terminals on the terminal base unit. Using these terminals as supporting terminals can result in damage to modules and/or unintended operation of your system.

Intrinsically Safe Specifications

For a full list of specifications, refer to the FLEX Ex Terminal Base Installation Instructions, publication 1797-5.1.

Operational Temperature	-20 to 70°C (-4 to 158°F)
Agency Certification	Class I Division 1 Groups A-D T4 Class I Zone 1 AEx ib [ia] IIC T4
Certificates	FM Certificate Number 3009806 FM

Notes:

1797-TB3S FLEX Ex Terminal Base Unit

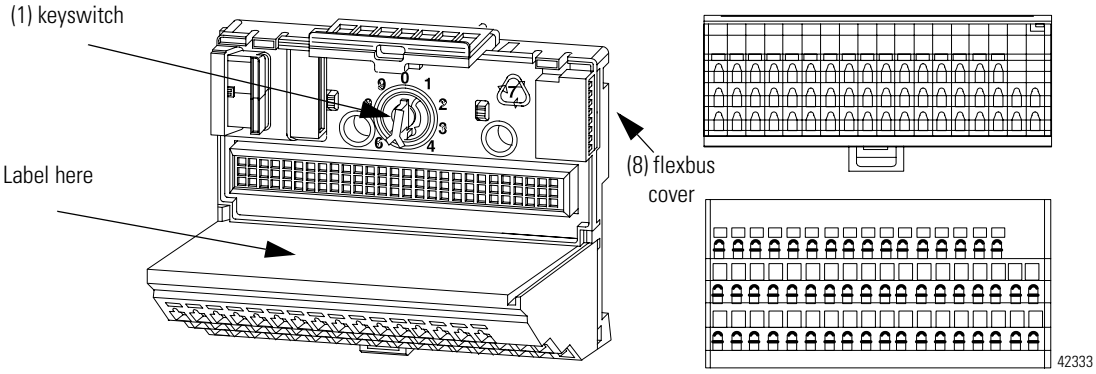

Module Installation

You will need to rotate the keyswitch (1) to the correct position depending on the module. Refer to the module's installation instructions for more information. **Do not change the position of the keyswitch after wiring the terminal base unit.**

Make certain that you only connect terminal base units to other intrinsically safe system modules or adapters to maintain the integrity of the intrinsically-safe backplane.

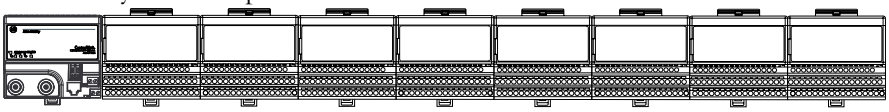

41307

Installation in Division 1/ Zone 1

Do not remove the flexbus cover (8) on the right-most terminal base unit.

Inputs

Do not apply any non-instrinsically safe signals to the terminal base.

The terminals in the terminal base unit may be electrically connected to each other by the insertion of FLEX Ex I/O modules. See the module installation instructions to determine this.

IMPORTANT When interconnecting several lines, you must consider the total accumulated power and check for intrinsic safety requirements.

Description

The 1797-TB3S terminal base has 36 wiring connections to/from a plug-in module. The use of each terminal depends on the module mounted in this base.

The 1797-TB3S terminal base also has connections for cold junction compensation and terminals designated for shield termination to chassis ground.

The terminal base is equipped with a factory-installed tab cover for the backplane bus connection. The tab cover may be removed only when the terminal base unit is connected to other terminal base units.

Wiring Connections for Terminal Base 1797-TB3S

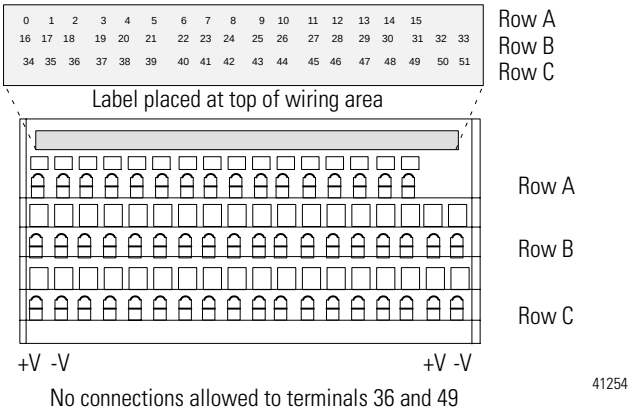

ATTENTION

- Make certain that you power the terminal base unit with an intrinsically safe power supply. Do not exceed the values listed in the specifications for the terminal base unit.
- Do not use the unused terminals on the terminal base unit. Using these terminals as supporting terminals can result in damage to modules and/or unintended operation of your system.

Intrinsically Safe Specifications

For a full list of specifications, refer to the FLEX Ex Spring Clamp Terminal Base Installation Instructions, publication 1797-5.2.

Operational Temperature	-20 to 70°C (-4 to 158°F)
Agency Certification	Class I Division 1 Groups A-D T4 Class I Zone 1 AEx ib [ia] IIC T4
Certificates	FM Certificate Number 3009806 FM

Notes:

1797-IBN16 FLEX Ex 16 NAMUR Input Module

Inputs

Each input can be operated from a NAMUR sensor or a mechanical contact (if mechanical inputs are used). **Do not apply any non-intrinsically safe signals to this module.**

The channels in this module are electrically connected to each other and have a common plus-line.

IMPORTANT When interconnecting several lines, you must consider the total accumulated power and check for intrinsic safety.

Wiring to a 1797-TB3 or -TB3S Terminal Base Unit

Connect wiring to the terminal base as shown below.

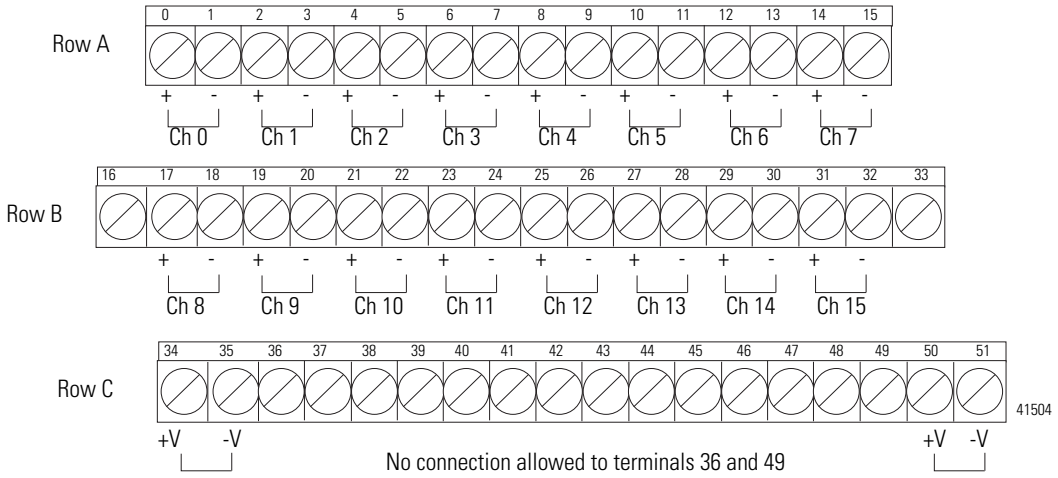

ATTENTION Do not use any unused terminals on this terminal base unit. Using these terminals as supporting terminals can result in damage to the module and/or unintended operation of your system.

Intrinsically Safe Specifications

For a full list of specifications, refer to FLEX Ex 16 NAMUR Input Module Installation Instructions, publication 1797-5.7.

Operating Temperature	-20 to +70°C (-4 to +158°F)
Agency Certification	Class I Division 1 Groups A-D T4 Class I Zone 1 AEx ib/[ia] IIC T4
Certificates	FM Certificate Number 3009806 FM

FM I/O Entity Parameters (Each Channel)

Wiring Methods

- Wiring method 1 - Each channel is wired separately.
- Wiring method 2 - Multiple channels in one cable, providing each channel is separated in accordance with the National Electric Code (NEC).

Table 1: Entity Values for Field Device Connections

Wiring Method	Channel	Terminals	V_{oc} (V)	I_{sc} (mA)	V_t (V)	I_t (mA)	Groups	C_a (μF)	L_a (mH)
1 and 2	Any one channel e.g. ch0	0(+), 1(-)	14.5	15	-	-	A, B	0.3	80.0
							C, E	0.9	320.0
							D, F, G	2.4	640.0

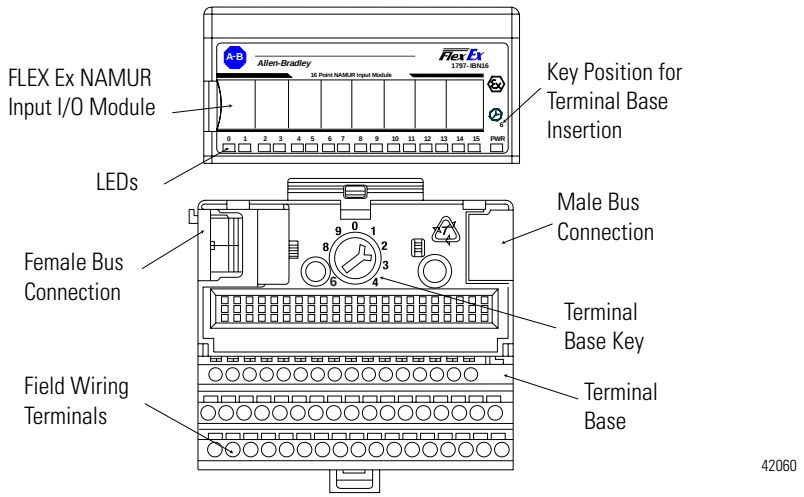

IMPORTANT A terminal base may or may not have an I/O module installed.

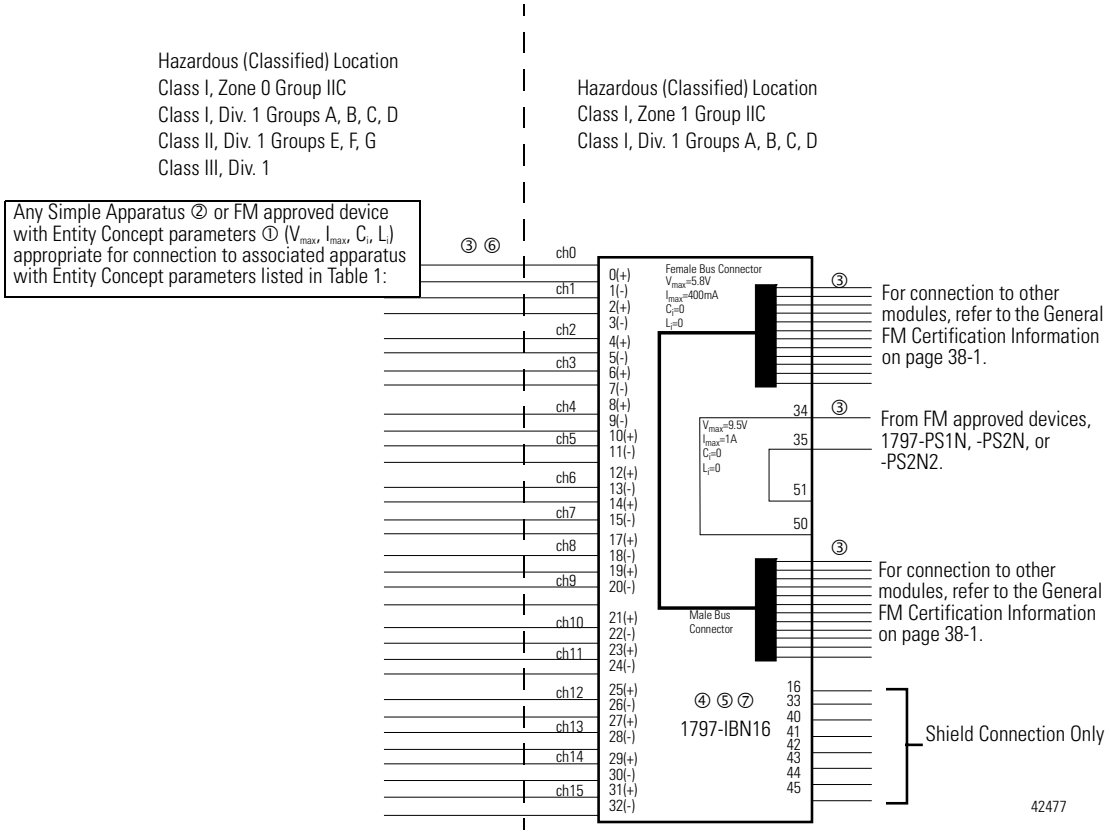

Table 2: Flexbus Entity Values Which are Allowed for the Next FLEX Ex I/O Module

Terminals	V_t (V)	I_t (mA)	Groups	C_a (μF)	L_a (μH)
Male Bus Connector	5.8	400	A-G	3.0	3.0

Table 3: Flexbus Entity Values for this Module

Note: Any combination of up to eight FLEX Ex I/O modules may be attached on a flexbus.

Terminals	V_{max} (V)	I_{max} (mA)	Groups	C_i (μF)	L_i (μH)
Female Bus Connector	5.8	400	A-G	0	0

① The entity concept allows interconnection of intrinsically safe apparatus with associated apparatus not specifically examined in combination as a system when the approved values of V_{oc} and I_{sc} or V_t and I_t of the associated apparatus are less than or equal to V_{max} and I_{max} of the intrinsically safe apparatus and the approved values of C_a and L_a of the associated apparatus are greater than C_i + C_{cable} and L_i + L_{cable} respectively for the intrinsically safe apparatus.

② Simple apparatus is defined as a device which neither generates nor stores more than 1.2V, 0.1A, 20μJ, or 25mW.

③ Wiring methods must be in accordance with the National Electric Code, ANSI/NFPA 70, Article 504 and 505. For additional information refer to ANSI/ISA RP12.6.

④ This module, 1797-IBN16, must be used with terminal base 1797-TB3 or 1797-TB3S.

⑤ Terminals 36-39, and 46-49 shall not be connected.

⑥ Any combination of up to eight channels may be connected in parallel and connected to simple apparatus in a hazardous location. If two channels are connected in parallel, the total cable inductance must be limited to 20mH for Groups A and B, 80mH for Groups C and E, and 160mH for Groups D, F, and G. If eight channels are connected in parallel, the total cable inductance must be limited to 2mH for Groups A and B, 8mH for Groups C and E and 16mH for Groups D, F, and G.

⑦ WARNING: Substitution of components may impair intrinsic safety.

1797-OB4D FLEX Ex 24V dc Non-Isolated Source 4 Output Module

Outputs

Each output can operate a discrete field device. **Do not apply any non-intrinsically safe signals to this module.**

The channels in this module are electrically connected to each other.

Wiring to a 1797-TB3 or -TB3S Terminal Base Unit

Connect wiring to the terminal base as shown below.

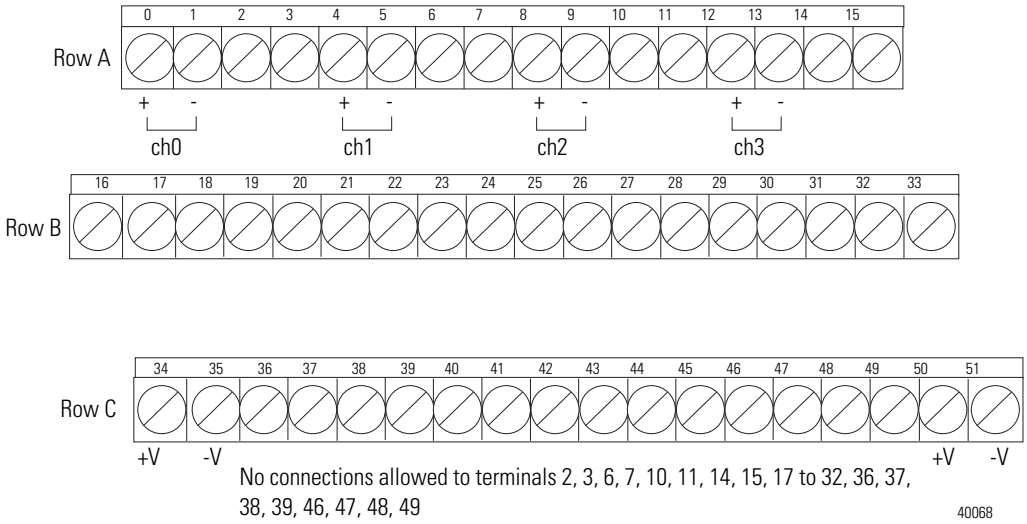

ATTENTION

Do not use any unused terminals on this terminal base unit. Using these terminals as supporting terminals can result in damage to the module and/or unintended operation of your system.

Intrinsically Safe Specifications

For a full list of specifications, refer to FLEX Ex 24V dc Non-Isolated Source 4 Output Module Installation Instructions, publication 1797-5.6.

Operating Temperature	-20 to +70°C (-4 to +158°F)
Agency Certification	Class I Division 1 Groups A-D T4 Class I Zone 1 AEx ib/[ia] IIC T4
Certificates	FM Certificate Number 3009806 FM

FM I/O Entity Parameters

Wiring Methods

- Wiring method 1: Each channel is wired separately.
- Wiring method 2: Multiple channels in one cable, providing each channel is separated in accordance with the National Electric Code (NEC).

Table 1: Entity Values for Field Device Connections

Wiring Method	Channel	Terminals	V_{oc} (V)	I_{sc} (mA)	V_t (V)	I_t (mA)	Groups	C_a (µF)	L_a (mH)
1 and 2	Any one channel e.g. ch0	0(+), 1(-)	27.4	110.0	-	-	A, B,	0.105	3.0
							C, E	0.315	9.0
							D, F, G	0.840	24.0

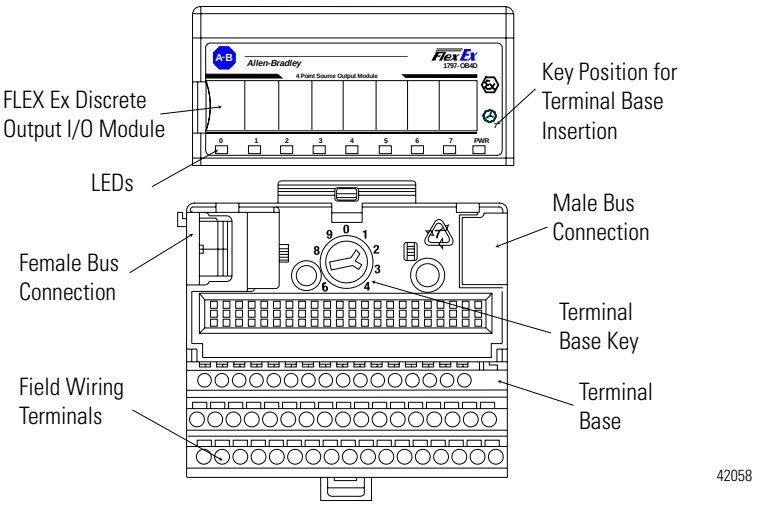

IMPORTANT A terminal base may or may not have an I/O module installed.

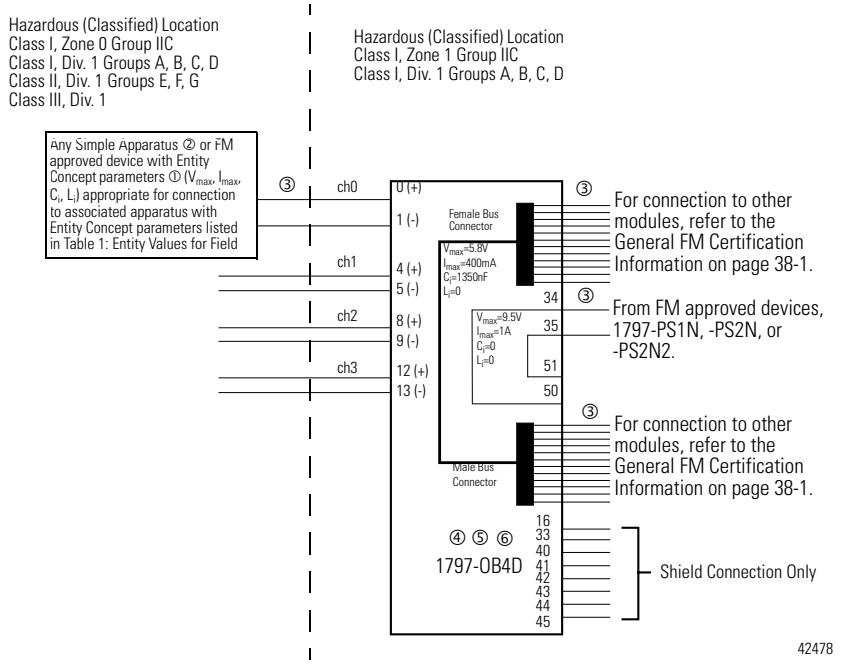

Table 2: Flexbus Entity Values Which are Allowed for the Next FLEX Ex I/O Module

Terminals	V_t (V)	I_t (mA)	Groups	C_a (μF)	L_a (μH)
Male Bus Connector	5.8	400	A-G	3.0	3.0

Table 3: Flexbus Entity Values for this Module

Note: Any combination of up to eight FLEX Ex I/O modules may be attached on a flexbus.

Terminals	V_{max} (V)	I_{max} (mA)	Groups	C_i (μF)	L_i (μH)
Female Bus Connector	5.8	400	A-G	1.35	0

① The entity concept allows interconnection of intrinsically safe apparatus with associated apparatus not specifically examined in combination as a system when the approved values of V_{oc} and I_{sc} or V_t and I_t of the associated apparatus are less than or equal to V_{max} and I_{max} of the intrinsically safe apparatus and the approved values of C_a and L_a of the associated apparatus are greater than C_i + C_{cable} and L_i + L_{cable} respectively for the intrinsically safe apparatus.

② Simple apparatus is defined as a device which neither generates nor stores more than 1.2V, 0.1A, 20μJ, or 25mW.

③ Wiring methods must be in accordance with the National Electric Code, ANSI/NFPA 70, Article 504 and 505. For additional information refer to ANSI/ISA RP12.6.

④ This module, 1797-OB4D, must be used with terminal base 1797-TB3 or 1797-TB3S.

⑤ Terminals 2, 3, 6, 7, 10, 11, 14, 15, 17-32, 36-39, and 46-49 shall not be connected.

⑥ WARNING: Substitution of components may impair intrinsic safety.

1797-IE8 FLEX Ex 8 Input Analog Module

Inputs

Each input can be operated from an analog field device signal. **Do not apply any non-intrinsically safe signals to this module.**

The channels in this module are electrically connected to each other and have a common plus-line.

IMPORTANT When interconnecting several lines, you must consider the total accumulated power and check for intrinsic safety.

Wiring to a 1797-TB3 or -TB3S Terminal Base Unit

Connect wiring to the terminal base as shown below.

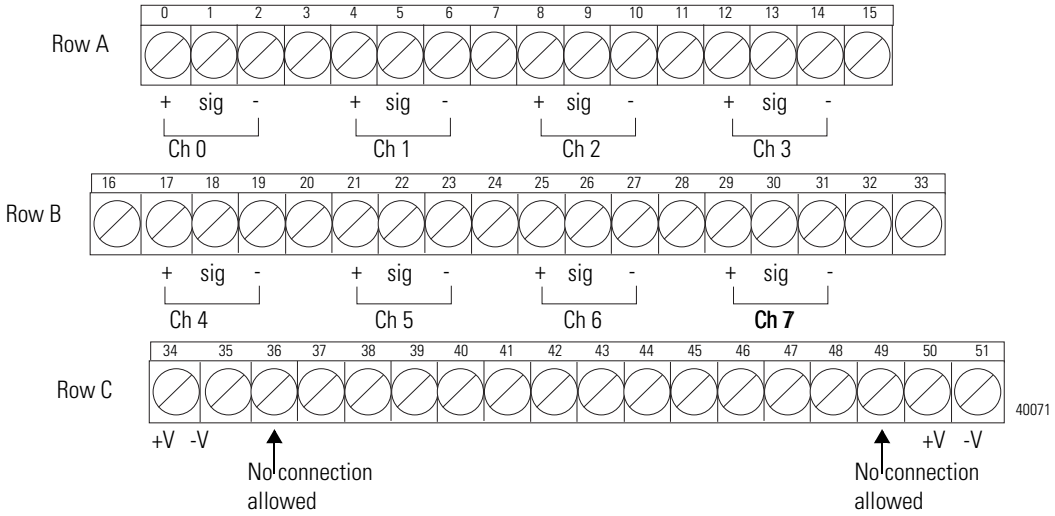

ATTENTION Do not use any unused terminals on this terminal base unit. Using these terminals as supporting terminals can result in damage to the module and/or unintended operation of your system.

Intrinsically Safe Specifications

For a full list of specifications, refer to FLEX Ex 8 Input Analog Module Installation Instructions, publication 1797-5.5.

Operating Temperature	-20 to +70°C (-4 to +158°F)
Agency Certification	Class I Division 1 Groups A-D T4 Class I Zone 1 AEx ib/[ia] IIC T4
Certificates	FM Certificate Number 3009806 FM

FM I/O Entity Parameters

Wiring Methods

- Wiring method 1 - Each channel is wired separately.
- Wiring method 2 - Multiple channels in one cable, providing each channel is separated in accordance with the National Electric Code (NEC).

Table 1: Entity Values for Field Device Connections

Wiring Method	Channel	Terminals	V_{oc} (V)	I_{sc} (mA)	V_t (V)	I_t (mA)	Groups	C_a (µF)	L_a (mH)
1 and 2	Any one channel e.g. ch0	0(+), 1(sig)	23.7	92.5	-	-	A, B	0.15	4.0
							C, E	0.45	12.0
							D, F, G	1.20	32.0
		1(sig), 2(-)	5	1.0	-	-	A, B	100	1000
							C, E	300	1000
							D, F, G	800	1000
		0(+), 1(sig), 2(-)	-	-	23.7	93.5	A, B	0.15	4.0
							C, E	0.45	12.0
							D, F, G	1.20	32.0

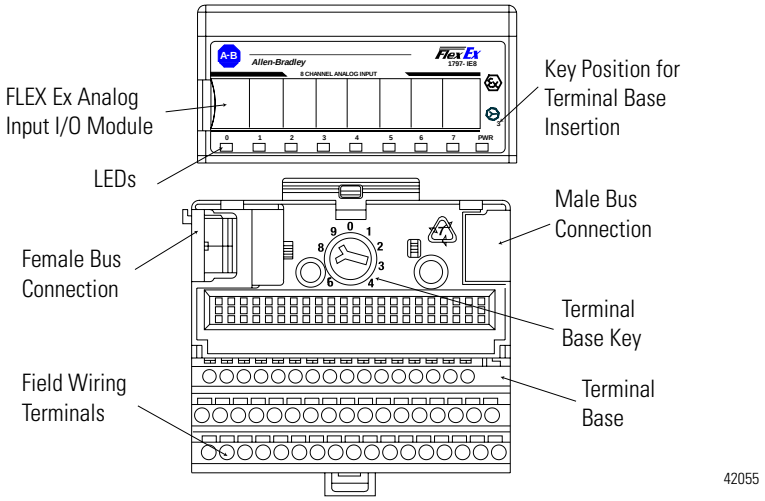

IMPORTANT A terminal base may or may not have an I/O module installed.

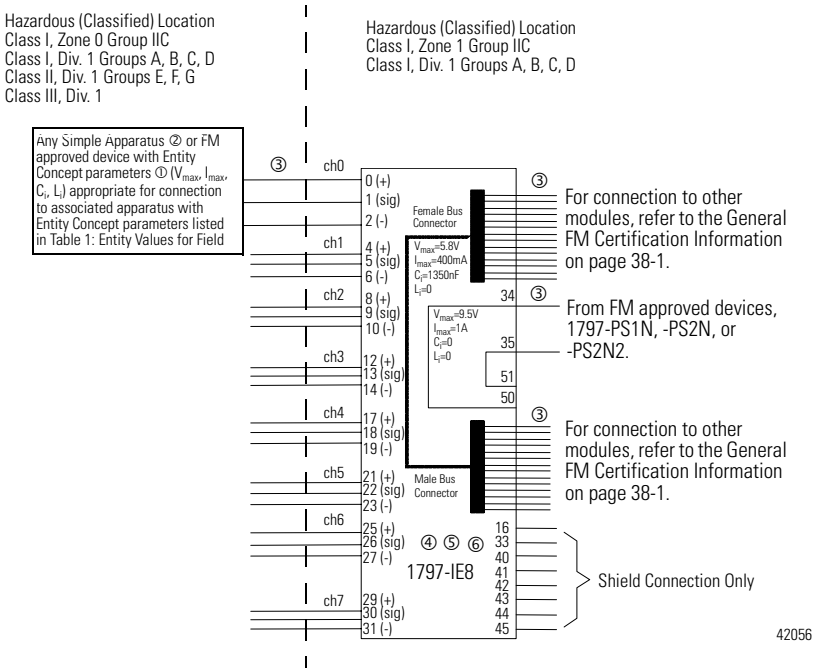

Table 2: Flexbus Entity Values Which are Allowed for the Next FLEX Ex I/O Module

Terminals	V_t (V)	I_t (mA)	Groups	C_a (μF)	L_a (μH)
Male Bus Connector	5.8	400	A-G	3.0	3.0

Table 3: Flexbus Entity Values for this Module

Note: Any combination of up to eight FLEX Ex I/O modules may be attached on a flexbus.

Terminals	V_{max} (V)	I_{max} (mA)	Groups	C_i (μF)	L_i (μH)
Female Bus Connector	5.8	400	A-G	1.35	0

① The entity concept allows interconnection of intrinsically safe apparatus with associated apparatus not specifically examined in combination as a system when the approved values of V_{oc} and I_{sc} or V_t and I_t of the associated apparatus are less than or equal to V_{max} and I_{max} of the intrinsically safe apparatus and the approved values of C_a and L_a of the associated apparatus are greater than C_i + C_{cable} and L_i + L_{cable} respectively for the intrinsically safe apparatus.

② Simple apparatus is defined as a device which neither generates nor stores more than 1.2V, 0.1A, 20μJ, or 25mW.

③ Wiring methods must be in accordance with the National Electric Code, ANSI/NFPA 70, Article 504 and 505. For additional information refer to ANSI/ISA RP12.6.

④ This module, 1797-IE8, must be used with terminal base 1797-TB3 or 1797-TB3S.

⑤ Terminals 3, 7, 11, 15, 20, 24, 28, 32, 36-39, and 46-49 shall not be connected.

⑥ WARNING: Substitution of components may impair intrinsic safety.

Notes:

1797-IE8H FLEX Ex 8 Input HART Analog Module

Inputs

Each input can be operated from an analog field device signal. **Do not apply any non-intrinsically safe signals to this module.**

The channels in this module are electrically connected to each other and have a common plus-line.

IMPORTANT When interconnecting several lines, you must consider the total accumulated power and check for intrinsic safety.

Wiring to a 1797-TB3 or -TB3S Terminal Base Unit

Connect wiring to the terminal base as shown below.

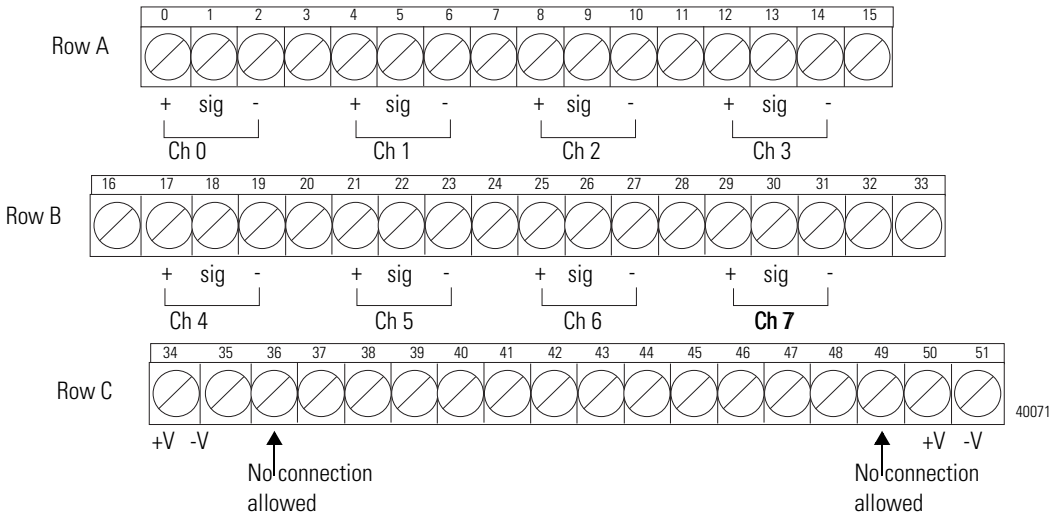

ATTENTION Do not use any unused terminals on this terminal base unit. Using these terminals as supporting terminals can result in damage to the module and/or unintended operation of your system.

Intrinsically Safe Specifications

For a full list of specifications, refer to FLEX Ex 8 Input Analog Module Installation Instructions, publication 1797-5.5.

Operating Temperature	-20 to +70°C (-4 to +158°F)
Agency Certification	Class I Division 1 Groups A-D T4 Class I Zone 1 AEx ib/[ia] IIC T4
Certificates	FM Certificate Number 3009806 FM

FM I/O Entity Parameters

Wiring Methods

- Wiring method 1 - Each channel is wired separately.
- Wiring method 2 - Multiple channels in one cable, providing each channel is separated in accordance with the National Electric Code (NEC).

Table 1: Entity Values for Field Device Connections

Wiring Method	Channel	Terminals	V_{oc} (V)	I_{sc} (mA)	V_t (V)	I_t (mA)	Groups	C_a (μF)	L_a (mH)
1 and 2	Any one channel e.g. ch0	0(+), 1(sig), 2(-)	24.4	92.5	-	-	A, B	0.12	4.0
							C, E	0.35	12.0
							D, F, G	0.95	32.0
		1(sig), 2(-)	24.4	92.5	28	110	A, B	0.12	4.0
							C, E	0.35	12.0
							D, F, G	0.95	32.0

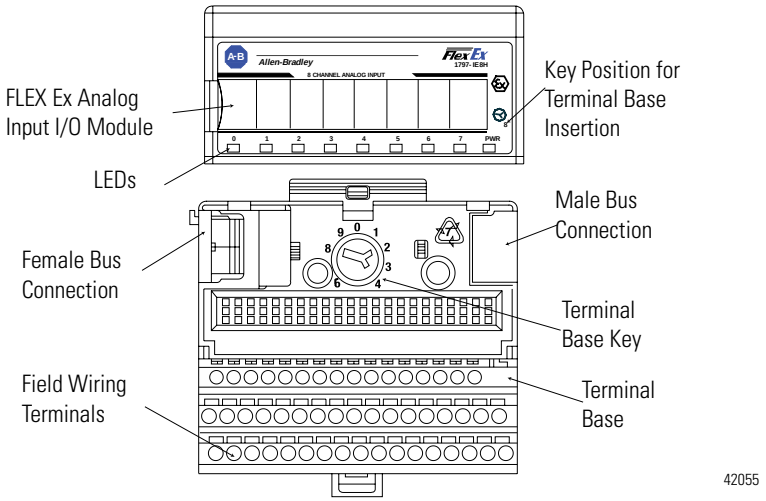

IMPORTANT A terminal base may or may not have an I/O module installed.

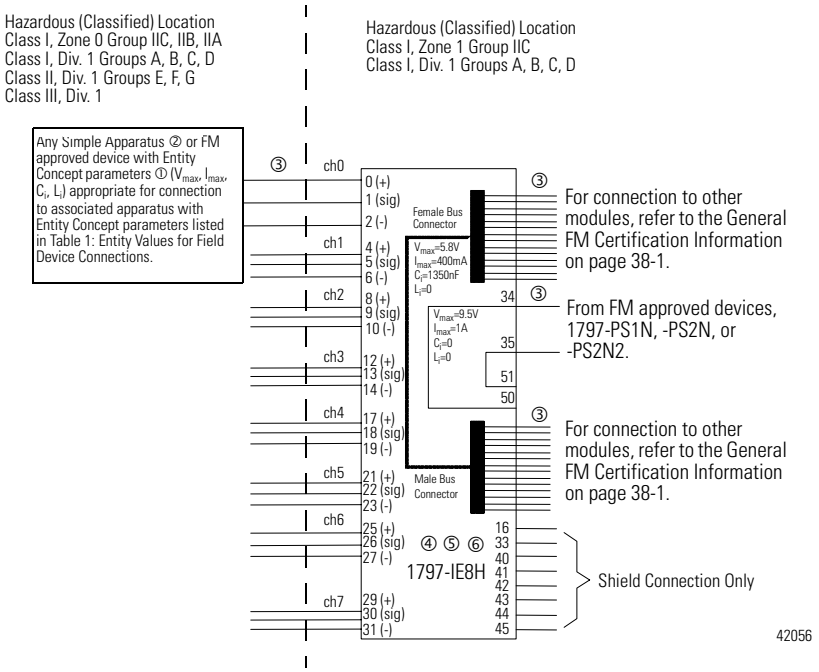

Table 2: Flexbus Entity Values Which are Allowed for the Next FLEX Ex I/O Module

Terminals	V_t (V)	I_t (mA)	Groups	C_a (μF)	L_a (μH)
Male Bus Connector	5.8	400	A-G	3.0	3.0

Table 3: Flexbus Entity Values for this Module

Note: Any combination of up to eight FLEX Ex I/O modules may be attached on a flexbus.

Terminals	V_{max} (V)	I_{max} (mA)	Groups	C_i (μF)	L_i (μH)
Female Bus Connector	5.8	400	A-D	1.35	0

① The entity concept allows interconnection of intrinsically safe apparatus with associated apparatus not specifically examined in combination as a system when the approved values of V_{oc} and I_{sc} or V_t and I_t of the associated apparatus

are less than or equal to V_{max} and I_{max} of the intrinsically safe apparatus and the approved values of C_a and L_a of the associated apparatus are greater than C_i + C_{cable} and L_i + L_{cable} respectively for the intrinsically safe apparatus.

② Simple apparatus is defined as a device which neither generates nor stores more than 1.2V, 0.1A, 20µJ, or 25mW.

③ Wiring methods must be in accordance with the National Electric Code, ANSI/NFPA 70, Article 504 and 505. For additional information refer to ANSI/ISA RP12.6.

④ This module, 1797-IE8H, must be used with terminal base 1797-TB3 or 1797-TB3S.

⑤ Terminals 3, 7, 11, 15, 20, 24, 28, 32, 36-39, and 46-49 shall not be connected.

⑥ WARNING: Substitution of components may impair intrinsic safety.

1797-IE8NF FLEX Ex 8 Input Analog Module with Noise Filter

Inputs

Each input can be operated from an analog field device signal. **Do not apply any non-intrinsically safe signals to this module.**

The channels in this module are electrically connected to each other and have a common plus-line.

IMPORTANT When interconnecting several lines, you must consider the total accumulated power and check for intrinsic safety.

Wiring to a 1797-TB3 or -TB3S Terminal Base Unit

Connect wiring to the terminal base as shown below.

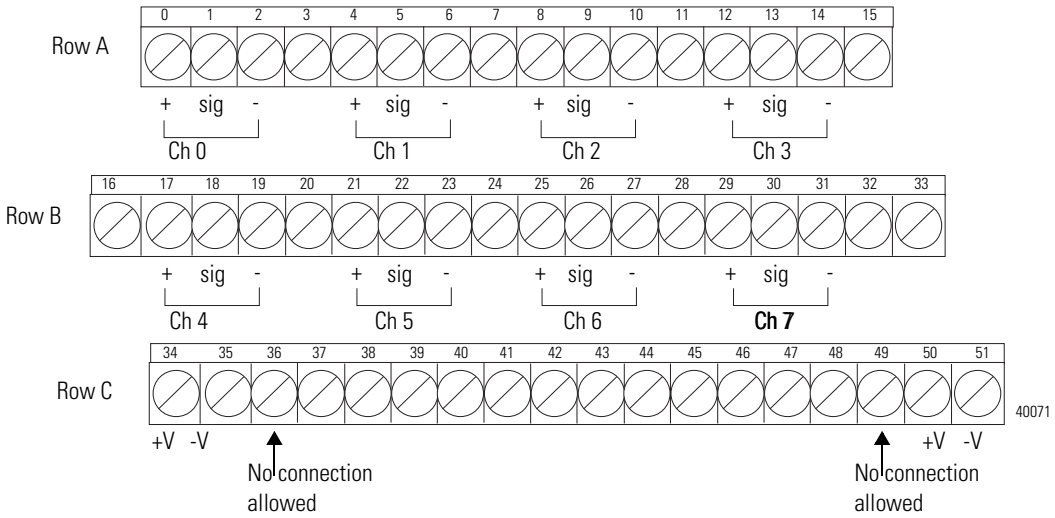

ATTENTION Do not use any unused terminals on this terminal base unit. Using these terminals as supporting terminals can result in damage to the module and/or unintended operation of your system.

Intrinsically Safe Specifications

For a full list of specifications, refer to FLEX Ex 8 Input Analog Module with Noise Filter Installation Instructions, publication 1797-5.31.

Operating Temperature	-20 to +70°C (-4 to +158°F)
Agency Certification	Class I Division 1 Groups A-D T4 Class I Zone 1 AEx ib/[ia] IIC T4
Certificates	FM Certificate Number 3009806 FM

FM I/O Entity Parameters

Wiring Methods

- Wiring method 1 - Each channel is wired separately.
- Wiring method 2 - Multiple channels in one cable, providing each channel is separated in accordance with the National Electric Code (NEC).

Table 1: Entity Values for Field Device Connections

Wiring Method	Channel	Terminals	V_{oc} (V)	I_{sc} (mA)	V_t (V)	I_t (mA)	Groups	C_a (µF)	L_a (mH)
1 and 2	Any one channel e.g. ch0	0(+), 1(sig)	23.7	92.5	-	-	A, B	0.15	4.0
							C, E	0.45	12.0
							D, F, G	1.20	32.0
		1(sig), 2(-)	5	1.0	-	-	A, B	100	1000
							C, E	300	1000
							D, F, G	800	1000
		0(+), 1(sig), 2(-)	-	-	23.7	93.5	A, B	0.15	4.0
							C, E	0.45	12.0
							D, F, G	1.20	32.0

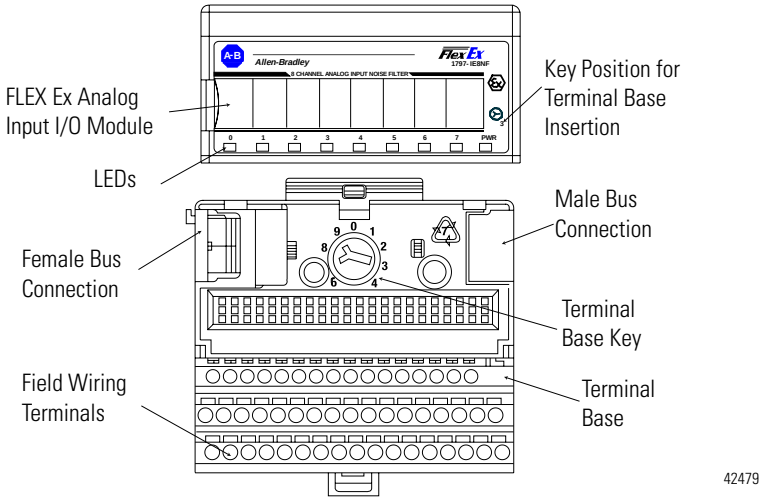

IMPORTANT A terminal base may or may not have an I/O module installed.

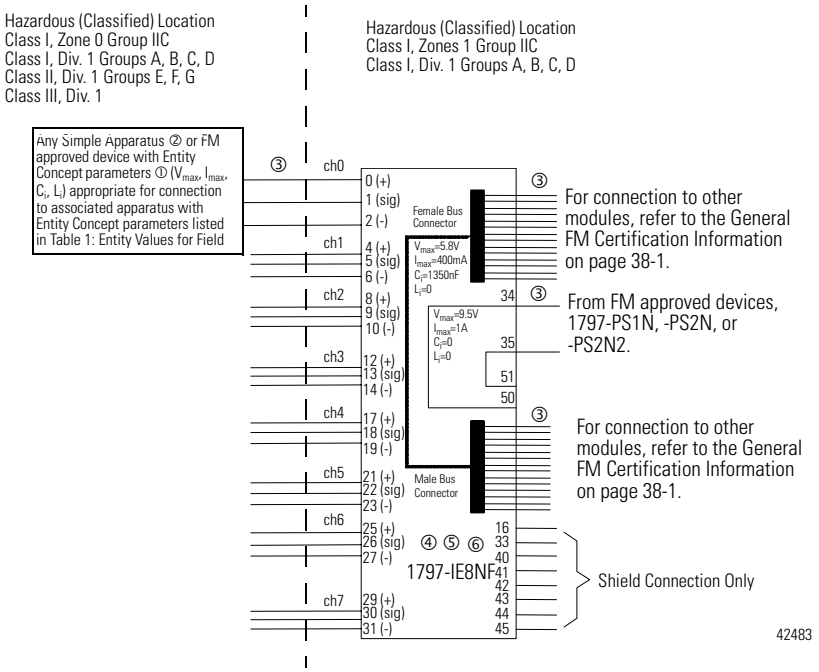

Table 2: Flexbus Entity Values Which are Allowed for the Next FLEX Ex I/O Module

Terminals	V_t (V)	I_t (mA)	Groups	C_a (μF)	L_a (μH)
Male Bus Connector	5.8	400	A-G	3.0	3.0

Table 3: Flexbus Entity Values for this Module

Note: Any combination of up to eight FLEX Ex I/O modules may be attached on a flexbus.

Terminals	V_{max} (V)	I_{max} (mA)	Groups	C_i (μF)	L_i (μH)
Female Bus Connector	5.8	400	A-G	1.35	0

① The entity concept allows interconnection of intrinsically safe apparatus with associated apparatus not specifically examined in combination as a system when the approved values of V_{oc} and I_{sc} or V_t and I_t of the associated apparatus are less than or equal to V_{max} and I_{max} of the intrinsically safe apparatus and the approved values of C_a and L_a of the associated apparatus are greater than C_i + C_{cable} and L_i + L_{cable} respectively for the intrinsically safe apparatus.

② Simple apparatus is defined as a device which neither generates nor stores more than 1.2V, 0.1A, 20μJ, or 25mW.

③ Wiring methods must be in accordance with the National Electric Code, ANSI/NFPA 70, Article 504 and 505. For additional information refer to ANSI/ISA RP12.6.

④ This module, 1797-IE8NF, must be used with terminal base 1797-TB3 or 1797-TB3S.

⑤ Terminals 3, 7, 11, 15, 20, 24, 28, 32, 36-39, and 46-49 shall not be connected.

⑥ WARNING: Substitution of components may impair intrinsic safety.

Notes:

1797-OE8 FLEX Ex 8 Output Analog Module

Outputs

Each output channel can operate an analog field device. **Do not apply any non-intrinsically safe signals to this module.**

The channels in this module are electrically connected to each other.

Wiring to a 1797-TB3 or -TB3S Terminal Base Unit

Connect wiring to the terminal base as shown below.

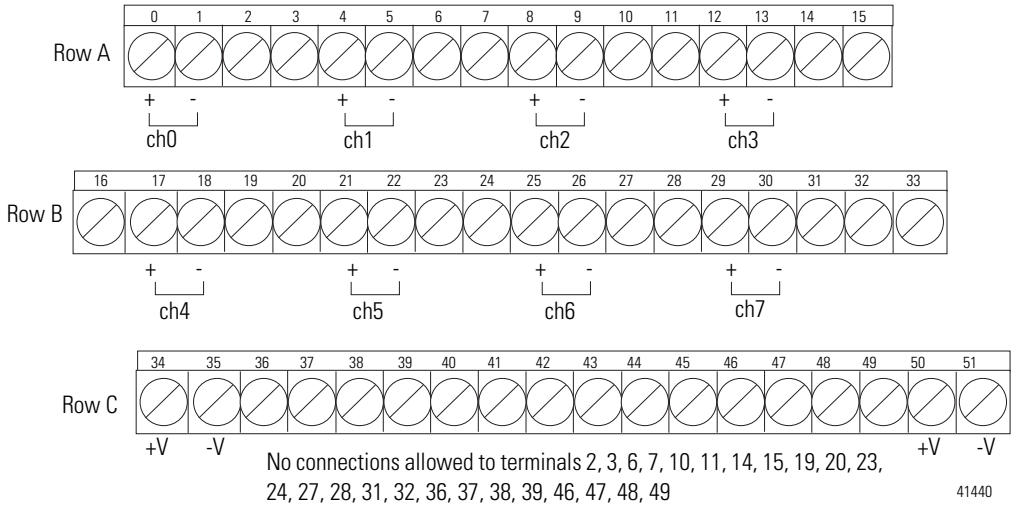

ATTENTION

Do not use any unused terminals on this terminal base unit. Using these terminals as supporting terminals can result in damage to the module and/or unintended operation of your system.

Intrinsically Safe Specifications

For a full list of specifications, refer to FLEX Ex 8 Output Analog Module Installation Instructions, publication 1797-5.3.

Operational Temperature	-20 to +70°C (-4 to +158°F)
Agency Certification	Class I Division 1 Groups A-D T4 Class I Zone 1 AEx ib/[ia] IIC T4
Certificates	FM Certificate Number 3009806 FM

FM I/O Entity Parameters

Wiring Methods

- Wiring method 1 - Each channel is wired separately.
- Wiring method 2 - Multiple channels in one cable, providing each channel is separated in accordance with the National Electric Code (NEC).

Table 1: Entity Values for Field Device Connections

Wiring Method	Channel	Terminals	V_{oc} (V)	I_{sc} (mA)	V_t (V)	I_t (mA)	Groups	C_a (µF)	L_a (mH)
1 and 2	Any one channel e.g. ch0	0(+), 1(sig)	21.0	100.0	-	-	A, B	0.20	3.5
							C, E	0.60	10.5
							D, F, G	1.60	28.0

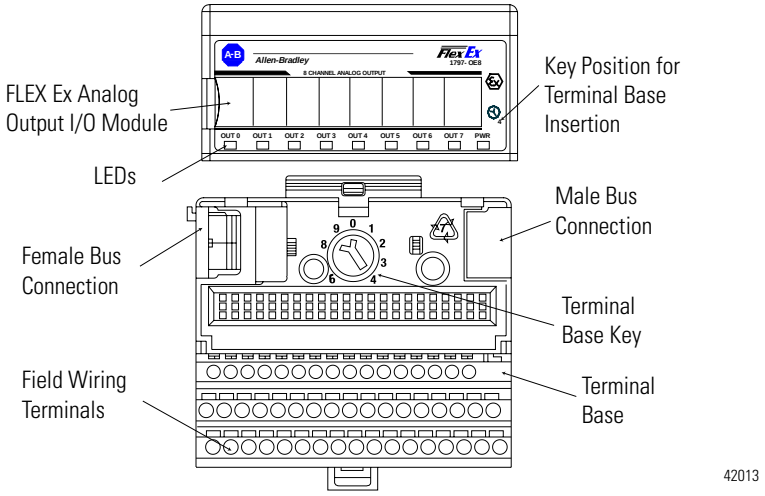

IMPORTANT A terminal base may or may not have an I/O module installed.

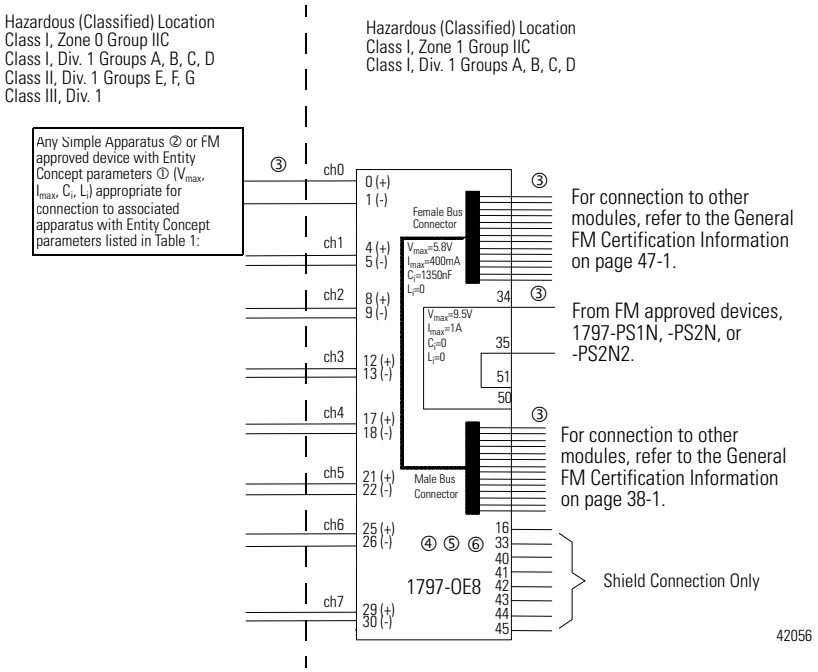

Table 2: Flexbus Entity Values Which are Allowed for the Next FLEX Ex I/O Module

Terminals	V_t (V)	I_t (mA)	Groups	C_a (μF)	L_a (μH)
Male Bus Connector	5.8	400	A-G	3.0	3.0

Table 3: Flexbus Entity Values for this Module

Note: Any combination of up to eight FLEX Ex I/O modules may be attached on a flexbus.

Terminals	V_{max} (V)	I_{max} (mA)	Groups	C_i (μF)	L_i (μH)
Female Bus Connector	5.8	400	A-G	1.35	0

① The entity concept allows interconnection of intrinsically safe apparatus with associated apparatus not specifically examined in combination as a system when the approved values of V_{oc} and I_{sc} or V_t and I_t of the associated apparatus are less than or equal to V_{max} and I_{max} of the intrinsically safe apparatus and the approved values of C_a and L_a of the associated apparatus are greater than C_i + C_{cable} and L_i + L_{cable} respectively for the intrinsically safe apparatus.

② Simple apparatus is defined as a device which neither generates nor stores more than 1.2V, 0.1A, 20µJ, or 25mW.

③ Wiring methods must be in accordance with the National Electric Code, ANSI/NFPA 70, Article 504 and 505. For additional information refer to ANSI/ISA RP12.6.

④ This module, 1797-OE8, must be used with terminal base 1797-TB3 or 1797-TB3S.

⑤ Terminals 2, 3, 6, 7, 10, 11, 14, 15, 19, 20, 23, 24, 27, 28, 31, 32, 36-38, and 46-49 shall not be connected.

⑥ WARNING: Substitution of components may impair intrinsic safety.

1797-OE8H FLEX Ex 8 Output HART Analog Module

Outputs

Each output channel can operate an analog field device. **Do not apply any non-intrinsically safe signals to this module.**

The channels in this module are electrically connected to each other.

Wiring to a 1797-TB3 or -TB3S Terminal Base Unit

Connect wiring to the terminal base as shown below.

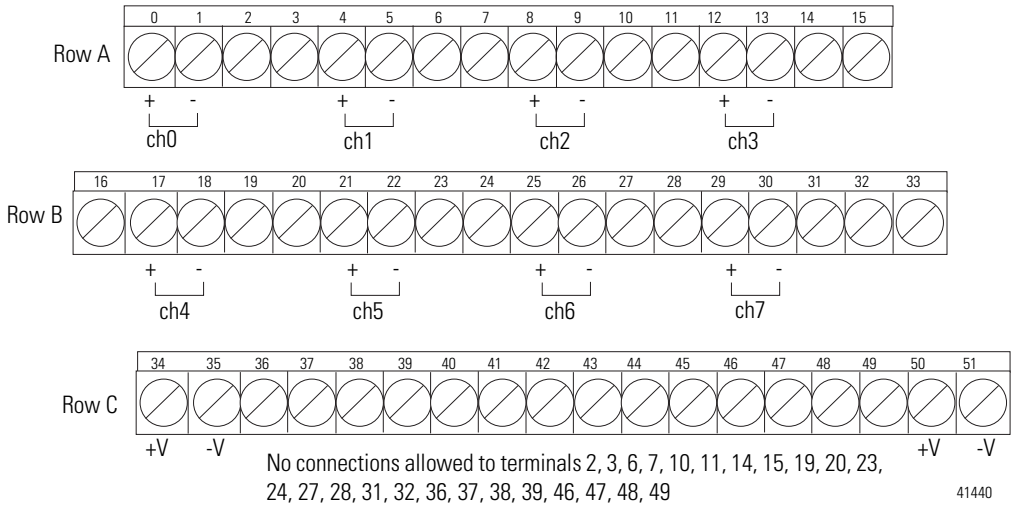

ATTENTION

Do not use any unused terminals on this terminal base unit. Using these terminals as supporting terminals can result in damage to the module and/or unintended operation of your system.

Intrinsically Safe Specifications

For a full list of specifications, refer to FLEX Ex 8 Output Analog Module Installation Instructions, publication 1797-5.3.

Operational Temperature	-20 to +70°C (-4 to +158°F)
Agency Certification	Class I Division 1 Groups A-D T4 Class I Zone 1 AEx ib/[ia] IIC T4
Certificates	FM Certificate Number 3009806 FM

FM I/O Entity Parameters

Wiring Methods

- Wiring method 1 - Each channel is wired separately.
- Wiring method 2 - Multiple channels in one cable, providing each channel is separated in accordance with the National Electric Code (NEC).

Table 1: Entity Values for Field Device Connections

Wiring Method	Channel	Terminals	V_{oc} (V)	I_{sc} (mA)	V_t (V)	I_t (mA)	Groups	C_a (µF)	L_a (mH)
1 and 2	Any one channel e.g. ch0	0(+), 1(sig)	21.0	100.0	-	-	A, B	0.20	3.5
							C, E	0.60	10.5
							D, F, G	1.60	28.0

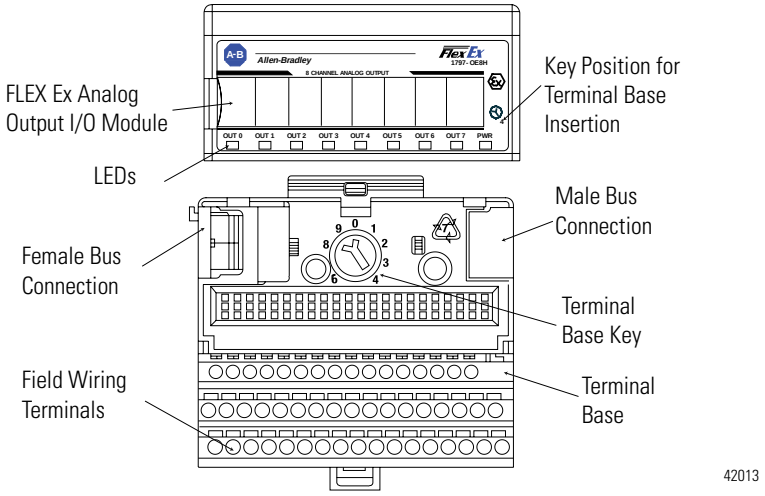

IMPORTANT A terminal base may or may not have an I/O module installed.

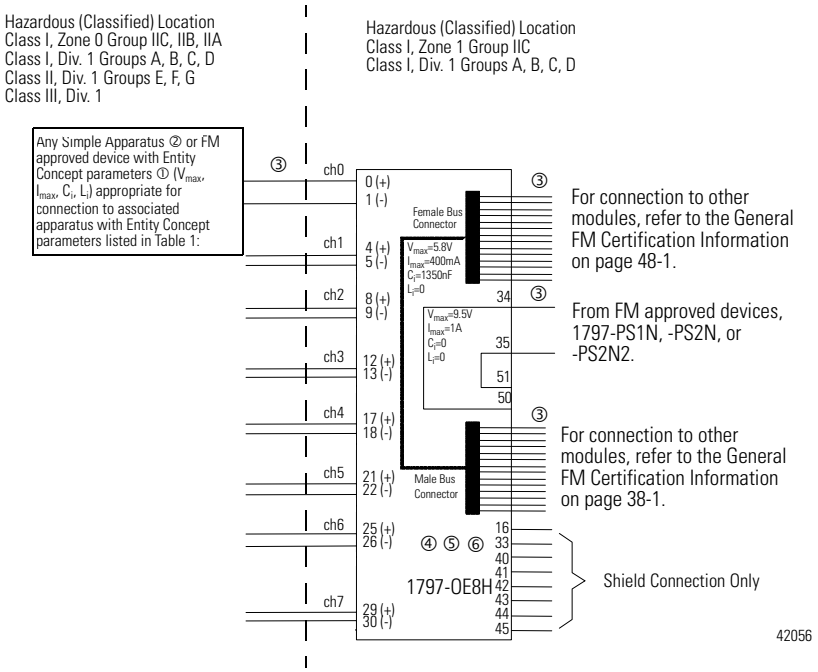

Table 2: Flexbus Entity Values Which are Allowed for the Next FLEX Ex I/O Module

Terminals	V_t (V)	I_t (mA)	Groups	C_a (µF)	L_a (µH)
Male Bus Connector	5.8	400	A-G	3.0	3.0

Table 3: Flexbus Entity Values for this Module

Note: Any combination of up to eight FLEX Ex I/O modules may be attached on a flexbus.

Terminals	V_{max} (V)	I_{max} (mA)	Groups	C_i (µF)	L_i (µH)
Female Bus Connector	5.8	400	A-D	1.35	0

① The entity concept allows interconnection of intrinsically safe apparatus with associated apparatus not specifically examined in combination as a system when the approved values of V_{oc} and I_{sc} or V_t and I_t of the associated apparatus are less than or equal to V_{max} and I_{max} of the intrinsically safe apparatus and the approved values of C_a and L_a of the associated apparatus are greater than C_i + C_{cable} and L_i + L_{cable} respectively for the intrinsically safe apparatus.

② Simple apparatus is defined as a device which neither generates nor stores more than 1.2V, 0.1A, 20µJ, or 25mW.

③ Wiring methods must be in accordance with the National Electric Code, ANSI/NFPA 70, Article 504 and 505. For additional information refer to ANSI/ISA RP12.6.

④ This module, 1797-OE8H, must be used with terminal base 1797-TB3 or 1797-TB3S.

⑤ Terminals 2, 3, 6, 7, 10, 11, 14, 15, 19, 20, 23, 24, 27, 28, 31, 32, 36-38, and 46-49 shall not be connected.

⑥ WARNING: Substitution of components may impair intrinsic safety.

1797-IRT8 FLEX Ex Thermocouple/RTD Input Module

Inputs

Each input can be operated from a thermocouple (TC) or resistance temperature detector (RTD). **Do not apply any non-intrinsically safe signals to this module.**

The channels in this module are electrically connected to each other and have a common plus-line.

IMPORTANT When interconnecting several lines, you must consider the total accumulated power and check for intrinsic safety.

Wiring to a 1797-TB3 or -TB3S Terminal Base Unit

Connect wiring to the terminal base as shown below.

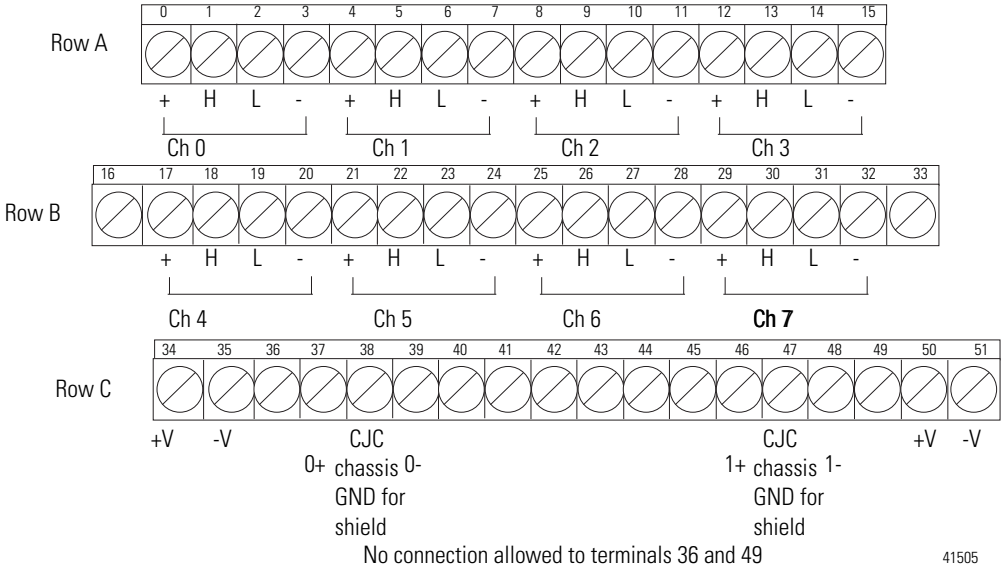

ATTENTION Do not use any unused terminals on this terminal base unit. Using these terminals as supporting terminals can result in damage to the module and/or unintended operation of your system.

Intrinsically Safe Specifications

For a full list of specifications, refer to FLEX Ex Thermocouple/RTD Input Module Installation Instructions, publication 1797-5.4.

Operational Temperature	-20 to +70°C (-4 to 158°F)
Agency Certification	Class I Division 1 Groups A-D T4 Class I Zone 1 AEx ib/[ia] IIC T4
Certificates	FM Certificate Number 3009806 FM

FM I/O Entity Parameters

Wiring Methods

- Wiring method 1 - Each channel is wired separately.
- Wiring method 2 - Multiple channels in one cable, providing each channel is separated in accordance with the National Electric Code (NEC).

Table 1: Entity Values for Field Device Connections

Wiring Method	Channel	Terminals	V_{oc} (V)	I_{sc} (mA)	V_t (V)	I_t (mA)	Groups	C_a (μF)	L_a (mH)
1 and 2	Any one channel e.g. ch0	0(+), 1(H), 2(L), 3(-)	9.0	37.0	-	-	A, B	3.0	20.0
							C, E	9.0	60.0
							D, F, G	24.0	160.0
		37, 38, 39 (CJC0) or 46, 47, 48 (CJC1)	9.0	1.0	-	-	A, B	3.0	1000.0
							C, E	9.0	1000.0
							D, F, G	24.0	1000.0
		0(+), 1(H), 2(L), 3(-) 37, 38, 39 (CJC0) or 46, 47, 48 (CJC1)	-	-	9.0	38.0	A, B	3.0	20.0
							C, E	9.0	60.0
							D, F, G	24.0	160.0

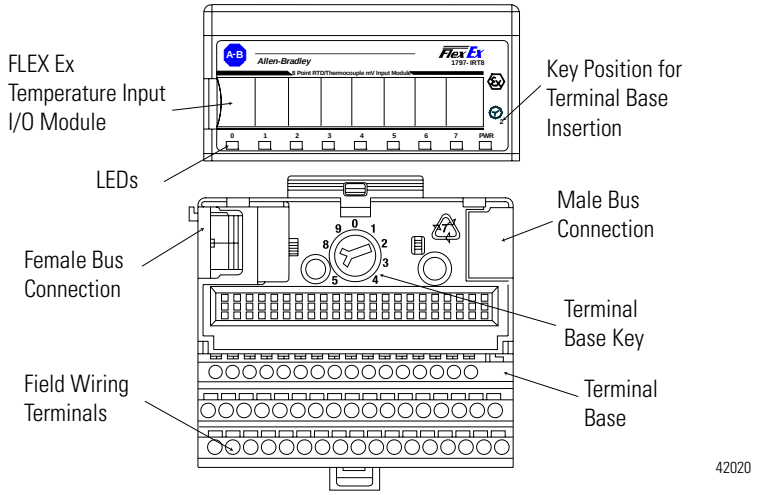

IMPORTANT A terminal base may or may not have an I/O module installed.

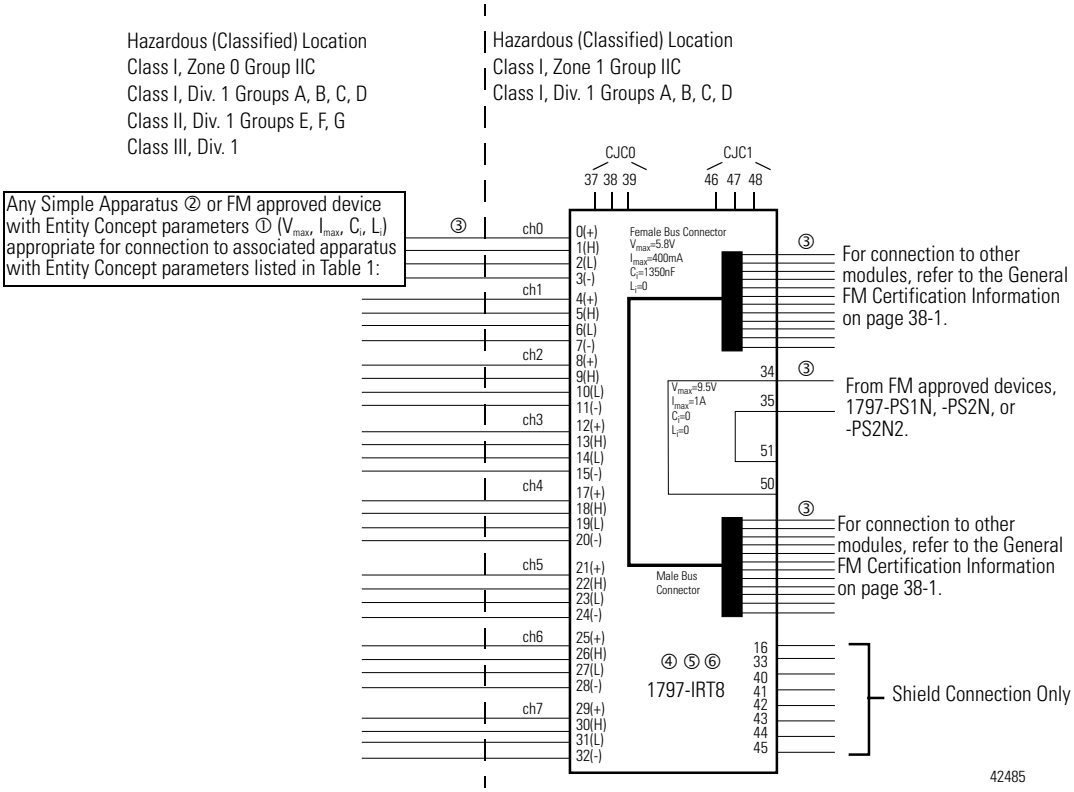

Table 2: Flexbus Entity Values Which are Allowed for the Next FLEX Ex I/O Module

Terminals	V_t (V)	I_t (mA)	Groups	C_a (μF)	L_a (μH)
Male Bus Connector	5.8	400	A-G	3.0	3.0

Table 3: Flexbus Entity Values for this Module

Note: Any combination of up to eight FLEX Ex I/O modules may be attached on a flexbus.

Terminals	V_{max} (V)	I_{max} (mA)	Groups	C_i (μF)	L_i (μH)
Female Bus Connector	5.8	400	A-G	1.35	0

① The entity concept allows interconnection of intrinsically safe apparatus with associated apparatus not specifically examined in combination as a system when the approved values of V_{oc} and I_{sc} or V_t and I_t of the associated apparatus are less than or equal to V_{max} and I_{max} of the intrinsically safe apparatus and the approved values of C_a and L_a of the associated apparatus are greater than C_i + C_{cable} and L_i + L_{cable} respectively for the intrinsically safe apparatus.

② Simple apparatus is defined as a device which neither generates nor stores more than 1.2V, 0.1A, 20μJ, or 25mW.

③ Wiring methods must be in accordance with the National Electric Code, ANSI/NFPA 70, Article 504 and 505. For additional information refer to ANSI/ISA RP12.6.

④ This module, 1797-IRT8, must be used with terminal base 1797-TB3 or 1797-TB3S.

⑤ Terminals 36 and 49 shall not be connected.

⑥ WARNING: Substitution of components may impair intrinsic safety.

1797-IJ2 FLEX Ex Frequency Input Module

Inputs

The frequency input module has 2 input channels. Each input can accept inputs from magnetic pickups or proximity probes. Each input channel has 2 input selections: frequency input or gate input. **Do not apply any non-intrinsically safe signals to this module.**

The channels in this module are electrically connected to each other.

IMPORTANT When interconnecting several lines, you must consider the total accumulated power and check for intrinsic safety.

Wiring to a 1797-TB3 or -TB3S Terminal Base Unit

Connect wiring to the terminal base as shown below.

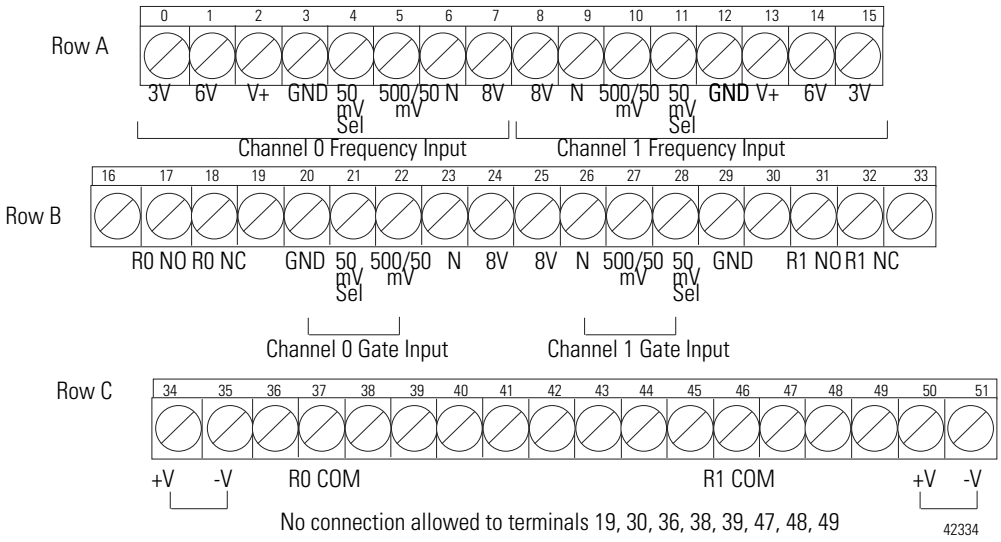

ATTENTION Do not use any unused terminals on this terminal base unit. Using these terminals as supporting terminals can result in damage to the module and/or unintended operation of your system.

Intrinsically Safe Specifications

For a full list of specifications, refer to FLEX Ex Frequency Input Module Installation Instructions, publication 1797-5.7.

Operating Temperature	-20 to +70°C (-4 to +158°F)
Agency Certification	Class I Division 1 Groups A-D T4 Class I Zone 1 AEx ib/[ia] IIC T4
Certificates	FM Certificate Number 3009806 FM

FM Input I/O Entity Parameters

Wiring Methods

- Wiring method 1 - Each channel is wired separately.
- Wiring method 2 - Multiple channels in one cable, providing each channel is separated in accordance with the National Electric Code (NEC).

Table 1: Entity Values for Field Device Connections

Wiring Method	Channel	Terminals	V_{oc} (V)	I_{sc} (mA)	V_t (V)	I_t (mA)	Groups	C_a (μF)	L_a (mH)
1 and 2	Any one channel	6, 7; 9, 8; 23, 24 26, 25	14.7	15.0	-	-	A, B	0.65	130.0
							C, E	1.95	390.0
							D, F, G	5.20	1040.0
1 and 2	Any one channel	5, 3; 10, 12; 22, 20; 27, 29	14.7	10.0	-	-	A, B	0.65	300.0
							C, E	1.95	900.0
							D, F	5.20	2400.0
1 and 2	Any one channel	5, 3, 6, 4; 10, 12, 9, 11; 22, 20, 21, 23; 27, 29, 26, 28	14.7	10.0	-	-	A	0.65	300.0
							C, E	1.95	900.0
							D, F, G	5.20	2400.0
1 and 2	Any one channel	0, 2, 3; 1, 2, 3; 14, 12, 13; 15, 12, 13	26.5	82.0	-	-	A, B	0.13	4.5
							C, E	0.39	13.5
							D, F, G	1.04	36.0

Wiring Method	Channel	Terminals	V_{max} (V)	I_{max} (mA)	Groups	C_i (μF)	L_i (mH)
1 and 2	Any one channel	17, 18, 37 or 31, 32, 46	28	93.0	A, B	0	0
					C, E	0	0
					D, F, G	0	0

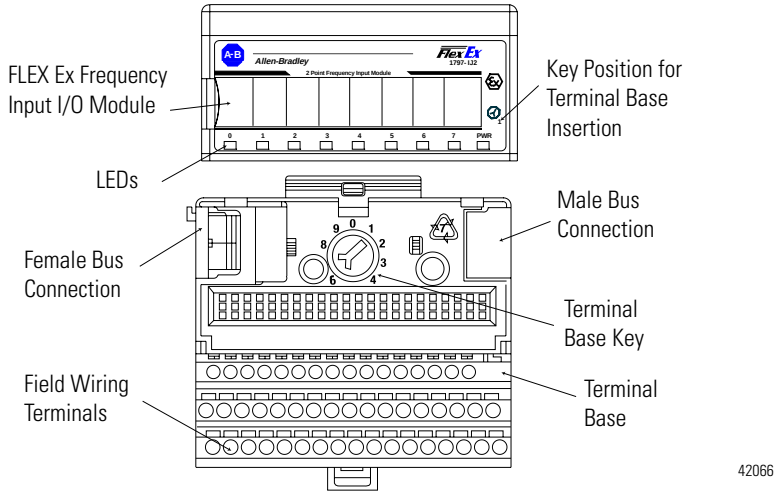

IMPORTANT A terminal base may or may not have an I/O module installed.

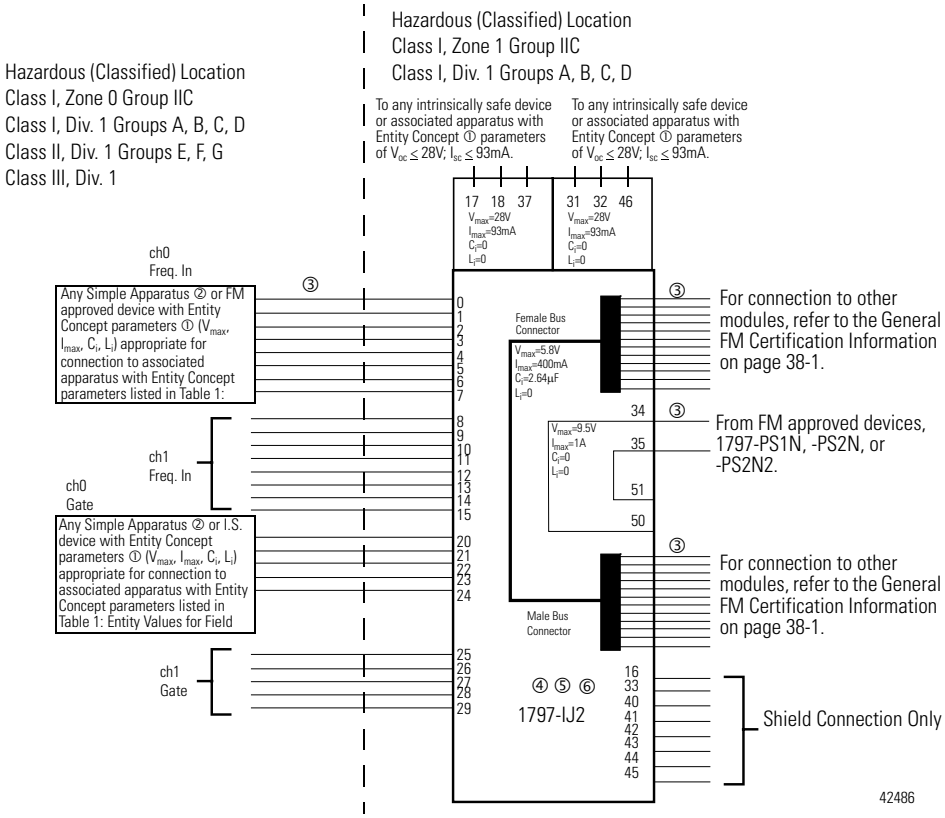

Table 2: Flexbus Entity Values Which are Allowed for the Next FLEX Ex I/O Module

Terminals	V_t (V)	I_t (mA)	Groups	C_a (μF)	L_a (μH)
Male Bus Connector	5.8	400	A-G	3.0	3.0

Table 3: Flexbus Entity Values for this Module

Note: Any combination of up to eight FLEX Ex I/O modules may be attached on a flexbus.

Terminals	V_{max} (V)	I_{max} (mA)	Groups	C_i (μF)	L_i (μH)
Female Bus Connector	5.8	400	A-G	2.64	0

① The entity concept allows interconnection of intrinsically safe apparatus with associated apparatus not specifically examined in combination as a system when the approved values of V_{oc} and I_{sc} or V_t and I_t of the associated apparatus are less than or equal to V_{max} and I_{max} of the intrinsically safe apparatus and the approved values of C_a and L_a of the associated apparatus are greater than C_i + C_{cable} and L_i + L_{cable} respectively for the intrinsically safe apparatus.

② Simple apparatus is defined as a device which neither generates nor stores more than 1.2V, 0.1A, 20μJ, or 25mW.

③ Wiring methods must be in accordance with the National Electric Code, ANSI/NFPA 70, Article 504 and 505. For additional information refer to ANSI/ISA RP12.6.

④ This module, 1797-IJ2, must be used with terminal base 1797-TB3 or 1797-TB3S.

⑤ Terminals 19, 30, 36, 38-39, and 47-49 shall not be connected.

⑥ WARNING: Substitution of components may impair intrinsic safety.

1797-PS1N FLEX Ex Power Supply

Installation in Division 1/ Zone 1

The 1797-PS1N power supply has a protection factor of IP66. Refer to the specifications table for the IS module type.

ATTENTION

The power supply cannot be used in an intrinsically safe environment after its outputs have been exposed to non-intrinsically safe signals.

Outputs

The channels in the power supply are electrically connected to each other and have a common +V line.

IMPORTANT

You cannot interconnect lines because of the intrinsic safety requirements.

Typical Wiring Configurations

Terminal Base Assignments

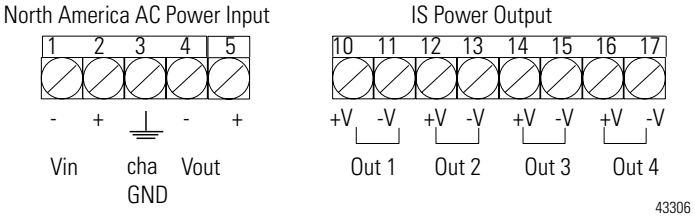

Intrinsically Safe Specifications

For a full list of specifications, refer to FLEX Ex Power Supplies Installation Instructions, publication 1797-5.34.

Specifications	1797-PS1N
Voltage Range	85-250V ac or 120-250V dc
Operational Temperature	-20 to 70°C (-4 to 158°F)
Agency Certification	Mounting - Class I Division 1 Groups B-D T4
	IS Power - Class I Division 1 Groups A-D T4 Class I Zone 1 AEx [ib] IIC
Certificates	FM Certificate Number 3009806 FM

ATTENTION

Once power has been applied, wait 15 minutes after disconnecting before opening cover.

FM I/O Entity Parameters

Wiring Methods

- Wiring method 1 - Each channel is wired separately.
- Wiring method 2 - Multiple channels in one cable, providing each channel is separated in accordance with the National Electric Code (NEC).

Table 1: Entity Values for Field Device Connections

Wiring Method	Channel	Terminals	V_{oc} (V)	I_{sc} (A)	Groups	C_a (μF)	L_a (μH)
1 and 2	Any one channel e.g. ch1	10(+), 11(-)	9.5	1.0	A, B	0.5	8
					C, E	1.5	24
					D, F, G	4.0	64

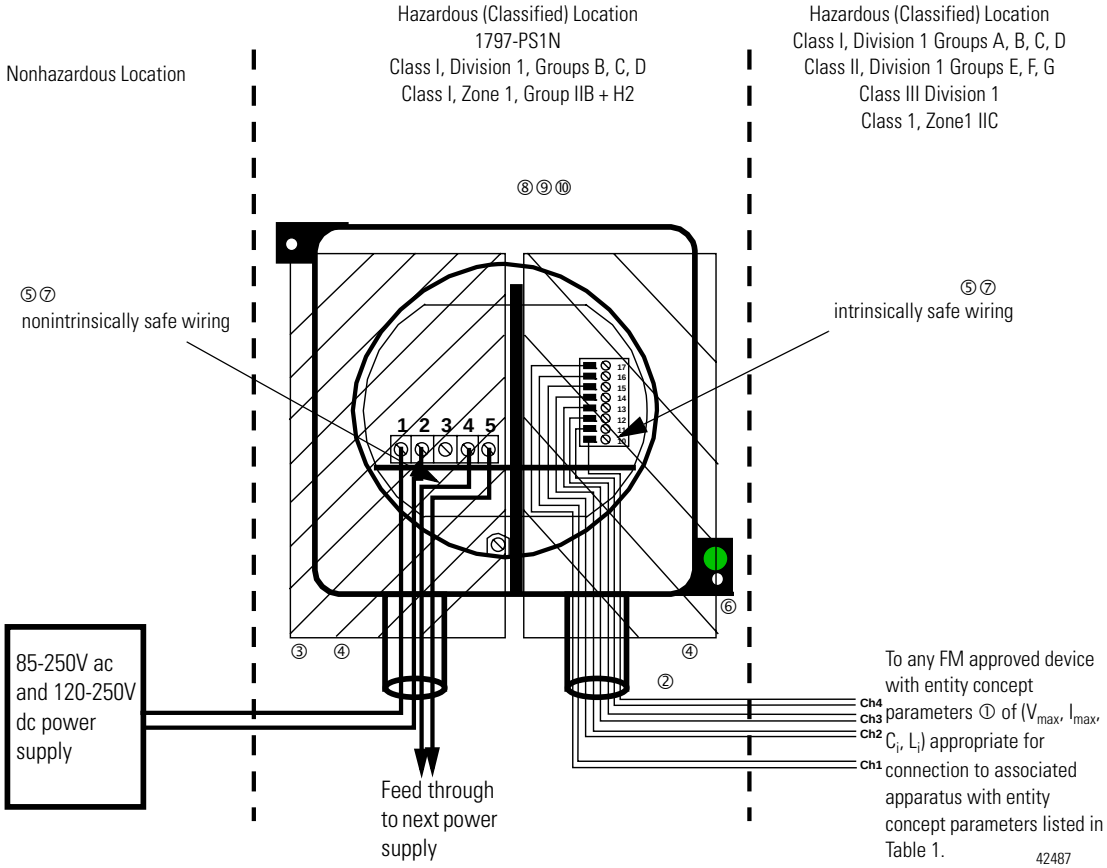

① The entity concept allows interconnection of intrinsically safe apparatus with associated apparatus not specifically examined in combination as a system when the approved values of V_{oc} and I_{sc} of the associated apparatus are less than or equal to V_{max} and I_{max} of the intrinsically safe apparatus and the approved values of C_a and L_a of the associated apparatus are greater than C_i + C_{cable} and L_i + L_{cable} respectively for the intrinsically safe apparatus.

② Wiring methods must be in accordance with the NEC, ANSI/NFPA 70, Article 504 (Divisions) or 505 (Zones).

③ Wiring methods must be in accordance with the NEC, ANSI/NFPA 70, Article 501 (Divisions).

④ Conduit runs must have sealing fittings at the entry of the enclosure.

⑤ The wiring contained within the nonintrinsically safe wiring compartment and the intrinsically safe wiring compartment shall be separated from each other. Care must be taken to guarantee the separation of nonintrinsically safe and intrinsically safe wiring. The partitions within the power supply provide the necessary isolation for the electronics and the wiring, however, extreme care must be taken to guarantee wires are contained within their appropriate compartment and cannot contact any of the electronics.

⑥ WARNING: Substitution of components may impair intrinsic safety.

⑦ Cable must be rated at a minimum of 100°C.

⑧ WARNING: Keep cover tightly closed when circuits are live.

⑨ After disconnecting power supply, wait fifteen minutes before removing cover.

⑩ No live maintenance.

1797-PS2N2 FLEX Ex Power Supply

Installation in Division 1/ Zone 1

The 1797-PS2N2 power supply has a protection factor of IP66. Refer to the specifications table for the IS module type.

ATTENTION

The power supply cannot be used in an intrinsically safe environment after its outputs have been exposed to non-intrinsically safe signals.

Outputs

The channels in the power supply are electrically connected to each other and have a common +V line.

IMPORTANT

You cannot interconnect lines because of the intrinsic safety requirements.

Typical Wiring Configurations

Terminal Base Assignments

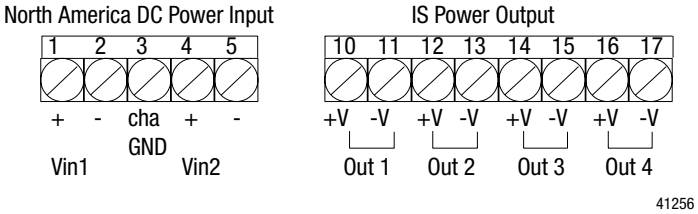

Intrinsically Safe Specifications

For a full list of specifications, refer to FLEX Ex Power Supply Installation Instructions, publication 1797-5.12.

Specifications	1797-PS2N2
Voltage Range	18 to 32V dc
Operational Temperature	-20 to 70°C (-4 to 158°F)
Agency Certification	Mounting - Class I Division 1 Groups B-D T4
	IS Power - Class I Division 1 Groups A-D T4 Class I Zone 1 AEx [ib] IIC
Certificates	FM Certificate Number 3009806 FM

ATTENTION

Once power has been applied, wait 15 minutes after disconnecting before opening cover.

FM I/O Entity Parameters

Wiring Methods

- Wiring method 1 - Each channel is wired separately.
- Wiring method 2 - Multiple channels in one cable, providing each channel is separated in accordance with the National Electric Code (NEC).

Table 1: Entity Values for Field Device Connections

						PS2N	PS2N2	PS2N	PS2N2
Wiring Method	**Channel**	**Terminals**	**V_{oc} (V)**	**I_{sc} (A)**	**Groups**	**C_a (μF)**	**C_a (μF)**	**L_a (μH)**	**L_a (μH)**
1 and 2	Any one channel e.g. ch1	10(+), 11(-)	9.5	1.0	A, B	0.8	0.5	10	8
					C, E	2.4	1.5	30	24
					D, F, G	6.4	4.0	80	64

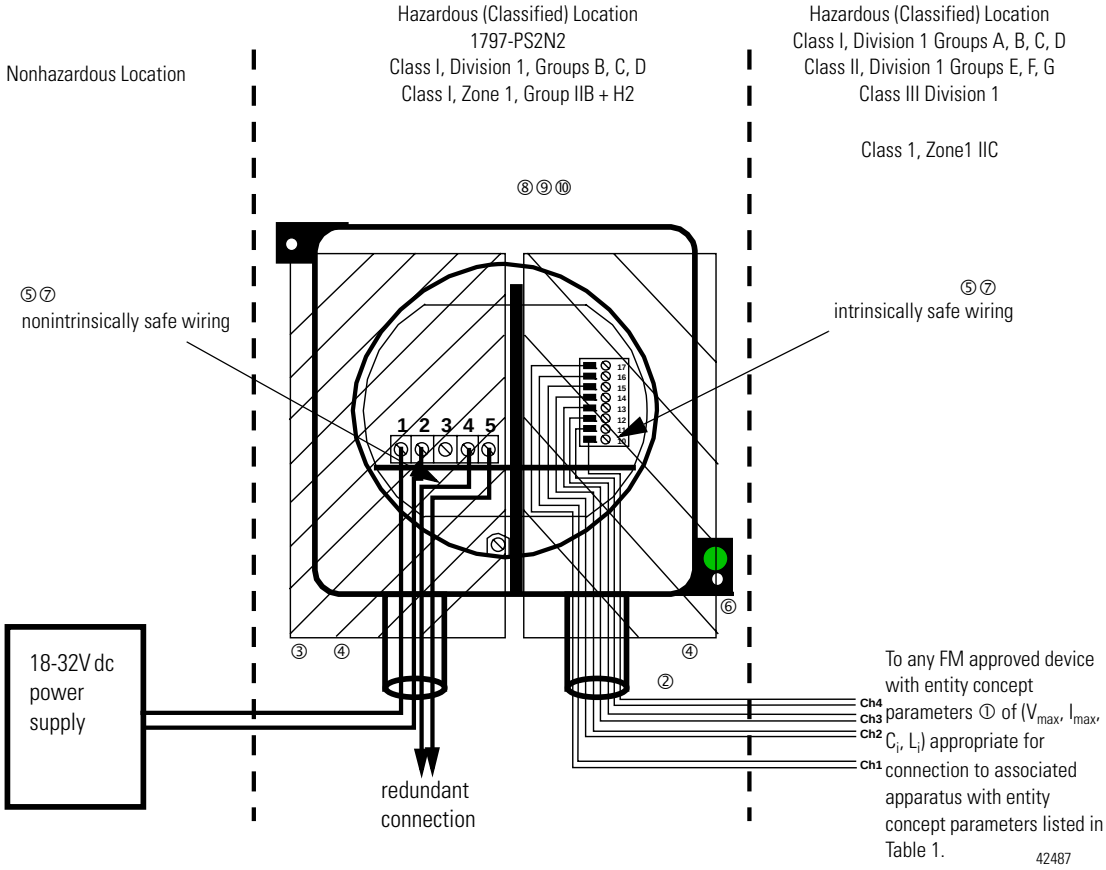

① The entity concept allows interconnection of intrinsically safe apparatus with associated apparatus not specifically examined in combination as a system when the approved values of V_{oc} and I_{sc} of the associated apparatus are less than or equal to V_{max} and I_{max} of the intrinsically safe apparatus and the approved values of C_a and L_a of the associated apparatus are greater than C_i + C_{cable} and L_i + L_{cable} respectively for the intrinsically safe apparatus.

② Wiring methods must be in accordance with the NEC, ANSI/NFPA 70, Article 504 (Divisions) or 505 (Zones).

③ Wiring methods must be in accordance with the NEC, ANSI/NFPA 70, Article 501 (Divisions).

④ Conduit runs must have sealing fittings at the entry of the enclosure.

⑤ The wiring contained within the nonintrinsically safe wiring compartment and the intrinsically safe wiring compartment shall be separated from each other. Care must be taken to guarantee the separation of nonintrinsically safe and intrinsically safe wiring. The partitions within the power supply provide the necessary isolation for the electronics and the wiring, however, extreme care must be taken to guarantee wires are contained within their appropriate compartment and cannot contact any of the electronics.

⑥ WARNING: Substitution of components may impair intrinsic safety.

⑦ Cable must be rated at a minimum of 100°C.

⑧ WARNING: Keep cover tightly closed when circuits are live.

⑨ After disconnecting power supply, wait fifteen minutes before removing cover.

⑩ No live maintenance.

1797-ACNR15 ControlNet Ex Redundant Media Adapter

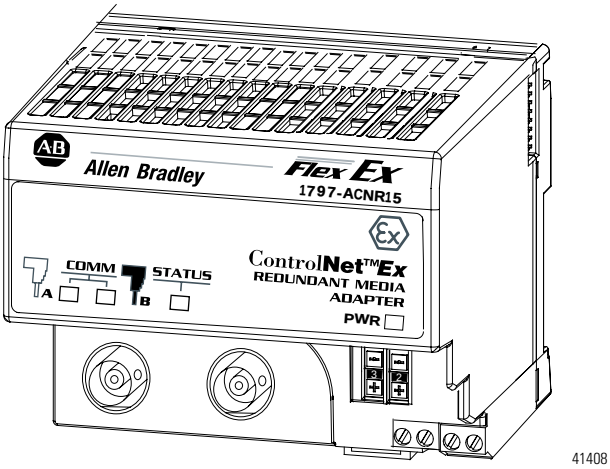

Module Installation

Use the redundant media adapter module to connect FLEX Ex modules to the ControlNet Ex network.

Inputs/Outputs

Do not apply any non-intrinsically safe signals to the adapter.

Intrinsically Safe Specifications

For a full list of specifications, refer to ControlNet Ex Redundant Media Adapter Installation Instructions, publication 1797-5.14.

Operational Temperature	-20 to 70°C (-4 to 158°F)
Agency Certification	Class I Division 1 Groups A-D T4 Class I Zone 1 AEx ib IIC T4
Certificates	FM Certificate Number 3009806 FM

FM Entity Parameters and Requirements

FM I/O Entity Parameters and Requirements

Table 2: Flexbus Entity Values Which are Allowed for the Next FLEX Ex I/O Module

Terminals	V_t (V)	I_t (mA)	Groups	C_a (μF)	L_a (μH)
Male Bus Connector	5.8	400	A-G	3.0	3.0

See the General FM Certification Information chapter on page 38-1.

1797-RPA ControlNet Ex Modular Repeater Adapter and 1797-RPFM Fiber Repeater Module, Medium Distance

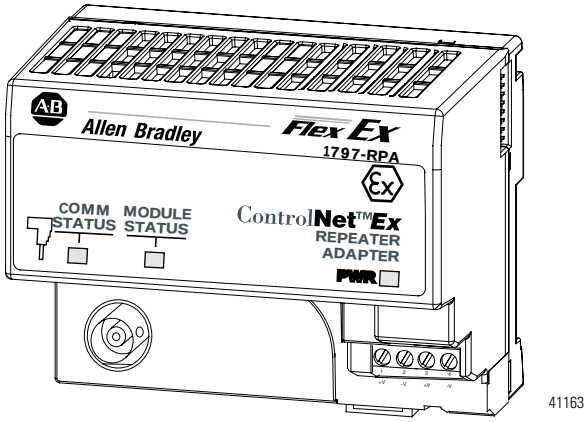

1797-RPA

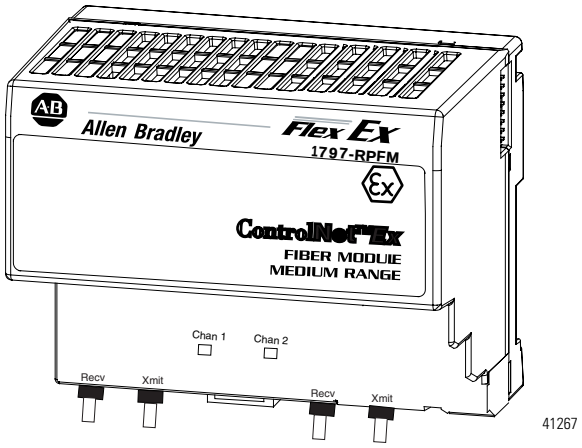

1797-RPFM

Module Installation

A maximum of two 1797-RPFM modules may be used with one 1797-RPA adapter.

Inputs/Outputs

Do not apply any non-intrinsically safe signals to the adapter or repeater module.

Intrinsically Safe Specifications

For a full list of specifications, refer to ControlNet Ex Modular Repeater Adapter and Fiber Repeater Module Installation Instructions, publication 1797-5.15.

Operational Temperature	-20 to 70°C (-4 to 158°F)
Agency Certification	Class I Division 1 Groups A-D T4 Class I Zone 1 AEx ib IIC T4
Certificates	FM Certificate Number 3009806 FM

FM Entity Parameters and Requirements

See the General FM Certification Information chapter on page 38-1.

1797-BIC Bus Isolator Module and 1797-CEC Flexbus Connector

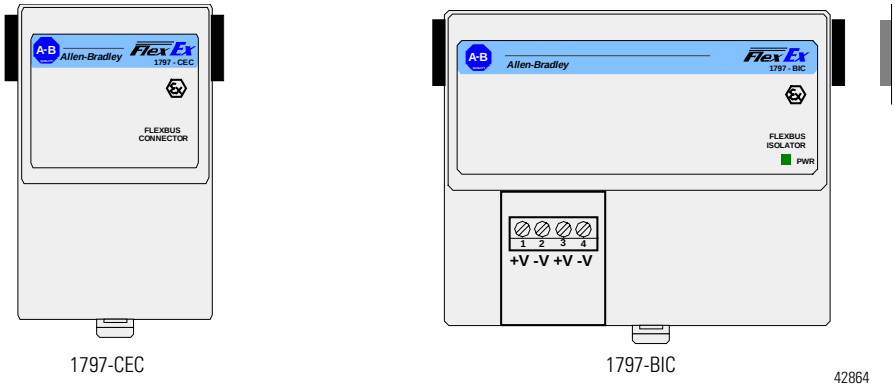

General Installation

The 1797-CEC and -BIC must not be exposed to the environment. These modules have a protection factor of IP20. These modules shall be installed in an enclosure meeting the requirements of ANSI/ISA S82.02.01 or other applicable ordinary location standards.

ATTENTION

The 1797-BIC cannot be used as an associated apparatus after its FLEX Ex backplane connector has been exposed to non-intrinsically safe signals.

Make certain that you only connect the FLEX Ex backplane connector to other intrinsically safe system modules to maintain the integrity of the intrinsically-safe backplane.

ATTENTION

For proper operation, cycle power to the 1797-BIC at the same time power is cycled to the associated adapter.

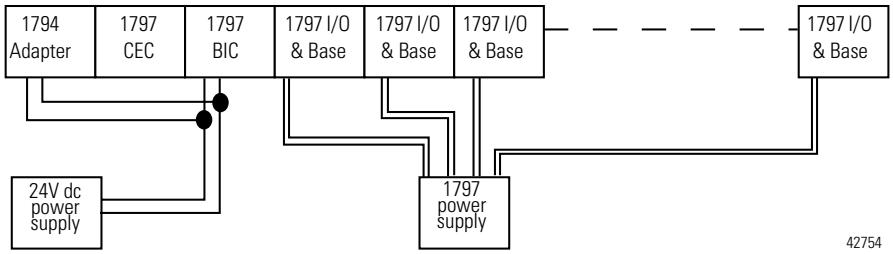

Diagram 1

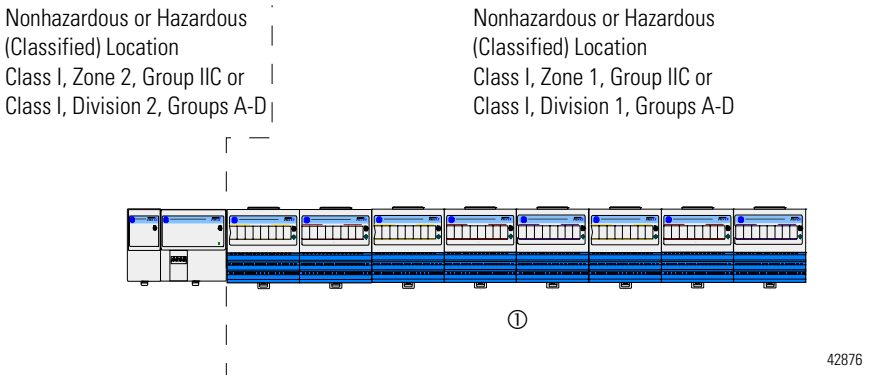

Diagram 2

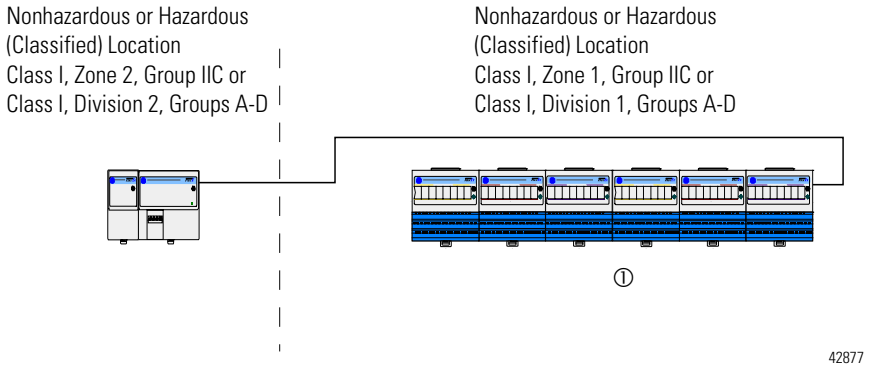

Isolator	Restriction
1797-BIC and -CEC	Maximum of 8 I/O modules①

① I/O module capacitance value is cumulative. Ci (total) = Ci (I/O module 1) + Ci (I/O module 2) + ...Ci (I/O module 8). Ci (total) must be less than 39.67µF. The limitation of eight I/O modules per isolator is a functional limitation. The Ci values referred to here are for the female bus connector of the I/O modules and may be found in the appropriate I/O module block diagram.

Inputs/Outputs

Do not apply any non-intrinsically safe signals to the FLEX Ex backplane connector.

Intrinsically Safe Specifications

For a full list of specifications, refer to FLEX Ex Bus Isolator Installation Instructions, publication 1797-5.13.

1797-BIC Specifications	
Output (Intrinsically Safe) (16 pin male and female flexbus connector)	$V_t \leq$ 5.75V dc $I_t \leq$ 398.25mA $C_a \leq$ 39.67uF $L_a \leq$ 210uH
Operational Temperature	-20 to 70°C (-4 to 158°F)
Agency Certification	Nonincendive, use for Class I, Division 2 Groups A-D or Class I, Zone 2 Group IIC Provides intrinsically safe outputs to Class I, Division 1 Groups A-D or Class I, Zone 1 Group IIC
Certificates	FM Certificate Number 3010810

1797-CEC Specifications	
Operational Temperature	-20 to 70°C (-4 to 158°F)
Agency Certification	Nonincendive, use for Class I, Division 2 Groups A-D or Class I, Zone 2 Group IIC
Certificates	FM Certificate Number 3010810

Notes:

Numerics

1797-ACNR15
inputs 16-1, 35-1, 53-1
installation 16-1, 35-1, 53-1
outputs 16-1, 35-1, 53-1
specifications 16-2, 35-1, 53-1
1797-BCNR 19-1
description 19-1, 37-1
inputs 37-1
outputs 19-1, 37-1
repair 19-2, 37-2
specifications 19-2, 37-2
1797-BIC
inputs 18-2, 55-3
installation 18-1, 55-1
outputs 18-2, 55-3
specifications 18-3, 55-3
1797-CEC
inputs 18-2, 55-3
installation 18-1, 55-1
outputs 18-2, 55-3
specifications 18-3, 55-3
1797-IBN16
entity parameters 5-3, 24-3–24-5, 42-2–42-4
inputs 5-1, 24-1, 42-1
installation 5-1, 24-1
specifications 5-2, 24-2, 42-2
wiring 5-2, 24-1, 42-1
1797-IE8
entity parameters 7-3, 26-3–26-5, 44-2–44-5
inputs 7-1, 26-1, 44-1
installation 7-1, 26-1
specifications 7-2, 26-2
wiring 7-2, 26-1, 44-1
1797-IE8H
entity parameters 8-3, 27-3–27-5, 45-2–45-5
inputs 8-1, 27-1, 45-1
installation 8-1, 27-1
specifications 8-2, 27-2, 45-2
wiring 8-2, 27-1, 45-1
1797-IE8NF
entity parameters 9-3, 28-3–28-5, 46-2–46-5
inputs 9-1, 28-1, 46-1
installation 9-1, 28-1
specifications 9-2, 28-2, 46-2
wiring 9-2, 28-1, 46-1
1797-IJ2
entity parameters 13-3–13-6, 32-2–32-5, 50-2–50-4
inputs 13-1, 32-1, 50-1
installation 13-1, 32-1
specifications 13-2, 32-2, 50-2
wiring 13-2, 32-1, 50-1
1797-IRT8
entity parameters 12-3, 31-3–31-5, 49-2–49-4
inputs 12-1, 31-1, 49-1
installation 12-1, 31-1
specifications 12-2, 31-2, 49-2
wiring 12-2, 31-2, 49-1
1797-OB4D
entity parameters 6-2, 25-2–25-5, 43-2–43-4
installation 6-1, 25-1
outputs 6-1, 25-1, 43-1
specifications 6-2, 25-2, 43-2
wiring 6-1, 25-1
1797-OE8
entity parameters 10-2, 29-2–29-4, 47-2–47-4
installation 10-1, 29-1
outputs 10-1, 29-1, 47-1
specifications 10-1, 29-2, 47-2
wiring 10-1, 29-1, 47-1
1797-OE8H
entity parameters 11-2, 30-2–30-4, 48-2–48-4
installation 11-1, 30-1
outputs 11-1, 30-1, 48-1
specifications 11-1, 30-2, 48-2
wiring 11-1, 30-1, 48-1
1797-PS1E
outputs 14-1
specifications 14-2
wiring 14-2
zone 1 14-1
zone 22 14-1

1797-PS1N
entity parameters 33-2–33-4, 51-2–51-4
outputs 33-1, 51-1
specifications 33-2, 51-2
wiring 33-1, 51-1
zone 1 33-1, 51-1
1797-PS2E2
outputs 15-1
specifications 15-2
wiring 15-2
zone 1 15-1
zone 22 15-1
1797-PS2N2
entity parameters 34-2–34-4, 52-2–52-4
outputs 34-1, 52-1
specifications 34-2, 52-2
wiring 34-1, 52-1
zone 1 34-1, 52-1
1797-RPA 54-1
inputs 17-1, 36-1
installation 17-1, 36-1, 54-1
outputs 17-1, 36-1, 54-1
specifications 17-2, 36-2, 54-2
1797-RPFM
inputs 17-1, 36-1, 54-1
installation 17-1, 36-1, 54-1
outptus 36-1
outputs 17-1, 54-1
specifications 17-2, 36-2, 54-2
1797-TB3
description 22-2, 40-2
inputs 3-2, 22-2, 40-2
installation 3-1, 22-1, 40-1
specifications 3-3, 22-3, 40-3
wiring 3-2, 22-2, 40-2
zone 1 22-1, 40-1
1797-TB3S
description 23-2, 41-2
inputs 4-2, 23-2, 41-2
installation 4-1, 23-1, 41-1
specifications 4-3, 23-3, 41-3
wiring 4-2, 23-2, 41-2
zone 1 23-1, 41-1

C

CE/CENELEC
entity parameters 1-2
installation 1-1
system diagram 2-2–2-4

E

electrostatic charge 1-2, 2-5, 20-2, 21-6, 38-3
entity parameters
1797-IBN16 5-3, 24-3–24-5, 42-2–42-4
1797-IE8 7-3, 26-3–26-5, 44-2–44-5
1797-IE8H 8-3, 27-3–27-5, 45-2–45-5
1797-IE8NF 9-3, 28-3–28-5, 46-2–46-5
1797-IJ2 13-3–13-6, 32-2–32-5, 50-2–50-4
1797-IRT8 12-3, 31-3–31-5, 49-2–49-4
1797-OB4D 6-2, 25-2–25-5, 43-2–43-4
1797-OE8 10-2, 29-2–29-4, 47-2–47-4
1797-OE8H 11-2, 30-2–30-4, 48-2–48-4
1797-PS1N 33-2–33-4, 51-2–51-4
1797-PS2N2 34-2–34-4, 52-2–52-4
CE/CENELEC 1-2
FM 38-3
UL, C-UL 20-2

I

inputs 19-1, 54-1
1797-ACNR15 16-1, 35-1, 53-1
1797-BCNR 19-1, 37-1
1797-BIC 18-2, 55-3
1797-CEC 18-2, 55-3
1797-IBN16 5-1, 24-1, 42-1
1797-IE8 7-1, 26-1, 44-1
1797-IE8H 8-1, 27-1, 45-1
1797-IE8NF 9-1, 28-1, 46-1
1797-IJ2 13-1, 32-1, 50-1
1797-IRT8 12-1, 31-1, 49-1
1797-RPA 17-1, 36-1, 54-1
1797-RPFM 17-1, 36-1, 54-1
1797-TB3 3-2, 22-2, 40-2
1797-TB3S 4-2, 23-2, 41-2

O

outputs
1797-ACNR15 16-1, 35-1, 53-1
1797-BCNR 19-1, 37-1
1797-BIC 18-2, 55-3
1797-CEC 18-2, 55-3
1797-OB4D 6-1, 25-1, 43-1
1797-OE8 10-1, 29-1, 47-1
1797-OE8H 11-1, 30-1, 48-1
1797-PS1E 14-1
1797-PS1N 33-1, 51-1
1797-PS2E2 15-1
1797-PS2N2 34-1, 52-1
1797-RPA 17-1, 36-1, 54-1
1797-RPFM 17-1, 36-1, 54-1

R

repair 1-3, 2-5, 20-2, 21-6, 38-3
1797-BCNR 19-2, 37-2

S

specifications
1797-ACNR15 16-2, 35-1, 53-1
1797-BCNR 19-2, 37-2
1797-BIC 18-3, 55-3
1797-CEC 18-3
1797-IBN16 5-2, 24-2, 42-2
1797-IE8 7-2, 26-2, 44-2
1797-IE8H 8-2, 27-2, 45-2
1797-IE8NF 9-2, 28-2, 46-2
1797-IJ2 13-2, 32-2, 50-2
1797-IRT8 12-2, 31-2, 49-2
1797-OB4D 6-2, 25-2, 43-2
1797-OE8 10-1, 29-2, 47-2
1797-OE8H 11-1, 30-2, 48-2
1797-PS1E 14-2
1797-PS1N 33-2, 51-2
1797-PS2E2 15-2
1797-PS2N2 34-2, 52-2
1797-RPA 17-2, 36-2, 54-2
1797-RPFM 17-2, 36-2, 54-2
1797-TB3 3-3, 22-3, 40-3
1797-TB3S 4-3, 23-3, 41-3
general 2-6

U

UL, C-UL
entity parameters 20-2
installation 20-1

W

wiring
- 1797-IBN16 5-2, 24-1, 42-1
- 1797-IE8 7-2, 26-1, 44-1
- 1797-IE8H 8-2, 27-1, 45-1
- 1797-IE8NF 9-2, 28-1, 46-1
- 1797-IJ2 13-2, 32-1, 50-1
- 1797-IRT8 12-2, 31-2, 49-1
- 1797-OB4D 6-1, 25-1
- 1797-OB4D
- 1797-OE8 10-1, 29-1, 47-1
- 1797-OE8H 11-1, 30-1, 48-1
- 1797-PS1E 14-2
- 1797-PS1N 33-1, 51-1
- 1797-PS2E2 15-2
- 1797-PS2N2 34-1, 52-1
- 1797-TB3 3-2, 22-2, 40-2
- 1797-TB3S 4-2, 23-2, 41-2

Z

zone 1 1-2, 2-5, 20-2, 21-5, 38-2
- 1797-PS1E 14-1
- 1797-PS1N 33-1, 51-1
- 1797-PS2E2 15-1
- 1797-PS2N2 34-1, 52-1
- 1797-TB3 22-1, 40-1
- 1797-TB3S 23-1, 41-1

zone 22 1-2, 2-5
- 1797-PS1E 14-1
- 1797-PS2E2 15-1

Notes:

www.rockwellautomation.com

Power, Control and Information Solutions Headquarters

Americas: Rockwell Automation, 1201 South Second Street, Milwaukee, WI 53204-2496 USA, Tel: (1) 414.382.2000, Fax: (1) 414.382.4444
Europe/Middle East/Africa: Rockwell Automation, Vorstlaan/Boulevard du Souverain 36, 1170 Brussels, Belgium, Tel: (32) 2 663 0600, Fax: (32) 2 663 0640
Asia Pacific: Rockwell Automation, Level 14, Core F, Cyberport 3, 100 Cyberport Road, Hong Kong, Tel: (852) 2887 4788, Fax: (852) 2508 1846

Publication 1797-6.5.6 - June 2005
Supersedes Publication 1797-6.5.6 - April 2004

Copyright © 2005 Rockwell Automation, Inc. All rights reserved. Printed in the U.S.A.