Installation Instructions

POINT I/O PROFIBUS Adapter

(Cat. No. 1734-APB)

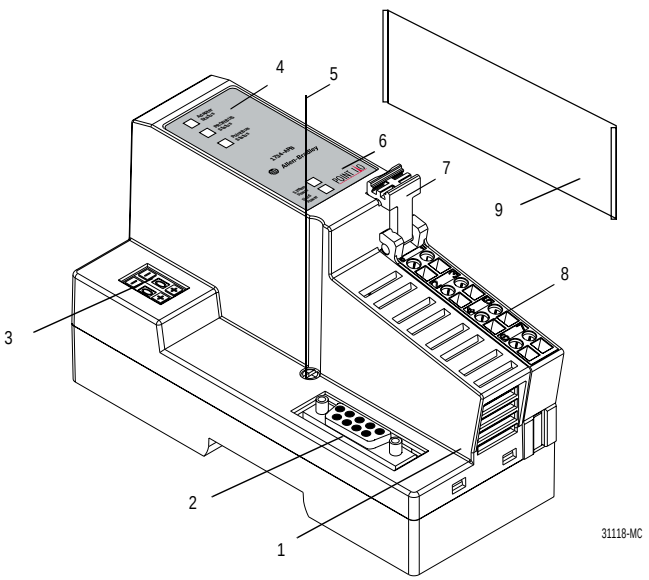

	Description		Description
1	1734-APB PROFIBUS Adapter Module	6	System Power and Field Power Indicators
2	PROFIBUS Connector	7	RTB Removal Handle
3	Node Address Thumbwheel	8	Removable Terminal Block (RTB)
4	Status Indicators - Adapter, PROFIBUS and PointBus	9	Safety End Cap
5	DIN Rail Locking Screw (orange)		

IMPORTANT You must use Series B or later 1734 POINT I/O modules with this adapter.

POINT I/O is a trademark of Rockwell Automation
PROFIBUS is a trademark of PROFIBUS Trade Org.

Publication 1734-IN014C-EN-P - March 2002

Important User Information

Because of the variety of uses for the products described in this publication, those responsible for the application and use of these products must satisfy themselves that all necessary steps have been taken to assure that each application and use meets all performance and safety requirements, including any applicable laws, regulations, codes and standards. In no event will Allen-Bradley be responsible or liable for indirect or consequential damage resulting from the use or application of these products.

Any illustrations, charts, sample programs, and layout examples shown in this publication are intended solely for purposes of example. Since there are many variables and requirements associated with any particular installation, Allen-Bradley does not assume responsibility or liability (to include intellectual property liability) for actual use based upon the examples shown in this publication.

Allen-Bradley publication SGI-1.1, *Safety Guidelines for the Application, Installation and Maintenance of Solid-State Control* (available from your local Allen-Bradley office), describes some important differences between solid-state equipment and electromechanical devices that should be taken into consideration when applying products such as those described in this publication.

Reproduction of the contents of this copyrighted publication, in whole or part, without written permission of Rockwell Automation, is prohibited.

Throughout this publication, notes may be used to make you aware of safety considerations. The following annotations and their accompanying statements help you to identify a potential hazard, avoid a potential hazard, and recognize the consequences of a potential hazard:

WARNING

Identifies information about practices or circumstances that can cause an explosion in a hazardous environment, which may lead to personal injury or death, property damage, or economic loss.

ATTENTION

Identifies information about practices or circumstances that can lead to personal injury or death, property damage, or economic loss.

IMPORTANT Identifies information that is critical for successful application and understanding of the product.

ATTENTION

Environment and Enclosure

This equipment is intended for use in a Pollution Degree 2 industrial environment, in overvoltage Category II applications (as defined in IEC publication 60664-1), at altitudes up to 2000 meters without derating.

This equipment is considered Group 1, Class A industrial equipment according to IEC/CISPR Publication 11. Without appropriate precautions, there may be potential difficulties ensuring electromagnetic compatibility in other environments due to conducted as well as radiated disturbance.

This equipment is supplied as "open type" equipment. It must be mounted within an enclosure that is suitably designed for those specific environmental conditions that will be present and appropriately designed to prevent personal injury resulting from accessibility to live parts. The interior of the enclosure must be accessible only by the use of a tool. Subsequent sections of this publication may contain additional information regarding specific enclosure type ratings that are required to comply with certain product safety certifications.

See NEMA Standards publication 250 and IEC publication 60529, as applicable, for explanations of the degrees of protection provided by different types of enclosure. Also, see the appropriate sections in this publication, as well as the Allen-Bradley publication 1770-4.1 ("Industrial Automation Wiring and Grounding Guidelines"), for additional installation requirements pertaining to this equipment.

ATTENTION

Preventing Electrostatic Discharge

This equipment is sensitive to electrostatic discharge, which can cause internal damage and affect normal operation. Follow these guidelines when you handle this equipment:

- Touch a grounded object to discharge potential static.
- Wear an approved grounding wriststrap.
- Do not touch connectors or pins on component boards.
- Do not touch circuit components inside the equipment.
- If available, use a static-safe workstation.
- When not in use, store the equipment in appropriate static-safe packaging.

ATTENTION

POINT I/O is grounded through the DIN rail to chassis ground. Use zinc plated, yellow chromated steel DIN rail to assure proper grounding. Using other DIN rail materials (e.g. aluminum, plastic, etc.) which can corrode, oxidize or are poor conductors can result in improper or intermittent platform grounding.

Installing the PROFIBUS Adapter

To install the adapter on the DIN rail prior to installing other base units, proceed as follows.

1. Position the adapter vertically above the DIN rail.
2. Press down firmly to install the adapter on the DIN rail.
3. The locking mechanism will lock the adapter to the DIN rail.
4. Insert the PROFIBUS network plug and tighten the holding screws.

5. Set the node address on the node address thumbwheel.
6. Slide the safety end cap (9) up to remove. This exposes the backplane and power interconnections.

ATTENTION

Do not discard the end cap. Use this end cap to cover the exposed interconnections on the last mounting base on the DIN rail. Failure to do so could result in equipment damage or injury from electric shock.

Setting the Node Address

Set the node address using the 2-position thumbwheel switch. Valid settings range from 01 to 99. Press either the + or - buttons to change the number.

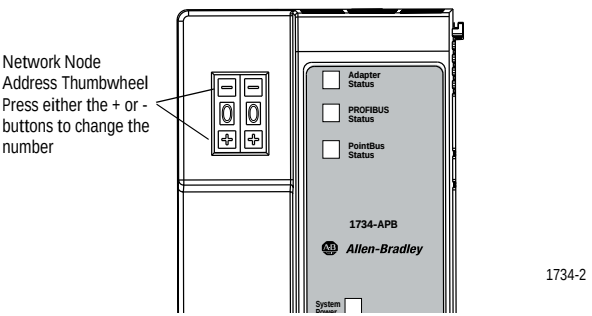

GSD File Requirements

Current functionality of PROFIBUS adapters requires GSD files. These files are easy to install and are available online at:

`www.ab.com/networks/gsd/`.

Installing a Replacement PROFIBUS Adapter to an Existing System

1. Remove the existing adapter from the DIN rail as follows:

   A. Pull up on the RTB removal handle (7) to remove the terminal block.

   B. Loosen the screws holding the PROFIBUS network plug and pull up to remove.

   C. Remove the adjacent module from its base.

   D. Use a small bladed screwdriver to rotate the DIN rail locking screw (5) to a vertical position. This releases the locking mechanism.

   E. Lift straight up to remove.

2. Slide the safety end cap up to remove. This exposes the backplane and power connections.
3. Position the replacement adapter (1) vertically above the DIN rail. (Make certain the DIN rail lock is in the horizontal position.) Slide the adapter down, allowing the interlocking side pieces to engage the adjacent module.
4. Press firmly to seat the adapter (1) on the DIN rail. The adapter locking mechanism will snap into place.
5. Set the node address on the node address thumbwheel.
6. Insert the PROFIBUS network plug and tighten the holding screws.
7. Insert the end opposite the handle into the base unit. This end has a curved section that engages with the wiring base.
8. Rotate the terminal block into the wiring base until it locks itself in place.
9. Replace the adjacent module in its base.

Wiring the PROFIBUS Adapter

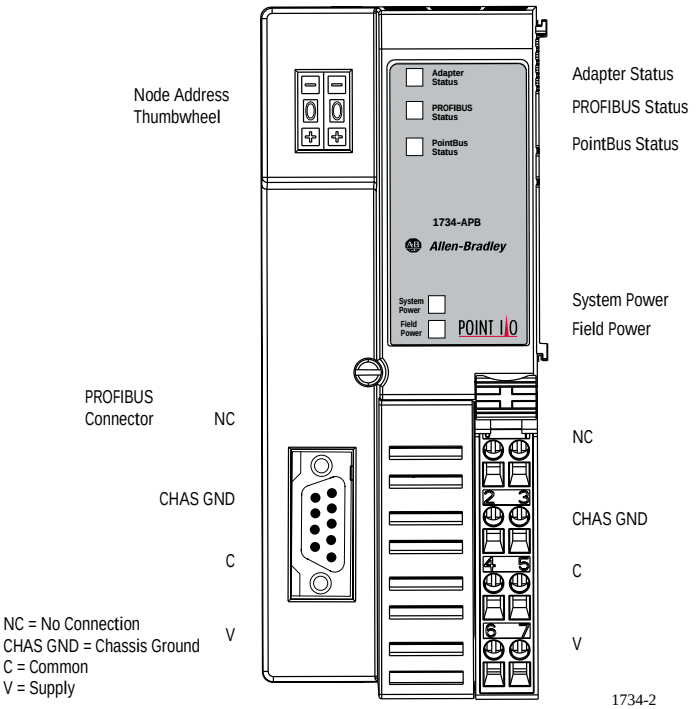

12/24V dc

Do not connect 120/240V ac power to this supply.

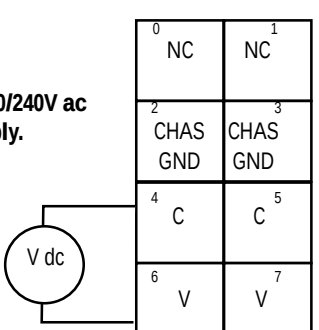

This dc supply will be connected to the internal power bus.

NC = No Connection
C = Common

CHAS GND = Chassis Ground
V = Supply

1734-3

Terminal		Notes
0	No connection	Reserved
1	No connection	
2	Chassis Ground	
3	Chassis Ground	
4	Common	
5	Common	
6	Voltage Input	Apply 12/24V dc. Connects to the internal power bus.
7	Voltage Input	

PROFIBUS Connection Plug Wiring

PROFIBUS connection

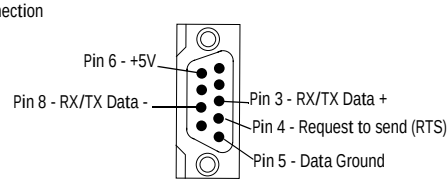

Pin Number	Name	Description
Housing	Shield	Connected to Chassis Ground
1	Not connected	
2	Not connected	
3	RX/TX Data +	Positive RX/TX data line
4	RTS	Request to send
5	Data Ground	Isolated ground
6	+5V BUS	Isolated +5V from RS485 side
7	Not connected	
8	RX/TX Data -	Negative RX/TX data line
9	Not connected	

Troubleshooting with the Indicators

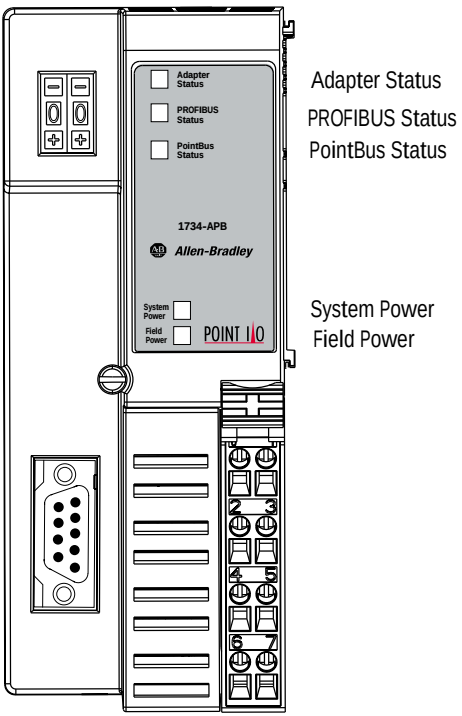

Indicator	Indication	Probable Cause
System Power	Off	System power not applied.
	Green	System power (5V) present
Field Power	Off	Field power not applied.
	Green	Field power (24V) applied.

Indication	Probable Cause
Adapter Status	
Off	No power supplied. Hardware check in progress. Initialization in progress.
Green	Operating normally
Red	Hardware check fault.
PROFIBUS Status	
Off	No power supplied. Bus is off-line.
Green	Bus is online (data exchange).
Flashing Green	Adapter has received a CLEAR command from the master.
Red	Error in PROFIBUS initialization. No modules installed in the backplane.
Flashing Red	1Hz - Check_Configuration telegram rejected. - Maximum number of POINT I/O modules in master configuration overridden. 2Hz - SetPrm telegram rejected. - The first byte in user parameter data does not equal zero. - Maximum number of user parameter bytes overridden.
PointBus Status	
Off	No power supplied. Hardware check in progress. Initialization in progress.
Green	Normal operation.
Flashing Red	1Hz - Incorrect POINT I/O module installed. POINT I/O module removed from backplane.
Red	Critical link failure (BUS_OFF).

Specifications

Specifications - 1734-APB PROFIBUS Adapter Module	
Communication Interface Specifications	
Expansion I/O Capacity	Up to 14 modules, depending on current draw. Add up the current requirements of the modules you want to use, and determine that they do not exceed the amperage limit of the 1734-APB. (Note: Total expansion up to 63 modules - 14 modules (with 75mA current draw) maximum with 1734-APB - add 1734-EP24DC modules for additional 14 modules (or less based on current requirements), up to 63 module maximum) **Cat. No. — PointBus Current Requirements** 1734-IB2 — 75mA 1734-IB4 — 75mA 1734-IV2 — 75mA 1734-IV4 — 75mA 1734-OB2E — 75mA 1734-OB4E — 75mA 1734-OW2 — 80mA 1734-IE2C — 75mA 1734-OE2C — 75mA 1734-IE2V — 75mA 1734-OE2V — 75mA 1734-IA2 — 75mA 1734-IM2 — 75mA 1734-OA2 — 75mA 1734-IJ2 — 160mA 1734-IK2 — 160mA 1734-IR2 — 220mA 1734-IT2 — 175mA 1734-VHSC5 — 180mA 1734-VHSC24 — 180mA
Module Location	Starter module - left side of 1734 system
Power Supply Specifications	
Input Voltage Rating	24V dc nominal 10-28.8V dc range
Field Side Power Requirements	24V dc (+20% = 28.8V dc maximum) @ 400mA maximum
Inrush Current	6A maximum for 10ms
PointBus Output Current	1A maximum @ 5V dc ±5% (4.75 - 5.25)
Input Overvoltage Protection	Reverse polarity protected

Interruption	Output voltage will stay within specifications when input drops out for 10ms at 10V with maximum load.
General Specifications	
Indicators	3 red/green status indicators Adapter status PROFIBUS status PointBus status 2 green power supply status indicators: System Power (PointBus 5V power) Field Power (24V from field supply)
Power Consumption	8.1W maximum @ 28.8V dc
Power Dissipation	2.8W maximum @ 28.8V
Thermal Dissipation	9.5 BTU/hr maximum @ 28.8V dc
Isolation Voltage	1250V rms/V ac
Field Power Bus Nominal Voltage Supply Voltage Range Supply Current	 24V dc 10-28.8V dc range, 10A maximum
Dimensions Inches (Millimeters)	3.0H x 2.16W x 5.25L (76.2H x 54.9W x 133.4L)
Environmental Conditions Operational Temperature	 IEC 60068-2-1 (Test Ad, Operating Cold), IEC 60068-2-2 (Test Bd, Operating Dry Heat), IEC 60068-2-14 (Test Nb, Operating Thermal Shock): -20 to 55°C (-4 to 131°F)
Storage Temperature	IEC 60068-2-1 (Test Ab, Unpackaged Nonoperating Cold), IEC 60068-2-2 (Test Bb, Unpackaged Nonoperating Dry Heat), IEC 60068-2-14 (Test Na, Unpackaged Nonoperating Thermal Shock): -40 to 85°C (-40 to 185°F)
Relative Humidity	IEC 60068-2-30 (Test Db, Unpackaged Nonoperating Damp Heat): 5 to 95% noncondensing
Shock Operating Non-operating	IEC 60068-2-27 (Test Ea, Unpackaged Shock) 30g peak acceleration 50g peak acceleration
Vibration	IEC 60068-2-6, (Test Fc, Operating) Tested 5g @ 10-500Hz

ESD Immunity	IEC 61000-4-2: 6kV contact discharges 8kV air discharges
Radiated RF Immunity	IEC 61000-4-3: 10V/m with 1kHz sine-wave 80%AM from 30MHz to 1000MHz 10V/m with 200Hz 50% pulse 100%AM at 900MHz
EFT/B Immunity	IEC61000-4-4 ±4kV at 2.5kHz on power ports ±4kV at 2.5kHz on communications ports
Surge Transient Immunity	IEC 61000-4-5: ±500V line-line(DM) and ±500V line-earth(CM) on dc power ports ±4kV line-earth(CM) on shielded ports
Conducted RF Immunity	IEC 61000-4-6: 10Vrms with 1kHz sine-wave 80%AM from 150kHz to 80MHz
Emissions	CISPR 11 Group 1, Class A
Enclosure Type Rating	None (open-style)
Field Wiring Terminations PROFIBUS	1 - Not connected 2 - Not connected 3 - +RTX/TX data line 4 - Request to send 5 - Ground Bus 6 - +5V Bus 7 - Not connected 8 - Negative RTX/TX 9 - Not connected Housing - Earth ground
Power Supply	0 - No Connection 2 - Chassis Ground 4 - Common 6 - Supply 1 - No Connection 3 - Chassis Ground 5 - Common 7 - Supply
Conductors Wire Size	14 AWG (2.5mm^2) - 22 AWG (0.25mm^2) solid or stranded copper wire rated at 75°C or higher 3/64 inch (1.2mm) insulation maximum
Conductors Category	2[1]
Terminal Base Screw Torque	7 pound-inches (0.6Nm)
Mass	9.0 oz/255 grams

Agency Certification (when product is marked)	**CE**[2] - European Union 89/336/EEC EMC Directive Directive, compliant with: EN 50081-2; Industrial Emissions EN 50082-2; Industrial Immunity EN 61326; Meas./Control/Lab., Industrial Requirements EN 61000-6-2; Industrial Immunity **C-Tick**[2] **-** Australian Radiocommunications Act compliant with AS/NZS 2064, Industrial Emissions
GSD File	Download your GSD file from `www.ab.com/networks/gsd/.`
User Manual	Publication 1734-UM005❒-EN-P

1 Use this conductor category information for planning conductor routing as described in publication 1770-4.1, "Industrial Automation Wiring and Grounding Guidelines."

2 See the Product Certification link at `www.ab.com` for Declaration of Conformity, Certificates, and other certification details.

www.rockwellautomation.com

Power, Control and Information Solutions Headquarters

Americas: Rockwell Automation, 1201 South Second Street, Milwaukee, WI 53204-2496 USA, Tel: (1) 414.382.2000, Fax: (1) 414.382.4444
Europe/Middle East/Africa: Rockwell Automation, Vorstlaan/Boulevard du Souverain 36, 1170 Brussels, Belgium, Tel: (32) 2 663 0600, Fax: (32) 2 663 0640
Asia Pacific: Rockwell Automation, Level 14, Core F, Cyberport 3, 100 Cyberport Road, Hong Kong, Tel: (852) 2887 4788, Fax: (852) 2508 1846

Publication 1734-IN014C-EN-P - March 2002 PN 957678-43

Supersedes publication 1734-IN014B-EN-P - June 2001

© 2002 Rockwell International Corporation. Printed in USA