User Manual

Original Instructions

Allen-Bradley

GuardShield Safe 4 and Safe 4 PAC Safety Light Curtains

Catalog Numbers 445L-P4S*x*YD, 445L-P4L*x*YD, 445L-P4X*x*YD

Allen-Bradley • Rockwell Software

Rockwell Automation

Important User Information

Read this document and the documents listed in the additional resources section about installation, configuration, and operation of this equipment before you install, configure, operate, or maintain this product. Users are required to familiarize themselves with installation and wiring instructions in addition to requirements of all applicable codes, laws, and standards.

Activities including installation, adjustments, putting into service, use, assembly, disassembly, and maintenance are required to be carried out by suitably trained personnel in accordance with applicable code of practice.

If this equipment is used in a manner not specified by the manufacturer, the protection provided by the equipment may be impaired.

In no event will Rockwell Automation, Inc. be responsible or liable for indirect or consequential damages resulting from the use or application of this equipment.

The examples and diagrams in this manual are included solely for illustrative purposes. Because of the many variables and requirements associated with any particular installation, Rockwell Automation, Inc. cannot assume responsibility or liability for actual use based on the examples and diagrams.

No patent liability is assumed by Rockwell Automation, Inc. with respect to use of information, circuits, equipment, or software described in this manual.

Reproduction of the contents of this manual, in whole or in part, without written permission of Rockwell Automation, Inc., is prohibited

Throughout this manual, when necessary, we use notes to make you aware of safety considerations.

	WARNING: Identifies information about practices or circumstances that can cause an explosion in a hazardous environment, which may lead to personal injury or death, property damage, or economic loss.
	ATTENTION: Identifies information about practices or circumstances that can lead to personal injury or death, property damage, or economic loss. Attentions help you identify a hazard, avoid a hazard, and recognize the consequence.
IMPORTANT	Identifies information that is critical for successful application and understanding of the product.

Labels may also be on or inside the equipment to provide specific precautions.

	SHOCK HAZARD: Labels may be on or inside the equipment, for example, a drive or motor, to alert people that dangerous voltage may be present.
	BURN HAZARD: Labels may be on or inside the equipment, for example, a drive or motor, to alert people that surfaces may reach dangerous temperatures.
	ARC FLASH HAZARD: Labels may be on or inside the equipment, for example, a motor control center, to alert people to potential Arc Flash. Arc Flash will cause severe injury or death. Wear proper Personal Protective Equipment (PPE). Follow ALL Regulatory requirements for safe work practices and for Personal Protective Equipment (PPE).

Preface

Summary of Changes 7
Additional Resources 7

Introduction

Chapter 1

Safety Precautions 9
Principles for Safe Use and Symbols Used 9
Specialist Personnel 11
Range of Uses of the Device 11
Proper Use 12
General Protective Notes and Protective Measures 12
Product Description 12
Special Features 13
Principles of Operation 13
Perimeter Systems (PAC) 14
Examples of Range of Use 16
GuardShield Safe 4 Laser Alignment 16
Safety Functions 17

Determine the Safety Distance

Chapter 2

US Safety Distance Formula 19
OSHA Safety Distance Calculation Formula 20
The ANSI Safety Distance Formula 20
European Safety Distance Formula 21
How to Calculate the Safety Distance S for GuardShield Safe 4 Systems (Resolution ≤40 mm) 22
How to Calculate the Safety Distance S for GuardShield Safe 4 PAC Systems 22
Minimum Distance from Reflecting Surfaces 23
How to Determine the Minimum Distance from the Reflecting Surfaces: 23

Installation and Mounting

Chapter 3

Alignment Procedure 25
Standard GuardShield Safe 4 Safety Light Curtain 25
GuardShield Safe 4 Safety Light Curtain with Integrated Laser Alignment 26
Remarks to ILAS 27
Correct Installation 27
Incorrect Installation 28
Multiple GuardShield Safe 4 Safety Light Curtains 29
Mounting Brackets 30
Safe 4 Shock Mounting Kit 31

Electrical Installation

Chapter 4

Connections 33
Power Supply 33

Cables/Connectors 34
M12 Connector Dimensions 34
Test Input to Transmitter 35
Bringing Into Operation 36
Outputs 36
Typical Wiring Diagram to MSR127 Safety Relay Module 36
Typical Wiring Diagrams—Safe 4 or Safe 4 PAC 37
Connection with Guardmaster SI Safety Relay 37

Chapter 5

Troubleshooting

System Status Indicators 39
Checklist 41

Chapter 6

Safety Instructions

Maintenance 43
Daily Inspection 43
Six-month Inspection 44
Cleaning 44
Date Code and Label 44
Technical Specifications 46
Catalog Number Explanation 48
Dimensional Drawings [mm (in.)] 49
System with Integrated Controller 49
Required Logic Interfaces 52
Optional Accessories 53
Mirror 440L-AM075 [mm (in.)] 54
Mirror 440L-AM125 [mm (in.)] 55
Corner Mirror for Multi-sided Guarding 56
Mounting Stand 57

Appendix A

GuardShield Safe 4 Specials

Safety Light Curtain Systems 59
Introduction 59
Systems without an Integrated Laser Alignment System (ILAS) 60
Systems with Connector Cap for Hard-wired Connection 61
Cascaded Systems 61
Cascading 61
Two Segment Cascading GuardShield Safe 4 Systems 62
Typical Configuration of a Cascaded GuardShield Safe 4 62
Three Segment GuardShield Safe 4 Cascading Systems 62
Systems with Separated Controller 63
Cascaded Systems 64
Special Systems 65
Safe 4 Specials Catalog Numbers 66

Appendix B

Certification and Compliance

Certification 69
Compliance to European Union Directives 69

Conditions Required for Proper Use of the GuardShield Safe 4 POC and PAC Safety Light Curtain

Please make sure you read and understand these requirements before you select and install the GuardShield™ Type 4 safety light curtain. GuardShield Type 4 POC safety light curtains are point of operation control (POC) safeguarding devices. These safety light curtains are intended to be used to provide POC safeguarding of personnel on a variety of machinery. GuardShield PAC safety light curtains are perimeter access control (PAC) safeguarding devices. These safety light curtains are intended to be used to provide PAC safeguarding of personnel around a variety of machinery.

The GuardShield Type 4 family of safety light curtains are general purpose presence sensing devices which are designed to protect personnel working on or near machinery.

The installation of GuardShield Type 4 safety light curtains must comply with all applicable federal, state, and local rules, regulations, and codes.

It is the responsibility of the employer to properly install, operate, and maintain the product as well as the machinery on which the GuardShield Type 4 presence sensing device is installed.

GuardShield Type 4 safety light curtains must be properly installed by qualified personnel.

GuardShield Type 4 safety light curtains are presence sensing devices and will not protect personnel from heat, chemicals, or flying parts. They are intended to signal a stop of hazardous machine motion when the sensing field is broken.

GuardShield Type 4 safety light curtains can only be used on machinery which can be stopped anywhere in its stroke or cycle.

GuardShield Type 4 safety light curtains should never be used on full revolution clutched machinery.

The effectiveness of the GuardShield Type 4 safety light curtains depends upon the integrity of the machine control circuit. The machinery on which the GuardShield Type 4 presence sensing device is installed should have control circuitry that is fail safe in design.

All stopping mechanisms for the machinery should be inspected regularly to ensure proper operation. The protected machinery must have a consistent reliable and repeatable stopping time.

Failure to read and follow these instructions can lead to misapplication or misuse of the GuardShield Type 4 safety light curtains, resulting in personal injury and damage to equipment.

Notes:

This manual covers the operation and installation of the:

- GuardShield™ Safe 4 POC and PAC safety light curtains
- GuardShield Safe 4 special configurations in the appendix

IMPORTANT Save these instructions for future use.

Recognized technical regulations and quality assurance system ISO 9000 are carefully applied during the development and production of Allen-Bradley® Guardmaster® products.

This technical description must be followed when installing and commissioning the GuardShield Safe 4 safety light curtain. A qualified person must perform inspection and commissioning.

Rockwell Automation reserves the right to make changes or revisions to the material contained in this publication and cannot be held liable for incidental or consequential damages that result from the furnishing, performance, or use of this material.

Summary of Changes

Topic	Page
Updated Conditions Required	5

Additional Resources

These documents contain additional information concerning related products from Rockwell Automation.

Resource	Description
Industrial Automation Wiring and Grounding Guidelines, publication 1770-4.1	Provides general guidelines for installing a Rockwell Automation industrial system.
Product Certifications website, rok.auto/certifications	Provides declarations of conformity, certificates, and other certification details.

You can view or download publications at rok.auto/literature.

Notes:

Introduction

The GuardShield™ Safe 4 safety light curtains family are general-purpose presence sensing devices. These light curtains are designed for use on hazardous machinery providing point of operation (POC), and perimeter access (PAC) detection.

It is a self-contained, two box, Type 4 ESPE (Electrosensitive Protective Equipment).

The GuardShield Safe 4 is offered in a number of configurations, which are based on a standard Type 4 safety light curtain platform. And the standard GuardShield Safe 4 POC and Safe 4 PAC, the GuardShield Safe 4 are offered in special configurations that are described in the Appendix A.

IMPORTANT These installation instructions address the technical personnel of the machine manufacturer and or the installer of the safety system regarding the proper mounting, configuration, electrical installation, commissioning, operation, and maintenance of the GuardShield Safe 4 safety light curtain. These installation instructions do not provide instruction for the operation of machinery to which the GuardShield Safe 4 safety light curtain is integrated. Only qualified personnel can install this equipment.

Safety Precautions

Principles for Safe Use and Symbols Used

The following instructions are preventive warnings to confirm the safe and proper operation of the GuardShield Safe 4 light curtains. These instructions are an essential part of the safety precautions and therefore have to be observed at any time.

Throughout this manual, we use the labels ATTENTION and IMPORTANT to alert you to the following:

ATTENTION: Failure to observe can result in dangerous operation.

ATTENTION: Identifies information about practices of circumstances that can lead to personal injury or death, property damage, or economic loss.

ATTENTION helps you

- Identify a hazard
- Avoid a hazard
- Recognize the consequences

IMPORTANT: Identifies information that is especially important for successful application and knowledge of the product.

ATTENTION: Potentially hazardous situation, which, if not prohibited, can lead to serious or deadly injury.

Failure to observe can result in dangerous operation.

The GuardShield Safe 4 safety light curtain cannot be used with machines that cannot be stopped electrically in an emergency.

The safety distance between the GuardShield Safe 4 safety light curtain and a dangerous machine movement has to be maintained always.

Additional mechanical protective devices have to be installed in a way that hazardous machine elements cannot be reached without passing through the protective field.

The GuardShield Safe 4 safety light curtain has to be installed in a way that you can only operate within the sensing area.

Improper installation can result in serious injury.

Never connect the outputs to +24V DC. If the outputs are connected to +24V DC, they are in ON-state and cannot stop hazardous spots at the machine/application.

Never expose the GuardShield Safe 4 safety light curtain to flammable or explosive gases.

Regular safety inspections are imperative (see maintenance).

Do not repair or modify the GuardShield Safe 4 safety light curtain. The GuardShield Safe 4 safety light curtain is not field repairable and can only be repaired at the factory. Removal of either of the GuardShield Safe 4 endcaps voids the warranty terms of this product.

Specialist Personnel

Only a qualified person can install, commission, and service the GuardShield Safe 4 safety light curtain. A qualified person is defined as a person who:

- Has undergone the appropriate technical training

and

- The responsible machine operator has instructed them in the operation of the machine and the currently valid safety guidelines

and

- Who has read and has ongoing access to these installation instructions

Range of Uses of the Device

The GuardShield Safe 4 safety light curtain is classified as electro-sensitive protective equipment (ESPE). The physical resolution of the POC is 14 mm (0.55 in.) or 30 mm (1.18 in.). The maximum protective field width of GuardShield Safe 4 POC is:

- 0...9 m (29.5 ft) for the 14 mm (0.55 in.) resolution,
- 0...18 m (59.1 ft) for the 30 mm (1.18 in.) resolution
- 5...30 m (16.4...98.4 ft) for the 30 mm (1.18 in.) resolution

The protective field height is between 120 mm (4.7 in.) and 1920 mm (75.6 in.).

The maximum protective field width of GuardShield Safe 4 PAC (2-, 3-, and 4-beam) is 5...30 m (16.4...98.4 ft).

All standard GuardShield Safe 4 POC and PAC light curtains have Integrated Laser Alignment.

The device is a Type 4 ESPE as defined by IEC 61496-1 and CLC/TS 61496-2. Therefore, it is allowed for use with controls in safety category Type 4 in compliance with EN ISO 13849, SIL CL3 in accordance with EN 62061 or up to PLe in accordance with EN ISO 13849. The device is suitable for:

- Point of operation protection (finger and hand protection)
- Hazardous area protection
- Access protection

Access to the hazardous point must be allowed only through the protective field. The machine/system is not allowed to start as long as personnel are within the hazardous area. See the Examples of Range of Use on page 16 for an illustration of the protective modes.

Depending on the application, mechanical protection devices can be required and the safety light curtain.

Proper Use

The GuardShield Safe 4 safety light curtain must be used only as defined in the Examples of Range of Use on page 16. It can only be used if qualified personnel have installed and initialized it.

If the device is used for any other purpose or modified in any way, all applicable product warranties will be null and void.

General Protective Notes and Protective Measures

IMPORTANT Observe the following items to confirm the proper and safe use of the GuardShield Safe 4 safety light curtain.

The national/international rules and regulations apply to the installation, use, and periodic technical inspections of the safety light curtain, in particular:

- Machine Directive 2006/42/EC
- Low Voltage Directive 2006/95/EC
- Use of Work Directive (2009/104/EC)
- The work safety regulations/safety rules
- Other relevant health and safety regulations

Manufacturers and users of the machine with which the safety light curtain is used are responsible for obtaining and observing all applicable safety regulations and rules.

The notices, in particular the test regulations of these installation instructions (for example, on use, mounting, installation, or integration into the existing machine controller) must be observed.

Specialist personnel or specially qualified and authorized personnel have to implement the tests. It is also recorded and documented to confirm that the tests can be reconstructed and retraced at any time.

The installation instructions must be made available to the user of the machine where the GuardShield Safe 4 safety light curtain is installed. The machine operator is to be instructed in the use of the device by specialist personnel and must be instructed to read the installation instructions.

Product Description

This section provides information on the special features and properties of the safety light curtain. It describes the structure and functions of the unit.

Read this section before you mount, install, and commission the unit.

Special Features

- Integrated laser alignment
- Large range with a compact profile
  14 mm (0.55 in.) resolution: 0...9 m (0...29.53 ft)
  30 mm (1.18 in.) resolution: 0...18 m or 5...30 m (0...60.05 ft or 16.4...98.4 ft)
- Tolerant to dust and pollution
- Short circuit protected semiconductor outputs
- Built-in-diagnostic status indicators
- Optical synchronization, no electrical cable needed between transmitter and receiver
- Maintenance-free and cost-effective

Principles of Operation

The GuardShield Safe 4 safety light curtain consists of a non-matched pair of optic units, for example, transmitter and receiver with the same protective height and resolution. The transmitter and receiver operate on +24V DC. The maximum distance between transmitter and receiver is referred to as the protective field width or range. The protective field height is the distance between the first and last beam in the device.

The transmitter emits sequential pulses of infrared light, which the GuardShield Safe 4 receiver receives and processes. The synchronization of the timing of the emission and reception of infrared light pulses are accomplished optically by the first beam that is next to the GuardShield Safe 4 status indicators. This beam is referred to as the synchronization beam. Because the GuardShield Safe 4 transmitter and receiver are optically synchronized, no electrical connection is required between the transmitter and receiver.

The GuardShield Safe 4 receiver has two safety outputs, Output Signal Switching Devices (OSSDs). When the GuardShield Safe 4 transmitter and receiver are properly powered and aligned, all OSSDs are current sourcing +24V DC with a switching capacity of 300 mA. The two safety OSSDs are cross monitored and short-circuit protected. Interruption of the sensing field causes the receiver to switch the sourced current OFF (0V DC).

Restoring the GuardShield Safe 4 sensing field causes all outputs (OSSDs) to switch to the active high state (resume current sourcing +24V DC with a switching capacity of 300 mA).

GuardShield Safe 4 operates in the guard only mode with automatic restart. Other modes of operation, for example, PSDI mode (break mode), muting, external relay monitoring (EDM) can be realized using external safety devices.

The GuardShield Safe 4 safety light curtain consists of a transmitter and a receiver.

Figure 1 - Components of the GuardShield Safe 4 Safety Light Curtain

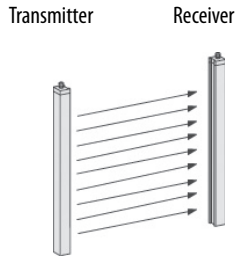

The protective field and the active elements respectively, are clearly recognized as black surfaces with the integrated optical lenses.

The width of the protective field is derived from the length of the light path between sender and receiver and must not exceed the maximum rated width of the protective field

- 0...9 m (0...22.9 ft) for 14 mm (0.55 in.) resolution, or
- 0...18 m (0...59.1 ft) for 30 mm (1.18 in.) resolution, or
- 5...30 m (16.4...98.4 ft) for 30 mm (1.18 in.) resolution.

Perimeter Systems (PAC)

Perimeter systems are produced with several single-beam light barriers. But the flexibility of the GuardShield Safe 4 system also allows the production of vertical entry safeguard according to the standard EN ISO 13855 [2010]. Such systems are composed of active and passive elements in one compact profile. The element length of each is 120 mm (4.72 in.) (variations are given in the Appendix A).

The protective field and the active elements respectively, are clearly recognized as black surfaces with the integrated optical lenses. The areas that are not monitored (passive elements) are also clearly indicated as yellow surfaces.

Figure 2 - Perimeter Systems (2-, 3-, and 4-beams) According to EN ISO 13855 (2010)

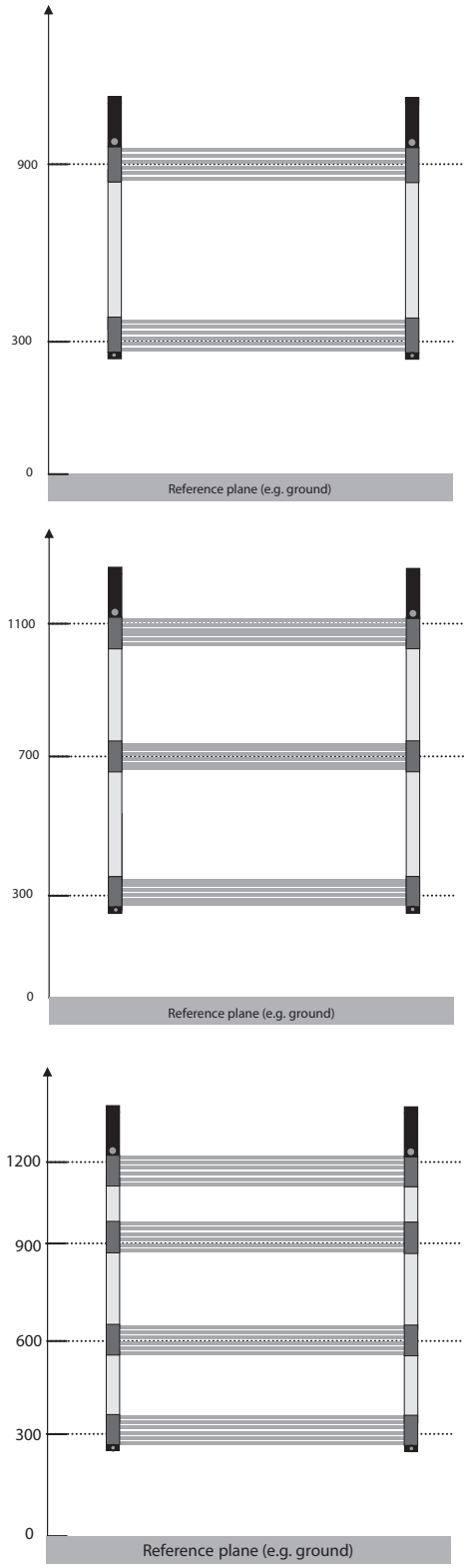

Examples of Range of Use

The GuardShield Safe 4 safety light curtain operates as a proper protective device only if the following conditions are met:

- The control of the machine must be electrical.
- The controlled machine must be able to be stopped anywhere in the machines stroke or cycle.
- The transmitter and receiver must be mounted such that access to the hazard is only through the protective field of the light curtain.
- The restart button must be located outside the hazardous area such that a person working inside the hazardous area cannot operate it.
- The statutory and local rules and regulations must be observed when installing and using the device.

IMPORTANT Additional measures can be necessary to confirm that the ESPE does not fail to danger when other forms of light radiation are present in a particular application. For example, use of cableless control devices on cranes, radiation from weld spatter or effects from strobe lights).

GuardShield Safe 4 Laser Alignment

The laser light source in the Integrated Laser Alignment system of the GuardShield Safe 4 safety light curtains is a Class 2, eye safe laser diode with a wavelength of 630 nm.

This Class 2, eye safe laser is switched from a low output power state to a high output power state (and back again) with control circuitry, which detects reflected laser light from a temporary blockage of the emitted laser light. This detection happens when a finger is placed over the laser overlay window. There is also an automatic shutdown feature that switches the laser diode from the high-power state to the low-power state if there is no finger or other interruption that is detected for 5 minutes.

During the high output mode of operation, the laser is pulsed at a rate of approximately 2 Hz to facilitate finger detection in high ambient light conditions.

ATTENTION: To prohibit exposure to laser radiation, do not expose your eyes to the laser. Turn off ILAS if not in use.

Safety Functions

All GuardShield Safe 4 safety light curtains are operated as on/off devices. As a result, the OSSD outputs switch off/on according to an obstruction or clearing of the detection field.

IMPORTANT The protective system must be tested for proper operation after each change to the configuration.

System Testing

The GuardShield Safe 4 safety light curtain performs a complete system self-test at power-up and switches to the ON state if the system is properly aligned and the protective field is unobstructed.

External Test (Machine Test Signal)

Normally the test input at the transmitter is installed with a short circuit jumper to activate the transmitter. An external test signal to the GuardShield Safe 4 transmitter triggers a test cycle of the system. Supplying or removing a signal (+24V DC) via a N.C. or N.O. switch at the test input deactivates the transmitter during the test signal, simulating an interruption of the protective sensing field (see Electrical Installation on page 33).

Response Time

The response time of the GuardShield Safe 4 safety light curtain depends on the height of the protective field, the resolution, and the number of light beams (see Table 7...Table 10 on page 47...48).

IMPORTANT Determining Stop Time: The measurement of stop time (Ts) must include the stopping times of all devices in the stop circuit. Not including all device and control system elements when you calculate Ts results in an inaccurate safety distance calculation.

Notes:

Determine the Safety Distance

The light curtain must be mounted with proper safety distance

- From the point of danger
- From reflective surfaces

US Safety Distance Formula

ATTENTION: GuardShield™ Safe 4 safety light curtains must be mounted at a sufficient distance from the pinch point or point of operation hazard to confirm that the machine stops before your finger, hand, arms, or body reach the hazard.

This distance, referred to as the safety distance, must be properly calculated before determination of the safety light-curtain protective height and mounting the light curtains on the machine. Failure calculates this safety distance can result in operator injury.

IMPORTANT Regardless of the calculated safety distance, GuardShield Safe 4 safety light curtains can never be mounted closer than 6 inches from the point of operation or pinch point hazard.

In the United States, there are two formulas are used to calculate the proper safety distance. The first, the OSHA formula, is the minimum requirement for the calculation of the safety distance. The second formula, the one recommended by Rockwell Automation, is the ANSI formula, which incorporates additional factors to be considered when calculating the safety distance.

OSHA Safety Distance Calculation Formula

The OSHA safety distance formula as specified in CFR Subpart O 1910.217 is as follows:

Ds =	$63 \times T_S$
Ds	Safety Distance in inches
63	Is the OSHA recommended hand speed constant in inches per second?
Ts	Is the total stop time of all devices in the safety circuit measured in seconds? This value must include all components that are involved to stop the hazardous motion of the machinery. For a mechanical power press, it is the stopping time that is measured at approximately the 90º position of the crankshaft rotation.

The T_S number must include the response times of all devices. This number includes the response time of the safety light curtain, the safety light curtain controller (if used), the machine control circuit, and any other devices that react to stop the hazardous motion of the machinery. Not including the response time of a device or devices in the stop time calculation results in insufficient safety distance for the application. This distance results in operator injury.

The ANSI Safety Distance Formula

The ANSI safety distance formula, which is the Rockwell Automation recommended formula, is as follows:

$D_S =$	$K \times (T_S + T_C + T_r + T_{bm}) + D_{pf}$
Ds	Minimum safety distance between the safe guarding device and the nearest point of operation hazard, in inches.
K	Hand speed constant in inches per second. The ANSI standard value is 63 inches per second when the operator begins reaching toward the point of operation hazard from rest. NOTE: ANSI B11.19 1990 E4.2.3.3.5 states “The value of the hand speed constant, K, has been determined by various studies and although these studies indicate speeds of 63 inches/second to over 100 inches/second, they are not conclusive determinations. The employer should consider all factors, including the physical ability of the operator, when determining the value of K to be used.”
Ts	Stop time of the machine tool that is measured at the final control element.
Tc	Response time of the control system

A stop time measuring device measures T_s and T_c

Tr	Response time of the presence sensing device (safety light curtain) and its interface, if any. This value is stated by the device manufacturer or you measure it.
Tbm	Additional time that is allowed for the brake monitor to compensate for variations in normal stop time.
Dpf	Depth penetration factor. It is an added distance to allow for how far into the protective field an object, such as a finger or hand, can travel before being detected. D_{pf} is related to the object sensitivity of the safety light curtain. Object sensitivity is the smallest diameter object, which will be detected anywhere in the sensing field.

Example:

In opto-electronic safeguarding, such as with a perpendicular safety light curtain application with object sensitivity (effective resolution) less than 2.5 inches, the D_{pf} can be approximated based on the following formula:

$$D_{pf}\,(\text{inches}) = 3.4 \times (\text{Object Sensitivity} - 0.276), \text{ but not less than } 0.$$

European Safety Distance Formula

A safety distance must be maintained between the light curtain and the point of danger. This safety distance confirms that the point of danger can only be reached after the dangerous state of the machine has been removed.

The safety distance as defined in EN ISO 13855 and EN ISO 13857 depends on:

- Stopping/run-down time of the machine or system. (The stopping/run-down time is shown in the machine documentation or must be determined by taking a measurement.)
- Response time of the protective device, for example, GuardShield Safe 4 safety light curtain (see Response Time on page 17).
- Reach or approach speed.
- Resolution of the light curtain and/or beam separation.

Figure 3 - Safety Distance from the Point of Danger

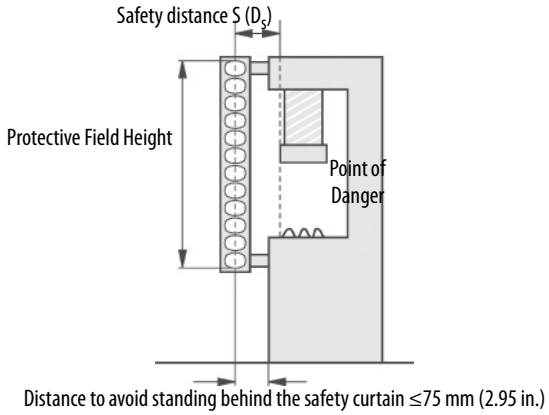

How to Calculate the Safety Distance S for GuardShield Safe 4 Systems (Resolution ≤40 mm)

According to EN ISO 13855 and EN ISO 13857.

> First, calculate S with the following formula:
$S = 2000 \times T + 8 \times (d - 14)$ [mm]

Where ...

T =	Stopping/run-down time of the machine + response time of the protective device [s]
d =	Resolution of the light curtain [mm]
S =	Safety distance [mm]

The reach/approach speed is already included in the formula.

- If the result S is ≤ 500 mm (19.6 in.), then use the determined value as the safety distance.
- If the result S is > 500 mm (19.6 in.), then recalculate S as follows:
  $S = 1600 \times T + 8 \times (d - 14)$ [mm]
- If the new value S is > 500 mm (19.6 in.), then use the newly determined value as the minimum safety distance.
- If the new value S is ≤ 500 mm (19.6 in.), then use 500 mm (19.6 in.) as the safety distance.

Example:

Stopping/run-down time of the machine = 290 ms
Response time = 30 ms
Resolution of the light curtain = 14 mm (0.55 in.)
T = 290 ms + 30 ms = 320 ms = 0.32 s
$S = 2000 \times 0.32 + 8 \times (14 - 14) = 640$ mm (25.1 in.)
S > 500 mm (19.68 in.), therefore:
$S = 1600 \times 0.32 + 8 \times (14 - 14) =$ 512 mm (20.1 in.)

How to Calculate the Safety Distance S for GuardShield Safe 4 PAC Systems

In the case of perimeter systems or light curtains with a resolution d > 40 mm (1.57 in.), the safety distance is calculated for vertical mounting light curtains and horizontal approach, according to the formula:

S = 1.6 mm (0.06 in.)/ms x T + 850 mm (33.46 in.)

More detailed information regarding safety distance and safety heights can be found in standard EN 13855 (2010).

Minimum Distance from Reflecting Surfaces

The infrared light from the sender can be reflected off shiny surfaces and received by the system receiver. If this condition occurs, it can result in an object not being detected when it enters the GuardShield Safe 4 sensing field.

All reflecting surfaces and objects (for example, material bins) must therefore be at a minimum distance from the protective field of the system. The minimum distance a depends on the distance D between sender and receiver.

Figure 4 - Minimum Distance from Reflective Surfaces

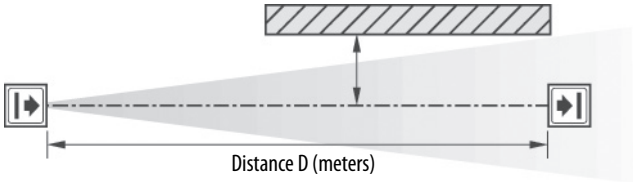

How to Determine the Minimum Distance from the Reflecting Surfaces:

- Determine the distance D [m] sender-receiver
- Read the minimum distance a [mm] from the graph:

Figure 5 - Graph, Minimum Distance from Reflective Surfaces

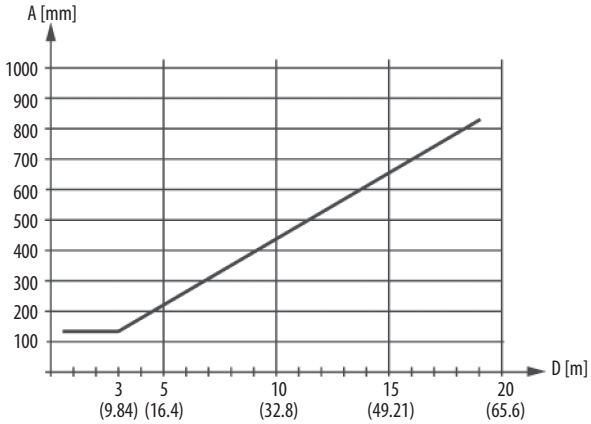

The effective aperture angle for the GuardShield Safe 4 system is ±2.5° at a mounting distance of >3.0 m (9.8 ft). Calculate the minimum distance to reflective surfaces depending on the distance between the transmitter and the receiver, with an aperture angle of ±2.5°. Or take the appropriate value from the Table 1.

Table 1 - Minimum Distance

Distance Between Transmitter and Receiver (Range D) [m (ft)]	Minimum Distance A [mm (in.)]
0…3.0 (0…9.8)	135 (5.31)
4.0 (13.1)	175 (6.88)
5.0 (16.4)	220 (8.66)
6.0 (19.6)	265 (10.43)
7.0 (22.9)	310 (12.2)
10.0 (32.8)	440 (17.32)
16.0 (52.4)	700 (27.55)

Formula: A = tan 2.5° x D [mm]

A = minimum distance to reflective surfaces
D = distance between transmitter and receiver

Installation and Mounting

This section describes the preparation, selection, and installation of the GuardShield™ Safe 4 safety light curtain. Mount and connect both transmitter and receiver.

IMPORTANT The installation of the GuardShield Safe 4 safety light curtain must be such that access to the hazard is only possible through the sensing field of the GuardShield Safe 4 safety light curtain. Auxiliary safe guarding can be required with the GuardShield Safe 4 safety light curtain to meet this requirement.

Determine if the machinery, on which the GuardShield Safe 4 safety light curtain is to be mounted, meets the requirements as specified in the beginning of this manual. For instance, the machinery must be able to stop anywhere in its stroke or cycle, consistently and repeatedly.

Alignment Procedure

Standard GuardShield Safe 4 Safety Light Curtain

The GuardShield Safe 4 safety light curtain is offered with an integrated laser alignment system. This system has a constantly powered Class 2, eye safe laser in the bottom of the GuardShield Safe 4 transmitter and in the top of the GuardShield Safe 4 receiver. Each laser emits a low level of visible light. Simply block this light below the finger symbol to cause the light to be reflected back to a photo sensor, which changes the condition of the laser light. If this light is at a low level, interruption causes the laser to emit a highly visible level of light. This interruption of the visible light in the same location causes the laser to switch to a low level of emission. The emission of visible light will also change to a low level after 5 minutes of activation.

GuardShield Safe 4 Safety Light Curtain with Integrated Laser Alignment

Cycle power to assure that the system powers up and goes to the ON state.

1. Properly locate the GuardShield Safe 4 pair from the point of operation hazard after performing the safety distance calculation.
2. Use the GuardShield Safe 4 mounting brackets to mount the transmitter and receiver so that they are facing one another and are positioned in the same direction. A reference would be that the status indicators are opposite one another. They must be parallel to each other and be positioned at the same height. Turn on power to GuardShield Safe 4 system.

Figure 6 - Layout of the Transmitter/Receiver

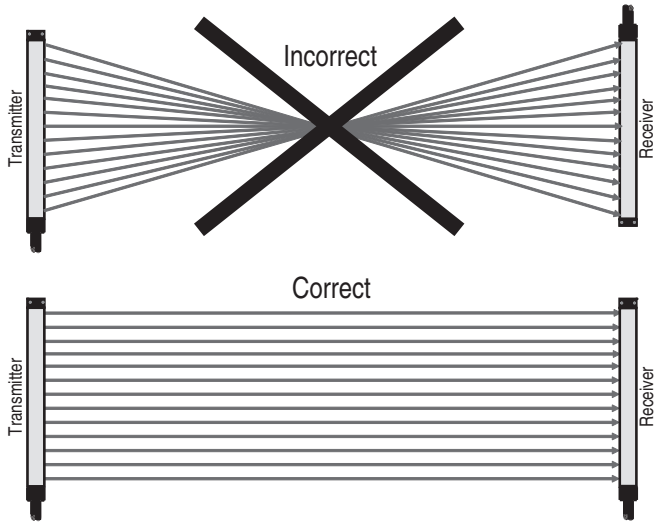

3. Turn on each laser by placing a finger or hand in front of each laser (close to the finger symbol ☞).
4. For optimal alignment, adjust the transmitter and receiver in such a way that both visible laser beams press the laser targets opposite each laser. A small deviation around the target is allowable and are harmless as long as they are within the aperture angle.
5. Tighten all screws firmly.
6. Switch off the ILAS when aligned.

When mounting Perimeter Systems, adjust the heights according to the recommendations in the local standards and regulations (Europe: EN ISO 13855 [2010]) (see Figure 2 on page 15).

The GuardShield Safe 4 safety light curtain is suitable for most operating environments (IP65 environmental rating). Proper safety distance and adequate protective height must be observed.

Remarks to ILAS

Due to dimensional tolerances, the visible ILAS laser beam can be located off center from the target when the light curtain is aligned optimally in the center of the operating range. The optimal operating point can be found after alignment with ILAS when moving the axis in X- (left, right) and Z- (up, down) direction. The optimal operating point is in the middle of the two endpoints, where the receiver output switches from active to inactive condition.

Figure 7 - Adjustment with ILAS

For optimal alignment of the light curtain, the ILAS light point can deflect from the ILAS target point. The maximum deflection adds up to the following value due to the operating distance:

2 m (6.56 ft)	R = 7 mm (0.27 in.)	D = 7 mm (0.27 in.)
6 m (19.7 ft)	R = 20 mm (0.79 in.)	D = 21 mm (0.83 in.)
9 m (29.5 ft)	R = 30 mm (1.18 in.)	D = 32 mm (1.26 in.)
18 m (59.0 ft)	R = 60 mm (2.36 in.)	D = 63 mm (2.48 in.)
30 m (98.4 ft)	R = 99 mm (3.90 in.)	D = 105 mm (4.13 in.)

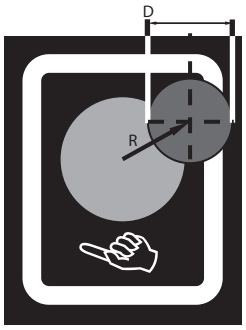

Correct Installation

Operators cannot reach hazardous machine parts without passing through the protective field.

Operators must not step between protective field and hazardous machine parts (by-pass prevention).

Incorrect Installation

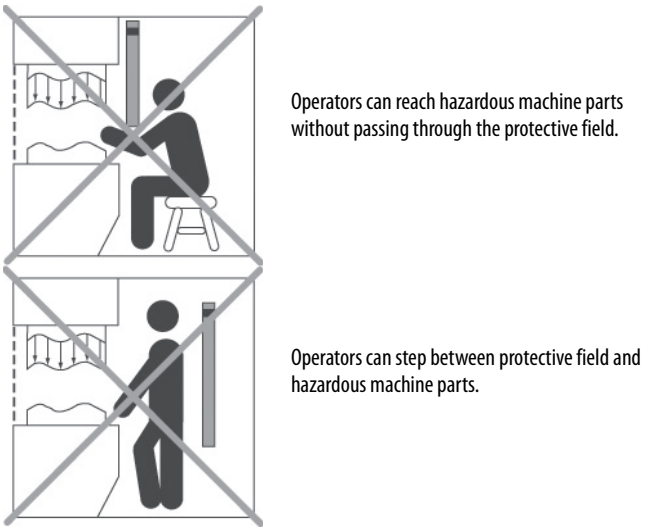

The GuardShield Safe 4 safety light curtain must be mounted at the proper distance from the point of operation hazard. This distance is referred to as the Safety Distance.

Figure 8 - Determine Machine Stop Time and Safety Distance

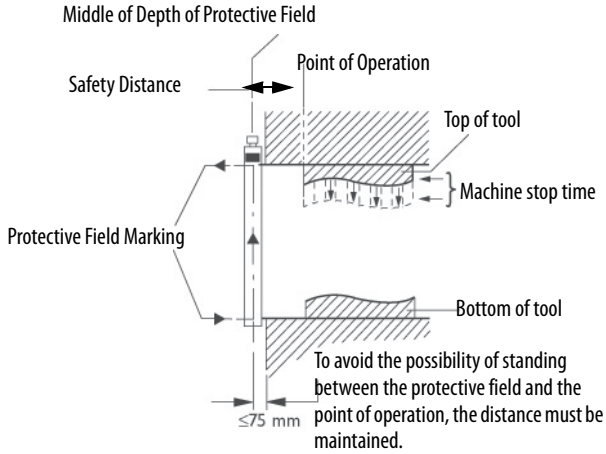

After installation and alignment of the GuardShield Safe 4 safety light curtain, the protection field has to be tested with the test rod for the corresponding resolution (14 mm or 30 mm) according to Figure 9.

Figure 9 - Correct Testing of the Protective Field Using a Test Rod

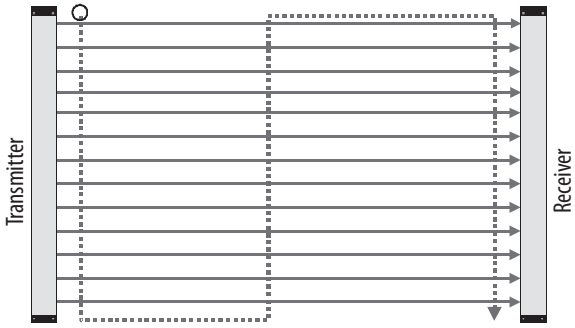

Multiple GuardShield Safe 4 Safety Light Curtains

When two or more GuardShield Safe 4 safety light curtains are mounted close to one another, it can be possible for the receiver of one GuardShield Safe 4 pair to receive infrared light from the transmitter of another GuardShield Safe 4 pair.

There are various techniques to prohibit or reduce the possibility of optical interference from GuardShield Safe 4 safety light curtains that are mounted in the same plane. The simplest method is to alternate transmitter and receiver pairs so that the receiver from a second pair is facing away from the transmitter of another pair nearby. It is also possible to place a physical barrier between pairs to prohibit the infrared light from reaching another GuardShield Safe 4 pair.

Figure 10 - Multiple GuardShield Safe 4 Alignment Options

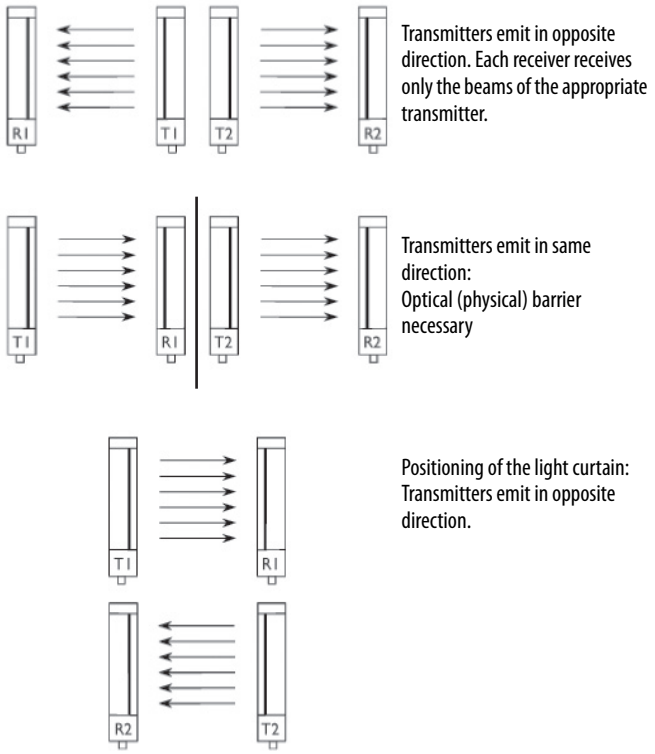

Mounting Brackets

The GuardShield Safe 4 safety light curtain is mounted using brackets, which attach to the side of both the transmitter and receiver. In applications with higher shock and vibration, it can be necessary to use additional brackets to mount the GuardShield Safe 4 safety light curtain at a proper safety distance from the machinery hazard.

Figure 11 - Different Mounting Brackets for Safe 4 Safety Light Curtains

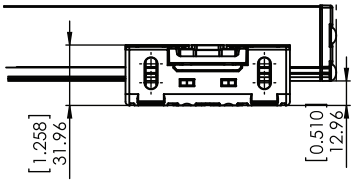

450L-AM-SM
Standard mounting bracket for products that are shipped after April 2017 (REV C)—supplied with each light curtain. Adjustable by ± 5° (two brackets per kit).

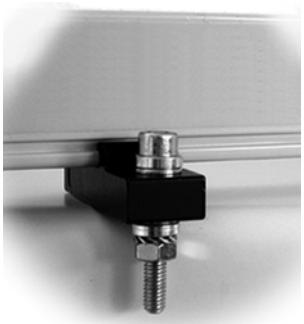

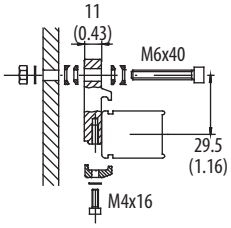

445L-AF6140
Standard mounting bracket for products that are shipped before April 2017 (Rev B)
For side mounting
Adjustable by ± 4°
(Two brackets per kit.)

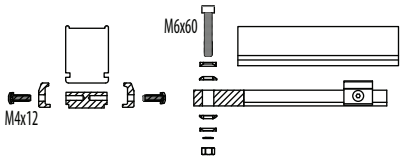

445L-AF6144
Vertical mounting brackets (optional)
For mounting in the vertical axis of the light curtain
Adjustable by ± 4°
(Two brackets per kit.)

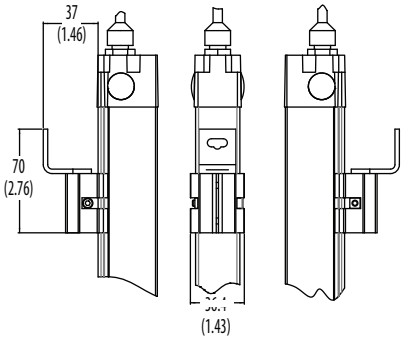

445L-AF6141
180° Mounting, rotation ±90°, for applications where the mounting angle is not set using the mounting frame.
(Two brackets per kit.)

Safe 4 Shock Mounting Kit

Rockwell Automation offers a shock and vibration isolation kit for vertically mounting the Safe 4 safety light curtain. The internal optical and electronic components of the Safe 4 safety light curtain are effectively protected with this kit. The best performance of the shock and vibration isolation kit is attained when the kit is used with the Safe 4 vertical mounting brackets (catalog number 445L-AF6144).

Figure 12 - Shock Isolator

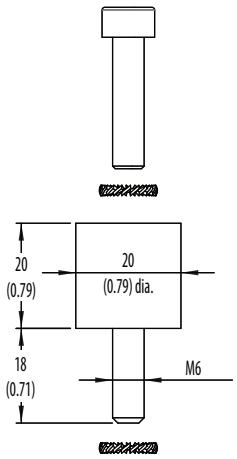

Notes:

Electrical Installation

Connections

Power Supply

The external voltage supply (+24V DC) must meet the requirements of IEC 61496-1. In addition, the following requirements have to be fulfilled:

- The power supply bridges a short-term power failure of 20 ms.
- The power supply has double insulation between the primary and the secondary side.
- The power supply is guarded against overload.
- The power supply corresponds to the guidelines of the EWG (industrial environment).
- The power supply corresponds to the Low Voltage Directives.
- The grounded conductor of the power supply device must be connected to a grounded conductor PE.
- The maximum deviation of the voltage levels is 24V DC ±20%.

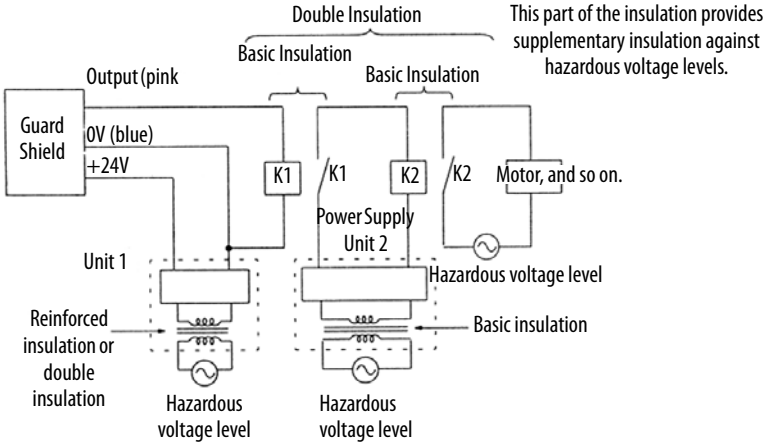

Cables/Connectors

The GuardShield™ Safe 4 transmitter and receiver connectors are 5-pin M12 quick-disconnect connectors. Shielded and nonshielded cordsets are offered in lengths from 2...30 m (6.56...98.4 in.).

Figure 13 - Pin Assignment of the M12 Connectors

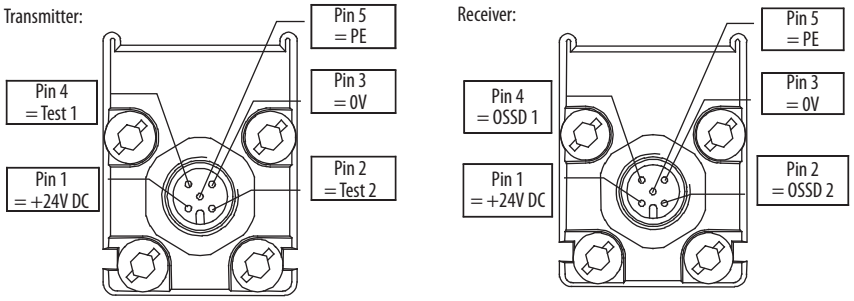

M12 Connector Dimensions

Figure 14 - Five-pin Female Connection for Safe 4 Safety Light Curtain [mm (in.)]

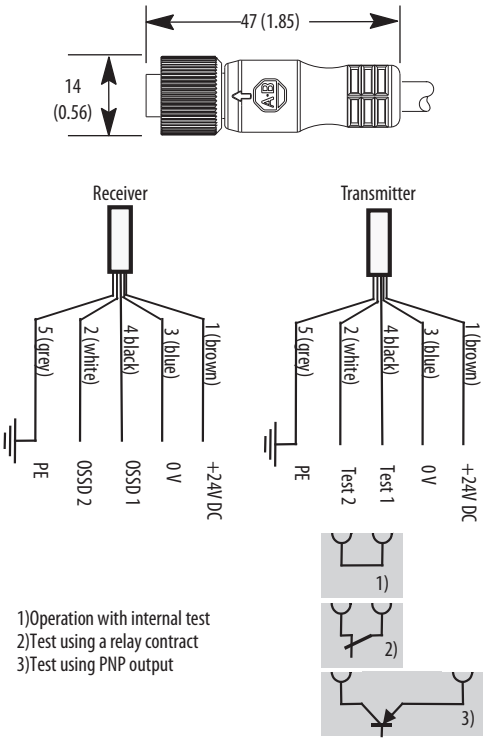

Table 2 - GuardShield Safe 4 Receiver Connector Pin Assignments and Wire Colors

Female Top View	Color	Pin No.	Signal Receiver
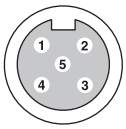	Brown	1	+24V
	White	2	OSSD 2
	Blue	3	0V
	Black	4	OSSD 1
	Gray	5	Ground (PE)

Table 3 - GuardShield Safe 4 Transmitter Connector Pin Assignments and Wire Colors

Female Top View	Color	Pin No.	Signal Receiver
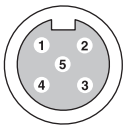	Brown	1	+24V
	White	2	Test 2
	Blue	3	0V
	Black	4	Test 1
	Gray	5	Ground (PE)

Test Input to Transmitter

Normally the test input at the transmitter is installed with a short circuit jumper to activate the transmitter. If an external test is desired, a contact can be connected to the test input).

The timing of test input is as follows:

Figure 15 - Test Timing Diagram

	Time	Value in ms
Response time on test signal	t_1	$\leq t_R + 15$
Time to test	t_2	$> t_1$
Restart time after test	t_3	≤ 800

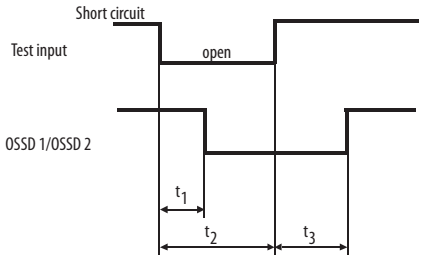

t_R means the response time of the respective Safe 4 type (see Date Code and Label on page 44).

Internal Test	Description	Value
Continuous test current	I	10 mA
Peak test current	I_P	100 mA
Time of peak test current	t_P	20 µs

Internal Test	Transmitter	Test Indicator Transmitter
Short circuited (closed)	Active	Green
Open	Inactive	Red

Bringing Into Operation

After the power has been applied to the GuardShield Safe 4 safety light curtain and the automatic power-up test is successfully completed, the green Power status indicator on the receiver and transmitter will light up. The system is now ready to operate.

The automatic power-up test is only successful, if transmitter and receiver are properly aligned, correctly connected and the protective field is not interrupted.

Any intrusion of an object into the protective field switches off the OSSD within the specified response time and the status indicator at the receiver toggles from green to red.

Outputs

The two redundant Output Signal Switching Devices (OSSD) are fully monitored. Any short circuits are detected. The maximum load is 0.3 A, higher currents are limited through short circuit protection. Increased output loads can be realized using external safety interfaces.

The output voltage at the solid-state outputs is dependent on the power supply and the output load.

Typical Wiring Diagram to MSR127 Safety Relay Module

The interfacing of the light curtain with the machine control has to be control reliability. For example, a correct interface with a safety PLC or safety relays with positive guided relay contacts.

ATTENTION: The safety devices and the interconnection to the machinery have to comply with the basic safety requirements as mentioned in the current regulations and standards.

Direct interfacing of a safety light curtain to machine control that does not meet the necessary safety integrity level. For instance, use of general-purpose PLCs or general-purpose relays can cause injury to persons.

Consult a professional safety engineer.

Typical Wiring Diagrams—Safe 4 or Safe 4 PAC

Connection with Guardmaster SI Safety Relay

Figure 16 - Safe 4 Safety Light Curtain to Guardmaster SI Safety Relay, Manual Reset

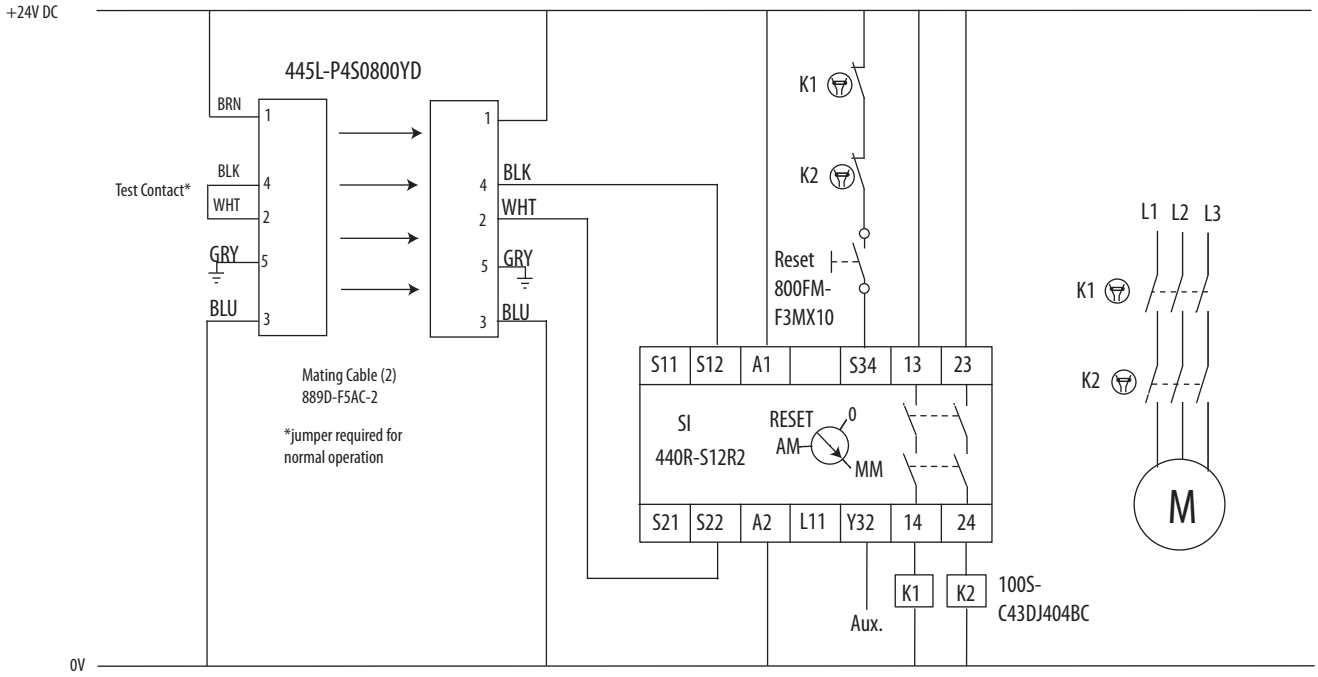

Figure 17 - Safe 4 or Safe 4 PAC Safety Light Curtain for Manual Reset Mode Using MSR127TP Safety Relay Module

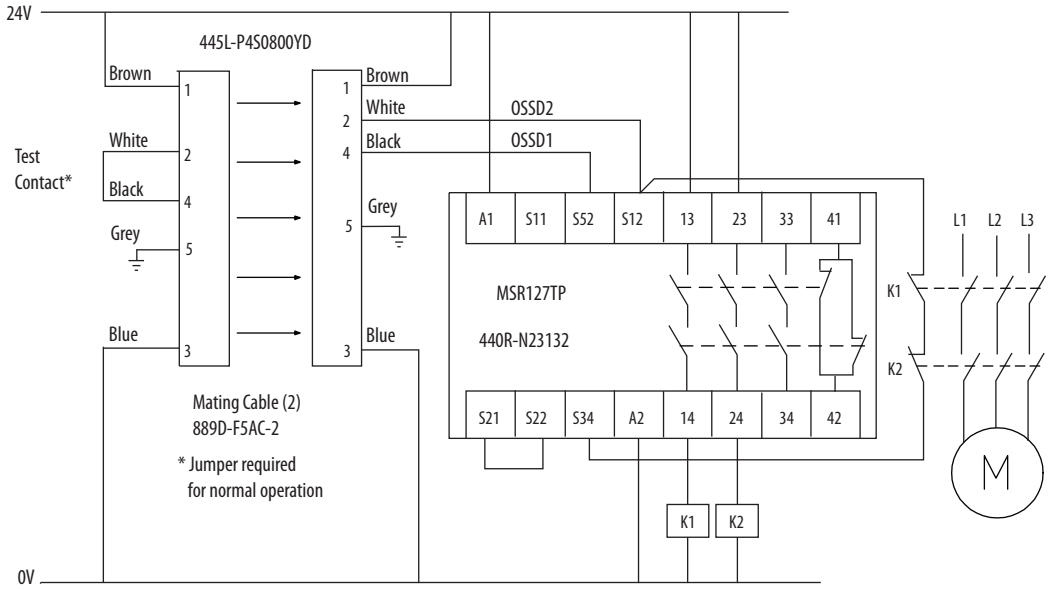

Figure 18 - Safe 4 or Safe 4 PAC Safety Light Curtain for Two Sensor Muting Using MSR42 Multi-function Safety Module and MSR45E Safety Relay Expansion Module

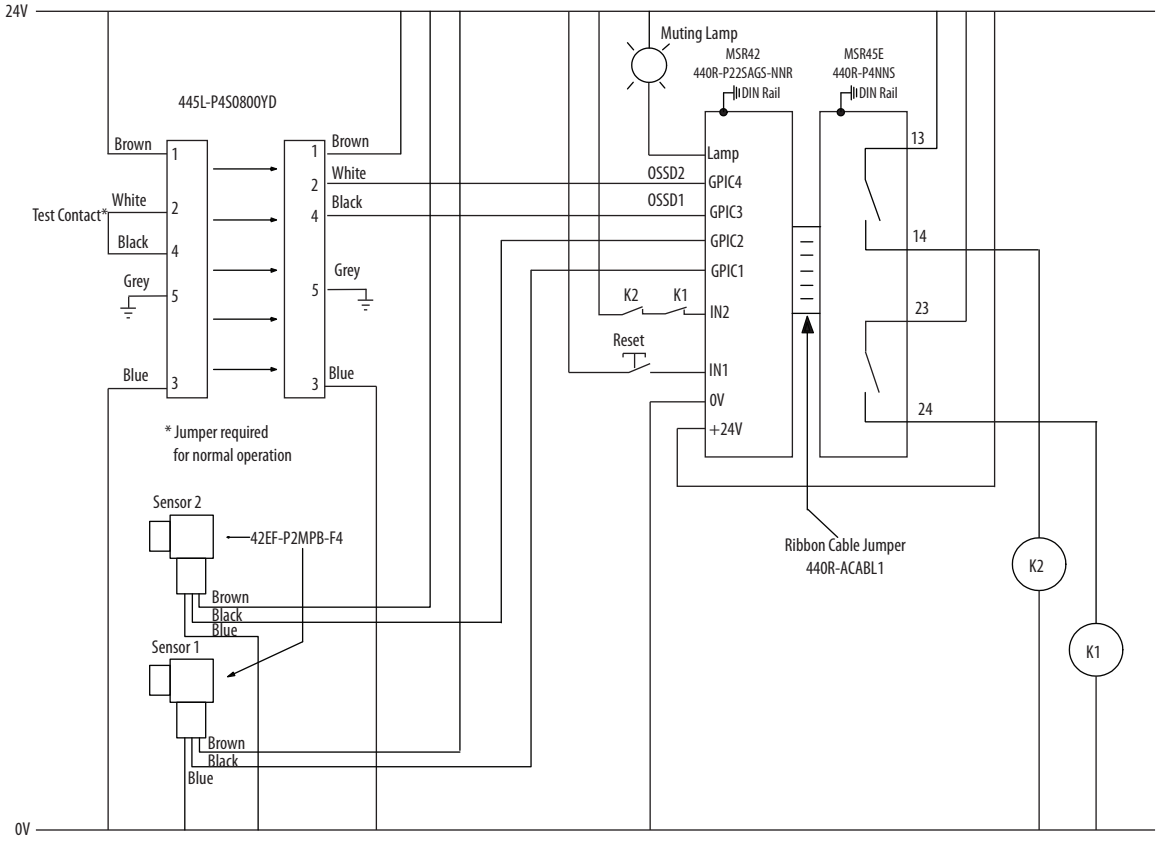

Troubleshooting

The light curtain conducts an internal self-test after startup. An appropriate signal combination on the status indicators of the transmitter or the receiver, indicates if an error occurs.

ATTENTION: Assure that all power to the machine, and safety system is disconnected during electrical installation.

System Status Indicators

Figure 19 - Status Indicators

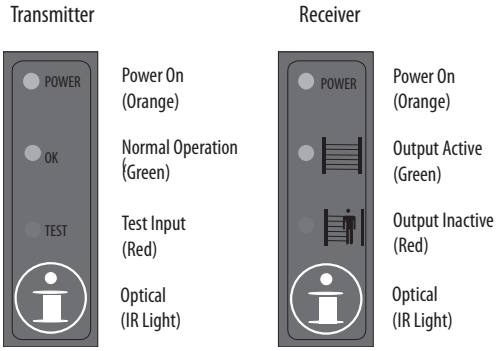

Possible errors and operation status are indicated with the status indicators on the transmitter and receiver.

The following combinations are relevant:

Table 4 - Transmitter

Status	Orange (Power)	Status Indicator	
		Green (Ok)	Red (Test)
No power supply (external)	Off	Off	Off
Test input closed (external)	On	On	Off
Test input open (external)	On	Off	On
Controller error (internal)	Flashing	Off	On
Protective field error (internal)	Flashing	Off	Flashing

Table 5 - Receiver

Status	Orange (Power)	Status Indicator	
		Green (Protective Field Not Interrupted)	Red (Protective Field Interrupted)
No power supply (external)	Off	Off	Off
No sufficient power (external)	On	Off	Off
OSSD on (on-load operation, protective field not interrupted, normal)	On	On	On
OSSD off (off-load operation, protective field interrupted, or insufficient alignment of the system)	Flashing	Off	On
OSSD error (external, short circuit between OSSD 1 and OSSD 2, towards 0V or 24V DC)	All 3s short time	Off	Flashing
Controller error (internal)	Irregular Flashing	Off	On
Protective field error (internal)	Flashing	Off	Flashing

External error: An external interface error can be resolved by correcting the installation, due to

1. Receiver: Short circuit of both OSSDs, of OSSD to $U_{sp,}$ or of OSSD to GND
2. Transmitter: Test input open
3. No power or power supply too low
4. Inadequate adjustment of transmitter and receiver

Internal error (orange Power status indicator flashes irregularly): Exchange Component

Table 6 - Normal Operation

Transmitter	Receiver	Operation Status
Test input closed closed	OSSD on OSSD off	Protective field free Protective field interrupted
Test input open	OSSD off	Test active

IMPORTANT Before power-up the GuardShield Safe 4 system, the responsible person can review the following checklist.

Checklist

Before the initiation of the GuardShield™ Safe 4 safety light curtain the responsible person can work through the following checklist.

Cable check before initiation:

1. The power supply is solely connected to the GuardShield Safe 4 safety light curtain.
2. The power supply is a 24V DC device, which must comply to all applicable standards of the Machinery Directive 2006/42/EC, and the product standard (IEC 61496).
3. Proper polarity of the power supply at the GuardShield Safe 4 safety light curtain.
4. The transmitter connection cable is properly connected to the transmitter, the receiver connection cable is properly connected to the receiver.
5. The double insulation between the light curtain output and an external potential is confirmed.
6. The OSSD outputs are not connected to +24V DC or 0V.
7. The connected switching elements (load) are not connected to 24V DC.
8. For a self-testing safety light curtain system, the test output and input of the transmitter are short circuited.
9. No connection to a conventional power supply.
10. If two or more GuardShield Safe 4 safety light curtains are to be used, make sure that each system is properly installed, to avoid optical interference.

Switch on the GuardShield Safe 4 safety light curtain and check its function by observing the following:

Two seconds after switching on, the system starts to work properly if the protection field is free of obstructions.

Notes:

Safety Instructions

Maintenance

ATTENTION: Never operate the GuardShield™ Safe 4 safety light curtain before conducting the following inspection. Improper inspection can lead to serious injury.

IMPORTANT
- For safety reasons, record all inspection results.
- Only persons, who clearly understand the functioning of the GuardShield Safe 4 safety light curtain and of the machine, can conduct an inspection.
- If installer, engineer, and operator are different people, make sure that you have sufficient information available to conduct the inspection.

Daily Inspection

1. Approach to hazardous machine parts must only be possible by passage through the protective field of GuardShield Safe 4 safety light curtain.
2. Operators cannot step through the sensing area while working on dangerous machine parts.
3. The safety distance of the application is bigger than the calculated value.
4. The optic front cover is not scratched or dirty.

Operate the machine and check, if the hazardous movement stops under the following circumstances.

1. The protective field is interrupted.
2. The test rod directly in front of the transmitter, directly in front of the receiver, and in the middle between transmitter and receiver interrupts the protective field and the hazardous machine movement stops immediately.
3. No hazardous machine movement while the test rod is anywhere within the protective field.
4. The power supply of the GuardShield Safe 4 safety light curtain is turned off.
5. If the blanking function is activated, check all sections of the protective field with the appropriate test piece.

IMPORTANT If any of the conditions do not result in the hazardous motion of the machine ceasing, do not allow the protected machine to be placed in operation.

Six-month Inspection

Check the following items every 6 months or whenever a machine setting was changed.

1. Machine stops or does not obstruct any safety function.
2. The latest machine or connection modifications have no effect on the control system.
3. The outputs of the GuardShield Safe 4 safety light curtain are properly connected to the machine.
4. The total response time of the machine is shorter than the calculated value.
5. Cables and plugs of the GuardShield Safe 4 safety light curtain are in good condition.
6. Mounting brackets, caps and cables are tightly secured.

Cleaning

If the optic front cover of the GuardShield Safe 4 safety light curtain is dirty, the outputs of the GuardShield Safe 4 safety light curtain turn off. Take a clean, soft cloth and rub without pressure. Do not apply aggressive or abrasive cleaner, which can attack the surface.

Date Code and Label

AABCCDEE

AA =	Production place (AL=Mexico, 3T= Switzerland)	
B =	Year	
CC =	Day (LA = 001, LB = 002, . . .)	
D =	Internal Rockwell Automation product code	
	4 =	GS Safe4 System
	5 =	GS Safe4 Tx
	6 =	GS Safe4 Rx
EE =	Counter (AA=001, AB=002, . . .)	

Example: 3T0QI5AA:

AA =	3T	= Produced in Switzerland)
B =	0	= Year 2010
CC =	QI	= Day 138 = 19 May
D =	5	= Transmitter
EE =	AA	= 001

The address that is printed on the stick and on the packaging labels refers to the Rockwell Automation global address. For the local addresses of specific regional offices, see the headquarters list on the back of this document.

Technical Specifications

Attribute	**445L-P4S*x*YD, 445L-P4L*x*YD, 445L-P4X*x*YD**
Light Beams	Min. 8 - Max. 256
Protective Field	120…1920 mm (4.7…75.6 in.) in 120 mm (4.7 in.) increments for Standard GuardShield Safe 4 safety light curtain
Resolution	14 mm (0.55 in.), 30 mm (1.18 in.)
Range	14 mm (0.55 in.); 0…9.0 m (0…29.5 ft), 30 mm (1.18 in.); 0…18.0 m (0…59.0 ft) 30 mm (1.18 in.); 5…30.0 m (16.4…98.4 ft) PAC: 2, 3, 4 beams: 5…30.0 m (16.4…98.4 ft); 0…18.0 m (0…59.0 ft)
Response Time	OSSD – ON to OFF: (Reaction times); see Table 7…Table 10 on pages 47…48
Power Supply	24V DC ±20%; Power supply must meet the requirements of IEC 60204-1 and IEC 61496-1.
Power Consumption, Max	<500 mA (unloaded)
IR Transmitter	Infrared status indicator (wave length 950 nm)
Aperture Angle	According to IEC 61496-2
Operating Condition	IR transmitter ON
Functions, Guard	On/Off operation with clear/obstructed detection area
Functions, Test Function	Triggering of system test via external switch-
Input Transmitter Machine Test Signal	Minimum duration 100 ms Voltage level for Logic 0: 0…5V DC Voltage level for Logic Hi 1: > 16V DC
Outputs: Safety Outputs (OSSDs)	2 solid-state outputs, max. switching capacity 300 mA, short circuit protection
QD Connectors	5-pin M12 for transmitter and receiver
Cable Length, Max	60 m (197 ft)
Ambient Temperature, Operation	0…55 °C (32…131 °F)
Ambient Temperature, Storage	-20…+60 °C (-4…+140°F)
Humidity of the Air	Up to 95% (without condensation) 20…55 °C (68…131 °F)
Enclosure Rating	IP65
Vibration Resistance	Per IEC 61496-1, IEC 60068-2-6 Frequency 10…55 Hz Amplitude 0.35 mm (0.013 in.)
Shock	Per IEC 61496-1, IEC 60068-2-29 Acceleration 10 g (0.35 oz), Duration 16 ms
Material	Housing: Aluminum Coating: Polyester powder coating Cover: PC (Polycarbonate)
Approximate Dimensions (cross section)	30 x 40 mm (1.18 x 1.57 in.)
Accessories Included	Test rod, mounting brackets, operating instructions
Approvals	TÜV Rheinland, IEC 61496 Parts 1and 2, UL 61496 Parts 1 and 2, UL 1998
Safety Classification	Type 4 per EN/IEC 61496, Category 4 EN/ISO 13849, SIL 3, IEC 61508, SIL CL3, EN 62061, PLe, EN/ISO 13849
PFHd (Probability of dangerous failure per hour according to EN/IEC 62061 and EN/IEC 61508 (Continuous and high demand mode))	7.93E-9 (worst case figure; 32 modules x 30 mm [1.18 in.], L = 3840 mm[151.18 in.])
T_M (mission time)	20 years (EN ISO 13849)

Table 7 - Standard GuardShield Safe 4 with Integrated Laser Alignment System, 14 mm Resolution Catalog Numbers

Light Curtain Pair	Transmitter	Receiver	Resolution [mm (in.)]	Protective Heights [mm (in.)]	Response Time	Range [m (ft.)]	Weight per Pair (kg)
445L-P4L0120YD	445L-T4L0120YD	445L-R4L0120YD	14 (0.55)	120 (4.7)	10.5 ms	0…9 (0…29.5)	1.9
445L-P4L0240YD	445L-T4L0240YD	445L-R4L0240YD	14 (0.55)	240 (9.5)	15.8 ms	0…9 (0…29.5)	2.2
445L-P4L0360YD	445L-T4L0360YD	445L-R4L0360YD	14 (0.55)	360 (14.2)	21.2 ms	0…9 (0…29.5)	2.6
445L-P4L0480YD	445L-T4L0480YD	445L-R4L0480YD	14 (0.55)	480 (18.9)	26.3 ms	0…9 (0…29.5)	3.0
445L-P4L0600YD	445L-T4L0600YD	445L-R4L0600YD	14 (0.55)	600 (23.6)	34.6 ms	0…9 (0…29.5)	3.4
445L-P4L0720YD	445L-T4L0720YD	445L-R4L0720YD	14 (0.55)	720 (28.4)	36.8 ms	0…9 (0…29.5)	4.0
445L-P4L0840YD	445L-T4L0840YD	445L-R4L0840YD	14 (0.55)	840 (33.1)	42.2 ms	0…9 (0…29.5)	4.4
445L-P4L0960YD	445L-T4L0960YD	445L-R4L0960YD	14 (0.55)	960 (37.8)	47.5 ms	0…9 (0…29.5)	4.8
445L-P4L1080YD	445L-T4L1080YD	445L-R4L1080YD	14 (0.55)	1080 (42.5)	52.8 ms	0…9 (0…29.5)	5.1
445L-P4L1200YD	445L-T4L1200YD	445L-R4L1200YD	14 (0.55)	1200 (47.2)	58.1 ms	0…9 (0…29.5)	5.9
445L-P4L1320YD	445L-T4L1320YD	445L-R4L1320YD	14 (0.55)	1320 (52)	63.4 ms	0…9 (0…29.5)	6.3
445L-P4L1440YD	445L-T4L1440YD	445L-R4L1440YD	14 (0.55)	1440 (56.7)	68.7 ms	0…9 (0…29.5)	6.7
445L-P4L1560YD	445L-T4L1560YD	445L-R4L1560YD	14 (0.55)	1560 (61.4)	74 ms	0…9 (0…29.5)	7.0
445L-P4L1680YD	445L-T4L1680YD	445L-R4L1680YD	14 (0.55)	1680 (66.1)	79.3 ms	0…9 (0…29.5)	7.5
445L-P4L1800YD	445L-T4L1800YD	445L-R4L1800YD	14 (0.55)	1800 (70.9)	84.6 ms	0…9 (0…29.5)	7.8
445L-P4L1920YD	445L-T4L1920YD	445L-R4L1920YD	14 (0.55)	1920 (75.6)	85.5 ms	0…9 (0…29.5)	8.6

Table 8 - Standard GuardShield Safe 4 with Integrated Laser Alignment System, 30 mm Resolution, 0…18 m (0…59 ft) Range of Operation

Light Curtain Pair	Transmitter	Receiver	Resolution [mm (in.)]	Protective Heights [mm (in.)]	Response Time	Range [m (ft.)]	Weight per Pair (kg)
445L-P4S0120YD	445L-T4S0120YD	445L-R4S0120YD	30 (1.18)	120 (4.7)	7.9 ms	0…18 (0…59)	1.9
445L-P4S0240YD	445L-T4S0240YD	445L-R4S0240YD	30 (1.18)	240 (9.5)	10.5 ms	0…18 (0…59)	2.2
445L-P4S0360YD	445L-T4S0360YD	445L-R4S0360YD	30 (1.18)	360 (14.2)	13.2 ms	0…18 (0…59)	2.6
445L-P4S0480YD	445L-T4S0480YD	445L-R4S0480YD	30 (1.18)	480 (18.9)	15.8 ms	0…18 (0…59)	3.0
445L-P4S0600YD	445L-T4S0600YD	445L-R4S0600YD	30 (1.18)	600 (23.6)	18.5 ms	0…18 (0…59)	3.4
445L-P4S0720YD	445L-T4S0720YD	445L-R4S0720YD	30 (1.18)	720 (28.4)	21.1 ms	0…18 (0…59)	4.0
445L-P4S0840YD	445L-T4S0840YD	445L-R4S0840YD	30 (1.18)	840 (33.1)	23.8 ms	0…18 (0…59)	4.4
445L-P4S0960YD	445L-T4S0960YD	445L-R4S0960YD	30 (1.18)	960 (37.8)	26.3 ms	0…18 (0…59)	4.8
445L-P4S1080YD	445L-T4S1080YD	445L-R4S1080YD	30 (1.18)	1080 (42.5)	29.1 ms	0…18 (0…59)	5.4
445L-P4S1200YD	445L-T4S1200YD	445L-R4S1200YD	30 (1.18)	1200 (47.2)	31.6 ms	0…18 (0…59)	5.7
445L-P4S1320YD	445L-T4S1320YD	445L-R4S1320YD	30 (1.18)	1320 (52)	34.3 ms	0…18 (0…59)	6.1
445L-P4S1440YD	445L-T4S1440YD	445L-R4S1440YD	30 (1.18)	1440 (56.7)	37 ms	0…18 (0…59)	6.5
445L-P4S1560YD	445L-T4S1560YD	445L-R4S1560YD	30 (1.18)	1560 (61.4)	39.6 ms	0…18 (0…59)	6.9
445L-P4S1680YD	445L-T4S1680YD	445L-R4S1680YD	30 (1.18)	1680 (66.1)	42.3 ms	0…18 (0…59)	7.2
445L-P4S1800YD	445L-T4S1800YD	445L-R4S1800YD	30 (1.18)	1800 (70.9)	44.9 ms	0…18 (0…59)	7.5
445L-P4S1920YD	445L-T4S1920YD	445L-R4S1920YD	30 (1.18)	1920 (75.6)	47.6 ms	0…18 (0…59)	8.3

Table 9 - Standard GuardShield Safe4 with Integrated Laser Alignment System, 30 mm Resolution, 5…30 m (16.4…98.4 ft) Range of Operation Catalog Numbers

Light Curtain Pair	Transmitter (1)	Receiver (1)	Resolution [mm (in.)]	Protective Heights [mm (in.)]	Response Time [ms]	Range [m (ft.)]	Weight per Pair [kg]
445L-P4X0120YD	445L-T4X0120YD	445L-R4X0120YD	30 (1.18)	120 (4.7)	7.9	5…30 (16.4…98.4)	1.9
445L-P4X0240YD	445L-T4X0240YD	445L-R4X0240YD	30 (1.18)	240 (9.5)	10.5	5…30 (16.4…98.4)	2.2
445L-P4X0480YD	445L-T4X0480YD	445L-R4X0480YD	30 (1.18)	480 (18.9)	15.8	5…30 (16.4…98.4)	3.0
445L-P4X0600YD	445L-T4X0600YD	445L-R4X0600YD	30 (1.18)	600 (23.6)	18.5	5…30 (16.4…98.4)	3.4
445L-P4X0720YD	445L-T4X0720YD	445L-R4X0720YD	30 (1.18)	720 (28.4)	21.1	5…30 (16.4…98.4)	4.0
445L-P4X0840YD	445L-T4X0840YD	445L-R4X0840YD	30 (1.18)	840 (33.1)	23.8	5…30 (16.4…98.4)	4.4
445L-P4X1200YD	445L-T4X1200YD	445L-R4X1200YD	30 (1.18)	1200 (47.2)	31.6	5…30 (16.4…98.4)	5.9
445L-P4X1440YD	445L-T4X1440YD	445L-R4X1440YD	30 (1.18)	1440 (56.7)	37	5…30 (16.4…98.4)	6.7
445L-P4X1560YD	445L-T4X1560YD	445L-R4X1560YD	30 (1.18)	1560 (61.4)	39.6	5…30 (16.4…98.4)	4.0
445L-P4X1680YD	445L-T4X1680YD	445L-R4X1680YD	30 (1.18)	1680 (66.1)	39.6	5…30 (16.4…98.4)	4.0
445L-P4X1800YD	445L-T4X1800YD	445L-R4X1800YD	30 (1.18)	1800 (70.9)	44.9	5…30 (16.4…98.4)	5.9
445L-P4X1920YD	445L-T4X1920YD	445L-R4X1920YD	30 (1.18)	1920 (75.6)	47.6	5…30 (16.4…98.4)	6.7

(1) Can only be ordered in pairs.

Table 10 - GuardShield Safe 4 PAC (Perimeter)

Cat. No.	Transmitter	Receiver	Number of Beams	Protective Heights [mm (in.)]	Response Time [ms]	Range [m (ft.)]	Weight per Pair [kg]
445L-P4S2500YD	445L-T4S2500YD	445L-R4S2500YD	2	600 (23.6)	10.5	5 (16.4)…30 (98.4)	3.0
445L-P4S3400YD	445L-T4S3400YD	445L-R4S2500YD	3	840 (33.0)	13.2	5 (16.4)…30 (98.4)	3.9
445L-P4S4120YD	445L-T4S4120YD	445L-R4S4120YD	4	960 (37.8)	15.8	5 (16.4)…30 (98.4)	4.2
445L-103002-0048	445L-111464 (1)	445L-111463 (1)	2	600 (23.6)	10.5	0 (0)…18 (59.0)	3.0
445L-103002-0003	445L-111460 (1)	445L-111459 (1)	3	840 (33.0)	13.2	0 (0)…18 (59.0)	3.9
445L-103002-0007	445L-111452 (1)	445L-111451 (1)	4	960 (37.8)	15.8	0 (0)…18 (59.0)	4.2

(1) Can only be ordered in pairs

Catalog Number Explanation

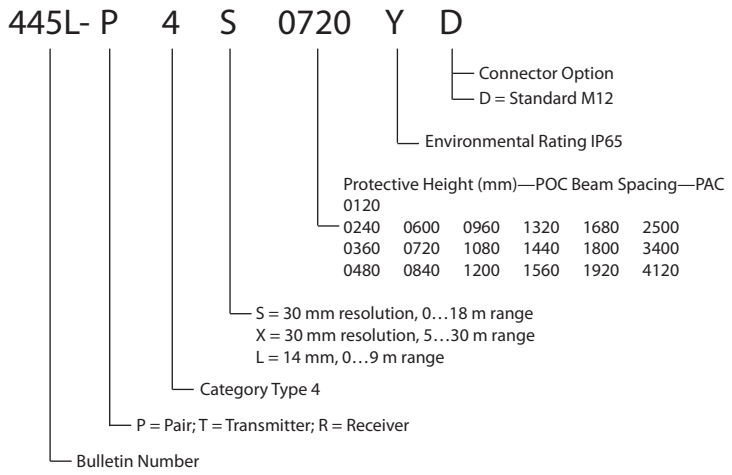

Dimensional Drawings [mm (in.)]

System with Integrated Controller

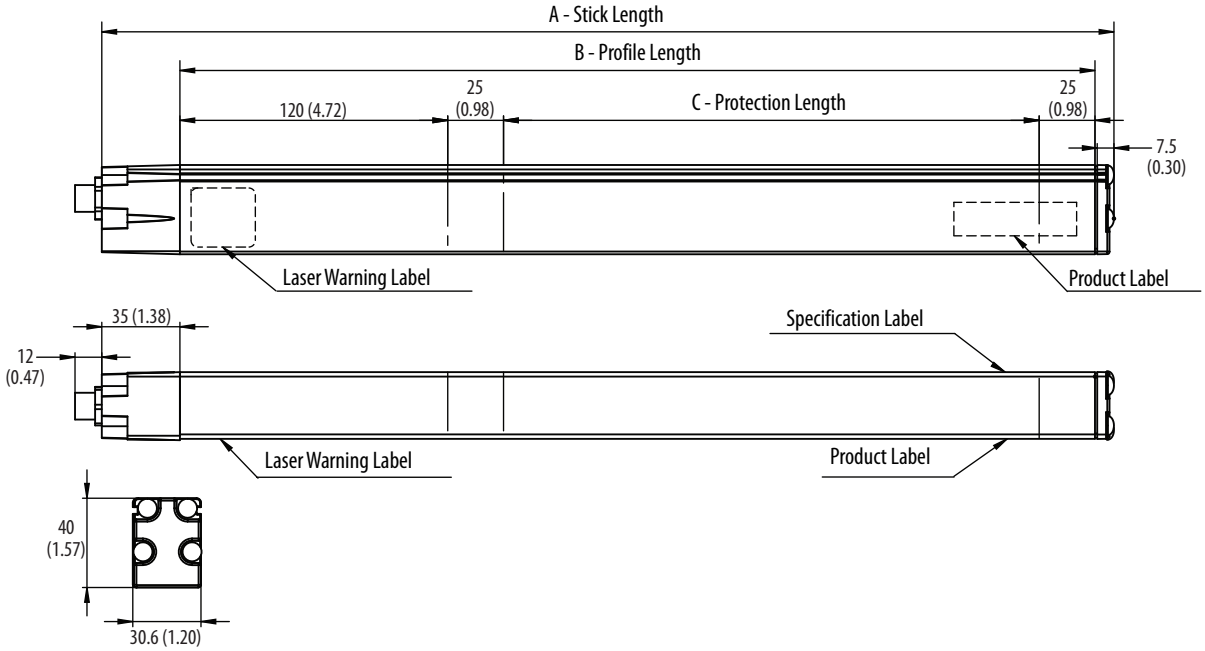

Catalog Number	A Stick Length [mm (in.)]	B Profile Length [mm (in.)]	C Protection Length [mm (in.)]
445L-P4*x*0120YD	333 (13.11)	290.5 (11.44)	120 (4.7)
445L-P4*x*0240YD	453.25 (17.84)	410.75 (16.17)	240 (9.4)
445L-P4*x*0360YD	573.5 (22.58)	531 (20.9)	360 (14.2)
445L-P4*x*0480YD	693.75 (27.31)	651.25 (25.64)	480 (18.9)
445L-P4*x*0600YD	814 (32.05)	771.5 (30.37)	600 (23.6)
445L-P4*x*0720YD	934.25 (36.78)	891.75 (35.11)	720 (28.3)
445L-P4*x*0840YD	1054.5 (41.51)	1012 (39.84)	840 (33.1)
445L-P4*x*0960YD	1174.75 (46.25)	1132.25 (44.58)	960 (37.8)
445L-P4*x*1080YD	1295 (50.98)	1252.5 (49.31)	1080 (42.5)
445L-P4*x*1200YD	1415.25 (55.72)	1372.75 (54.04)	1200 (47.2)
445L-P4*x*1320YD	1535.5 (60.45)	1493 (58.78)	1320 (52)
445L-P4*x*1440YD	1655.75 (65.19)	1613.25 (63.51)	1440 (56.7)
445L-P4*x*1560YD	1776 (69.92)	1733.5 (68.25)	1560 (61.4)
445L-P4*x*1680YD	1896.25 (74.65)	1853.75 (72.98)	1680 (66.1)
445L-P4*x*1800YD	2016.5 (79.39)	1974 (77.72)	1800 (70.9)
445L-P4*x*1920YD	2136.75 (84.12)	2094.25 (82.45)	1920 (75.6)
445L-P4S2500YD	814 (32.05)	771.5 (30.37)	600 (23.62)
445L-P4S3400YD	1054.5 (41.51)	1012 (39.84)	840 (33.07)
445L-P4S4120YD	1174.75 (46.25)	1132.25 (44.58)	960 (37.79)

x For 14 mm resolution, replace with an L.
For 30 mm resolution, replace with an S. (0…18 m [0…59 ft])
For 30 mm resolution, replace with an X. (5…30 m [16.4…98.4 ft])

Figure 20 - The Profile Length for Systems without ILAS Is Reduced for 2 x 25 mm [mm (in.)]

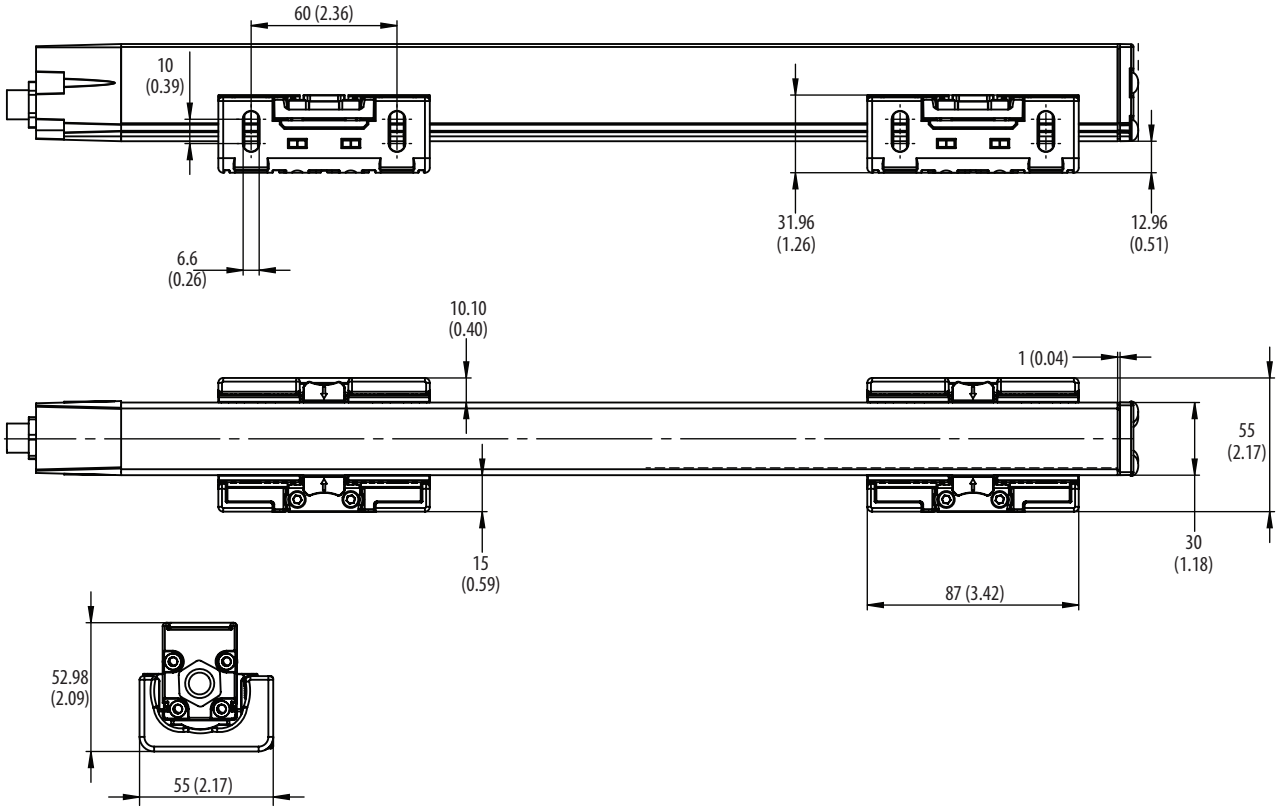

Figure 21 - GuardShield Safe 4 Profile (Rev C) with Default Mounting Kit 450L-AM-SM [mm (in.)]

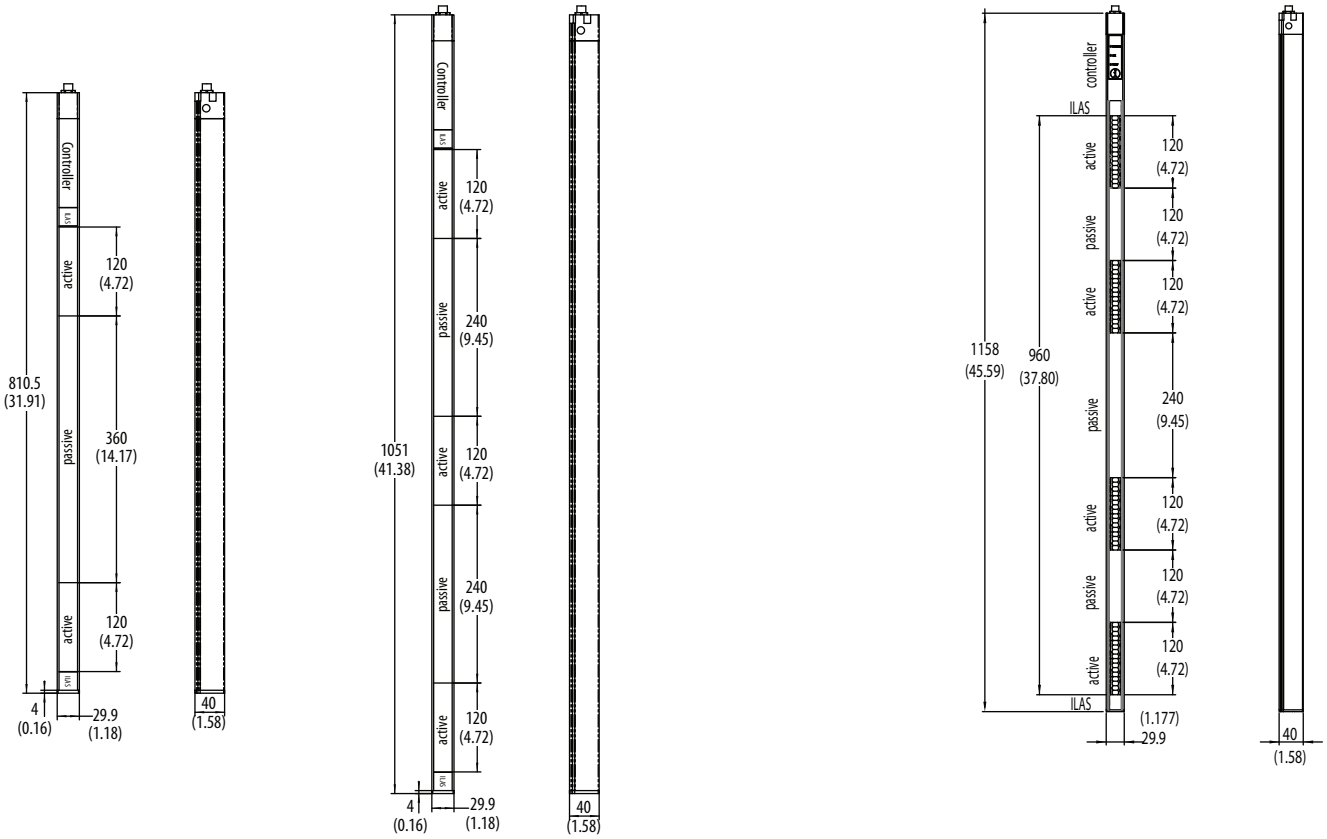

Table 11 - Transmitter and Receivers Both Use 5-pin M12 Cordsets

Female Connector (End)		Cable			Cat. No.
Face View of Female	Connector Style	Pin / Wire Color	Wire Rating	Length m (ft)	
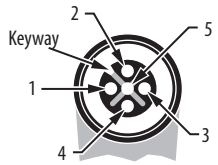	Straight Female Nonshielded	1 Brown 2 White 3 Blue 4 Black 5 Gray	22 AWG 250V 4 A	2 (6.56)	889D-F5AC-2
				5 (16.4)	889D-F5AC-5
				10 (32.8)	889D-F5AC-10
				15 (49.2)	889D-F5AC-15
				20 (65.6)	889D-F5AC-20
				30 (98.4)	889D-F5AC-30
	Straight Female Shielded	1 Brown 2 White 3 Blue 4 Black 5 Gray	22 AWG 300V 4 A	2 (6.56)	889D-F5EC-2
				5 (16.4)	889D-F5EC-5
				10 (32.8)	889D-F5EC-10
				15 (49.2)	889D-F5EC-15
				20 (65.6)	889D-F5EC-20
				30 (98.4)	889D-F5EC-30

Required Logic Interfaces

Description	Safety Outputs	Auxiliary Outputs	Terminals	Reset Type	Power Supply	Cat. No.
Single-function Safety Relays for 2 N.C. Contact Switch						
MSR127RP	3 N.O.	1 N.C.	Removable (Screw)	Monitored Manual	24V AC/DC	440R-N23135
MSR127TP	3 N.O.	1 N.C.	Removable (Screw)	Auto. / Manual	24V AC/DC	440R-N23132
MSR126	2 N.O.	None	Fixed	Auto. / Manual	24V AC/DC	440R-N23117
Modular Safety Relays						
MSR210P Base 2 N.C. only	2 N.O.	1 N.C. and 2 PNP solid-state	Removable	Auto. / Manual or Monitored Manual	24V DC from the base unit	440R-H23176
MSR220P Input Module	—	—	Removable	—	24V DC	440R-H23178
MSR310P Base	MSR300 Series Output Modules	3 PNP solid-state	Removable	Auto. / Manual / Monitored Manual	24V DC	440R-W23219
MSR320P Input Module	—	2 PNP solid-state	Removable	—	24V DC from the base unit	440R-W23218
Muting Modules						
MSR22LM	2 N.O.	1 N.C.	Removable	Auto. / Manual	24V DC	440R-P23071
MSR42 (also requires optical Interface 445L-AF6150 for GuardShield Safe 4 configurations)	2PNP	2 PNP, configurable	Removable	Auto. / Manual or manual monitored	24V DC	440R-P226AGS-NNR

Optional Accessories

Description		Cat. No.
	Side mounting kit (two kits required per pair)	450L-AM-SM
	Side mounting kit (two kits required per pair)	445L-AF6140
	180° Adjustable kit (two kits required per pair)	445L-AF6141
	Shock Mount Kit (two kits required per pair of light curtains)	445L-AF6142
	Vertical mounting kit (two kits required per pair)	445L-AF6144

Mirror 440L-AM075 [mm (in.)]

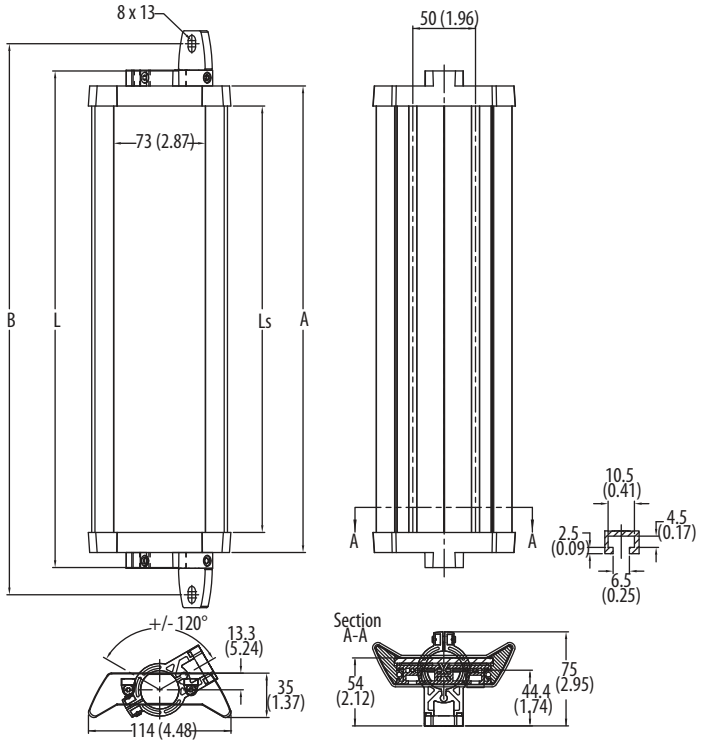

Cat. No.	Series	Description	L	L_S	A	B
440L-AM0750300	A	Mirror, 300 mm, 4 m	396	340	372	440
440L-AM0750450	A	Mirror, 450 mm, 4 m	546	490	522	590
440L-AM0750600	A	Mirror, 600 mm, 4 m	696	640	672	740
440L-AM0750750	A	Mirror, 750 mm, 4 m	846	790	822	890
440L-AM0750900	A	Mirror, 900 mm, 4 m	996	940	972	1040
440L-AM0751050	A	Mirror, 1050 mm, 4 m	1146	1090	1122	1190
440L-AM0751200	A	Mirror, 1200 mm, 4 m	1296	1240	1272	1340
440L-AM0751350	A	Mirror, 1350 mm, 4 m	1446	1390	1422	1490
440L-AM0751500	A	Mirror, 1500 mm, 4 m	1596	1540	1572	1640
440L-AM0751650	A	Mirror, 1650 mm, 4 m	1746	1690	1722	1790
440L-AM0751800	A	Mirror, 1800 mm, 4 m	1896	1840	1872	1940

Mirror 440L-AM125 [mm (in.)]

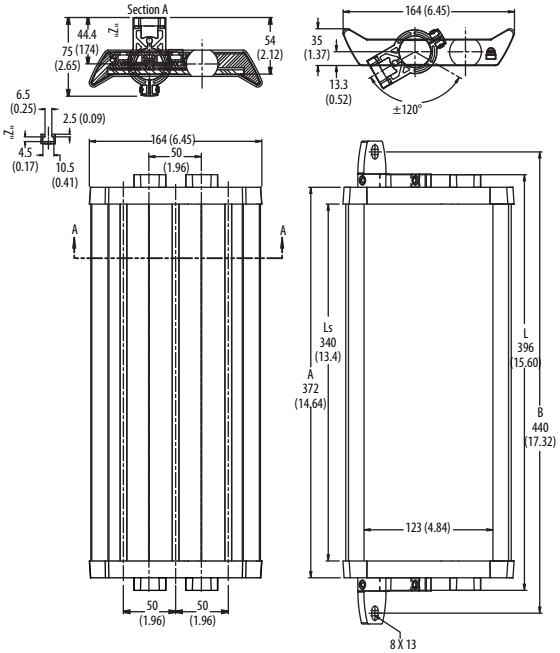

Model No.	Series	Description	L	L_S	A	B
440L-AM1250300	A	Mirror, 300 mm, 15 m	396	340	372	440
440L-AM1250450	A	Mirror, 450 mm, 15 m	546	490	522	590
440L-AM1250600	A	Mirror, 600 mm, 15 m	696	640	672	740
440L-AM1250750	A	Mirror, 750 mm, 15 m	846	790	822	890
440L-AM1250900	A	Mirror, 900 mm, 15 m	996	940	972	1040
440L-AM1251050	A	Mirror, 1050 mm, 15 m	1146	1090	1122	1190
440L-AM1251200	A	Mirror, 1200 mm, 15 m	1296	1240	1272	1340
440L-AM1251350	A	Mirror, 1350 mm, 15 m	1446	1390	1422	1490
440L-AM1251500	A	Mirror, 1500 mm, 15 m	1596	1540	1572	1640
440L-AM1251650	A	Mirror, 1650 mm, 15 m	1746	1690	1722	1790
440L-AM1251800	A	Mirror, 1800 mm, 15 m	1896	1840	1872	1940

Corner Mirror for Multi-sided Guarding

Specially constructed glass mirrors for two- and three-sided safeguard applications. It is not recommended to use more than two mirrors per safety light curtain pair.

TIP Each mirror reduces maximum scan range by 15% per mirror. Each corner mirror that is supplied with two end-cap mounting brackets.

GuardShield Safe 4 Light Protected Height [mm (in.)]	Narrow Mirror Short-range 0…4 m	Mirror Height [mm (in.)]	Cat. No.	Wide Mirror Long-range 4…15 m	Mirror Height [mm (in.)]	Cat. No.
120/240 (4.7/9.4)		300 (11.8)	440L-AM0750300		300 (11.8)	440L-AM1250300
360 (14.2)		450 (17.7)	440L-AM0750450		450 (17.7)	440L-AM1250450
480 (19)		600 (23.6)	440L-AM0750600		600 (23.6)	440L-AM1250600
600 (24)		750 (29.5)	440L-AM0750750		750 (29.5)	440L-AM1250750
720/840 (28/33)		900 (35.4)	440L-AM0750900		900 (35.4)	440L-AM1250900
960 (38)		1050 (41.3)	440L-AM0751050		1050 (41.3)	440L-AM1251050
1080 (43)		1200 (47.2)	440L-AM0751200		1200 (47.2)	440L-AM1251200
1200 (47)		1350 (53.1)	440L-AM0751350		1350 (53.1)	440L-AM1251350
1320/1440 (52/57)		1500 (59.1)	440L-AM0751500		1500 (59.1)	440L-AM1251500
1560 (61)		1650 (65)	440L-AM0751650		1650 (65)	440L-AM1251650
1680 (66)		1800 (70.9)	440L-AM0751800		1800 (70.9)	440L-AM1251800
1800/1920		None Available			None Available	

Mounting Stand

440L-AMSTD

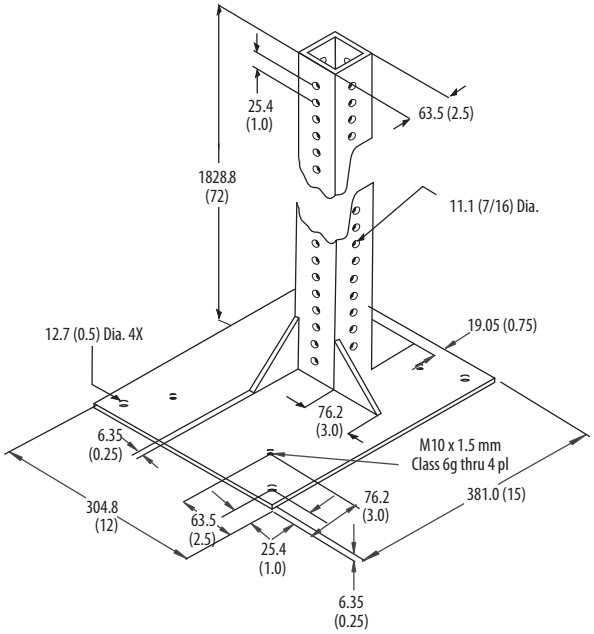

445L-AMSTD2M

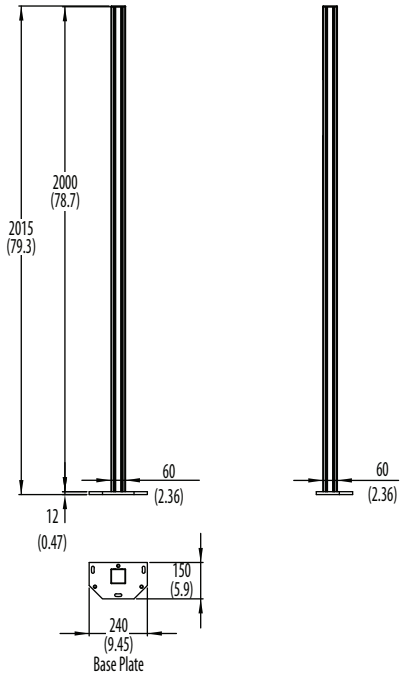

GuardShield Safe 4 Specials

Safety Light Curtain Systems

Introduction 59
Systems without an Integrated Laser Alignment System (ILAS) . . . 60
Systems with Connector Cap. 61
Cascaded Systems 61
Systems with Separated Controller. 63
Dimensional Drawings 64
Cascaded Systems 64
Special Systems. 65
Part List Safe 4 Specials 66

Introduction

This appendix shows the GuardShield™ Safe 4 safety light curtain and some special systems, for example:

- GuardShield Safe 4 safety light curtain without laser alignment system (ILAS)
- Systems with a hard-wired connection end cap
- Cascaded systems
- Systems with separated controller
- Other special systems

It is possible that some of the GuardShield Safe 4 special systems described here have been discontinued and are not available for sale. This chapter provides the relevant technical replacement data for those products.

Systems without an Integrated Laser Alignment System (ILAS)

The systems that are mentioned in Table 12 are not equipped with an integrated laser alignment (ILAS) system. So the profile length is reduced by 25 mm (0.98 in.) on each side of the protective field (see Figure 11 on page 30).

Table 12 - GuardShield Safe 4 Systems without Laser Alignment

Sensor Pair	Resolution [mm (in.)]	Protective Heights [mm (in.)]	Maximum Distance [m (ft.)]
445L-103000-0189	14 (0.55)	120 (4.7)	9 (29.5)
445L-103000-0044	14 (0.55)	240 (9.5)	9 (29.5)
445L-103000-0076	14 (0.55)	360 (14.2)	9 (29.5)
445L-103000-0130	14 (0.55)	480 (18.9)	9 (29.5)
445L-103000-0036	14 (0.55)	600 (23.6)	9 (29.5)
445L-103000-0157	14 (0.55)	720 (28.4)	9 (29.5)
445L-103000-0153	14 (0.55)	840 (33.1)	9 (29.5)
445L-103000-0140	14 (0.55)	960 (37.8)	9 (29.5)
445L-103000-0136	14 (0.55)	1080 (42.5)	9 (29.5)
445L-103000-0195	14 (0.55)	1200 (47.2)	9 (29.5)
445L-103000-0196	14 (0.55)	1440 (56.7)	9 (29.5)
445L-103000-0164	14 (0.55)	1560 (61.4)	9 (29.5)
445L-103000-0034	30 (1.18)	360 (14.2)	18 (59)
445L-103000-0139	30 (1.18)	480 (18.9)	18 (59)
445L-103000-0193	30 (1.18)	840 (33.1)	18 (59)

Table 13 - Cascaded GuardShield Safe 4 Systems

Sensor Pair	Resolution [mm (in.)]	Protective Heights [mm (in.)]
445L-103001-0057	14 (0.55)	840 / 240 (33.1 / 9.5)
445L-103001-0121	14 (0.55)	600 / 120 (23.6 / 4.7)
445L-103001-0163	14 (0.55)	120 [120 + 240] (4.7 [4.7 + 9.5])

Systems with Connector Cap for Hard-wired Connection

Figure 22 - Pinout of Connector for Safe 4 Systems with Connector Cap

Transmitter Tx

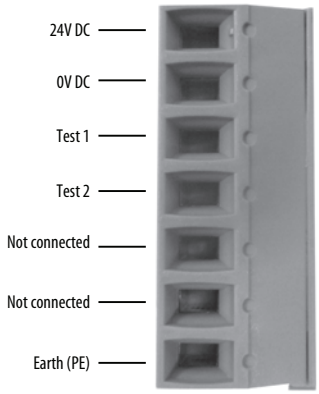

Receiver Rx

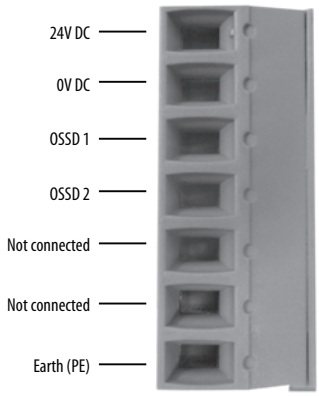

Cascaded Systems

Cascading

The GuardShield Safe 4, Type 4 POC is also available in a limited offering of cascaded segments, which allow GuardShield Safe 4 transmitters and receivers to be interconnected. This product configurability allows the GuardShield Safe 4 safety light curtain to help protect multiple sides of a machine or simply adds flexibility when positioning the GuardShield Safe 4 safety light curtain in various applications.

A maximum of three GuardShield Safe 4 safety light curtain pairs can be interconnected with a common pair of OSSDs (not to exceed 255 beams).

Two Segment Cascading GuardShield Safe 4 Systems

Typical Configuration of a Cascaded GuardShield Safe 4

Figure 23 - Cascaded GuardShield Safe 4

Figure 24 - L-shaped Two Segment GuardShield Safe 4 Cascaded Systems Offer Protection When It Is Possible to Stand between the Vertical Light Curtain and the Machine Hazard

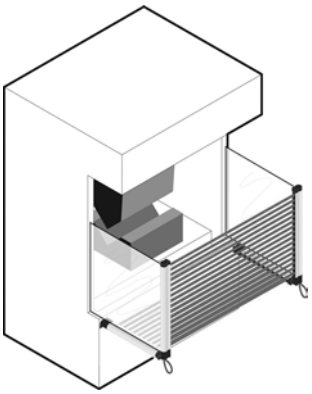

Three Segment GuardShield Safe 4 Cascading Systems

When the use of corner mirrors is not practical or possible, three-sided guarding of a machine hazard is possible using cascaded GuardShield Safe 4 light curtains.

Figure 25 - Top and Bottom Mounting of 3 GuardShield Safe 4 Segments Is Possible, Which Provides 3-sided Machine Guarding without the Use of Corner Mirrors

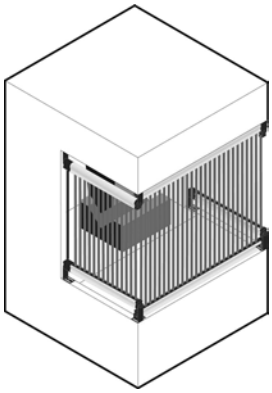

Limitations to considered:

- The protective zone is made of units with 120 mm (4.72 in.) length
- Ten meter maximum total length for light curtains, extension modules, and connection cables combined
- Maximum of three ILAS can be operated simultaneously

Only the following extension cable can be used between the light curtains

It is possible to extend the length of the cable between cascaded segment pairs, however, it is necessary to use three patchcords. The standard connection between these special Safe 4 light curtains is a DIN 9 connector. To increase the cable length between cascaded segment pairs, a DIN 9 to M12 patchcord is required to connect to the Safe 4 pigtail then an M12 to M12 patchcord connects to the first patchcord. Finally a second M12 to DIN 9 patchcord is required to make the final connection.

Dimensions [mm (in.)]	Catalog Number	Description
	445L-AC8CPx	Patchcord, 8 Pin, 1 Meter, M12 to M12 (x = 1 m, 3 m, or 5 m)
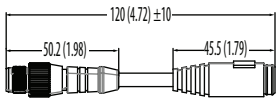	445L-ACDN9M12	Patchcord, 8-pin, Din9/female to M12/male
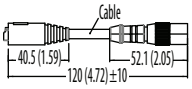	445L-109296	Patchcord, 8-pin, Din9/male to M12/female

Systems with Separated Controller

Systems with separated controllers are cascaded systems in which one cascade is without any optical modules. The dead zone of the protective cascade is minimized this way. The profile length of light curtains without laser alignment system is 2 x 25 mm (0.98 in.) shorter.

Figure 26 - GuardShield Safe 4 Safety Light Curtain with Separate Controller

Cascaded Systems

Figure 27 - Cascaded Safe 4 System (Not to Scale)

For lengths A, B, C, and D, see Safe 4 Specials Catalog Numbers on page 66.

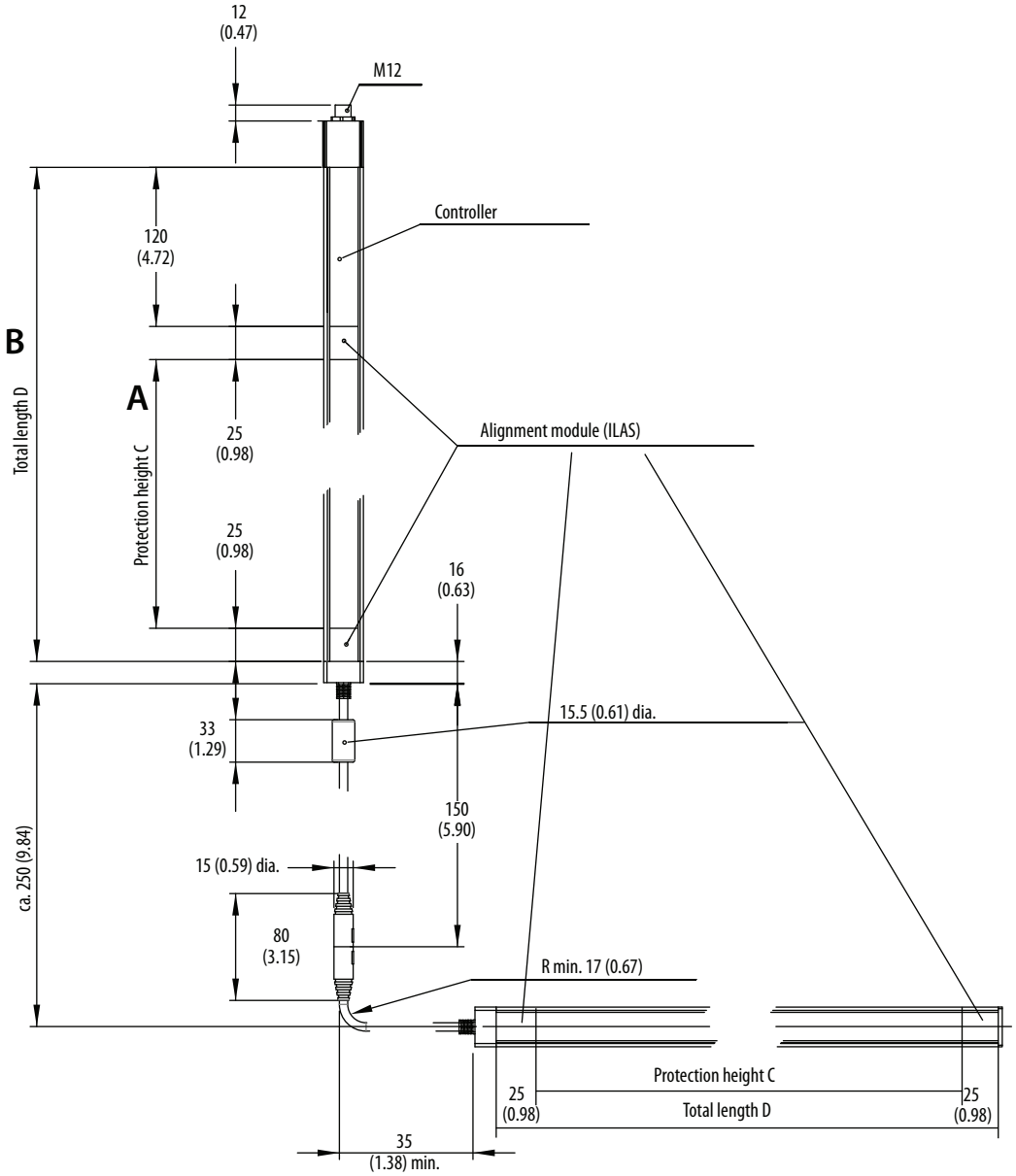

Special Systems

Two examples: Part 445L-103005-1002 has six active fields with resolution 30 mm (1.18 in.), separated with passive zones. This light curtain is designed for a customer-specific machine application.

Figure 28 - GuardShield Safe 4 Safety Light Curtain with Passive Zones (445L-103005-0036)

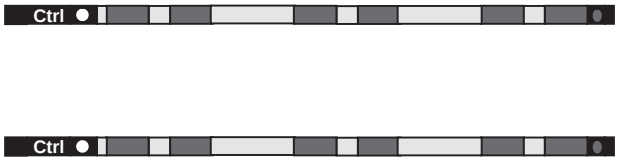

Figure 29 - GuardShield Safe 4 Safety Light Curtain with Passive Zones (445L-103005-1002)

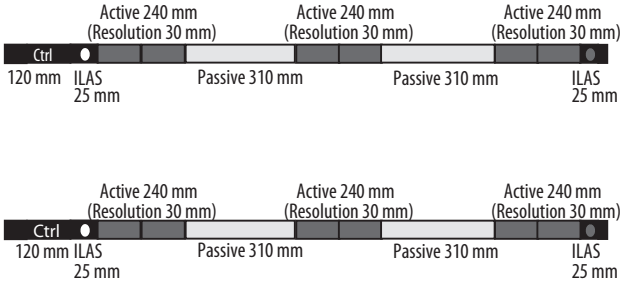

See Technical Specifications on page 46.

Safe 4 Specials Catalog Numbers

Cat. No.	Protective Height A [mm]	Total Length B [mm]	Protective Height C [mm]	Total Length D [mm]	Response Time t_R [ms]	Max Range [m]	Resolution [mm]	Weight per Pair [kg]	ILAS	Cascaded (Separate Controller)	Comments
Safe 4 without ILAS 14 mm - 9 m Pair											
445L-103000-0189	120	240	—	—	10.5	9	14	2.0	Without	No	
445L-103000-0044	240	360	—	—	15.8	9	14	2.2	Without	No	
445L-103000-0076	360	480	—	—	21.1	9	14	2.6	Without	No	
445L-103000-0130	480	600	—	—	26.3	9	14	2.9	Without	No	
445L-103000-0036	600	720	—	—	31.6	9	14	3.4	Without	No	
445L-103000-0157	720	840	—	—	36.9	9	14	3.9	Without	No	
445L-103000-0153	840	960	—	—	42.2	9	14	4.5	Without	No	
445L-103000-0140	960	1080	—	—	47.5	9	14	4.9	Without	No	
445L-103000-0136	1080	1200	—	—	52.8	9	14	5.3	Without	No	
445L-103000-0195	1200	1320	—	—	58.1	9	14	5.6	Without	No	
445L-103000-0099	1320	1440	—	—	63.4	9	14	5.9	Without	No	
445L-103000-0196	1440	1560	—	—	68.7	9	14	6.3	Without	No	
445L-103000-0164	1560	1680	—	—	74.0	9	14	7.0	Without	No	
Safe 4 without ILA 30 mm…18 m Pair											
445L-103000-0034	360	480	—	—	13.1	18	30	2.6	Without	No	
445L-103000-0139	480	600	—	—	15.8	18	30	3.0	Without	No	
445L-103000-0193	840	960	—	—	23.7	18	30	4.4	Without	No	
445L-103000-0118	1800	1920	—	—	44.9	18	30	7.3	Without	No	
Safe 4 with Separate Controller (Not for New Application)											
445L-103001-1024	0	120	120	170	10.5	9	14	2.8	With	Y	
445L-103001-0038	0	120	240	290	15.8	9	14	3.3	With	Y	
445L-103001-0033	0	120	360	410	21.1	9	14	3.1	With	Y	
445L-103001-0009	0	120	480	530	26.3	9	14	3.6	With	Y	
445L-103001-0002	0	120	840	890	42.2	9	14	5.4	With	Y	
445L-103001-0012	0	120	1080	1130	52.8	9	14	6.2	With	Y	
445L-103001-0228	0	120	1680	1730	79.3	9	14	7.1	With	Y	
445L-103001-0229	0	120	1920	1970	89.9	9	14	8.1	With	Y	
445L-103001-0118	0	120	120	120	10.5	9	14	2.7	Without	Y	
445L-103001-0105	0	120	240	240	15.8	9	14	3.2	Without	Y	
445L-103001-0122	0	120	360	360	21.1	9	14	3.6	Without	Y	
445L-103001-0117	0	120	480	480	26.3	9	14	4.0	Without	Y	
445L-103001-0014	0	120	600	600	31.6	9	14	4.4	Without	Y	
445L-103001-0035	0	120	720	720	36.9	9	14	4.8	Without	Y	
445L-103001-1020	0	120	840	840	42.2	9	14	5.3	Without	Y	
445L-103001-0112	0	120	960	960	47.5	9	14	5.7	Without	Y	
445L-103001-1021	0	120	1440	1440	68.7	9	14	7.3	Without	Y	

Cat. No.	Protective Height A [mm]	Total Length B [mm]	Protective Height C [mm]	Total Length D [mm]	Response Time t_R [ms]	Max Range [m]	Resolution [mm]	Weight per Pair [kg]	ILAS	Cascaded (Separate Controller)	Comments
Safe 4 with Separate Controller (Not for New Application)											
445L-103001-1023	0	120	120	120	10.5	9	14	3.0	Without	Y	
445L-103001-1025	0	120	240	290	10.5	18	30	3.1	With	Y	
445L-103001-1026	0	120	480	530	15.8	18	30	4.1	With	Y	
445L-103001-0017	0	120	1080	1130	29.1	18	30	6.5	With	Y	
445L-103001-0094	0	120	1440	1490	36.9	18	30	7.9	With	Y	
445L-103001-1022	0	120	120	120	7.8	18	30	2.7	Without	Y	
Safe 4 Special Pair											
445L-103001-0199	1560	1730	1320	1370	68.7	18	30	12.7	With	No	
445L-103001-0023	720	890	240	290	47.6	6	14	5.4	With	No	90° fixed angle
445L-103005-1002	1340	1510	—	—	21.1	18	340	5.6	With	No	
445L-103001-0046	240	290	720	770	47.6	6	14	5.4	With	Y	90° fixed angle
445L-103001-0057	840	1010	240	290	52.9	6	14	5.8	With	No	90° fixed angle
445L-103002-0013	840	1010	—	—	13.2	18	300	8.5	With	No	coated window
445L-103000-0068	1560	1730	—	—	74.0	9	14	9.1	With	No	coated window
445L-103002-0025	1680	1800	—	—	29.1	18	180	2.4	Without	No	
445L-103001-0121	600	600	120	120	37	6	14	6.2	Without	Y	90° fixed angle
445L-103000-0144	960	1130	—	—	26.3	30	30	4.6	With	No	coated window
445L-103005-0036	1380	1550	—	—	21.1	18	300	3.3	With	No	
445L-103001-0191	720	890	120	170	42.3	6	14	5.0	With	No	T-connector & 125º fixed angle
445L-103001-0200	240	360	240	240	26.3	6	14	3.5	Without	No	90° fixed angle
445L-103001-0068	1200	1370	960	1010	79.3	9	14/30	9.3	With	No	
445L-103001-0077	240	240	240	240	26.3	9	14	4.1	Without	Y	
445L-103001-0114	840	1010	240	290	52.8	9	14	5.6	With	No	
445L-103001-0125	960	1130	240	290	52.9	9	14/30	4.7	With	No	
445L-103001-0218	720	890	240	290	26.3	18	30	5.6	With	No	
445L-103001-0219	720	890	360	410	29.1	9	30	6.1	With	No	
445L-103001-0225	1080	1250	120	170	31.6	18	30	6.3	With	No	
445L-103005-0053	600	770	—	—	15.8	18	150	4.6	With	No	
445L-103001-0222	240	410	840	890	291	30	30	6.0	With	No	

Notes:

Certification and Compliance

Certification

See the Product Certification link at rok.auto/certifications for Declaration of Conformity,

Certificates, and other certification details.

- cULus Listed Industrial Control Equipment, which is certified for US and Canada
- CE Marked for all applicable directives (see Compliance to European Union Directives on page 69)
- RCM marked (Australia)
- TÜV Rheinland Certified for Functional Safety up to SIL 3 Category 4for use in safety applications up to and including SIL 3, in accordance with IEC 61508 and EN 62061, Performance Level e and Category 4 in accordance with ISO 13849-1, ESPE type 4 safety light curtain according to EN IEC 61496.

Compliance to European Union Directives

Rockwell Automation® B.V. (address: Rivium Promenade 160, 2909 LM Capelle aan den Ijssel, The Netherlands) declares that this product is in conformity with the provisions of the following EC directives (including all applicable amendments):

- 2014/30/EU EMC Directive (EMC)
- 2006/42/EC Machinery Directive (MD)

And that the respective standards and/or technical specifications have been applied. It is approved for installation within the European Union and EEA regions. All relevant directives and standards are listed in the declaration of conformity, which is available on www.ab.com
(Document: SEN-0392-C-EN).

Notes:

Rockwell Automation Support

Use these resources to access support information.

Technical Support Center	Find help with how-to videos, FAQs, chat, user forums, and product notification updates.	rok.auto/support
Knowledgebase	Access Knowledgebase articles	rok.auto/knowledgebase
Local Technical Support Phone Numbers	Locate the telephone number for your country.	rok.auto/phonesupport
Literature Library	Find installation instructions, manuals, brochures, and technical data publications.	rok.auto/literature
Product Compatibility and Download Center (PCDC)	Get help determining how products interact, check features and capabilities, and find associated firmware.	rok.auto/pcdc

Documentation Feedback

Your comments help us serve your documentation needs better. If you have any suggestions on how to improve our content, complete the form at rok.auto/docfeedback.

Waste Electrical and Electronic Equipment (WEEE)

At the end of life, this equipment should be collected separately from any unsorted municipal waste.

Rockwell Automation maintains current product environmental information on its website at rok.auto/pec.

Allen-Bradley, Guardmaster, GuardShield, Rockwell Automation, and Rockwell Software are trademarks of Rockwell Automation, Inc.

Trademarks not belonging to Rockwell Automation are property of their respective companies.

Rockwell Otomasyon Ticaret A.Ş., Kar Plaza İş Merkezi E Blok Kat:6 34752 İçerenköy, İstanbul, Tel: +90 (216) 5698400

www.rockwellautomation.com

Power, Control and Information Solutions Headquarters

Americas: Rockwell Automation, 1201 South Second Street, Milwaukee, WI 53204-2496 USA, Tel: (1) 414.382.2000, Fax: (1) 414.382.4444
Europe/Middle East/Africa: Rockwell Automation NV, Pegasus Park, De Kleetlaan 12a, 1831 Diegem, Belgium, Tel: (32) 2 663 0600, Fax: (32) 2 663 0640
Asia Pacific: Rockwell Automation, Level 14, Core F, Cyberport 3, 100 Cyberport Road, Hong Kong, Tel: (852) 2887 4788, Fax: (852) 2508 1846

Publication 445L-UM001D-EN-P - January 2020

Supersedes Publication 445L-UM001C-EN-P - March 2017

PN-107933

10000167491 Ver 02 - CSA: 108962

Copyright © 2020 Rockwell Automation, Inc. All rights reserved. Printed in the U.S.A.