Guardmaster®

MINOTAUR MSR9T

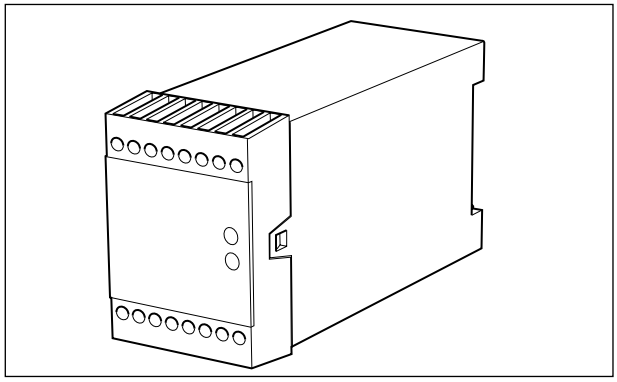

INSTALLATION INSTRUCTIONS / MONTAGEANLEITUNG / NOTICE D'INSTALLATION

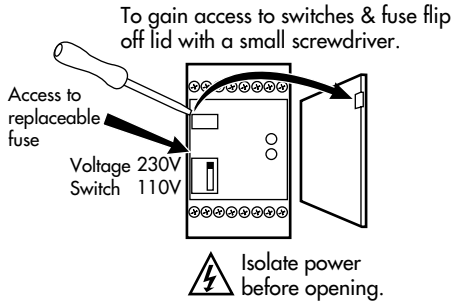

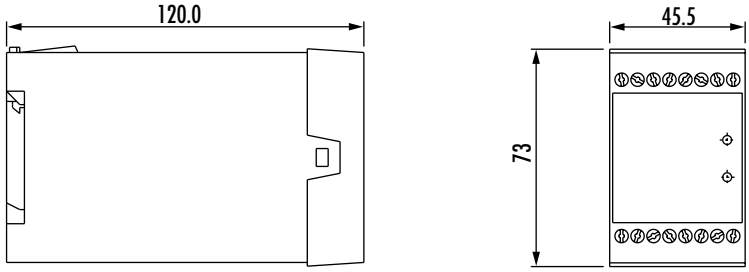

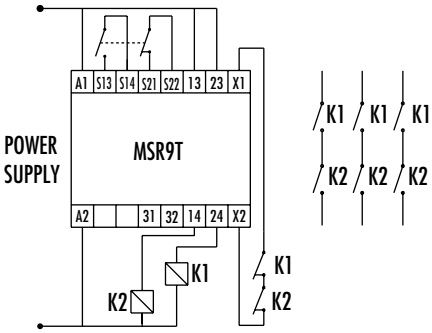

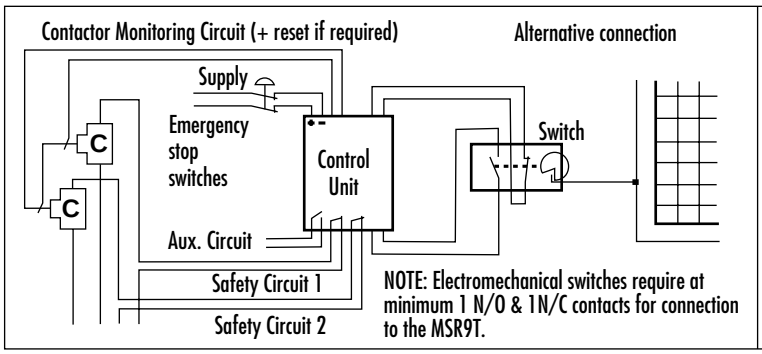

Installation using the Minotaur MSR9T in conjunction with emergency stop and electromechanical gate/guard interlock switch.

(Shown with guard closed and machine able to be started)

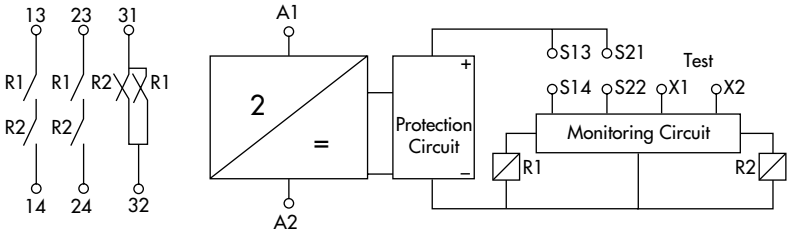

Technical Specifications

Power Supply:	24V AC/DC or 110/230 VAC selectable.
Power Consumption:	6VA.
Safety Inputs:	1N/O & 1N/C.
Safety Outputs:	2N/O & 1N/C.
Max. Switch, Voltage/Current/Load:	250VAC/4A/1000VA Resistive 30VDC/2A/60VA Resistive.
Drop Out Time:	60mS.
Internal Fuse:	500mA T (Replacable).
L.E.D Indication:	Red = Power On Green = Output Relays Closed.
Ambient Temperature:	-10°C to +55°C.
Mounting:	35mm Din Rail.
Enclosure Protection:	Housing IP40, Terminals IP20.
Housing:	16 Way, D=120mm, H=73mm, W=45mm.
Standard Conformity:	EN 60204 - 1, EN 1088.

Technische Daten

Entspricht den Normen:	EN 60204-1, EN 1088.
Gehäuse:	16 Anschlüsse, T = 120mm, H = 73mm, B = 45mm.
Montage:	Schnellbefestigung auf DIN-Normschiene.
Schutzart:	Gehäuse IP 40, Anschlüsse IP 20.
LED-Anzeige:	Rot = Betriebsspannung Grün = Ausgangsrelais.
Betriebsspannung:	24 VAC/DC oder 110/230 VAC (umschaltbar).
Leistungsverbrauch:	<2 VA.
Eingänge:	1 Ö und 1 S.
Freigabeausgänge:	Relais 2 S + 1 Ö.
Schaltleistung:	4 A /250 VAC / 1000 VA ohmsch
Sicherung:	2 A /30 VDC / 60 W ohmsch.
Abfallzeit:	60 ms.
Umgebungstemperatur:	-10°C bis +55°C.

Specifications Techniques

Alimentation:	24V AC/DC ou 110/230 VAC Sélection VAC.
Consommation:	6 VA.
Canal de sécurité:	1 N/O & 1 N/C.
Sortie de sécurité:	2 N/O & 1 N/C.
Pouvoir de coupure, Tension/Courant/Charge:	250 VAC / 4A /1000 VA Résistant. 30 VDC / 2A / 60 VA Résistant.
Temps de scrutation:	60 ms.
Fusible interne:	500 MA T (Remplaçable).
Indication par LED:	Rouge = ON Vert = Relais de sortie connectés.
Température d'amblance:	de - 10°C à 55°C.
Montage:	Rail Din 35mm.
Etanchéite et résistance:	Boltier: IP 40 Terminaux: IP 20.
Boltier:	16 voies, D = 120mm, H = 73mm W = 45mm.
Conformité aux normes:	EN 60204-1, EN 292.

Allen-Bradley

Guardmaster®

Drawing No. 23879
Issue No. 0