Allen-Bradley

Installation Instructions

Analog Output Module

Catalog Number 1762-OF4

Table of Contents

Topic	Page
Important User Information	2
North American Hazardous Location Approval	4
Additional Resources	5
Overview	6
Module Description	7
Mount the Module	8
Field Wiring Connections	11
Grounding the Module	11
Output Type Selection	11
Wiring the Finger-Safe Terminal Block	13
Specifications	18

Allen-Bradley • Rockwell Software

Rockwell Automation

Important User Information

Solid state equipment has operational characteristics differing from those of electromechanical equipment. Safety Guidelines for the Application, Installation and Maintenance of Solid State Controls (Publication SGI-1.1 available from your local Rockwell Automation sales office or online at http://literature.rockwellautomation.com) describes some important differences between solid state equipment and hard-wired electromechanical devices. Because of this difference, and also because of the wide variety of uses for solid state equipment, all persons responsible for applying this equipment must satisfy themselves that each intended application of this equipment is acceptable.

In no event will Rockwell Automation, Inc. be responsible or liable for indirect or consequential damages resulting from the use or application of this equipment.

The examples and diagrams in this manual are included solely for illustrative purposes. Because of the many variables and requirements associated with any particular installation, Rockwell Automation, Inc. cannot assume responsibility or liability for actual use based on the examples and diagrams.

No patent liability is assumed by Rockwell Automation, Inc. with respect to use of information, circuits, equipment, or software described in this manual.

Reproduction of the contents of this manual, in whole or in part, without written permission of Rockwell Automation, Inc., is prohibited.

Throughout this manual, when necessary, we use notes to make you aware of safety considerations.

WARNING	Identifies information about practices or circumstances that can cause an explosion in a hazardous environment, which may lead to personal injury or death, property damage, or economic loss.
IMPORTANT	Identifies information that is critical for successful application and understanding of the product.
ATTENTION	Identifies information about practices or circumstances that can lead to personal injury or death, property damage, or economic loss. Attentions help you identify a hazard, avoid a hazard and recognize the consequences.
SHOCK HAZARD	Labels may be on or inside the equipment (for example, drive or motor) to alert people that dangerous voltage may be present.
BURN HAZARD	Labels may be on or inside the equipment (for example, drive or motor) to alert people that surfaces may reach dangerous temperatures.

Environment and Enclosure

ATTENTION

This equipment is intended for use in a Pollution Degree 2 industrial environment, in overvoltage Category II applications (as defined in IEC 60664-1), at altitudes up to 2000 m (6562 ft) without derating.This equipment is considered Group 1, Class A industrial equipment according to IEC/CISPR 11. Without appropriate precautions, there may be difficulties with electromagnetic compatibility in residential and other environments due to conducted and radiated disturbances.

This equipment is supplied as open-type equipment. It must be mounted within an enclosure that is suitably designed for those specific environmental conditions that will be present and appropriately designed to prevent personal injury resulting from accessibility to live parts. The enclosure must have suitable flame-retardant properties to prevent or minimize the spread of flame, complying with a flame spread rating of 5VA, V2, V1, V0 (or equivalent) if non-metallic. The interior of the enclosure must be accessible only by the use of a tool. Subsequent sections of this publication may contain additional information regarding specific enclosure type ratings that are required to comply with certain product safety certifications.

In addition to this publication, see:

- Industrial Automation Wiring and Grounding Guidelines, for additional installation requirements, Allen-Bradley publication 1770-4.1.
- NEMA Standards 250 and IEC 60529, as applicable, for explanations of the degrees of protection provided by different types of enclosure.

Preventing Electrostatic Discharge

ATTENTION

This equipment is sensitive to electrostatic discharge, which can cause internal damage and affect normal operation. Follow these guidelines when you handle this equipment:

- Touch a grounded object to discharge potential static.
- Wear an approved grounding wriststrap.
- Do not touch connectors or pins on component boards.
- Do not touch circuit components inside the equipment.
- Use a static-safe workstation, if available.
- Store the equipment in appropriate static-safe packaging when not in use.

North American Hazardous Location Approval

The following modules are North American Hazardous Location approved: 1762-OF4

The following information applies when operating this equipment in hazardous locations:	**Informations sur l'utilisation de cet équipement en environnements dangereux:**
Products marked "CL I, DIV 2, GP A, B, C, D" are suitable for use in Class I Division 2 Groups A, B, C, D, Hazardous Locations and nonhazardous locations only. Each product is supplied with markings on the rating nameplate indicating the hazardous location temperature code. When combining products within a system, the most adverse temperature code (lowest "T" number) may be used to help determine the overall temperature code of the system. Combinations of equipment in your system are subject to investigation by the local Authority Having Jurisdiction at the time of installation.	Les produits marqués "CL I, DIV 2, GP A, B, C, D" ne conviennent qu'à une utilisation en environnements de Classe I Division 2 Groupes A, B, C, D dangereux et non dangereux. Chaque produit est livré avec des marquages sur sa plaque d'identification qui indiquent le code de température pour les environnements dangereux. Lorsque plusieurs produits sont combinés dans un système, le code de température le plus défavorable (code de température le plus faible) peut être utilisé pour déterminer le code de température global du système. Les combinaisons d'équipements dans le système sont sujettes à inspection par les autorités locales qualifiées au moment de l'installation.

WARNING

EXPLOSION HAZARD

- Do not disconnect equipment unless power has been removed or the area is known to be nonhazardous.
- Do not disconnect connections to this equipment unless power has been removed or the area is known to be nonhazardous. Secure any external connections that mate to this equipment by using screws, sliding latches, threaded connectors, or other means provided with this product.
- Substitution of components may impair suitability for Class I, Division 2.
- If this product contains batteries, they must only be changed in an area known to be nonhazardous.
- All wiring must comply with N.E.C. article 501-4(b).
- The interior of the enclosure must be accessible only by the use of a tool.
- For applicable equipment (relay modules, etc.), exposure to some chemicals may degrade the sealing properties of materials used in the following devices: Relays, Epoxy. It is recommended that the User periodically inspect these devices for any degradation of properties and replace the module if degradation is found.

AVERTISSEMENT

RISQUE D'EXPLOSION

- Couper le courant ou s'assurer que l'environnement est classé non dangereux avant de débrancher l'équipement.
- Couper le courant ou s'assurer que l'environnement est classé non dangereux avant de débrancher les connecteurs. Fixer tous les connecteurs externes reliés à cet équipement à l'aide de vis, loquets coulissants, connecteurs filetés ou autres moyens fournis avec ce produit.
- La substitution de composants peut rendre cet équipement inadapté à une utilisation en environnement de Classe I, Division 2.
- S'assurer que l'environnement est classé non dangereux avant de changer les piles.

Additional Resources

Resource	Description
MicroLogix 1100 Programmable Controllers User Manual, publication 1763-UM001.	A more detailed description of how to install and use your MicroLogix 1100 programmable controller and expansion I/O system.
MicroLogix 1200 Programmable Controllers User Manual, publication 1762-UM001.	A more detailed description of how to install and use your MicroLogix 1200 programmable controller and expansion I/O system.
MicroLogix 1400 Programmable Controllers User Manual, publication 1766-UM001.	A more detailed description of how to install and use your MicroLogix 1400 programmable controller and expansion I/O system.
MicroLogix 1100 Programmable Controllers Installation Instructions, publication 1763-IN001.	Information on installing and using the MicroLogix 1100 programmable controller.
MicroLogix 1200 Programmable Controllers Installation Instructions, publication 1762-IN006.	Information on installing and using the MicroLogix 1200 programmable controller.
MicroLogix 1400 Programmable Controllers Installation Instructions, publication 1766-IN001.	Information on installing and using the MicroLogix 1400 programmable controller.
Industrial Automation Wiring and Grounding Guidelines, publication 1770-4.1.	More information on proper wiring and grounding techniques.

If you would like a manual, you can:

- download a free electronic version from the Internet: http://literature.rockwellautomation.com
- purchase a printed manual by contacting your local Allen-Bradley distributor or Rockwell Automation representative

Overview

1762 output module is suitable for use in an industrial environment when installed in accordance with these instructions. Specifically, this equipment is intended for use in clean, dry environments (Pollution degree 2[1]) and to circuits not exceeding Over Voltage Category II[2] (IEC 60664-1)[3].

Install your module using these installation instructions.

1762 Output Module

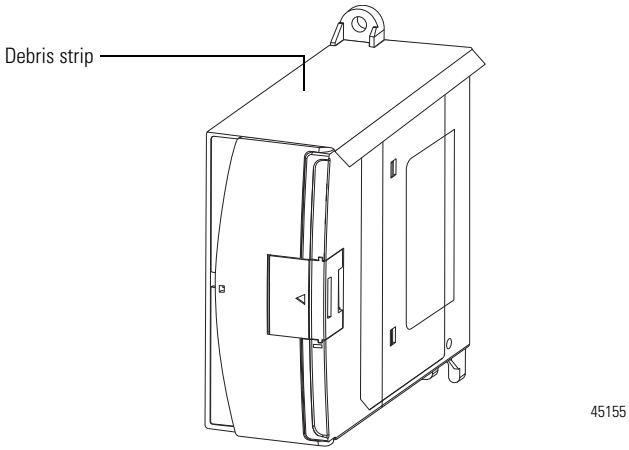

ATTENTION

Do not remove the protective debris strip until after the module and all other equipment in the panel near the module are mounted and wiring is complete. Once wiring is complete, remove protective debris strip. Failure to remove strip before operating can cause overheating.

ATTENTION

Electrostatic discharge can damage semiconductor devices inside the module. Do not touch the connector pins or other sensitive areas.

(1) Pollution Degree 2 is an environment where, normally, only non-conductive pollution occurs except that occasionally a temporary conductivity caused by condensation shall be expected.

(2) Over Voltage Category II is the load level section of the electrical distribution system. At this level transient voltages are controlled and do not exceed the impulse voltage capability of the product's insulation.

(3) Pollution Degree 2 and Over Voltage Category II are International Electrotechnical Commission (IEC) designations.

Module Description

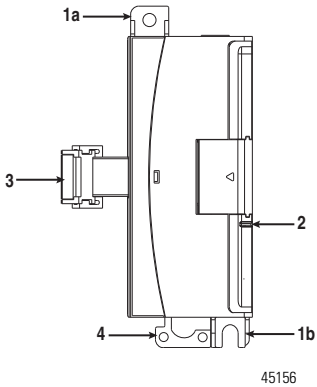

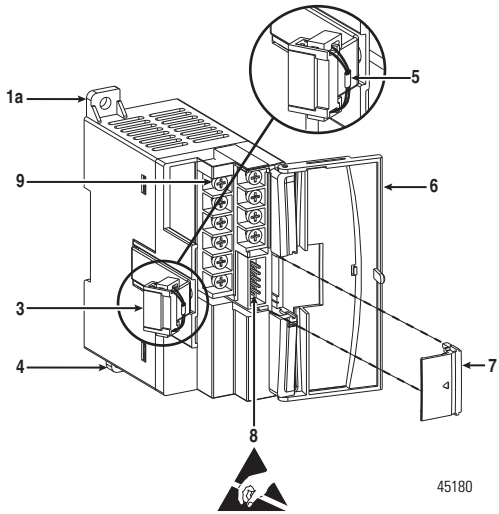

This equipment is sensitive to electrostatic discharge (ESD). Follow ESD prevention guidelines when handling this equipment.

Front view **Left side view**

	Description		Description
1a	upper panel mounting tab	5	pull loop
1b	lower panel mounting tab	6	module door with terminal identification label
2	power diagnostic LED	7	bus connector cover
3	flat ribbon cable with bus connector (female)	8	bus connector with male pins
4	DIN rail latch	9	terminal block

ATTENTION

To comply with UL restrictions, this equipment must be powered from a source compliant with Class 2 or Limited Voltage/Current.

Mount the Module

General Considerations

Most applications require installation in an industrial enclosure to reduce the effects of electrical interference and environmental exposure. Locate your controller as far as possible from power lines, load lines, and other sources of electrical noise such as hard-contact switches, relays, and AC motor drives. For more information on proper grounding guidelines, see the Industrial Automation Wiring and Grounding Guidelines, publication 1770-4.1.

ATTENTION

This product is intended to be mounted to a well-grounded mounting surface such as a metal panel. Additional grounding connections from the power supply's mounting tabs or DIN rail (if used) are not required unless the mounting surface cannot be grounded. Refer to Industrial Automation Wiring and Grounding Guidelines, Allen-Bradley publication 1770-4.1, for additional information.

Mounting Dimensions

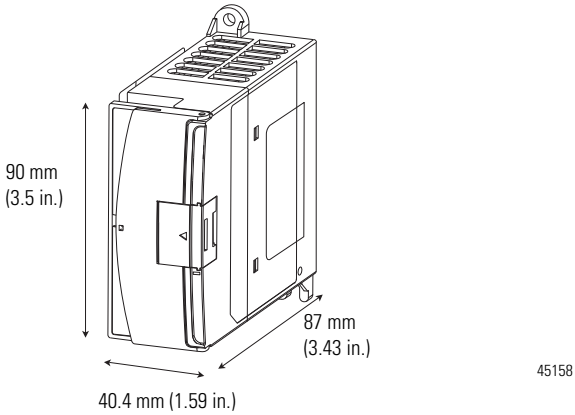

Measurements do not include mounting feet or DIN rail latches.

Module Spacing

Maintain spacing from objects such as enclosure walls, wireways and adjacent equipment. Allow 50.8 mm (2 in.) of space on all sides for adequate ventilation, as shown:

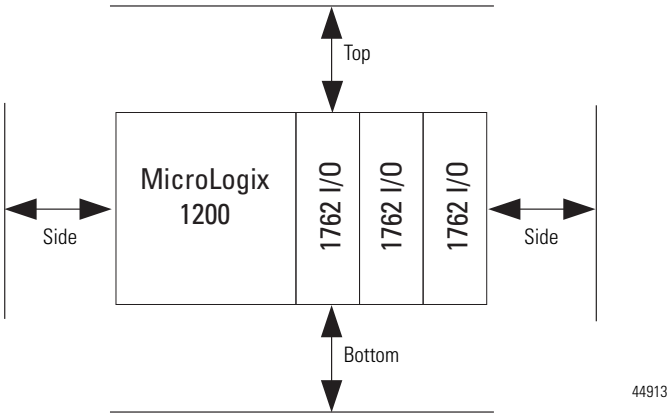

DIN Rail Mounting

The module can be mounted using the following DIN rails: 35 x 7.5 mm (EN 50 022 - 35 x 7.5) or 35 x 15 mm (EN 50 022 - 35 x 15).

Before mounting the module on a DIN rail, close the DIN rail latch. Press the DIN rail mounting area of the module against the DIN rail. The latch will momentarily open and lock into place.

Use DIN rail end anchors (Allen-Bradley part number 1492-EA35 or 1492-EAH35) for vibration or shock environments.

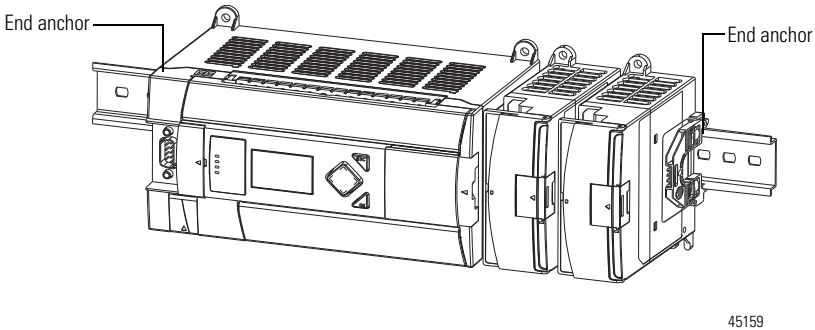

TIP For environments with greater vibration and shock concerns, use the panel mounting method described below, instead of DIN rail mounting.

Panel Mounting

Use the dimensional template shown below to mount the module. The preferred mounting method is to use two M4 (#8) panhead screws per module. M3.5 (#6) panhead screws may also be used, but a washer may be needed to ensure a good mechanical contact. Mounting screws are required on every module.

For more than 2 I/O modules: measure (number of modules - 1) x 40 mm (1.59 in.)

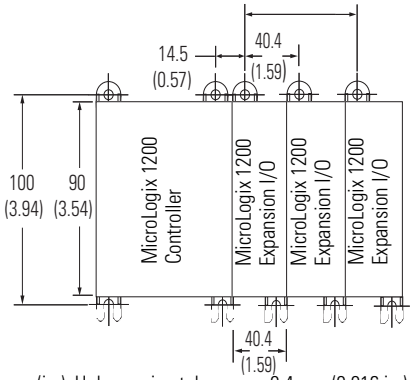

NOTE: All dimensions are in mm (in.). Hole spacing tolerance: ±0.4 mm (0.016 in.).

System Assembly

The expansion I/O module is attached to the controller or another I/O module by means of a flat ribbon cable *after* mounting as shown below.

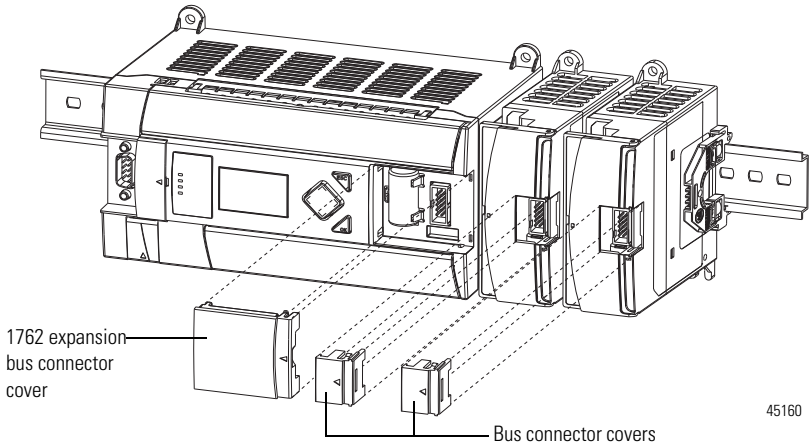

TIP Use the pull loop on the connector to disconnect modules. Do not pull on the ribbon cable.

Field Wiring Connections

Grounding the Module

In solid-state control systems, grounding and wire routing helps limit the effects of noise due to electromagnetic interference (EMI). Run the ground connection from the ground screw of the controller to the ground bus prior to connecting any devices. Use AWG #14 wire. For AC-powered controllers, this connection must be made for safety purposes.

You must also provide an acceptable grounding path for each device in your application. For more information on proper grounding guidelines, refer to the Industrial Automation Wiring and Grounding Guidelines, publication 1770-4.1.

WARNING

EXPLOSION HAZARD

- In Class I, Division 2 applications, the bus connector must be fully seated and the bus connector cover must be snapped in place.
- In Class I, Division 2 applications, all modules must be mounted in direct contact with each other as shown on page 10. If DIN rail mounting is used, an end anchor must be installed ahead of the controller and after the last 1762 I/O module.

ATTENTION

To comply with the CE Low Voltage Directive (LVD), all connected I/O must be powered from a source compliant with the Safety Extra Low Voltage (SELV) or Protected Extra Low Voltage (PELV).

Output Type Selection

The output type selection, current or voltage, is made by wiring the appropriate terminals, Iout or Vout, and by the input type/range selection bits in the Configuration Data File (see page 16).

Output Wiring

Basic wiring of input devices to the 1762-OF4 is shown below.

Terminal Block Layout

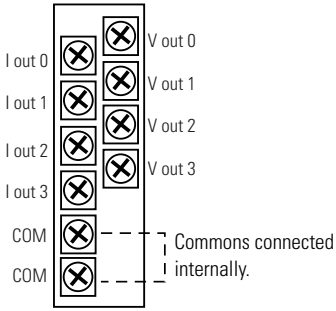

Differential Sensor Transmitter Types

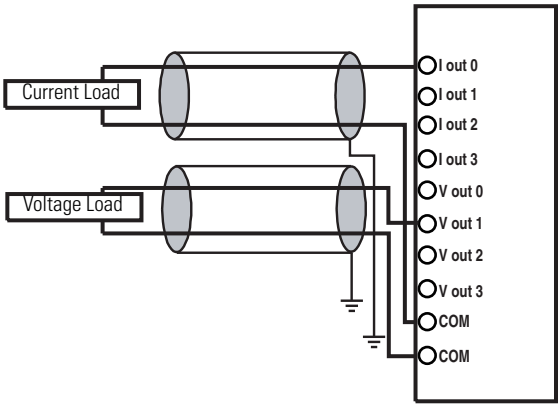

TIP Grounding the cable shield at the module end only usually provides sufficient noise immunity. However, for best cable shield performance, earth ground the shield at both ends, using a 0.01 µF capacitor at one end to block AC power ground currents, if necessary.

Ground the Module

This product is intended to be mounted to a well-grounded mounting surface such as a metal panel. Additional grounding connections from the module's mounting tabs or DIN rail (if used) are not required unless the mounting surface cannot be grounded. Refer to Industrial Automation Wiring and Grounding Guidelines, Allen-Bradley publication 1770-4.1, for additional information.

Wiring the Finger-Safe Terminal Block

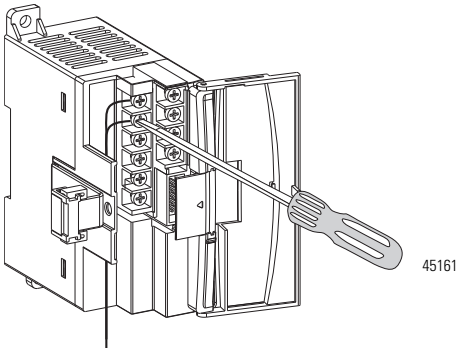

ATTENTION

Be careful when stripping wires. Wire fragments that fall into a module could cause damage when power is applied. Once wiring is complete, ensure the module is free of all metal fragments.

When wiring the terminal block, keep the finger-safe cover in place.

1. Route the wire under the terminal pressure plate. You can use the stripped end of the wire or a spade lug. The terminals will accept a 6.35 mm (0.25 in.) spade lug.
2. Tighten the terminal screw making sure the pressure plate secures the wire. Recommended torque when tightening terminal screws is 0.904 Nm (8 lb-in.).
3. After wiring is complete, remove the debris shield.

TIP

If you need to remove the finger-safe cover, insert a screw driver into one of the square wiring holes and gently pry the cover off. If you wire the terminal block with the finger-safe cover removed, you will not be able to put it back on the terminal block because the wires will be in the way.

Wire Size and Terminal Screw Torque

Each terminal accepts up to two wires with the following restrictions:

Wire Type		Wire Size	Terminal Screw Torque
Solid	Cu-90 °C (194 °F)	#14…22 AWG	0.904 Nm (8 lb-in.)
Stranded	Cu-90 °C (194 °F)	#16…22 AWG	0.904 Nm (8 lb-in.)

Labeling the Terminals

A write-on label is provided with the module. Mark the identification of each terminal with permanent ink, and slide the label back into the door.

1762 Expansion I/O Addressing

The addressing scheme for 1762 Expansion I/O is represented in the following figure.

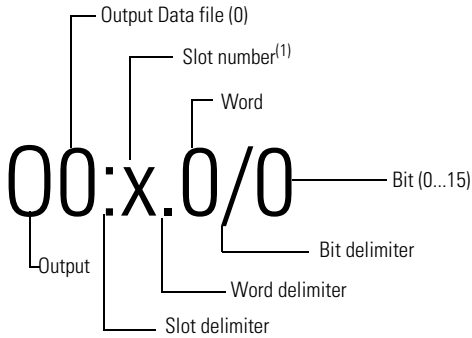

(1) I/O located on the controller (embedded I/O) is slot 0. I/O added to the controller (expansion I/O) begins with slot 1.

Input Data File

For each module, slot x, words 0 and 1 contain the analog output module status data for use in the control program.

Word	Bit Position															
	15	14	13	12	11	10	9	8	7	6	5	4	3	2	1	0
0	Reserved												SO3	SO2	SO1	SO0
1	Reserved								UO0	OO0	UO1	OO1	UO2	OO2	UO3	OO3

The bits are defined as follows:

- SOx = General status bits for output channels 0...3. This bit is set when an error (over- or under-range) exists for that channel, or there is a general module hardware error.
- OOx = Over-range flag bits for output channels 0...3. These bits indicate an input signal above the user range and can be used in the control program for error detection. The module continues to convert analog data to the maximum full range value while this bit is set (1). The bit is reset (0) when the error clears.

- UOx = Under-range flag bits for output channels 0...3. These bits indicate an input signal below the user range. They can be used in the control program for error detection. The module continues to convert analog data to the minimum full range value while this bit is set (1). The bit is reset (0) when the error clears.

Output Data File

For each module, slot x, words 0...3 contain the channel output data.

Raw/Proportional Format

Word	Bit Position															
	15	14	13	12	11	10	9	8	7	6	5	4	3	2	1	0
0	0	Channel 0 Data 0…32,760												0	0	0
1	0	Channel 1 Data 0…32,760												0	0	0
2	0	Channel 2 Data 0…32,760												0	0	0
3	0	Channel 3 Data 0…32,760												0	0	0

Words 0...3 contain the analog output data for channels 0...3, respectively. The module ignores the “don’t care” bits (0...2), but checks the sign bit (15). If bit 15 equals 1, the module sets the output value to 0V or 0 mA.

Scaled-for-PID Format

Word	Bit Position															
	15	14	13	12	11	10	9	8	7	6	5	4	3	2	1	0
0	0	0	Channel 0 Data 0…16,380												0	0
1	0	0	Channel 1 Data 0…16,380												0	0
2	0	0	Channel 2 Data 0…16,380												0	0
3	0	0	Channel 3 Data 0…16,380												0	0

Words 0...3 contain the analog output data for channels 0...3, respectively. The module ignores the “don’t care” bits (0 and 1), but checks the sign bit (15), and bit 14. If bit 15 equals 1, the module sets the output value to 0V or 0 mA. If bit 15 equals zero and bit 14 equals 1, the module sets the output value to 10.5V DC or 21 mA.

Configuration Data File

The configuration of the format for analog outputs is made at going to run (GTR). Changes made to the configuration file while in run mode have no effect on the outputs.

The configuration table for analog outputs is shown in the Configuration Data File table.

Configuration Data File

Word	Bit Position															
	15	14	13	12	11	10	9	8	7	6	5	4	3	2	1	0
0	reserved	Data Format Output Channel 0			Type/Range Select Output Channel 0				reserved							
1		Data Format Output Channel 1			Type/Range Select Output Channel 1				reserved							
2		Data Format Output Channel 2			Type/Range Select Output Channel 2				reserved							
3		Data Format Output Channel 3			Type/Range Select Output Channel 3				reserved							
4	reserved															
5	reserved															
6	reserved															
7	reserved															

Bit 15 and Bits 7…0 - Reserved

These bits are reserved and are not checked by the module.

Data Format (Bits 14…12)

These bits indicate the format of the data as shown in the following table. Other combinations of these bits are not supported and result in an error.

Bit Settings			Data Format
14	13	12	
0	0	0	Raw/Proportional
0	1	0	Scaled for PID
other			Not Supported

Type/Range Select (Bits 11…8)

These bits indicate the type and range as in the following table. Other combinations of these bits are not supported and result in an error.

Bit Settings				Data Format
11	**10**	**9**	**8**	
0	0	0	0	Voltage Mode 0…10V DC
0	0	1	1	Current Mode 4…20 mA
other				Not Supported

Configuration via RSLogix 500

The module can be configured using RSLogix 500 programming software, as shown below.

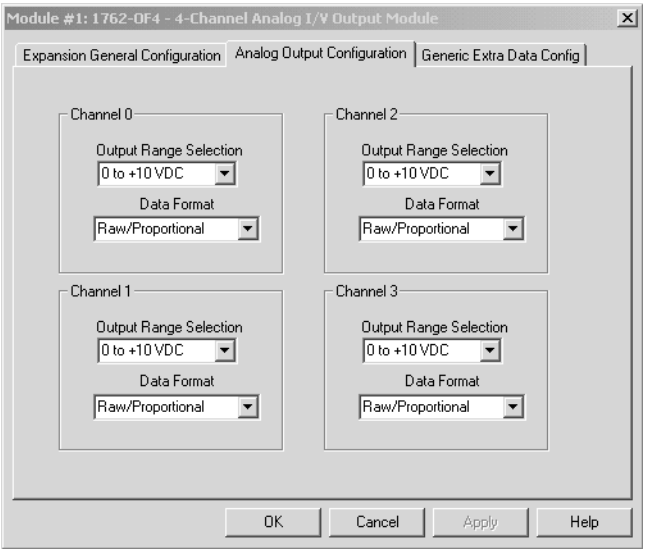

Specifications

Output

Attribute	Value
Number of outputs	4 single-ended (unipolar)
D/A converter type	R-2R Ladder Voltage Switching
Module update time	2.5 ms
Resistive load on current output	0…500 Ω (includes wire resistance)
Load range on voltage output	> 1KΩ
Reactive load, current output	< 0.1 mH
Reactive load, voltage output	< 1 μF
Typical overall accuracy[1]	±1.17% full scale @ -20…65 °C (-4…149 °F) ±0.5% full scale @ 25 °C (77 °F)
Output ripple range 0…500 Hz (referred to output range)	< ±0.1%
Non-linearity (in percent full scale)	< ±0.59%
Open and short-circuit protection	Continuous
Output protection	±32 mA

(1) Includes offset, gain, non-linearity and repeatability error terms.

General

Attribute	Value
Dimensions, HxWxD	90 x 40.4 x 87 mm (3.54 x 1.59 x 3.43 in.)
Approximate shipping weight (with carton)	235 g (8.28 oz)
Bus current draw, max	40 mA @ 5V DC 165 mA @ 24V DC
Analog normal operating range	Voltage: 0…10V DC Current: 4…20 mA
Full scale[1] analog ranges	Voltage: 0…10.5V DC Current: 0…21 mA
Resolution	12 bits (unipolar)
Repeatability[2]	±0.12%
Output group to system isolation	30V AC/30V DC rated working voltage[4] (IEC Class 2 reinforced insulation) type test: 500V AC or 707V DC for 1 minute
Module power LED	On: indicates power is applied.
Recommended cable	Belden 8761 (shielded)
Heat Dissipation	2.8 W
Wiring category[3]	2 - on signal ports
Pilot duty rating	Not rated
Enclosure type rating	IP20
North American temp code	T3C
Vendor ID code	1
Product type code	10
Product code	66

(1) The over- or under-range flag comes on when the normal operating range (over/under) is exceeded. The module continues to convert the analog output up to the maximum full scale range.

(2) Repeatability is the ability of the output module to reproduce output reading when the same controller value is applied to it consecutively, under the same conditions and in the same direction.

(3) Use this Conductor Category information for planning conductor routing. Refer to Industrial Automation Wiring and Grounding Guidelines, publication 1770-4.1.

(4) Rated working voltage is the maximum continuous voltage that can be applied at the terminals with respect to earth ground.

Environmental

Attribute	Value
Temperature, operating	IEC 60068-2-1 (Test Ad, Operating Cold), IEC 60068-2-2 (Test Bd, Operating Dry Heat), IEC 60068-2-14 (Test Nb, Operating Thermal Shock): -20... 65 °C (-4...149 °F)
Temperature, storage	IEC 60068-2-1 (Test Ab, Unpackaged Non-operating Cold), IEC 60068-2-2 (Test Bb, Unpackaged Non-operating Dry Heat), IEC 60068-2-14 (Test Na, Unpackaged Non-operating Thermal Shock): -40…85 °C (-40…185 °F)
Relative humidity	IEC 60068-2-30 (Test Db, Unpackaged Damp Heat): 5...95% non-condensing
Vibration	IEC 60068-2-6 (Test Fc, Operating): 5 g @ 10... 500 Hz
Altitude, operating max	2000 m (6562 ft)
Shock, operating	IEC 60068-2-27 (Test Ea, Unpackaged Shock): 30 g
Shock, nonoperating	IEC 60068-2-27 (Test Ea, Unpackaged Shock): Panel mount - 50 g DIN mount - 40 g
Emissions	CISPR 11 Group 1, Class A
ESD immunity	IEC 61000-4-2: 4 kV contact discharges 8 kV air discharges 4 kV indirect
Radiated RF immunity	IEC 61000-4-3: 10V/m with 1 kHz sine-wave 80% AM from 80…2700 MHz
EFT/B immunity	IEC 61000-4-4: ±2 kV @ 5 kHz on signal ports
Surge transient immunity	IEC 61000-4-5: ±1 kV shielded line-earth (CM) on signal ports
Conducted RF immunity	IEC 61000-4-6: 10V rms with 1 kHz sine-wave 80% AM from 150 kHz...80 MHz

Certifications

Certification (when product is marked)[1]	Value
c-UL-us	UL Listed Industrial Control Equipment, certified for US and Canada. See UL File E322657. UL Listed for Class I, Division 2 Group A,B,C,D Hazardous Locations, certified for U.S. and Canada. See UL File E334470.
CE	European Union 2004/108/EC EMC Directive, compliant with: EN 61326-1; Meas./Control/Lab., Industrial Requirements EN 61000-6-2; Industrial Immunity EN 61000-6-4; Industrial Emissions EN 61131-2; Programmable Controllers (Clause 8, Zone A & B)
C-Tick	Australian Radiocommunications Act, compliant with: AS/NZS CISPR 11; Industrial Emissions
KC	Korean Registration of Broadcasting and Communications Equipment, compliant with: Article 58-2 of Radio Waves Act, Clause 3

(1) See the Product Certification link at http://www.rockwellautomation.com/products/certification for Declaration of Conformity, Certificates, and other certification details.

Notes:

Notes:

Rockwell Automation Support

Rockwell Automation provides technical information on the Web to assist you in using its products. At http://www.rockwellautomation.com/support/, you can find technical manuals, a knowledge base of FAQs, technical and application notes, sample code and links to software service packs, and a MySupport feature that you can customize to make the best use of these tools.

For an additional level of technical phone support for installation, configuration and troubleshooting, we offer TechConnect support programs. For more information, contact your local distributor or Rockwell Automation representative, or visit http://www.rockwellautomation.com/support/.

Installation Assistance

If you experience a problem within the first 24 hours of installation, please review the information that's contained in this manual. You can also contact a special Customer Support number for initial help in getting your product up and running.

United States or Canada	1.440.646.3434
Outside United States or Canada	Use the Worldwide Locator at http://www.rockwellautomation.com/support/americas/phone_en.html, or contact your local Rockwell Automation representative.

New Product Satisfaction Return

Rockwell Automation tests all of its products to ensure that they are fully operational when shipped from the manufacturing facility. However, if your product is not functioning and needs to be returned, follow these procedures.

United States	Contact your distributor. You must provide a Customer Support case number (call the phone number above to obtain one) to your distributor to complete the return process.
Outside United States	Please contact your local Rockwell Automation representative for the return procedure.

Documentation Feedback

Your comments will help us serve your documentation needs better. If you have any suggestions on how to improve this document, complete this form, publication RA-DU002, available at http://www.rockwellautomation.com/literature/.

Allen-Bradley, Rockwell Automation, MicroLogix, and TechConnect are trademarks of Rockwell Automation, Inc.

Trademarks not belonging to Rockwell Automation are property of their respective companies.

Rockwell Otomasyon Ticaret A.Ş., Kar Plaza İş Merkezi E Blok Kat:6 34752 İçerenköy, İstanbul, Tel: +90 (216) 5698400

www.rockwellautomation.com

Power, Control and Information Solutions Headquarters

Americas: Rockwell Automation, 1201 South Second Street, Milwaukee, WI 53204-2496 USA, Tel: (1) 414.382.2000, Fax: (1) 414.382.4444
Europe/Middle East/Africa: Rockwell Automation, Vorstlaan/Boulevard du Souverain 36, 1170 Brussels, Belgium, Tel: (32) 2 663 0600, Fax: (32) 2 663 0640

Publication 1762-IN016D-EN-P - June 2013

Supersedes Publication 1762-IN016C-EN-P - March 2011

Copyright © 2013 Rockwell Automation, Inc. All rights reserved.