User Manual

Original Instructions

Allen-Bradley

PowerFlex Active Front End

Catalog Number 20Y
PowerFlex AFE/PowerFlex 700AFE
Frames 10 and 13, Firmware Revision Number 1.*xxx*

Allen-Bradley • Rockwell Software

Rockwell Automation

Important User Information

Read this document and the documents listed in the additional resources section about installation, configuration, and operation of this equipment before you install, configure, operate, or maintain this product. Users are required to familiarize themselves with installation and wiring instructions in addition to requirements of all applicable codes, laws, and standards.

Activities including installation, adjustments, putting into service, use, assembly, disassembly, and maintenance are required to be carried out by suitably trained personnel in accordance with applicable code of practice.

If this equipment is used in a manner not specified by the manufacturer, the protection provided by the equipment may be impaired.

In no event will Rockwell Automation, Inc. be responsible or liable for indirect or consequential damages resulting from the use or application of this equipment.

The examples and diagrams in this manual are included solely for illustrative purposes. Because of the many variables and requirements associated with any particular installation, Rockwell Automation, Inc. cannot assume responsibility or liability for actual use based on the examples and diagrams.

No patent liability is assumed by Rockwell Automation, Inc. with respect to use of information, circuits, equipment, or software described in this manual.

Reproduction of the contents of this manual, in whole or in part, without written permission of Rockwell Automation, Inc., is prohibited

Throughout this manual, when necessary, we use notes to make you aware of safety considerations.

	WARNING: Identifies information about practices or circumstances that can cause an explosion in a hazardous environment, which may lead to personal injury or death, property damage, or economic loss.
	ATTENTION: Identifies information about practices or circumstances that can lead to personal injury or death, property damage, or economic loss. Attentions help you identify a hazard, avoid a hazard, and recognize the consequence.
IMPORTANT	Identifies information that is critical for successful application and understanding of the product.

Labels may also be on or inside the equipment to provide specific precautions.

	SHOCK HAZARD: Labels may be on or inside the equipment, for example, a drive or motor, to alert people that dangerous voltage may be present.
	BURN HAZARD: Labels may be on or inside the equipment, for example, a drive or motor, to alert people that surfaces may reach dangerous temperatures.
	ARC FLASH HAZARD: Labels may be on or inside the equipment, for example, a motor control center, to alert people to potential Arc Flash. Arc Flash will cause severe injury or death. Wear proper Personal Protective Equipment (PPE). Follow ALL Regulatory requirements for safe work practices and for Personal Protective Equipment (PPE).

Preface

Summary of Changes 9
Intended Audience 9
What Is Not in This Manual 9
Manual Conventions 10
Rockwell Automation Support 10
Technical Support 10
Additional Resources 10
Drive Information 11
General Precautions 12
Catalog Number Explanation 13
Description of Operation 14
Benefits of the AFE. 16
AFE in IP00 Open Chassis Configuration. 17

AFE in IP20 2500 MCC Style Enclosure – Installation/Wiring

Chapter 1

Main Component Sections. 20
Frame 10 20
Frame 13 21
Main Component Locations 22
Frame 10 22
Frame 13 23
Mounting Considerations. 24
Operating Temperatures 24
Minimum Mounting Clearances. 24
AC Supply Source Considerations 26
Unbalanced, Ungrounded, or Resistive Grounded Distribution Systems. 26
Input Power Conditioning 27
Grounding Requirements 27
Recommended Grounding Scheme 27
Safety Ground - PE and Shield Termination - SHLD 29
Fuses and Circuit Breakers 29
Power Wiring. 29
Power Cable Types Acceptable for 400...690 Volt Installations. 29
Unshielded Cable 30
Shielded Cable 30
Armored Cable 30
Cable Trays and Conduit 31
Select and Verify Control Transformer Voltage 31
Power Terminals for AFE in IP20 2500 MCC Style Enclosure 34
Route the AC Input, Ground (PE), and DC Bus Output Wiring for AFE in IP20 2500 MCC Style Enclosure 36

Disconnect the Common Mode Capacitors 37
Frame 10 LCL Filter 37
Frame 13 LCL Filter 38
Frame 10 or Frame 13 Power Structure 39
Use the AFE with PowerFlex Drives 39
Control Wiring 40
Signal and Control Wire Types 41
I/O Terminal Blocks 42
I/O Cable Grounding 43
Typical I/O Wiring 45
Analog I/O Configuration 46
Hardware Enable Circuitry 46
Analog I/O Wiring Examples for AFE in IP20 2500 MCC Style Enclosure 47
Precharging the AFE 47
Introduction 47
Important Guidelines 48
CE Conformity 49
Low Voltage Directive (2006/95/EC) 49
EMC Directive (2004/108/EC) 49
General Notes 49
Essential Requirements for CE Compliance 49

Chapter 2

AFE in IP21 Rittal Enclosure – Installation/Wiring

Main Component Sections 52
Frame 10 52
Frame 13 53
Main Component Locations 54
Frame 10 54
Frame 13 55
Mounting Considerations 56
Operating Temperatures 56
Minimum Mounting Clearances 56
AC Supply Source Considerations 58
Unbalanced, Ungrounded, or Resistive Grounded Distribution Systems 58
Input Power Conditioning 59
Grounding Requirements 59
Recommended Grounding Scheme 59
Safety Ground - PE 61
Shield Termination - SHLD 61
Fuses and Circuit Breakers 62
Power Wiring 62
Power Cable Types Acceptable for 400...690 Volt Installations 62
Unshielded Cable 62
Shielded Cable 63

Armored Cable 63
Cable Trays and Conduit 64
Select and Verify Control Transformer Voltage 64
Power Terminals for AFE in IP21 Rittal Enclosure 66
DC Bus Output Wiring. 67
Route the AC Input, Ground (PE), and DC Bus Output Wiring for AFE in IP21 Rittal Enclosure 68
Disconnect the Common Mode Capacitors 69
Frame 10 LCL Filter. 69
Frame 13 LCL Filter. 70
Frame 10 Power Structure. 72
Frame 13 Power Structure. 73
Using the AFE with PowerFlex Drives 74
Control Wiring 74
Signal and Control Wire Types 75
I/O Terminal Blocks. 76
I/O Cable Grounding. 77
Typical I/O Wiring. 78
Analog I/O Configuration 79
Hardware Enable Circuitry. 80
Analog I/O Wiring Examples for AFE in IP21 Rittal Enclosure 80
Precharging the AFE 81
Introduction 81
Important Guidelines 81
CE Conformity 82
Low Voltage Directive (2006/95/EC). 82
EMC Directive (2004/108/EC) 82
General Notes. 82
Essential Requirements for CE Compliance. 82

Startup

Chapter 3

AFE in IP20 2500 MCC Style Enclosure 85
Startup Procedure 85
Control Devices 88
Modes of Operation 88
AFE in IP21 Rittal Enclosure. 90
Startup Procedure 90
Control Devices 92
MCCB (Motor-controlled Circuit Breaker) and Modes of Operation 92

Programming and Parameters

Chapter 4

About Parameters 95
How AFE Parameters are Organized. 96
File-Group-Parameter Order 96

Basic Parameter View 97
Advanced Parameter View 98
Monitor File 99
Dynamic Control File 101
Utility File 105
Communication File 111
Inputs and Outputs File 113
Parameter Cross Reference – by Name 117
Parameter Cross Reference – by Number 120

Chapter 5

Troubleshooting

AFE Status 125
Front Panel Indications 125
HIM Indication 126
Faults and Alarms 126
Manually Clearing Faults 127
Fault and Alarm Descriptions 127
Clear the Alarms 131
Common Symptoms and Corrective Actions 131
Technical Support. 135

Appendix A

Supplemental Information

Specifications 137
Derating Guidelines 139
Ambient Temperature/Load 139
Altitude/Load 400/480V AC Input 139
Altitude/Load 600/690V AC Input 139
AFE Current Ratings and Watts Loss 140
400 Volt AC Input Ratings. 140
480 Volt AC Input Ratings. 140
600 Volt AC Input Ratings. 140
690 Volt AC Input Ratings. 140
Fusing and Circuit Breakers for AFE in IP20 2500
MCC Style Enclosure 141
AC Input Fuse and Circuit Breaker Ratings. 141
DC Bus Output Fuse Ratings. 141
Fusing and Circuit Breakers for AFE in IP21 Rittal Enclosure. . . . 142
AC Input Fuse and Circuit Breaker Ratings. 142
DC Bus Output Fuse Ratings. 142
Dimensions. 143
DPI Communication Configurations 152
Typical Programmable Controller Configurations. 152
Logic Command Word for PowerFlex 700/700H/700S
Drives 152
Logic Status Word for PowerFlex 700/700H/700S Drives . . . 153
Logic Command Word for PowerFlex 750-Series Drives. 155

Logic Status Word for PowerFlex 750-Series Drives 156

Appendix B

HIM Overview

External and Internal Connections 159
LCD Display Elements 160
ALT Functions 160
Menu Structure 161
Diagnostics Menu 161
Parameter Menu. 162
Device Select Menu. 162
Memory Storage Menu. 162
Start-up Menu 162
Preferences Menu 162
View and Edit Parameters. 163
HIM 163
Numeric Keypad Shortcut. 163
Remove/Install the HIM 163

Appendix C

Application Notes

Sizing Guidelines. 165
Basic Procedure to Size the AFE 165
Advanced Procedure to Size the AFE. 166
Voltage Boost 167
Paralleling AFEs. 168
Guidelines for AFEs in IP20 2500 MCC Style Enclosure 168
Guidelines for AFEs in IP21 Rittal Enclosure 172
Paralleling an AFE with One or More PowerFlex SCR Bus Supplies. 176

Index 177

Notes:

The purpose of this manual is to provide the basic information to install, startup, and troubleshoot the PowerFlex® Active Front End (AFE).

Topic	Page
Summary of Changes	9
Intended Audience	9
What Is Not in This Manual	9
Manual Conventions	10
Rockwell Automation Support	10
Additional Resources	10
General Precautions	12
Catalog Number Explanation	13
Description of Operation	14
Benefits of the AFE	16
AFE in IP00 Open Chassis Configuration	17

Summary of Changes

This manual contains new and updated information as indicated in the following table.

Topic	Page
Updated the basic one-line diagram for a Frame 10 AFE in IP20 2500 MCC style enclosure to include the factory-installed common mode core at the DC bus output.	Figure 6 on page 20
Updated the system schematics for a Frame 13 AFE in IP20 2500 MCC style enclosure to include the factory-installed common mode core at the DC bus output.	Figure 7 on page 21
Updated the drawing for connecting parallel Frame 10 AFEs in IP20 2500 MCC style enclosures to include the factory-installed common mode core at the DC bus output.	Figure 56 on page 170
Updated the drawing for connecting parallel Frame 13 AFEs in IP20 2500 MCC Style Enclosures to include the factory-installed common mode core at the DC bus output.	Figure 57 on page 171
Added information for KCC and Regulatory compliance mark (RCM) certifications.	137

Intended Audience

This manual is intended for qualified personnel. You must be able to program and operate an Active Front End unit and adjustable frequency AC drives. In addition, you must have an understanding of the parameter settings and functions.

What Is Not in This Manual

This manual provides installation, start-up, and programming information for the PowerFlex Active Front End. For detailed drive information, see Drive Information on page 11.

Manual Conventions

The following conventions are used throughout this manual:

- In this manual, we also refer to the PowerFlex Active Front End as AFE, Active Front End, or unit.
- To differentiate parameter names and LCD display text from other text, the following conventions are used:
  - Parameter names appear in [brackets].
    For example: [DC Bus Voltage].
  - Display text appears in 'quotes'.
    For example, 'Enabled'.

Rockwell Automation Support

Contact your local Rockwell Automation representative for these items:

- Sales and order support
- Product technical training
- Warranty support
- Support service agreements

Technical Support

For technical support, first review the information in Chapter 5. If you still need help, click the link for Allen-Bradley® Drives Service and Support website at http://www.ab.com/support/abdrives. When you contact Technical Support, be prepared to provide the information that is listed on page 135.

Additional Resources

These documents contain additional information concerning related products from Rockwell Automation.

Resource	Description
PowerFlex Active Front End—Frame 10 Hardware Service Manual, publication 20Y-TG001	Provides information for how to troubleshoot Frame 10 AFE units.
PowerFlex Active Front End—Frame 13 Hardware Service Manual, publication 20Y-TG002	Provides information for how to troubleshoot Frame 13 AFE units.
PowerFlex 700H, 700S, and 700AFE Drive Fan Systems Installation Instructions, publication PFLEX-IN029	Provides information for how to install drive fan systems.
Drives in Common Bus Configurations, publication DRIVES-AT002	Provides information for common bus configurations.
Wiring and Grounding Guidelines for Pulse Width Modulated (PWM) AC Drives, publication DRIVES-IN001	Provides information for wiring and grounding AC drives.
Preventive Maintenance of Industrial Control and Drive System Equipment, publication DRIVES-TD001	Provides information for preventative maintenance control and drive systems.
Safety Guidelines for the Application, Installation, and Maintenance of Solid-state Control, publication SGI-1.1	Provides safety guidelines for drive systems.
Guarding Against Electrostatic Damage, publication 8000-4.5.2	Provides information for how to prevent electrostatic damage.
Industrial Automation Wiring and Grounding Guidelines, publication 1770-4.1	Provides general guidelines for installing a Rockwell Automation industrial system.
Product Certifications website, http://www.rockwellautomation.com/global/certification/overview.page	Provides declarations of conformity, certificates, and other certification details.

You can view or download publications at http://www.rockwellautomation.com/global/literature-library/overview.page. To order paper copies of technical documentation, contact your local Allen-Bradley distributor or Rockwell Automation sales representative.

Drive Information

The following publications provide detailed information for PowerFlex drives that are compatible with the PowerFlex Active Front End.

Drive	Resource	Description
PowerFlex 700 Series A Drive PowerFlex 700 Series B Drive	PowerFlex 700 Series A User Manual, publication 20B-UM001 PowerFlex 700 Series B User Manual, publication 20B-UM002 PowerFlex 700 Frames 0…6 Installation Instructions, publication 20B-IN019 PowerFlex 700 Frames 7…10 Installation Instructions, publication 20B-IN014 PowerFlex 70/700 Reference Manual, publication PFLEX-RM001 PowerFlex 70 Installation Instructions, publication 20A-IN009 PowerFlex 70EC/700VC Reference Manual, publication PFLEX-RM004 PowerFlex 700 Technical Data, publication 20B-TD001 PowerFlex Dynamic Braking Resistor Calculator, publication PFLEX-AT001	Provides information for how to install, configure, and use PowerFlex 700 Series A and Series B drives.
PowerFlex 700H Drive	PowerFlex 700H Installation Manual, publication PFLEX-IN006 PowerFlex 700H Programming Manual, publication 20C-PM001 PowerFlex 700H Technical Data, publication 20C-TD001	Provides information for how to install, configure, and use PowerFlex 700H drives.
PowerFlex 700S Drive	PowerFlex 700S with Phase II Control Installation Manual (Frames 1…6), publication 20D-IN024 PowerFlex 700S with Phase II Control Installation Manual (Frames 9…14), publication PFLEX-IN006 PowerFlex 700S with Phase II Control Programming Manual (All Frame Sizes), publication 20D-PM001 PowerFlex 700S with Phase II Control Reference Manual, publication PFLEX-RM003 PowerFlex 700S with Phase II Control Technical Data, publication 20D-TD002	Provides information for how to install, configure, and use PowerFlex 700S drives.
PowerFlex 750-Series Drive	PowerFlex 750-Series Drive Installation Instructions, publication 750-IN001 PowerFlex 750-Series Drive Programming Manual, publication 750-PM001 PowerFlex 750-Series Technical Data, publication 750-TD001	Provides information for how to install, configure, and use PowerFlex 750-Series drives.
PowerFlex SCR Bus Supply	PowerFlex SCR Bus Supply User Manual, publication 20S-UM001	Provides information for SCR bus supplies.

You can view or download publications at http://www.rockwellautomation.com/global/literature-library/overview.page. To order paper copies of technical documentation, contact your local Allen-Bradley distributor or Rockwell Automation sales representative.

To find your local Rockwell Automation distributor or sales representative, visit http://www.rockwellautomation.com/global/distributor-locator/sales-locator.page

General Precautions

ATTENTION: To avoid an electric shock hazard, verify that the voltage on the bus capacitors has discharged completely before servicing. Check the DC bus voltage between the +DC and -DC terminals, between the +DC terminal and the chassis, and between the -DC terminal and the chassis. The voltage must be zero for all three measurements.

ATTENTION: To guard against personal injury and equipment damage that is caused by an arc flash, you must identify the arc flash requirements per NFPA 70E.

ATTENTION: The PowerFlex Active Front End contains electrostatic discharge (ESD) sensitive parts and assemblies that can be damaged if you do not follow ESD control procedures. Static control precautions are required when you install, test, service, or repair this unit. If you are unfamiliar with static control procedures, see Guarding Against Electrostatic Damage, publication 8000-4.5.2, or any other applicable ESD protection handbook.

ATTENTION: An incorrectly applied or installed PowerFlex Active Front End can result in component damage or a reduction in product life. Wiring or application errors, such as undersizing the motor, incorrect or inadequate AC supply, or excessive ambient temperatures, can result in malfunction of the system.

ATTENTION: Only qualified personnel familiar with adjustable frequency AC drives and associated machinery can plan or implement the installation, start-up, and subsequent maintenance of the system. Failure to comply can result in personal injury and/or equipment damage.

Catalog Number Explanation

Position

1…3	4	5…7	8	9	10	11	12	13	14	15	16
20Y	**D**	**460**	**A**	**0**	**A**	**N**	**N**	**A**	**N**	**A**	**0**
a	*b*	*c*	*d*	*e*	*f*	*g*	*h*	*i*	*j*	*k*	*l*

a

Drive

Code	Type
20Y	PowerFlex AFE/ PowerFlex 700AFE

b

Voltage Rating

Code	Input Voltage	Phase
D	400/480V AC	3
F	600/690V AC	3

c1

400/480V Input

Code	Input Amps ND (HD)	kW at 400V ND (HD)	Hp at 480V ND (HD)	Frame Size
460	460 (385)	309 (258)	497 (416)	10
1K3	1300 (1150)	873 (772)	1404 (1242)	13

c2

600/690V Input

Code	Input Amps ND (HD)	Hp at 600V ND (HD)	kW at 690V ND (HD)	Frame Size
325	325 (240)	439 (324)	376 (278)	10
1K0	1030 (1)	1390 (1)	1193 (1)	13

(1) There is no heavy-duty rating for Frame 13 600/690V.

d

Enclosure

Code	Type	Conformal Coating
A (1)	IP21 Rittal Enclosure, NEMA/UL Type 1	Yes
N (2)	IP00, open-chassis	Yes
P (3)	IP20, NEMA/UL Type 1 2500 MCC Style enclosure with power bus, 800 mm (31.5 in.) deep, standard cabinet color (RAL7032)	Yes
W (3)	IP20, NEMA/UL Type 1 2500 MCC Style enclosure with power bus, 800 mm (31.5 in.) deep, CenterLine 2100 gray (ASA49)	Yes

(1) Includes AFE power module, LCL filter, control assembly, motor-controlled circuit breaker, and precharge circuit in a Rittal enclosure.
(2) Restricted to SSB. Includes AFE power module, LCL filter, and control assembly. Excludes circuit breaker or precharge circuit.
(3) Includes AFE power module, LCL filter, control assembly, Incoming circuit breaker, and precharge circuit in 2500 MCC Style enclosure. Frame 10 has 1250 amp DC bus and Frame 13 has 3000 amp DC bus.

e

HIM

Code	Operator Interface	Mount
0	No HIM	AFE

f

Documentation

Code	Documents	Ship Carton
A	User Manual	Yes

g

Brake

Code	With Brake IGBT
N	No

h

Brake Resistor

Code	With Resistor
N	No

i

Equipment Type

Code	Description
A	AFE with power line filter

j

Comm Slot

Code	Communication Option
N	None

k

I/O Option

Code	Type	I/O Volts
A (1)	Standard, with outputs	24V DC

(1) A 120V AC I/O option is not available.

l

Feedback

Code	Type	Installed On
0	None	N/A

Description of Operation

The PowerFlex Active Front End is a regenerative DC bus supply that is used to supply DC power to a lineup of common DC bus drives, or one common bus drive. The AFE uses a pulse width modulated (PWM)-controlled IGBT converter to allow bi-directional power flow to the AC line. Figure 1 and Figure 2 show examples of the AFE powering a lineup of PowerFlex 755 drives and the AFE powering one PowerFlex 755 drive. For additional information and bus conditioning requirements, see Drives in Common Bus Configurations, publication DRIVES-AT002.

Figure 1 - AFE Supplying a Lineup of Common Bus Drives

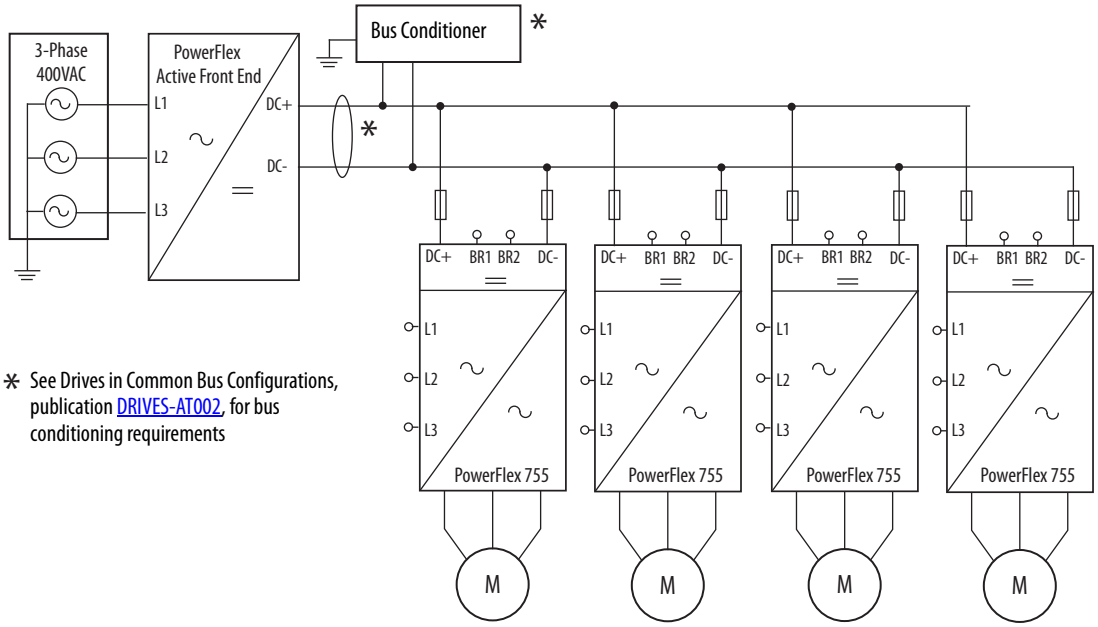

Figure 2 - AFE Supplying a Single Drive

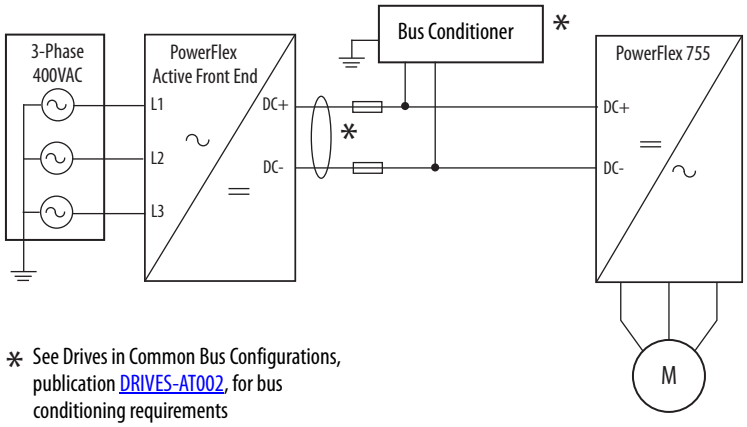

Active current and reactive currents are calculated from the three input phase current measurements (I_{L1}, I_{L2}, and I_{L3}) as shown in Figure 3. The DC voltage controller is a PI type regulator. A DC voltage reference sets the value of the DC link voltage to be maintained. It is compared to measured DC voltage to obtain a DC voltage error as the input for the DC voltage controller.

The output of the DC voltage controller is the active current reference, which is compared to the measured active current. The error between them is the input for the active current controller. The output of the active current controller changes the modulation index and controls the inverter voltage.

The reactive current reference can be used for reactive power compensation. A positive reactive current reference indicates inductive and a negative reactive current reference indicates capacitive reactive power compensation. The default value of the reactive current reference parameter is zero. The set value of the reactive current reference is compared to its measured value and the error is fed to the PI regulator. The PI regulator is also referred to as the synchronizing controller because its function is to keep the inverter synchronized with line supply. The frequency reference to the AFE is derived from the reactive current controller output. Normally the active current Kp, active current Ki, reactive current Kp, and reactive current Ki default values of the two current controllers are satisfactory with the standard LCL filter. Do not change the default values.

Figure 3 - AFE Block Diagram

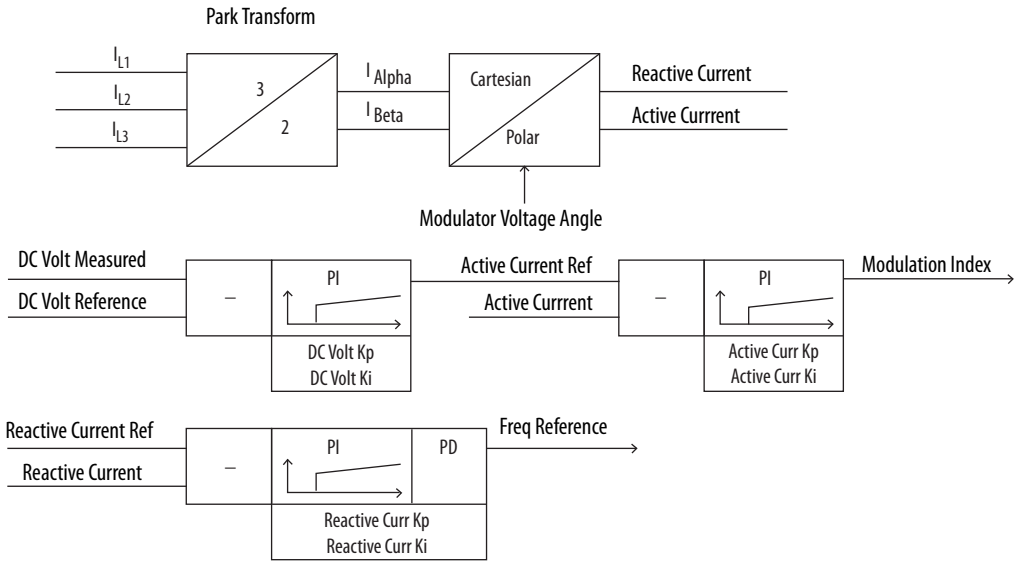

Benefits of the AFE

The PowerFlex Active Front End provides these benefits:

- Energy savings with regenerative braking – instead of wasted energy with resistor brake technology, regenerative braking puts the energy back into the system to be used by other equipment.
- Low AC input harmonics – the active front end provides low harmonics to meet IEEE 519 and CE at its input terminals.
- Improved power factor – the AFE actively controls the power factor regardless of motor speed and load. In addition, the PowerFlex AFE can be used for power factor correction on the power system.
- Voltage boost – the AFE boosts the DC voltage. See Voltage Boost on page 167 for guidelines regarding voltage boost. This voltage boost also helps protect critical processes from the potentially disruptive effects of input voltage dips and sags.

ATTENTION: The PowerFlex Active Front End can be used for voltage boost, but cannot be used to lower the DC bus voltage. The minimum DC bus voltage is limited by the rectified diode bridge voltage.

AFE in IP00 Open Chassis Configuration

Figure 4 shows a basic one-line diagram for an AFE Frame 10 in an IP00, NEMA/UL Open chassis configuration, and the parts that the customer must supply.

Figure 4 - Basic One-line Diagram for an AFE Frame 10 in IP00 Open Chassis Configuration

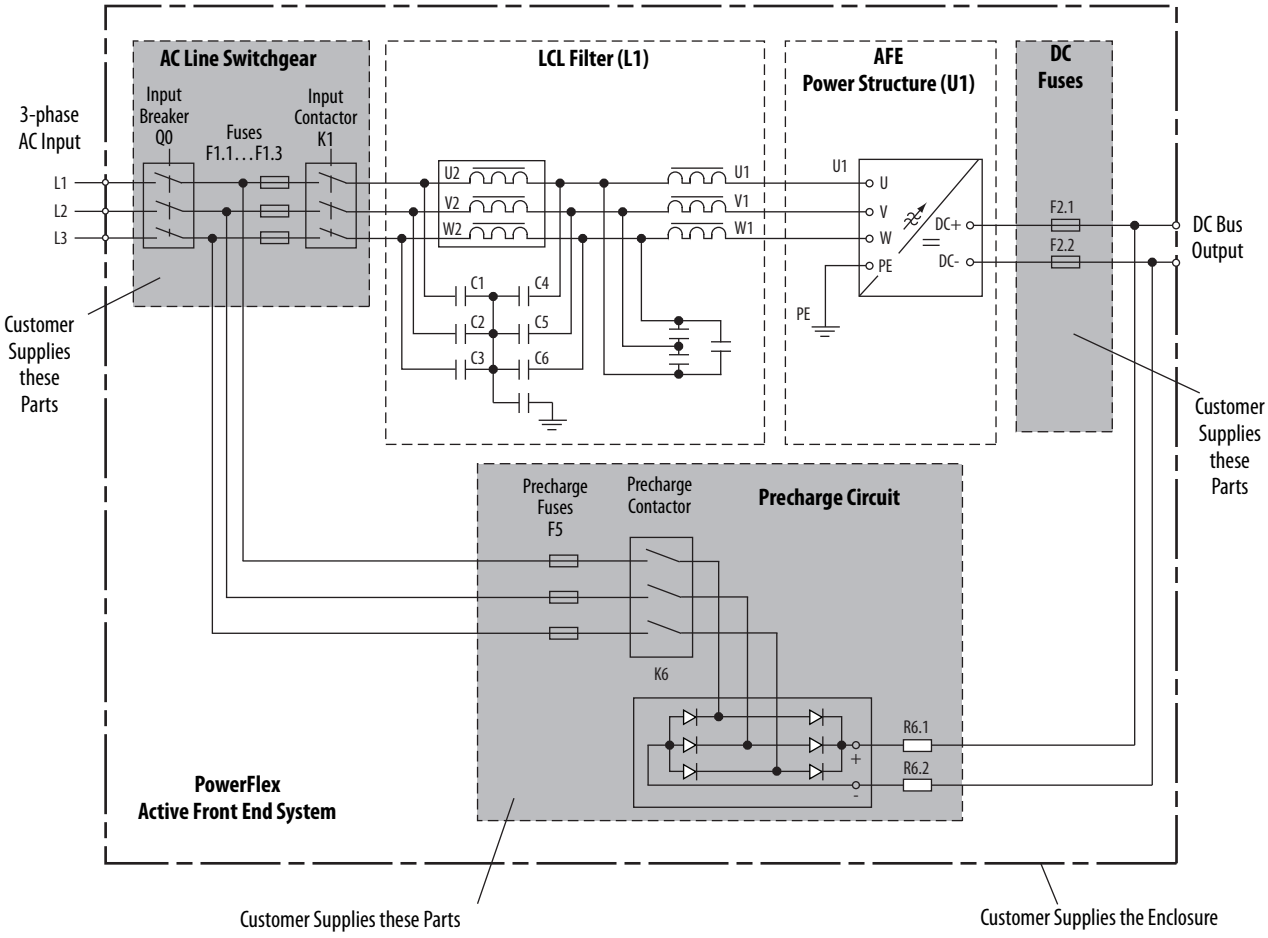

Figure 5 shows a basic one-line diagram for an AFE Frame 13 in an IP00, NEMA/UL Open chassis configuration, and the parts that the customer must supply.

Figure 5 - Basic One-line Diagram for an AFE Frame 13 in IP00 Open Chassis Configuration

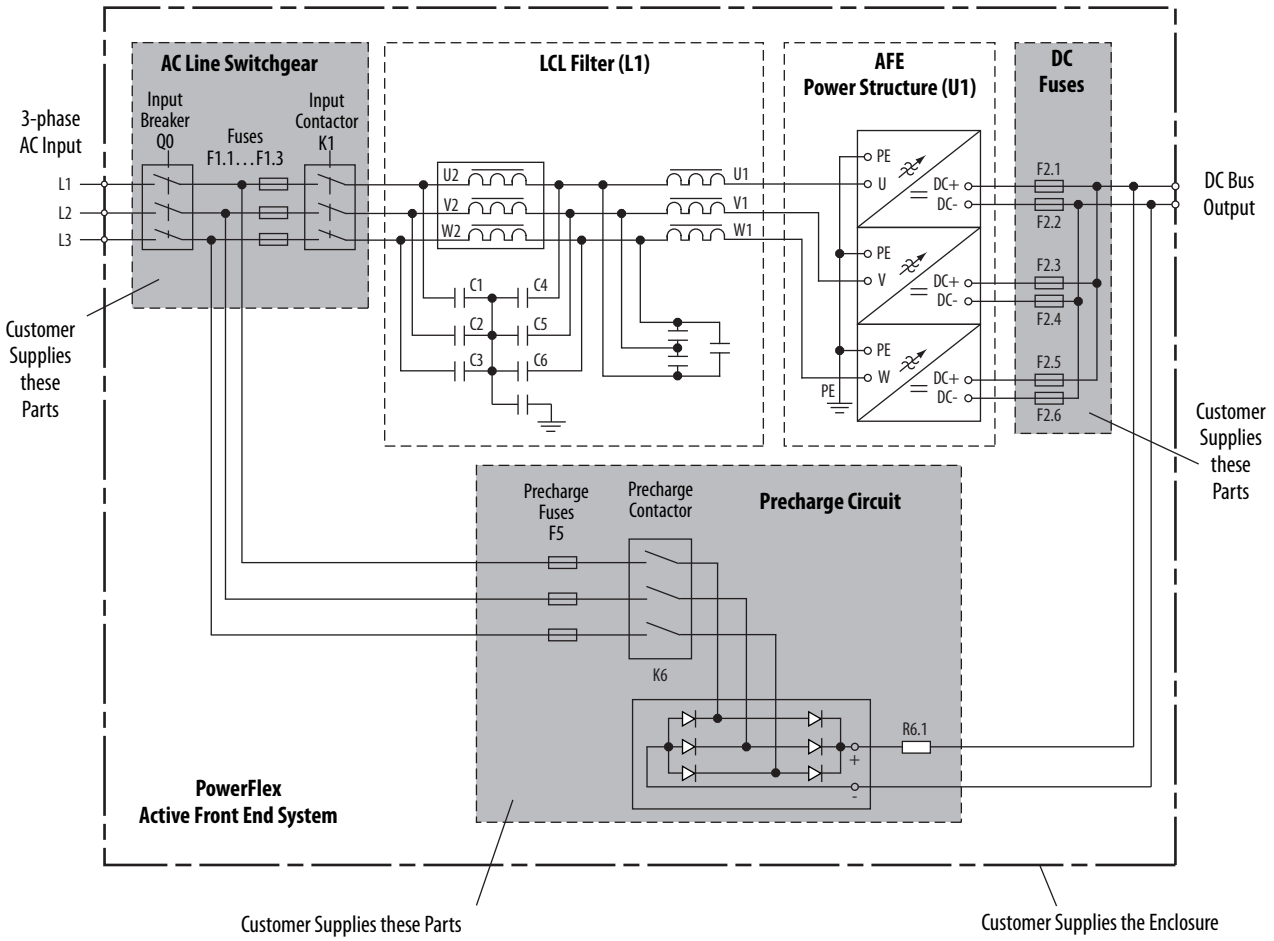

AFE in IP20 2500 MCC Style Enclosure – Installation/Wiring

This chapter provides information on how to install and wire the PowerFlex® Active Front End in an IP20 2500 MCC Style enclosure. For information on how to install and wire the AFE in an IP21 Rittal enclosure, see Chapter 2.

Topic	Page
Main Component Sections	20
Main Component Locations	22
Mounting Considerations	24
AC Supply Source Considerations	26
Grounding Requirements	27
Fuses and Circuit Breakers	29
Power Wiring	29
Disconnect the Common Mode Capacitors	37
Use the AFE with PowerFlex Drives	39
Control Wiring	40
Precharging the AFE	47
CE Conformity	49

Most start-up difficulties are the result of incorrect wiring. Verify that the wiring is done as instructed. Read and understand the instructions before you begin to installation the AFE.

ATTENTION: The following information is a guide for proper installation. Rockwell Automation does not assume responsibility for the compliance or the noncompliance to any code, national, local, or otherwise, for the proper installation of this 700AFE or associated equipment. A hazard of personal injury and/or equipment damage exists if codes are ignored during installation.

Main Component Sections

This section describes the main component sections of AFE Frame 10 and Frame 13 systems in an IP20 2500 MCC Style enclosure.

Frame 10

Figure 6 shows a basic one-line diagram for an AFE Frame 10 in an IP20 2500 MCC Style enclosure. The main component sections consist of the following items:

- AC line switchgear consisting of the input circuit breaker (Q0), fuses (F1.1...F1.3), and input contactor (K1)
- LCL filter (L1)
- Precharge circuit
- AFE power structure (U1) with AFE control assembly
- DC fuses (F2.1 and F2.2)

Figure 6 - Basic One-line Diagram for a Frame 10 AFE in IP20 2500 MCC Style Enclosure

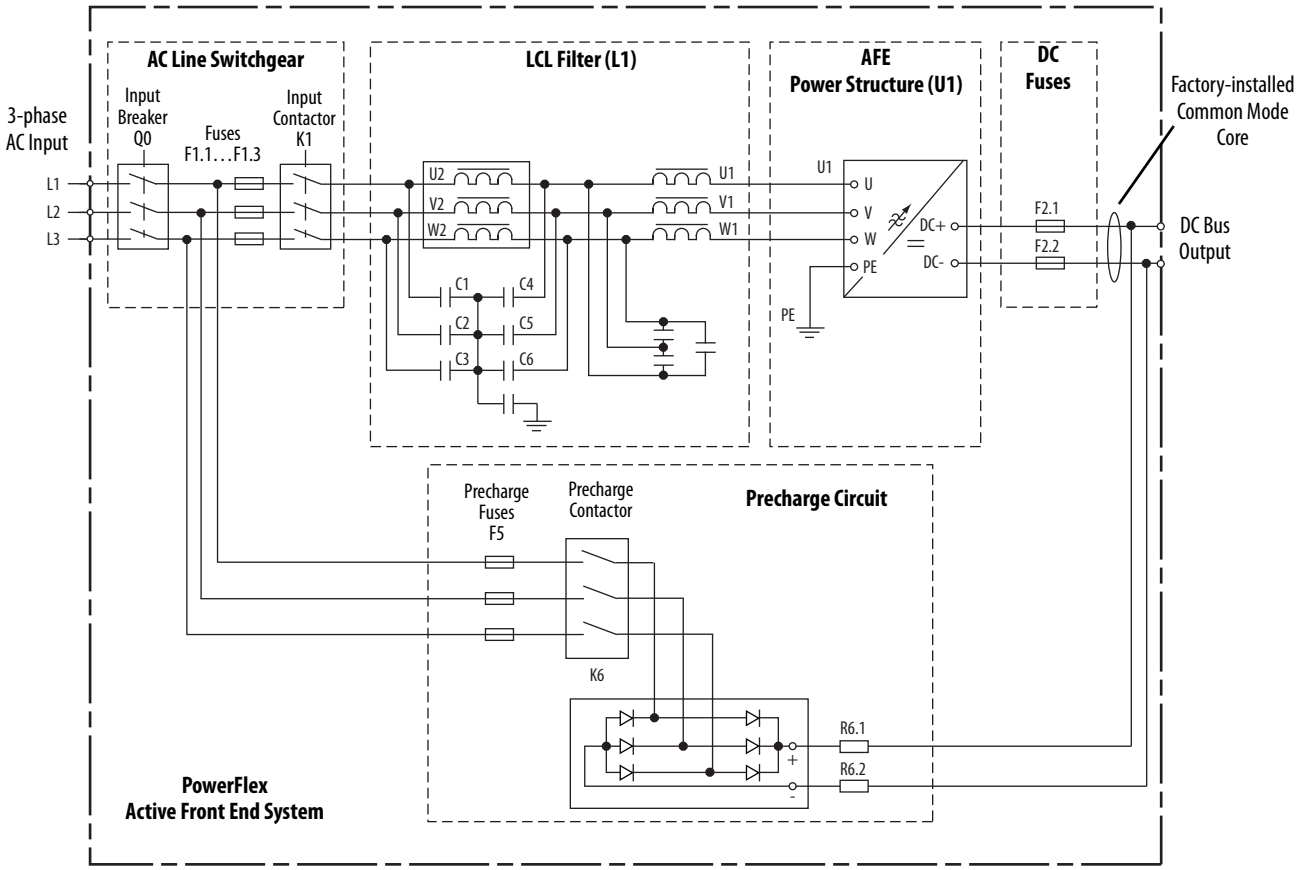

Frame 13

Figure 7 shows a basic one-line diagram for an AFE Frame 13 in an IP20 2500 MCC Style enclosure. The main component sections consist of the following items:

- AC line switchgear consisting of the input circuit breaker (Q0), fuses (F1.1...F1.3), and input contactor (K1)
- LCL filter (L1)
- Precharge circuit
- AFE power structure (U1) with AFE control assembly
- DC fuses (F2.1...F2.6)

Figure 7 - Basic One-line Diagram for a Frame 13 AFE in IP20 2500 MCC Style Enclosure

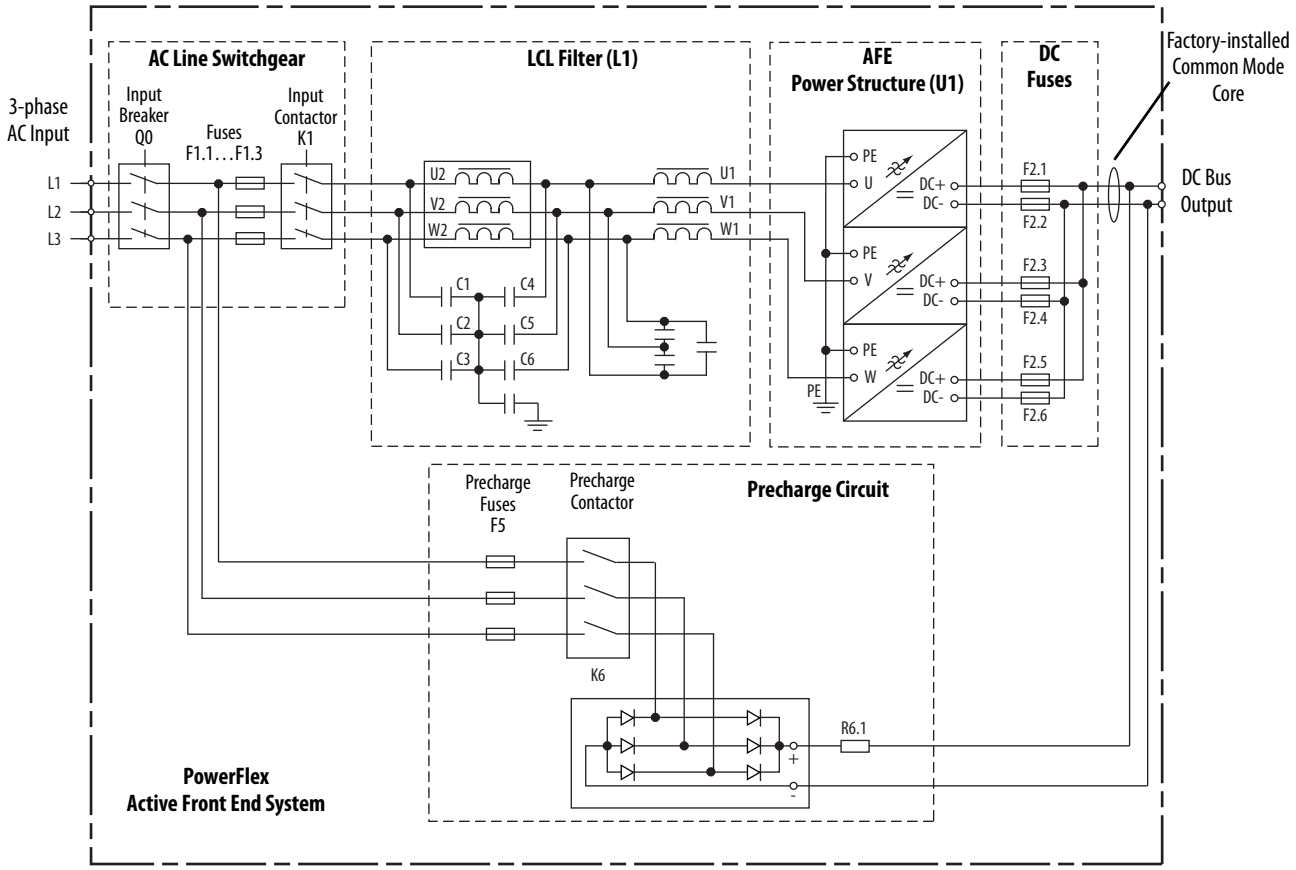

Main Component Locations

This section shows the main component locations for AFE Frame 10 and Frame 13 systems in an IP20 2500 MCC Style enclosure.

Frame 10

Figure 8 shows the main components of the AFE Frame 10 system in an IP20 2500 MCC Style enclosure.

Figure 8 - AFE Frame 10 Main Component Locations in IP20 2500 MCC Style Enclosure

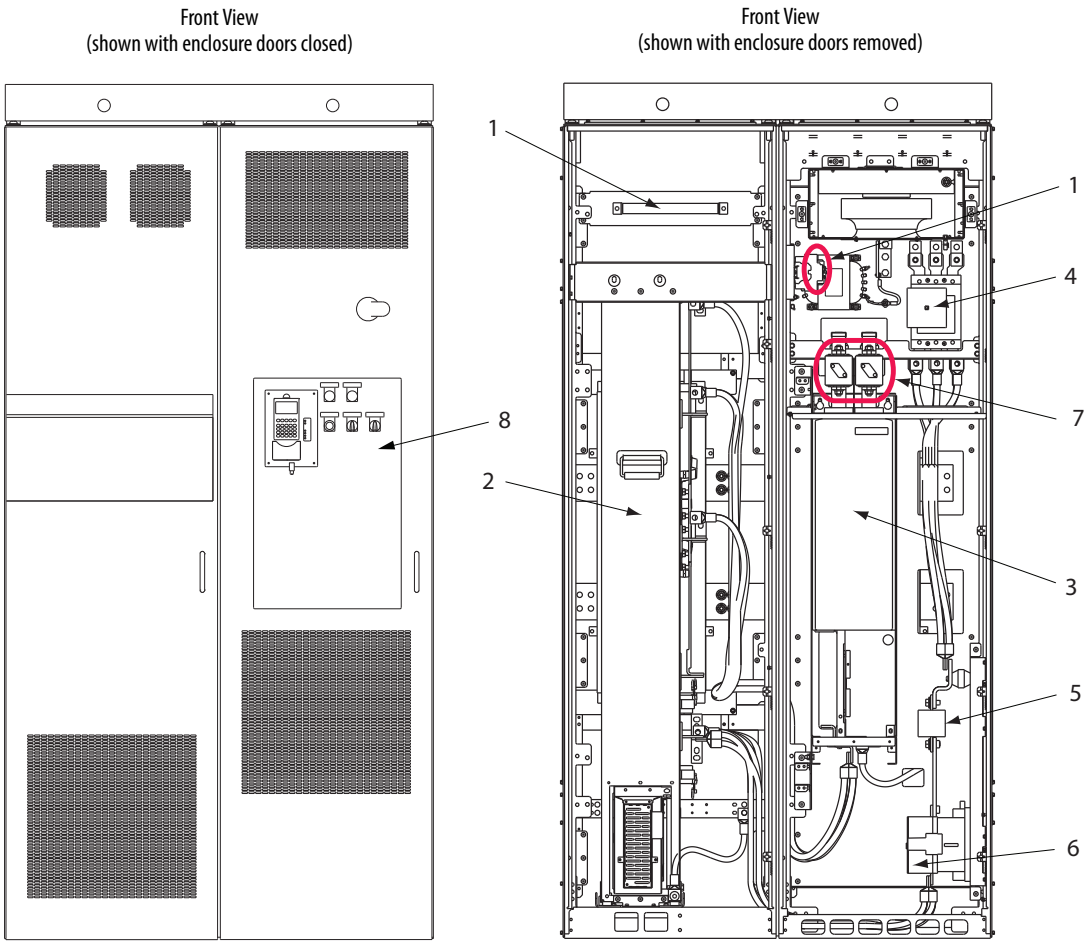

Item	Description	
1	Precharge circuit and precharge resistor	
2	LCL filter (L1)	
3	Active Front End power structure (U1)	
4	AC line switchgear	Input circuit breaker
5		Input fuses
6		Input contactor
7	DC fuses	
8	AFE control assembly (on the AFE door and shown with user-installed Human Interface Module [HIM])	

Frame 13

Figure 9 shows the main components of the AFE Frame 13 system in an IP20 2500 MCC Style enclosure.

Figure 9 - AFE Frame 13 Main Component Locations in IP20 2500 MCC Style Enclosure

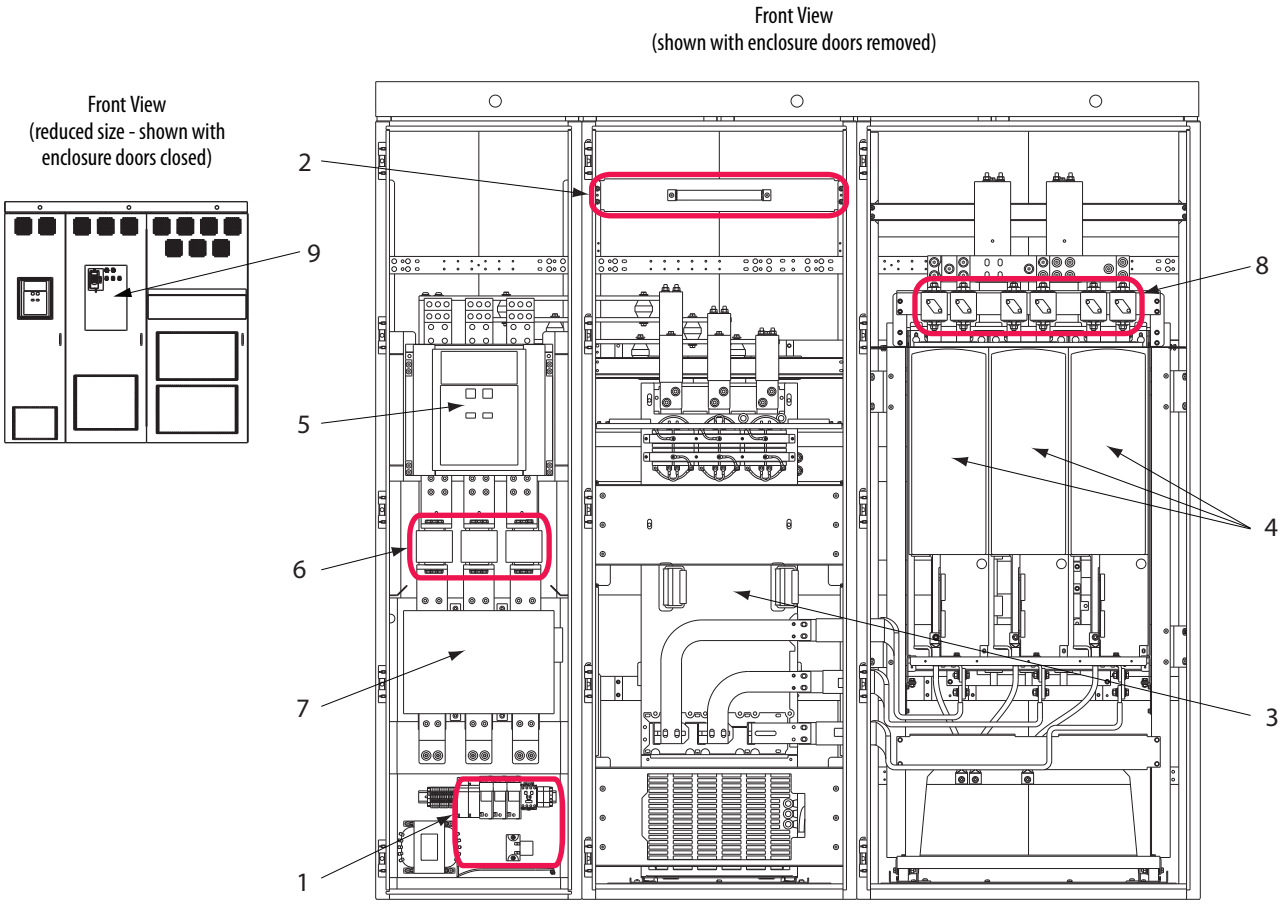

Item	Description	
1	Precharge circuit	
2	Precharge resistor	
3	LCL filter (L1)	
4	Active Front End power structure (U1)	
5	AC line switchgear	Input circuit breaker
6		Input fuses
7		Input contactor
8	DC fuses	
9	AFE control assembly (on the AFE door and shown with user-installed HIM)	

Mounting Considerations

When mounting the Active Front End, consider the following information.

Operating Temperatures

Frame Size	Surrounding Air Temperature (2)		Minimum Airflow	
	Normal Duty	Heavy Duty	Power Module	LCL Filter
10	0…40 °C (32…104 °F)	0…40 °C (32…104 °F)	1400 m^3/hr (824 cfm)	1100 m^3/hr (647 cfm)
13 (1)			4200 m^3/hr (2472 cfm)	1300 m^3/hr (765 cfm)

(1) The Frame 13 690V AFE has only normal duty operation at nominal rated power and maximum ambient temperature at 35 °C (95 °F).

(2) For an AFE in the IP20 2500 MCC Style enclosure, this air means surrounding the outside of the enclosure.

Minimum Mounting Clearances

Figure 10 - Frame 10 in IP20 2500 MCC Style Enclosure

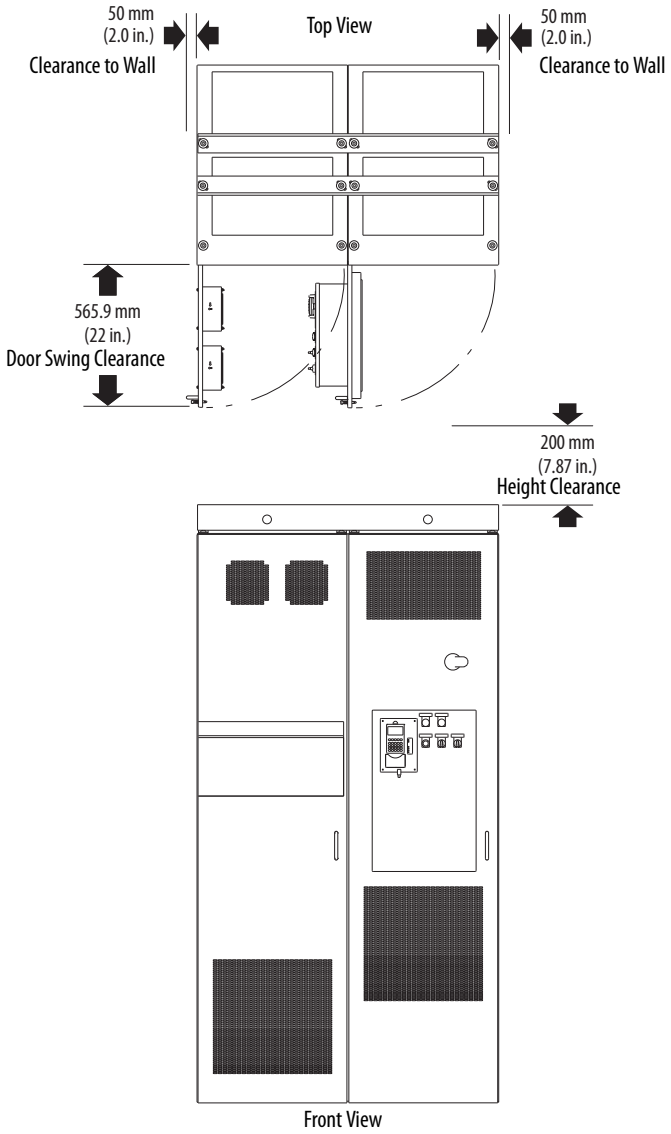

Figure 11 - Frame 13 in IP20 2500 MCC Style Enclosure

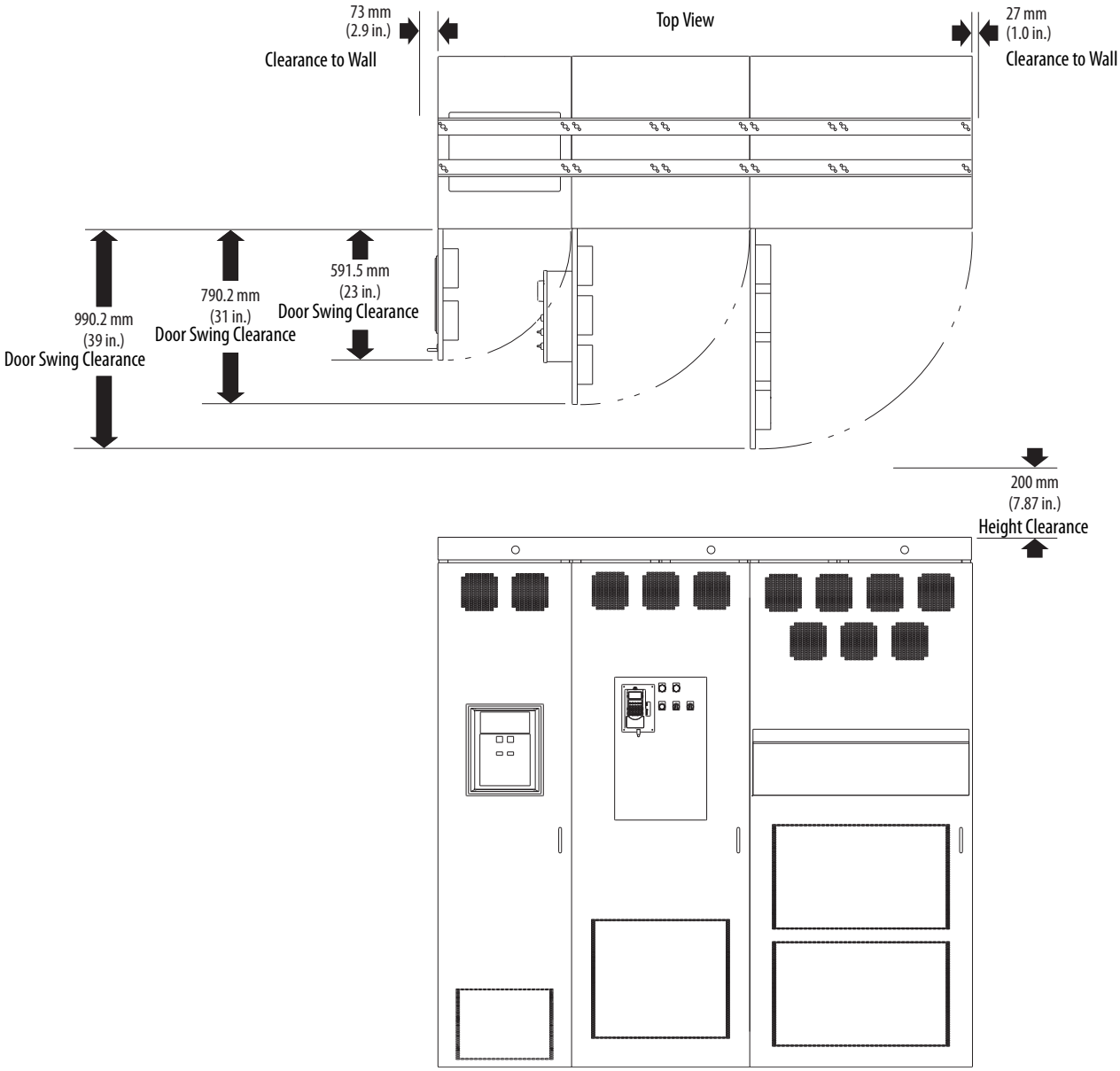

AC Supply Source Considerations

The AFE Frame 10 or Frame 13 in an IP20 2500 MCC Style enclosure is suitable for use on a circuit capable of delivering these ratings:

- 100,000 rms symmetrical amperes at 400/480V
- 65,000 rms symmetrical amperes at 600/690V

The AFE must not be used on undersized or high-impedance supply systems. The supply system kVA must be equal to or greater than the drive-related kW, and the system impedance must be less than 10%. Operation outside these limits can cause instability that results in the shutdown of the AFE.

System Impedance = (PowerFlex 700AFE kVA ÷ Transformer kVA) x Transformer % Impedance

You must consider the kVA of all PowerFlex AFEs on the distribution system and the system impedance of upstream transformers.

ATTENTION: To guard against personal injury and equipment damage that is caused by improper fusing or circuit breaker selection, use only the recommended line fuses or circuit breakers that are specified in Appendix A.

If a residual current detector (RCD) is used as a system ground fault monitor, use only Type B (adjustable) devices to avoid nuisance tripping.

Unbalanced, Ungrounded, or Resistive Grounded Distribution Systems

If phase-to-ground voltage exceeds 125% of normal, or the supply system is ungrounded, see Wiring and Grounding Guidelines for Pulse Width Modulated (PWM) AC Drives, publication DRIVES-IN001, for more information.

ATTENTION: The PowerFlex Active Front End is not designed to be used on IT (insulated tera) or corner-grounded power networks above 600V (phase-to-phase voltage). Operation on such a network can cause a hazardous failure of the insulation system of the AFE.

ATTENTION: The LCL filter of the PowerFlex Active Front End contains common mode capacitors that are referenced to ground. These devices **must be disconnected** if the AFE is installed on a resistive grounded distribution system or an ungrounded distribution system. See Figure 20 on page 38 or Figure 21 on page 39 for jumper locations.

Input Power Conditioning

These events on the power system that supplies an AFE can cause component damage or shortened product life:

- The power system has power factor correction capacitors that are switched in and out of the system, either by you or by the power company.
- The power source has intermittent voltage spikes in excess of 6000 volts. These spikes can be caused by other equipment on the line or by events such as lightning strikes.
- The power source has frequent interruptions.

Grounding Requirements

The Active Front End safety ground-PE must be connected to system ground. Ground impedance must conform to the requirements of national and local industrial safety regulations and electrical codes. Periodically check the integrity of all ground connections.

Recommended Grounding Scheme

For installations in which the AFE is within an enclosure, use one safety ground point or ground bus bar connected directly to building steel. All circuits including the AC input ground conductor must be grounded independently and directly to this point or ground bus bar.

Figure 12 - Typical Grounding Example for AFE Frame 10 in IP20 2500 MCC Style Enclosure

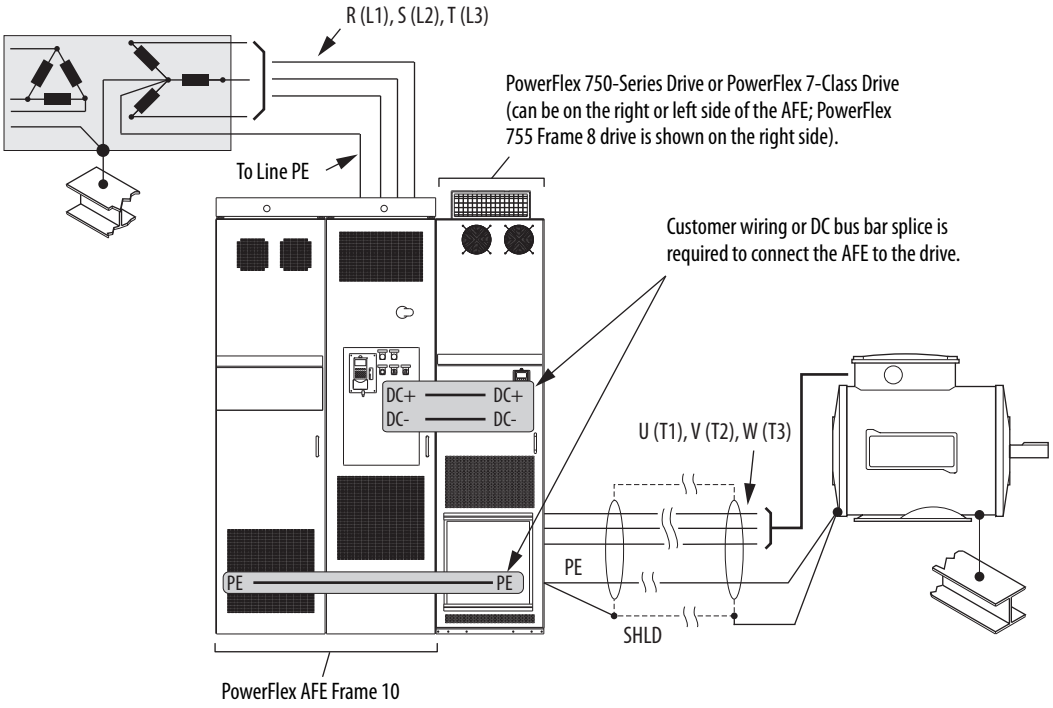

Figure 13 - Typical Grounding Example for AFE Frame 13 in IP20 2500 MCC Style Enclosure

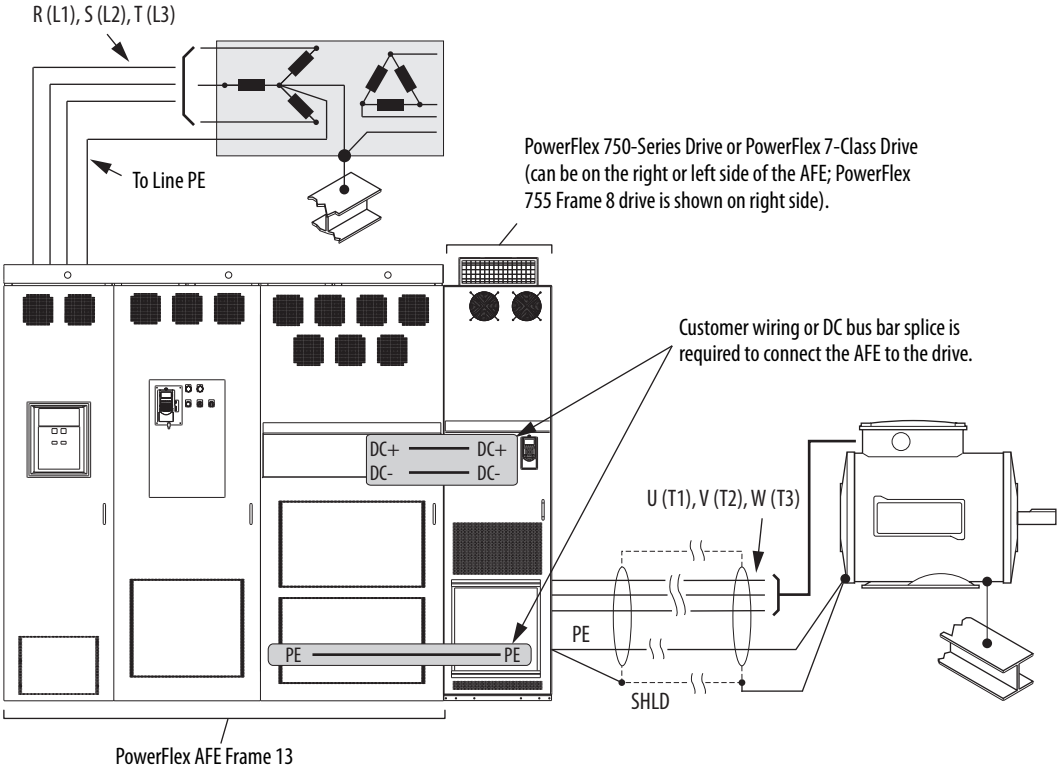

Safety Ground - PE and Shield Termination - SHLD

This ground is the safety ground for the AFE that code requires. This point must be connected to adjacent building steel (girder or joist), a floor ground rod, or bus bar (see Figure 13). Grounding points must comply with national and local industrial safety regulations and/or electrical codes.

The Shield terminal (Figure 16 or Figure 17) provides a grounding point for the AFE cable shield. It must be connected to an earth ground by a separate continuous lead. The drive cable shield must be connected to this terminal on the AFE end and the drive frame on the drive end. Use a shield terminating or EMI clamp to connect the shield to this terminal.

Fuses and Circuit Breakers

The IP20 2500 MCC Style enclosure for the AFE includes AC input fuses, input circuit breaker (Q0), an input contactor (K1), and DC bus output fusing. The contactor is used for precharge operation. For details on precharge operation, see page 47. For fuse and circuit breaker information, see Appendix A. Local and national electrical codes can determine additional requirements for the installations.

Power Wiring

Most start-up difficulties are the result of incorrect wiring. Verify that the wiring is done as instructed. Read and understand the instructions before you begin to installation the AFE.

ATTENTION: The following information is a guide for proper installation. Rockwell Automation does not assume responsibility for the compliance or noncompliance to any code, national, local, or otherwise, for the proper installation of this unit or associated equipment. A risk of personal injury and/or equipment damage exists if codes are ignored during installation.

Power Cable Types Acceptable for 400…690 Volt Installations

ATTENTION: National Codes and standards (NEC, VDE, CSA, BSI, and so forth) and local codes outline provisions for safely installing electrical equipment. Installation must comply with specifications regarding wire types, conductor sizes, branch circuit protection, and disconnect devices. Failure to do so can result in personal injury and/or equipment damage.

Various cable types are acceptable for PowerFlex Active Front End installations. For many installations, unshielded cable is adequate, provided it can be separated from sensitive circuits. As an approximate guide, use a spacing of 0.3 meters (1 ft) for every 10 meters (32.8 ft) of length. In all cases, avoid long parallel runs. Do not use cable with an insulation thickness less than or equal to 15 mils (0.4mm/0.015 in.). Use only copper wire. Wire gauge requirements

and recommendations are based on 7 5°C (167 °F). Do not reduce wire gauge when using higher temperature wire.

Unshielded Cable

THHN, THWN, or similar wire is acceptable for PowerFlex Active Front End installation in dry environments provided adequate free air space and/or conduit fill rate limits are provided. **Do not use THHN or similarly coated wire in wet areas**. Any wire that is chosen must have a minimum insulation thickness of 15 mils and cannot have large variations in insulation concentricity.

Shielded Cable

Shielded cable contains the general benefits of multi-conductor cable with the added benefit of a copper braided shield. The shield can contain much of the noise that is generated by a typical AC drive. Shielded cable is recommended in installations with sensitive equipment such as weigh scales, capacitive proximity switches, and other devices affected by electrical noise in the distribution system.

Applications with large numbers of drives in a similar location, imposed EMC regulations, or a high degree of communication and networking are also good candidates for shielded cable.

Consider the general specifications that are dictated by the environment of the installation, including temperature, flexibility, moisture characteristics, and chemical resistance. Also, include a braided shield that is specified by the manufacturer as having coverage of at least 75%. An additional foil shield can improve noise containment.

A good example of recommended cable is Belden 29528 - 29532 (AWG-1 through AWG-410). This cable has three XLPE insulated conductors plus ground with a spiral copper shield that is surrounded by a PVC jacket.

Armored Cable

Cable with continuous aluminum armor is often recommended in drive system applications or specific industries. It offers most of the advantages of standard shielded cable and also combines considerable mechanical strength and resistance to moisture. It can be installed in concealed and exposed manners, and removes the requirement for conduit (EMT) in the installation. It can also be directly buried or embedded in concrete.

Because noise containment is affected by incidental grounding of the armor to building steel when the cable is mounted, we recommend that the armored cable has an overall PVC jacket. See Chapter 2, ‘Wire Types’ in Wiring and

Grounding Guidelines for Pulse Width Modulated (PWM) AC Drives, publication DRIVES-IN001.

Interlocked armor is acceptable for shorter cable runs, but continuous welded armor is preferred.

Best performance is achieved with three spaced ground conductors, but acceptable performance below 200 Hp is provided by use of one ground conductor.

Recommended shielded/armored wire is listed in Table 1.

Table 1 - Recommended Shielded/Armored Wire for AFE in IP20 2500 MCC Style Enclosure

Location	Rating/Type	Description
Standard (option 1)	1000V, 90 °C (194 °F) XHHW2/RHW-2 Anixter B29528-B29532 Belden 29528-29532 Or equivalent	• Four tinned copper conductors with XLPE insulation. • Copper braid/aluminum foil combination shield and tinned copper drain wire. • PVC jacket.
Standard (option 2)	Tray rated 1000V, 90 °C (194 °F) RHH/RHW-2 Anixter OLFLEX-76*xxx*03 Or equivalent	• Three tinned copper conductors with XLPE insulation. • Corrugated copper tape with three bare copper grounds in contact with shield. • PVC jacket.
Class I & II; Division I & II	Tray rated 1000V, 90 °C (194 °F) RHH/RHW-2 Anixter 7VFD-*xxxx* Or equivalent	• Three bare copper conductors with XLPE insulation and impervious corrugated continuously welded aluminum armor. • Black sunlight resistant PVC jacket overall. • Three copper grounds.

Cable Trays and Conduit

ATTENTION: To avoid a possible shock hazard that is caused by induced voltages, unused wires in the conduit must be grounded at both ends. For the same reason, if a drive that shares a conduit is being serviced or installed, all drives that use this conduit must be disabled. Disable the drives to help minimize the possible shock hazard from 'cross coupled' motor leads.

If cable trays or large conduits are used, see the guidelines in Wiring and Grounding Guidelines for Pulse Width Modulated (PWM) AC Drives, publication DRIVES-IN001.

Select and Verify Control Transformer Voltage

The control transformer in the AFE is used to match the input AC line voltage of the AFE in an IP20 2500 MCC Style enclosure to the 230V and 120V control voltage.

Verify that the control voltage is set appropriately for the supplied AC line voltage. If necessary, use this procedure to change the control voltage.

1. Locate the X3 terminal block (Figure 14).

Figure 14 - X3 Terminal Block Location for AFE in IP20 2500 MCC Style Enclosure

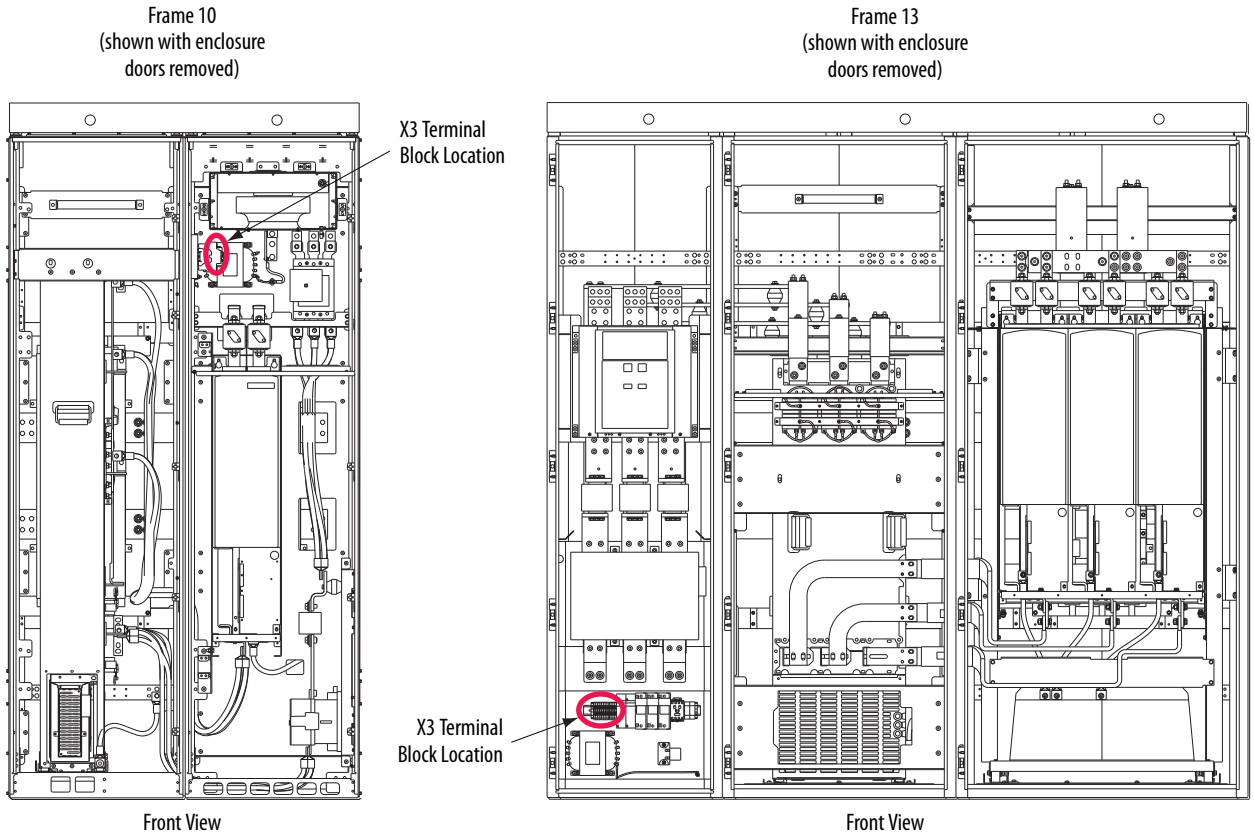

2. To match the AC line voltage, move the wire that is shown in Figure 15 to the appropriate X3 terminal.

Figure 15 - Input Voltage Setting for Control Voltage on Frames 10 and 13 in IP20 2500 MCC Style Enclosure

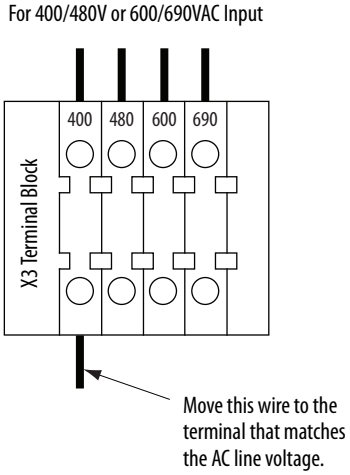

Power Terminals for AFE in IP20 2500 MCC Style Enclosure

Figure 16 and Figure 17 show the power terminal locations and specifications for AFE Frames 10 and 13 in an IP20 2500 MCC Style enclosure.

Figure 16 - AFE Frame 10 Power Terminal Locations in IP20 2500 MCC Style Enclosure

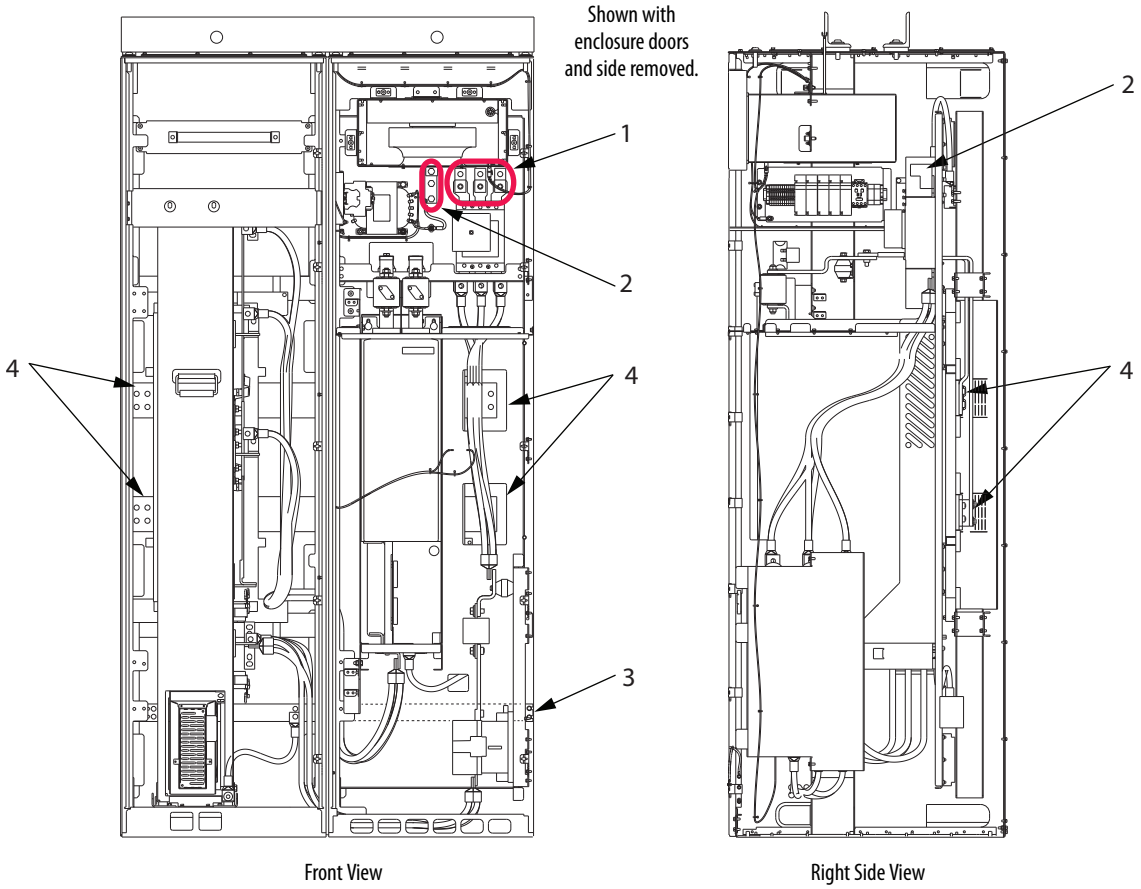

Table 2 - AFE Frame 10 Power Terminal Specifications in IP20 2500 MCC Style Enclosure

Item	Name	Frame	Description	Wire Size Range (1) (2)		Torque	Terminal Bolt Size (3) (4)
				Max	Min	Recommended	
1	Input power terminals L1, L2, L3 (1)	10	Input power	240 mm^2 (500 MCM)	95 mm^2 (3/0 AWG)	40 N•m (354 lb•in)	N/A
2	SHLD terminal, line PE, ground (3)	10	Terminating point for wiring shields	300 mm^2 (600 MCM)	2.1 mm^2 (14 AWG)	40 N•m (354 lb•in)	M5-M10
3	SHLD terminal, motor PE, ground (3)						
4	DC bus (3) (DC–, DC+)	10	DC output (using cable)	240 mm^2 (500 MCM)	2.1 mm^2 (14 AWG)	70 N•m (620 lb•in)	M12
			DC output (using splice kit SK-Y1-BUSSPLICE-F10)	—	—	40 N•m (354 lb•in)	M10

(1) Maximum/minimum sizes that the terminals can accept. These sizes are not recommendations.
(2) Do **not** exceed maximum wire size. Parallel connections can be required.
(3) These connections are bus bar type terminations and require the use of lug type connectors.
(4) Apply counter-torque to the nut on the other side of terminations when tightening or loosening the terminal bolt to avoid damage to the terminal.

Figure 17 - AFE Frame 13 Power Terminal Locations in IP20 2500 MCC Style Enclosure

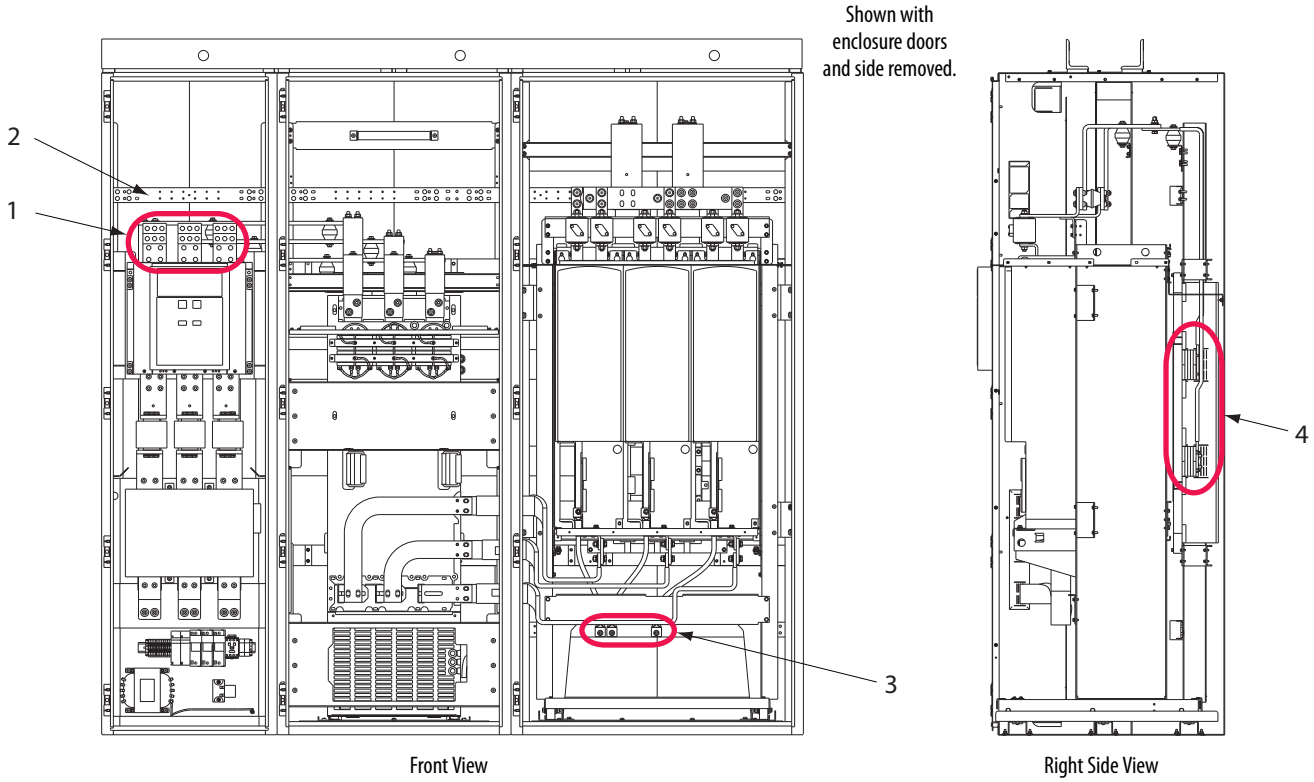

Table 3 - AFE Frame 13 Power Terminal Specifications in IP20 2500 MCC Style Enclosure

Item	Name	Frame	Description	Wire Size Range (1) (2)		Torque	Terminal Bolt Size (3) (4)
				Max	Min	Recommended	
1	Input power terminals L1, L2, L3 (1)	13	Input power	380 mm^2 (750 MCM)	53 mm^2 (1/0 AWG)	50 N•m (442 lb•in)	N/A
2	SHLD terminal, line PE, ground (3)	13	Terminating point for wiring shields	300 mm^2 (600 MCM)	2.1 mm^2 (14 AWG)	40 N•m (354 lb•in)	M5-M10
3	SHLD terminal, motor PE, ground (3)						
4	DC bus (3) (DC–, DC+)	13	DC output (using cable)	380 mm^2 (750 MCM)	2.1 mm^2 (14 AWG)	70 N•m (620 lb•in)	M12
			DC output (using right-side splice kit SK-Y1-BUSSPLICE-F13R)	—	—	40 N•m (354 lb•in)	M10
			DC output (using left-side splice kit SK-Y1-BUSSPLICE-F13L)	—	—		

(1) Maximum/minimum sizes that the terminals can accept. These sizes are not recommendations.
(2) Do **not** exceed maximum wire size. Parallel connections can be required.
(3) These connections are bus bar type terminations and require the use of lug type connectors.
(4) Apply counter-torque to the nut on the other side of terminations when tightening or loosening the terminal bolt to avoid damage to the terminal.

Route the AC Input, Ground (PE), and DC Bus Output Wiring for AFE in IP20 2500 MCC Style Enclosure

ATTENTION: To minimize disruption of airflow through the enclosure and avoid overheating within the AFE enclosure, remove only the minimum area that is needed to route the power cables.

When you remove any of the five side cover-plates (shaded areas that are shown in Figure 18) for routing the AC input, ground (PE), and DC bus output wiring, always use the barrier kit, catalog number SK-Y1-MCCBARRIER, to maintain airflow integrity through the enclosure.

When you remove sections for routing in other areas, airflow is disrupted throughout the enclosure, and causes overheating.

Frame 10

The AC input and ground (PE) wiring for the IP20 2500 MCC Style enclosure must be routed through the top of the enclosure.

The DC bus output can be routed through either the left or right side of the enclosure (see shaded areas in Figure 18).

Figure 18 - Routing Areas for AC Input, Ground, and DC Bus Output Wiring for AFE Frame 10 in IP20 2500 MCC Style Enclosure

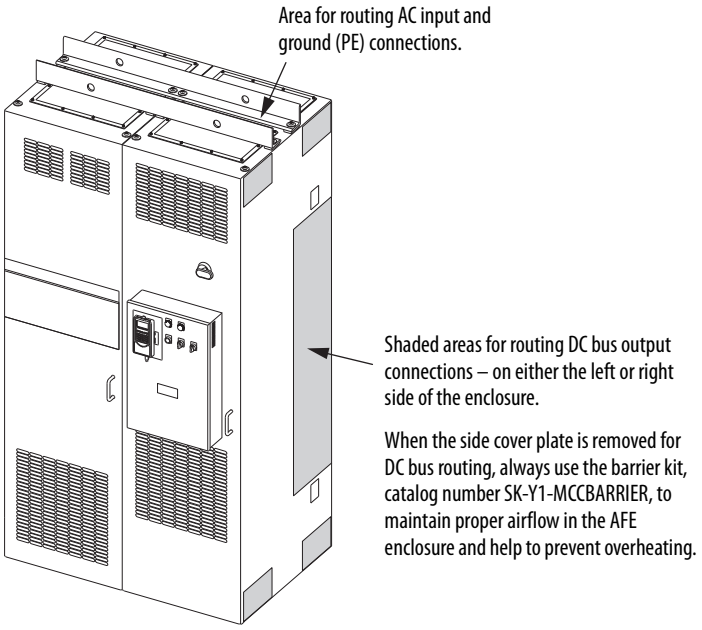

Frame 13

The AC input and ground (PE) wiring for the IP20 2500 MCC Style enclosure must be routed through the top of the enclosure.

The DC bus output can be routed through either the left or right side of the enclosure (see shaded area in Figure 19).

Figure 19 - Routing Areas for AC Input, Ground, and DC Bus Output Wiring for AFE Frame 13 in IP20 2500 MCC Style Enclosure

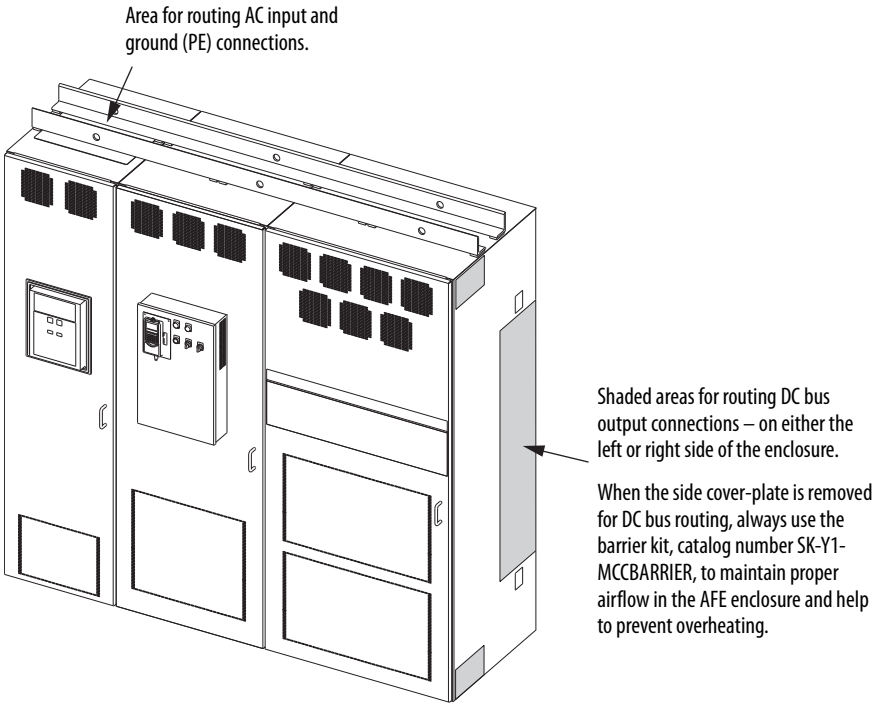

Disconnect the Common Mode Capacitors

Frame 10 LCL Filter

The Frame 10 AFE LCL filter contains common mode capacitors that are referenced to ground. To guard against AFE damage, disconnect these devices if the AFE is installed in either of these systems:

- A high-resistance grounded distribution system
- An ungrounded distribution system where the line-to-ground voltages on any phase exceed 125% of the nominal line-to-line voltage.

To access the common mode capacitors, the LCL filter must be removed from the enclosure. To remove the Frame 10 AFE LCL filter from the IP20 2500 MCC Style enclosure, see the instructions in the PowerFlex Active Front End—Frame 10 Hardware Service Manual, publication 20Y-TG001.

ATTENTION: To avoid an electric shock hazard, verify that the voltage on the bus capacitors has discharged completely before you remove or install any jumpers. Check the DC bus voltage between the +DC and –DC terminals, between the +DC terminal and the chassis, and between the –DC terminal and the chassis. The voltage must be zero for all three measurements.

To disconnect the common mode capacitors, remove the jumpers that are shown in Figure 20. For more information on ungrounded system installation, see Wiring and Grounding Guidelines for Pulse Width Modulated (PWM) AC Drives, publication DRIVES-IN001.

Figure 20 - AFE Frame 10 LCL Filter Common Mode Capacitor Jumper Locations

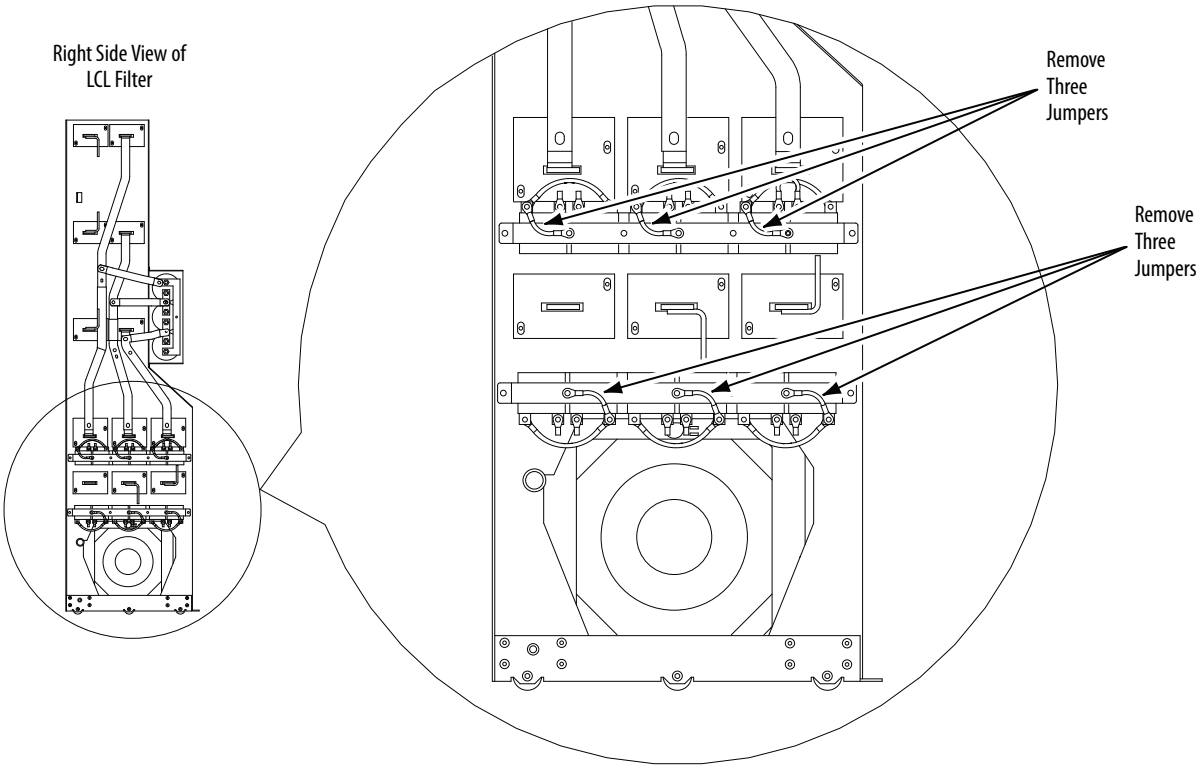

Frame 13 LCL Filter

The Frame 13 AFE LCL filter contains common mode capacitors that are referenced to ground. To guard against AFE damage, disconnect these devices if the AFE is installed in either of these systems:

- A high-resistance grounded distribution system
- An ungrounded distribution system where the line-to-ground voltages on any phase exceed 125% of the nominal line-to-line voltage.

To remove the AFE Frame 13 LCL filter from the IP20 2500 MCC Style enclosure, see the instructions in the PowerFlex Active Front End—Frame 13 Hardware Service Manual, publication 20Y-TG002.

ATTENTION: To avoid an electric shock hazard, verify that the voltage on the bus capacitors has discharged completely before you remove or install any jumpers. Check the DC bus voltage between the +DC and –DC terminals, between the +DC terminal and the chassis, and between the –DC terminal and the chassis. The voltage must be zero for all three measurements.

To disconnect the common mode capacitors, remove the upper guard and then remove the jumpers that are shown in Figure 21. For more information on ungrounded system installation, see Wiring and Grounding Guidelines for Pulse Width Modulated (PWM) AC Drives, publication DRIVES-IN001.

Figure 21 - AFE Frame 13 LCL Filter Common Mode Capacitor Jumper Locations

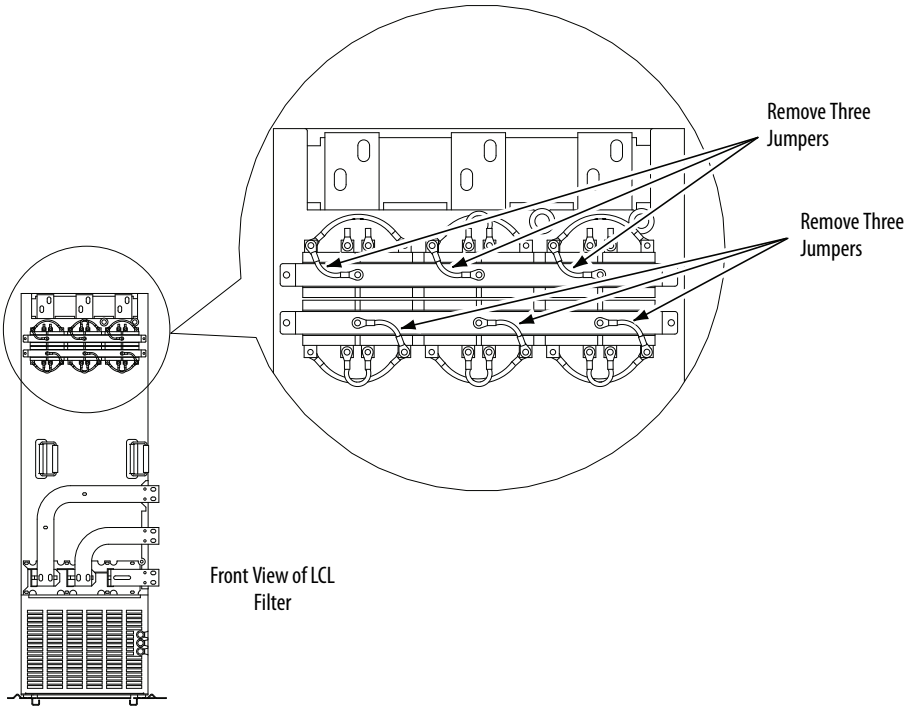

Frame 10 or Frame 13 Power Structure

IMPORTANT The Frame 10 or Frame 13 AFE in an IP20 2500 MCC Style enclosure is shipped from the factory with the common mode capacitors removed. You do not need to remove the capacitors. However, when you replace a power structure, **you must remove the common mode capacitors in the new power structure** before installation. See Frame 10 Power Structure on page 72 or Frame 13 Power Structure on page 73 for instructions.

Use the AFE with PowerFlex Drives

When the Active Front End is used with drives that have common mode capacitors (for example, PowerFlex 7-Class or PowerFlex 750-Series drives), the common mode capacitors of these drives **must be disconnected**. See the documentation for the respective drives.

When supplying power to PowerFlex drives of different frame sizes on the same DC bus, additional bus capacitance can be needed. For details, see Drives in Common Bus Configurations, publication DRIVES-AT002.

Control Wiring

The AFE in an IP20 2500 MCC Style enclosure is wired at the factory and programmed to operate from the operator switches on the front of the enclosure. See Table 7 and Figure 23 for I/O terminal designations. If customized (or remote) control is required, then you must change the control wiring and correspondent digital I/O parameter setting.

Here are some important points to remember about I/O wiring:

- Always use copper wire.
- Wire with an insulation rating of 600V or greater is recommended.
- Control and signal wires must be separated from power wires by at least 0.3 meters (1 foot).
- When it is unavoidable to cross control and signal wires with power wires, always cross power wires at a 90° angle.

IMPORTANT I/O terminals that are labeled '(–)' or 'Common' are not referenced to earth ground. They are designed to reduce common mode interference. Grounding these terminals can cause signal noise.

ATTENTION: Inputs must be configured with software and jumpers (see Analog I/O Configuration on page 46). If you configure an analog input for 0…20 mA operation and drive it from a voltage source, you can cause component damage. Verify proper configuration before you apply input signals.

ATTENTION: It is important to disable the variable frequency drives that are connected to the AFE output when the AFE is not active (not modulating). Connect the 'Inverter Enable' output of the AFE to each variable frequency drive enable input, or enable parameter 132 [Contact Off Cnfg] to force off the main contactor if there is a fault. This action makes sure that once the AFE stops modulating, there is no motoring current flowing through the AFE IGBT diodes. Failure to disable the AFE output can result in component damage or a reduction in product life.

When you enable parameter 132, see page 109 for details. The AFE is shipped with parameter 132 disabled. The disabled parameter does not stop or shut down DC output when a fault occurs.

Signal and Control Wire Types

Table 4 - Recommended Signal Wire for AFE in IP20 2500 MCC Style Enclosure

Signal Type	Wire Types	Description	Minimum Insulation Rating
Analog I/O	Belden 8760/9460 (or equivalent)	0.5 mm^2 (22 AWG), twisted pair, 100% shield with drain (1)	300V, 75…90 °C (167…194 °F)
	Belden 8770 (or equivalent)	0.5 mm^2 (22 AWG), 3-conductor, shielded for remote pot only	
EMC compliance	See CE Conformity on page 49 for details.		

(1) If the wires are short and contained within an enclosure that has no sensitive circuits, the use of shielded wire is not necessary, but is always recommended.

Table 5 - Recommended Control Wire for Digital I/O

Type	Wire Types	Description	Minimum Insulation Rating
Unshielded	Per US NEC or applicable national or local code	—	300V, 60 °C (140 °F)
Shielded	Multi-conductor shielded cable such as Belden 8770 (or equivalent)	0.5 mm^2 (22 AWG), 3-conductor, shielded	

Figure 22 - Door Control Box I/O Terminal Blocks and Jumpers

For jumper configurations, see Table 8 on page 46.

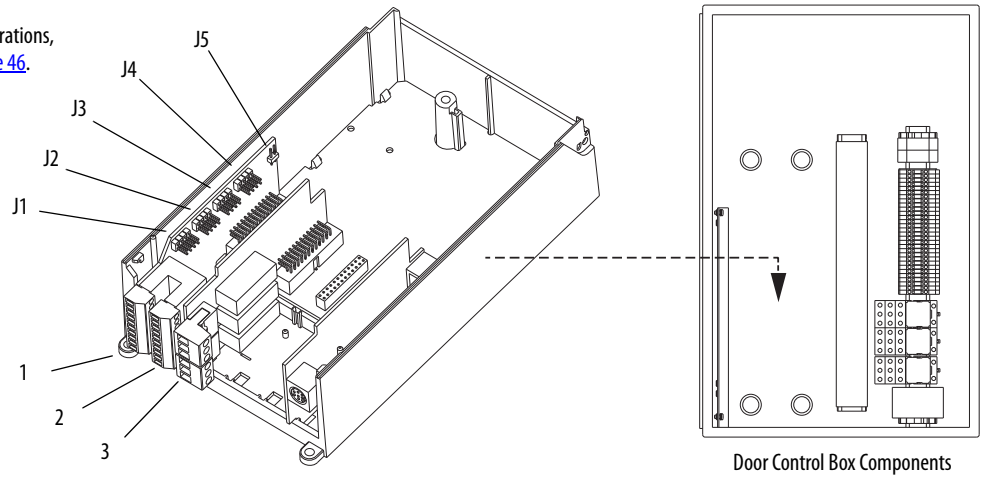

Components that are mounted on inside of AFE enclosure (see Figure 14 for location).

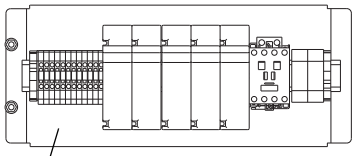

X3 Term. No.	Default	Description
57 and 60	—	Remote momentary pulse of 0.4…1.0 sec. across these terminals starts precharge in REM mode when terminals 58 and 61 are remotely closed.
58 and 61	—	These terminals must be remotely closed to start precharge. Opening these terminals opens the main contactor K1.
63 and 64	—	Remotely closing these terminals resets an AFE fault.
65 and 66	—	AFE run signal to the inverter enable input.
400 and 480	480	Control input voltage setting.
600 and 690	690	

See Table 6 for door-control box item number descriptions and specifications.

I/O Terminal Blocks

Table 6 - Door Control Box I/O Terminal Block Specifications for AFE in IP20 2500 MCC Style Enclosure

No.	Name	Description	Wire Size Range (1)		Torque	
			Max	Min	Max	Recommended
1	Analog I/O	Analog I/O signals	2.5 mm^2 (14 AWG)	0.5 mm^2 (22 AWG)	0.2 N•m 1.8 lb•in	0.2 N•m 1.8 lb•in
2	Digital inputs	Digital input signals	2.5 mm^2 (14 AWG)	0.5 mm^2 (22 AWG)	0.2 N•m 1.8 lb•n	0.2 N•m 1.8 lb•in
3	Digital outputs	Digital out relays	2.5 mm^2 (14 AWG)	0.5 mm^2 (22 AWG)	0.5 N•m 4.5 lb•in	0.5 N•m 4.5 lb•in
4	Control terminal	Customer input and output control	2.5 mm^2 (14 AWG)	0.5 mm^2 (22 AWG)	0.8 N•m 7.1 lb•in	0.8 N•m 7.1 lb•in

(1) Maximum/minimum that the terminal block can accept. These sizes are not recommendations.

I/O Cable Grounding

When installing shielded multi-conductor cable for analog and digital I/O, strip the cable from the terminal plug so you can fix it to the cable clamp for grounding.

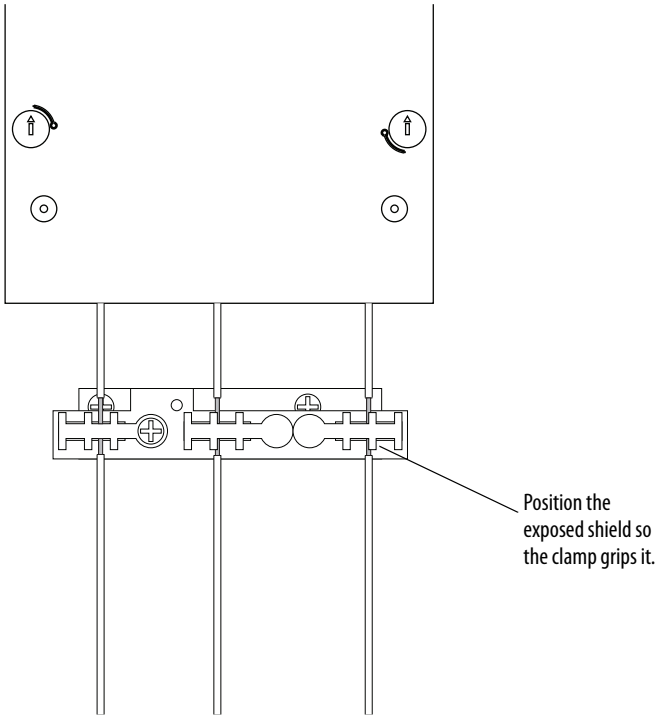

IMPORTANT: This clamp is not designed for strain relief.

ATTENTION: For the AFE in the IP20 2500 MCC Style enclosure, digital inputs 1, 3, 4, and 5, and digital outputs 1 and 2, are wired at the factory and programmed to operate from the controls on the front of the enclosure. Digital output 3 is programmable and factory-wired for +24V DC only. Do not change the wiring and programming for those digital inputs and outputs, or it results in malfunction of the system.

Table 7 - Door Control Box I/O Terminal Designations for AFE in IP20 2500 MCC Style Enclosure

	No.	Signal	Default Configuration	Description
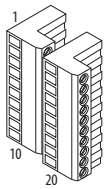	1	Analog In 1 (–) (1)	(2)	Isolated (3), bipolar, differential, 9-bit and sign, 88k Ω input impedance. A jumper (see Table 8) selects 0…10V, ±10V, or 4…20 mA. Default: 0…10V (Ri = 200k Ω), 4…20 mA (Ri = 100 ohm).
	2	Analog In 1 (+) (1)		
	3	Analog In 2 (–) (1)		
	4	Analog In 2 (+) (1)		
	5	–10V Pot Reference	—	2k Ω min, 10 mA max load, 1% accuracy
	6	Pot Common (GND)		For (+) and (–) 10V pot references
	7	+10V Pot Reference	—	2k Ω min, 10 mA max load, 1% accuracy
	8	Analog Out 1 (+)	(2)	Bipolar (current out is not bipolar), 9-bit and sign, 2k Ω min load. A jumper (see Table 8) selects 0…10V, ±10V, or 4…20 mA.
	9	Analog Out Common		
	10	Analog Out 2 (+)		
	11	Digital In 1	RunCmd	24V DC - Opto isolated (250V) Low state: less than 5V DC High state: greater than 20V DC, 11.2 mA DC Enable: digital input 6 is jumper selectable for HW Enable. On-time: < 16.7 ms, Off-Time < 1 ms
	12	Digital In 2	Ext. Reset	
	13	Digital In 3	Enable Mcont	
	14	Digital In 4	Contactor Ack	
	15	Digital In 5	LCL Temp	
	16	Digital In 6/Hardware Enable, see page 46		
	17 18	Digital In Common		Allows source or sink operation
	19	+24V DC (4)	—	Unit supplied logic input power
	20	24V Common (4)	—	Common for internal power supply
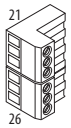	21	Digital Out 1 – N.C. (5)	Contact Ctrl	Max Resistive Load: 240V AC/30V DC – 1200VA, 150 W Max current: 5 A, Min Load: 10 mA Max. Inductive Load: 240V AC/30V DC – 840VA, 105 W Max current: 3.5 A, Min Load: 10 mA **IMPORTANT:** See the Attention above this table for more details.
	22	Digital Out 1 Common		
	23	Digital Out 1 – N.O. (5)		
	24	Digital Out 2 – N.C. (5)	Fault	
	25	Digital Out 2/3 Com.		
	26	Digital Out 3 – N.O. (5) (6)	Active	

(1) **Important:** Input must be configured with a jumper. AFE damage can occur if jumper is not installed properly. See Analog I/O Configuration on page 46.

(2) These inputs/outputs are dependent on a number of parameters.

(3) Differential Isolation - External source must be maintained at less than 160V regarding PE. Input provides high common mode immunity.

(4) 150 mA maximum load. Can be used to provide control power from an external 24V source when main power is not applied.

(5) Contacts in unpowered state. Any relay that is programmed as Fault or Alarm energizes (pick up) when power is applied to the AFE, and de-energizes (drop out) when a fault or alarm exists. Relays selected for other functions energize only when that condition exists and de-energizes when the condition is removed.

(6) These sizes are not recommendationsWhen this output is configured as active, it can be wired to the Enable input of the connected drives to prevent the AFE from supplying power when the AFE is not running.

Typical I/O Wiring

The IP20 2500 MCC Style enclosure for the AFE is wired at the factory and programmed to operate from the operator switches on the front of the enclosure. The AFE in the IP20 2500 MCC Style enclosure has an input contactor K1. The AFE is configured to run when precharge is complete, the contactor is closed, and no faults are present. Figure 23 shows the factory-installed wiring.

Figure 23 - Factory-installed Wiring Diagram for AFE in IP20 2500 MCC Style Enclosure

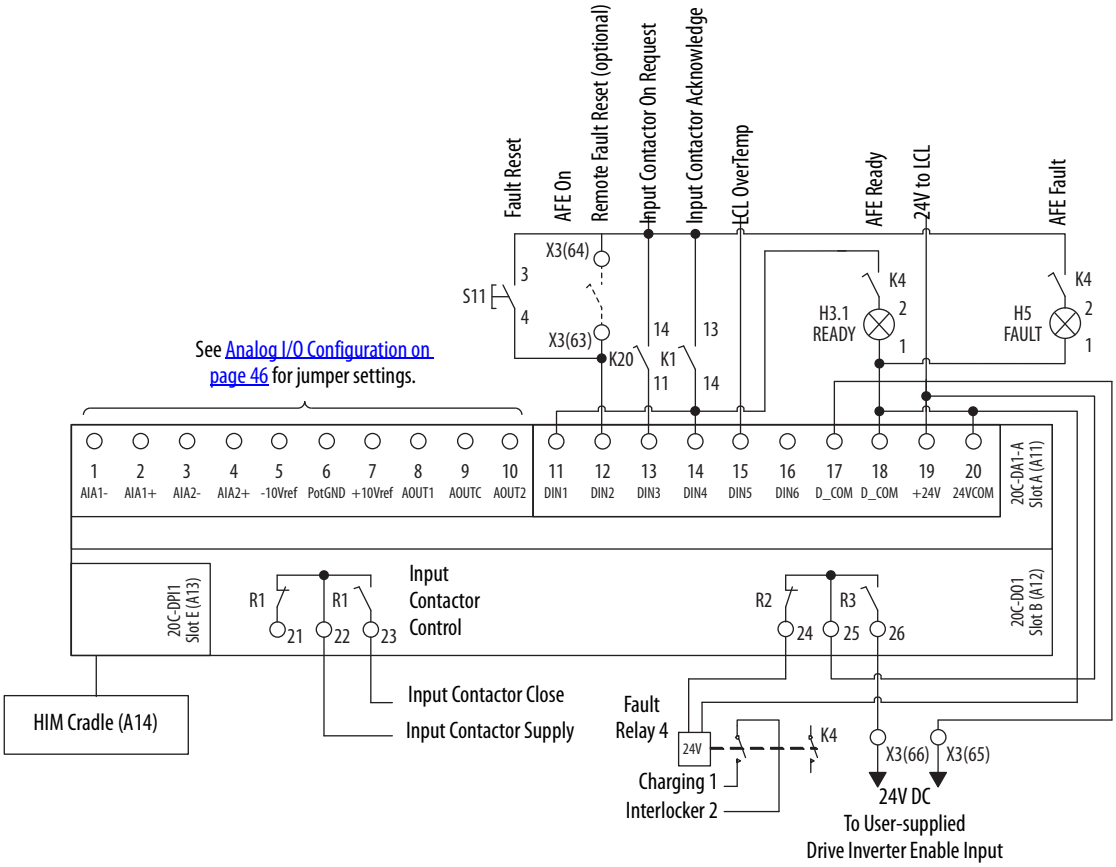

Analog I/O Configuration

IMPORTANT Analog I/O must be configured through programming, and the jumpers shown in Table 8. See Figure 22 for jumper locations and Table 8 for I/O jumper configurations.

Table 8 - I/O Configuration for AFE in IP20 2500 MCC Style Enclosure

Signal	Jumper	Setting		
Analog inputs	J1 (analog in 1) J2 (analog in 2)	0…20 mA	0…10V	±10V
		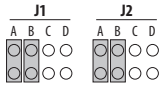	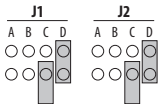	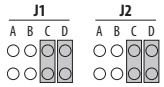
Analog outputs	J3 (analog out 1) J4 (analog out 2)	0…20 mA	0…10V	±10V
			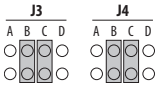	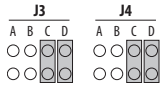

Hardware Enable Circuitry

ATTENTION: For the AFE in the IP20 2500 MCC Style enclosure, digital inputs 1, 3, 4, and 5, and digital outputs 1 and 2, are wired at the factory and programmed to operate from the controls on the front of the enclosure. Do not change the wiring and programming for those digital inputs and outputs, or it results in malfunction of the system.

You can program a digital input as an Enable input. The AFE software interprets the status of this input. If the application requires the AFE to be disabled without software interpretation, a dedicated hardware enable configuration can be used.

Remove jumper J5 (Figure 22) and wire the enable input to Digital In 6 (see Table 9). Verify that [Digital In6 Sel], parameter 226, is set to '1' (Enable).

Table 9 - Hardware Enable Configuration for AFE in IP20 2500 MCC Style Enclosure

Signal	Jumper	Setting	
Hardware Enable	J5	Hardware enable	Input programmable (no hardware enable)

Analog I/O Wiring Examples for AFE in IP20 2500 MCC Style Enclosure

Input/Output	Connection Example	Required Parameter Changes
Potentiometer unipolar DC volt reference 10k Ω Pot. recommended (2k Ω Min)	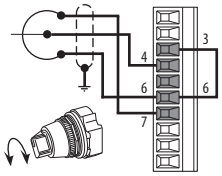	• Configure input for voltage: Parameter 200 and set appropriate jumper per Table 8. • Adjust scaling: Parameters 80/81 and 204/205 • View results: Parameter 018
Analog voltage input unipolar DC volt reference 0…10V input	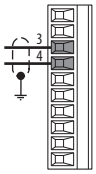	• Configure input for voltage: Parameter 200 and set appropriate jumper per Table 8. • Adjust scaling: Parameters 80/81 and 204/205 • View results: Parameter 018
Analog current input unipolar DC volt reference 4…20 mA input	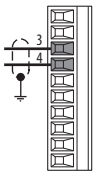	• Configure input for current: Parameter 200 and set appropriate jumper per Table 8. • Adjust scaling: Parameters 80/81 and 204/205 • View results: Parameter 018.
Analog output ±10V, 4…20 mA bipolar +10V unipolar (shown)	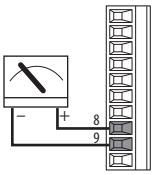	• Configure with Parameter 207 and set appropriate jumper per Table 8. • Select source value: Parameter 209 - [Analog Out1 Sel] • Adjust scaling: Parameters 210/211

Precharging the AFE

This section contains important information about AFE precharging.

Introduction

An AFE in the IP20 2500 MCC Style enclosure contains an internal precharging circuit. The precharging unit is used to charge the DC bus capacitors. The charging time depends on the capacitance of the intermediate circuit and the resistance of the charging resistors. Table 10 shows the technical specifications for the precharge in the AFE enclosure. For correct operation of the precharging circuit, verify that the input circuit breaker (Q0) is on, and the input contactor (K1) and precharging circuit contactor are controlled by the AFE.

Table 10 - Total DC Bus Capacitance Limits for Precharging Circuit of AFE in IP20 2500 MCC Style Enclosure

Frame Size	Resistance	Capacitance, min (1)	Capacitance, max (2)
10	2 x 25 Ω	9900 µF	70,000 µF
13	1 x 11 Ω (3 x 3.67 Ω)	29,700 µF	128,000 µF

(1) The minimum capacitance is built into the AFE.
(2) The maximum capacitance is the capacitance of the AFE plus the external capacitance.

ATTENTION: If the maximum capacitance is exceeded, component damage in AFE occurs.

Important Guidelines

Read and understand these guidelines:

- If drives **without** internal precharge are used and a disconnect is installed between the input of the drive and the DC bus, you must use an external precharge circuit between the disconnect and the DC input of the drive.
- If drives **with** internal precharge are used with a disconnect switch to the common bus, you must connect an auxiliary contact on the disconnect to a digital input of the drive. The corresponding input must be set to the 'Precharge Enable' option. This option provides the proper precharge interlock, guarding against possible damage to the drive when connected to a common DC bus.
- The precharge status of the AFE must be interlocked with the connected drives, such that the drives are disabled (not running) when the AFE is in a precharge state.

CE Conformity

Conformity with the Low Voltage (LV) Directive and Electromagnetic Compatibility (EMC) Directive has been demonstrated by using harmonized European Norm (EN) standards that are published in the Official Journal of the European Communities. PowerFlex Active Front End units comply with the EN standards listed here when installed according to this User Manual and the PowerFlex Drive Reference Manual.

Declarations of Conformity are available online at this link:

http://www.rockwellautomation.com/certification/overview.page

Low Voltage Directive (2006/95/EC)

EN61800-5-1 Adjustable speed electrical power drive systems Part 5-1: Safety requirements – Electrical, thermal and energy.

EMC Directive (2004/108/EC)

EN61800-3 Adjustable speed electrical power drive systems Part 3: EMC product standard including specific test methods.

General Notes

- The AFE can cause radio frequency interference if used in a residential or domestic environment. You are required to take measures to help prevent interference, and follow the essential requirements for CE compliance that is listed here, if necessary.
- Conformity of the AFE with CE EMC requirements does not guarantee an entire machine or installation complies with CE EMC requirements. Many factors can influence total machine/installation compliance.

Essential Requirements for CE Compliance

Conditions 1...6 listed here must be satisfied for the PowerFlex Active Front End to meet the requirements of EN61800-3.

1. Use a standard PowerFlex Active Front End CE-compatible unit.
2. Review important precautions and attention statements throughout this document before installing the Active Front End.
3. Grounding as described on page 27.

4. Control (I/O) and signal wiring must be braided, shielded cable with a coverage of 75% or better, metal conduit, or have shielding/cover with equivalent attenuation.
5. All shielded cables must terminate with proper shielded connector.
6. Motor cables of DC input drives that are used with the AFE must be shielded cable wire with a coverage of 75% or more, or must be inside metal conduit or have shielding/cover with equivalent attenuation.

AFE in IP21 Rittal Enclosure – Installation/ Wiring

This chapter provides information on how to install and wire the PowerFlex® Active Front End in an IP21 Rittal enclosure. For information on how to install and wire the AFE in an IP20 2500 MCC Style enclosure, see Chapter 1.

Topic	Page
Main Component Sections	52
Main Component Locations	54
Mounting Considerations	56
AC Supply Source Considerations	58
Grounding Requirements	59
Fuses and Circuit Breakers	62
Power Wiring	62
Disconnect the Common Mode Capacitors	69
Using the AFE with PowerFlex Drives	74
Control Wiring	74
Precharging the AFE	81
CE Conformity	82

Most start-up difficulties are the result of incorrect wiring. Verify that the wiring is done as instructed. Read and understand the instructions before you begin to installation the AFE.

ATTENTION: The following information is a guide for proper installation. Rockwell Automation does not assume responsibility for the compliance or the noncompliance to any code, national, local, or otherwise, for the proper installation of this 700AFE or associated equipment. A hazard of personal injury and/or equipment damage exists if codes are ignored during installation.

This section describes the main component sections and main component locations of AFE Frame 10 and Frame 13 systems in an IP21 Rittal enclosure.

Main Component Sections

This section describes the main component sections of AFE Frame 10 and Frame 13 systems in an IP21 Rittal enclosure.

Frame 10

Figure 24 shows a basic one-line diagram for an AFE Frame 10 in an IP21 Rittal enclosure. The main component sections consist of the following items:

- AC line switchgear consisting of the input disconnect (Q0) and MCCB motor-controlled circuit breaker (Q1)
- LCL filter (L1)
- Precharge circuit
- AFE power structure (U1) with AFE control assembly
- DC fuses (F2.1 and F2.2)

Figure 24 - Basic One-line Diagram for an AFE Frame 10 in IP21 Rittal Enclosure

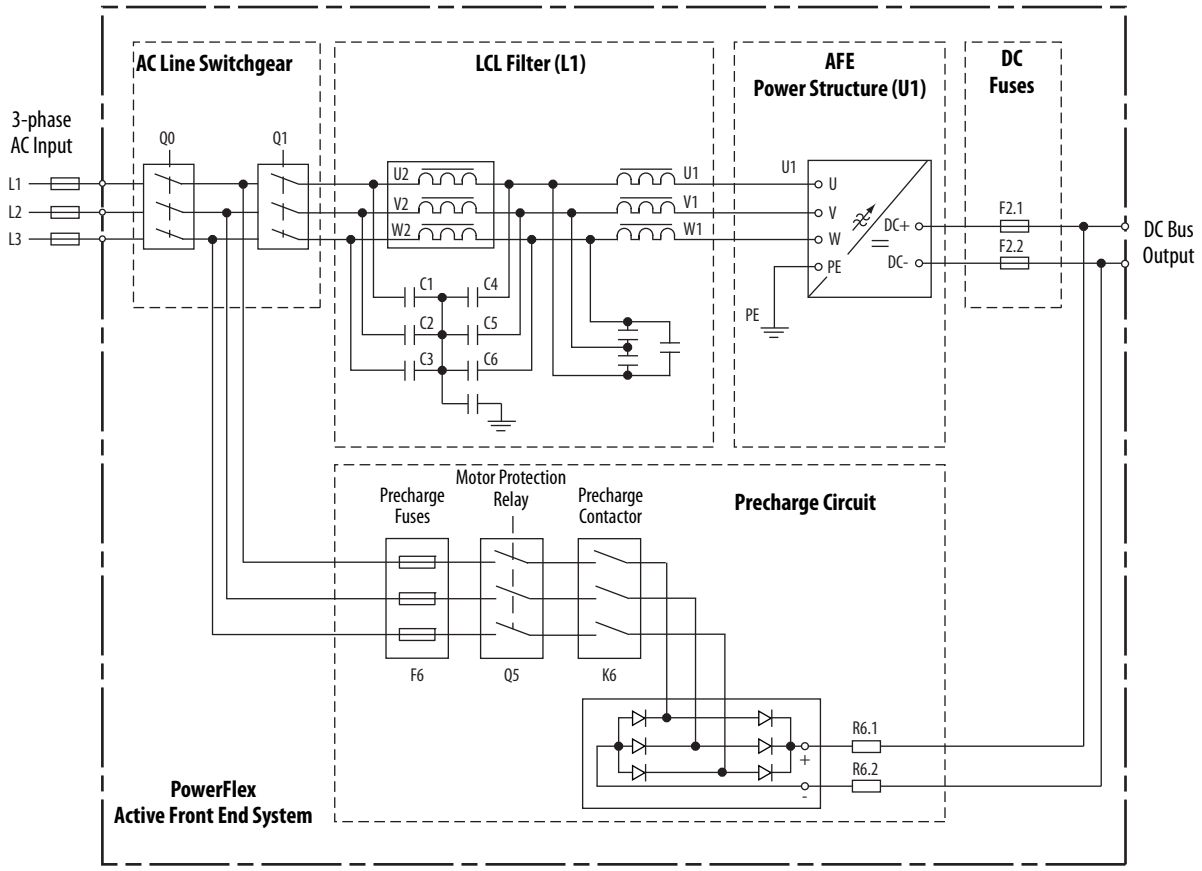

Frame 13

Figure 25 shows a basic one-line diagram for an AFE Frame 13 in an IP21 Rittal enclosure. The main component sections consist of the following items:

- AC line switchgear consisting of the input disconnect (Q0) and MCCB motor-controlled circuit breaker (Q1)
- LCL filter (L1)
- Precharge circuit
- AFE power structure (U1) with AFE control assembly
- DC fuses (F2.1...F2.6)

Figure 25 - Basic One-line Diagram for an AFE Frame 13 in IP21 Rittal Enclosure

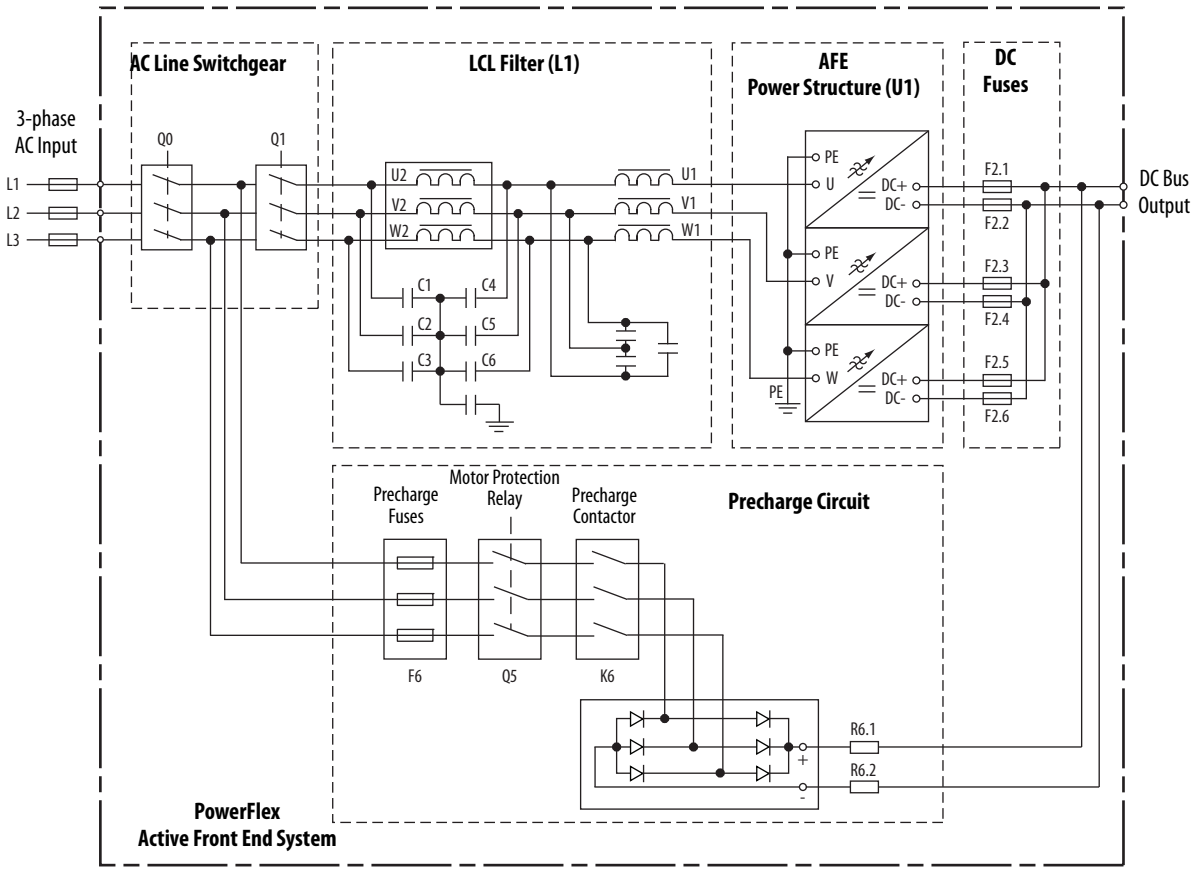

Main Component Locations

This section shows the main component locations for AFE Frame 10 and Frame 13 systems in an IP21 Rittal enclosure.

Frame 10

Figure 26 shows the main components of the AFE Frame 10 system in an IP21 Rittal enclosure.

Figure 26 - AFE Frame 10 Main Component Locations in IP21 Rittal Enclosure

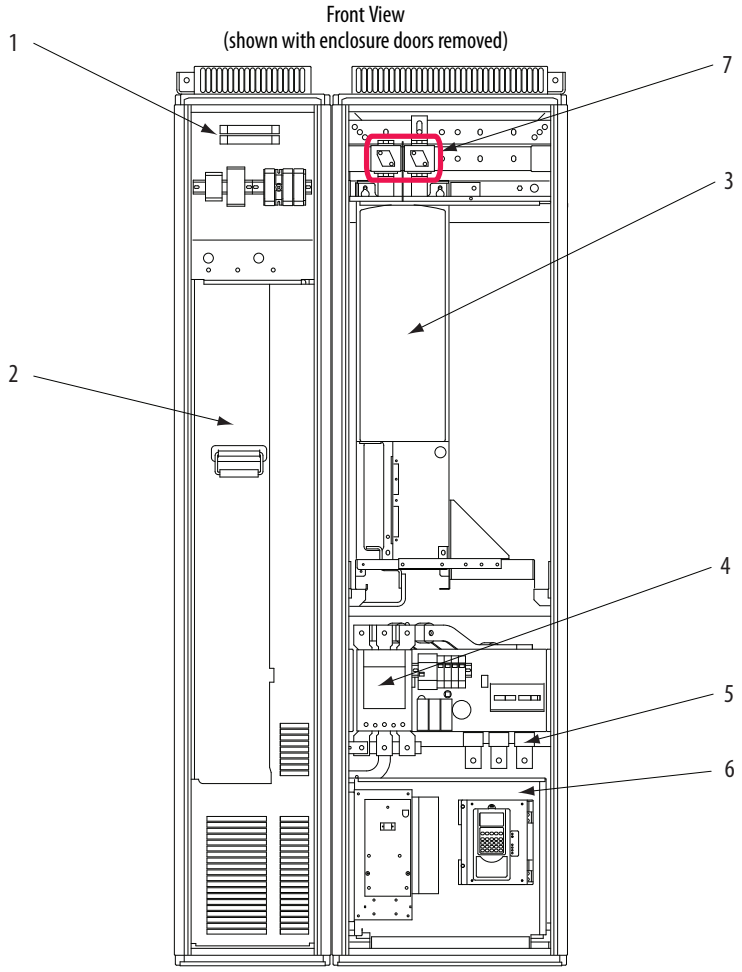

Item	Description	
1	Precharge circuit	
2	LCL filter (L1)	
3	Active Front End power structure (U1)	
4	AC line switchgear	Motor-controlled circuit breaker
5		Input disconnect
6	AFE control assembly (shown with user-installed HIM)	
7	DC fuses	

Frame 13

Figure 27 shows the main components of the AFE Frame 13 system in an IP21 Rittal enclosure.

Figure 27 - AFE Frame 13 Main Component Locations in IP21 Rittal Enclosure

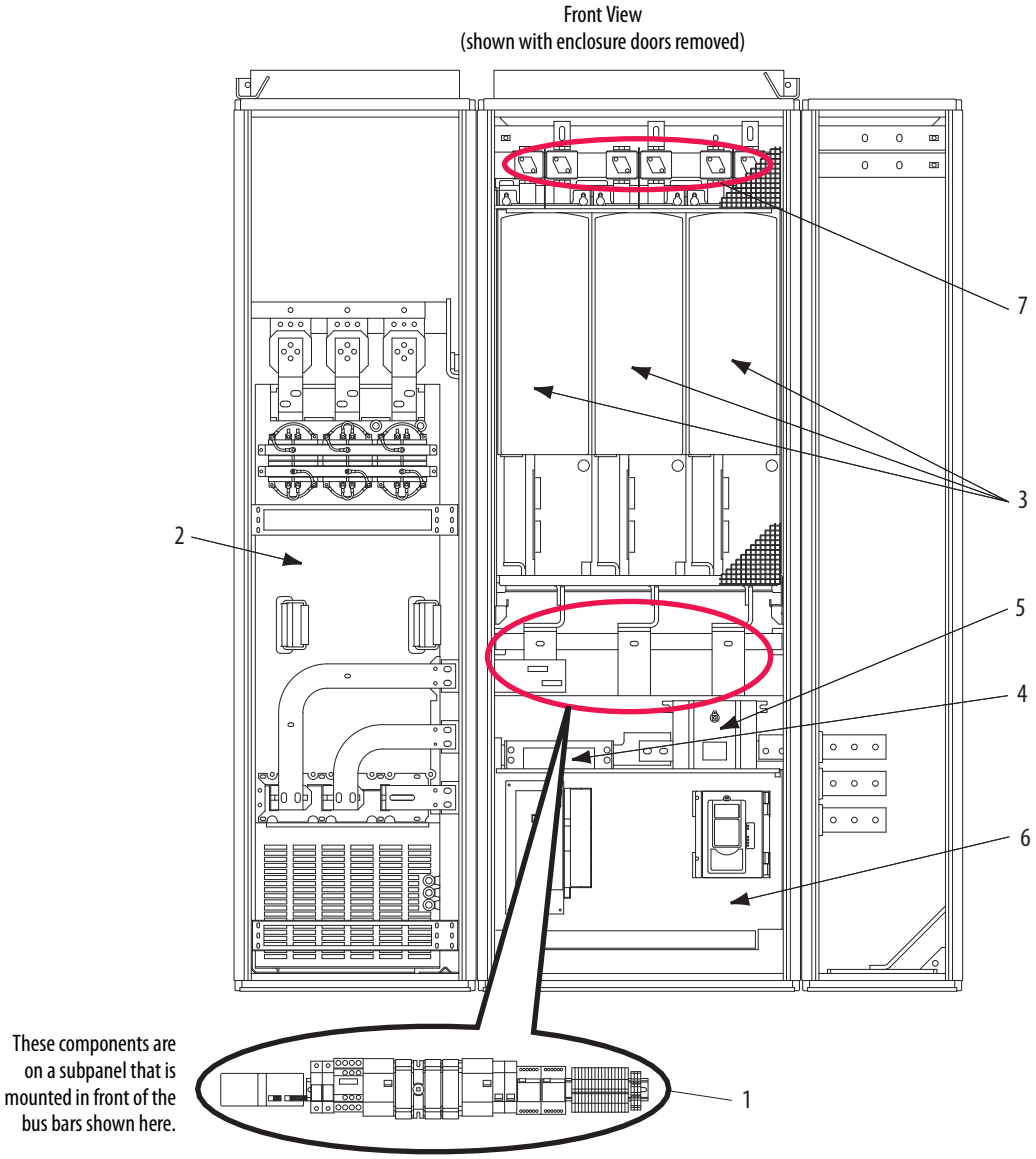

Item	Description	
1	Precharge circuit	
2	LCL filter (L1)	
3	Active Front End power structure (U1)	
4	AC line switchgear	Motor-controlled circuit breaker
5		Input disconnect
6	AFE control assembly (shown with user-installed HIM)	
7	DC fuses	

Mounting Considerations

When mounting the Active Front End, consider the following information.

Operating Temperatures

Frame Size	Surrounding Air Temperature (2)		Minimum Airflow	
	Normal Duty	Heavy Duty	Power Module	LCL Filter
10	0…40 °C (32…104 °F)	0…40 °C (32…104 °F)	1400 m^3/hr (824 cfm)	1100 m^3/hr (647 cfm)
13 (1)			4200 m^3/hr (2472 cfm)	1300 m^3/hr (765 cfm)

(1) The Frame 13 690V AFE has only normal duty operation at nominal rated power and maximum ambient temperature at 35 °C (95 °F).

(2) For an AFE in the IP21 Rittal enclosure, this means air surrounding the module.

Minimum Mounting Clearances

Figure 28 - Frame 10 in IP21 Rittal Enclosure

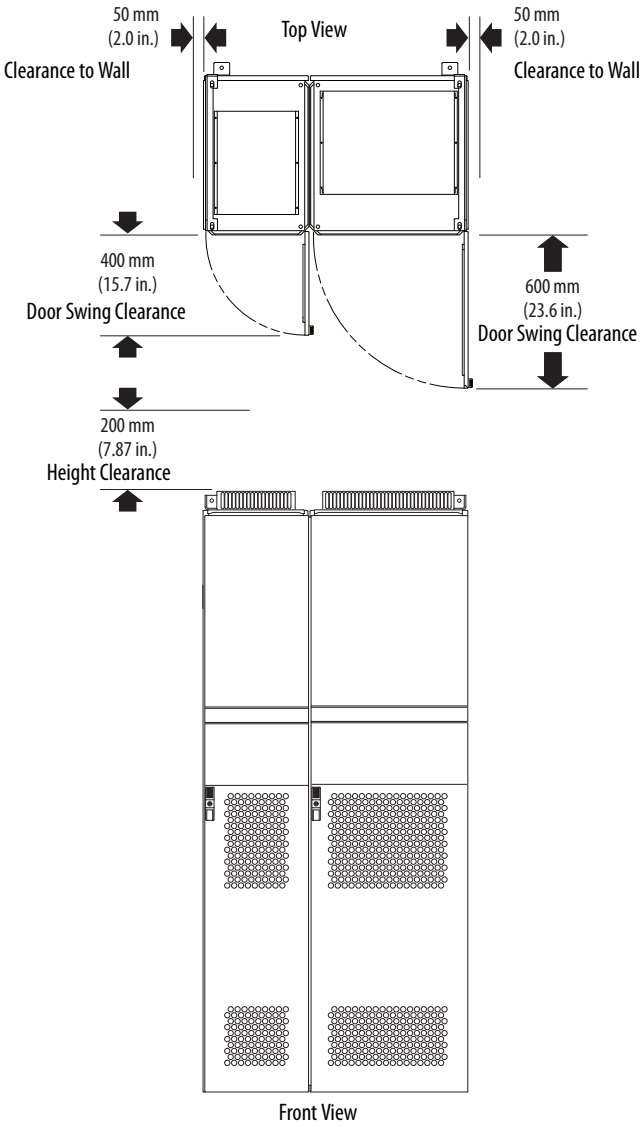

Figure 29 - Frame 13 in IP21 Rittal Enclosure

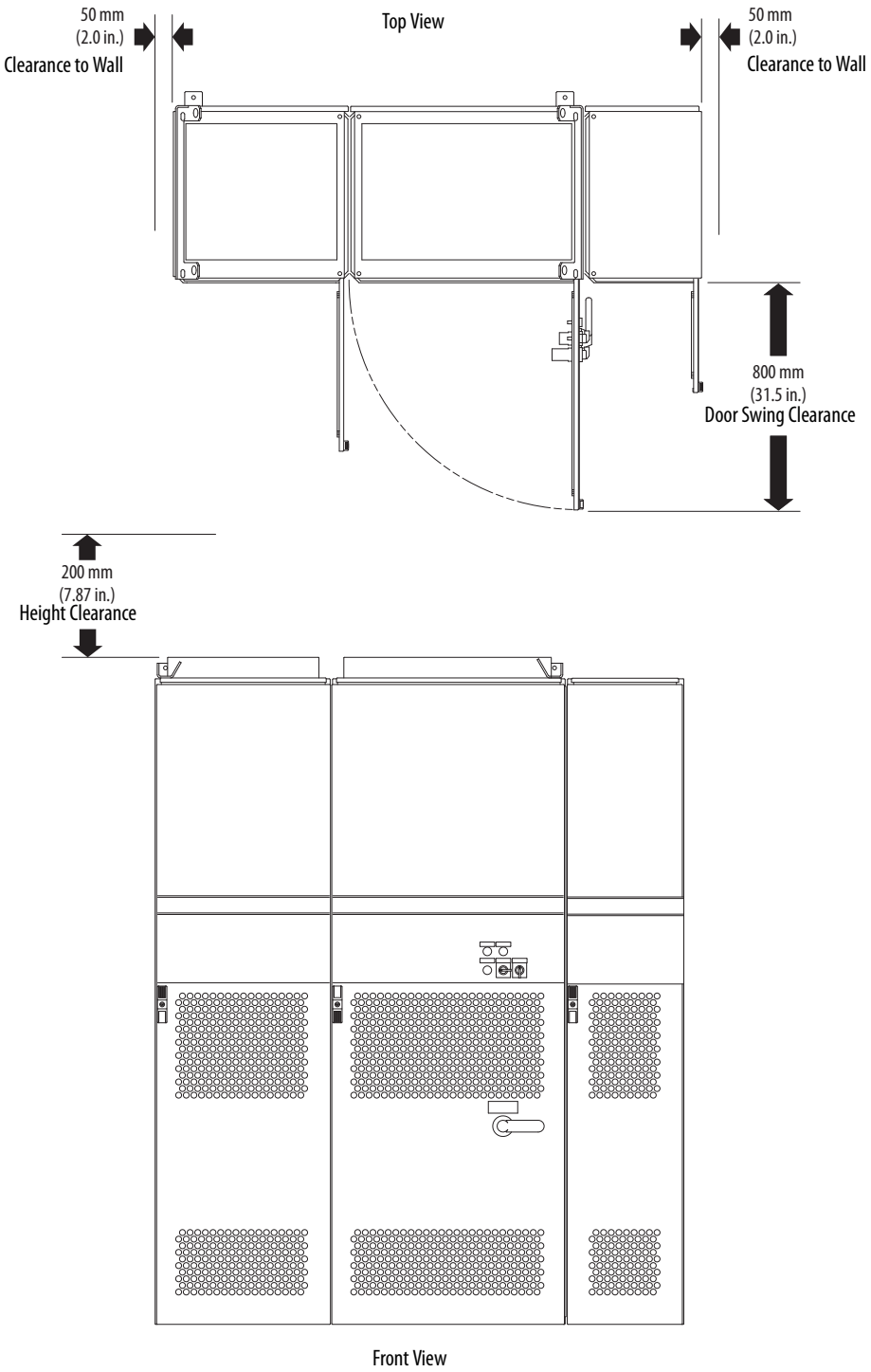

AC Supply Source Considerations

The AFE Frame 10 or Frame 13 in an IP21 Rittal enclosure is suitable for use on a circuit capable of delivering up to a maximum of 100,000 rms symmetrical amperes, 600/690 volts, with recommended fuses or circuit breakers.

The AFE must not be used on undersized or high-impedance supply systems. The supply system kVA must be equal to or greater than the drive-related kW, and the system impedance must be less than 10%. Operation outside these limits can cause instability that results in AFE shutdown.

System Impedance = (PowerFlex 700AFE kVA ÷ Transformer kVA) x Transformer % Impedance

You must consider the kVA of all PowerFlex AFEs on the distribution system and the system impedance of upstream transformers.

ATTENTION: To guard against personal injury and equipment damage that is caused by improper fusing or circuit breaker selection, use only the recommended line fuses or circuit breakers that are specified in Appendix A.

If a residual current detector (RCD) is used as a system ground fault monitor, use only Type B (adjustable) devices to avoid nuisance tripping.

Unbalanced, Ungrounded, or Resistive Grounded Distribution Systems

If phase-to-ground voltage exceeds 125% of normal or the supply system is ungrounded, see Wiring and Grounding Guidelines for Pulse Width Modulated (PWM) AC Drives, publication DRIVES-IN001, for more information.

ATTENTION: The PowerFlex Active Front End is not designed to be used on IT (insulated tera) or corner-grounded power networks above 600V (phase-to-phase voltage). Operation on such a network can cause a hazardous failure of the insulation system of the AFE.

ATTENTION: The LCL filter of the PowerFlex Active Front End contains common mode capacitors that are referenced to ground. These devices **must be disconnected** if the AFE is installed on a resistive grounded distribution system or an ungrounded distribution system. See Figure 37 on page 70 or Figure 38 on page 70 for jumper locations.

ATTENTION: The power structure of the PowerFlex Active Front End in the IP21 Rittal enclosure contains common mode capacitors **that must be disconnected**, regardless of the application in which the AFE is used. For locations of the common mode capacitors and instructions to remove them, see Frame 10 Power Structure on page 72 or Frame 13 Power Structure on page 73.

Input Power Conditioning

These events on the power system that supplies an AFE can cause component damage or shortened product life:

- The power system has power factor correction capacitors that are switched in and out of the system, either by you or by the power company.
- The power source has intermittent voltage spikes in excess of 6000 volts. These spikes can be caused by other equipment on the line or by events such as lightning strikes.
- The power source has frequent interruptions.

Grounding Requirements

The Active Front End Safety Ground-PE must be connected to system ground. Ground impedance must conform to the requirements of national and local industrial safety regulations and/or electrical codes. Check the integrity of all ground connections periodically.

Recommended Grounding Scheme

For installations in which the AFE is within an enclosure, use one safety ground point or ground bus bar connected directly to building steel. All circuits including the AC input ground conductor must be grounded independently and directly to this point or ground bus bar.

Figure 30 - Typical Grounding Example for AFE Frame 10 in IP21 Rittal Enclosure

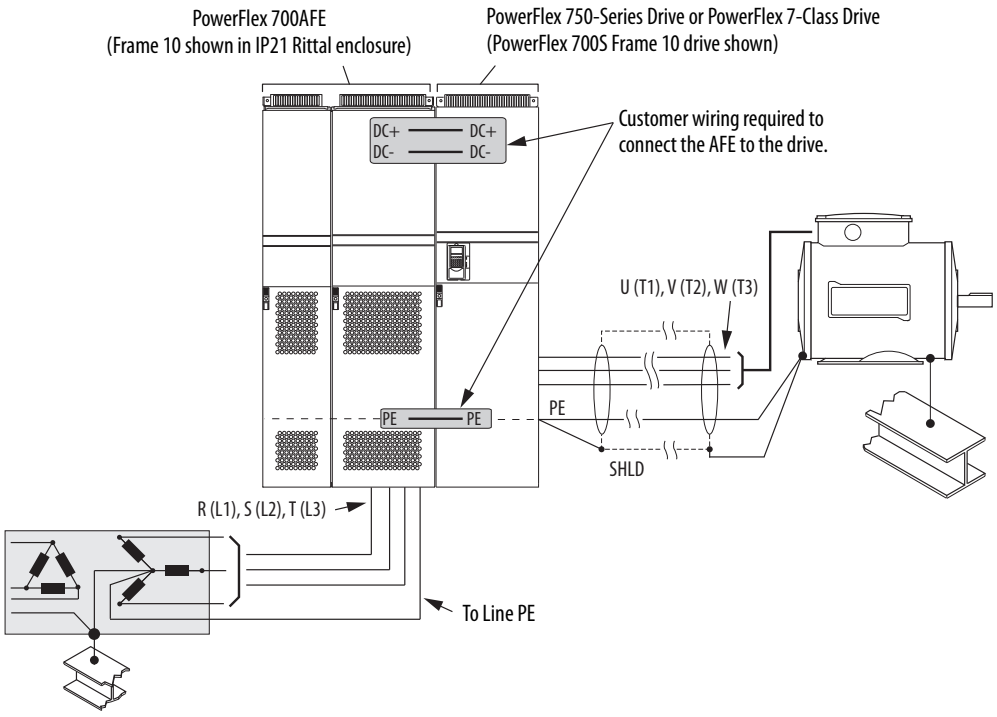

Figure 31 - Typical Grounding Example for AFE Frame 13 in IP21 Rittal Enclosure

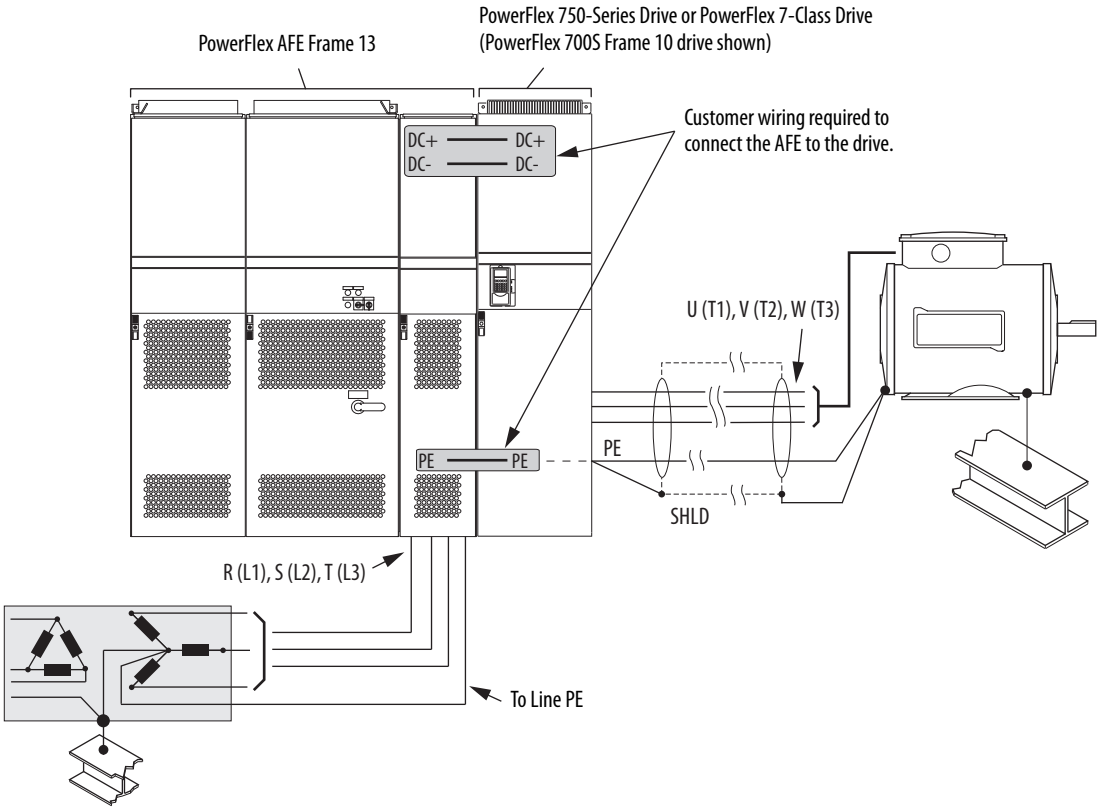

Safety Ground - PE

This ground is the safety ground for the AFE that code requires. This point must be connected to adjacent building steel (girder or joist), a floor ground rod, or bus bar (see Figure 31). Grounding points must comply with national and local industrial safety regulations and/or electrical codes.

Shield Termination - SHLD

The Shield terminal (Figure 34 or Figure 35) provides a grounding point for the AFE cable shield. It must be connected to an earth ground by a separate continuous lead. The drive cable shield must be connected to this terminal on the AFE end and the drive frame on the drive end. Use a shield terminating or EMI clamp to connect the shield to this terminal.

Fuses and Circuit Breakers

The IP21 Rittal enclosure for the AFE includes a motor-controlled circuit breaker (MCCB) and DC bus output fusing. The MCCB is used for precharge operation. For details on MCCB and precharge operation, see page 81. For fuse and circuit breaker information, see Appendix A. Local/national electrical codes can determine additional requirements for the installations.

Power Wiring

Most start-up difficulties are the result of incorrect wiring. Verify that the wiring is done as instructed. Read and understand the instructions before you begin to installation the AFE.

ATTENTION: The following information is a guide for proper installation. Rockwell Automation does not assume responsibility for the compliance or noncompliance to any code, national, local, or otherwise, for the proper installation of this unit or associated equipment. A risk of personal injury and/or equipment damage exists if codes are ignored during installation.

Power Cable Types Acceptable for 400…690 Volt Installations

ATTENTION: National Codes and standards (NEC, VDE, CSA, BSI, and so forth) and local codes outline provisions for safely installing electrical equipment. Installation must comply with specifications regarding wire types, conductor sizes, branch circuit protection, and disconnect devices. Failure to do so can result in personal injury and/or equipment damage.

Various cable types are acceptable for PowerFlex Active Front End installations. For many installations, unshielded cable is adequate, provided it can be separated from sensitive circuits. As an approximate guide, use a spacing of 0.3 meters (1 ft) for every 10 meters (32.8 ft) of length. In all cases, avoid long parallel runs. Do not use cable with an insulation thickness less than or equal to 15 mils (0.4mm/0.015 in.). Use only copper wire. Wire gauge requirements and recommendations are based on 75 °C (167 °F). Do not reduce wire gauge when using higher temperature wire.

Unshielded Cable

THHN, THWN, or similar wire is acceptable for PowerFlex Active Front End installation in dry environments provided adequate free air space and/or conduit fill rates limits are provided. **Do not use THHN or similarly coated wire in wet areas**. Any wire that is chosen must have a minimum insulation thickness of 15 mils and cannot have large variations in insulation concentricity.

Shielded Cable

Shielded cable contains the benefits of multi-conductor cable with the added benefit of a copper braided shield that can contain much of the noise that is generated by a typical AC drive. Consider shielded cable in installations with sensitive equipment such as weigh scales, capacitive proximity switches, and other devices affected by electrical noise in the distribution system. Applications with large numbers of drives in a similar location, imposed EMC regulations, or a high degree of communication and networking are also good candidates for shielded cable.

Consider the general specifications that are dictated by the environment of the installation, including temperature, flexibility, moisture characteristics, and chemical resistance. Also, include a braided shield that is specified by the manufacturer as having coverage of at least 75%. An additional foil shield can improve noise containment.

A good example of recommended cable is Belden 29528 - 29532 (AWG-1 through AWG-410). This cable has three XLPE insulated conductors plus ground with a spiral copper shield that is surrounded by a PVC jacket.

Armored Cable

Cable with continuous aluminum armor is often recommended in drive system applications or specific industries. It offers most of the advantages of standard shielded cable and also combines considerable mechanical strength and resistance to moisture. It can be installed in concealed and exposed manners, and removes the requirement for conduit (EMT) in the installation. It can also be directly buried or embedded in concrete.

Because noise containment is affected by incidental grounding of the armor to building steel when the cable is mounted, we recommend that the armored cable has an overall PVC jacket. See Chapter 2, 'Wire Types' in Wiring and Grounding Guidelines for Pulse Width Modulated (PWM) AC Drives, publication DRIVES-IN001.

Interlocked armor is acceptable for shorter cable runs, but continuous welded armor is preferred.

Best performance is achieved with three spaced ground conductors, but acceptable performance below 200 Hp is provided by use of one ground conductor.

Recommended shielded/armored wire is listed in Table 11.

Table 11 - Recommended Shielded/Armored Wire for AFE in IP21 Rittal Enclosure

Location	Rating/Type	Description
Standard (option 1)	1000V, 90 °C (194 °F) XHHW2/RHW-2 Anixter B29528-B29532 Belden 29528-29532 Or equivalent	• Four tinned copper conductors with XLPE insulation. • Copper braid/aluminum foil combination shield and tinned copper drain wire. • PVC jacket.
Standard (option 2)	Tray rated 1000V, 90 °C (194 °F) RHH/RHW-2 Anixter OLFLEX-76*xxx*03 Or equivalent	• Three tinned copper conductors with XLPE insulation. • Corrugated copper tape with three bare copper grounds in contact with shield. • PVC jacket.
Class I & II; Division I & II	Tray rated 1000V, 90 °C (194 °F) RHH/RHW-2 Anixter 7VFD-*xxxx* or equivalent	• Three bare copper conductors with XLPE insulation and impervious corrugated continuously welded aluminum armor. • Black sunlight resistant PVC jacket overall. • Three copper grounds.

Cable Trays and Conduit

ATTENTION: To avoid a possible shock hazard that is caused by induced voltages, unused wires in the conduit must be grounded at both ends. For the same reason, if a drive that shares a conduit is being serviced or installed, all drives that use this conduit must be disabled. Disable the drives to help minimize the possible shock hazard from 'cross coupled' motor leads.

If cable trays or large conduits are used, see the guidelines in Wiring and Grounding Guidelines for Pulse Width Modulated (PWM) AC Drives, publication DRIVES-IN001.

Select and Verify Control Transformer Voltage

The control transformer in the AFE is used to match the input AC line voltage of the AFE in an IP21 Rittal enclosure to the 230V control voltage.

Verify that the control voltage is set appropriately for the supplied AC line voltage. If necessary, use this procedure to change the control voltage.

1. Locate the X3 terminal block (Figure 32).

Figure 32 - X3 Terminal Block Location for AFE in IP21 Rittal Enclosure

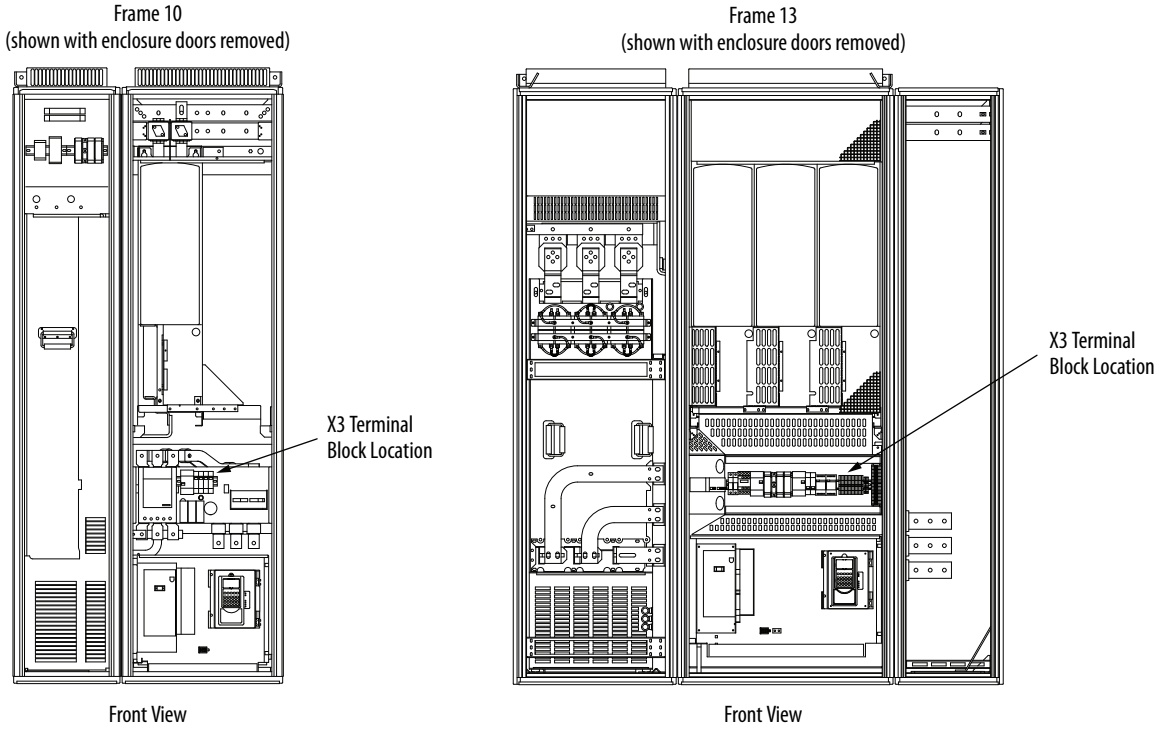

2. To match the AC line voltage, move the wire that is shown in Figure 33 to the appropriate X3 terminal.

Figure 33 - Input Voltage Setting for Control Voltage on Frames 10 and 13 in IP21 Rittal Enclosure

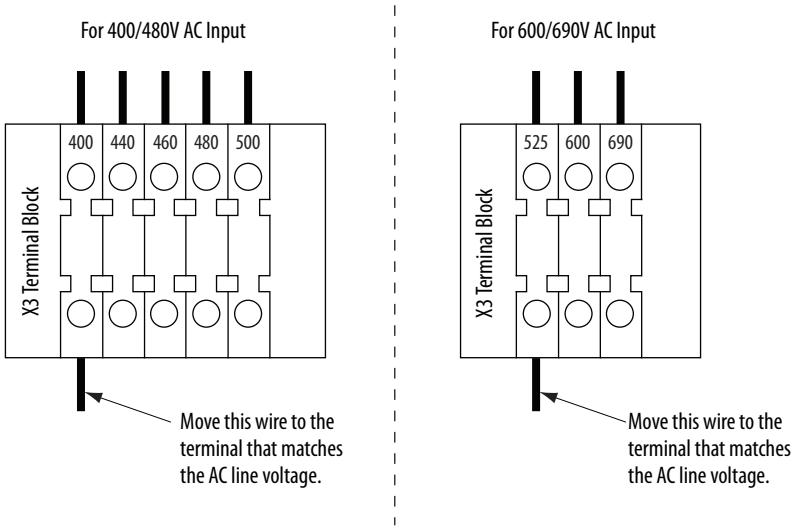

Power Terminals for AFE in IP21 Rittal Enclosure

Figure 34 and Figure 35 show the power terminal locations and specifications for AFE Frames 10 and 13 in an IP21 Rittal enclosure.

Figure 34 - AFE Frame 10 Power Terminal Locations in IP21 Rittal Enclosure

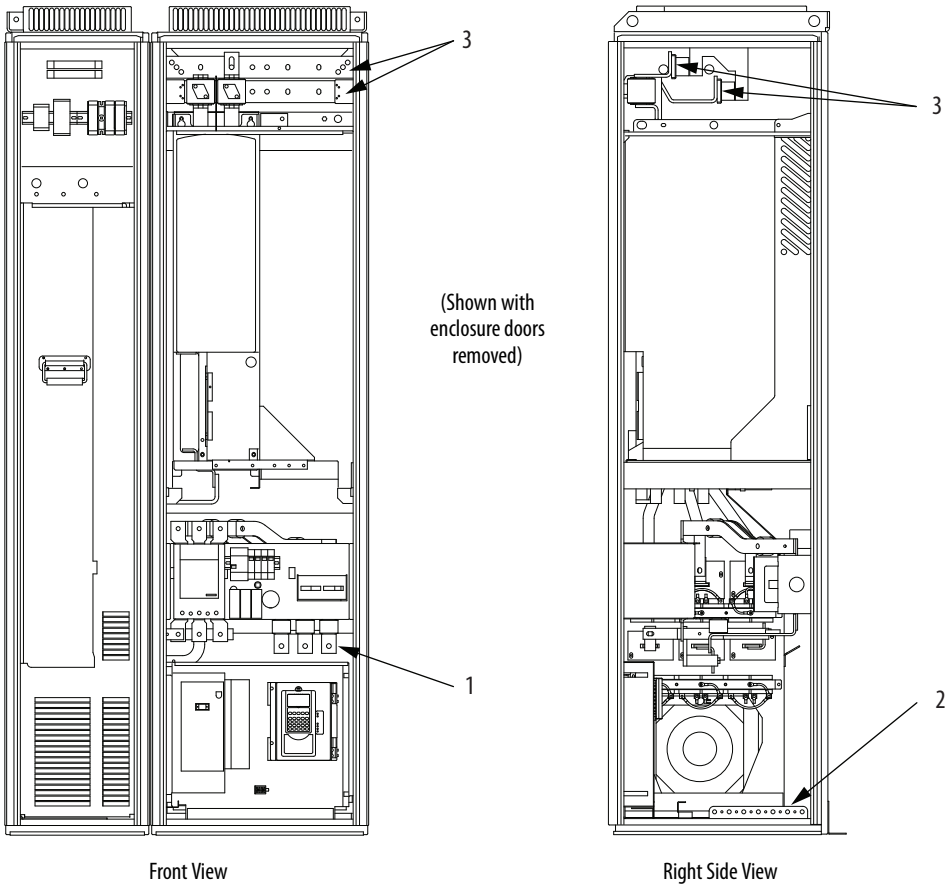

Table 12 - AFE Frame 10 Power Terminal Specifications in IP21 Rittal Enclosure

Item	Name	Frame	Description	Wire Size Range (1) (2)		Torque	Terminal Bolt Size (3) (4)
				Max	Min	Recommended	
1	Input power terminals L1, L2, L3 (1)	10	Input power	300 mm^2 (600 MCM)	2.1 mm^2 (14 AWG)	40 N•m (354 lb•in)	M10
2	SHLD terminal, PE, ground (3)	10	Terminating point for wiring shields	300 mm^2 (600 MCM)	2.1 mm^2 (14 AWG)	40 N•m (354 lb•in)	M10
3	DC bus (3) (DC–, DC+)	10	DC output	300 mm^2 (600 MCM)	2.1 mm^2 (14 AWG)	70 N•m (620 lb•in)	M12

(1) Maximum/minimum sizes that the terminals accept. These sizes are not recommendations.
(2) Do **not** exceed maximum wire size. Parallel connections can be required.
(3) These connections are bus bar type terminations and require the use of lug type connectors.
(4) Apply counter-torque to the nut on the other side of terminations when tightening or loosening the terminal bolt to avoid damage to the terminal.

Figure 35 - AFE Frame 13 Power Terminal Locations in IP21 Rittal Enclosure

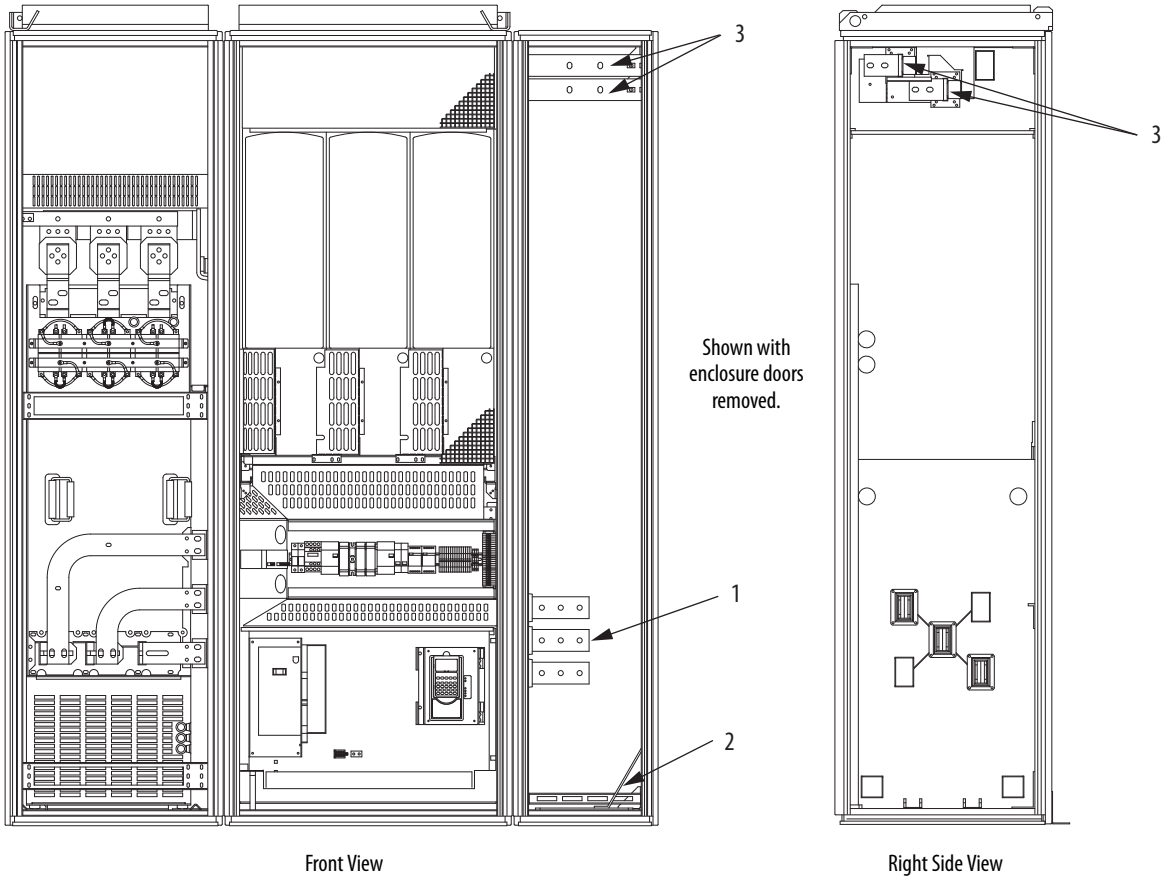

Table 13 - AFE Frame 13 Power Terminal Specifications in IP21 Rittal Enclosure

Item	Name	Frame	Description	Wire Size Range (1) (2)		Torque	Terminal Bolt Size (3) (4)
				Maximum	Minimum	Recommended	
1	Input power terminals L1, L2, L3 (1)	13	Input power	300 mm^2 (600 MCM)	2.1 mm^2 (14 AWG)	70 N•m (620 lb•in)	M12
2	SHLD terminal, PE, ground (3)	13	Terminating point for wiring shields	300 mm^2 (600 MCM)	2.1 mm^2 (14 AWG)	40 N•m (354 lb•in)	M10
3	DC bus (3) (DC–, DC+)	13	DC output	300 mm^2 (600 MCM)	2.1 mm^2 (14 AWG)	70 N•m (620 lb•in)	M12

(1) Maximum/minimum sizes that the terminals accept. These sizes are not recommendations.
(2) Do **not** exceed maximum wire size. Parallel connections can be required.
(3) These connections are bus bar type terminations and require the use of lug type connectors.
(4) Apply counter-torque to the nut on the other side of terminations when tightening or loosening the terminal bolt to avoid damage to the terminal.

DC Bus Output Wiring

The length of the DC bus connections between the AFE and the drive or drives must be minimized to keep the bus inductance low for reliable system operation. For more information, see Drives in Common Bus Configurations, publication DRIVES-AT002.

Route the AC Input, Ground (PE), and DC Bus Output Wiring for AFE in IP21 Rittal Enclosure

ATTENTION: To minimize disruption of airflow through the enclosure and avoid overheating within the AFE enclosure, remove only the minimum area that is needed to route the power cables.

In addition, remove only the minimum area from the enclosure within the shaded areas that are shown in Figure 36 for routing the AC input, ground (PE), and DC bus output wiring.

When you remove sections for routing in other areas, airflow is disrupted throughout the enclosure, and causes overheating.

Frame 10

The AC input and ground (PE) wiring for the IP21 Rittal enclosure can be routed through either the bottom of the enclosure, or through the bottom right side of the enclosure (see shaded area in Figure 36).

The DC bus output wiring for the IP21 Rittal enclosure must be routed through the top right side of the enclosure (see shaded area in Figure 36).

Figure 36 - Routing Areas for AC Input, Ground, and DC Bus Output Wiring for AFE Frame 10 in IP21 Rittal Enclosure

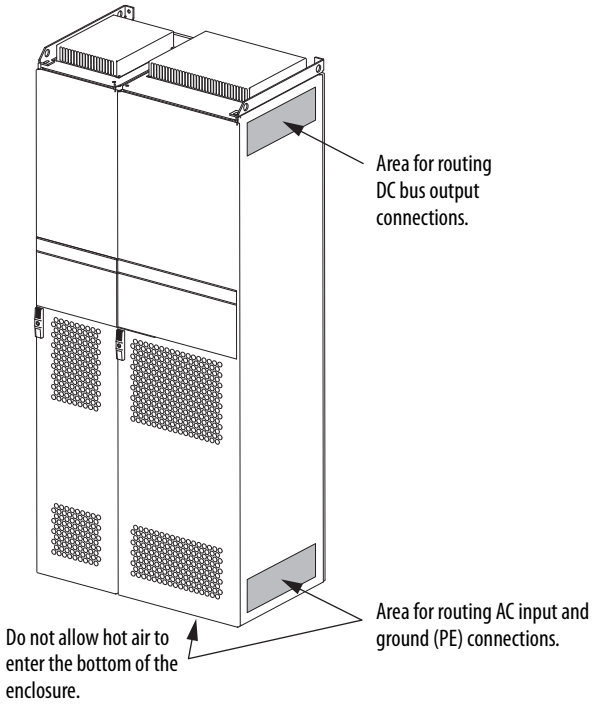

Frame 13

The AC input, ground (PE), and DC bus output are located in the right-most bay (see front view of Figure 35). The AC input, ground, and DC bus output

wiring can be routed through the top, bottom, or right side of the right-most bay.

Disconnect the Common Mode Capacitors

Frame 10 LCL Filter

The Frame 10 AFE LCL filter contains common mode capacitors that are referenced to ground. To guard against AFE damage, these devices **must be disconnected** if the AFE is installed on a high resistance grounded distribution system, or an ungrounded distribution system where the line-to-ground voltages on any phase exceed 125% of the nominal line-to-line voltage.

To access the common mode capacitors, the LCL filter must be removed from the enclosure. To remove the Frame 10 AFE LCL filter from the IP21 Rittal enclosure, see the instructions in the PowerFlex Active Front End—Frame 10 Hardware Service Manual, publication 20Y-TG001.

ATTENTION: To avoid an electric shock hazard, verify that the voltage on the bus capacitors has discharged completely before you remove or install any jumpers. Check the DC bus voltage between the +DC and –DC terminals, between the +DC terminal and the chassis, and between the –DC terminal and the chassis. The voltage must be zero for all three measurements.

To disconnect the common mode capacitors, remove the jumpers that are shown in Figure 37. For more information on ungrounded system installation, see Wiring and Grounding Guidelines for Pulse Width Modulated (PWM) AC Drives, publication DRIVES-AT001.

Figure 37 - AFE Frame 10 LCL Filter Common Mode Capacitor Jumper Locations

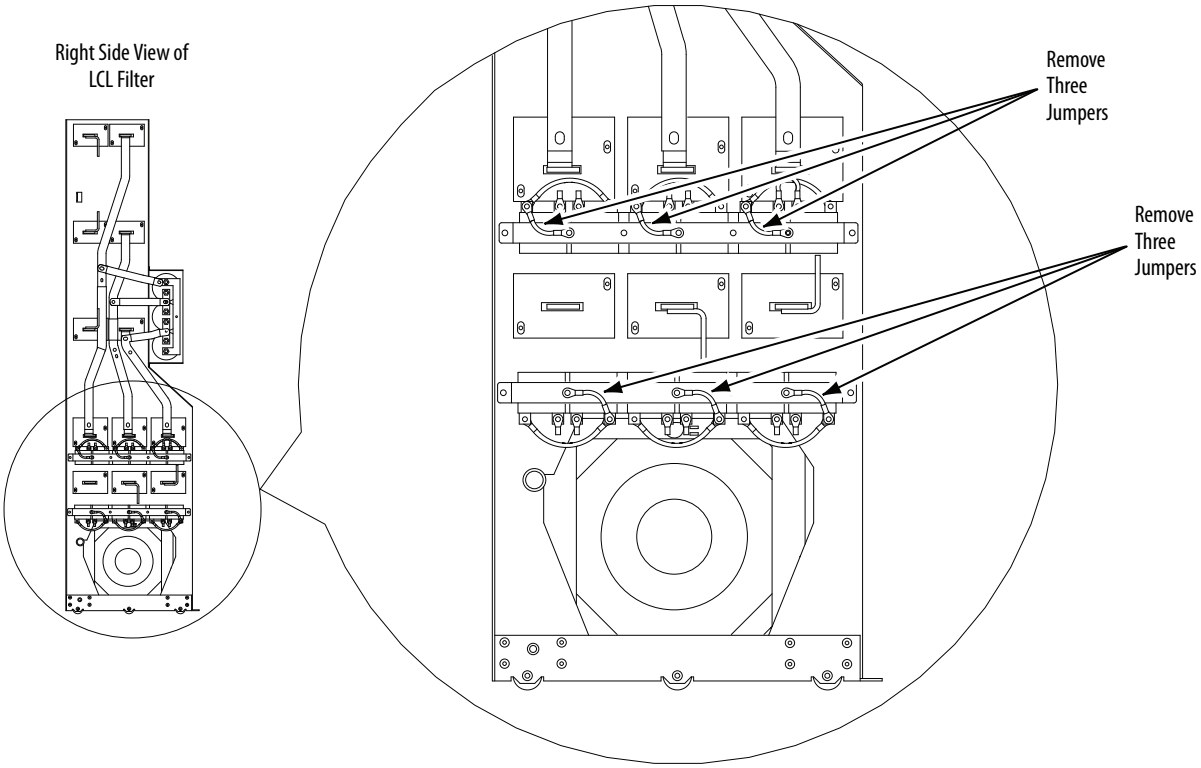

Frame 13 LCL Filter

The Frame 13 AFE LCL filter contains common mode capacitors that are referenced to ground. To guard against AFE damage, these devices **must be disconnected** if the AFE is installed on a high resistance grounded distribution system, or an ungrounded distribution system where the line-to-ground voltages on any phase exceed 125% of the nominal line-to-line voltage.

To remove the AFE Frame 13 LCL filter from the IP21 Rittal enclosure, see the instructions in the PowerFlex Active Front End—Frame 13 Hardware Service Manual, publication 20Y-TG002.

ATTENTION: To avoid an electric shock hazard, verify that the voltage on the bus capacitors has discharged completely before you remove or install any jumpers. Check the DC bus voltage between the +DC and –DC terminals, between the +DC terminal and the chassis, and between the –DC terminal and the chassis. The voltage must be zero for all three measurements.

To disconnect the common mode capacitors, remove the upper guard and then remove the jumpers that are shown in Figure 38. For more information on ungrounded system installation, see Wiring and Grounding Guidelines for Pulse Width Modulated (PWM) AC Drives, publication DRIVES-AT001.

Figure 38 - AFE Frame 13 LCL Filter Common Mode Capacitor Jumper Locations

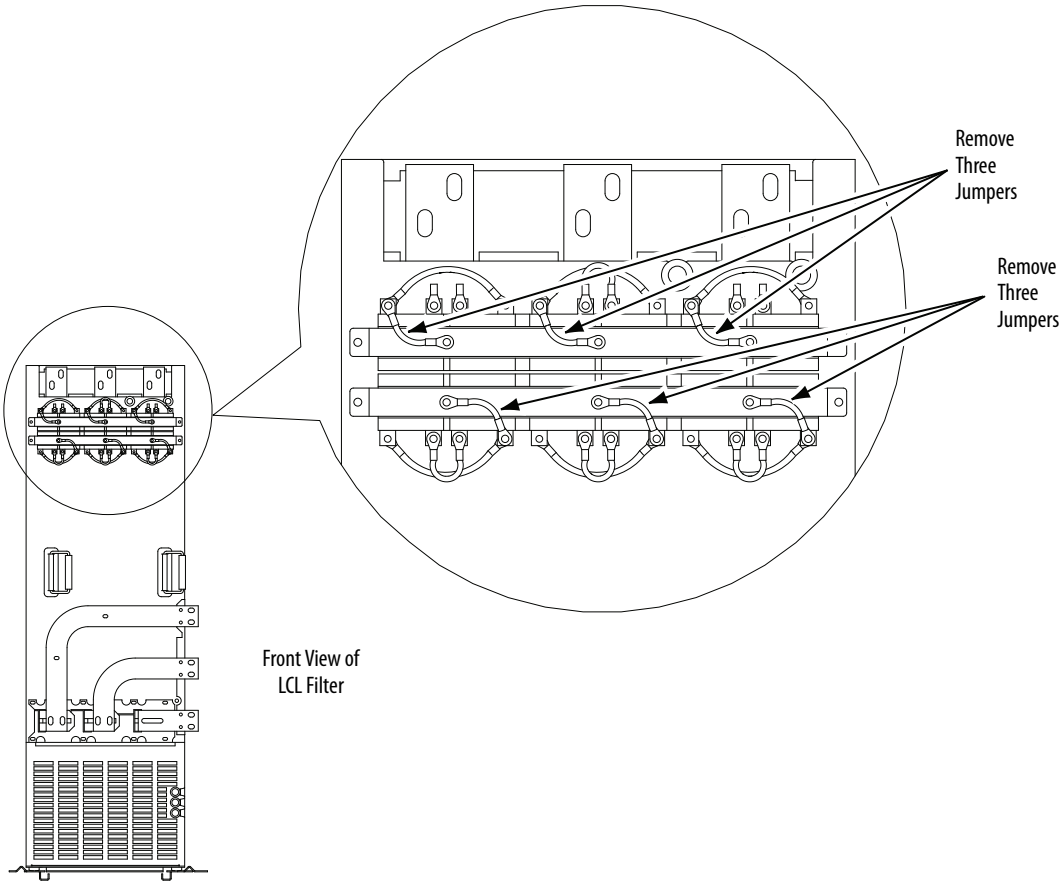
Remove
Three
Jumpers
Remove
Three
Jumpers
Front View of
LCL Filter

Frame 10 Power Structure

The AFE Frame 10 power structure in the IP21 Rittal enclosure contains **common mode capacitors that must be removed**.

To remove these capacitors from the AFE Frame 10 power structure, follow these steps.

1. Locate the common mode capacitors on the Frame 10 power structure.

Location of Common Mode Capacitors on Frame 10 Power Structure

2. Remove the common mode capacitors.
   a. Disconnect the two black wires.
   b. Unscrew and remove the capacitor assembly consisting of two capacitors on a small metal bracket.

Close-up View of Common Mode Capacitor Assembly

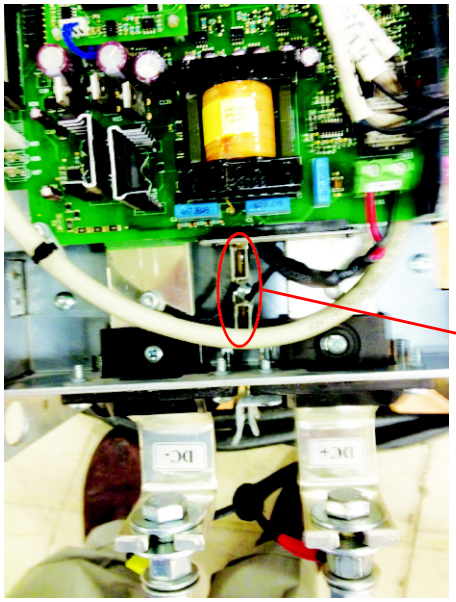

Close-up View of Common Mode Capacitor Assembly

Frame 13 Power Structure

The AFE Frame 13 power structure in the IP21 Rittal enclosure contains **common mode capacitors that must be removed**. These capacitors are on the Phase V (center) module of the power structure.

To remove these capacitors from the AFE Frame 13 power structure, follow these steps.

1. Locate the common mode capacitors on the Phase V module of the Frame 13 power structure.

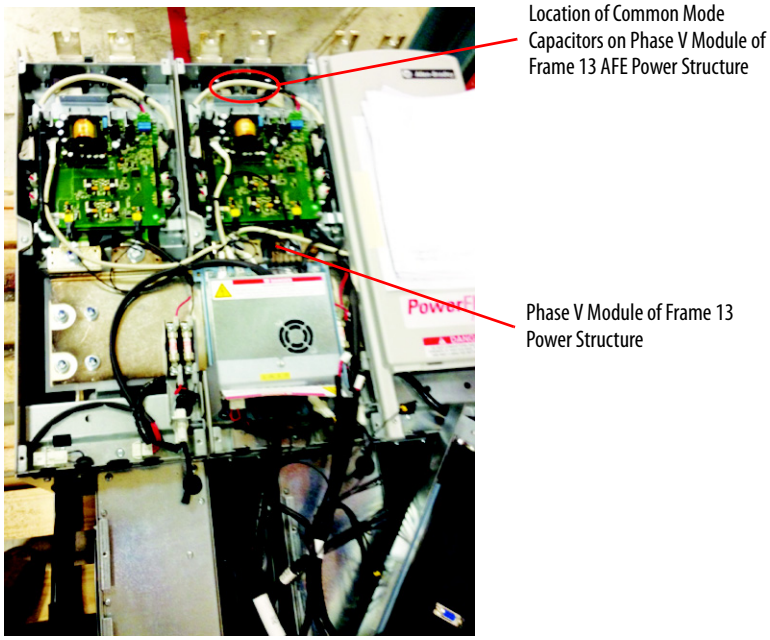

2. Remove the common mode capacitors.
   a. Disconnect the two black wires.

b. Unscrew and remove the capacitor assembly consisting of two capacitors on a small metal bracket.

Close-up View of Common Mode Capacitor Assembly

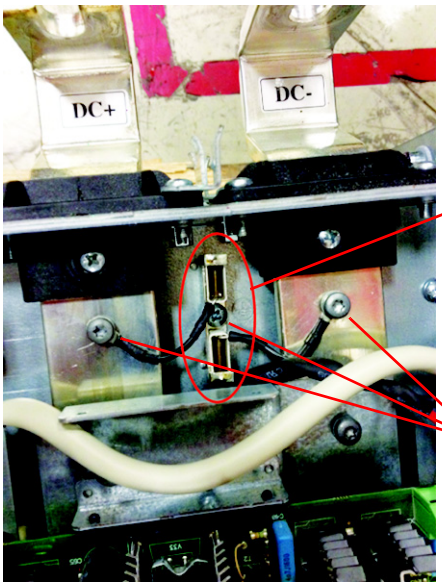

Close-up View of Common Mode Capacitors on Phase V Module of Frame 13 AFE Power Structure

Disconnect Wires and Unscrew Capacitor Assembly

Using the AFE with PowerFlex Drives

When the Active Front End is used with drives that have common mode capacitors (for example, PowerFlex 7-Class or PowerFlex 750-Series drives), the common mode capacitors of these drives **must be disconnected**. See the documentation of the respective drives.

When supplying power to PowerFlex drives of different frame sizes on the same DC bus, additional bus capacitance can be needed. For details, see Drives in Common Bus Configurations, publication DRIVES-AT002.

Control Wiring

The AFE in an IP21 Rittal enclosure is wired at the factory and programmed to operate from the operator switches on the front of the enclosure. See Table 17 and Figure 40 for I/O terminal designations. If customized (or remote) control is required, then you must change the control wiring and correspondent digital I/O parameter setting.

Here are some important points to remember about I/O wiring:

- Always use copper wire.
- Wire with an insulation rating of 600V or greater is recommended.
- Control and signal wires must be separated from power wires by at least 0.3 meters (1 foot).

- When it is unavoidable to cross control and signal wires with power wires, always cross power wires at a 90° angle.

IMPORTANT I/O terminals that are labeled '(–)' or 'Common' **are not** referenced to earth ground. They are designed to reduce common mode interference. Grounding these terminals can cause signal noise.

ATTENTION: Inputs must be configured with software and jumpers (see Analog I/O Configuration on page 79). If you configure an analog input for 0…20 mA operation and drive it from a voltage source, you can cause component damage. Verify proper configuration before you apply input signals.

ATTENTION: It is important to disable the variable frequency drives that are connected to the AFE output when the AFE is not active (not modulating).

Connect the 'Inverter Enable' output of the AFE to each variable frequency drive enable input, or enable parameter 132 [Contact Off Cnfg] to force off the main contactor if there is a fault. This action makes sure that once the AFE stops modulating, there is no motoring current flowing through the AFE IGBT diodes. Failure to disable the AFE output can result in component damage or a reduction in product life.

When you enable parameter 132, see page 109 for details. The AFE is shipped with parameter 132 disabled. The disabled parameter does not stop or shut down DC output when a fault occurs.

Signal and Control Wire Types

Table 14 - Recommended Signal Wire for AFE in IP21 Rittal Enclosure

Signal Type	Wire Types	Description	Minimum Insulation Rating
Analog I/O	Belden 8760/9460 (or equivalent)	0.5 mm2 (22 AWG), twisted pair, 100% shield with drain (1)	300V, 75…90 °C (167…194 °F)
	Belden 8770 (or equivalent)	0.5 mm^2 (22 AWG), 3-conductor, shielded for remote pot only	
EMC compliance	See CE Conformity on page 82 for details.		

(1) If the wires are short and contained within an enclosure that has no sensitive circuits, the use of shielded wire is not necessary, but is always recommended.

Table 15 - Recommended Control Wire for Digital I/O

Type	Wire Types	Description	Minimum Insulation Rating
Unshielded	Per US NEC or applicable national or local code	—	300V, 60 °C (140 °F)
Shielded	Multi-conductor shielded cable such as Belden 8770 (or equivalent)	0.5 mm^2 (22 AWG), 3-conductor, shielded	

Figure 39 - AFE I/O Terminal Blocks and Jumpers

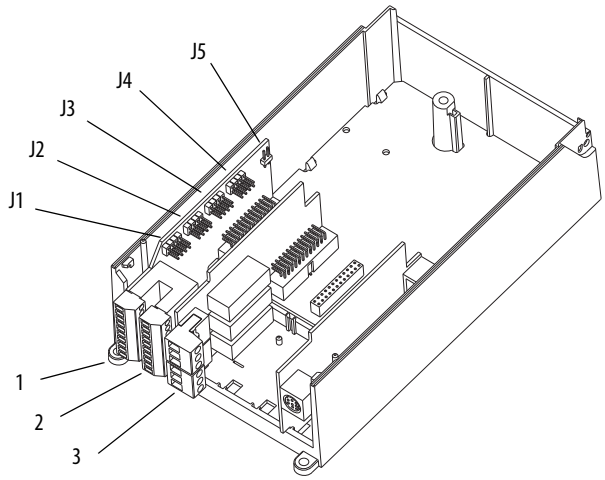

I/O Terminal Blocks

Table 16 - I/O Terminal Block Specifications for AFE in IP21 Rittal Enclosure

No.	Name	Description	Wire Size Range (1)		Torque	
			Max	Min	Max	Recommended
1	Analog I/O	Analog I/O signals	2.5 mm^2 (14 AWG)	0.5 mm^2 (22 AWG)	0.2 N•m 1.8 lb•in	0.2 N•m 1.8 lb•in
2	Digital inputs	Digital input signals	2.5 mm^2 (14 AWG)	0.5 mm^2 (22 AWG)	0.2 N•m 1.8 lb•n	0.2 N•m 1.8 lb•in
3	Digital outputs	Digital out relays	2.5 mm^2 (14 AWG)	0.5 mm^2 (22 AWG)	0.5 N•m 4.5 lb•in	0.5 N•m 4.5 lb•in

(1) Maximum/minimum that the terminal block can accept. These sizes are not recommendations.

I/O Cable Grounding

When installing shielded multi-conductor cable for analog and digital I/O, strip the cable from the terminal plug so you can fix it to the cable clamp for grounding.

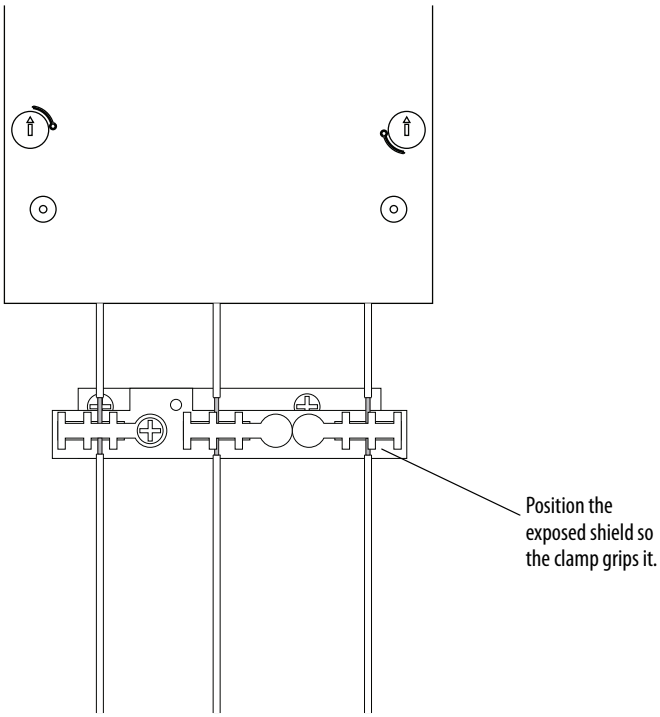

IMPORTANT: This clamp is not designed for strain relief.

ATTENTION: For the AFE in the IP21 Rittal enclosure, digital inputs 1, 3, 4, and 5, and digital outputs 1 and 2, are wired at the factory and programmed to operate from the controls on the front of the enclosure. Digital output 3 is programmable and factory-wired for +24V DC only. Do not change the wiring and programming for those digital inputs and outputs, or it results in malfunction of the system.

Table 17 - I/O Terminal Designations for AFE in IP21 Rittal Enclosure

	No.	Signal	Default Configuration	Description
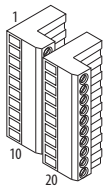	1	Analog In 1 (–) (1)	(2)	Isolated (3), bipolar, differential, 9-bit and sign, 88k Ω input impedance. A jumper (see Table 18) selects 0…10V, ±10V, or 4…20 mA. Default: 0…10V (Ri = 200k Ω), 4…20 mA (Ri = 100 Ω).
	2	Analog In 1 (+) (1)		
	3	Analog In 2 (–) (1)		
	4	Analog In 2 (+) (1)		
	5	–10V Pot Reference	—	2k Ω min, 10 mA max load, 1% accuracy
	6	Pot Common (GND)		For (+) and (–) 10V pot references
	7	+10V Pot Reference	—	2k Ω min, 10 mA max load, 1% accuracy
	8	Analog Out 1 (+)	(2)	Bipolar (current out is not bipolar), 9-bit and sign, 2k Ω min load. A jumper (see Table 18) selects 0…10V, ±10V, or 4…20 mA.
	9	Analog Out Common		
	10	Analog Out 2 (+)		
	11	Digital In 1	RunCmd	24V DC - Opto isolated (250V) Low state: less than 5V DC High state: greater than 20V DC, 11.2 mA DC Enable: Digital Input 6 is jumper selectable for HW Enable. On-time: < 16.7 ms, Off-Time < 1 ms
	12	Digital In 2	Ext. Reset	
	13	Digital In 3	Enable Mcont	
	14	Digital In 4	Contactor Ack	
	15	Digital In 5	LCL Temp	
	16	Digital In 6/Hardware Enable, see page 80		
	17 18	Digital In Common		Allows source or sink operation
	19	+24V DC (4)	—	Unit supplied logic input power
	20	24V Common (4)	—	Common for internal power supply
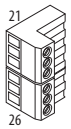	21	Digital Out 1 – N.C. (5)	Contact Ctrl	Max. Resistive Load: 240V AC/30V DC – 1200VA, 150 W Max current: 5 A, Min Load: 10 mA Max. Inductive Load: 240V AC/30V DC – 840VA, 105 W Max current: 3.5 A, Min Load: 10 mA **IMPORTANT:** See the Attention above this table for more details.
	22	Digital Out 1 Common		
	23	Digital Out 1 – N.O. (5)		
	24	Digital Out 2 – N.C. (5)	Fault	
	25	Digital Out 2/3 Com.		
	26	Digital Out 3 – N.O. (5) (6)	Active	

(1) **Important:** Input must be configured with a jumper. AFE damage can occur if jumper is not installed properly. See Analog I/O Configuration on page 79.
(2) These inputs/outputs are dependent on a number of parameters.
(3) Differential Isolation - External source must be maintained at less than 160V regarding PE. Input provides high common mode immunity.
(4) 150 mA maximum load. Can be used to provide control power from an external 24V source when main power is not applied.
(5) Contacts in unpowered state. Any relay that is programmed as Fault or Alarm energizes (pick up) when power is applied to the AFE, and de-energizes (drop out) when a fault or alarm exists. Relays selected for other functions energize only when that condition exists and de-energizes when the condition is removed.
(6) When this output is configured as active, it can be wired to the Enable input of the connected drives to prevent the AFE from supplying power when the AFE is not running.

Typical I/O Wiring

The IP21 Rittal enclosure for the AFE is wired at the factory and programmed to operate from the operator switches on the front of the enclosure. The AFE in the IP21 Rittal enclosure has a motor-controlled circuit breaker (MCCB). The AFE is configured to run when precharge is complete, the MCCB is

closed, and no faults are present. The Figure 40 shows the factory-installed wiring.

Figure 40 - Factory-installed Wiring Diagram for AFE in IP21 Rittal Enclosure

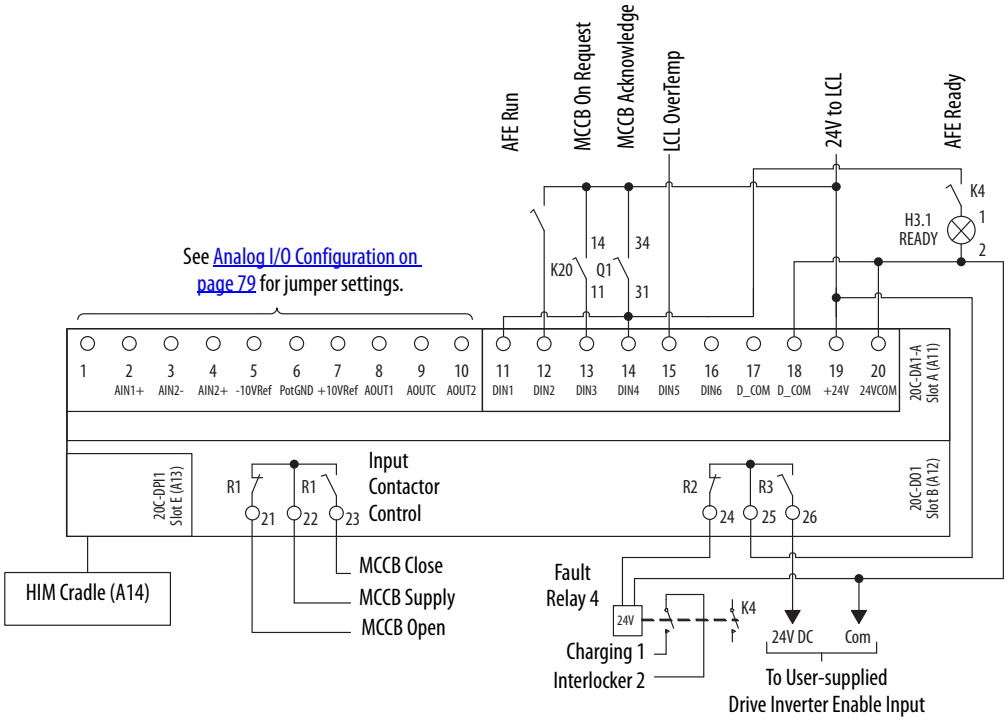

Analog I/O Configuration

IMPORTANT Analog I/O must be configured through programming, and the jumpers shown in Table 18. See Figure 39 for jumper locations and Table 18 for I/O jumper configurations.

Table 18 - I/O Configuration for AFE in IP21 Rittal Enclosure

Signal	Jumper	Setting		
Analog inputs	J1 (analog in 1) J2 (analog in 2)	0…20 mA	0…10V	±10V
		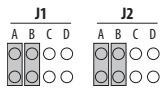	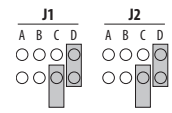	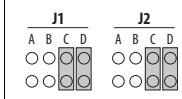
Analog outputs	J3 (analog out 1) J4 (analog out 2)	0…20 mA	0…10V	±10V
		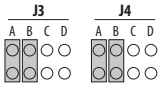	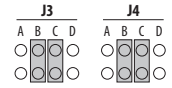	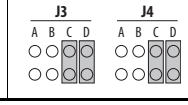

Hardware Enable Circuitry

ATTENTION: For the AFE in the IP21 Rittal enclosure, digital inputs 1, 3, 4, and 5, and digital outputs 1 and 2, are wired at the factory and programmed to operate from the controls on the front of the enclosure. Do not change the wiring and programming for those digital inputs and outputs, or it results in malfunction of the system.

You can program a digital input as an Enable input. The AFE software interprets the status of this input. If the application requires the AFE to be disabled without software interpretation, a 'dedicated' hardware enable configuration can be used. Remove jumper J5 (Figure 39) and wire the enable input to Digital In 6 (see Table 19). Verify that [Digital In6 Sel], parameter 226 is set to '1' (Enable).

Table 19 - Hardware Enable Configuration for AFE in IP21 Rittal Enclosure

Signal	Jumper	Setting	
Hardware Enable	J5	Hardware Enable	Input Programmable (no hardware enable)
		J5 A B	J5 A B

Analog I/O Wiring Examples for AFE in IP21 Rittal Enclosure

Input/Output	Connection Example	Required Parameter Changes
Potentiometer unipolar DC volt reference 10k Ω Pot. recommended (2k Ωm min)	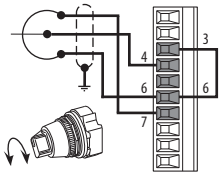	• Configure input for voltage: Parameter 200 and set appropriate jumper per Table 18. • Adjust scaling: Parameters 80/81 and 204/205 • View Results: Parameter 018
Analog voltage input unipolar DC volt reference 0…10V input	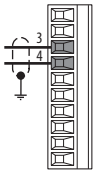	• Configure input for voltage: Parameter 200 and set appropriate jumper per Table 18. • Adjust scaling: Parameters 80/81 and 204/205 • View results: Parameter 018
Analog current input unipolar DC volt reference 4…20 mA input	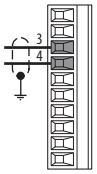	• Configure input for current: Parameter 200 and set appropriate jumper per Table 18. • Adjust scaling: Parameters 80/81 and 204/205 • View results: Parameter 018.
Analog output ±10V, 4…20 mA bipolar +10V unipolar (shown)	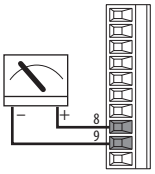	• Configure with Parameter 207 and set appropriate jumper per Table 18. • Select source value: Parameter 209 - [Analog Out1 Sel] • Adjust scaling: Parameters 210/211

Precharging the AFE

This section contains important information about AFE precharging.

Introduction

An AFE in the IP21 Rittal enclosure contains an internal precharging circuit. The precharging unit is used to charge the DC bus capacitors. The charging time depends on the capacitance of the intermediate circuit and the resistance of the charging resistors. Table 20 shows the technical specifications for the precharge in the AFE enclosure. For correct operation of the precharging circuit, the input circuit breaker and the precharging circuit contactor must be controlled by the AFE.

Table 20 - Total DC Bus Capacitance Limits for Precharging Circuit of AFE in IP21 Rittal Enclosure

Frame Size	Resistance	Capacitance, min (1)	Capacitance, max (2)
10	2 x 20 Ω	9900 µF	70,000 µF
13	2 x 11 Ω	29,700 µF	128,000 µF

(1) The minimum capacitance is built into the AFE.
(2) The maximum capacitance is the capacitance of the AFE plus the external capacitance.

ATTENTION: If the maximum capacitance is exceeded, component damage in AFE occurs.

Important Guidelines

Read and understand these guidelines:

- If drives **without** internal precharge are used and a disconnect is installed between the input of the drive and the DC bus, you must use an external precharge circuit between the disconnect and the DC input of the drive.
- If drives **with** internal precharge are used with a disconnect switch to the common bus, you must connect an auxiliary contact on the disconnect to a digital input of the drive. The corresponding input must be set to the 'Precharge Enable' option. This option provides the proper precharge interlock, guarding against possible damage to the drive when connected to a common DC bus.
- The precharge status of the AFE must be interlocked with the connected drives, such that the drives are disabled (not running) when the AFE is in a precharge state.

CE Conformity

Conformity with the Low Voltage (LV) Directive and Electromagnetic Compatibility (EMC) Directive has been demonstrated by using harmonized European Norm (EN) standards published in the Official Journal of the European Communities. PowerFlex Active Front End units comply with the EN standards listed here when installed according to this User Manual and the PowerFlex drive Reference Manual.

Declarations of Conformity are available online at this link:

http://www.rockwellautomation.com/certification/overview.page

Low Voltage Directive (2006/95/EC)

EN61800-5-1 Adjustable speed electrical power drive systems Part 5-1: Safety requirements – Electrical, thermal and energy.

EMC Directive (2004/108/EC)

EN61800-3 Adjustable speed electrical power drive systems Part 3: EMC product standard including specific test methods.

General Notes

- The AFE can cause radio frequency interference if used in a residential or domestic environment. You are required to take measures to help prevent interference, and follow the essential requirements for CE compliance listed here, if necessary.
- Conformity of the AFE with CE EMC requirements does not guarantee an entire machine or installation complies with CE EMC requirements. Many factors can influence total machine/installation compliance.

Essential Requirements for CE Compliance

Conditions 1...6 listed here must be satisfied for the PowerFlex Active Front End to meet the requirements of EN61800-3.

1. Use a standard PowerFlex Active Front End CE-compatible unit.
2. Review important precautions and attention statements throughout this document before installing the Active Front End.
3. Grounding as described on page 59.

4. Control (I/O) and signal wiring must be braided, shielded cable with a coverage of 75% or better, metal conduit, or have shielding/cover with equivalent attenuation.
5. All shielded cables must terminate with proper shielded connector.
6. Motor cables of DC input drives that are used with the AFE must be shielded cable wire with a coverage of 75% or more, or must be inside metal conduit or have shielding/cover with equivalent attenuation.

Notes:

Startup

This chapter describes how to start up the Active Front End. For a brief description of the HIM, see Appendix B.

Topic	Page
AFE in IP20 2500 MCC Style Enclosure	85
AFE in IP21 Rittal Enclosure	90

ATTENTION: Power must be applied to the Active Front End to perform the following start-up procedure. Some of the voltages present are at incoming line potential. To avoid electric shock hazard or damage to equipment, only qualified service personnel must perform the following procedure. Thoroughly read and understand the procedure before beginning. If an event does not occur while performing this procedure, **do not proceed**. **Remove power**, including user-supplied control voltages. User-supplied voltages can exist even when main AC power is not applied to the AFE. Correct the malfunction before continuing.

The basic start-up procedure must be performed when starting a new AFE to verify the condition of the unit, and to configure essential parameters for operating the AFE.

Names of the switches, push buttons, and status indicators are different for an AFE in an IP20 2500 MCC Style enclosure and an AFE in an IP21 Rittal enclosure. See the appropriate subsection for your enclosure.

AFE in IP20 2500 MCC Style Enclosure

This procedure requires that a HIM is installed. If an operator interface is not available, remote devices must be used to start up the AFE.

Startup Procedure

Before Applying Power to the AFE

1. Verify that the input circuit breaker is off.
2. Confirm that all wiring to the AFE (AC Input, ground, DC bus, and I/O) is connected to the correct AFE terminals and is secure.
3. Verify that AC line power at the disconnect device is within the rated value of the AFE.

4. Verify that the control power voltage is correct.
5. When DC disconnects are used for each inverter, verify that the disconnect levers for all inverters are set to off.
6. Set the REM-MAN-AUTO switch to MAN.
7. Set the OFF-ON-START switch to OFF.

Programming the AFE

1. Turn the AFE circuit breaker handle to on.
2. Set parameter 091 [Reset To Defaults] to the appropriate setting for your installation.

091	**[Reset to Defaults]** Resets parameters to default configurations except parameters 093 [Language] and 090 [Param Access Lvl]. 0 (ready) = A new value can be entered. 1 (factory) = Resets parameters to default configurations. 2 (low voltage) = Resets parameters to default configurations and configures parameters for a: – 400/480V AFE unit for 400V operation. – 600/690V AFE unit for 600V operation. 3 (high voltage) = Resets parameters to default configurations and configures parameters for a: – 400/480V AFE unit for 480V operation. – 600/690V AFE unit for 690V operation. **IMPORTANT:** The DC bus voltage must be present to set the voltage class.	Default:	0	Ready
		Options:	0	Ready
			1	Factory
			2	Low voltage
			3	High voltage

3. Use the HIM to enter the Assisted Start-up procedure.

Step	Example LCD Display
a. In the Main Menu, use the ▲ or ▼ key to scroll to 'Start Up'. b. Press the ↵ (Enter) key.	F-> Stopped Auto 0.0 Volt Main Menu: Memory Storage Start Up Preferences

Figure 41 - Active Front End Start-up Procedure Menu

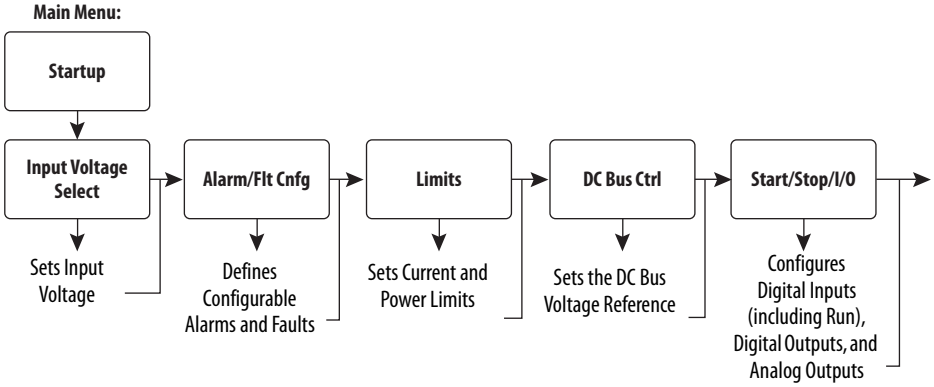

4. Enter the Input Voltage Selection in the Start-up Routine.

   Select the appropriate AC input voltage for your installation (480, for example). To accept each default setting, press Enter.

5. Enter the Alarm/Flt Cnfg selection.

   The Alarm/Flt Cnfg sets parameters 120 [Fault Config] and 135 [Alarm Config]. For basic applications, the default settings can be used. To accept each default setting, press Enter.

6. Enter the Limits section.

   For basic applications, the default settings for the parameters 75 [Motor Power Lmt], 76 [Regen Power Lmt], and 77 [Current Lmt Val] can be used. By default, [Regen Power Lmt] and [Current Lmt Val] are set to let maximum peak power flow from the DC bus to the AC line, and helps prevent DC bus overvoltage faults on the inverters. To accept each default setting, press Enter.

7. Enter the DC Bus Ctrl section of the Start-up routine.

   By default, the DC bus voltage reference is set to come from parameter 61 [DC Volt Ref]. With this setting, the DC Volt Ref is calculated based on the selected AC input voltage. For basic applications, this setting for the DC bus voltage reference is sufficient. To accept each default setting, press Enter.

8. Enter the Start/Stop/IO section.

   Parameters 221...225 [Digital In 1...5 Sel] and parameters 228, 229, and 233 [Digital Out 1...3 Sel] are set to run the AFE from the operator switches on the AFE door (see Figure 23 on page 45 for the typical I/O wiring diagram). To run the AFE through a network communication adapter, change digital input 1 from 'Run' to 'Not Used', and send a Start command through the communication adapter. (For DPI™ communication details, see DPI Communication Configurations on page 152.) To accept each default setting, press Enter. Analog outputs can also be programmed through this procedure if desired.

9. Disable the AFE output when the AFE is not active (not modulating).

   Connect the 'Inverter Enable' output of the AFE to the variable frequency drive enable input, or enable parameter 132 [Contact Off Cnfg] to force off the main contactor if there is a fault. This configuration makes sure that once the AFE stops modulating, there is no motoring current flowing through the AFE IGBT diodes. Failure to disable the AFE output can result in component damage or a reduction in product life.

   When enabling parameter 132, see page 109 for details. The AFE is shipped with parameter 132 disabled. This disabled parameter does not stop or shut down DC output when a fault occurs.

10. To complete the Assisted Start-up procedure, select Done/Exit.

Status Indicators

For information on AFE status indicators, see AFE Status on page 125.

Control Devices

Figure 42 shows the operators or control devices (switches, push buttons, and status indicators) on an IP20 2500 MCC Style enclosure.

Figure 42 - Control Devices for AFE in IP20 2500 MCC Style Enclosure

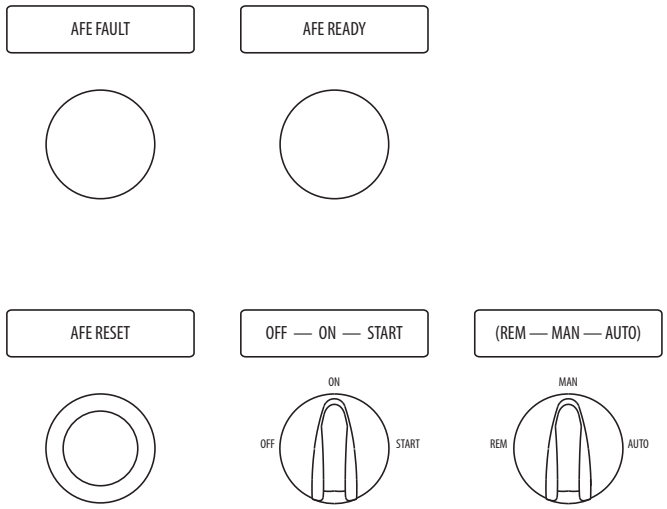

The AFE READY status indicator lights up when precharge is completed, the input contactor K1 is closed, AC power is connected to the AFE, and no faults are active. The AFE READY status indicator operates independent of the control method.

The AFE FAULT status indicator lights to indicate that the AFE is in a fault state.

In an overcurrent situation, the fault that caused the input circuit breaker (Q0) to trip must be identified and fixed before resetting the breaker.

Modes of Operation

There are three different modes in which the contactor and precharge can be controlled. The desired control is selected with the REM-AUTO-MAN selector switch.

1. **AUTO** – Automatic operation that precharges and closes the contactor when the supply voltage is energized.
   a. Set the REM-AUTO-MAN switch to AUTO.
   b. Set the OFF-ON-START switch to ON.

The precharging of the units starts when input power is present. When the DC bus voltage reaches its nominal value, the contactor closes.

To stop the AFE, turn the OFF-ON-START switch to OFF.

IMPORTANT Pressing the (Stop) key on the HIM only stops the AFE output – it does not open the input contactor to stop the AFE.

When a voltage drop or a blackout occurs in the supplying network, the unit precharges automatically and closes the input contactor when the main supply voltage returns.

2. **MAN** – Manual operation by the OFF-ON-START switch on the enclosure door.
   a. Set the REM-AUTO-MAN switch to MAN.
   b. Turn the OFF-ON-START switch to START and let it automatically return to ON.

      The precharging takes about 5...10 seconds depending on the connected DC bus capacitance. When the DC bus voltage has reached its nominal value, the AFE control closes the contactor.

      The precharging can be aborted by turning the switch to OFF.

      To stop the AFE, turn the OFF-ON-START switch to OFF.

IMPORTANT Pressing the (Stop) key on the HIM only stops the AFE output—it does not open the input contactor to stop the AFE.

When a voltage drop or a blackout occurs in the supplying network, the input contactor opens. To turn on the AFE, turn the OFF-ON-START switch to START and let it automatically return to ON.

3. **REM** – Remote operation with signals to the control terminals.
   a. Set the REM-AUTO-MAN switch to REM.
   b. Connect a normally closed (NC) contact to terminals X3:58 and X3:61.

      This contact has to be in the NC-state for the AFE to precharge and run. A remote pulse of 0.4...1.0 seconds duration, connected to terminals X3:57 and X3:60, starts the precharging of the AFE. When the DC voltage has reached its nominal value, the AFE unit automatically closes the input contactor.

      To stop the AFE, turn the OFF-ON-START switch to OFF.

IMPORTANT Pressing the (Stop) key on the HIM only stops the AFE output—it does not open the input contactor to stop the AFE.

When a voltage drop or a blackout occurs in the supplying network, the input contactor opens. When the supply is restored, the precharging must be reinitiated. To turn on the AFE, turn the OFF-ON-START switch to START and let it automatically return to ON.

AFE in IP21 Rittal Enclosure

This procedure requires that a HIM is installed. If an operator interface is not available, remote devices must be used to start up the AFE.

Startup Procedure

Before Applying Power to the AFE

1. Verify that the disconnect lever is pushed to off.
2. Confirm that all wiring to the AFE (AC Input, ground, DC bus, and I/O) is connected to the correct AFE terminals and is secure.
3. Verify that AC line power at the disconnect device is within the rated value of the AFE.
4. Verify that the control power voltage is correct.
5. When DC disconnects are used for each inverter, verify that the disconnect levers for all inverters are set to off.
6. Set the MCCB CONTROL switch to MAN.
7. Set the 0-1-START switch to 0 (off).

Programming the AFE

1. Push the AFE disconnect lever to on.
2. Set parameter 091 [Reset To Defaults] to the appropriate setting for your installation.

091	**[Reset to Defaults]** Resets parameters to default configurations except parameters 093 [Language] and 090 [Param Access Lvl]. 0 (ready) = A new value can be entered. 1 (factory) = Resets parameters to default configurations. 2 (low voltage) = Resets parameters to default configurations and configures parameters for a: – 400/480V AFE unit for 400V operation. – 600/690V AFE unit for 600V operation. 3 (high voltage) = Resets parameters to default configurations and configures parameters for a: – 400/480V AFE unit for 480V operation. – 600/690V AFE unit for 690V operation. **IMPORTANT:** The DC bus voltage must be present to set the voltage class.	Default:	0	Ready
		Options:	0	Ready
			1	Factory
			2	Low voltage
			3	High voltage

3. Use the HIM to enter the Assisted Start-up procedure.

Step	Example LCD Display
a. In the Main Menu, use the ▲ or ▼ key to scroll to 'Start Up'. b. Press the ↵ (Enter) key.	F-> Stopped Auto 0.0 Volt Main Menu: Memory Storage Start Up Preferences

See Figure 41 for the Active Front End start-up procedure.

4. Enter the Input Voltage Selection in the start-up routine.

   Select the appropriate AC input voltage for your installation (480, for example). To accept each default setting, press Enter.

5. Enter the Alarm/Flt Cnfg selection.

   The Alarm/Flt Cnfg sets parameters 120 [Fault Config] and 135 [Alarm Config]. For basic applications, the default settings can be used. To accept each default setting, press Enter.

6. Enter the Limits section.

   For basic applications, the default settings for the parameters 75 [Motor Power Lmt], 76 [Regen Power Lmt], and 77 [Current Lmt Val] can be used. By default, [Regen Power Lmt] and [Current Lmt Val] are set to let maximum peak power flow from the DC bus to the AC line. This power flow helps to prevent DC bus overvoltage faults on the inverters. To accept each default setting, press Enter.

7. Enter the DC Bus Ctrl section of the Start-up routine.

   By default, the DC bus voltage reference is set to come from parameter 61 [DC Volt Ref]. With this setting, the DC Volt Ref is calculated based on the selected AC input voltage. For basic applications, this setting for the DC bus voltage reference is sufficient. To accept each default setting, press Enter.

8. Enter the Start/Stop/IO section.

   Parameters 221...225 [Digital In 1...5 Sel] and parameters 228, 229, and 233 [Digital Out 1...3 Sel] are set to run the AFE from the operator switches on the AFE door (see Figure 40 on page 79 for the typical I/O wiring diagram). To run the AFE through a network communication adapter, change digital input 1 from 'Run' to 'Not Used', and send a Start command through the communication adapter. (For DPI communication details, see DPI Communication Configurations on page 152.) To accept each default setting, press Enter. Analog outputs can also be programmed through this procedure if desired.

9. Disable the AFE output when the AFE is not active (not modulating).

   Connect the 'Inverter Enable' output of the AFE to the variable frequency drive enable input, or enable parameter 132 [Contact Off Cnfg] to force off the main contactor if there is a fault. This configuration makes sure that once the AFE stops modulating, there is no motoring current flowing through the AFE IGBT diodes. Failure to disable the AFE output can result in component damage or a reduction in product life.

   When enabling parameter 132, see page 109 for details. The AFE is shipped with parameter 132 disabled. This disabled parameter does not stop or shut down DC output when a fault occurs.

10. To complete the Assisted Start-up procedure, select Done/Exit.

Status Indicators

For information on AFE status indicators, see AFE Status on page 125.

Control Devices

Figure 43 shows the operators or control devices (switches, push buttons, and status indicators) on an IP21 Rittal enclosure.

Figure 43 - Control Devices for AFE in IP21 Rittal Enclosure

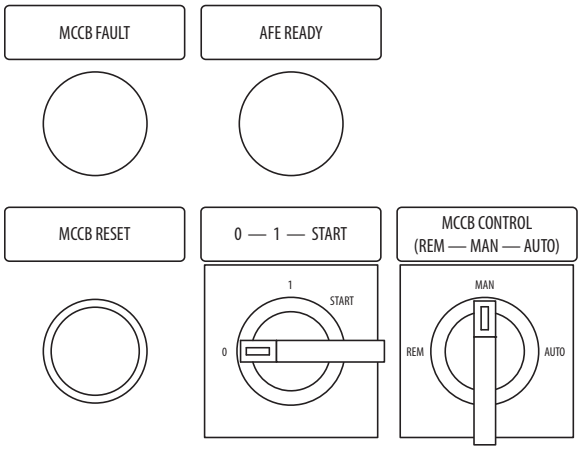

The AFE READY status indicator lights up when precharge is completed, the MCCB is closed, AC power is connected to the AFE, and no faults are active. The AFE READY status indicator operates independent of the control method.

The MCCB FAULT status indicator lights to indicate that the circuit breakers are in a tripped state.

In an overcurrent situation, the fault that caused the circuit breaker to trip must be identified and fixed before resetting the circuit breakers. The MCCB can be reset only by pressing the MCCB RESET push button when the MCCB CONTROL switch is in MAN.

MCCB (Motor-controlled Circuit Breaker) and Modes of Operation

There are three different modes in which the MCCB and precharge can be controlled. The desired control is selected with the MCCB CONTROL selector switch.

1. **AUTO** – Automatic operation that automatically precharges and closes the MCCB when the supply voltage is energized.
   a. Set the MCCB CONTROL switch to AUTO.
   b. Set the 0-1-START switch to 1 (on).

The precharging of the unit automatically starts when input power is present. When the DC Bus Voltage reaches its nominal value, the circuit breaker automatically closes.

To stop the AFE, turn the 0-1-START switch to 0 (off).

IMPORTANT Pressing the (Stop) key on the HIM only stops the AFE output—it does not open the MCCB to stop the AFE.

When a voltage drop or a blackout occurs in the supplying network, the unit precharges automatically and closes the circuit breakers when the main supply voltage returns.

2. **MAN** – Manual operation by the 0-1-START switch on the enclosure door.
   a. Set the MCCB CONTROL switch to MAN.
   b. Turn the 0-1-START switch to START and let it automatically return to 1.

      The precharging takes about 5...10 seconds depending on the connected DC bus capacitance. When the DC bus voltage has reached its nominal value, the AFE control automatically closes the circuit breaker.

      The precharging can be aborted by turning the switch to 0 (off).

      To stop the AFE, turn the 0-1-START switch to 0 (off).

IMPORTANT Pressing the (Stop) key on the HIM only stops the AFE output—it does not open the MCCB to stop the AFE.

When a voltage drop or a blackout occurs in the supplying network, the under voltage release coil opens the circuit breaker. To turn on the AFE, turn the 0-1-START switch to START and let it automatically return to 1 (on).

3. **REM** – Remote operation with signals to the control terminals.
   a. Set the MCCB CONTROL switch to REM.
   b. Connect a normally closed (NC) contact to terminals X1:58 and X1:61.

      This contact has to be in the NC-state for the AFE to precharge and run. A remote pulse of 0.4...1.0 seconds duration, connected to terminals X1:57 and X1:60, starts the precharging of the AFE. When the DC voltage has reached its nominal value, the AFE unit automatically closes the circuit breakers.

To stop the AFE, turn the 0-1-START switch to 0 (off).

IMPORTANT Pressing the (Stop) key on the HIM only stops the AFE output – it does not open the MCCB to stop the AFE.

When a voltage drop or a blackout occurs in the supplying network, the undervoltage release coil opens the circuit breaker. When the supply is restored, the precharging and MCCB closing must be reinitiated. To turn on the AFE, turn the 0-1-START switch to START and let it automatically return to 1 (on).

Programming and Parameters

This chapter provides a complete listing and description of the PowerFlex® Active Front End parameters. The parameters can be programmed (viewed or edited) by using a HIM. Alternatively, programming can be performed using a personal computer with a configuration tool such as Connected Components Workbench™ software, DriveExecutive™ software, or DriveExplorer™ software.

Topic	Page
About Parameters	95
How AFE Parameters are Organized	96
Monitor File	99
Dynamic Control File	101
Utility File	105
Communication File	111
Inputs and Outputs File	113
Parameter Cross Reference – by Name	117
Parameter Cross Reference – by Number	120

About Parameters

To configure the AFE to operate in a specific way, certain AFE parameters have to be configured appropriately. There are three types of parameters:

- **Numeric Parameters**

  These parameters have a numeric value (such as 1V AC).
- **ENUM Parameters**

  These parameters allow a selection from two or more items. The HIM displays a text message for each item.
- **Bit Parameters**

  These parameters have individual bits associated with features or conditions. If the bit is 0, the feature is off or the condition is false. If the bit is 1, the feature is on or the condition is true.

The following example table shows how each parameter type is presented in this manual.

Example Parameter Tables

File	Group	No.	Parameter Name and Description	Values
DYNAMIC CONTROL	Control Modes	040	**[Nom Input Volt]** Sets the incoming supply voltage level that is used to calculate the DC voltage level for charging control.	Default: Based on Unit Rating Min/Max: Based on Unit Rating Units: 1V AC
		046	**[Start/Stop Mode]** Selects the operating mode for the regenerative unit. 0 (Normal) = The converter starts only with a Run request. 1 (Auto) = The converter starts regenerative operation automatically whenever the DC voltage is higher than the DC voltage reference and stops when there is no regeneration. The converter starts by a Run or Start command. To avoid starting, a digital input can be configured to 'enable'. Auto mode selection is allowed only if an external motoring bus supply is installed.	Default: 0 Normal Options: 0 Normal 1 Auto
COMMUNICATION	Masks and Owners	154	**[Logic Mask]** Determines which communication adapters can control the unit. If the bit for an adapter is set to '0', the adapter has no control functions except for stop.	

Bit Definition											DPI Port 5	DPI Port 4	DPI Port 3	DPI Port 2	DPI Port 1	Digital In
Default	x	x	x	x	x	x	x	x	x	x	1	1	1	1	1	1
Bit	15	14	13	12	11	10	9	8	7	6	5	4	3	2	1	0

0 = Control Permitted
1 = Control Masked
x = Reserved

Description		
File – Lists the major parameter file category.		
Group – Lists the parameter group within a file.		
No. – Parameter number.	= Parameter value cannot be changed until the AFE is stopped. 32 = 32-bit parameter.	
Parameter Name and Description – Parameter name as it appears on a HIM, with a brief description of the parameter function.		
Values – Defines the various operating characteristics of the parameter. Three parameter types exist.		
ENUM	Default: Options:	Lists the value assigned at the factory. Read Only = no default. Displays the available programming selections.
Bit	Bit:	Lists the bit place holder and definition for each bit.
Numeric	Default: Min/Max: Units:	Lists the value assigned at the factory. Read Only = no default. The range (lowest and highest setting) possible for the parameter. Unit of measure and resolution as shown on the HIM.

How AFE Parameters are Organized

The HIM displays parameters in a File-Group-Parameter or Numbered List view order. To switch display mode, access the Main Menu, press the ALT key, and release it, and while the cursor is on the parameter selection, press the Sel key. In addition, parameter 090 [Param Access Lvl] can be set to display basic parameters (basic view) or all parameters (advanced view).

File-Group-Parameter Order

This organization groups parameters that are used for similar functions. The parameters are organized into files. Each file is divided into groups, and each group contains a set of parameters related to a specific purpose. By default, the HIM displays parameters by File-Group-Parameter view.

Basic Parameter View

Parameter 090 [Param Access Lvl] set to option '0' (Basic).

File	Group	Parameters					
Monitor	Metering	Input Voltage AC Line Freq Total Current	001 002 003	Active Current Reactive Current Input Current R	004 005 006	Input Current S Input Current T DC Bus Volt	007 008 011
	Converter Data	Rated kW Rated Volts	030 031	Rated Amps Control SW Ver	032 033		
Dynamic Control	Control Modes	Nom Input Volt Start/Stop Mode	040 046				
	Voltage Loop	DC Volt Ref Sel DC Volt Ref	060 061				
	Limits	Motor Power Lmt Regen Power Lmt	075 076	Current Lmt Val DC Bus Lo Alarm	077 078	DC Bus Hi Alarm	079
Utility	Converter Memory	Param Access Lvl Reset to Defaults Language	090 091 093	Voltage Class	094		
	Diagnostics	Start Inhibits Dig In Status Dig Out Status	100 102 103				
	Faults	Fault Config	120				
	Alarms	Alarm Config	135				
Inputs and Outputs	Analog Inputs	Anlg In Config Analog In 1 Hi Analog In 1 Lo	200 201 202	Analog In 2 Hi Analog In 2 Lo	204 205		
	Analog Outputs	Analog Out1 Sel Analog Out1 Hi Analog Out1 Lo	209 210 211	Analog Out2 Sel Analog Out2 Hi Analog Out2 Lo	212 213 214		
	Digital Inputs	Digital In1 Sel Digital In2 Sel Digital In3 Sel	221 222 223	Digital In4 Sel Digital In5 Sel Digital In6 Sel	224 225 226		
	Digital Outputs	Digital Out1 Sel Digital Out2 Sel Dig Out2 Invert	228 229 230	Digital Out3 Sel Dig Out3 Invert	233 234		

Advanced Parameter View

Parameter 090 [Param Access Lvl] set to option '1' (Advanced).

File	Group	Parameters					
Monitor	Metering	Input Voltage	001	I Imbalance	009	Heatsink Temp	017
		AC Line Freq	002	Ground Current	010	Cmd DC Volt	018
		Total Current	003	DC Bus Volt	011	Motoring MWh	019
		Active Current	004	DC Bus Current	012	Regen MWh	020
		Reactive Current	005	AC Line kW	013	Elapsed Run Time	021
		Input Current R	006	AC Line kVar	014	Analog In1 Value	022
		Input Current S	007	AC Line kVA	015	Analog In2 Value	023
		Input Current T	008	Power Factor	016		
	Converter Data	Rated kW	030	Rated Amps	032		
		Rated Volts	031	Control SW Ver	033		
Dynamic Control	Control Modes	Nom Input Volt	040	RatedLineCurrent	045	Auto Stop Level	049
		PWM Frequency	041	Start/Stop Mode	046	Contact On Delay	050
		Modulation Type	042	Restart Delay	047	Control Options	051
		Modulation Index	043	Stop Delay	048		
	Restart Modes	AutoRstrt Config	052	Auto Rstrt Tries	053	Auto Rstrt Delay	054
	Voltage Loop	DC Volt Ref Sel	060	DC Volt Kp	062		
		DC Volt Ref	061	DC Volt Ki	063		
	Current Loop	Active I Ref	064	Active I Ki	067	Reactive I Sel	070
		Reactive I Ref	065	Reactive I Kp	068		
		Active I Kp	066	Reactive I Ki	069		
	Limits	Motor Power Lmt	075	DC Bus Lo Alarm	078	DC Ref Hi Lmt	081
		Regen Power Lmt	076	DC Bus Hi Alarm	079	Ground I Lvl	082
		Current Lmt Val	077	DC Ref Lo Lmt	080		
	Parallel Mode	Droop	085	PWM Synch	086	Start Up Delay	087
Utility	Converter Memory	Param Access Lvl	090	Reset Meters	092	Voltage Class	094
		Reset To Defaults	091	Language	093		
	Diagnostics	Cnvrtr Status 1	095	Dig Out Status	103	Alarm 2 @ Fault	111
		Cnvrtr Status 2	096	Fault Frequency	104	Testpoint 1 Sel	112
		Cnvrtr Alarm 1	097	Fault Total Curr	105	Testpoint 1 Data	113
		Cnvrtr Alarm 2	098	Fault Bus Volts	106	Testpoint 2 Sel	114
		DC Ref Source	099	Fault Temp	107	Testpoint 2 Data	115
		Start Inhibits	100	Status 1 @ Fault	108	Cnvrtr OL Count	116
		Last Stop Source	101	Status 2 @ Fault	109		
		Dig In Status	102	Alarm 1 @ Fault	110		
	Faults	Fault Config	120	Fault 2 Code	125	Fault 3 Time	130
		Fault Clear	121	Fault 3 Code	126	Fault 4 Time	131
		Fault Clear Mode	122	Fault 4 Code	127	Contact Off Cnfg	132
		Power Up Marker	123	Fault 1 Time	128	Cnvrtr OL Factor	133
		Fault 1 Code	124	Fault 2 Time	129		
	Alarms	Alarm Config	135	Alarm 1 Code	137	Alarm 3 Code	139
		Alarm Clear	136	Alarm 2 Code	138	Alarm 4 Code	140
Communication	Comm Control	DPI Baud Rate	150	DPI Port Sel	152		
		Cnvrtr LogicRslt	151	DPI Port Value	153		
	Masks and Owners	Logic Mask	154	Stop Owner	156	Fault Clr Owner	158
		Fault Clr Mask	155	Start Owner	157		
	Datalinks	Data In A1	170	Data In D1	176	Data Out C1	184
		Data In A2	171	Data In D2	177	Data Out C2	185
		Data In B1	172	Data Out A1	180	Data Out D1	186
		Data In B2	173	Data Out A2	181	Data Out D2	187
		Data In C1	174	Data Out B1	182		
		Data In C2	175	Data Out B2	183		
Inputs and Outputs	Analog Inputs	Anlg In Config	200	Analog In 1 Loss	203	Analog In 2 Loss	206
		Analog In 1 Hi	201	Analog In 2 Hi	204		
		Analog In 1 Lo	202	Analog In 2 Lo	205		
	Analog Outputs	Anlg Out Config	207	Analog Out1 Lo	211	Anlg Out1 Scale	215
		Anlg Out Absolut	208	Analog Out2 Sel	212	Anlg Out2 Scale	216
		Analog Out1 Sel	209	Analog Out2 Hi	213	Anlg Out1 Setpt	217
		Analog Out1 Hi	210	Analog Out2 Lo	214	Anlg Out2 Setpt	218
	Digital Inputs	Digital In1 Sel	221	Digital In3 Sel	223	Digital In5 Sel	225
		Digital In2 Sel	222	Digital In4 Sel	224	Digital In6 Sel	226
	Digital Outputs	Dig Out Setpt	227	Dig Out2 OnTime	231	Dig Out3 OnTime	235
		Digital Out1 Sel	228	Dig Out2 OffTime	232	Dig Out3 OffTime	236
		Digital Out2 Sel	229	Digital Out3 Sel	233		
		Dig Out2 Invert	230	Dig Out3 Invert	234		

Monitor File

File	Group	No.	Parameter Name and Description	Values
MONITOR	Metering	001	**[Input Voltage]** Displays the incoming supply voltage, only when the AFE is in the Run state.	Default: Read Only Min/Max: 0.0/1000.0V AC Units: 0.1V AC
		002	**[AC Line Freq]** Displays the supply frequency. The sign indicates the phase order, only when the AFE is in the Run state.	Default: Read Only Min/Max: -63.0/63.0 Hz Units: 0.1 Hz
		003 32	**[Total Current]** Displays the total AC input current present at L1, L2, and L3 inputs.	Default: Read Only Min/Max: 0.0/[Rated Amps] x 2 Units: 0.1 Amps
		004 32	**[Active Current]** Displays the amount of AC input current that is in phase with the AC input fundamental voltage component. Positive value indicates motoring; negative value indicates regeneration.	Default: Read Only Min/Max: +/- [Rated Amps] x 2 Units: 0.1 Amps
		005 32	**[Reactive Current]** Displays the amount of AC input current that is out of phase with the AC input fundamental voltage component. Positive value indicates inductive current; negative value indicates capacitive current.	Default: Read Only Min/Max: +/- [Rated Amps] x 2 Units: 0.1 Amps
		006 007 008	**[Input Current R]** **[Input Current S]** **[Input Current T]** Displays the RMS value of the L1, L2, and L3 phase AC input current.	Default: Read Only Min/Max: 0.0/6553.5 Amps Units: 0.1 Amps
		009	**[I Imbalance]** Displays the current imbalance calculated between phases L1, L2, and L3. The RMS current for each phase is calculated by summing the instantaneous current squared as sampled at the PWM peak and valley, and then taking the square root of the sum every AC line cycle. The imbalance is then evaluated every AC line cycle by first finding the largest, smallest, and average phase current. Two equations are then used to calculate the value displayed: Based_on_Largest = (Largest - Average) x 100 / Average Based_on_Largest = (Largest - Average) x 100 / Average The equation that gives the higher value is used for the display.	Default: Read Only Min/Max: 0.0/100.0% Units: 0.1%
		010	**[Ground Current]** Displays the ground current measured by summing the three input phase currents.	Default: Read Only Min/Max: 0.0/[Rated Amps] x 2 Units: 0.1 Amps
		011	**[DC Bus Volt]** Displays the filtered DC bus voltage. The filter time constant is 32 milliseconds.	Default: Read Only Min/Max: 0.0/Based on Unit Rating Units: 0.1V DC
		012 32	**[DC Bus Current]** Displays the DC bus current. Positive value indicates motoring; negative value indicates regeneration.	Default: Read Only Min/Max: +/- Based on Unit Rating Units: 0.1 Amps
		013 32	**[AC Line kW]** Displays the real power on the AC side. Positive value indicates motoring; negative value indicates regeneration.	Default: Read Only Min/Max: +/- Based on Unit Rating Units: 0.1 kW
		014 32	**[AC Line kVar]** Displays the reactive power on the AC line.	Default: Read Only Min/Max: +/- Based on Unit Rating Units: 0.1 kVar
		015 32	**[AC Line kVA]** Displays the apparent power on the AC line.	Default: Read Only Min/Max: 0.0/Based on Unit Rating Units: 0.1 kVA
		016	**[Power Factor]** Displays the power factor. Positive value indicates motoring power; negative sign indicates regenerative power.	Default: Read Only Min/Max: +/-1.00 Units: 0.01
		017	**[Heatsink Temp]** Displays the measured heatsink temperature.	Default: Read Only Min/Max: 0/200 °C Units: 1 °C

File	Group	No.	Parameter Name and Description	Values
MONITOR	Metering	018	**[Cmd DC Volt]** Displays the commanded DC bus voltage reference.	Default: Read Only Min/Max: 0.0/1500.0V DC Units: 0.1V DC
		019 32	**[Motoring MWh]** Displays the accumulated motoring MWh. This parameter can be reset with parameter 092 [Reset Meters].	Default: Read Only Min/Max: 0.0/429496729.5 MWh Units: 0.1 MWh
		020 32	**[Regen MWh]** Displays the accumulated regenerative MWh fed back to the AC line. This parameter can be reset with parameter 092 [Reset Meters].	Default: Read Only Min/Max: 0.0/429496729.5 MWh Units: 0.1 MWh
		021 32	**[Elapsed Run Time]** Displays the accumulated amount of time that the AFE has been in Run. This parameter can be reset with parameter 092 [Reset Meters].	Default: Read Only Min/Max: 0.0/214748364.0 Hr Units: 0.1 Hr
		022 023	**[Analog In1 Value]** **[Analog In2 Value]** Displays the value of the signal at the analog inputs.	Default: Read Only Min/Max: 0.000/20.000 mA or -/+10.000V Units: 0.001 mA or 0.001V
	Converter Data	030 32	**[Rated kW]** Displays the nominal power rating of the AFE.	Default: Read Only Min/Max: 0.00/3000.00 kW Units: 0.01 kW
		031	**[Rated Volts]** Displays the nominal input voltage class (400V, 480V, 600V, or 690V) of the AFE.	Default: Read Only Min/Max: 0.0/1000.0V AC Units: 0.1V AC
		032	**[Rated Amps]** Displays the nominal AC input current rating of the AFE.	Default: Read Only Min/Max: 0.0/6553.5 Amps Units: 0.1 Amps
		033	**[Control SW Ver]** Displays the software version of the main control board of the AFE.	Default: Read Only Min/Max: 0.000/255.255 Units: 0.001

Dynamic Control File

File	Group	No.	Parameter Name and Description	Values
DYNAMIC CONTROL	Control Modes	040	**[Nom Input Volt]** Sets the incoming supply voltage level. It is used to calculate the DC voltage level for charging control.	Default: Based on Unit Rating Min/Max: Based on Unit Rating Units: 1V AC
		041	**[PWM Frequency]** Sets the carrier frequency for the PWM output. This frequency is fixed to 3.6 kHz, and cannot be changed due to the LCL filter.	Default: 3.6 kHz Min/Max: 3.0/16.0 kHz Units: 0.1 kHz
		042	**[Modulation Type]** Selects the modulation type. 0 (HW Modulator) = ASIC modulator with the classical third harmonic injection. The current distortion is lower and spectrum is slightly better compared to the Software Modulator. 1 (Software 1) = Symmetric vector modulator with symmetrical zero vectors. Current distortion is less than with software modulator 2 if boosting is used. 2 (Software 2) = Symmetric BusClamp, in which one switch always conducts 60° either to negative or positive DC-rail. Switching losses are reduced compared to the modulation type 0 and 1, and spectrum is narrow. 3 (Software 3) = Unsymmetrical BusClamp, in which one switch always conducts 120° to negative DC-rail to reduce switching losses. Drawback is that upper and lower switches are unevenly loaded and spectrum is wide. We recommend using the Software 2 setting. For AFE parallel operation, the Software 3 setting in all AFEs must be used.	Default: 2 Software 2 Options: 0 HW Modulator 1 Software 1 2 Software 2 3 Software 3
		043	**[Modulation Index]** Sets the modulation index limit. The default setting of modulation index is 100%. To get the maximum 1 minute overload current (ND/HD), adjust the modulation index from 100% to 120%. However, this adjustment affects the modulated output voltage and current waveform (THD) during overload operation.	Default: 100% Min/Max: 20/200% Units: 1%
		045	**[RatedLineCurrent]** Sets the rated current of the supply transformer. This parameter can be set if the AFE is oversized compared to the supply or feeding transformer capacity.	Default: Unit Current Min/Max: 0.0/6553.5 Amps Units: 1.0 Amps
		046	**[Start/Stop Mode]** Selects the operating mode for the AFE. 0 (Normal) = The AFE starts only with the Run request by a RUN or START command. 1 (Auto) = The AFE starts regenerative operation automatically whenever the DC bus voltage is higher than the DC voltage reference, and stops when there is no regeneration. To avoid starting, a digital input can be configured to 'Enable', and turning off the digital input stops the automatic starting.	Default: 0 Normal Options: 0 Normal 1 Auto
		047	**[Restart Delay]** Sets the minimum time between a previous stop command and the next start request to start the AFE. This parameter takes effect only if parameter 46 [Start/Stop Mode] is set to '0' (Normal).	Default: 220 ms Min/Max: 0/32000 ms Units: 1 ms
		048	**[Stop Delay]** Sets the off time delay between the removal of a Run request and stopping the modulation. This parameter takes effect only if parameter 046 [Start/Stop Mode] is set to '1' (Auto). The converter stops modulating after [Stop Delay] when the converter changes from regenerative to motoring mode and the DC bus voltage is at least 3% below the DC voltage reference.	Default: 100 ms Min/Max: 0/32000 ms Units: 1 ms
		049	**[Auto Stop Level]** Sets the active current level for the Auto operation mode when parameter 046 [Start/Stop Mode] is set to '1' (Auto). When the active current value is higher than this value, the regeneration stops.	Default: -3.0% Min/Max: -100.0/100.0% Units: 1.0%
		050	**[Contact On Delay]** Sets the Main contactor on delay time (the delay from Main contactor acknowledge to modulation start).	Default: 0.40 secs Min/Max: 0.00/10.00 secs Units: 0.01 secs

File	Group	No.	Parameter Name and Description	Values
DYNAMIC CONTROL	Control Modes	051	**[Control Options]** A set of bits to select AFE control options to disable different harmonic compensation.	

Bit Definition				DC Ref Follow						5th Comp Off						
Default	x	x	x	x	x	x	x	x	x	x	1	x	x	x	x	x
Bit	15	14	13	12	11	10	9	8	7	6	5	4	3	2	1	0

1 = Condition True
0 = Condition False
x = Reserved

- Bit 5 (5th Comp Off) – Disables 5th harmonic elimination when Bit 5 = 1.
- Bit 12 (DC Ref Follow) – Allows the DC Voltage Reference to follow the AC Input Voltage if the input voltage is rising when Bit 12 = 1. In this case, the DC Bus Voltage Ref = P1 [Input Voltage] x P61 [DC Volt Ref] P40 [Nom Input Voltage]. However, the following limits apply to tracking the DC voltage Reference:
  Low Limit: Parameter 1 [Input Voltage] x 1.35 x 1.05 for all units
  High Limit: Parameter 40 [Nom Input Voltage] x 1.35 x 1.30 for 400V/480V units
  Parameter 40 [Nom Input Voltage] x 1.35 x 1.15 for 600V/690V units

Restart Modes	052	**[AutoRstrt Config]** Selects the faults cleared by the auto restart function. Parameter 053 [AutoRstrt Tries] sets the attempt numbers.	

Bit Definition								LCL OverTemp	HeatsinkUndTp	Anlg In Loss	Ground Fault	AC OverCurr	IGBTOverTemp	DC OverVolt	DC UnderVolt	Auxiliary In
Default	x	x	x	x	x	x	x	0	0	0	0	1	0	1	0	1
Bit	15	14	13	12	11	10	9	8	7	6	5	4	3	2	1	0

1 = Condition True
0 = Condition False
x = Reserved

	053	**[Auto Rstrt Tries]** Sets the maximum number of times the AFE attempts to reset a configured fault and restart. 0 = No automatic restarting after fault trip.	Default: 0 Min/Max: 0/10 Units: None
	054	**[Auto Rstrt Delay]** Sets the time between restart attempts when parameter 053 [Auto Rstrt Tries] is set to a value other than zero.	Default: 1.0 sec Min/Max: 0.5/30.0 sec Units: 0.1 sec
Voltage Loop	060	**[DC Volt Ref Sel]** Selects the source of the DC bus voltage reference to the AFE.	Default: 0 DC Volt Ref Options: 0 DC Volt Ref 1 Analog In1 2 Analog In2 3 DPI Port 1 4 DPI Port 2 5 DPI Port 3 6 DPI Port 4 7 DPI Port 5
	061	**[DC Volt Ref]** Sets the DC voltage reference. Used when parameter 060 [DC Volt Ref Sel] is set to '0' (DC Volt Ref).	Default: Parameter 031 [Rated Volts] x 1.35 x 1.1 Min: [Rated Volts] x 1.35 x 1.05 Max: [Rated Volts] x 1.35 x 1.3 (for 400/480V units) Units: [Rated Volts] x 1.35 x 1.15 (for 600/690V units) 0.1V DC
	062	**[DC Volt Kp]** Sets the proportional gain for the bus regulator to adjust regulator response.	Default: 200 Min/Max: 0/10000 Units: None
	063	**[DC Volt Ki]** Sets the voltage loop integral gain for responsiveness of the bus regulator.	Default: 0.0040 sec Min/Max: 0.0000/6.0000 sec Units: 0.0001 sec

File	Group	No.	Parameter Name and Description	Values
DYNAMIC CONTROL	Current Loop	064	**[Active I Ref]** Displays the active current reference.	Default: Read Only Min/Max: +/- 3200.0 Amp Units: 0.1 Amp
		065	**[Reactive I Ref]** If selected by [Reactive I Sel], this parameter sets the reference for the reactive current. This parameter can be used for power factor correction of the power system. Positive value gives inductive current; negative value gives capacitive current. The maximum reactive current is limited by the following formula: $\text{Maximum Reactive I Ref} = \sqrt{\text{P032 [Rated Amps]}^2 - \text{P004 [Active Current]}^2}$	Default: 0.0 Amp Min/Max: +/- Based on parameter 032 [Rated Amps] Units: 0.1 Amp
		066	**[Active I Kp]** Sets the active current controller gain.	Default: 400 Min/Max: 0/4000 Units: None
		067	**[Active I Ki]** Sets the integral gain of the active current controller.	Default: 0.0266 sec Min/Max: 0.0000/6.0000 sec Units: 0.0001 sec
		068	**[Reactive I Kp]** Sets the synchronization controller gain.	Default: 2000 Min/Max: 0/32000 Units: None
		069	**[Reactive I Ki]** Sets the integral of the synchronization controller.	Default: 0.040 sec Min/Max: 0.000/20.000 sec Units: 0.001 sec
		070	**[Reactive I Sel]** Selects the source from which the reactive current is taken.	Default: 0 React I Ref Options: 0 React I Ref 1 Analog In1 2 Analog In2
	Limits	075	**[Motor Power Lmt]** Sets the limit for motoring power on the AC line.	Default: 300.0% Min/Max: 0.1/300.0% Units: 0.1%
		076	**[Regen Power Lmt]** Sets the limit for regenerative power allowed to the AC line.	Default: -300.0% Min/Max: -0.1/-300.0% Units: 0.1%
		077	**[Current Lmt Val]** Sets the current limit value.	Default: 1.5 x [Rated Amps] Min/Max: 0.0/Based on Unit Rating Units: 0.1 Amps
		078	**[DC Bus Lo Alarm]** Sets the lowest acceptable DC bus voltage for the application. A warning is indicated if the DC bus voltage falls below the value of this parameter.	Default: Based on Unit Rating Min/Max: 0.0/2000.0V DC Units: 0.1V DC
		079	**[DC Bus Hi Alarm]** Sets the highest acceptable DC bus voltage for the application. A warning is indicated if the DC bus voltage exceeds the value of this parameter.	Default: Based on Unit Rating Min/Max: 0.0/2000.0V DC Units: 0.1V DC
		080	**[DC Ref Lo Lmt]** Displays the limit value of the DC bus reference low limitation, which is calculated based on the voltage class x 1.35 x 1.05.	Default: Read Only Min/Max: 0.0/1500.0V DC Units: 0.1V DC
		081	**[DC Ref Hi Lmt]** Displays the limit value of the DC bus reference high limitation. This limit is calculated based on the voltage class x 1.35 x 1.3 (for 400/480V units) or voltage class x 1.35 x 1.15 (for 600/690V units).	Default: Read Only Min/Max: 0.0/1500.0V DC Units: 0.1V DC
		082	**[Ground I Lvl]** Sets the limit value of ground current in % of the unit rating before a ground current alarm or fault is activated. For AFE parallel operation, the values in all AFEs must be set to 100%.	Default: 50.0% Min/Max: 0.0/100.0% Units: 0.1% (Based on unit rating)

File	Group	No.	Parameter Name and Description	Values
DYNAMIC CONTROL	Parallel Mode	085	**[Droop]** Sets the droop as % of active current reference for current balancing when AFEs are used in parallel independent mode. It affects DC bus voltage if enabled. Recommended value for parallel AFEs is 5%.	Default: 0.00% Min/Max: 0.00/100.00% Units: 0.01%
		086	**[PWM Synch]** Sets synchronization to reduce the circulating current between parallel connected AFEs when they are connected to the same DC bus and are fed from the same incoming power source without an isolation transformer. In this case, parameter 085 [Droop] must be set to 5% in all AFEs, and this parameter 086 [PWM Synch] must be set to '1' (Enabled).	Default: 0 Disabled Options: 0 Disabled 1 Enabled
		087	**[Start Up Delay]** Sets a starting delay when Run command is given. When programming different delay to parallel AFEs, the AFEs start in sequence.	Default: 0.00 sec Min/Max: 0.00/300.00 sec Units: 0.01 sec

Utility File

File	Group	No.	Parameter Name and Description	Values
UTILITY	Converter Memory	090	**[Param Access Lvl]** Selects the parameter display level. 0 (Basic) = Reduced parameter set. 1 (Advanced) = Full parameter set.	Default: 0 Basic Options: 0 Basic 1 Advanced
		091	**[Reset to Defaults]** Resets parameters to factory defaults except parameters 093 [Language] and 090 [Param Access Lvl]. 0 (Ready) = A new value can be entered. 1 (Factory) = Resets parameters to factory defaults. 2 (Low Voltage) = Resets parameters to factory defaults and configures parameters for a: – 400/480V AFE unit for 400V operation. – 600/690V AFE unit for 600V operation. 3 (High Voltage) = Resets parameters to factory defaults and configures parameters for a: – 400/480V AFE unit for 480V operation. – 600/690V AFE unit for 690V operation. **IMPORTANT:** The DC bus voltage must be present to set the voltage class.	Default: 0 Ready Options: 0 Ready 1 Factory 2 Low Voltage 3 High Voltage
		092	**[Reset Meters]** Resets these selected meters (Motoring MWh, Regen MWh, and Elapsed Time) to zero.	Default: 0 Ready Options: 0 Ready 1 Motoring MWh 2 Regen MWh 3 Elapsed Time
		093	**[Language]** Limited to English language only.	Default: 0 Not Selected Options: 0 Not Selected 1 English
		094	**[Voltage Class]** Displays the last 'Reset To Defaults' operation.	Default: Read Only Options: 0 = Low Voltage 1 = High Voltage
	Diagnostics	095	**[Cnvrtr Status 1]** Displays the present operating condition of the AFE.	Read Only

Bit Definition		DCVoltRefD2	DCVoltRefD1	DCVoltRefD0	Cmd Delayed	Regen CurLim	Mot CurLim	At Reference	Faulted	Alarm	Droop Active	In Precharge	Regenerating	Motoring	Active	Ready
Default	x	0	0	0	0	0	0	0	0	0	0	0	0	0	0	0
Bit	15	14	13	12	11	10	9	8	7	6	5	4	3	2	1	0

1 = Condition True
0 = Condition False
x = Reserved

Bits			Description
14	13	12	
0	0	0	DC Volt Ref
0	0	1	Analog In1
0	1	0	Analog In2
0	1	1	DPI Port 1
1	0	0	DPI Port 2
1	0	1	DPI Port 3
1	1	0	DPI Port 4
1	1	1	DPI Port 5

- Bit 0 (Ready) indicates all inhibits are cleared.
- Bit 1 (Active) indicates that the AFE is modulating.
- Bit 2 (Motoring) indicates that the AFE is running in Motoring mode.
- Bit 3 (Regenerating) indicates that the AFE is regenerating power to the AC line.
- Bit 4 (In Precharge) indicates that the AFE is in precharging status.
- Bit 5 (Droop Active) indicates that the droop function for AFE paralleling is activated.
- Bit 6 (Alarm) indicates that the AFE has detected an alarm.
- Bit 7 (Faulted) indicates that the AFE has detected a fault.
- Bit 8 (At Reference) indicates that the DC bus voltage is at the command value.
- Bit 9 (Mot CurLim) indicates that the AFE exceeds the current limit in Motoring mode.
- Bit 10 (Regen CurLim) indicates that the AFE exceeds the current limit in regenerative mode.
- Bit 11 (Cmd Delayed) indicates pending start command.
- Bits 12…14 indicate the DC bus voltage reference selection.

File	Group	No.	Parameter Name and Description	Values
UTILITY	Diagnostics	096	**[Cnvrtr Status 2]** Displays the present operating condition of the AFE and active source.	Read Only

Bit Definition			DPI at 500k				AutoRst Act	AutoRst Ctdn						ModIndexLim	Active	Ready
Default	x	x	0	x	x	x	0	0	x	x	x	x	x	0	0	0
Bit	15	14	13	12	11	10	9	8	7	6	5	4	3	2	1	0

1 = Condition True
0 = Condition False
x = Reserved

- Bit 0 (Ready) indicates all inhibits are cleared.
- Bit 1 (Active) indicates that the AFE is modulating.
- Bit 2 (ModIndexLim) indicates that the AFE reached the modulation index limitation.
- Bit 8 (AutoRst Ctdn) indicates that the auto restart timer is counting down.
- Bit 9 (AutoRst Act) indicates that the auto restart function is activated.
- Bit 13 (DPI at 500k) indicates DPI communication with 500k of baud rate.

File	Group	No.	Parameter Name and Description	Values
UTILITY	Diagnostics	097	**[Cnvrtr Alarm 1]** Displays alarm conditions that presently exist in the unit.	Read Only

Bit Definition						Overload	DCBusHiAlarm	DCBusLoAlarm	DCRefHighLim	DCRefLowLim	LCL Fan Stop	HeatsinkOvTp	LineSyncFail	Anlg In Loss	DC UnderVolt	Prechrg Actv
Default	x	x	x	x	x	1	1	1	1	1	1	1	1	1	1	1
Bit	15	14	13	12	11	10	9	8	7	6	5	4	3	2	1	0

1 = Condition True
0 = Condition False
x = Reserved

- Bit 0 (Prechrg Actv) indicates that precharging is not completed.
- Bit 1 (DC UnderVolt) indicates that the DC link voltage exceeded the limit.
- Bit 2 (Anlg In Loss) indicates the analog input loss.
- Bit 3 (LineSync Fail) indicates that the AC input line phase is missing.
- Bit 4 (HeatsinkOv Tp) indicates that the heatsink temperature is over temperature (90 °C [194 °F]).
- Bit 5 (LCL Fan Stop) indicates that the LCL fan has been stopped.
- Bit 6 (DCRefLowLim) indicates that the DC voltage reference is less than the limit in parameter 080 [DC Ref Lo Lmt].
- Bit 7 (DCRefHighLim) indicates that the DC voltage reference exceeds the limit in parameter 081 [DC Ref Hi Lmt].
- Bit 8 (DCBusLo Alarm) indicates that the DC voltage is less than the value set by parameter 078 [DC Bus Lo Alarm].
- Bit 9 (DCBusHi Alarm) indicates that the DC voltage exceeds the value set by parameter 079 [DC Bus Hi Alarm].
- Bit 10 (Overload) indicates that parameter 003 [Total Current] exceeds the rated current.

File	Group	No.	Parameter Name and Description	Values
UTILITY	Diagnostics	098	**[Cnvrtr Alarm 2]** Displays alarm conditions that presently exist in the unit.	Read Only

Bit Definition															Contact Fdbk	DigInConflict
Default	x	x	x	x	x	x	x	x	x	x	x	x	x	x	0	0
Bit	15	14	13	12	11	10	9	8	7	6	5	4	3	2	1	0

1 = Condition True
0 = Condition False
x = Reserved

- Bit 0 (DigInConflict) indicates that there is a conflict with the digital input settings.
- Bit 1 (Contact Fdbk) indicates that there is no feedback from the main contact.

File	Group	No.	Parameter Name and Description	Values		
UTILITY	Diagnostics	099	**[DC Ref Source]** Displays the source of the DC bus voltage reference to the unit.	Default:		Read Only
				Options:	0	DC Volt Ref
					1	Analog In1
					2	Analog In2
					3	DPI Port 1
					4	DPI Port 2
					5	DPI Port 3
					6	DPI Port 4
					7	DPI Port 5

File	Group	No.	Parameter Name and Description	Values
UTILITY	Diagnostic	100	**[Start Inhibits]** Displays the inputs presently preventing the AFE from starting.	Read Only
		101	**[Last Stop Source]** Displays the source that initiated the most recent stop sequence. It will be cleared (set to zero) during the next start sequence.	Default: Read Only Options: 0 Pwr Removed 1…5 DPI Port 1…5 6 Reserved 7 Digital In 8 Fault 9 Not Enabled
		102	**[Dig In Status]** Displays the status of the digital inputs.	Read Only
		103	**[Dig Out Status]** Displays the status of the digital outputs.	Read Only
		104	**[Fault Frequency]** Captures and displays the AC line frequency at the time of the last fault.	Default: Read Only Min/Max: -63.0/63.0 Hz Units: 0.1 Hz
		105	**[Fault Total Curr]** Captures and displays the DC bus amps at the time of the last fault.	Default: Read Only Min/Max: 0.0/[Rated Amps] x 2 Units: 0.1 Amps
		106	**[Fault Bus Volts]** Captures and displays the DC bus voltage at the time of the last fault.	Default: Read Only Min/Max: 0/Max Bus Volts Units: 1V DC
		107	**[Fault Temp]** Captures and displays the heatsink temperature at the time of the last fault.	Default: Read Only Min/Max: 0/200 °C Units: 1 °C

Bit Definition			DPI Port 5	DPI Port 4	DPI Port 3	DPI Port 2	DPI Port 1			Startup Actv	Params Reset	Stop Assertd	DC Bus Pchrg	Enable	Type 2 Alarm	Fault
Default	x	x	0	0	0	0	0	x	x	0	0	0	0	0	0	0
Bit	15	14	13	12	11	10	9	8	7	6	5	4	3	2	1	0

1 = Inhibit True
0 = Inhibit False
x = Reserved

- Bit 0 (Fault) is set when the AFE is faulted.
- Bit 1 (Type 2 Alarm) is set when the AFE has an alarm of type 2.
- Bit 2 (Enable) is set when the AFE is not enabled.
- Bit 3 (DC Bus Pchrg) is set when the AFE is in precharging.
- Bit 4 (Stop Assertd) is set when a stop command is asserted.
- Bit 5 (Params Reset) is set when parameter 091 [Reset To Defaults] is reset to defaults.
- Bit 6 (Startup Actv) is set when the AFE is in startup sequencing.
- Bits 9…13 indicate that the AFE start is inhibited by the respective DPI port.

Bit Definition											Digital In6	Digital In5	Digital In4	Digital In3	Digital In2	Digital In1
Default	x	x	x	x	x	x	x	x	x	x	0	0	0	0	0	0
Bit	15	14	13	12	11	10	9	8	7	6	5	4	3	2	1	0

1 = Input Present
0 = Input Not Present
x = Reserved

Bit Definition														DigitalOut 3	DigitalOut 2	DigitalOut 1
Default	x	x	x	x	x	x	x	x	x	x	x	x	x	0	0	0
Bit	15	14	13	12	11	10	9	8	7	6	5	4	3	2	1	0

1 = Output Present
0 = Output Not Present
x = Reserved

File	Group	No.	Parameter Name and Description	Values
UTILITY	Diagnostic	108	**[Status 1 @ Fault]** Captures and displays the bit pattern of parameter 095 [Cnvrtr Status 1] at the time of the last fault.	Read Only
		109	[Status 2 @ Fault] Captures and displays the bit pattern of parameter 096 [Cnvrtr Status 2] at the time of the last fault.	Read Only
		110	**[Alarm 1 @ Fault]** Captures and displays the bit pattern of parameter 097 [Cnvrtr Alarm 1] at the time of the last fault.	Read Only
		111	**[Alarm 2 @ Fault]** Captures and displays the bit pattern of parameter 098 [Cnvrtr Alarm 2] at the time of the last fault.	Read Only
		112	**[Testpoint 1 Sel]** Selects the function whose value is displayed in parameter 113 [Testpoint 1 Data]. These internal values are not accessible through parameters.	Default: 499 Min/Max: 0/65535 Units: None
		113	**[Testpoint 1 Data]** Displays the present value of the function selected in parameter 112 [Testpoint 1 Sel].	Default: Read Only Min/Max: -/+32767 Units: None
		114	**[Testpoint 2 Sel]** Selects the function whose value is displayed in parameter 115 [Testpoint 2 Data]. These internal values are not accessible through parameters.	Default: 499 Min/Max: 0/65535 Units: None
		115	**[Testpoint 2 Data]** Displays the present value of the function selected in parameter 114 [Testpoint 2 Sel].	Default: Read Only Min/Max: -/+32767 Units: None
		116	**[Cnvrtr OL Count]** Displays the accumulated percentage of AFE overload. Continuously operating the AFE over the set level increases this value to 100% and cause an AFE fault.	Default: Read Only Min/Max: 0.1%/+100.0% Units: 0.1%

108 Bit Definition

Bit Definition		DCVoltRefD2	DCVoltRefD1	DCVoltRefD0	Cmd Delayed	Regen CurLim	Mot CurLim	At Reference	Faulted	Alarm	Droop Active	In Precharge	Regenerating	Motoring	Active	Ready
Default	x	0	0	0	0	0	0	0	0	0	0	0	0	0	0	0
Bit	15	14	13	12	11	10	9	8	7	6	5	4	3	2	1	0

1 = Condition True
0 = Condition False
x = Reserved

Bits 14	Bits 13	Bits 12	Description
0	0	0	DC Volt Ref
0	0	1	Analog In1
0	1	0	Analog In2
0	1	1	DPI Port 1
1	0	0	DPI Port 2
1	0	1	DPI Port 3
1	1	0	DPI Port 4
1	1	1	DPI Port 5

109 Bit Definition

Bit Definition			DPI at 500 k				AutoRst Act	AutoRst Ctdn						ModIndexLim	Active	Ready
Default	x	x	0	x	x	x	0	0	x	x	x	x	x	0	0	0
Bit	15	14	13	12	11	10	9	8	7	6	5	4	3	2	1	0

1 = Condition True
0 = Condition False
x = Reserved

110 Bit Definition

Bit Definition						Overload	DCBusHiAlarm	DCBusLoAlarm	DCRefHighLim	DCRefLowLim	LCL Fan Stop	HeatsinkOvTp	LineSyncFail	Anlg In Loss	DC UnderVolt	Prechrg Actv
Default	x	0	x	0	0	0	0	0	0	0	0	0	0	0	0	0
Bit	15	14	13	12	11	10	9	8	7	6	5	4	3	2	1	0

1 = Condition True
0 = Condition False
x = Reserved

111 Bit Definition

Bit Definition															Contact Fdbk	DigInConflct
Default	x	x	x	x	x	x	x	x	x	x	x	0	x	x	0	0
Bit	15	14	13	12	11	10	9	8	7	6	5	4	3	2	1	0

1 = Condition True
0 = Condition False
x = Reserved

File	Group	No.	Parameter Name and Description	Values
UTILITY	Faults	120	**[Fault Config]** Enables/disables annunciation of the listed faults.	

Bit Definition											AutoResetLim	Overload	LineSyncFail		DC UnderVolt	
Default	x	x	x	x	x	x	x	x	x	x	0	0	0	x	0	x
Bit	15	14	13	12	11	10	9	8	7	6	5	4	3	2	1	0

1 = Enabled
0 = Disabled
x = Reserved

No.	Parameter Name and Description	Values
121	**[Fault Clear]** Resets a fault and clears the fault queue. 0 (Ready) = A new value can be entered. 1 (Clear Faults) = A fault is reset. 2 (Clr Fault Que) = The fault queue is cleared.	Default: 0 Ready Options: 0 Ready 1 Clear Faults 2 Clr Fault Que
122	**[Fault Clear Mode]** Enables/disables a fault reset (clear faults) attempt from any source. This mode does not apply to fault codes that are cleared indirectly through other actions.	Default: 1 Enabled Options: 0 Disabled 1 Enabled
123 32	**[Power Up Marker]** Displays the elapsed hours since initial AFE power-up. This value rolls over to '0' after the AFE has been powered on for more than the maximum value shown. For relevance to most recent power-up, see parameters 128…131 [Fault x Time].	Default: Read Only Min/Max: 0.0000/429496.7295 Hr Units: 0.0001 Hr
124 126 128 130	**[Fault 1 Code]** **[Fault 2 Code]** **[Fault 3 Code]** **[Fault 4 Code]** Displays a code that represents the fault that tripped the AFE. The codes appear in these parameters in the order they occur (parameter 124 [Fault 1 Code] = the most recent fault).	Default: Read Only Min/Max: 0/65535 Units: None
125 127 129 131 32	**[Fault 1 Time]** **[Fault 2 Time]** **[Fault 3 Time]** **[Fault 4 Time]** Displays the time between initial AFE power-up and the occurrence of the associated trip fault. The time that is shown by these parameters can be compared to parameter 123 [Power Up Marker] for the time from the most recent power-up. Therefore, [Fault x Time] - [Power Up Marker] = Time difference to the most recent power-up. A negative value indicates that the fault occurred before the most recent power-up. A positive value indicates that the fault occurred after the most recent power-up.	Default: Read Only Min/Max: 0.0000/429496.7295 Hr Units: 0.0001 Hr
132	**[Contact Off Cnfg]** Configures faults that force the main contactor off in case of fault. This configuration is only possible if the precharge contactor is off or controlled over the network (digital output selection) and the AFE is supplied by an external 24V DC power supply. This configuration provides an option to protect the AFE when the AFE is faulted, modulating is stopped, and the motoring current can still flow through the IGBT diode.	

Bit Definition							All Fault	LCL OverTemp	HeatsinkOvTp	Overload		AC OverCurr	IGBTOverTemp	DC OverVolt		Auxiliary In
Default	x	x	x	x	x	x	0	0	0	0	x	0	0	0	x	0
Bit	15	14	13	12	11	10	9	8	7	6	5	4	3	2	1	0

1 = Enabled Contactor Off command from fault*
0 = Disabled Contactor Off command from fault
x = Reserved
*If enabled, the auto restart function is disabled.

No.	Parameter Name and Description	Values
133	**[Cnvrtr OL Factor]** Sets the operating level for the AFE overload. (AFE rated current) x (AFE OL Factor) = Operating Level	Default: 1.00 Min/Max: 0.50/1.50 Units: None

File	Group	No.	Parameter Name and Description	Values
UTILITY	Alarms	135	**[Alarm Config]** Enables/disables alarm conditions that initiate an AFE alarm.	
		136	**[Alarm Clear]** Resets all [Alarm 1…4 Code] parameters to '0'.	Default: 0 Ready Options: 0 Ready 1 Clr Alarm Que
		137 138 139 140	**[Alarm 1 Code]** **[Alarm 2 Code]** **[Alarm 3 Code]** **[Alarm 4 Code]** Displays a code that represents a converter alarm. The codes appear in the order they occur ([Alarm 1 Code] = the most recent alarm). A time stamp is not available with alarms.	Default: Read Only Min/Max: 0/65535 Units: None

Bit Definition							DCBusHiAlarm	DCBusLoAlarm	DCRefHighLim	DCRefLowLim	LCL Fan Stop	HeatsinkOvTp	LineSyncFail	Anlg In Loss	DC UnderVolt	Prechrg Actv
Default	x	x	x	x	x	x	1	1	1	1	1	1	1	1	1	1
Bit	15	14	13	12	11	10	9	8	7	6	5	4	3	2	1	0

1 = Enabled
0 = Disabled
x = Reserved

- Bit 0 (Prechrg Actv) sets an alarm when the precharging is not completed.
- Bit 1 (DC UnderVolt) sets an alarm when the DC link voltage exceeded the limit.
- Bit 2 (Anlg In Loss) sets an alarm when the analog input is lost.
- Bit 3 (LineSyncFail) sets an alarm when the AC input line phase is missing.
- Bit 4 (HeatsinkOvTp) sets an alarm when the heatsink temperature is over temperature (90 °C [194 °F]).
- Bit 5 (LCL Fan Stop) sets an alarm when the LCL fan has been stopped.
- Bit 6 (DCRefLowLim) sets an alarm when the DC voltage reference is less than the limit in parameter 080 [DC Ref Lo Lmt].
- Bit 7 (DCRefHighLim) sets an alarm when the DC voltage reference exceeds the limit in parameter 081 [DC Ref Hi Lmt].
- Bit 8 (DCBusLoAlarm) sets an alarm when the DC voltage is less than the value set by parameter 078 [DC Bus Lo Alarm].
- Bit 9 (DCBusHiAlarm) sets an alarm when the DC voltage exceeds the value set by parameter 079 [DC Bus Hi Alarm].

Communication File

File	Group	No.	Parameter Name and Description	Values
COMMUNICATION	Comm Control	150	**[DPI Baud Rate]** Displays the '500 kbps' baud rate that DPI uses for peripherals attached to the AFE.	Default: Read Only
		151	**[Cnvrtr Logic Rslt]** Captures and displays the final Logic Command that results from the combination of all DPI and discrete inputs. This parameter has the same structure as the product-specific Logic Command received via DPI, and is used in peer-to-peer communications.	Read Only
		152	**[DPI Port Sel]** Selects which DPI port reference value appears in parameter 153 [DPI Port Value].	Default: 1 DPI Port 1 Options: 1 DPI Port 1 2 DPI Port 2 3 DPI Port 3 4 DPI Port 4 5 DPI Port 5
		153	**[DPI Port Value]** Displays the value of the DPI reference selected in parameter 152 [DPI Port Sel].	Default: Read Only Min/Max: 0.0/1500.0V DC Units: 0.1V DC
	Masks and Owners	154	**[Logic Mask]** Sets which adapters can control the AFE. If the bit for an adapter is set to '0', the adapter has no control functions except for stop.	
		155	**[Fault Clr Mask]** Sets which adapters can clear a fault.	See [Logic Mask].
		156	**[Stop Owner]** Displays the adapters that are presently issuing a valid stop command.	Read Only
		157	**[Start Owner]** Displays the adapters that are presently issuing a valid start command.	See [Stop Owner].
		158	**[Fault Clr Owner]** Displays the adapters that are presently clearing a fault.	See [Stop Owner].

[Cnvrtr Logic Rslt] bit definitions:

Bit Definition									Cmd LogicOut				Clear Fault		Start	Stop
Default	x	x	x	x	x	0	x	x	0	x	x	x	0	x	0	0
Bit	15	14	13	12	11	10	9	8	7	6	5	4	3	2	1	0

1 = Condition True
0 = Condition False
x = Reserved

[Logic Mask] bit definitions:

Bit Definition											DPI Port 5	DPI Port 4	DPI Port 3	DPI Port 2	DPI Port 1	Digital In
Default	x	x	x	x	x	x	x	x	x	x	1	1	1	1	1	1
Bit	15	14	13	12	11	10	9	8	7	6	5	4	3	2	1	0

1 = Control Permitted
0 = Control Masked
x = Reserved

[Stop Owner] bit definitions:

Bit Definition											DPI Port 5	DPI Port 4	DPI Port 3	DPI Port 2	DPI Port 1	Digital In
Default	x	x	x	x	x	x	x	x	x	x	0	0	0	0	0	1
Bit	15	14	13	12	11	10	9	8	7	6	5	4	3	2	1	0

1 = digital outputIssuing Command
0 = No Command

File	Group	No.	Parameter Name and Description	Values
COMMUNICATION	Datalinks	170 171	**[Data In A1] - Link A Word 1** **[Data In A2] - Link A Word 2** Sets the parameter number whose value is written from a communication device data table. If parameters that can only be changed while the unit is stopped are used as datalink inputs, they are not updated until the unit is stopped. See the communication adapter User Manual for datalink information.	Default: 0 (0 = Disabled) Min/Max: 0/236 Units: None
		172 173	**[Data In B1] - Link B Word 1** **[Data In B2] - Link B Word 2**	See [Data In A1] - Link A Word 1 [Data In A2] - Link A Word 2.
		174 175	**[Data In C1] - Link C Word 1** **[Data In C2] - Link C Word 2**	See [Data In A1] - Link A Word 1 [Data In A2] - Link A Word 2.
		176 177	**[Data In D1] - Link D Word 1** **[Data In D2] - Link D Word 2**	See [Data In A1] - Link A Word 1 [Data In A2] - Link A Word 2.
		180 181	**[Data Out A1] - Link A Word 1** **[Data Out A2] - Link A Word 2** Sets the parameter number whose value is written to a communication device data table.	Default: 0 (0 = Disabled) Min/Max: 0/236 Units: None
		182 183	**[Data Out B1] - Link B Word 1** **[Data Out B2] - Link B Word 2**	See [Data Out A1] - Link A Word 1 [Data Out A2] - Link A Word 2.
		184 185	**[Data Out C1] - Link C Word 1** **[Data Out C2] - Link C Word 2**	See [Data Out A1] - Link A Word 1 [Data Out A2] - Link A Word 2.
		186 187	**[Data Out D1] - Link D Word 1** **[Data Out D2] - Link D Word 2**	See [Data Out A1] - Link A Word 1 [Data Out A2] - Link A Word 2.

Inputs and Outputs File

File	Group	No.	Parameter Name and Description	Values
INPUTS and OUTPUTS	Analog Inputs	200	**[Anlg In Config]** Selects the mode for the analog inputs.	
		201	**[Analog In 1 Hi]** Sets the highest input value to the Analog Input 1 scaling block. Parameter 200 [Anlg In Config] defines if this input is -/+10V or 4…20 mA.	Default: 10.000V Min/Max: 4.000/20.000 mA -/+10.000V Units: 0.001 mA 0.001V
		202	**[Analog In 1 Lo]** Sets the lowest input value to the Analog Input 1 scaling block. Parameter 200 [Anlg In Config] defines if this input is -/+10V or 4…20 mA.	Default: 0.000V Min/Max: 4.000/20.000 mA -/+10.000V Units: 0.001 mA 0.001V
		203	**[Analog In 1 Loss]** Selects the AFE action when an analog signal loss is detected. Signal loss is defined as an analog signal less than 1V or 2 mA. The signal loss event ends and normal operation resumes when the input signal level is greater than or equal to 1.5V or 3 mA.	Default: 0 Disabled Options: 0 Disabled 1 Fault 2 Hold Input 3 Set Input Lo 4 Set Input Hi
		204	**[Analog In 2 Hi]** Sets the highest input value to the Analog Input 2 scaling block. Parameter 200 [Anlg In Config] defines if this input is -/+10V or 4…20 mA.	Default: 10.000V Min/Max: 4.000/20.000 mA -/+10.000V Units: 0.001 mA 0.001V
		205	**[Analog In 2 Lo]** Sets the lowest input value to the Analog Input 2 scaling block. Parameter 200 [Anlg In Config] defines if this input is -/+10V or 4…20 mA.	Default: 0.000V Min/Max: 4.000/20.000 mA -/+10.000V Units: 0.001 mA 0.001V
		206	**[Analog In 2 Loss]** Selects the AFE action when an analog signal loss is detected. Signal loss is defined as an analog signal less than 1V or 2 mA. The signal loss event ends and normal operation resumes when the input signal level is greater than or equal to 1.5V or 3 mA.	Default: 0 Disabled Options: 0 Disabled 1 Fault 2 Hold Input 3 Set Input Lo 4 Set Input Hi
	Analog Outputs	207	**[Anlg Out Config]** Selects the mode for the analog outputs.	

Bit Definition															An2 (0 = V, 1 = mA)	An1 (0 = V, 1 = mA)
Default	x	x	x	x	x	x	x	x	x	x	x	x	x	x	0	0
Bit	15	14	13	12	11	10	9	8	7	6	5	4	3	2	1	0

1 = Current
0 = Voltage
x = Reserved

Bit Definition															An2 (0 = V, 1 = mA)	An1 (0 = V, 1 = mA)
Default	x	x	x	x	x	x	x	x	x	x	x	x	x	x	0	0
Bit	15	14	13	12	11	10	9	8	7	6	5	4	3	2	1	0

1 = Current
0 = Voltage
x = Reserved

Important: Make sure that the jumpers are in the correct position or the output is wrong:
J3 = Analog Output 1; J4 = Analog Output 2
Position AB = Current; Position BC = Voltage 0-10V (default); Position CD = Voltage -/+10V

File	Group	No.	Parameter Name and Description	Values
INPUTS and OUTPUTS	Analog Outputs	208	**[Anlg Out Absolute]** Selects whether the signed value or absolute value of a parameter is used before being scaled to drive the analog output.	

Bit Definition															Analog Out2	Analog Out1
Default	x	x	x	x	x	x	x	x	x	x	x	x	x	x	1	1
Bit	15	14	13	12	11	10	9	8	7	6	5	4	3	2	1	0

1 = Absolute
0 = Signed
x = Reserved

[Analog Out1 Sel]

Selects the source for Analog Output 1.

Options		[Analog Out1 Lo] Value Parameter [Anlg Out Absolut] = Signed	[Analog Out1 Lo] Value Parameter [Anlg Out Absolut] = Absolute	[Analog Out1 Hi] Value
0	Input Volt	0V AC	0V AC	200% Rated (2)
1	AC Line Freq	–63.0 Hz	0 Hz	63.0 Hz
2	Total Curr	0 Amps	0 Amps	200% Rated (3)
3	Active Curr	–200% Rated	0 Amps	200% Rated (3)
4	ReactiveCurr	–200% Rated	0 Amps	200% Rated (3)
5	Input Curr R	0 Amps	0 Amps	200% Rated (3)
6	Input Curr S	0 Amps	0 Amps	200% Rated (3)
7	Input Curr T	0 Amps	0 Amps	200% Rated (3)
8	DC Bus Volt	0V DC	0V DC	300% Rated (2)
9	DC Bus Curr	–200% Rated	0 Amps	200% Rated (3)
10	AC Line kW	–200% Rated	0 kW	200% Rated (4)
11	AC Line kVar	–200% Rated	0 kVar	200% Rated (4)
12	AC Line kVA	0 kVA	0 kVA	200% Rated (4)
13	Power Factor	-1.00	0	1.00
14	DC Bus V Ref	P080 [V DC]	P080 [V DC]	P081 [V DC]
15	Param Cntl (1)	—	—	—
16	TestPt Data1	-32767	0	32767

(1) Parameter controlled analog output allows PLC to control analog outputs through datalinks. Set in parameter 217 [Anlg Out1 Setpt] and parameter 218 [Anlg Out2 Setpt].
(2) 100% corresponds to parameter 031 [Rated Volts].
(3) 100% corresponds to parameter 032 [Rated Amps].
(4) 100% corresponds to parameter 030 [Rated kW].

Default: 0 = Input Volt
Options: See Table

File	Group	No.	Parameter Name and Description	Values
INPUTS and OUTPUTS	Analog Outputs	210	**[Analog Out1 Hi]** Sets the Analog Output 1 value when the source value is at maximum.	Default: 20.000 mA, 10.000V Min/Max: 4.000/20.000 mA -/+10.000V Units: 0.001 mA 0.001V
		211	**[Analog Out1 Lo]** Sets the Analog Output 1 value when the source value is at minimum.	Default: 0.000 mA, 0.000V Min/Max: 4.000/20.000 mA -/+10.000V Units: 0.001 mA 0.001V
		212	**[Analog Out2 Sel]** Selects the source for Analog Output 2.	Default: 0 = AC Line Freq Options: See [Analog Out1 Sel] Table
		213	**[Analog Out2 Hi]** Sets the Analog Output 2 value when the source value is at maximum.	Default: 20.000 mA, 10.000V Min/Max: 4.000/20.000 mA -/+10.000V Units: 0.001 mA 0.001V
		214	**[Analog Out2 Lo]** Sets the Analog Output 2 value when the source value is at minimum.	Default: 0.000 mA, 0.000V Min/Max: 4.000/20.000 mA -/+10.000V Units: 0.001 mA 0.001V

File	Group	No.	Parameter Name and Description	Values
INPUTS and OUTPUTS	Analog Outputs	215	**[Anlg Out1 Scale]** Sets the high value for the range of Analog Output 1 scale. Entering '0.0' disables this scale and the maximum scale is used. Example: If parameter 209 [Analog Out1 Sel] = 'DC Bus Volt', the maximum value is 2 * parameter 031 [Rated Volts] = 800V DC. By setting parameter 215 [Anlg Out1 Scale] = 600V DC, then 600V DC instead of 800V DC is used for the parameter 210 [Analog Out1 Hi] value at the analog output.	Default: 0.0 Min/Max: Based on [Analog Out1 Sel] Units: Based on [Analog Out1 Sel]
		216	**[Anlg Out2 Scale]** Sets the high value for the range of Analog Output 2 scale. Entering '0.0' disables this scale and max scale is used. Example: If parameter 212 [Analog Out2 Sel] = 'DC Bus Volt', the maximum value is 2 * parameter 031 [Rated Volts] = 800V DC. By setting parameter 216 [Anlg Out2 Scale] = 600V DC, then 600V DC instead of 800V DC is used for the parameter 213 [Analog Out2 Hi] value at the analog output.	Default: 0.0 Min/Max: Based on [Analog Out2 Sel] Units: Based on [Analog Out2 Sel]
		217	**[Anlg Out1 Setpt]** Sets the Analog Output 1 value from a communication device. Example: Set parameter 170 [Data In A1] to '217' (value from communication device). Then set parameter 209 [Analog Out1 Sel] to 'Param Cntl'.	Default: 0.000 mA, 0.000V Min/Max: 4.000/20.000 mA -/+10.000V Units: 0.001 mA 0.001V
		218	**[Anlg Out2 Setpt]** Sets the Analog Output 2 value from a communication device. Example: Set parameter 171 [Data In A2] to '218' (value from communication device). Then set unit parameter 212 [Analog Out2 Sel] to 'Param Cntl'.	Default: 0.000 mA, 0.000V Min/Max: 4.000/20.000 mA -/+10.000V Units: 0.001 mA 0.001V
	Digital Inputs	221 222 223 224 225 226	**[Digital In1 Sel]** **[Digital In2 Sel]** **[Digital In3 Sel]** **[Digital In4 Sel]** **[Digital In5 Sel]** (Only this parameter is fixed and non-configurable.) **[Digital In6 Sel]** Selects the function for the digital inputs. 1 (Run) - Selects the digital input to command the AFE to start modulating as long as the stop input is not on. It is selectable for other functions, if the Run is controlled over DPI. 2 (Clear Fault) - Selects the digital input, if a fault is pending, to clear it if the condition is no longer present. It is also selectable if this function is controlled by Comm Bus. 3 (Aux Fault) - Selects the digital input to be a customer-supplied external signal wired into the AFE unit. Opening this contact issues an external fault command, disabling the converter. 4 (LCL OverTemp) - Selects the digital input to be used as temperature protection to the LCL filter. 5 (LCL Fan Stop) - Selects the digital input to be used as an acknowledge signal from the LCL filter fan operation. 6 (ContactorAck) - Selects the digital input to be used as an acknowledge signal from the main contactor. 7 (Excl Link) - Selects the digital input to control a digital output. 8 (Enable) - Selects the digital input to allow a Run command. If J5 jumper on the digital input card is removed, the enable function is assigned to Digital Input 6 (enable input) and creates a fault if opened. 9 (Enable Mcont) - Selects the digital input, when opened, to command the main contactor to open. This option is to force the main contactor open and discharge the DC bus. 10 (Mcont Off) - Selects the digital input, when closed, to command the main contactor to open. This option is to force the main contactor open and discharge the DC bus. We recommend not to change the factory default wiring and setting, except that [Digital In6 Sel] can be configured for any other function.	Default In1: 1 Run Default In2: 2 Clear Fault Default In3: 3 Enable Mcont Default In4: 6 ContactorAck Default In5: 4 LCL OverTemp Default In6: 5 Not Used Options: 0 Not Used 1 Run 2 Clear Fault 3 Aux Fault 4 LCL OverTemp 5 LCL Fan Stop 6 ContactorAck 7 Excl Link 8 Enable 9 Enable Mcont 10 Mcont Off

File	Group	No.	Parameter Name and Description	Values
INPUTS and OUTPUTS	Digital Outputs	227	**[Dig Out Setpt]** Sets the digital output from a communication device. Example: Set parameter 172 [Data In B1] to '227' and parameter 229 [Digital Out2 Sel] to 'Param Cntl'. Digital Output 2 can be controlled by controlling Bit 1 of this parameter over Datalink B1.	
		228	**[Digital Out1 Sel]** Digital Output 1 is specified for controlling the main contactor. This parameter is read only as '10' (Contact Ctrl).	Default: Read Only
		229	**[Digital Out2 Sel]** Selects the AFE status that energizes a (CRx) output relay. (1) Any relay that is programmed as Fault or Alarm energizes (pick up) when power is applied to the AFE and de-energizes (drop out) when a fault or alarm exists. Relays selected for other functions energize only when that condition exists and de-energizes when the condition is removed. (2) These selections correspond to bits in parameter 097 [Cnvrtr Alarm]. Therefore, these selections work only if the corresponding alarm is configured in parameter 135 [Alarm Config]. (3) When a digital output is set to one of these options (for example, Input 3 Link) with Digital Input 3 set to 'Excel Link', the Digital Input 3 state (on/off) is echoed in the digital output. (4) Bit 7 of parameter 151 [Cnvrtr LogicRslt] controls the digital output. (5) Parameter controlled digital output lets the PLC control digital outputs through data links. Set in parameter 227 [Dig Out Setpt]. (6) Charging contactor control over the network by Bit 7 of parameter 151 [Cnvrtr LogicRslt] and as soon as the main contactor is on, the output is switched off. An impulse over the network is enough to charge. Use this feature only if the control board is supplied from an external 24V DC power supply.	Default 1: 1 Fault Options: 0 Not Used 1 Fault (1) 2 Alarm (1) 3 Ready 4 Active 5 Motoring 6 Regenerating 7 In Precharge 8 Current Limit 9 At Reference 10 Contact Ctrl 11 ContactorAck 12 Charge Cntrl (6) 13 Anlg In Loss (2) 14 DC UnderVolt (2) 15 DCRefLowLim (2) 16 DCRefHighLim (2) 17 Reserved 18… Input 1…6 Link (3) 23 LogicCmdBit (4) 24 Param Cntrl (5) 25
		230	**[Dig Out2 Invert]** Selects if the Digital Output 2 is inverted or not.	Default: 1 True Options: 0 False 1 True
		231	**[Dig Out2 OnTime]** Sets the 'ON Delay' time for Digital Output 2. This value is the time between the occurrence of a condition and activation of the relay.	Default: 0.00 sec Min/Max: 0.00/163.00 sec Units: 0.01 sec
		232	**[Dig Out2 OffTime]** Sets the 'OFF Delay' time for Digital Output 2. This value is the time between the disappearance of a condition and de-activation of the relay.	Default: 0.00 sec Min/Max: 0.00/163.00 sec Units: 0.01 sec
		233	**[Digital Out3 Sel]** See [Digital Out2 Sel].	Default: 4 = Active Options: See [Digital Out2 Sel].
		234	**[Dig Out3 Invert]** Selects if the Digital Output 3 is inverted or not.	Default: 0 False Min/Max: 0 False Units: 1 True
		235	**[Dig Out3 OnTime]** Sets the 'ON Delay' time for Digital Output 3. This value is the time between the occurrence of a condition and activation of the relay.	Default: 0.00 sec Min/Max: 0.00/163.00 sec Units: 0.01 sec
		236	**[Dig Out3 OffTime]** Sets the 'OFF Delay' time for Digital Output 3. This value is the time between the disappearance of a condition and de-activation of the relay.	Default: 0.00 sec Min/Max: 0.00/163.00 sec Units: 0.01 sec

Bit Definition														Net DigOut3	Net DigOut2	
Default	x	x	x	x	x	x	x	x	x	x	x	x	x	0	0	x
Bit	15	14	13	12	11	10	9	8	7	6	5	4	3	2	1	0

1 = Output Energized
0 = Output Deenergized
x = Reserved

Parameter Cross Reference – by Name

Parameter Name	Number	Group	Page
AC Line Freq	002	Metering	65
AC Line kVA	015	Metering	99
AC Line kVar	014	Metering	99
AC Line kW	013	Metering	99
Active Current	004	Metering	99
Active I Ki	067	Current Loop	103
Active I Kp	066	Current Loop	103
Active I Ref	064	Current Loop	103
Alarm 1 @ Fault	110	Diagnostics	108
Alarm 2 @ Fault	111	Diagnostics	108
Alarm Clear	136	Alarms	110
Alarm Config	135	Alarms	110
Alarm X Code	137…140	Alarms	110
Analog In 1 Hi	201	Analog Inputs	113
Analog In 1 Lo	202	Analog Inputs	113
Analog In 1 Loss	203	Analog Inputs	113
Analog In 2 Hi	204	Analog Inputs	113
Analog In 2 Lo	205	Analog Inputs	113
Analog In 2 Loss	206	Analog Inputs	113
Analog In1 Value	022	Metering	100
Analog In2 Value	023	Metering	100
Analog Out1 Hi	210	Analog Outputs	114
Analog Out1 Lo	211	Analog Outputs	114
Analog Out1 Sel	209	Analog Outputs	114
Analog Out2 Hi	213	Analog Outputs	114
Analog Out2 Lo	214	Analog Outputs	114
Analog Out2 Sel	212	Analog Outputs	114
Anlg In Config	200	Analog Inputs	113
Anlg Out Absolute	208	Analog Outputs	114
Anlg Out Config	207	Analog Outputs	113
Anlg Out1 Scale	215	Analog Outputs	115
Anlg Out1 Setpt	217	Analog Outputs	115
Anlg Out2 Scale	216	Analog Outputs	115
Anlg Out2 Setpt	218	Analog Outputs	115
Auto Rstrt Delay	054	Restart Modes	102
Auto Rstrt Tries	053	Restart Modes	102
Auto Stop Level	049	Control Modes	101
AutoRstrt Config	052	Restart Modes	102
Cmd DC Volt	018	Metering	100
Cnvrtr Alarm 1	097	Diagnostics	106
Cnvrtr Alarm 2	098	Diagnostics	106
Cnvrtr Logic Rslt	151	Comm Control	111
Cnvrtr OL Count	116	Diagnostics	108
Cnvrtr OL Factor	133	Faults	109
Cnvrtr Status 1	095	Diagnostics	105
Cnvrtr Status 2	096	Diagnostics	106
Contact Off Cnfg	132	Faults	109
Contact On Delay	050	Control Modes	101
Control Options	051	Control Modes	102

Parameter Name	Number	Group	Page
Control SW Ver	033	Converter Data	100
Current Lmt Val	077	Limits	103
Data In AX	170, 171	Datalinks	112
Data In BX	172, 173	Datalinks	112
Data In CX	174, 175	Datalinks	112
Data In DX	176, 177	Datalinks	112
Data Out AX	180, 181	Datalinks	112
Data Out BX	182, 183	Datalinks	112
Data Out CX	184, 185	Datalinks	112
Data Out DX	186, 187	Datalinks	112
DC Bus Current	012	Metering	99
DC Bus Hi Alarm	079	Limits	103
DC Bus Lo Alarm	078	Limits	103
DC Bus Volt	011	Metering	99
DC Ref Hi Lmt	081	Limits	103
DC Ref Lo Lmt	080	Limits	103
DC Ref Source	099	Diagnostics	106
DC Volt Ki	063	Voltage Loop	102
DC Volt Kp	062	Voltage Loop	102
DC Volt Ref	061	Voltage Loop	102
DC Volt Ref Sel	060	Voltage Loop	102
Dig In Status	102	Diagnostics	107
Dig Out Setpt	227	Digital Outputs	116
Dig Out Status	103	Diagnostics	107
Dig Out2 Invert	230	Digital Outputs	116
Dig Out2 OffTime	232	Digital Outputs	116
Dig Out2 OnTime	231	Digital Outputs	116
Dig Out3 Invert	234	Digital Outputs	116
Dig Out3 OffTime	236	Digital Outputs	116
Dig Out3 OnTime	235	Digital Outputs	116
Digital InX Sel	221…226	Digital Inputs	115
Digital Out1 Sel	228	Digital Outputs	116
Digital Out2 Sel	229	Digital Outputs	116
Digital Out3 Sel	233	Digital Outputs	116
DPI Baud Rate	150	Comm Control	111
DPI Port Sel	152	Comm Control	111
DPI Port Value	153	Comm Control	111
Droop	085	Parallel Mode	104
Elapsed Run Time	021	Metering	100
Fault 1 Code	124	Faults	109
Fault 1 Time	125	Faults	109
Fault 2 Code	126	Faults	109
Fault 2 Time	127	Faults	109
Fault 3 Code	128	Faults	109
Fault 3 Time	129	Faults	109
Fault 4 Code	130	Faults	109
Fault 4 Time	131	Faults	109
Fault Bus Volts	106	Diagnostics	107
Fault Clear	121	Faults	109
Fault Clear Mode	122	Faults	109

Parameter Name	Number	Group	Page
Fault Clr Mask	155	Masks and Owners	111
Fault Clr Owner	158	Masks and Owners	111
Fault Config	120	Faults	109
Fault Frequency	104	Diagnostics	107
Fault Temp	107	Diagnostics	107
Fault Total Curr	105	Diagnostics	107
Ground Current	010	Metering	99
Ground I Lvl	082	Limits	103
Heatsink Temp	017	Metering	99
I Imbalance	009	Metering	99
Input Current R	006	Metering	99
Input Current S	007	Metering	99
Input Current T	008	Metering	99
Input Voltage	001	Metering	99
Language	093	Converter Memory	105
Last Stop Source	101	Diagnostics	107
Logic Mask	154	Masks and Owners	111
Modulation Index	043	Control Modes	101
Modulation Type	042	Control Modes	101
Motor Power Lmt	075	Limits	103
Motoring MWh	019	Metering	100
Nom Input Volt	040	Control Modes	101
Param Access Lvl	090	Converter Memory	105
Power Factor	016	Metering	99
Power Up Marker	123	Faults	109
PWM Frequency	041	Control Modes	101
PWM Synch	086	Parallel Mode	104
Rated Amps	032	Converter Data	100
Rated kW	030	Converter Data	100
Rated Volts	031	Converter Data	100
RatedLineCurrent	045	Control Modes	101
Reactive Current	005	Metering	99
Reactive I Ki	069	Current Loop	103
Reactive I Kp	068	Current Loop	103
Reactive I Ref	065	Current Loop	103
Reactive I Sel	070	Current Loop	103
Regen MWh	020	Metering	100
Regen Power Lmt	076	Limits	103
Reset Meters	092	Converter Memory	105
Reset To Defaults	091	Converter Memory	105
Restart Delay	047	Control Modes	101
Start Inhibits	100	Diagnostics	107
Start Owner	157	Masks and Owners	111
Start Up Delay	087	Parallel Mode	104
Start/Stop Mode	046	Control Modes	101
Status 1 @ Fault	108	Diagnostics	108
Status 2 @ Fault	109	Diagnostics	108
Stop Delay	048	Control Modes	101
Stop Owner	156	Masks and Owners	111
Testpoint 1 Data	113	Diagnostics	108

Parameter Name	Number	Group	Page
Testpoint 1 Sel	112	Diagnostics	108
Testpoint 2 Data	115	Diagnostics	108
Testpoint 2 Sel	114	Diagnostics	108
Total Current	003	Metering	99
Voltage Class	094	Converter Memory	105

Parameter Cross Reference – by Number

Number	Parameter Name	Group	Page
001	Input Voltage	Metering	99
002	AC Line Freq	Metering	99
003	Total Current	Metering	99
004	Active Current	Metering	99
005	Reactive Current	Metering	99
006	Input Current R	Metering	99
007	Input Current S	Metering	99
008	Input Current T	Metering	99
009	I Imbalance	Metering	99
010	Ground Current	Metering	99
011	DC Bus Volt	Metering	99
012	DC Bus Current	Metering	99
013	AC Line kW	Metering	99
014	AC Line kVar	Metering	99
015	AC Line kVA	Metering	99
016	Power Factor	Metering	99
017	Heatsink Temp	Metering	99
018	Cmd DC Volt	Metering	100
019	Motoring MWh	Metering	100
020	Regen MWh	Metering	100
021	Elapsed Run Time	Metering	100
022	Analog In1 Value	Metering	100
023	Analog In2 Value	Metering	100
030	Rated kW	Converter Data	100
031	Rated Volts	Converter Data	100
032	Rated Amps	Converter Data	100
033	Control SW Ver	Converter Data	100
040	Nom Input Volt	Control Modes	101
041	PWM Frequency	Control Modes	101
042	Modulation Type	Control Modes	101
043	Modulation Index	Control Modes	101
045	RatedLineCurrent	Control Modes	101
046	Start/Stop Mode	Control Modes	101
047	Restart Delay	Control Modes	101
048	Stop Delay	Control Modes	101
049	Auto Stop Level	Control Modes	101
050	Contact On Delay	Control Modes	101
051	Control Options	Control Modes	102
052	AutoRstrt Config	Restart Modes	102
053	Auto Rstrt Tries	Restart Modes	102

Number	Parameter Name	Group	Page
054	Auto Rstrt Delay	Restart Modes	102
060	DC Volt Ref Sel	Voltage Loop	102
061	DC Volt Ref	Voltage Loop	102
062	DC Volt Kp	Voltage Loop	102
063	DC Volt Ki	Voltage Loop	102
064	Active I Ref	Current Loop	103
065	Reactive I Ref	Current Loop	103
066	Active I Kp	Current Loop	103
067	Active I Ki	Current Loop	103
068	Reactive I Kp	Current Loop	103
069	Reactive I Ki	Current Loop	103
070	Reactive I Sel	Current Loop	103
075	Motor Power Lmt	Limits	103
076	Regen Power Lmt	Limits	103
077	Current Lmt Val	Limits	103
078	DC Bus Lo Alarm	Limits	103
079	DC Bus Hi Alarm	Limits	103
080	DC Ref Lo Lmt	Limits	103
081	DC Ref Hi Lmt	Limits	103
082	Ground I Lvl	Limits	103
085	Droop	Parallel Mode	104
086	PWM Synch	Parallel Mode	104
087	Start Up Delay	Parallel Mode	104
090	Param Access Lvl	Converter Memory	105
091	Reset To Defaults	Converter Memory	105
092	Reset Meters	Converter Memory	105
093	Language	Converter Memory	105
094	Voltage Class	Converter Memory	105
095	Cnvrtr Status 1	Diagnostics	105
096	Cnvrtr Status 2	Diagnostics	106
097	Cnvrtr Alarm 1	Diagnostics	106
098	Cnvrtr Alarm 2	Diagnostics	106
099	DC Ref Source	Diagnostics	106
100	Start Inhibits	Diagnostics	107
101	Last Stop Source	Diagnostics	107
102	Dig In Status	Diagnostics	107
103	Dig Out Status	Diagnostics	107
104	Fault Frequency	Diagnostics	107
105	Fault Total Curr	Diagnostics	107
106	Fault Bus Volts	Diagnostics	107
107	Fault Temp	Diagnostics	107
108	Status 1 @ Fault	Diagnostics	108
109	Status 2 @ Fault	Diagnostics	108
110	Alarm 1 @ Fault	Diagnostics	108
111	Alarm 2 @ Fault	Diagnostics	108
112	Testpoint 1 Sel	Diagnostics	108
113	Testpoint 1 Data	Diagnostics	108
114	Testpoint 2 Sel	Diagnostics	108
115	Testpoint 2 Data	Diagnostics	108
116	Cnvrtr OL Count	Diagnostics	108

Number	Parameter Name	Group	Page
120	Fault Config	Faults	109
121	Fault Clear	Faults	109
122	Fault Clear Mode	Faults	109
123	Power Up Marker	Faults	109
124	Fault 1 Code	Faults	109
125	Fault 1 Time	Faults	109
126	Fault 2 Code	Faults	109
127	Fault 2 Time	Faults	109
128	Fault 3 Code	Faults	109
129	Fault 3 Time	Faults	109
130	Fault 4 Code	Faults	109
131	Fault 4 Time	Faults	109
132	Contact Off Cnfg	Faults	109
133	Cnvrtr OL Factor	Faults	109
135	Alarm Config	Alarms	110
136	Alarm Clear	Alarms	110
137…140	Alarm X Code	Alarms	110
150	DPI Baud Rate	Comm Control	111
151	Cnvrtr Logic Rslt	Comm Control	111
152	DPI Port Sel	Comm Control	111
153	DPI Port Value	Comm Control	111
154	Logic Mask	Masks and Owners	111
155	Fault Clr Mask	Masks and Owners	111
156	Stop Owner	Masks and Owners	111
157	Start Owner	Masks and Owners	111
158	Fault Clr Owner	Masks and Owners	111
170, 171	Data In AX	Datalinks	112
172, 173	Data In BX	Datalinks	112
174, 175	Data In CX	Datalinks	112
176, 177	Data In DX	Datalinks	112
180, 181	Data Out AX	Datalinks	112
182, 183	Data Out BX	Datalinks	112
184, 185	Data Out CX	Datalinks	112
186, 187	Data Out DX	Datalinks	112
200	Anlg In Config	Analog Inputs	113
201	Analog In 1 Hi	Analog Inputs	113
202	Analog In 1 Lo	Analog Inputs	113
203	Analog In 1 Loss	Analog Inputs	113
204	Analog In 2 Hi	Analog Inputs	113
205	Analog In 2 Lo	Analog Inputs	113
206	Analog In 2 Loss	Analog Inputs	113
207	Anlg Out Config	Analog Outputs	113
208	Anlg Out Absolute	Analog Outputs	114
209	Analog Out1 Sel	Analog Outputs	114
210	Analog Out1 Hi	Analog Outputs	114
211	Analog Out1 Lo	Analog Outputs	114
212	Analog Out2 Sel	Analog Outputs	114
213	Analog Out2 Hi	Analog Outputs	114
214	Analog Out2 Lo	Analog Outputs	114
215	Anlg Out1 Scale	Analog Outputs	115

Number	Parameter Name	Group	Page
216	Anlg Out2 Scale	Analog Outputs	115
217	Anlg Out1 Setpt	Analog Outputs	115
218	Anlg Out2 Setpt	Analog Outputs	115
221…226	Digital InX Sel	Digital Inputs	115
227	Dig Out Setpt	Digital Outputs	116
228	Digital Out1 Sel	Digital Outputs	116
229	Digital Out2 Sel	Digital Outputs	116
230	Dig Out2 Invert	Digital Outputs	116
231	Dig Out2 OnTime	Digital Outputs	116
232	Dig Out2 OffTime	Digital Outputs	116
233	Digital Out3 Sel	Digital Outputs	116
234	Dig Out3 Invert	Digital Outputs	116
235	Dig Out3 OnTime	Digital Outputs	116
236	Dig Out3 OffTime	Digital Outputs	116

Notes:

Troubleshooting

This chapter provides information to guide you in troubleshooting the PowerFlex® Active Front End. Included is a listing and description of AFE faults (with possible solutions, when applicable) and alarms.

Topic	Page
AFE Status	125
Faults and Alarms	126
Manually Clearing Faults	127
Fault and Alarm Descriptions	127
Clear the Alarms	131
Common Symptoms and Corrective Actions	131
Technical Support	135

AFE Status

The condition or state of the AFE is constantly monitored. The status indicators and/or the HIM (if present) indicate any changes.

Front Panel Indications

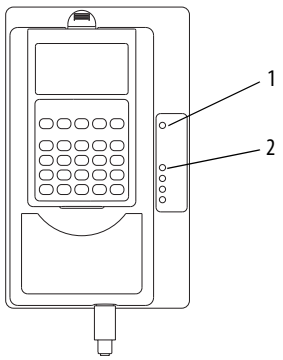

Item	Name	Color	State	Description
1	PWR (power)	Green	Steady	Illuminates when power is applied to the AFE.
2	PORT (1)	See the Communication Adapter User Manual (publication 20COMM-UM*xxx*)		Status of DPI™ port internal communication (if present).
	MOD (1)			Status of communication adapter (when installed).
	NET A (1)			Status of network (if connected).
	NET B (1)			Status of secondary network (if connected).

(1) These indicators operate only when a 20-COMM-X communication adapter is installed in the AFE and operating on the connected network.

HIM Indication

The HIM also provides visual notification of a fault or alarm condition.

Condition	Display
AFE is indicating a fault. The HIM reports the fault condition and displays the following data: • 'Faulted' appears in the status line • Fault number • Fault name • Time that has passed since fault occurred Press Esc to regain HIM control.	F> Faulted Auto Volt – Fault – F 5 DC OverVolt Time Since Fault 0000:23:52
AFE is indicating an alarm. The HIM reports the alarm condition and displays the following data: • Alarm name (only type 2 alarms) • Alarm bell graphic	F> Power Loss Auto Volt Main Menu: Diagnostics Parameter Device Select

Faults and Alarms

A fault is a condition that stops the AFE. There are three fault types.

Fault Type	Fault Description	
1	Auto-reset run	When this type of fault occurs, and [Auto Rstrt Tries] (page 102) is set to a value greater than '0', a user-configurable timer, [Auto Rstrt Delay] (page 102) begins. When the timer reaches zero, the AFE attempts to reset the fault. If the condition that caused the fault is no longer present, the fault is reset and the AFE is restarted.
2	Non-resettable	This type of fault normally requires AFE or motor repair. The cause of the fault must be corrected before the fault can be cleared. After repair, the fault is reset on power-up.
3	Configurable	These faults can be enabled and disabled to annunciate or ignore a fault condition by using [Fault Config] (page 109).

An alarm is a condition that, if left untreated, can stop the AFE. There are two alarms types.

Alarm Type	Alarm Description	
1	Configurable	These alarms can be enabled or disabled by using [Alarm Config] (page 110).
2	Non-configurable	These alarms are always enabled.

See Fault and Alarm Descriptions on page 127.

Manually Clearing Faults

Steps

1. Press the HIM Esc (Escape) key to acknowledge the fault.
   The fault information is removed so that you can use the HIM.
2. Address the condition that caused the fault.
   The cause must be corrected before the fault can be cleared.
3. After corrective action has been taken, clear the fault with **one** of these methods:
   – Press the HIM (Stop) key.
   – Cycle power to the AFE.
   – Set AFE parameter 121 - [Fault Clear] to '1' (Clear Faults).
   – 'Clear Faults' by using the HIM Diagnostic menu.

Fault and Alarm Descriptions

Table 21 - Fault/Alarm Types, Descriptions, and Actions

No.	Name	Fault	Alarm	Description	Action *(if appropriate)*
1	PrechargeActv		1	The charging switch is open, when the START command has been given. • Faulty operation • Component failure	Reset the fault and restart. If the fault reoccurs, contact technical support (see page 135).
2	Auxiliary In	1		The auxiliary input interlock is open.	Check all remote wiring.
4	DC UnderVolt	1 3	1	The DC bus voltage fell below the minimum value of 333V for 400/480V AFEs or 461V for 600/690V AFEs. You can enable/disable this fault with parameter 120 [Fault Config].	Monitor the incoming AC line for low voltage or power interruption.
5	DC OverVolt	1		The DC bus voltage exceeded the maximum value of 911V for 400/480V AFEs or 1200V for 600/690V AFEs.	1. Check if the AFE was in a regenerative current limit condition, which can indicate an excess regenerative load. 2. Adjust parameter [Regen Power Lmt]. 3. Monitor incoming AC line for high voltage or voltage transients.
7	Overload	3		When input current exceeds 125% for 60 seconds or 150% for 30 seconds. The overload is a linear type in counting up.	Reduce the current consumption of the AFE or increase parameter 133 [Cnvrtr OL Factor].
8	HeatsinkOvrTp	2	1	The heatsink temperature has exceeded the maximum allowable value. 85 °C (185 °F) = Alarm 90 °C (194 °F) = Fault	1. Verify that the maximum ambient temperature has not been exceeded. 2. Check the fans (including the ASIC board on frame 10 and higher converters). 3. Check for an excess load.
9	IGBT OverTemp	1		The output transistors have exceeded their maximum operating temperature due to an excessive load.	1. Verify that the maximum ambient temperature has not been exceeded. 2. Check the fan or fans. 3. Check for an excess load.
10	System Fault	2		A hardware problem exists in the power structure.	1. Cycle the power. 2. Verify the fiber-optic connections. 3. Contact technical support (see page 135). 4. If the problem persists, replace the converter unit.
12	AC OverCurr	1		The AC line current has exceeded the hardware current limit.	Check programming for an excess load or other causes of excess current.
13	Ground Fault	1		A current path to earth ground exists that is greater than the parameter 082 [Ground I Lvl] value. The current must appear for 800 milliseconds before the unit will fault.	Check the cables.
14	Converter Flt	2		A hardware problem exists in the power structure.	1. Cycle the power. 2. Contact technical support (see page 135). 3. If the problem persists, replace the converter unit.

Table 21 - Fault/Alarm Types, Descriptions, and Actions (Continued)

No.	Name	Fault	Alarm	Description	Action *(if appropriate)*
17	LineSync Fail	2 3	1	One input line phase is missing.	1. Check all user-supplied fuses. 2. Check the AC input line voltage.
19	Unbalanced PU	2		An imbalance between the power modules exists (paralleled units - only Frame 13).	1. Check for DC voltage imbalance between the power modules. 2. Check for current input imbalance between the power modules.
21	Phase Loss	2		There is no current in one of the three phases.	Check supply voltage, fuses, and cable.
29	Anlg In Loss	1 3	1	An analog input is configured to fault on a signal loss. A signal loss has occurred. Configure this fault with parameter [Anlg In x Loss].	1. Check parameter settings. 2. Check for broken/loose connections at the inputs.
30	MicroWatchdog	2		A microprocessor watchdog timeout has occurred.	1. Cycle the power. 2. Replace the main control board.
31	IGBT Temp Hw	2		The drive output current has exceeded the instantaneous current limit.	1. Check for an excess load. 2. Contact technical support (see page 135).
32	Fan Cooling	2		Fan is not energized at start command.	1. Check the status of parameter 097 [Cnvrtr Alarm 1] bit 5 (LCL Fan Stop). If set to '1', check the fan on the LCL filter. If set to '0', check the fan on the converter. 2. If the LCL filter fan is not operating, check its DC power supply.
33	AutoReset Lim	3		The AFE unsuccessfully attempted to reset a fault and resumed running for the programmed number in parameter 053 [Auto Rstrt Tries]. You can enable/disable this fault with parameter 120 [Fault Config].	Correct the cause and manually clear the fault.
34	CAN Bus Flt	2		A sent message was not acknowledged.	1. Cycle the power. 2. Replace the main control board.
35	Application	1		Problem in application software with task overload.	Contact technical support (see page 135).
37	HeatsinkUndTp	1		The ambient temperature is too low.	Raise the ambient temperature.
44	Device Change	2		The new power unit or option board that is installed is a different type.	Clear the fault and reset the AFE to the default configurations.
45	Device Add	2		A new option board was added.	Clear the fault.
47	NvsReadChksum	2		There is an error reading parameters 019 [Motoring MWh], 020 [Regen MWh], and 021 [Elapsed Run Time] from EEPROM.	1. Cycle the power. 2. Replace the main control board.
54	Zero Divide	2		This event occurred because a mathematical function had a dividend of zero.	1. Cycle the power. 2. Replace the main control board.
58	Start Prevent	1		Startup has been prevented.	1. Cancel prevention of startup if the cancellation can be done safely. 2. Remove Run Request.
65	I/O Removed	2		An I/O option board has been removed.	Clear the fault.
70	Power Unit	1		One or more of the IGBTs were operating in the active region instead of desaturation. Excessive transistor current or insufficient base drive voltage causes this fault.	Clear the fault.
71	Periph Loss	2		The 20-COMM-*x* communication adapter has a fault on the network side.	Check the DPI device event queue and corresponding fault information for the device.

Table 21 - Fault/Alarm Types, Descriptions, and Actions (Continued)

No.	Name	Fault	Alarm	Description	Action *(if appropriate)*
81	Port DPI Loss	2		The DPI port has stopped communicating. A SCANport™ device was connected to a drive operating DPI devices at 500k baud.	1. If the adapter was not intentionally disconnected, check the wiring to the port. Replace the wiring, port expander, adapters, main control board, or complete AFE as required. 2. Check the HIM connection. 3. If an adapter was intentionally disconnected and the [Logic Mask] bit for that adapter is set to '1', this fault occurs. To disable this fault, set the bit in parameter [Logic Mask] for the adapter to '0'.
94	Hardware Enbl	2		An enable signal is missing from the control terminal block.	1. Check the control wiring. 2. Check the position of the hardware enable jumper. 3. Check the digital input programming.
100	Param Chksum	2		The checksum read from the main control board does not match the checksum calculated.	1. Restore the AFE to the default configurations. 2. Cycle the power. 3. Reload User Set, if used.
104	PwrBrd Chksum	2		The checksum read from the EEPROM does not match the checksum calculated from the EEPROM data.	1. Cycle the power. 2. Contact technical support (see page 135). 3. If the problem persists, replace the AFE.
106	MCB-PB Config	2		The AFE rating information that is stored on the power board is incompatible with the main control board.	1. Reset the fault or cycle the power. 2. Replace the main control board.
107	New IO Option	2		A new option board was added to the main control board.	1. Restore the AFE to default configurations. 2. Reprogram parameters as necessary.
113	Fatal App	2		A fatal application error has occurred.	Replace the main control board.
120	I/O Change	2		An option board has been replaced.	Reset the fault.
121	I/O Comm Loss	2		An I/O board lost communications with the main control board.	1. Check the connector. 2. Check for induced noise. 3. Replace I/O board or main control board.

Table 21 - Fault/Alarm Types, Descriptions, and Actions (Continued)

No.	Name	Fault	Alarm	Description	Action *(if appropriate)*
125	LCL OverTemp	1		The LCL filter has been overheated or the signal is not connected to input.	Check the LCL filter sensor connections, the fan, and fan power supply.
				There are nine total thermal switches that are connected in series to monitor temperature inside the coil of each filter inductor. 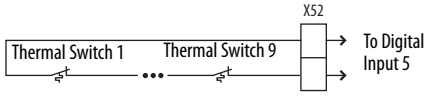 X52 is on the LCL filter. 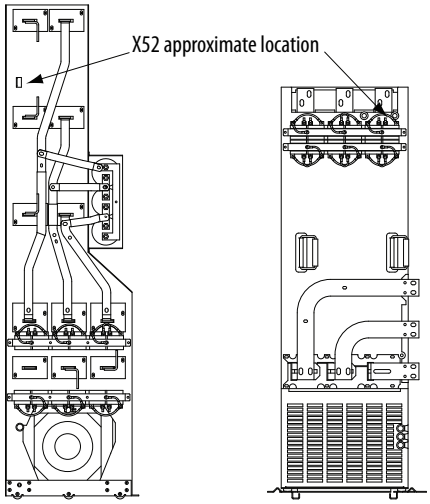 Frame 10 LCL Filter Frame 13 LCL Filter	
128	Contact Fdbk		2	The input of the acknowledge signal from the main contactor is missing.	Check if the main contactor is closed. Check the wiring of the feedback signal.
133	DigInConflict		2	Digital input functions are in conflict.	Check the parameter settings to correct the problem.
138	DCRefLowLim		1	DC voltage reference is less than the limit in parameter 080 [DC Ref Lo Lmt].	Check the parameter setting.
139	DCRefHighLim		1	DC voltage reference exceeds the limit in parameter 081 [DC Ref Hi Lmt].	Check the parameter setting.
140	DCBusLoAlarm		1	DC voltage is less than the value set by parameter 078 [DC Bus Lo Alarm].	Check the parameter setting.
141	DCBusHiAlarm		1	DC voltage exceeds the value set by parameter 079 [DC Bus Hi Alarm].	Check the parameter setting.

Table 22 - Fault/Alarm Cross-reference – By Name

Fault/Alarm		Fault	Alarm
Name	No.		
AC OverCurr	12	x	
Anlg In Loss	29	x	x
Application	35	x	
AutoReset Lim	33	x	
Auxiliary In	2	x	
CAN Bus Flt	34	x	
Contact Fdbk	128		x
Converter Flt	14	x	
DC OverVolt	5	x	
DC UnderVolt	4	x	x
DCBusHiAlarm	141		x
DCBusLoAlarm	140		x
DCRefHighLim	139		x
DCRefLowLim	138		x
Device Add	45	x	
Device Change	44	x	
DigIn Cnflct	133		x
Fan Cooling	32	x	
Fatal App	113	x	
Ground Fault	13	x	
Hardware Enbl	94	x	
HeatsinkOvrTp	8	x	x
HeatsinkUndTp	37	x	

Fault/Alarm		Fault	Alarm
Name	No.		
I/O Change	120	x	
I/O Comm Loss	121	x	
I/O Removed	65	x	
IGBT OverTemp	9	x	
IGBT Temp Hw	31	x	
LCL OverTemp	125	x	
LineSync Fail	17	x	x
MCB-PB Config	106	x	
MicroWatchdog	30	x	
New IO Option	107	x	
NvsReadChksum	47	x	
Overload	7	x	
Param Chksum	100	x	
Periph Loss	71	x	
Phase Loss	21	x	
Port DPI Loss	81	x	
Power Unit	70	x	
PrechargeActv	1		x
PwrBrd Chksum	104	x	
Start Prevent	58	x	
System Fault	10	x	
Unbalanced PU	19	x	
Zero Divide	54	x	

Clear the Alarms

Alarms are automatically cleared when the condition that caused the alarm is no longer present.

Common Symptoms and Corrective Actions

Table 23 - AFE Does Not Start from Start or Run Inputs Wired to the Terminal Block

Causes	Indication	Corrective Action
AFE is faulted	Flashing red status light	Clear fault. • Press the HIM (Stop) key. • Cycle power to the AFE. • Set parameter 121 [Fault Clear] to '1' (Clear Faults); see page 109. • 'Clear Faults' by using the HIM diagnostic menu.
Incorrect input wiring; see Control Wiring on page 40 or Control Wiring on page 74 for wiring examples. **IMPORTANT:** Jumper between terminals 17, 18, and 20 is required when using the 24V DC internal supply.	None	Wire inputs correctly and/or install jumper.

Causes	Indication	Corrective Action
Incorrect digital input programming.	None	Program [Digital Inx Sel] for correct inputs (see page 115). Run programming can be missing.
There is some other start inhibit.	Check status bits of parameter 100 [Start Inhibits].	Correct the source of the inhibit.

Table 24 - Instability in the AC Line Input Current and DC Bus Voltage

Causes	Indication	Corrective Action
AC line voltage more than 5% above normal.	Instability in AC line current and DC bus voltage. Can trip on fault F7 'Overload'.	Increase parameter 060 [DC Volt Ref] proportional to the percentage of the AC line voltage above nominal.
Negative reactive I Ref on parameter 065 [Reactive I Ref] with a soft (high impedance) AC line.	Instability in AC line current and DC bus voltage. Can trip an F7 overload.	Change parameter 065 [Reactive I Ref] value to zero. Verify if the AFE is running on a soft line per AC line source considerations.

Figure 44 - AFE Start Sequence Troubleshooting Diagram

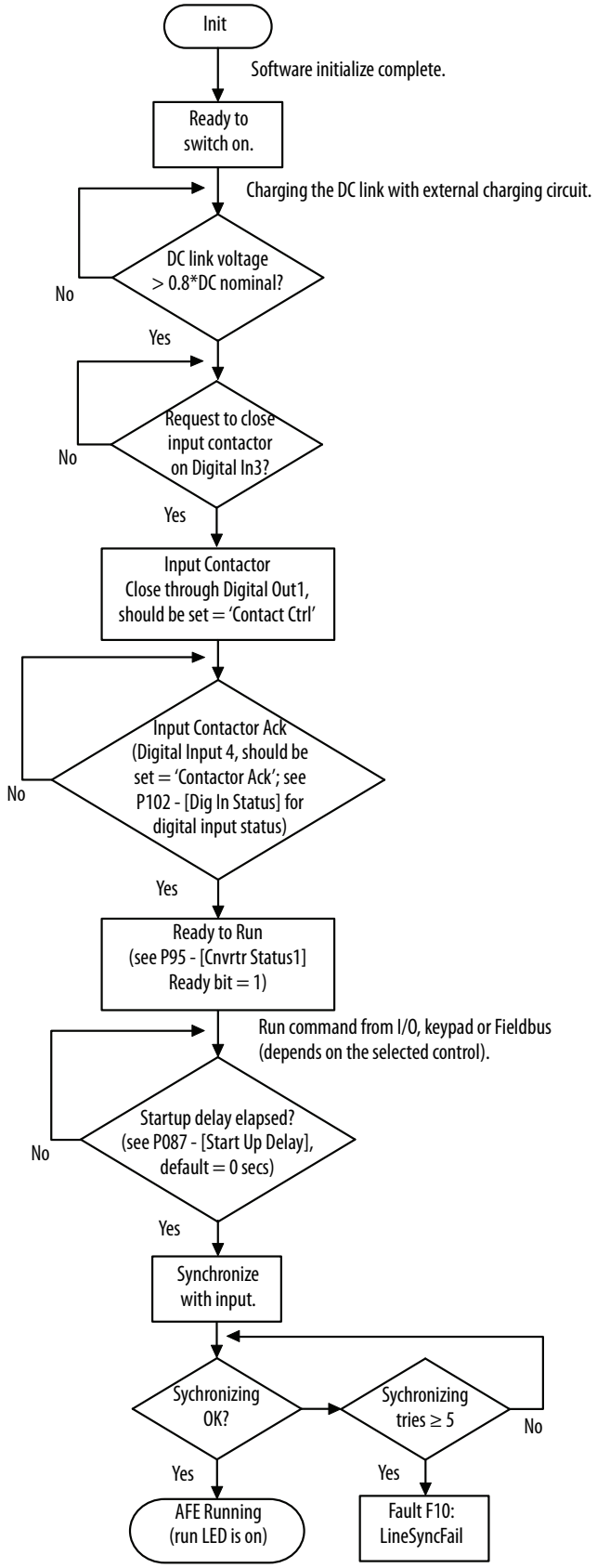

Figure 45 - AFE Fault Handling Sequence Troubleshooting Diagram

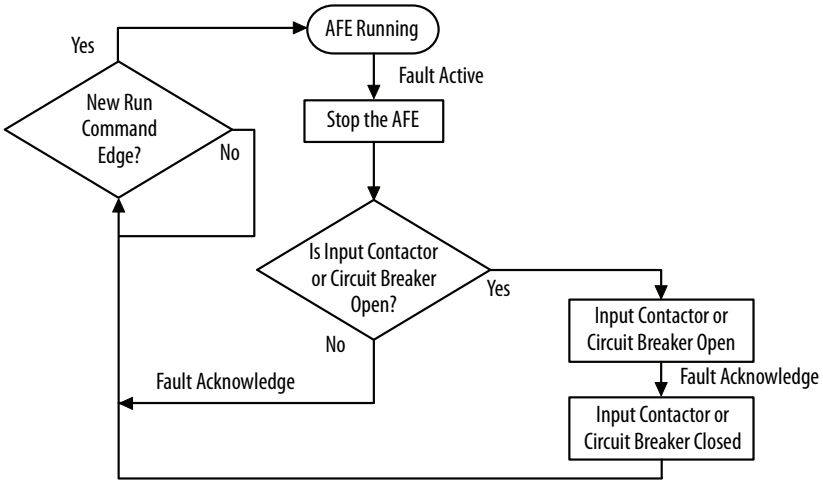

Technical Support

When you contact technical support, be prepared to provide this information:

- Order number
- Product catalog number and drives series number (if applicable)
- Product serial number
- Firmware revision level (verify with parameter 033 [Control SW Ver])
- Most recent fault code
- Your application

The data that are contained in the following parameters helps in initial troubleshooting of a faulted drive. Record the data provided for each listed parameter in this table.

Parameter	Name	Description	Recorded Parameter Data
104	Fault Frequency	Captures and displays the AC line frequency at time of last fault.	
105	Fault Total Curr	Captures and displays the DC bus amps at time of last fault.	
106	Fault Bus Volts	Captures and displays the DC bus voltage at time of last fault.	
107	Fault Temp	Captures and displays the heatsink temperature at time of last fault.	
108	Status 1 @ Fault	Captures and displays [Cnvrtr Status 1] bit pattern at time of last fault.	
109	Status 2 @ Fault	Captures and displays [Cnvrtr Status 2] bit pattern at time of last fault.	
110	Alarm 1 @ Fault	Captures and displays [Cnvrtr Alarm 1] bit pattern at time of last fault.	
111	Alarm 2 @ Fault	Captures and displays [Cnvrtr Alarm 2] bit pattern at time of last fault.	
124	Fault 1 Code	Displays a code that represents the fault that tripped the AFE. The codes appear in these parameters in the order they occur ([Fault 1 Code] equals the most recent fault).	
126	Fault 2 Code		
128	Fault 3 Code		
130	Fault 4 Code		
125	Fault 1 Time	Displays the time between initial unit power-up and the occurrence of the associated trip fault. Can be compared to [Power Up Marker] for the time from the most recent power-up. [Fault x Time] - [Power Up Marker] = Time difference to the most recent power-up. A negative value indicates that fault occurred before most recent power-up. A positive value indicates that fault occurred after most recent power-up. Time stamp of the fault occurrence.	
127	Fault 2 Time		
129	Fault 3 Time		
131	Fault 4 Time		
137…140	Alarm Code 1…4	Displays a code that represents a converter alarm. The codes appear in the order they occur ([Alarm 1 Code] = the most recent alarm). A time stamp is not available with alarms.	

Notes:

Supplemental Information

Topic	Page
Specifications	137
Derating Guidelines	139
AFE Current Ratings and Watts Loss	140
Fusing and Circuit Breakers for AFE in IP20 2500 MCC Style Enclosure	141
Fusing and Circuit Breakers for AFE in IP21 Rittal Enclosure	142
Dimensions	143
DPI Communication Configurations	152

Specifications

This table provides certification information.

Certifications	Description
C-UL-US	UL and C-UL Listed to UL508C and CAN/CSA - 22.2 No. 14-05. UL Listing is applicable up to 600V AC.
CE	Marked for all applicable European Directives (1) EMC Directive (2014/35/EU) EN 61800-3 Adjustable speed electrical power drive systems - Part 3: EMC requirements and specific test methods Low Voltage Directive (2014/30/EU) EN 61800-5-1 Adjustable speed electrical power drive systems - Part 5-1: Safety requirements - Electrical, thermal and energy
KCC	Korean KC registration(2)
Regulatory compliance mark (RCM)	Certified by Rockwell Automation to be in conformity with the requirements of the applicable Australian legislation and standards referenced here: IEC 61800-3
The AFE is also designed to meet the following specifications: NFPA 70 - US National Electrical Code NFPA 79 - Electrical Standard for Industrial Machinery 2002 Edition NEMA ICS 7.0 - Safety standards for Construction and Guide for Selection, Installation and Operation of Adjustable Speed Drive Systems	

(1) Applied noise impulses can be counted with the standard pulse train. These applied noise impulses can cause erroneously high [Pulse Freq] readings.

(2) Registration KCC-REM-RAA-20A. See the certificate of registration for specific drive catalog numbers that have this certification.

Category	Specification				
Protection	**AFE Voltage Class**	**380/400V**	**480V**	**600V**	**690V**
	Bus overvoltage trip	911V DC	911V DC	1200V DC	1200V DC
	Bus undervoltage shutoff/fault	333V DC	333V DC	461V DC	461V DC
	Heat sink thermistor	Monitored by microprocessor overtemp trip			
	Ground fault protection	Yes			
	Input phase loss protection	Yes			
	Input overcurrent protection	Yes			
	Overtemperature protection	Yes			
	LCL filter overtemperature protection	Yes			
	Line transients	Up to 6000V peak per IEEE C62.41-1991			
	Control logic noise immunity	Showering arc transients up to 1500V peak			
	Ground fault trip	DC bus-to-ground current exceeds par 082 [Ground I Lvl] value			
Environment	Altitude	1000 m (3300 ft) max. without derating			
	Max surrounding air temperature without derating	0…40 °C (32…104 °F); Frame 13 600/690V AFE is rated at 35 °C (95 °F). See Derating Guidelines on page 139 for derating above 35 °C (95 °F).			
	Storage temperature (all constructions)	–40…+60 °C (–40…+140 °F)			
	Atmosphere	**Important:** The AFE unit **must not** be installed in an area where the ambient atmosphere contains volatile or corrosive gas, vapors, or dust. If the AFE is not going to be installed for some time, store the AFE in an area where it is not exposed to a corrosive atmosphere.			
	Relative humidity	5…95% noncondensing			
	Shock (non-operational)	15G peak for 11 ms duration EN50178 / EN60068-2-27			
	Vibration	1 mm (0.039 in.) displacement, 1G peak EN50178 / EN60068-2-6			
	Sound: Frame 10 Frame 13	 71 dB at 1 m (3.28 ft) 80 dB at 1 m (3.28 ft)			
Electrical	AC input voltage tolerance	±10%			
	Frequency tolerance	48…63 Hz			
	Input phases	Three-phase input provides full rating for all AFEs. The AFE cannot be operated with single-phase input.			
	Displacement power factor	1.0 default across entire range			
	Efficiency	97.5% at rated amps, nominal line volts			
	Short circuit rating: • AFE Frame 10 in IP20 • AFE Frame 13 in IP20 • AFE in IP21 or AFE IP00	 • 100 kA for 400/480V unit; 65 kA for 600/690V unit • 100 kA for 400/480V unit; 100 kA for 600/690V unit • Determined by AIC rating of installed fuse/circuit breaker			
Control	**AFE Voltage Class**	**380/400V**	**480V**	**600V**	**690V**
	DC output voltage range	462…702	583…842	700…932	802…1071
	Method	Sine-coded PWM			
	Carrier frequency	3.6 kHz			
	Intermittent overload: • Normal duty • Heavy duty	 • 110% overload capability for up to 1 minute • 150% overload capability for up to 1 minute (this heavy-duty rating does not apply to Frame 13 600/690V AFEs			
	Current limit capability	Current limit programmable from 20…150% of rated input current.			

Derating Guidelines

The following charts illustrate derating guidelines based on conditions.

Ambient Temperature/Load

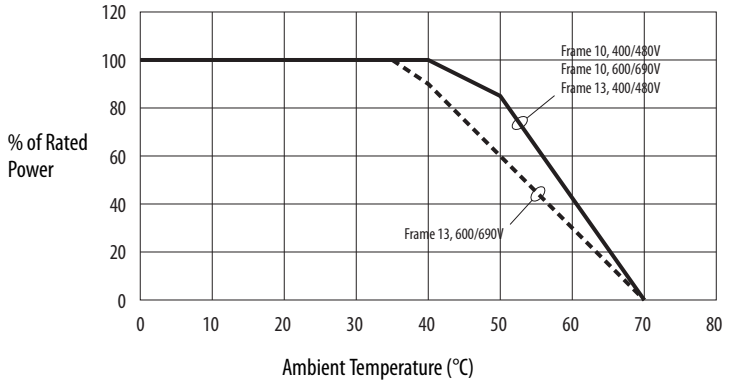

Altitude/Load 400/480V AC Input

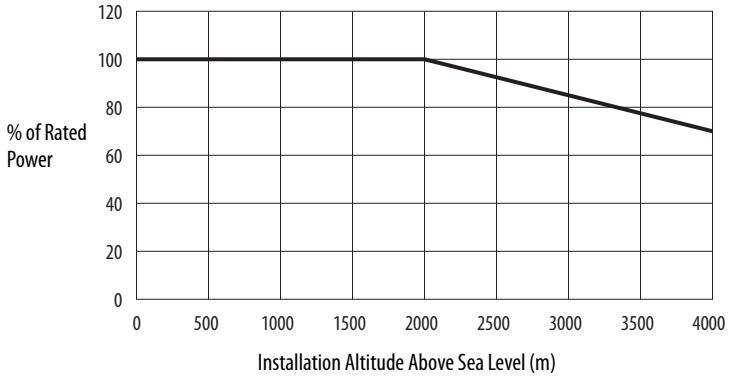

Altitude/Load 600/690V AC Input

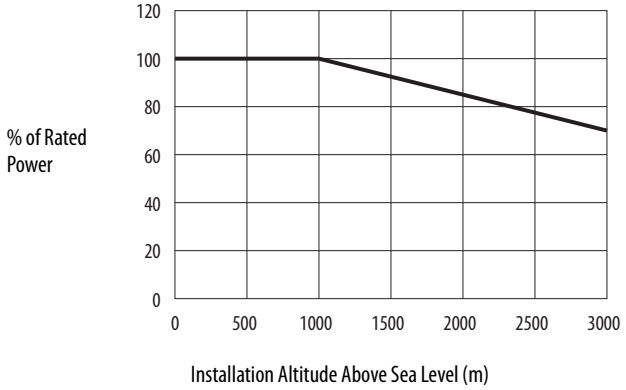

AFE Current Ratings and Watts Loss

The following tables provide PowerFlex Active Front End current ratings (including continuous and 1 minute) and typical watts loss.

400 Volt AC Input Ratings

AFE Catalog Number	Frame Size	kW Rating		PWM Freq.	AC Input Amps		DC Output Amps	Typical Watts Loss
		ND	HD	kHz	Cont.	1 Min.	Cont.	
20YD460…	10	309	—	3.6	460 A	506 A	520 A	8000 W
		—	258	3.6	385 A	578 A	435 A	
20YD1K3…	13	873	—	3.6	1300 A	1430 A	1469 A	23,000 W
		—	772	3.6	1150 A	1725 A	1299 A	

480 Volt AC Input Ratings

AFE Catalog Number	Frame Size	Hp Rating		PWM Freq.	AC Input Amps		DC Output Amps	Typical Watts Loss
		ND	HD	kHz	Cont.	1 Min.	Cont.	
20YD460…	10	497	—	3.6	460 A	506 A	520 A	8000 W
		—	416	3.6	385 A	578 A	435 A	
20YD1K3…	13	1404	—	3.6	1300 A	1430 A	1469 A	23,000 W
		—	1242	3.6	1150 A	1725 A	1299 A	

600 Volt AC Input Ratings

AFE Catalog Number	Frame Size	Hp Rating		PWM Freq.	AC Input Amps		DC Output Amps	Typical Watts Loss
		ND	HD	kHz	Cont.	1 Min.	Cont.	
20YF325…	10	439	—	3.6	325 A	358 A	367 A	8000 W
		—	324	3.6	240 A	360 A	272 A	
20YF1K0…	13 (1)	1390	—	3.6	1030 A	1133 A	1164 A	26,000 W

(1) Heavy-duty rating does not apply to Frame 13 600/690V AFE.

690 Volt AC Input Ratings

AFE Catalog Number	Frame Size	kW Rating		PWM Freq.	AC Input Amps		DC Output Amps	Typical Watts Loss
		ND	HD	kHz	Cont.	1 Min.	Cont.	
20YF325…	10	376	—	3.6	325 A	358 A	367 A	8000 W
		—	278	3.6	240 A	360 A	272 A	
20YF1K0…	13 (1)	1193	—	3.6	1030 A	1133 A	1164 A	26,000 W

(1) Heavy-duty rating does not apply to Frame 13 600/690V AFE.

Fusing and Circuit Breakers for AFE in IP20 2500 MCC Style Enclosure

AC Input Fuse and Circuit Breaker Ratings

The tables in this section provide the recommended AC input line fuses and circuit breakers. The AFE in an IP20 2500 MCC Style enclosure includes the recommended AC input fusing and circuit breaker.

400/480 Volt AC Fusing and Circuit Breaker Ratings

Frame Size	Fuse Rating		Main Circuit Breaker Rating	
	Amps	Bussman Type	Amps	ABB Type
10	800 A	170M6696	600 A	T5L600BW
13	2200 A	170M7090	1600 A	T8VBC3FC000000xx

600/690 Volt AC Fusing and Circuit Breaker Ratings

Frame Size	Fuse Rating		Main Circuit Breaker Rating	
	Amps	Bussman Type	Amps	ABB Type
10	630 A	170M6694	400 A	T5L400BW
13	1800 A	170M7532	1600 A	T8VBC3FC000000xx

DC Bus Output Fuse Ratings

DC Bus Output fuses must be used for short circuit protection. The tables in this section provide the ratings of the DC Bus Output fuses used for the AFE in an IP20 2500 MCC Style enclosure.

465…800 Volt DC Fusing

Frame Size	Fuse Rating	
	Amps	Bussman Type
10	1100 A	170M6499
13	1100 A (2 per phase)	170M6499

640…1100 Volt DC Fusing

Frame Size	Fuse Rating	
	Amps	Bussman Type
10	630 A	170M6454
13	630 A (2 per phase)	170M6454

Fusing and Circuit Breakers for AFE in IP21 Rittal Enclosure

AC Input Fuse and Circuit Breaker Ratings

The tables in this section provide the recommended AC input line fuses and circuit breakers. The AFE in an IP21 Rittal enclosure includes the recommended MCCB (motor-controlled circuit breaker).

400/480 Volt AC Fusing and MCCB Ratings

Frame Size	Fuse Ratings			MCCB Ratings	
	Amps	Bussman Type (1)	Ferraz Shawmut Type	Amps	ABB Type
10	800	—	NH3UD69V800PV	630	T5H630FF3LS
	1000	170M6277	—		
13	2200	—	PC44UD75V22CTQ	1600	T7516FF3PR231LS
	1000 (3 per phase)	170M6277	—		

(1) Suitable for replacement fuse.

600/690 Volt AC Fusing and MCCB Ratings

Frame Size	Fuse			MCCB Ratings	
	Amps	Bussman Type (1)	Ferraz Shawmut Type	Amps	ABB Type
10	700	—	PC73UD13C630PA	400	T5H400LS
	700	170M6305	—		
13	1800	—	PC84UD12C18CTQ	1600	T7516FF3PR231LS
	700 (3 per phase)	170M6305	—		

(1) Suitable for replacement fuse.

DC Bus Output Fuse Ratings

DC Bus Output fuses must be used for short circuit protection. The tables in this section provide the ratings of the DC Bus Output fuses used for the AFE in an IP21 Rittal enclosure.

465…800 Volt DC Fusing

Frame Size	Fuse		
	Amps	Bussman Type (1)	Ferraz Shawmut Type
10	1100	—	PC73UD95V11CTF
	1250	170M6566	—
13	2400	—	PC84UD11C24CTQ
	1250 (2 per phase)	170M6566	—

(1) Suitable for replacement fuse.

640…1100 Volt DC Fusing

Frame Size	Fuse		
	Amps	Bussman Type (1)	Ferraz Shawmut Type
10	630	—	PC73UD13C630TF
	700	170M6305	—
13	2000	—	PC84UD11C20CTQ
	1000 (2 per phase)	170M8510	—

(1) Suitable for replacement fuse.

Dimensions

Figure 46 - AFE Frame 10 in IP20 2500 MCC Style Enclosure Dimensions

Dimensions are in millimeters and (inches).

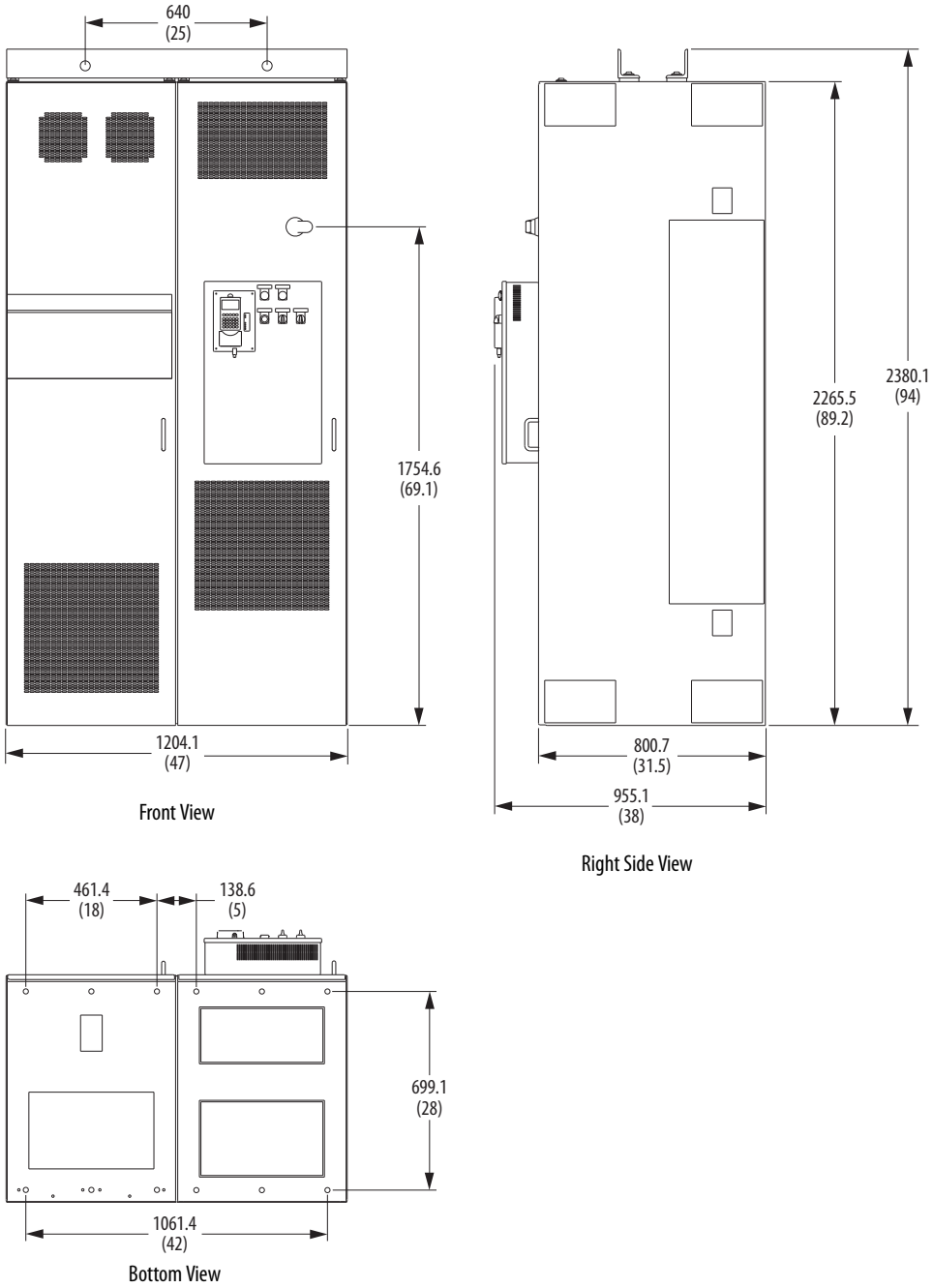

Overall Dimensions, mm (in.)			Weight, kg (lb)
Height	**Width**	**Depth**	
2380.1 (94)	1204.1 (47)	955.1 (38)	1035 (2282)

Figure 47 - AFE Frame 13 in IP20 2500 MCC Style Enclosure Dimensions

Dimensions are in millimeters and (inches).

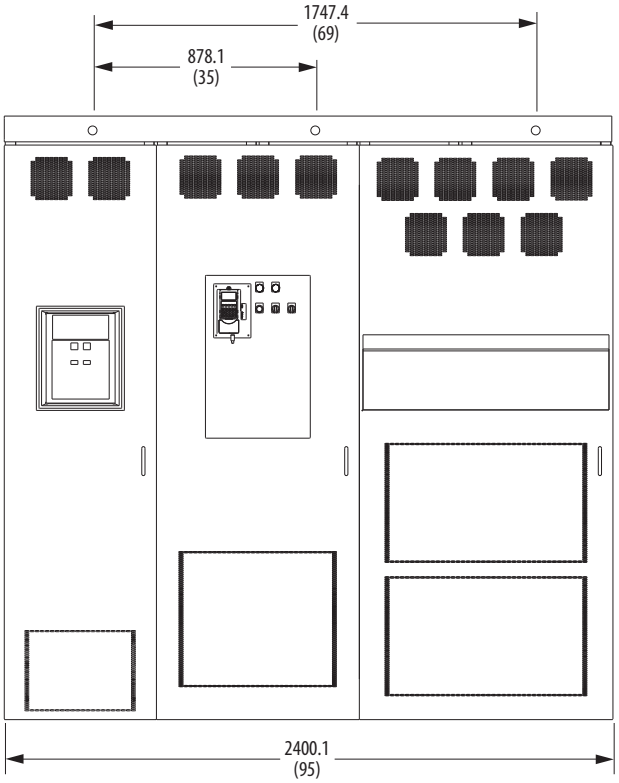

Front View

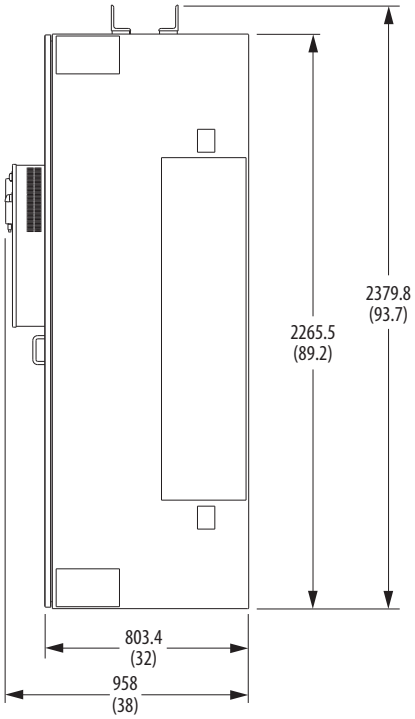

Right Side View

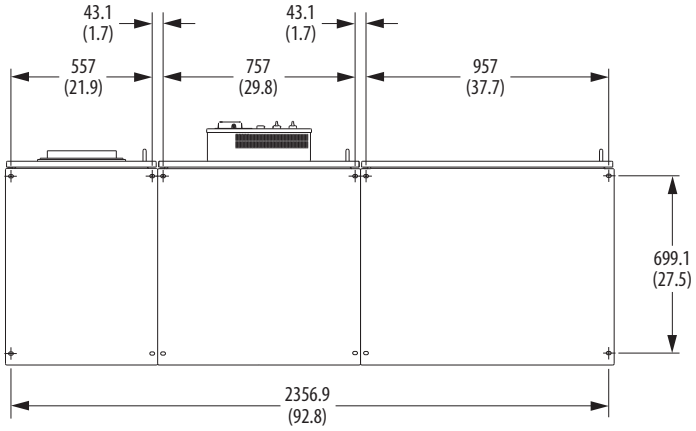

Bottom View

Overall Dimensions, mm (in.)			Weight , kg (lb)
Height	**Width**	**Depth**	
2379.8 (93.7)	2400.1 (95)	958 (38)	2200 (4850)

Figure 48 - AFE Frame 10 in IP21 Rittal Enclosure Dimensions

Dimensions are in millimeters and (inches).

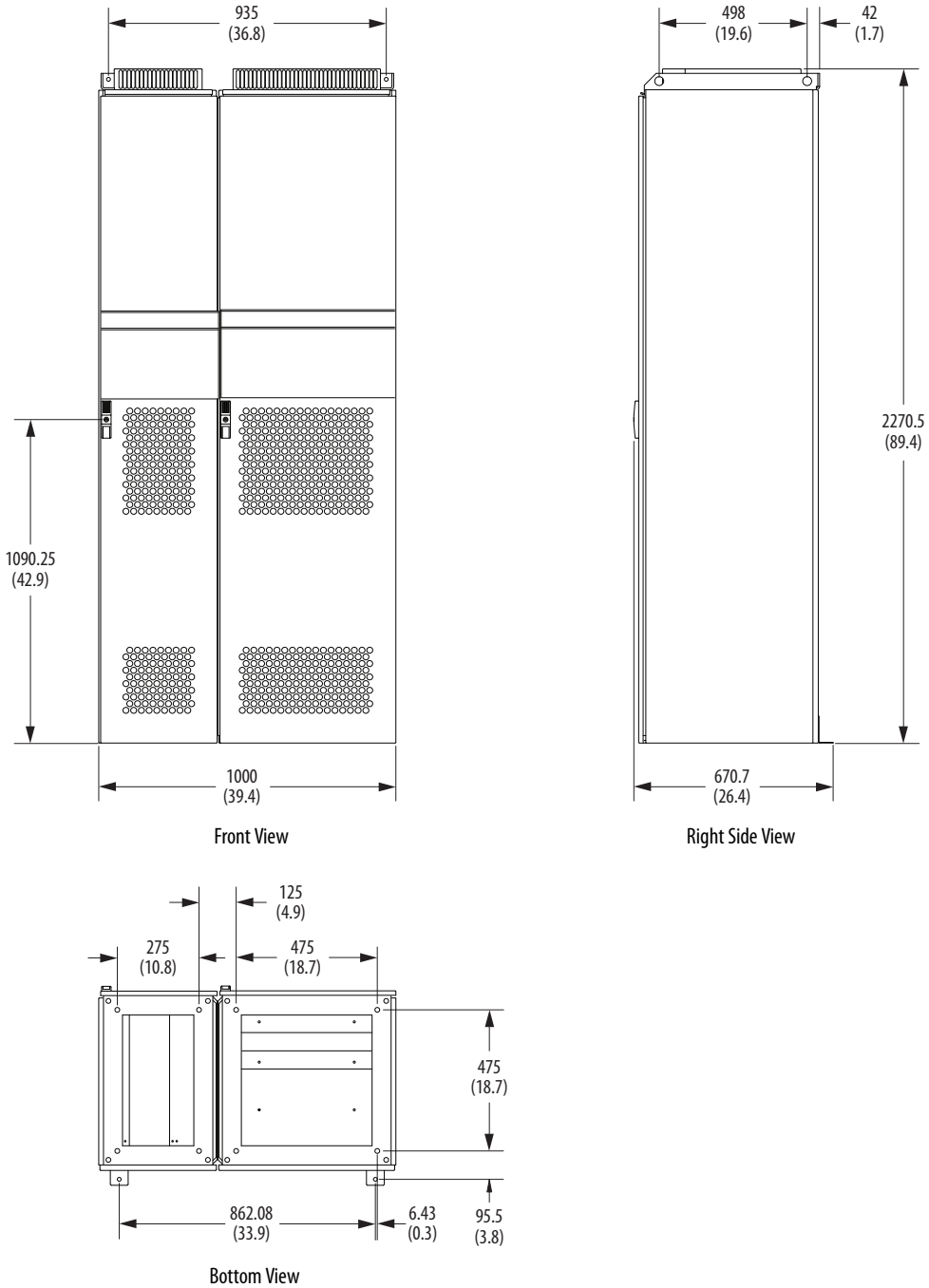

Overall Dimensions, mm (in.)			Weight , kg (lb)
Height	**Width**	**Depth**	
2270.5 (89.4)	1000 (39.4)	670.7 (26.4)	600 (1323)

Figure 49 - AFE Frame 13 in IP21 Rittal Enclosure Dimensions

Dimensions are in millimeters and (inches).

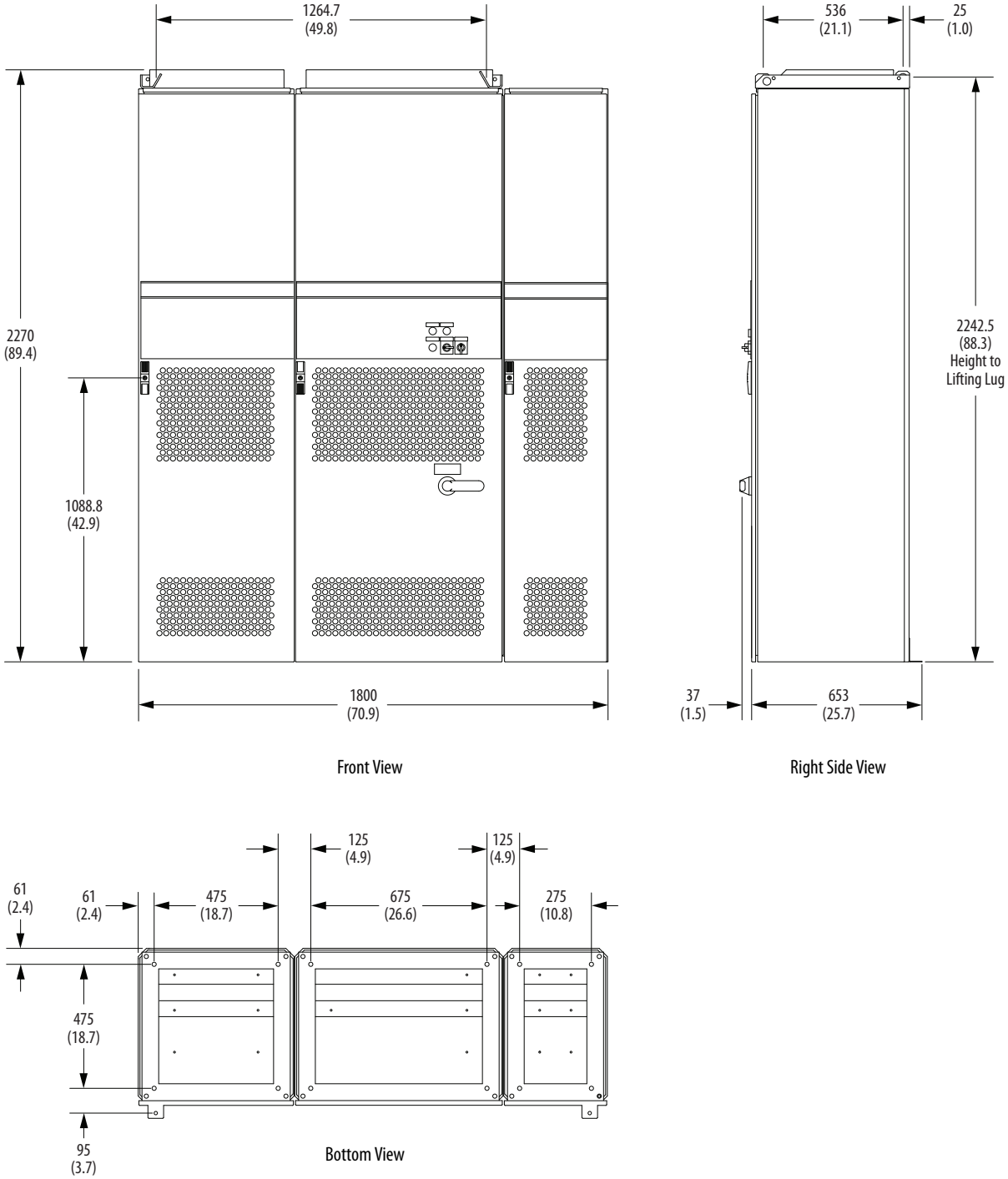

Overall Dimensions, mm (in.)			Weight, kg (lb)
Height	**Width**	**Depth**	
2270.5 (89.4)	1800 (70.9)	690 (27.2)	1280 (2821.9)

Figure 50 - AFE Frame 10 LCL Filter Dimensions

Dimensions are in millimeters and (inches).

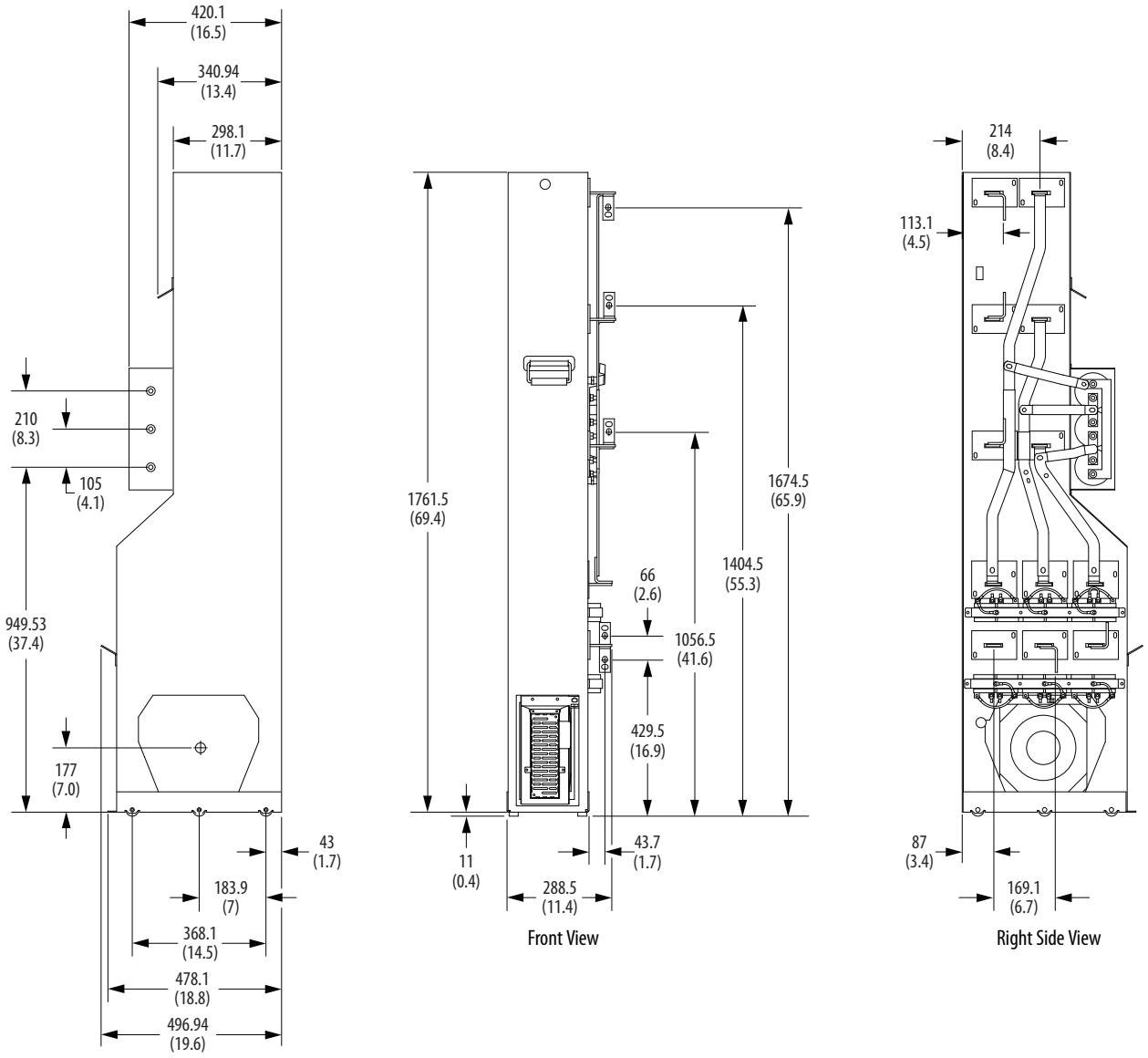

AFE Input Voltage	Overall Dimensions, mm (in.)			Weight, kg (lb)
	Height	Width	Depth	
400/480V	1761.5 (69.4)	288.5 (11.4)	496.9 (19.6)	263 (580)
600/690V				304 (670)

Figure 51 - AFE Frame 13 LCL Filter Dimensions

Dimensions are in millimeters and (inches).

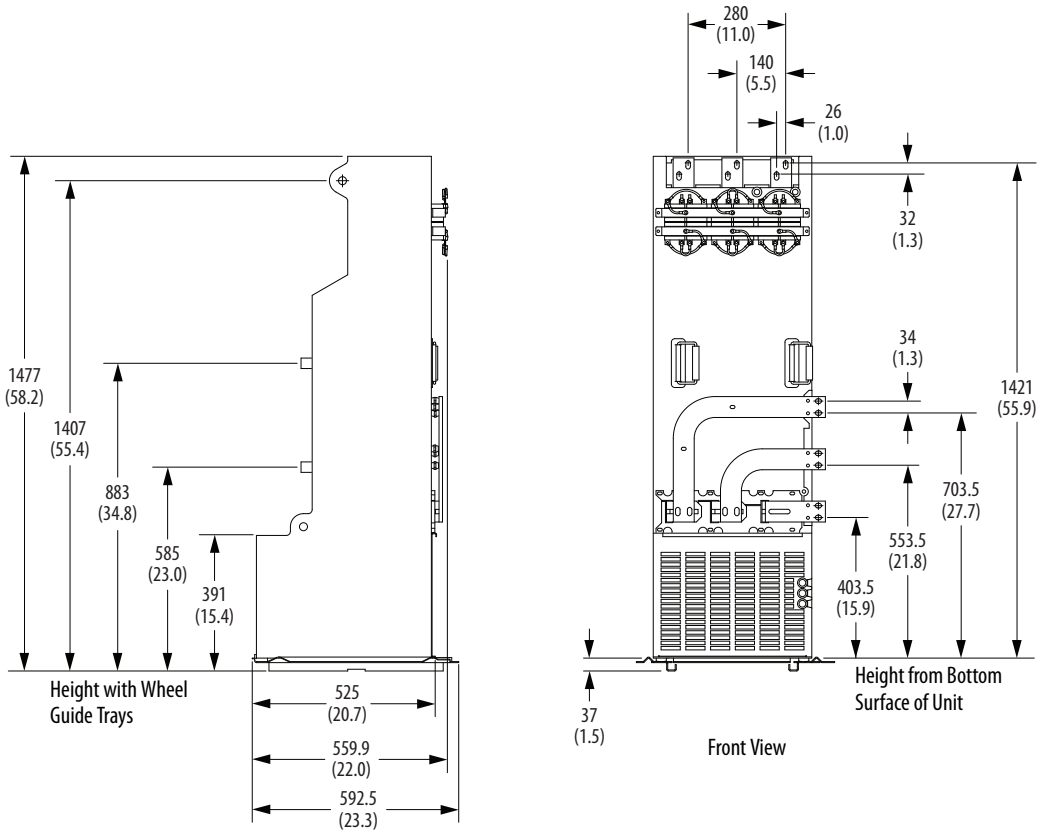

AFE Input Voltage	Overall Dimensions, mm (in.)			Weight, kg (lb)
	Height	Width	Depth	
400/480V	1442 (56.8)	494 (19.4)	525 (20.7)	477 (1052)
600/690V				473 (1043)

Figure 52 - AFE Frame 10 Power Structure Dimensions

Dimensions are in millimeters and (inches).

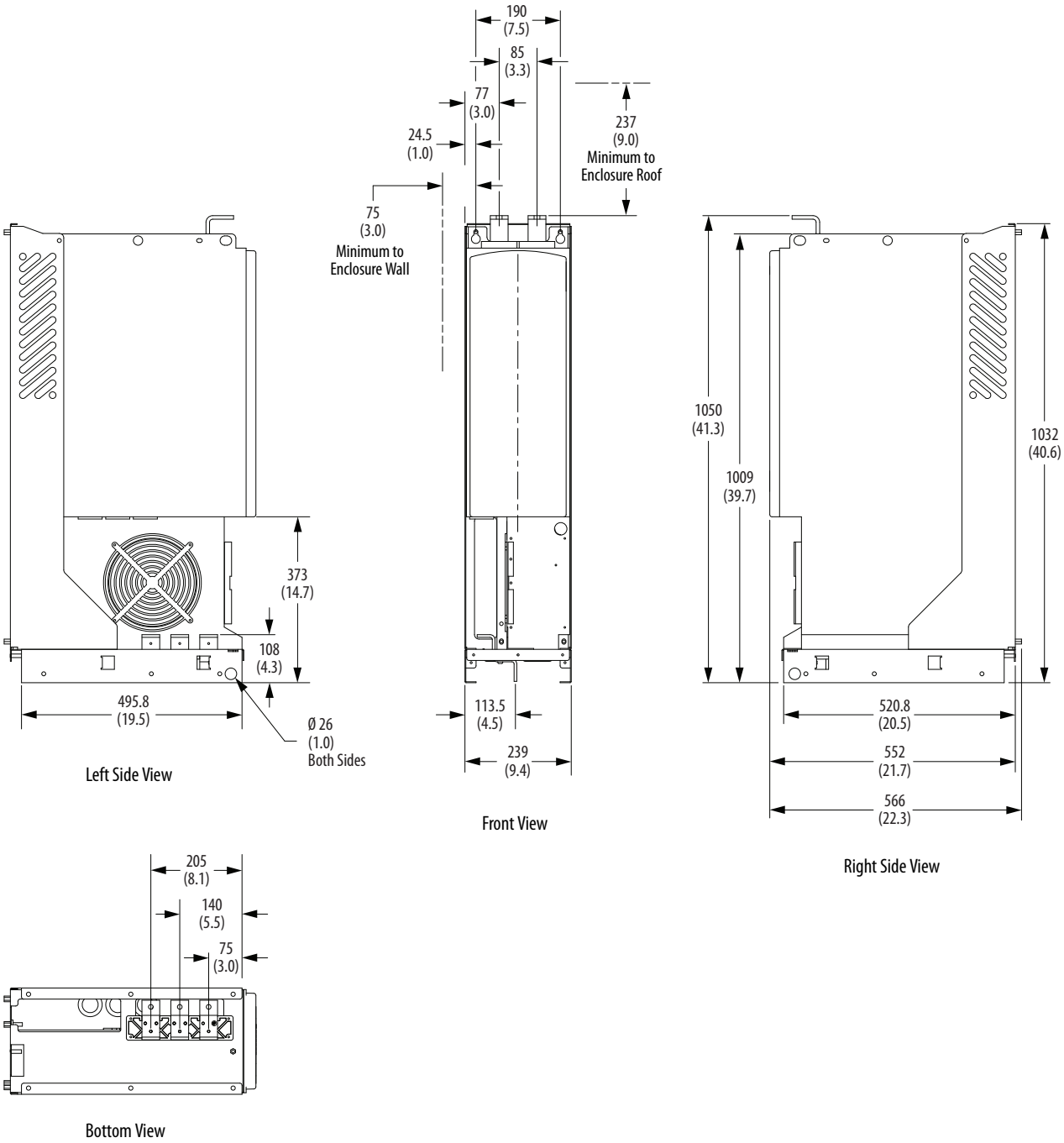

Overall Dimensions, mm (in.)			Weight, kg (lb)
Height	**Width**	**Depth**	
1050 (41.3)	239 (9.4)	556 (22.3)	100 (221)

Figure 53 - AFE Frame 13 Power Structure Dimensions

Dimensions are in millimeters and (inches).

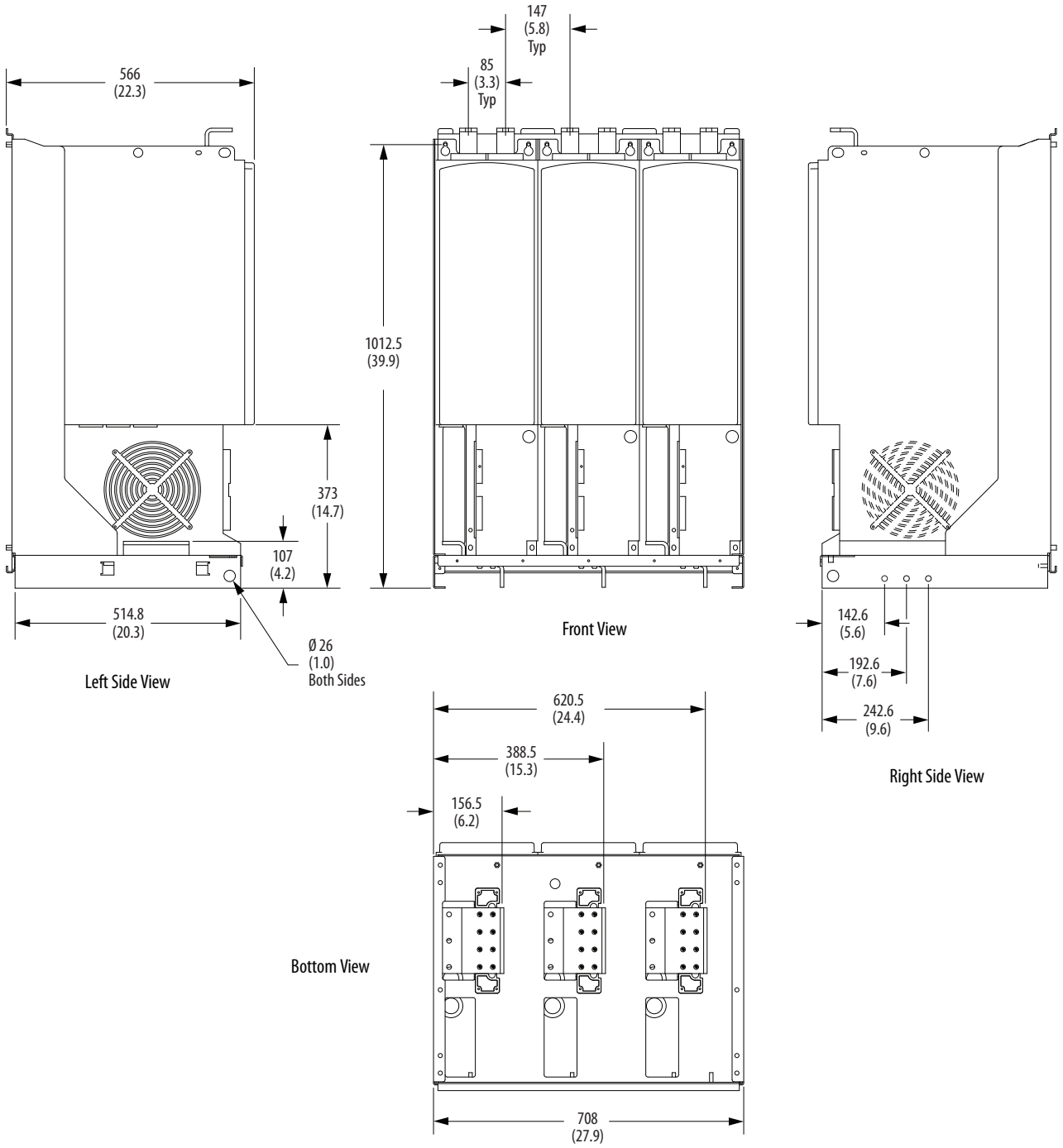

Overall Dimensions, mm (in.)			Weight, kg (lb)
Height	**Width**	**Depth**	
1032 (40.6)	708 (27.9)	553 (21.8)	306 (675)

Figure 54 - Control Box Dimensions (only for AFE in IP21 Rittal Enclosure)

Dimensions are in millimeters and (inches).

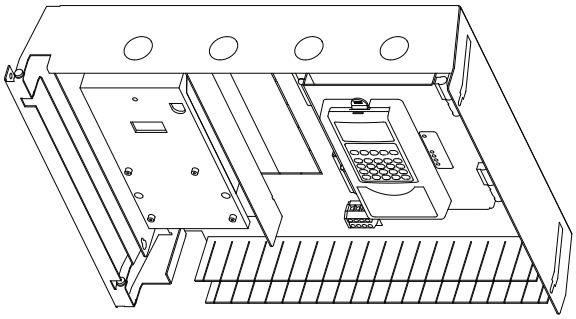

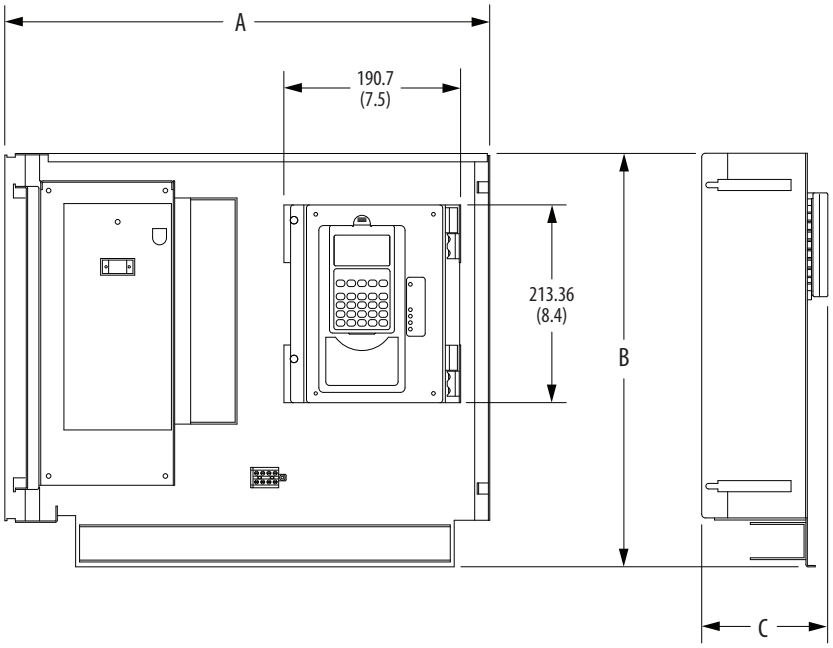

Frame Size	Overall Dimensions, mm (in.)		
	A	B	C
10	532.24 (20.6)	446 (17.6)	135.96 (5.4)
13	733.67 (28.9)	448 (17.6)	135.96 (5.4)

DPI Communication Configurations

This section contains information for how to use DPI™ communication with the PowerFlex Active Front End.

Typical Programmable Controller Configurations

IMPORTANT If programs are written that continuously write information to the AFE control, be sure to format the block transfer correctly. If attribute 10 is selected for the block transfer, values are written only to RAM and are not saved by the drive. Attribute 10 is the preferred attribute for continuous transfers.

If attribute 9 is selected, each program scan completes a write to the drives nonvolatile memory (EEPROM). Because the EEPROM accommodates only a fixed number of writes, excessive continuous block transfers can quickly damage the EEPROM. Therefore, do **not** assign attribute 9 to continuous block transfers. See the individual communication adapter user manual for details.

Logic Command Word for PowerFlex 700/700H/700S Drives

Logic Bits																	
15	14	13	12	11	10	9	8	7	6	5	4	3	2	1	0	Command	Description
															x	Stop	0 = Not Stop 1 = Normal Stop
														x		Start (1)	0 = Not Start 1 = Start
													x			Reserved	
												x				Clear Fault (2)	0 = Not Clear Fault 1 = Clear Fault
											x					Reserved	
										x						Reserved	
									x							Reserved	
								x								Cmd LogicOut	0 = Network-controlled Digital Output off 1 = Network-controlled Digital Output on
							x									Reserved	
						x										Reserved	
					x											Reserved	
				x												Reserved	
			x													Reserved	
		x														Reserved	
	x															Reserved	
x																Reserved	

(1) A Not Stop condition (logic bit 0 = 0, logic bit 8 = 0, and logic bit 9 = 0) must first be present before a 1 = Start condition starts the AFE.
(2) To perform this command, the value must switch from '0' to '1'.

Logic Status Word for PowerFlex 700/700H/700S Drives

Logic Bits																	
15	14	13	12	11	10	9	8	7	6	5	4	3	2	1	0	Status	Description
															x	Ready	0 = Not ready 1 = Ready
														x		Active	0 = Not active 1 = Active
													x			Motoring	0 = Not motoring 1 = Motoring
												x				Regenerating	0 = Not regenerating 1 = Regenerating
											x					In Precharge	0 = Not in precharge 1 = In precharge
										x						Droop Active	0 = Not droop active for AFE paralleling 1 = Droop active for AFE paralleling
									x							Alarm	0 = No alarm 1 = Alarm
								x								Faulted	0 = Not faulted 1 = Faulted
							x									At Reference	0 = Not at reference 1 = At reference
						x										Mot CurLim	0 = Not exceeding current limit in Motoring Mode 1 = Exceeding current limit in Motoring Mode
					x											Regen CurLim	0 = Not exceeding current limit in Regenerative Mode 1 = Exceeding current limit in Regenerative Mode
				x												Cmd Delayed	0 = Condition false 1 = Condition true
			x													DCVoltRefID0	
		x														DCVoltRefID1	
	x															DCVoltRefID2	
x																Reserved	

Bits			Description
14	13	12	
0	0	0	= DC Volt Ref
0	0	1	= Analog In 1
0	1	0	= Analog In 2
0	1	1	= DPI Port 1
1	0	0	= DPI Port 2
1	0	1	= DPI Port 3
1	1	0	= DPI Port 4
1	1	1	= DPI Port 5

The AFE reference is the commanded bus voltage (for example, a value of 6000 represents 600.0V DC). The feedback value is the bus voltage measured in the AFE.

The AFE supports 16-bit and 32-bit datalinks, which can be selected on the Logix module definition screen (for details, see the communication adapter documentation). The example screen shows a 20-COMM-E EtherNet/IP adapter that uses a 32-bit parameter (Datalink A) on the input, and two 16-bit parameters on the output.

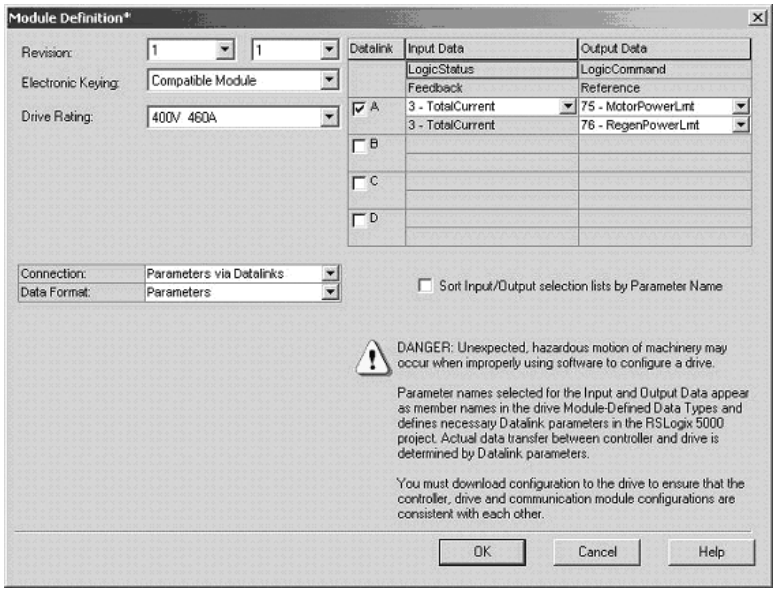

The data is used as shown in the table.

Logix to 20-COMM-*x*

Word	Output I/O
1	Logic Command
2	Reference (bus voltage)
3	Datalink In A1
4	Datalink In A2
5	Datalink In B1
6	Datalink In B2
7	Datalink In C1
8	Datalink In C2
9	Datalink In D1
10	Datalink In D2

20-COMM-*x* to Logix

Word	Input I/O
1	Logic Status
2	Feedback (bus voltage)
3	Datalink Out A1
4	Datalink Out A2
5	Datalink Out B1
6	Datalink Out B2
7	Datalink Out C1
8	Datalink Out C2
9	Datalink Out D1
10	Datalink Out D2

Logic Command Word for PowerFlex 750-Series Drives

Logic Bits																																
31	30	29	28	27	26	25	24	23	22	21	20	19	18	17	16	15	14	13	12	11	10	9	8	7	6	5	4	3	2	1	0	Command	Description
																															x	Normal Stop	0 = Not normal stop 1 = Normal stop
																														x		Start (1)	0 = Not start 1 = Start
																													x			Jog 1 (2)	0 = Not jog 1 (Par. 556) 1 = Jog 1
																												x				Clear Fault (3)	0 = Not clear fault 1 = Clear fault
																										x	x					Unipolar Direction	00 = No command 01 = Forward command 10 = Reverse command 11 = Hold direction control
																									x							Manual	0 = Not manual 1 = Manual
																								x								Reserved	
																						x	x									Accel Time	00 = No command 01 = Use Accel Time 1 (Par. 535) 10 = Use Accel Time 2 (Par. 536) 11 = Use present time
																				x	x											Decel Time	00 = No command 01 = Use Decel Time 1 (Par. 537) 10 = Use Decel Time 2 (Par. 538) 11 = Use present time
																			x													Ref Select 1	000 = No command
																		x														Ref Select 2	001 = Ref A Select (Par. 545)
																	x															Ref Select 3	010 = Ref B Select (Par. 550) 011 = Preset 3 (Par. 573) 100 = Preset 4 (Par. 574) 101 = Preset 5 (Par. 575) 110 = Preset 6 (Par. 576) 111 = Preset 7 (Par. 577)
																x																Reserved	
															x																	Coast Stop	0 = Not coast to stop 1 = Coast to stop
														x																		Current Limit Stop	0 = Not current limit stop 1 = Current limit stop
													x																			Run (4)	0 = Not run 1 = Run
												x																				Jog 2 (2)	0 = Not Jog 2 (Par. 557) 1 = Jog 2
											x																					Reserved	
										x																					Reserved	
									x																							Reserved	
								x																								Reserved	
							x																									Reserved	
						x																										Reserved	
					x																											Reserved	
				x																												Reserved	
			x																													Reserved	
		x																														Reserved	
	x																															Reserved	
x																																Reserved	

(1) A Not Stop condition (logic bit 0 = 0) must first be present before a 1 = Start condition starts the drive.
(2) A Not Stop condition (logic bit 0 = 0) must first be present before a 1 = Jog 1/Jog 2 condition jogs the drive. A transition to a '0' stops the drive.
(3) To perform this command, the value must switch from '0' to '1'.
(4) A Not Stop condition (logic bit 0 = 0) must first be present before a 1 = Run condition runs the drive. A transition to a '0' stops the drive.

Logic Status Word for PowerFlex 750-Series Drives

Logic Bits																																	
31	30	29	28	27	26	25	24	23	22	21	20	19	18	17	16	15	14	13	12	11	10	9	8	7	6	5	4	3	2	1	0	Command	Description
																															x	Run Ready	0 = Not ready to run 1 = Ready to run
																														x		Active	0 = Not active 1 = Active
																													x			Command Direction	0 = Reverse 1 = Forward
																												x				Actual Direction	0 = Reverse 1 = Forward
																											x					Accelerating	0 = Not accelerating 1 = Accelerating
																										x						Decelerating	0 = Not decelerating 1 = Decelerating
																									x							Alarm	0 = No alarm (Par. 959 and 960) 1 = Alarm
																								x								Fault	0 = No fault (Par. 952 and 953) 1 = Fault
																							x									At Setpt Spd	0 = Not at setpoint speed 1 = At setpoint speed
																						x										Manual	0 = Manual mode not active 1 = Manual mode active
																					x											Spd Ref ID 0	00000 = Reserved
																				x												Spd Ref ID 1	00001 = Auto Ref A (Par. 545)
																			x													Spd Ref ID 2	00010 = Auto Ref B (Par. 550)
																		x														Spd Ref ID 3	00011 = Auto Preset Speed 3 (Par. 573)
																	x															Spd Ref ID 4	00100 = Auto Preset Speed 4 (Par. 574) 00101 = Auto Preset Speed 5 (Par. 575) 00110 = Auto Preset Speed 6 (Par. 576) 00111 = Auto Preset Speed 7 (Par. 577) 01000 = Reserved 01001 = Reserved 01010 = Reserved 01011 = Reserved 01100 = Reserved 01101 = Reserved 01110 = Reserved 01111 = Reserved 10000 = Man Port 0 10001 = Man Port 1 10010 = Man Port 2 10011 = Man Port 3 10100 = Man Port 4 10101 = Man Port 5 10110 = Man Port 6 10111 = Reserved 11000 = Reserved 11001 = Reserved 11010 = Reserved 11011 = Reserved 11100 = Reserved 11101 = Man Port 13 (embedded EtherNet/IP) 11110 = Man Port 14 (DriveLogix™) 11111 = Alternate Man Ref Sel
																x																Reserved	
															x																	Running	0 = Not running 1 = Running
														x																		Jogging	0 = Not jogging (Par. 556 and 557) 1 = Jogging
													x																			Stopping	0 = Not stopping 1 = Stopping
												x																				DC Brake	0 = Not DC brake 1 = DC Brake
											x																					DB Active	0 = Not dynamic brake active 1 = Dynamic brake active
										x																						Speed Mode	0 = Not Speed Mode (Par. 309) 1 = Speed Mode
									x																							Position Mode	0 = Not Position Mode (Par. 309) 1 = Position Mode
								x																								Torque Mode	0 = Not Torque Mode (Par. 309) 1 = Torque Mode
							x																									At Zero Speed	0 = Not at zero speed 1 =At zero speed
						x																										At Home	0 = Not at home 1 = At home
					x																											At Limit	0 = Not at limit 1 = At limit
				x																												Current Limit	0 = Not at current limit 1 = At current limit
			x																													Bus Freq Reg	0 = Not Bus Freq Reg 1 = Bus Freq Reg

Logic Bits																															
31	**30**	**29**	**28**	**27**	**26**	**25**	**24**	**23**	**22**	**21**	**20**	**19**	**18**	**17**	**16**	**15**	**14**	**13**	**12**	**11**	**10**	**9**	**8**	**7**	**6**	**5**	**4**	**3**	**2**	**1**	**0**	**Command**	**Description**
		x																														Enable On	0 = Not enable on 1 = Enable on
	x																															Motor Overload	0 = Not motor overload 1 = Motor overload
x																																Regen	0 = Not regen 1= Regen

Notes:

HIM Overview

Topic	Page
External and Internal Connections	159
LCD Display Elements	160
ALT Functions	160
Menu Structure	161
View and Edit Parameters	163
Remove/Install the HIM	163

External and Internal Connections

The PowerFlex® Active Front End provides a number of cable connection points.

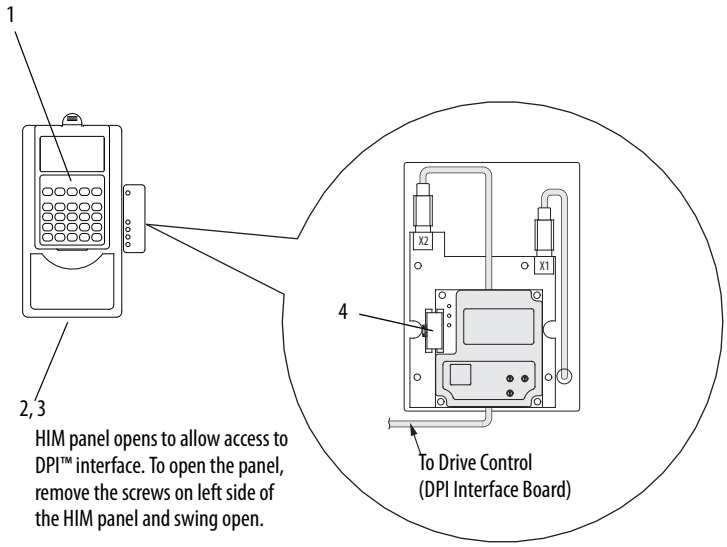

No.	Connector (1)	Description
1	DPI port 1	HIM connection when installed in AFE.
2	DPI port 2	Cable connection for handheld and remote options.
3	DPI port 3 or 2	Splitter cable that is connected to DPI Port 2, which provides an additional port.
4	DPI port 5	Cable connection for communications adapter.

(1) There is no port 4 on PowerFlex 7-Class products. Port 4 only exists on legacy SCANport™ products.

LCD Display Elements

Display	Description
F-> Power Loss Auto	Direction | Drive Status | Alarm | Auto/Man | Information
0.0 Volt	Commanded or Output Volts
Main Menu: Diagnostics Parameter Device Select	Programming / Monitoring / Troubleshooting

ALT Functions

To use an ALT function, press the ALT key and release it, and then press the programming key that is associated with the desired function that is listed in the following table.

Table 25 - ALT Key Functions

ALT Key plus…			Function
ALT	Sel	View	Selects how parameters are viewed or shows detailed information about a parameter or component.
	▲	Lang	Displays the language selection screen.
	▼	Auto/Man	Switches between Auto and Manual Modes.
	↵	Remove	Lets the HIM be removed without causing a fault if the HIM is not the last controlling device and does not have manual control of the AFE.
	.	Exp	Lets the value to be entered as an exponent.
	+/–	Param #	Enters a parameter number for viewing or editing.

Menu Structure

Figure 55 - HIM Menu Structure

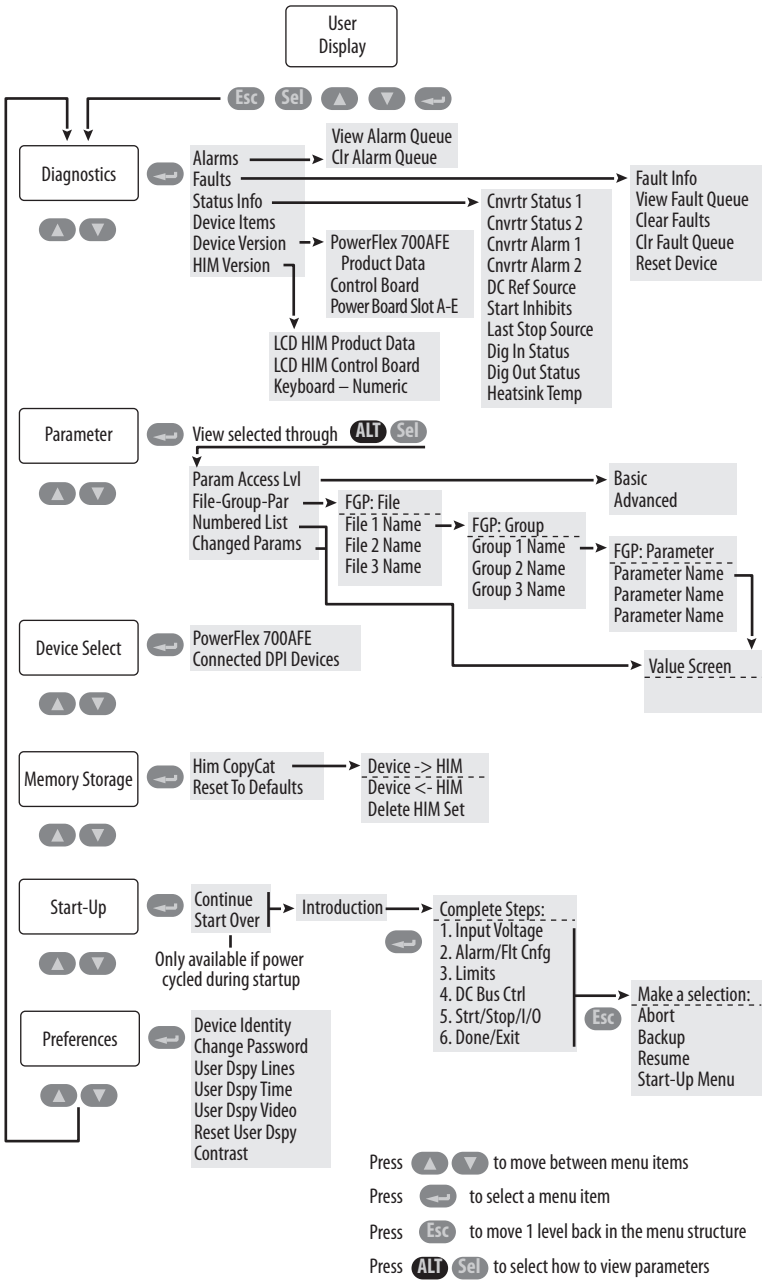

Diagnostics Menu

When a fault trips the Active Front End, use this menu to access detailed data about the AFE.

Option	Description
Faults	View fault queue or fault information, clear faults, or reset the AFE.
Status Info	View parameters that display status information about the AFE.
Device Version	View the firmware revision and hardware series of components.
HIM Version	View the firmware revision and hardware series of the HIM.

Parameter Menu

See View and Edit Parameters on page 163.

Device Select Menu

Use this menu to access parameters in connected peripheral devices.

Memory Storage Menu

AFE data can be saved to, or recalled from, HIM sets. HIM sets are files that are stored in permanent nonvolatile HIM memory.

Option	Description
HIM Copycat: Device -> HIM Device <- HIM	Save data to a HIM set, load data from a HIM set to active AFE memory, or delete a HIM set.
Reset To Defaults	Restore the AFE to its default configuration settings.

Start-up Menu

See Chapter 3.

Preferences Menu

The HIM and AFE have features that you can customize.

Option	Description
AFE Identity	Add text to identify the AFE.
Change Password	Enable/disable or modify the password.
User Dspy Lines	Select the display, parameter, scale, and text for the user display. The user display is two lines of user-defined data that appears when the HIM is not being used for programming.
User Dspy Time	Set the wait time for the user display or enable/disable it.
User Dspy Video	Select reverse or normal video for the frequency and user display lines.
Reset User Dspy	Return all options for the user display to default configuration values.

The AFE is initially set to Basic Parameter View. To view all parameters, set parameter 196 [ParamAccessLvl] to option '1' (Advanced). The Reset to Defaults function does not affect Parameter 196.

View and Edit Parameters

HIM

Step	Example Screen
1. In the Main Menu, press the ▲ or ▼ key to scroll to Parameter.	Main Menu: Diagnostics Parameter Device Select
2. Press the ↵ (Enter) key. FGP File appears on the top line and the first three files appear below it. 3. To scroll through the files, press the ▲ or ▼ key.	FGP: File Monitor Dynamic Control Utility
4. To select a file, press the ↵ (Enter) key. The groups in the file are displayed under it. 5. Repeat step 3 and step 4 to select a group and then a parameter. The parameter value screen appears.	FGG: Group Control Modes Voltage Loop Limits FGPP: Parameter DC Volt Ref Sel DC Volt Ref
6. To edit the parameter, press the ↵ (Enter) key. 7. To change the value, press the ▲ or ▼ key. If desired, press the Sel key to move from digit to digit, letter to letter, or bit to bit. The digit or bit that can be changed is highlighted. 8. To save the value, press the ↵ (Enter) key. To cancel a change, press the Esc key to escape. 9. To scroll through the parameters in the group, press the ▲ or ▼ key, or press the Esc key to return to the group list.	FGP: Par 61 DC Volt Ref 712.8 VDC 583 < > 842 FGP: Par 61 DC Volt Ref 700.0 VDC 583 < > 842

Numeric Keypad Shortcut

When using a HIM with a numeric keypad, press the ALT key and +/– key to access the parameter by typing its number.

Remove/Install the HIM

The HIM can be removed or installed while the AFE is powered.

Step	Example Displays
To remove the HIM, do the following. 1. Press the ALT key and then the ↵ (Enter) key. The Remove HIM configuration screen appears. 2. To confirm that you want to remove the HIM, press the ↵ (Enter) key. 3. Remove the HIM from the AFE. To install the HIM, insert it into the AFE or connect its cable to the AFE.	- Remove HIM - Do you wish to continue? Press Enter

Notes:

Application Notes

Topic	Page
Sizing Guidelines	165
Voltage Boost	167
Paralleling AFEs	168

Sizing Guidelines

Use the following guidelines to size the AFE.

Basic Procedure to Size the AFE

1. Sum the DC Input current rating of the connected drives.

   See the respective drive documentation specifications, or Drives in Common Bus Configurations, publication DRIVES-AT002.

2. Multiply the total DC current by 0.9.

   This step compensates for the boosted DC bus voltage that is provided by the AFE.

3. Select the AFE with the DC current rating that meets or exceeds the value calculated in step 2.

Examples:

Normal-duty (ND), 110%, 1 minute

DC Input Rating of Connected Drives				AFE	
DC Voltage	ND Power	ND Currents	ND Current Sum x 0.9	ND Cont. DC Output Amps	AC Input Voltage
650V	5 x 60 Hp 1 x 30 Hp	5 x 84.5 = 422.5 A 1 x 85.8 A	457.5 A	520 A	480V

Heavy-duty (HD), 150%, 1 minute

DC Input Rating of Connected Drives				AFE	
DC Voltage	HD Power	HD Currents	HD Current Sum x 0.9	HD Cont. DC Output Amps	AC Input Voltage
650V	5 x 60 Hp 1 x 30 Hp	5 x 84.5 = 422.5 A 1 x 55.7 = 55.7 A	430.4 A	435 A	480V

Advanced Procedure to Size the AFE

1. Convert all motor powers to kW (kW = Hp x 0.746).
2. Determine the total power and input current required during acceleration.(1)

   For Motoring Loads: $P_{Drive} = P_{Motor}$ / Motor Efficiency

   For Regenerating Loads: $P_{Drive} = P_{Motor}$ * Motor Efficiency

   $$P_{Accel} = P_{Drive1} + P_{Drive2} + \ldots$$

   Calculate the input current required on the regenerative unit during acceleration, taking advantage of the 110% for 1 minute overload rating of the regenerative unit.

   $$I_{Input} = P_{Accel} \times 1000 / (\sqrt{3} \times V_{LL} \times 1.1),$$

   where P_{Accel} is in kW, and V_{LL} = RMS line-to-line AC input voltage.
3. Determine the total power and input current required during steady-state run operation.(1)

   For Motoring Loads: $P_{Drive} = P_{Motor}$ / Motor Efficiency

   For Regenerating Loads: $P_{Drive} = P_{Motor}$ * Motor Efficiency

   $$P_{Run} = P_{Drive1} + P_{Drive2} + \ldots$$

   Calculate the steady-state input current required on the regenerative unit.

   $$I_{Input} = P_{Run} \times 1000 / (\sqrt{3} \times V_{LL}),$$

   where P_{Run} is in kW, and V_{LL} = RMS line-to-line AC input voltage.
4. Determine the total power and input current required during deceleration.(1)

   For Motoring Loads: $P_{Drive} = P_{Motor}$ / Motor Efficiency

   For Regenerating Loads: $P_{Drive} = P_{Motor}$ * Motor Efficiency

   $$P_{Decel} = P_{Drive1} + P_{Drive2} + \ldots$$

   Calculate the input current required on the regenerative unit during deceleration, taking advantage of the 110% for 1 minute overload rating of the regenerative unit.

   $$I_{Input} = P_{Decel} \times 1000 / (\sqrt{3} \times V_{LL} \times 1.1),$$

   where P_{Decel} is in kW, and V_{LL} = RMS line-to-line AC input voltage.
5. Compare the absolute values of the input current required for the regenerative unit during acceleration, deceleration, and steady state.
6. Select the regenerative unit with the input current rating that meets or exceeds the worst case input current.

(1) P_{Motor} is the motor power required for the application. The P_{Motor} could be positive if that section of the machine is motoring, or negative if that section of the machine is regenerating.

Voltage Boost

ATTENTION: The AFE can be used for voltage boost but cannot be used to lower the DC bus voltage. The minimum DC bus voltage is limited by the rectified diode bridge voltage.

AFE parameter 61 [DC Volt Ref] can be adjusted to boost the DC voltage.

The maximum value of parameter 61 [DC Volt Ref] is:

[Rated Volts] x 1.35 x 1.3 for 400/480V units

[Rated Volts] x 1.35 x 1.15 for 600/690V units,

where [Rated Volts] is the AC input voltage for the AFE.

The maximum AC output to the motor = [DC Volt Ref] / (√ 2 x 1.1)

Example:

AC line voltage = 400V AC

Motor = 460V AC

Max [DC Volt Ref] = 400 x 1.35 x 1.3 = 702V DC

Maximum AC output to motor = 702V DC / (√ 2 x 1.1) = 451V AC

In addition, the AC input current required by the AFE increases when using voltage boost. The continuous and overload AC input current ratings must not be exceeded, or the AFE trips on overload. See the Advanced Procedure to Size the AFE on page 166 for sizing guidelines.

Paralleling AFEs

The power of the AFE input group can be increased by connecting several groups in parallel. Paralleling refers to AFE units connected on the same input transformer and the same DC bus. No communication between the units is required—they work independently.

Paralleling is typically used when the power range of one frame size is not enough, or when redundancy is needed. For additional information, see Drives in Common Bus Configurations, publication DRIVES-AT002.

Guidelines for AFEs in IP20 2500 MCC Style Enclosure

Follow these guidelines for paralleling AFEs in IP20 2500 MCC Style enclosures:

- For AFEs in IP20 2500 MCC Style enclosures, a maximum of two AFEs of the same power size (for example, two Frame 10 AFEs) and same voltage class can be paralleled.
- Each AFE must have its own LCL filter.
- Each AFE must have its own short circuit protection on AC and DC sides. See Appendix A for fusing information. When paralleling, you must check the sufficient short circuit capacity of the system.
- Derate the AFE units by 5% of their power rating.
- Configure the following parameters for parallel operation:
  - Set Parameter 42 - [Modulation Type] to '3'.
  - Set Parameter 82 - [Ground I Lvl] to 100%.
  - Set Parameter 85 - [Droop] to 5% for current sharing of the AFEs.
  - Set Parameter 86 - [PWM Synch] to '1' to reduce circulating currents between AFEs connected to the same DC bus and fed from the same power source.
- If one of the paralleled AFEs is isolated from the AC and DC voltages, you must isolate the AC input and DC output. The AC input can be isolated with a circuit breaker or a disconnect switch. Contactors are not suitable for isolating the AC input because they cannot be locked in the safe position. The DC output can be isolated with a disconnect. A load isolation switch or safety isolation switch can be used to isolate the precharging circuit from the AC input.
- Each AFE must use a separate precharging circuit, precharging control switch, DC bus output fusing, and main contactor.

  Each AFE controls its own precharging and main contactor. Therefore, it is possible to disconnect the AFE when other parallel AFEs are powered up but not modulating.

- The fault relay of both AFEs must be interlocked with each other, such that both AFEs are disabled (not running) when either AFE is faulted.

- An AFE can be connected while other parallel AFE units are running. When connecting the AFE to the DC bus, follow these steps in the order shown.

  a. Precharged the isolated AFE.

     When completed, the AFE control closes the contactor.

  b. To connect the AFE to the DC bus, close the DC disconnect.

  When disconnecting the AFE from the DC bus, follow these steps in the order shown.

  a. Stop the inverters and AFEs connected to the same DC bus from modulating.

     The AFE load must be zero before being disconnected to reduce the load on the contactor.

  b. Open the contactor of the AFE.

  c. Open the DC disconnect switch.

  d. Restart the other AFE units.

- When AFEs are paralleled, the DC bus voltage at regeneration is 5% higher than with one AFE due to the 5% droop. See Drives in Common Bus Configurations, publication DRIVES-AT002, for supported drives that can be used in various AFE configurations.

- Figure 56 on page 170 shows an example of paralleling two AFEs in their IP20 2500 MCC Style enclosures, where each AFE has its own precharging circuit, precharging control, and fusing on the DC bus output and main contactor.

  In this case, turn the disconnects (Q0) of all AFEs to ON, and set all REM-AUTO-MAN selector switches on the door to AUTO to enable automatic operation.

  When turning on the main power, the two AFEs precharge automatically. After charging, the contactors (K1) are closed and the AFEs start the modulation. The control signal 'Inverter Enable' shown in Figure 23 on page 45 can be used to interlock the drives connected to the DC bus.

Figure 56 - Connecting Parallel Frame 10 AFEs in IP20 2500 MCC Style Enclosures

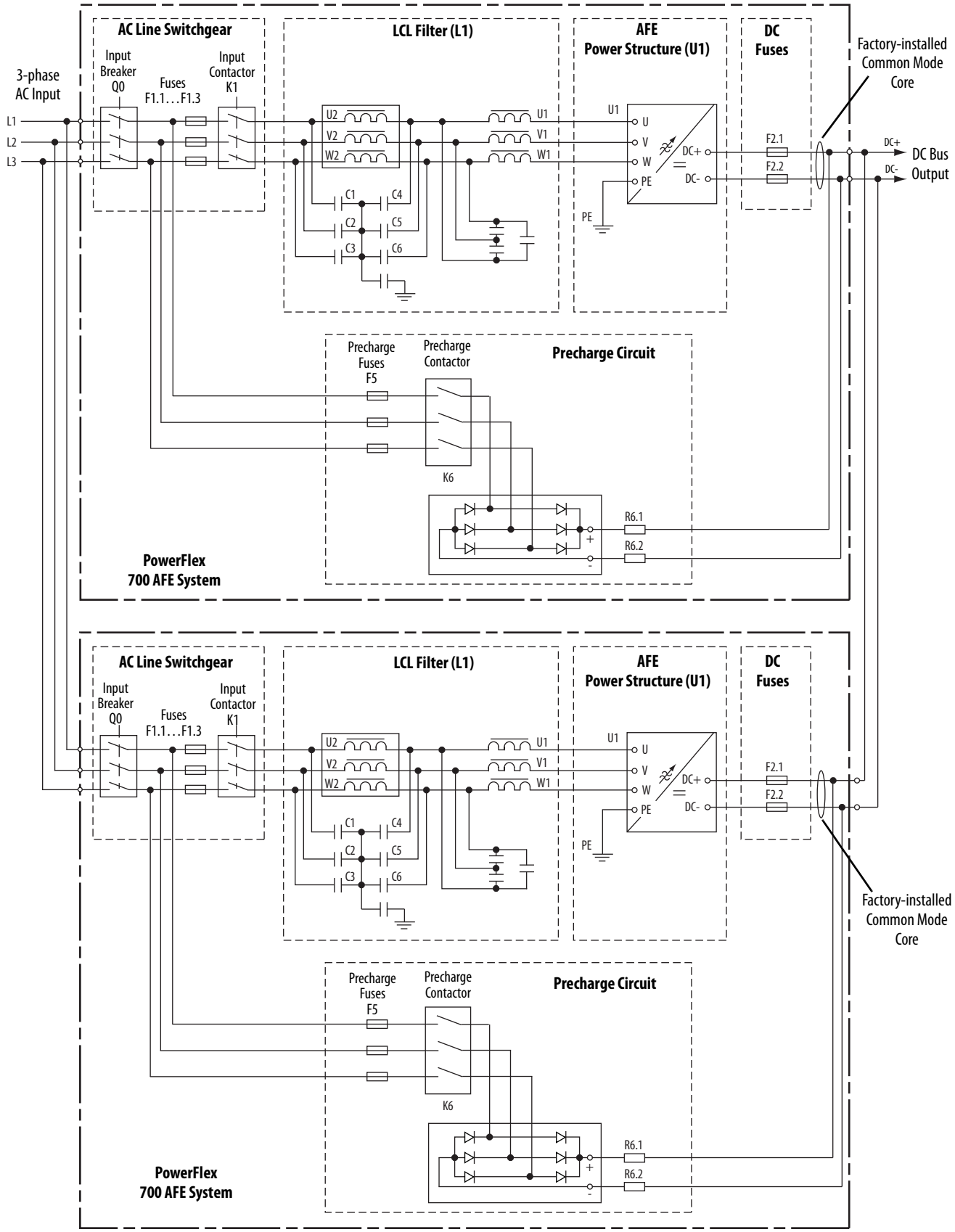

Figure 57 - Connecting Parallel Frame 13 AFEs in IP20 2500 MCC Style Enclosures

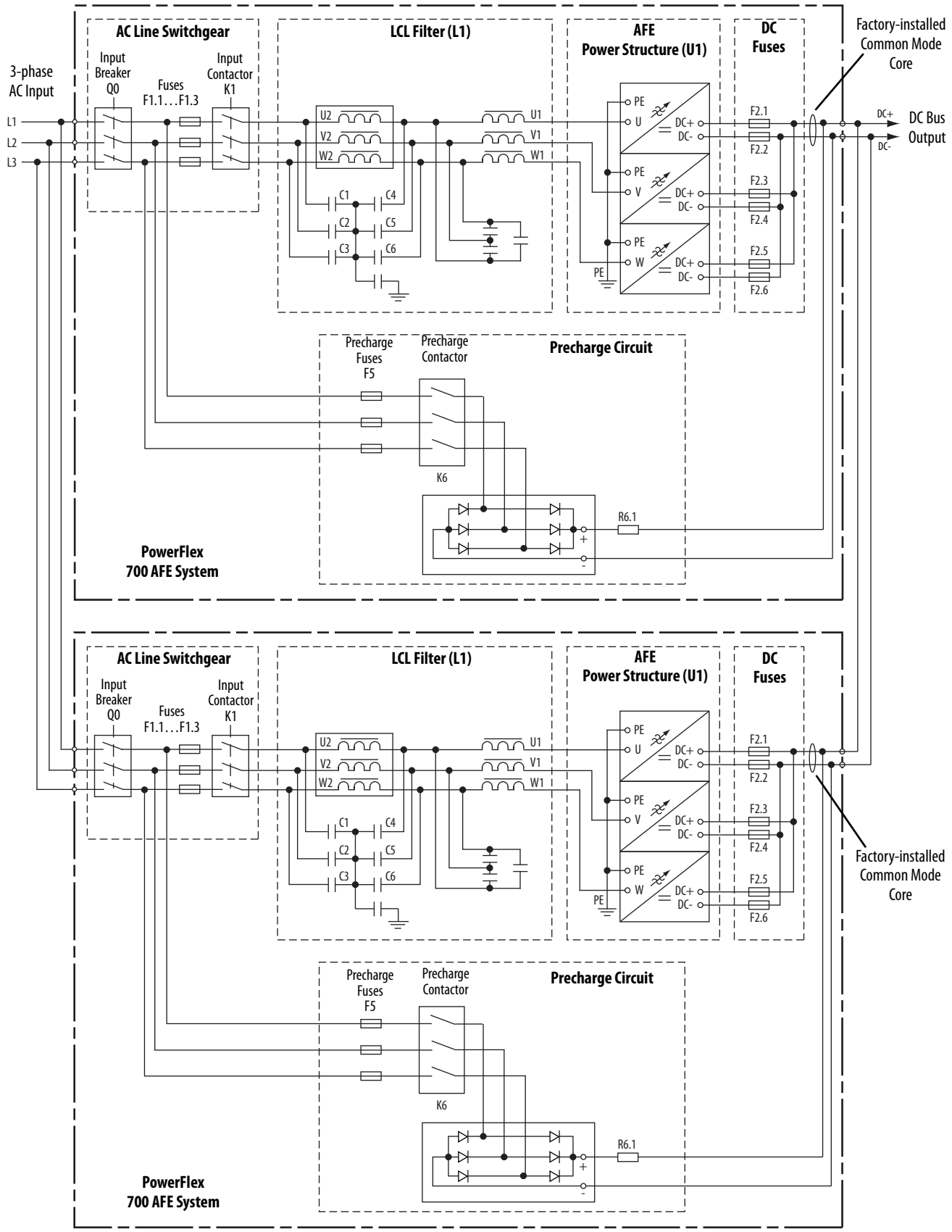

Guidelines for AFEs in IP21 Rittal Enclosure

Follow these guidelines for paralleling AFEs in IP21 Rittal enclosures:

- AFE units of different power sizes can be connected in parallel.
- For AFEs in IP21 Rittal enclosures, a maximum of six AFEs can be paralleled. However, the capacity of the DC bus bar can limit the number of AFEs.
- Each AFE must have its own LCL filter.
- Each AFE must have its own short circuit protection on AC and DC sides. See Appendix A for fusing information. When paralleling, you must check the sufficient short circuit capacity of the system.
- Derate the AFE units by 5% of their power rating.
- Configure the following parameters for parallel operation:
  - Set Parameter 42 - [Modulation Type] to '3'.
  - Set Parameter 82 - [Ground I Lvl] to 100%.
  - Set Parameter 85 - [Droop] to 5% for current sharing of the AFEs.
  - Set Parameter 86 - [PWM Synch] to '1' to reduce circulating currents between AFEs connected to the same DC bus and fed from the same power source.
- If one of the paralleled AFEs is isolated from the AC and DC voltages, you must isolate the AC input and DC output. The AC input can be isolated with a circuit breaker or a disconnect switch. Contactors are not suitable for isolating the AC input because they cannot be locked in the safe position. The DC output can be isolated with a disconnect. A load isolation switch or safety isolation switch can be used to isolate the precharging circuit from the AC input.
- Each AFE must use a separate precharging circuit, precharging control switch, DC bus output fusing, and main contactor.

  Each AFE controls its own precharging and main contactor. Therefore, it is possible to disconnect the AFE when other parallel AFEs are powered up but not modulating.
- The fault relay of both AFEs must be interlocked with each other, such that both AFEs are disabled (not running) when either AFE is faulted.
- An AFE can be connected while other parallel AFE units are running. When connecting the AFE to the DC bus, follow these steps in the order shown.

  a. Precharged the isolated AFE.

When completed, the AFE control closes the MCCB.

b. To connect the AFE to the DC bus, close the DC disconnect.

When disconnecting the AFE from the DC bus, follow these steps in the order shown.

a. Stop the inverters and AFEs connected to the same DC bus from modulating.

   The AFE load must be zero before being disconnected to reduce the load on the MCCB.

b. Open the MCCB of the AFE.

c. Open the DC disconnect switch.

d. Restart the other AFE units.

- When AFEs are paralleled, the DC bus voltage at regeneration is 5% higher than with one AFE due to the 5% droop. See Drives in Common Bus Configurations, publication DRIVES-AT002, for supported drives that can be used in the various AFE configurations.

- Figure 58 on page 174 shows an example of paralleling two AFEs in their IP21 Rittal enclosures, where each AFE has its own precharging circuit, precharging control, and fusing on the DC bus output and input contactor.

  In this case, turn the disconnects (Q0) of all AFEs to ON, and set all MCCB CONTROL selector switches on the door to AUTO to enable automatic operation.

  When turning on the main power, the two AFEs precharge automatically. After charging, the MCCB motor-controlled circuit breakers (Q1) are closed and the AFEs start the modulation. The control signal 'Inverter Enable' shown in Figure 40 on page 79 can be used to interlock the drives connected to the DC bus.

Figure 58 - Connecting Parallel Frame 10 AFEs in IP21 Rittal Enclosure

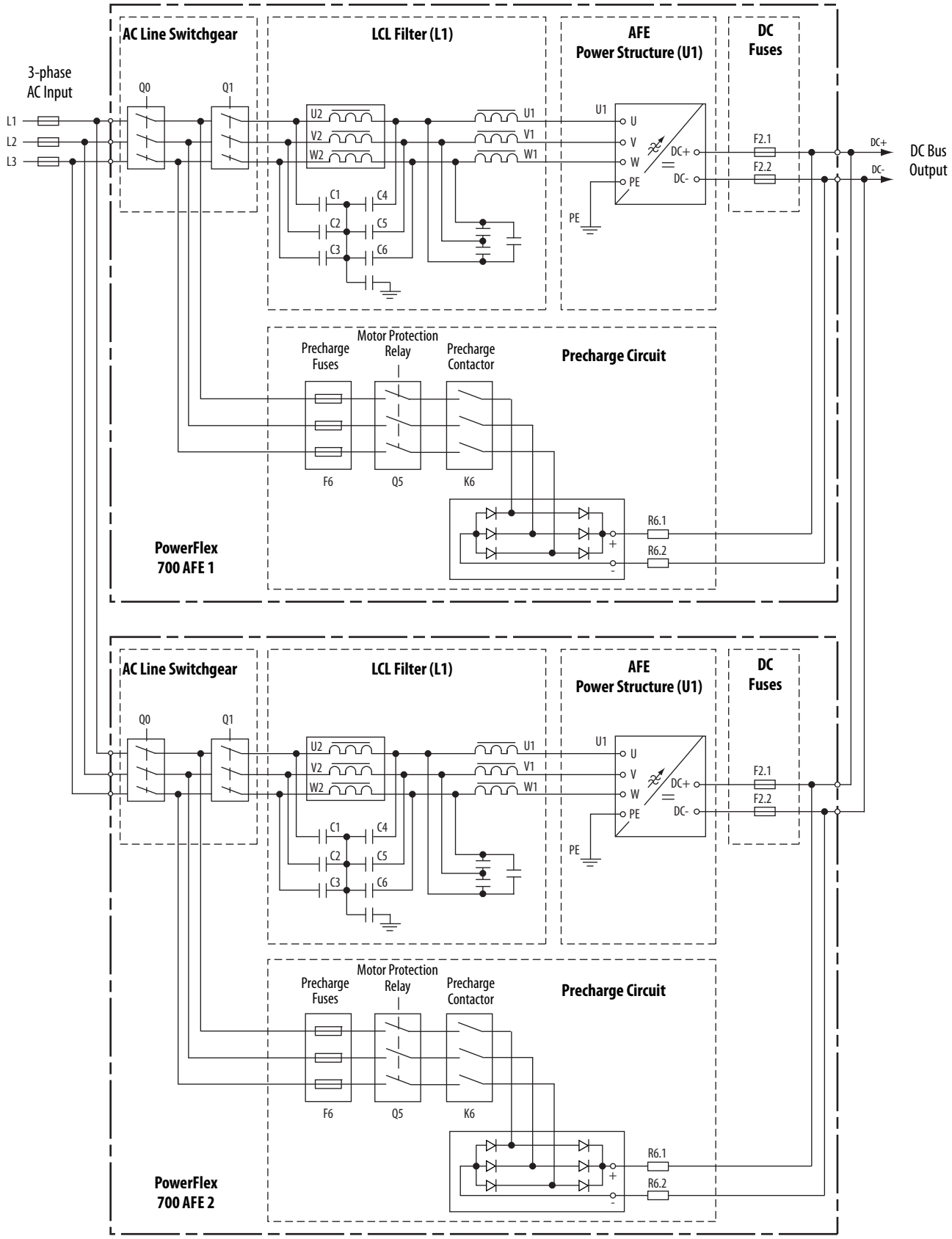

Figure 59 - Connecting Parallel Frame 13 AFEs in IP21 Rittal Enclosure

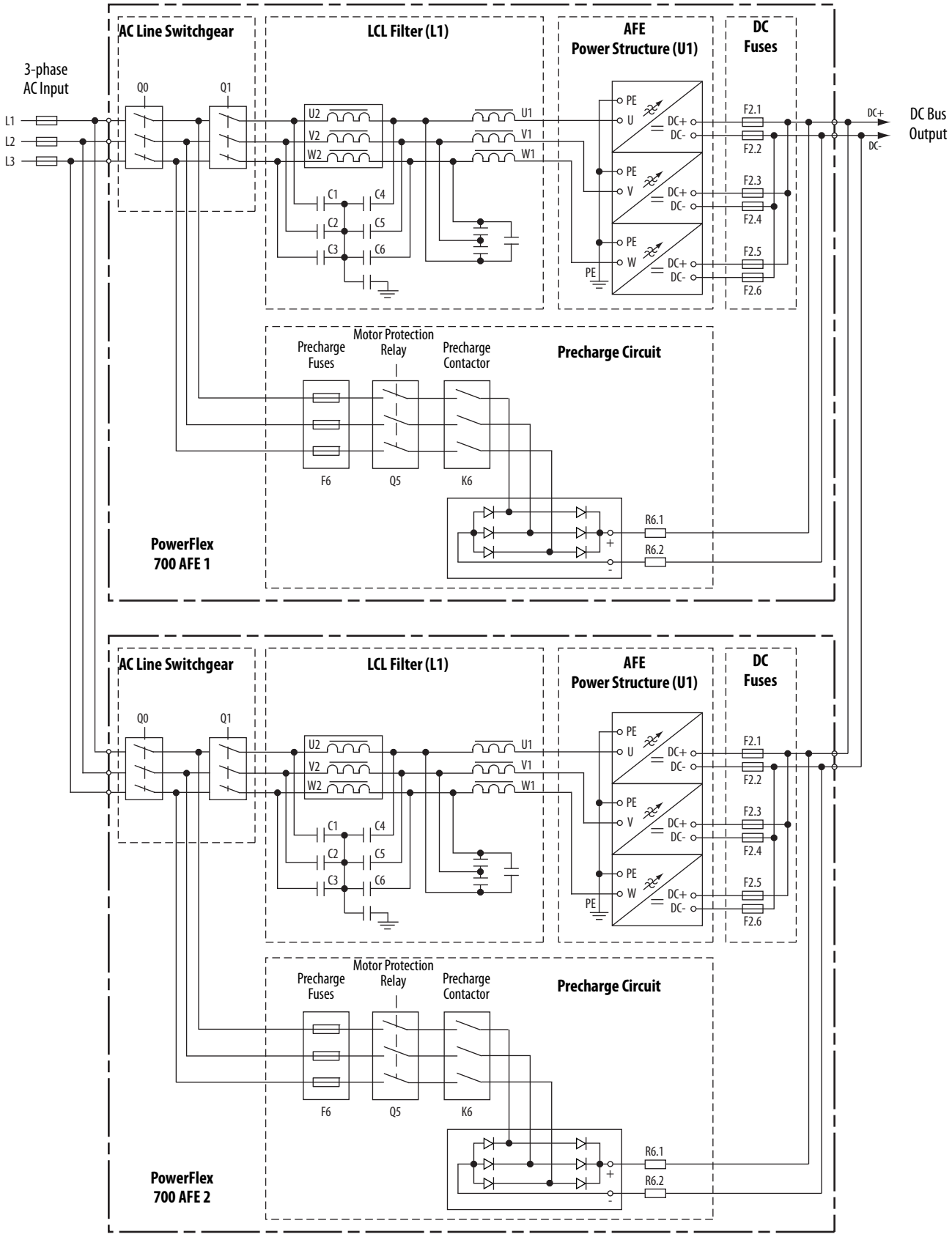

Paralleling an AFE with One or More PowerFlex SCR Bus Supplies

For information about paralleling an AFE with one or more PowerFlex® SCR Bus Supplies, see Drives in Common Bus Configurations, publication DRIVES-AT002.

A

AC Line Freq parameter 99
AC Line kVA parameter 99
AC Line kVar parameter 99
AC Line kW parameter 99
AC supply source
- unbalanced 26, 58
- ungrounded 26, 58

Active Current parameter 99
Active I Ki parameter 103
Active I Kp parameter 103
Active I Ref parameter 103
AFE
- dimensions 143
- fault descriptions 127
- Frame 10 main component locations
  - in IP20 2500 MCC Style enclosure 22
  - in IP21 Rittal enclosure 54
- Frame 13 main component locations
  - in IP20 2500 MCC Style enclosure 23
  - in IP21 Rittal enclosure 55
- main component sections
  - in IP20 2500 MCC Style enclosure 20
  - in IP21 Rittal enclosure 52
- parameters 95

Alarm 1 @ Fault parameter 108
Alarm 1 Code parameter 110
Alarm 2 @ Fault parameter 108
Alarm 2 Code parameter 110
Alarm 3 Code parameter 110
Alarm 4 Code parameter 110
Alarm Clear parameter 110
alarm clearing 131
Alarm Config parameter 110
Alarms Parameter Group 110
Analog In 1 Hi parameter 113
Analog In 1 Lo parameter 113
Analog In 1 Loss parameter 113
Analog In 2 Hi parameter 113
Analog In 2 Lo parameter 113
Analog In 2 Loss parameter 113
Analog In1 Value parameter 100
Analog In2 Value parameter 100
Analog Inputs Parameter Group 113
Analog Out1 Hi parameter 114
Analog Out1 Lo parameter 114
Analog Out1 Sel parameter 114
Analog Out2 Hi parameter 114
Analog Out2 Lo parameter 114
Analog Out2 Sel parameter 114
Analog Outputs Parameter Group 113
Anlg In Config parameter 113
Anlg Out Absolute parameter 114
Anlg Out Config parameter 113
Anlg Out1 Scale parameter 115
Anlg Out1 Setpt parameter 115
Anlg Out2 Scale parameter 115
Anlg Out2 Setpt parameter 115
armored cable 30, 63
Auto Rstrt Delay parameter 102
Auto Rstrt Tries parameter 102
Auto Stop Level parameter 101
Auto-Reset/Start 126
AutoRstrt Config parameter 102

B

bus capacitors, discharging 12

C

cables, power
- armored 30, 63
- insulation 29, 62
- separation 29, 62
- shielded 29, 30, 62, 63
- unshielded 29, 30, 62

capacitors 37, 69
capacitors - bus, discharging 12
catalog number explanation 13
CE Conformity 49, 82
clearing
- alarms 131
- faults 127

Cmd DC Volt parameter 100
Cnvrtr Alarm 1 parameter 106
Cnvrtr Alarm 2 parameter 106
Cnvrtr Logic Rslt parameter 111
Cnvrtr OL Count parameter 108
Cnvrtr OL Factor parameter 109
Cnvrtr Status 1 parameter 105
Cnvrtr Status 2 parameter 106
Comm Control Parameter Group 111
Common Mode
- capacitors 37, 69
- interference 40, 75

Communication File 111
communications - programmable controller configurations 152
component locations
- Frame 10 AFE in IP20 2500 MCC Style enclosure 22
- Frame 10 AFE in IP21 Rittal enclosure 54
- Frame 13 AFE in IP20 2500 MCC Style enclosure 23
- Frame 13 AFE in IP21 Rittal enclosure 55

component sections
- AFE in IP20 2500 MCC Style enclosure 20
- AFE in IP21 Rittal enclosure 52

configuring parameters 95
Conformity - CE 49, 82
Contact Off Cnfg parameter 109
Contact On Delay parameter 101

control
I/O terminal block in IP20 2500 MCC Style enclosure 44
I/O terminal block in IP21 Rittal enclosure 78
wire 41, 75
Control Modes Parameter Group 101
Control Options parameter 102
Control SW Ver parameter 100
conventions used in this manual 10
Converter Data Parameter Group 100
Converter Memory Parameter Group 105
CopyCat HIM function 162
cross-reference of parameters
by name 117
by number 120
Current Lmt Val parameter 103
Current Loop Parameter Group 103

D

Data In A1 parameter 112
Data In A2 parameter 112
Data In B1 parameter 112
Data In B2 parameter 112
Data In C1 parameter 112
Data In C2 parameter 112
Data In D1 parameter 112
Data In D2 parameter 112
Data Out A1 parameter 112
Data Out A2 parameter 112
Data Out B1 parameter 112
Data Out B2 parameter 112
Data Out C1 parameter 112
Data Out C2 parameter 112
Data Out D1 parameter 112
Data Out D2 parameter 112
data, saving 162
Datalinks Parameter Group 112
DC Bus Current parameter 99
DC Bus Hi Alarm parameter 103
DC Bus Lo Alarm parameter 103
DC Bus Volt parameter 99
DC Ref Hi Lmt parameter 103
DC Ref Lo Lmt parameter 103
DC Ref Source parameter 106
DC Volt Ki parameter 102
DC Volt Kp parameter 102
DC Volt Ref parameter 102
DC Volt Ref Sel parameter 102
defaults, resetting to 162
diagnostic data, viewing 161
Diagnostics Parameter Group 105
Dig In Status parameter 107
Dig Out Setpt parameter 116
Dig Out Status parameter 107
Dig Out2 Invert parameter 116
Dig Out2 OffTime parameter 116
Dig Out2 OnTime parameter 116
Dig Out3 Invert parameter 116
Dig Out3 OffTime parameter 116
Dig Out3 OnTime parameter 116
Digital In1 Sel parameter 115
Digital In2 Sel parameter 115
Digital In3 Sel parameter 115
Digital In4 Sel parameter 115
Digital In5 Sel parameter 115
Digital In6 Sel parameter 115
Digital Inputs Parameter Group 115
Digital Out1 Sel parameter 116
Digital Out2 Sel parameter 116
Digital Out3 Sel parameter 116
Digital Outputs Parameter Group 116
discharging bus capacitors 12
distribution systems 37, 69
unbalanced 26, 58
ungrounded 26, 58
DPI Baud Rate parameter 111
DPI communication configurations 152
DPI Port Sel parameter 111
DPI Port Value parameter 111
Droop parameter 104
Dynamic Control File 101

E

editing parameters 95
Elapsed Run Time parameter 100
electrostatic discharge (ESD) 12
EMC Directive 49, 82

F

factory defaults, resetting to 162
fault
descriptions 127
queue 161
Fault 1 Code parameter 109
Fault 1 Time parameter 109
Fault 2 Code parameter 109
Fault 2 Time parameter 109
Fault 3 Code parameter 109
Fault 3 Time parameter 109
Fault 4 Code parameter 109
Fault 4 Time parameter 109
Fault Bus Volts parameter 107
Fault Clear Mode parameter 109
Fault Clear parameter 109
Fault Clr Mask parameter 111
Fault Clr Owner parameter 111
Fault Config parameter 109
Fault Frequency parameter 107
Fault Temp parameter 107

Fault Total Curr parameter 107
Faults Parameter Group 109
File
Communication 111
Dynamic Control 101
Inputs & Outputs 113
Monitor 99
Utility 105
File-Group-Parameter 96
fuse and circuit breaker ratings 141, 142

G

general precautions 12
Ground Current parameter 99
Ground I Lvl parameter 103
grounding
recommended scheme 27, 59
requirements 27, 59
shields 29, 61
Group - Parameter
Alarms 110
Analog Inputs 113
Analog Outputs 113
Comm Control 111
Control Modes 101
Converter Data 100
Converter Memory 105
Current Loop 103
Datalinks 112
Diagnostics 105
Digital Inputs 115
Digital Outputs 116
Faults 109
Limits 103
Masks & Owners 111
Metering 99
Parallel Mode 104
Restart Modes 102
Voltage Loop 102

H

hardware enable 46, 80
Heatsink Temp parameter 99
HIM 159
ALT functions 160
Diagnostics menu 161
external and internal connections 159
LCD display elements 160
Memory Storage menu 162
menu structure 161
Preferences menu 162
removing 163

I

I Imbalance parameter 99
Input Current R parameter 99
Input Current S parameter 99
Input Current T parameter 99
input potentiometer 47, 80
input power conditioning 27, 59
Input Voltage parameter 99
Inputs & Outputs File 113

L

Language parameter 105
Last Stop Source parameter 107
Limits Parameter Group 103
linear list of parameters 120
Logic Command Word
PowerFlex 700/700H/700S drives 152
PowerFlex 750-Series drives 155
Logic Mask parameter 111
Logic Status Word
PowerFlex 700/700H/700S drives 153
PowerFlex 750-Series drives 156
Low Voltage Directive 49, 82

M

main component locations
Frame 10 AFE in IP20 2500 MCC Style enclosure 22
Frame 10 AFE in IP21 Rittal enclosure 54
Frame 13 AFE in IP20 2500 MCC Style enclosure 23
Frame 13 AFE in IP21 Rittal enclosure 55
main component sections
AFE in IP20 2500 MCC Style enclosure 20
AFE in IP21 Rittal enclosure 52
manual conventions 10
Masks & Owners Parameter Group 111
Metering Parameter Group 99
mode capacitors 37, 69
Modulation Index parameter 101
Modulation Type parameter 101
Monitor File 99
Motor Power Lmt parameter 103
Motoring MWh parameter 100

N

Nom Input Volt parameter 101
non-resettable faults 126

O

operator interface 163

P

Parallel Mode Parameter Group 104
Param Access Lvl parameter 105
parameter
changing/editing 163
cross-reference
by name 117

by number 120
linear list 120
viewing 163

Parameters

AC Line Freq 99
AC Line kVA 99
AC Line kVar 99
AC Line kW 99
Active Current 99
Active I Ki 103
Active I Kp 103
Active I Ref 103
Alarm 1 @ Fault 108
Alarm 1 Code 110
Alarm 2 @ Fault 108
Alarm 2 Code 110
Alarm 3 Code 110
Alarm 4 Code 110
Alarm Clear 110
Alarm Config 110
Analog In 1 Hi 113
Analog In 1 Lo 113
Analog In 1 Loss 113
Analog In 2 Hi 113
Analog In 2 Lo 113
Analog In 2 Loss 113
Analog In1 Value 100
Analog In2 Value 100
Analog Out1 Hi 114
Analog Out1 Lo 114
Analog Out1 Sel 114
Analog Out2 Hi 114
Analog Out2 Lo 114
Analog Out2 Sel 114
Anlg In Config 113
Anlg Out Absolute 114
Anlg Out Config 113
Anlg Out1 Scale 115
Anlg Out1 Setpt 115
Anlg Out2 Scale 115
Anlg Out2 Setpt 115
Auto Rstrt Delay 102
Auto Rstrt Tries 102
Auto Stop Level 101
AutoRstrt Config 102
Cmd DC Volt 100
Cnvrtr Alarm 1 106
Cnvrtr Alarm 2 106
Cnvrtr Logic Rslt 111
Cnvrtr OL Count 108
Cnvrtr OL Factor 109
Cnvrtr Status 1 105
Cnvrtr Status 2 106
Contact Off Cnfg 109
Contact On Delay 101
Control Options 102
Control SW Ver 100
Current Lmt Val 103
Data In A1 112
Data In A2 112
Data In B1 112
Data In B2 112
Data In C1 112
Data In C2 112
Data In D1 112
Data In D2 112
Data Out A1 112
Data Out A2 112
Data Out B1 112
Data Out B2 112
Data Out C1 112
Data Out C2 112
Data Out D1 112
Data Out D2 112
DC Bus Current 99
DC Bus Hi Alarm 103
DC Bus Lo Alarm 103
DC Bus Volt 99
DC Ref Hi Lmt 103
DC Ref Lo Lmt 103
DC Ref Source 106
DC Volt Ki 102
DC Volt Kp 102
DC Volt Ref 102
DC Volt Ref Sel 102
Dig In Status 107
Dig Out Setpt 116
Dig Out Status 107
Dig Out2 Invert 116
Dig Out2 OffTime 116
Dig Out2 OnTime 116
Dig Out3 Invert 116
Dig Out3 OffTime 116
Dig Out3 OnTime 116
Digital In1 Sel 115
Digital In2 Sel 115
Digital In3 Sel 115
Digital In4 Sel 115
Digital In5 Sel 115
Digital In6 Sel 115
Digital Out1 Sel 116
Digital Out2 Sel 116
Digital Out3 Sel 116
DPI Baud Rate 111
DPI Port Sel 111
DPI Port Value 111
Droop 104
Elapsed Run Time 100
Fault 1 Code 109
Fault 1 Time 109
Fault 2 Code 109
Fault 2 Time 109
Fault 3 Code 109
Fault 3 Time 109
Fault 4 Code 109
Fault 4 Time 109
Fault Bus Volts 107
Fault Clear 109
Fault Clear Mode 109
Fault Clr Mask 111
Fault Clr Owner 111
Fault Config 109
Fault Frequency 107
Fault Temp 107
Fault Total Curr 107
Ground Current 99
Ground I Lvl 103
Heatsink Temp 99
I Imbalance 99
Input Current R 99
Input Current S 99
Input Current T 99
Input Voltage 99
Language 105
Last Stop Source 107

Logic Mask 111
Modulation Index 101
Modulation Type 101
Motor Power Lmt 103
Motoring MWh 100
Nom Input Volt 101
Param Access Lvl 105
Power Factor 99
Power Up Marker 109
PWM Frequency 101
PWM Synch 104
Rated Amps 100
Rated kW 100
Rated Volts 100
RatedLineCurrent 101
Reactive Current 99
Reactive I Ki 103
Reactive I Kp 103
Reactive I Ref 103
Reactive I Sel 103
Regen MWh 100
Regen Power Lmt 103
Reset Meters 105
Reset to Defaults 86, 90, 105
Restart Delay 101
Start Inhibits 107
Start Owner 111
Start Up Delay 104
Start/Stop Mode 101
Status 1 @ Fault 108
Status 2 @ Fault 108
Stop Delay 101
Stop Owner 111
Testpoint 1 Data 108
Testpoint 1 Sel 108
Testpoint 2 Data 108
Testpoint 2 Sel 108
Total Current 99
Voltage Class 105

PE 27, 59
potentiometer, wiring 47, 80
power
cables/wiring
AFE in IP20 2500 MCC Style enclosure 29
AFE in IP21 Rittal enclosure 62
terminal locations/specifications
Frame 10 in IP20 2500 MCC Style enclosure 34
Frame 10 in IP21 Rittal enclosure 66
Frame 13 in IP20 2500 MCC Style enclosure 35
Frame 13 in IP21 Rittal enclosure 67
power conditioning, input 27, 59
Power Factor parameter 99
Power Up Marker parameter 109
precautions, general 12
preferences, setting 162
programmable controller configurations 152
PWM Frequency parameter 101
PWM Synch parameter 104

R

Rated Amps parameter 100
Rated kW parameter 100
Rated Volts parameter 100
RatedLineCurrent parameter 101
Reactive Current parameter 99
Reactive I Ki parameter 103
Reactive I Kp parameter 103
Reactive I Ref parameter 103
Reactive I Sel parameter 103
Regen MWh parameter 100
Regen Power Lmt parameter 103
Reset Meters parameter 105
Reset to Defaults 162
Reset to Defaults parameter 86, 90, 105
Residual Current Detector (RCD) 26, 58
Restart Delay parameter 101
Restart Modes Parameter Group 102

S

saving data 162
setting preferences 162
shielded cables - power 30, 63
SHLD termination 29, 61
signal wire 41, 75
specifications 137
control 138
electrical 138
environment 138
protection 138
Start Inhibits parameter 107
Start Owner parameter 111
Start Up Delay parameter 104
Start/Stop Mode parameter 101
start-up 85
static discharge (ESD) 12
Status 1 @ Fault parameter 108
Status 2 @ Fault parameter 108
Stop Delay parameter 101
Stop Owner parameter 111
supplemental information 137
supply source - AC 26, 58

T

technical support 10, 135
terminal block
I/O in IP20 2500 MCC Style enclosure 44
I/O in IP21 Rittal enclosure 78
wire size 42, 76

terminals - power
Frame 10 in IP20 2500 MCC Style enclosure 34
Frame 10 in IP21 Rittal enclosure 66
Frame 13 in IP20 2500 MCC Style enclosure 35
Frame 13 in IP21 Rittal enclosure 67
Testpoint 1 Data parameter 108
Testpoint 1 Sel parameter 108
Testpoint 2 Data parameter 108
Testpoint 2 Sel parameter 108
Total Current parameter 99
troubleshooting 125

U

unbalanced/ungrounded AC supply source 26, 58
ungrounded distribution systems 37, 69
unshielded power cables 30, 62
user configurable alarms 126
Utility File 105

V

viewing and changing parameters 163
Voltage Class parameter 105
Voltage Loop Parameter Group 102

W

website
technical support 10
wire
control 41, 75
signal 41, 75
wiring
hardware enable 46, 80
potentiometer 47, 80
power for AFE in IP20 2500 MCC Style enclosure 29
power for AFE in IP21 Rittal enclosure 62

Notes:

Rockwell Automation Support

Use the following resources to access support information.

Technical Support Center	Knowledgebase Articles, How-to Videos, FAQs, Chat, User Forums, and Product Notification Updates.	https://rockwellautomation.custhelp.com/
Local Technical Support Phone Numbers	Locate the phone number for your country.	http://www.rockwellautomation.com/global/support/get-support-now.page
Direct Dial Codes	Find the Direct Dial Code for your product. Use the code to route your call directly to a technical support engineer.	http://www.rockwellautomation.com/global/support/direct-dial.page
Literature Library	Installation Instructions, Manuals, Brochures, and Technical Data.	http://www.rockwellautomation.com/global/literature-library/overview.page
Product Compatibility and Download Center (PCDC)	Get help determining how products interact, check features and capabilities, and find associated firmware.	http://www.rockwellautomation.com/global/support/pcdc.page

Documentation Feedback

Your comments will help us serve your documentation needs better. If you have any suggestions on how to improve this document, complete the How Are We Doing? form at http://literature.rockwellautomation.com/idc/groups/literature/documents/du/ra-du002_-en-e.pdf.

Rockwell Automation maintains current product environmental information on its website at http://www.rockwellautomation.com/rockwellautomation/about-us/sustainability-ethics/product-environmental-compliance.page.

Allen-Bradley, Connected Components Workbench, DPI, DriveExecutive, DriveExplorer, DriveLogix, PowerFlex, SCANport, Rockwell automation, and Rockwell Software are trademarks of Rockwell Automation, Inc.

Trademarks not belonging to Rockwell Automation are property of their respective companies.

Rockwell Otomasyon Ticaret A.Ş., Kar Plaza İş Merkezi E Blok Kat:6 34752 İçerenköy, İstanbul, Tel: +90 (216) 5698400

www.rockwellautomation.com

Power, Control and Information Solutions Headquarters

Americas: Rockwell Automation, 1201 South Second Street, Milwaukee, WI 53204-2496 USA, Tel: (1) 414.382.2000, Fax: (1) 414.382.4444
Europe/Middle East/Africa: Rockwell Automation NV, Pegasus Park, De Kleetlaan 12a, 1831 Diegem, Belgium, Tel: (32) 2 663 0600, Fax: (32) 2 663 0640
Asia Pacific: Rockwell Automation, Level 14, Core F, Cyberport 3, 100 Cyberport Road, Hong Kong, Tel: (852) 2887 4788, Fax: (852) 2508 1846

Publication 20Y-UM001F-EN-P - April 2017
Supersedes Publication 20Y-UM001E-EN-P - July 2014

Copyright © 2017 Rockwell Automation, Inc. All rights reserved. Printed in the U.S.A.