FLEX I/O Frequency Input Module

Catalog Numbers 1794-IJ2, 1794-IJ2K, 1794-IJ2XT
User Manual

Allen-Bradley

Allen-Bradley • Rockwell Software

Rockwell Automation

Important User Information

Solid state equipment has operational characteristics differing from those of electromechanical equipment. Safety Guidelines for the Application, Installation and Maintenance of Solid State Controls (publication SGI-1.1 available from your local Rockwell Automation sales office or online at http://literature.rockwellautomation.com) describes some important differences between solid state equipment and hard-wired electromechanical devices. Because of this difference, and also because of the wide variety of uses for solid state equipment, all persons responsible for applying this equipment must satisfy themselves that each intended application of this equipment is acceptable.

In no event will Rockwell Automation, Inc. be responsible or liable for indirect or consequential damages resulting from the use or application of this equipment.

The examples and diagrams in this manual are included solely for illustrative purposes. Because of the many variables and requirements associated with any particular installation, Rockwell Automation, Inc. cannot assume responsibility or liability for actual use based on the examples and diagrams.

No patent liability is assumed by Rockwell Automation, Inc. with respect to use of information, circuits, equipment, or software described in this manual.

Reproduction of the contents of this manual, in whole or in part, without written permission of Rockwell Automation, Inc., is prohibited.

Throughout this manual, when necessary, we use notes to make you aware of safety considerations.

WARNING	Identifies information about practices or circumstances that can cause an explosion in a hazardous environment, which may lead to personal injury or death, property damage, or economic loss.
IMPORTANT	Identifies information that is critical for successful application and understanding of the product.
ATTENTION	Identifies information about practices or circumstances that can lead to: personal injury or death, property damage, or economic loss. Attentions help you identify a hazard, avoid a hazard, and recognize the consequence.
SHOCK HAZARD	Labels may be on or inside the equipment, such as a drive or motor, to alert people that dangerous voltage may be present.
BURN HAZARD	Labels may be on or inside the equipment, such as a drive or motor, to alert people that surfaces may reach dangerous temperatures.

Allen-Bradley, Rockwell Automation, FLEX I/O, RSLinx, RSLogix 5000 and TechConnect are trademarks of Rockwell Automation, Inc.

Trademarks not belonging to Rockwell Automation are property of their respective companies.

This manual contains new and updated information. Changes throughout this revision are marked by change bars, as shown to the right of this paragraph.

New and Updated Information

This table contains the changes made to this revision.

Topic	Page
Inclusion of two catalogs, 1794-IJ2K and 1794-IJ2XT	1
The first chapter has been updated with the following topics: • The FLEX System • Type of Modules • The FLEX I/O Module in a Logix Control System	1
The wiring illustration for terminal base units has been updated.	20
The following topics have been added: • Configure Your FLEX I/O Module with RSLogix 5000 (Chapter 3) • Troubleshoot the Module (Chapter 5) • Electronic Data Sheet (EDS) Files	 29 35 59
The Specifications topic (Appendix A) has been updated to include specifications for 1794-IJ2K, and 1794-IJ2XT.	55
"Program Your Module" is now moved to the appendices section. It was previously Chapter 3 in the last revision.	69

Notes:

Summary of Changes

New and Updated Information iii

Preface

Who Should Use This Manual ix
Purpose of the Manual ix
About the Vocabulary ix
Related Documentation x
Common Techniques Used in this Manual xii

Chapter 1

Overview of the Frequency Input Module

Overview 1
The FLEX System 1
Type of Modules 2
Usage of the Frequency Input Module 2
The FLEX I/O Module in a Logix Control System 3
Typical Applications 5
Input Capabilities 6
Selecting the Modes of Operation 7
Output Capabilities 7
Implementing Application Features 7
How Frequency Is Calculated 8
Frequency Calculation 8
Termination on Number of Pulses 10
Missing Pulse Multiplier 10
Direction Detection 11
Chapter Summary 12

Chapter 2

Install Your FLEX I/O Frequency Input Module

Overview 13
Before You Install Your Module 13
Power Requirements 13
Install the Module 14
Mount on a DIN Rail 14
Mount on a Panel or Wall 16
Mount the Frequency Input Module on the Terminal Base Unit 18
Wiring Information 20
Wiring the Terminal Base Units (1794-TB3G shown) 20
Wire the Terminal Base Units 21
Connect Wiring to the FLEX I/O Frequency Input Module 21
Connecting Wiring Using a 1794-TB3G, 1794-TB3GK or 1794-TB3GS Terminal Base Unit 22
Resolution and Accuracy 24
Examples of Wiring to a 1794-TB3G Terminal Base Unit 27
Chapter Summary 27

Chapter 3

Configure Your FLEX I/O Module with RSLogix 5000 Software

Overview 29
Add and Configure the FLEX I/O Module. 29
Chapter Summary 33

Chapter 4

Troubleshoot the Module

Overview 35
Status Indicators. 35
Diagnostics 36
Diagnostic Bits in Word 5 of the BTR File 37
Chapter Summary 37

Chapter 5

Read and Write Configuration Maps for the FLEX I/O Module

Overview 39
Configure Your Frequency Input Module 39
Read Data From Your Module 39
Map Data for the Module 40
Frequency Input Module Image Table Mapping 40
Chapter Summary 53

Appendix A

Specifications

What This Appendix Contains 55

Appendix B

Electronic Data Sheet (EDS) Files

Overview 59
Updating EDS File 59
EDS Installation 60

Appendix C

Schematics

What This Appendix Contains 61
Gate Inputs 61
Output Circuits 62
Digital Outputs 62
DC to DC Converters – 24V DC Power Supplies 63

Appendix D

Programming Your Module with PLC Processors

Overview 65
Enter Block Transfer Instructions 65
PLC-2 Family Processor 66
PLC-3 Family Processor 66
PLC-5 Family Processor 67
PLC-5/250 Family Processor 68

Index

Read this preface to familiarize yourself with the rest of the manual. It provides information concerning:

- who should use this manual
- the purpose of this manual
- related documentation
- conventions used in this manual
- terminology used in this manual

Who Should Use This Manual

We assume that you have previously used an Allen-Bradley programmable controller, that you are familiar with its features, and that you are familiar with the terminology we use. If not, read the user manual for your processor before reading this manual.

Purpose of the Manual

This manual is a reference guide for the 1794 Frequency Input Modules. It describes the procedures for installing, configuring and troubleshooting your module.

For information on	See
Overview of the Frequency Input Module	Chapter 1
Install Your FLEX I/O Frequency Input Module	Chapter 2
Configure Your FLEX I/O Module with RSLogix 5000 Software	Chapter 3
Read and Write Configuration Maps for the FLEX I/O Module	Chapter 4
Troubleshoot the Module	Chapter 4
Specifications	Appendix A
Electronic Data Sheet (EDS) Files	Appendix B
Schematics	Appendix C
Program Your Module with PLC Processors	Appendix D

About the Vocabulary

In this manual, we refer to:

- the frequency input module as the “input module”
- the Programmable Controller as the “controller”

Related Documentation

The following documents contain additional information concerning Rockwell Automation products. To obtain a copy, contact your local Rockwell Automation office or distributor.

Resource	Description
FLEX I/O Product Profile, publication 1794-PP019	Comprehensive product profile for the FLEX I/O product line.
FLEX I/O ControlNet Redundant Media Adapter, publication 1794-5.18	Information on how to install the FLEX I/O ControlNet Redundant Media Adapter (1794-ACNR).
FLEX I/O EtherNet/IP Adapter Module Installation Instructions, publication 1794-IN082	Information on how to install the FLEX I/O EtherNet/IP Adapter Module (Catalog No. 1794-AENT).
FLEX I/O ControlNet Adapter Module Installation Instructions, publication 1794-IN128	Information on how to install the ControlNet Adapter Modules (Catalog No. 1794-ACN15, 1794-ACN15K, 1794-ACNR15, 1794-ACNR15XT, Series D).
FLEX I/O DeviceNet Adapter Module Installation Instructions, publication 1794-IN099	Information on how to install the FLEX I/O DeviceNet Adapter Modules (Catalog No. 1794-ADN, 1794-ADNK).
Remote I/O Adapter Modules Installation Instructions, publication 1794-IN098	Information on how to install the Remote I/O Adapter Modules (Catalog No. 1794-ASB, 1794-ASB2, 1794-ASBK, 1794-ASB2K).
Remote I/O Adapter Module User Manual, publication 1794-UM009	Information on how to use the Remote I/O Adapter Module (Catalog No. 1794-ASB).
FLEX I/O PROFIBUS Adapter Module Installation Instructions, publication 1794-IN087	Information on how to install the FLEX I/O PROFIBUS Adapter (Catalog No. 1794-APB).
FLEX I/O PROFIBUS Adapter Module User Manual, publication 1794-UM057	Information on how to use the FLEX I/O PROFIBUS Adapter Module (Catalog No. 1794-APB).
Flex I/O Digital Input Modules Installation Instructions, publication 1794-IN093	Information on how to install the Flex I/O Digital Input Modules (Catalog No. 1794-IB8, 1794-IB16, 1794-IB16K, 1794-IB32).
Flex I/O Digital DC Sourcing Input and Sinking Output Modules Installation Instructions, publication 1794-IN095	Information on how to install the Flex I/O Digital DC Sourcing Input and Sinking Output Modules (Catalog No. 1794-IV16, 1794-OV16, 1794-OV16P).
Flex I/O Digital DC Sourcing Output Modules Installation Instructions, publication 1794-IN094	Information on how to install the Flex I/O Digital DC Sourcing Output Modules (Catalog No. 1794-OB8, 1794-OB8EP, 1794-OB16, 1794-OB16P, 1794-OB32P).
Flex I/O Input/ Output Module Installation Instructions, publication 1794-IN083	Information on how to install the Flex I/O Input/ Output Modules (Catalog No. 1794-IB16XOB16P, 1794-IB10XOB6).
Flex I/O 8 Output Relay Module Installation Instructions, publication 1794-IN019	Information on how to install the Flex I/O 8 Output Relay Modules (Catalog No. 1794-OW8, 1794-OW8K, 1794-OW8XT).
FLEX I/O Input, Output and Input/Output Analog Modules Installation Instructions, publication 1794-IN100	Information on how to install the FLEX I/O Input, Output and Input/Output Analog Modules (Catalog No. 1794-IE8, 1794-IE4XOE2, 1794-OE4, 1794-IE8K, 1794-OE4K).
FLEX I/O Analog Module User Manual, publication 1794-6.5.2	Information on how to install the FLEX I/O Analog Modules (Catalog No. 794-OE4, 1794-IE8, 1794-IE12, 1794-OE12, 1794-IE4XOE2, 1794-IE8XOE4, 1794-IE4XOE2XT, 1794-IE8XT, 1794-OE4XT).
FLEX I/O Isolated Analog Output Module Installation Instructions, publication 1794-IN037	Information on how to install the FLEX I/O Isolated Analog Output Module (Catalog No. 1794-OF4I).

Resource	Description
FLEX I/O 4 Isolated Input Module Installation Instructions, publication 1794-IN038	Information on how to install the FLEX I/O 4 Isolated Input Module (Catalog No. 1794-IF4I).
FLEX I/O 2 In/2 Out Isolated Analog Combo Module Installation Instructions, publication 1794-IN039	Information on how to install the FLEX I/O 2 In/2 Out Isolated Analog Combo Module (Catalog No. 1794-IF2XOF2I).
FLEX I/O Isolated Analog Modules User Manual, publication 1794-6.5.8	Information on how to use the FLEX I/O Isolated Analog Modules (Catalog No. 1794-IF4I, 1794-OF4I, 1794-IF2XOF2I, 1794-IF4IXT, 1794-IF4ICFXT, 1794-OF4IXT, 1794-IF2XOF2IXT).
FLEX I/O 8 Thermocouple Input Module Installation Instructions, publication 1794-IN021	Information on how to install the FLEX I/O 8 Thermocouple Input Modules (Catalog No. 1794-IT8, 1794-IR8).
FLEX I/O 8 Input RTD Module User Manual, publication 1794-6.5.4	Information on how to use the FLEX I/O 8 Input RTD Module (Catalog No. 1794-IR8).
FLEX I/O Thermocouple/Millivolt Input Module User Manual, publication 1794-6.5.7	Information on how to use the Thermocouple and Millivolt Input Module (Catalog No. 1794-IT8).
FLEX I/O Thermocouple/RTD Input Analog Module Instructions, publication 1794-IN050	Information on how to install the Thermocouple/Millivolt Input Modules (Catalog No. 1794-IRT8, 1794-IRT8K, 1794-IRT8XT).
2-Input Frequency Module Installation Instructions, publication 1794-IN049	Information on how to install the 2-Input Frequency Module (Catalog No. 1794-IJ2, 1794-IJ2K, 1794-IJ2XT).
FLEX I/O Thermocouple, RTD, mV Input Modul, publication 1794-6.5.12	Information on how to use the FLEX I/O Thermocouple, RTD, mV Input Module (Catalog No. 1794-IRT8, 1794-IRT8K, and 1794-IRT8XT).
24V FLEX I/O 2 Channel Incremental Encoder Module Installation Instructions, publication 1794-IN063	Information on how to install the 24V FLEX I/O 2 Channel Incremental Encoder Module (Catalog No. 1794-ID2).
FLEX Integra Analog Module User Manual, publication 1793-6.5.1	Information on how to install the FLEX Integra Analog Module (Catalog No. 1793-IE2X0E1,1793-IE2XOE1S, 1793-IE4, 1793-IE4S, 1793-OE2, 1793-OE2S).
FLEX I/O 4 Channel Pulse Counter Module Installation Instructions, publication 1794-IN064	Information on how to install the 24V DC FLEX I/O 4-Channel Module (Catalog No. 1794-IP4).
FLEX I/O Very High Speed Counter Module Installation Instruction, publication 1794-IN067	Information on how to install the Very High Speed Counter Module (Catalog No. 1794-VHSC).
FLEX I/O 48V DC Input and Output Modules Installation Instructions, publication 1794-IN105	Information on how to install the FLEX I/O 48V DC Input and Output Modules (Catalog No. 1794-IC16, 1794-OC16).
FLEX I/O AC Digital Input Modules Installation Instructions, publication 1794-IN102	Information on how to install the FLEX I/O AC Input Modules (Catalog No. 1794-IA8, 1794-IA8I, 1794-IA16).
FLEX I/O Digital AC Output Modules Installation Instructions, publication 1794-IN103	Information on how to install the FLEX I/O Digital AC Output Modules (Catalog No. 1794-OA8, 1794-OA8K, 1794-OA8I, 1794-OA16).
FLEX I/O 220V AC Input and Output Modules Installation Instructions, publication 1794-IN104	Information on how to install the FLEX I/O 220V AC Input and Output Modules (Catalog No. 1794-IM8, 1794-OM8).
FLEX I/O Terminal Base Units Installation Instructions, publication 1794-IN092	Information on how to install the FLEX I/O Terminal Base Units (Catalog No. 1794-TB2, 1794-TB3, 1794-TB3K, 1794-TB3S, 1794-TB32, 1794-TB3G, 1794-TB3GK, 1794-TB3GS, 1794-TB3T, 1794-TB3TS, 1794-TBN, 1794-TBNK, 1794-TBNF).
Interconnect Cable Installation Instructions, publication 1794-5.12	Information on how to install the Interconnect Cable (Catalog No. 1794-CE1, 1794-CE3).

Resource	Description
FLEX I/O DC Power Supply Installation Instructions, publication 1794-IN069	Information on how to install the FLEX I/O DC Power Supply (Catalog No. 1794-PS13, 1794-PS3).
Industrial Automation Wiring and Grounding Guidelines, publication 1770-4.1	In-depth information on grounding and wiring Allen-Bradley programmable controllers.
Rockwell Automation Industrial Automation Glossary, AG-7.1	A glossary of industrial automation terms and abbreviations.

Common Techniques Used in this Manual

The following conventions are used throughout this manual:

- Bulleted lists such as this one provide information, not procedural steps.
- Numbered lists provide sequential steps or hierarchical information.
- *Italic* type is used for emphasis.

Overview of the Frequency Input Module

Overview

This chapter provides a description of the application and capabilities of the 1794 FLEX I/O Frequency Input module. It also explains the general algorithm for calculating frequency.

Topic	Page
The FLEX System	1
Type of Modules	2
Usage of the Frequency Input Module	2
The FLEX I/O Module in a Logix Control System	3
Typical Applications	5
Input Capabilities	6
Output Capabilities	7
How Frequency Is Calculated	8
Chapter Summary	12

The FLEX System

FLEX I/O is a small, modular I/O system for distributed applications that performs all of the functions of rack-based I/O. The FLEX system contains the following components shown below:

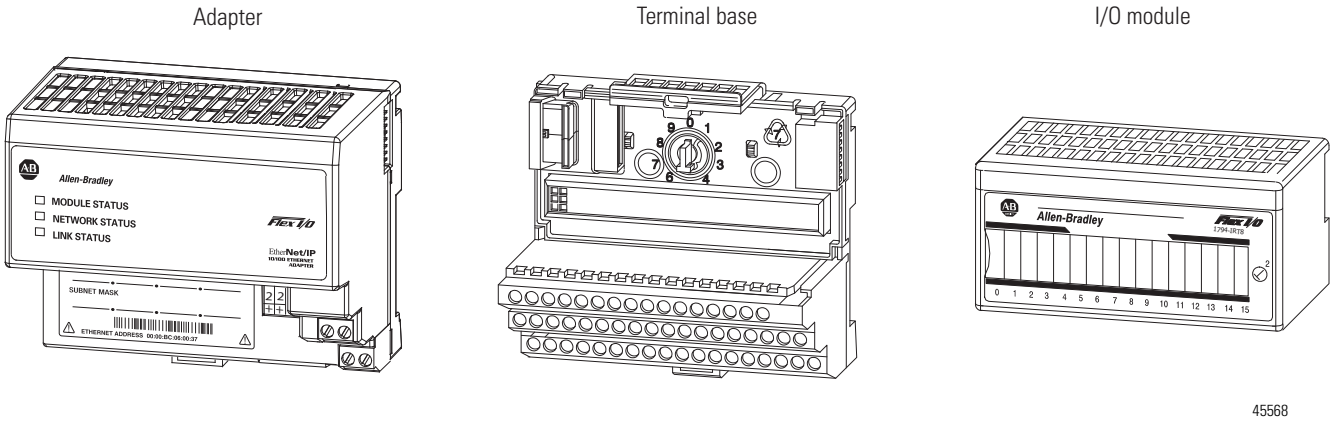

- Adapter – transfers read and write configuration data to and from the I/O module
- terminal base – contains a terminal strip to terminate wiring for two- or three-wire devices

- I/O module – contains the bus interface and circuitry needed to perform specific functions related to your application

The 1794 FLEX system consists of an adapter module, terminal base unit, DIN rail, power supply, and adapter cabling components. You can use up to 8 terminal bases per adapter module.

For detailed instructions to set up and install your module, refer to the topic, Install Your FLEX I/O Frequency Input Module, on page 13.

Type of Modules

The FLEX I/O Frequency Input modules refer to the following catalogs.

Catalog No.	Voltage	Inputs	Outputs	Description
1794-IJ2	24V DC	2	2	Digital – 2-pt 24V DC input frequency module
1794-IJ2K	24V DC	2	2	Digital – 2-pt 24V DC input frequency module, conformally coated.
1794-IJ2XT	24V DC	2	2	Digital – 2-pt 24V DC input frequency module for extended temperature.

The frequency input module is an intelligent I/O module designed to perform high-speed frequency algorithms. The module provides:

- 2 Frequency Inputs,
- 2 Gate Inputs and
- 2 Outputs.

The Frequency Inputs can accept frequencies up to 32,767 Hz and it accepts and returns binary data.

Usage of the Frequency Input Module

The FLEX I/O Frequency Input module is essentially a tachometer with the capability of reporting frequency, acceleration, and direction. Outputs are activated by alarms. Input devices range from magnetic pickup to flowmeters, to incremental encoders to proximity detectors. This intelligent I/O module is designed to perform high-speed frequency algorithms.

Power to the module is supplied from an external power supply. All power for input devices (24V DC) is supplied by the I/O module. Outputs are used to set alarms depending on the input conditions.

The module measures frequency over a user-specified time interval. A frequency calculation can start before the time interval has elapsed, if a user-specified number of frequency input pulses have occurred.

The primary use of the module is accurate, high-speed frequency measurement. A high-speed internal clock is synchronized with the frequency input to count over a user-selected sampling time or a user-defined number of frequency input pulses.

All power for input devices (4 devices, 24 V DC @ 15 mA max) is supplied by the I/O module.

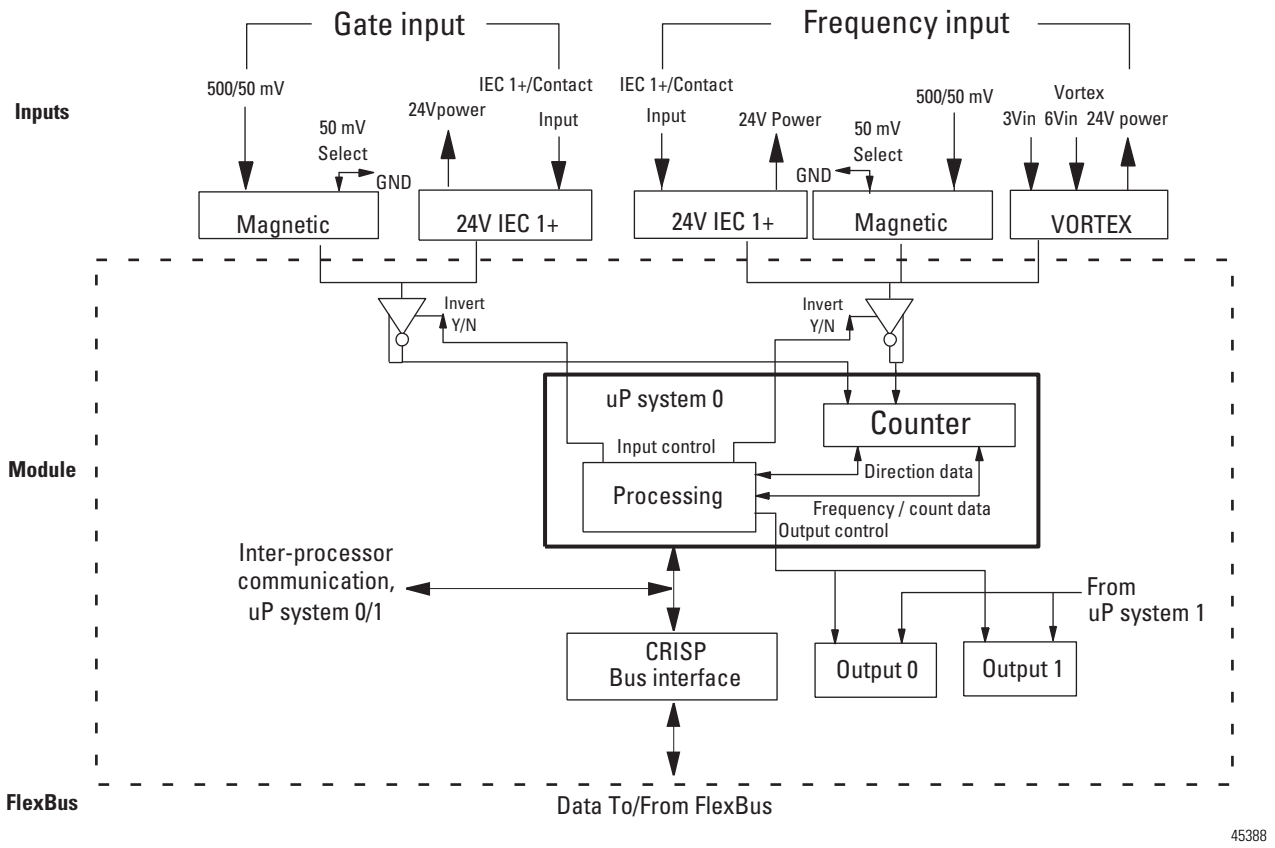

The FLEX I/O Module in a Logix Control System

The frequency input module performs high-speed frequency and/or scaling calculation operations for various industrial applications. The module interfaces with a FLEX I/O family adapter which then communicates with a programmable controller processor that has block-transfer capability and external I/O devices.

The adapter transfers data to the module (block transfer write) and from the module (block transfer read) using BTW and BTR instructions in your ladder diagram program. These instructions let the adapter read input values and status from the module, and let you write output values and configure the module mode of operation. The following illustration describes the communication process.

Typical Communication between a FLEX I/O Module and an Adapter

1794-ACN15
1794-ACNR15
1794-ACNR15K
1794-ADN
1794-AENT
1794-APBDPV1
1794-ASB
1794-APB

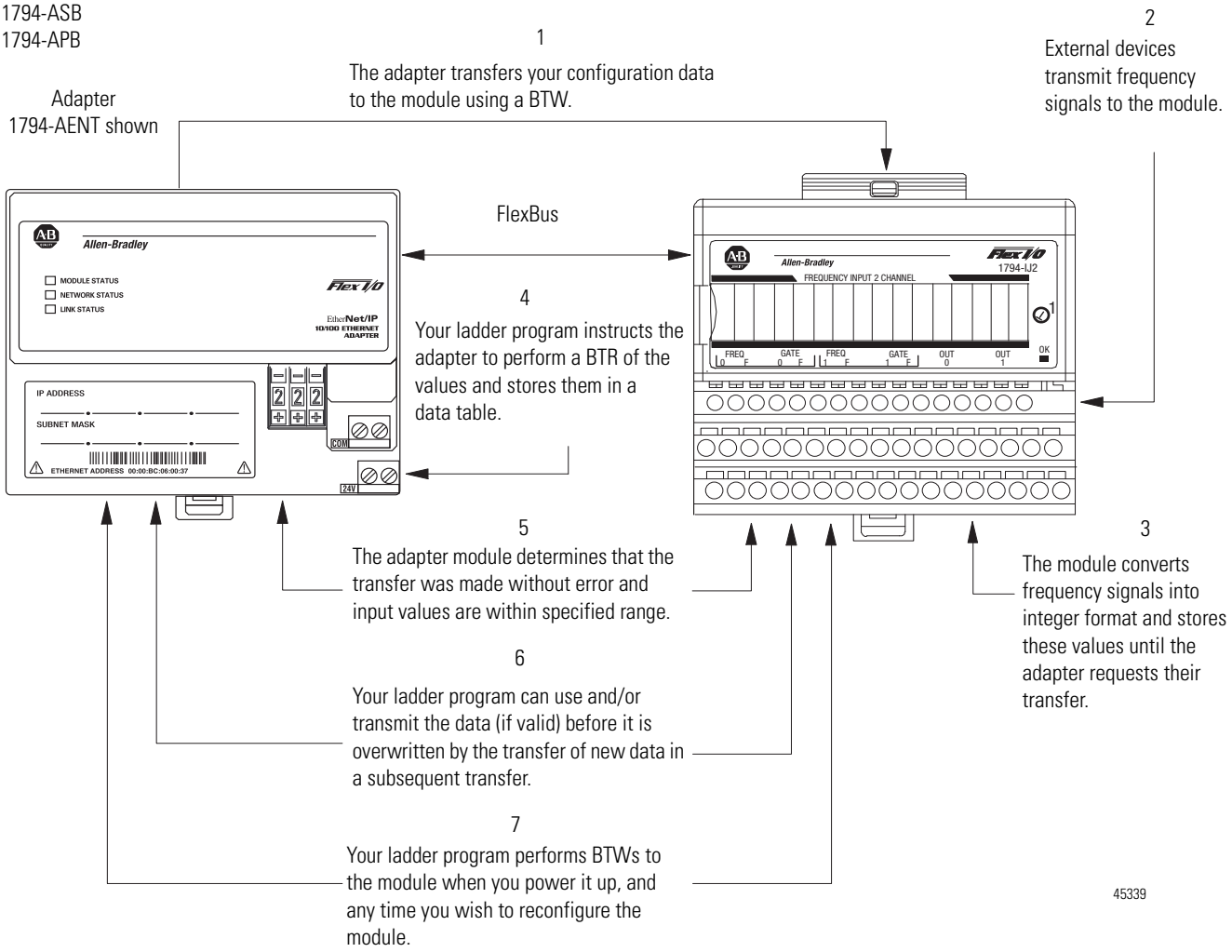

A broader view of how the FLEX I/O module interfaces with the different elements in a Logix system is shown in the sample illustration below.

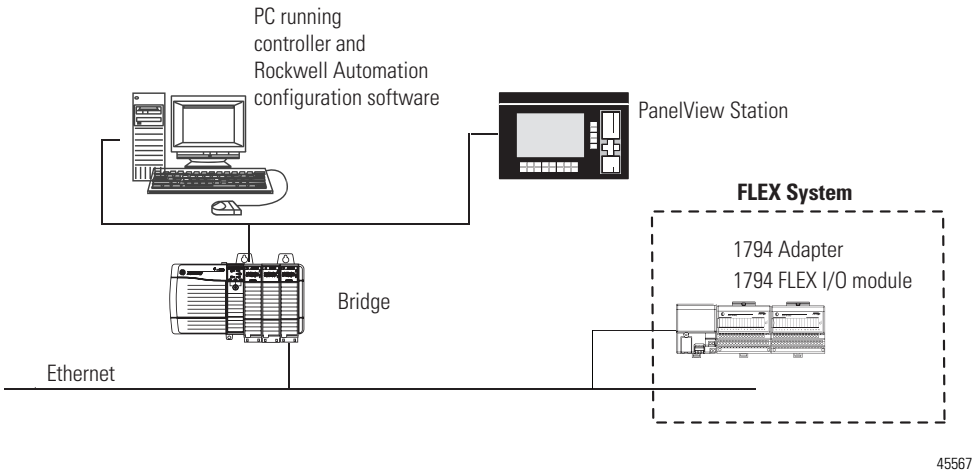

In this example, the FLEX I/O module communicates with the controller through the adapter. The controller can produce and consume tags. It can initiate MSG instructions that send and receive data or configure devices. Configuration of devices and the network is done through the personal computer running the controller and configuration software.

To learn about the steps to configure your FLEX I/O module, see Configure Your FLEX I/O Module with RSLogix 5000 Software on page 29.

ATTENTION

The following publications provide more information about EtherNet/IP, and ControlNet modules in a Logix5000 system:

- EtherNet/IP Modules in Logix5000 Control Systems, publication ENET-UM001
- ControlNet Modules in Logix5000 Control Systems, publication CNET-UM001

Typical Applications

You can use the frequency input modules in power management, automotive, food and beverage, and oil and gas industries for various flow and/or turbine metering applications. Some sample applications include:

- turbine shaft speed monitoring
- automotive paint booths
- brewery flow monitoring
- petrochemical flow and custody transfer

Input Capabilities

The frequency module has 2 input channels (mode dependent). Each of the 2 input channels may accept these input signals:

- magnetic pickup – 500 mV…28V AC peak (optional 50 mV…28V AC peak for increased signal sensitivity)
- proximity probe inputs
  - compatible with Bently Nevada 3300 – 5 mm (0.197 in.) and 8 mm (0.315 in.) – proximity transducer systems
  - provides 1 isolated 24V DC power supply (2 channels rated at 30 mA each) to power external devices
  - vortex flowmeter – 6V and 3V

You configure the 2 input channels for your specific application(s). Each input channel has two input selections:

Frequency Input (F0-F1) – you connect your input device to this input (ac, proximity sensors switch, magnetic, vortex)

Gate Input (G0-G1) – you connect your input device to this input (ac, proximity sensors switch, magnetic, vortex)

- used to determine direction – CW or CCW

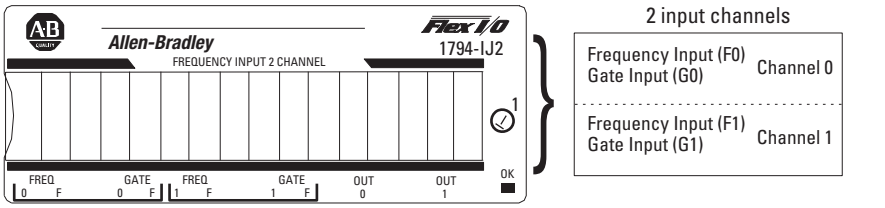

45557

Selecting the Modes of Operation

You configure the frequency input module for these modes of operation:

Modes of Operation

Mode	Use this mode to	Indicators / Alarms	Scaler / Values
Frequency and % Full Scale	• Monitor the frequency of an input with high accuracy (for example, shaft)		
	• Monitor the percentage of full scale frequency		
	• Operate frequency alarm (% full scale)	x	
	• Scale the frequency		
	• Monitor the direction of shaft rotation		x
	• Wire-off alarm with DC devices	x	
	• Missing pulse alarm	x	
Frequency and Acceleration	• Monitor the frequency of an input with high accuracy (for example, shaft)		
	• Monitor the acceleration (rate of speed change)		
	• Operate acceleration alarm (rate of change)	x	
	• Scale the frequency		
	• Monitor the direction of shaft rotation		x
	• Wire-off alarm with DC devices	x	
	• Missing pulse alarm	x	

Output Capabilities

The frequency input module has 2 assignable outputs. These outputs are designed for applications that require fast response. The outputs:

- are current sourcing at 10…31.2V DC (1 A maximum per output)
- are electrically fused (current limited to 3 A)
- can be assigned to the associated input channel with user-selectable frequency and acceleration values
- are isolated – this lets you use two separate external power supplies if desired (one for output 0 and one for output 1)

Implementing Application Features

You can use the module to implement programmable application features that are usually initiated by your controller processor. This frees up the controller

processor to do other tasks and helps increase the overall throughput of your controller system.

Application Features

Feature	Mode	Purpose	Alarm is ON when
Frequency alarm	Frequency alarm selected	Activate alarm when calculated or scaled frequency is higher than user-specified frequency value.	Frequency > user-specified value
Acceleration alarm	Acceleration alarm selected	Activate acceleration alarm when acceleration is greater than user-specified acceleration value.	| Acceleration | > user-specified value
Scaling	% full scale and acceleration	Multiply and/or divide frequency by scalar	Frequency > User-specified scaled frequency value

How Frequency Is Calculated

The following paragraphs explain the operation of the frequency input module algorithm and its modifying parameters.

Frequency Calculation

Frequency is determined by a general algorithm which can be modified by user-defined parameters. In its simplest form, the algorithm employs the user-defined Minimum Sampling Time to set a window in which to count pulses to determine the frequency. At least two pulses are required within the sample window. Frequency is determined by storing the time the first pulse occurred and then continually storing and updating the time of subsequent pulses, along with the number of pulses encountered. When the window expires, the frequency is calculated and the procedure repeats. The sequence and formula for determining frequency are shown below.

Normal Mode Frequency Determination, at Least Two Pulses in Sampling Time

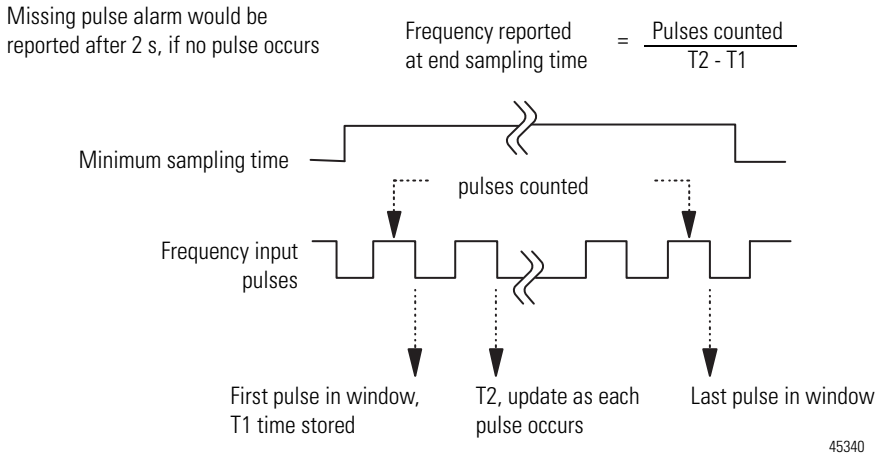

If only one pulse occurs within the sampling window, when the sample time has expired, the window is extended to 2 s to allow for a second pulse to occur. As soon as a second pulse occurs, the frequency is calculated and the procedures starts over. If no second pulse is detected, zero frequency is reported and a Missing Pulse Alarm is generated. The following figure depicts this scenario.

Normal Mode, Only One Pulse in Sampling Time, Sampling Time Extended

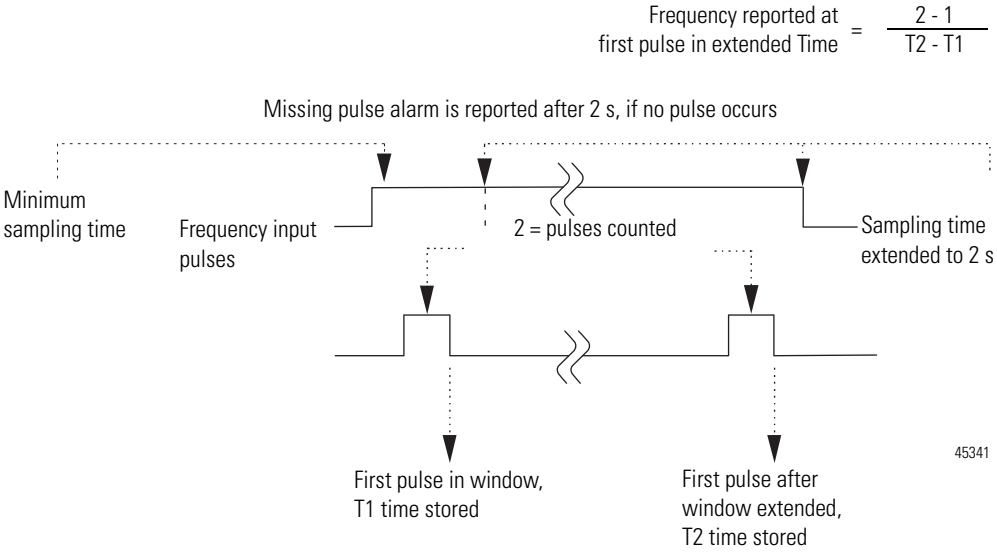

Termination on Number of Pulses

The normal mode is designed to provide wide bandwidth. However, it requires the full 2 seconds to report a missing pulse. Another user parameter, Number of Pulses to Terminate Sampling, is provided for scenarios where many pulses are expected within the sampling window, such that early determination of frequency is possible.

During normal operation, there is a sufficient number of pulses to prevent the module from entering the 2-second extension mode. Once the user-defined number of pulses is reached within the sampling window, the frequency is immediately reported.

If the sampling window has been extended to 2 seconds while waiting for a second pulse to occur, a situation which can occur during system startup, the module does not wait for the number of pulses to be reached. Instead, as soon as a second pulse occurs, the frequency is calculated based on the time between the 2 pulses, and the procedure starts over.

Termination on Number of Pulses

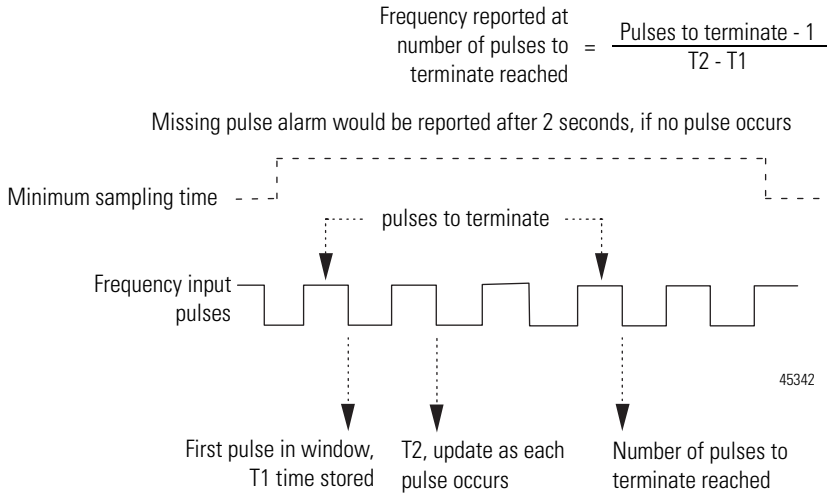

Missing Pulse Multiplier

The last user parameter which is provided to modify the frequency algorithm is the Missing Pulse Multiplier. In this case, the user can set the number of Minimum Frequency Sampling Time windows allowed to extend the time to capture a second pulse, before reporting a Missing Pulse Alarm. The intent with this parameter is to allow a tradeoff of the bandwidth available with the response time to report a missing pulse. This mechanism is shown in the following figure.

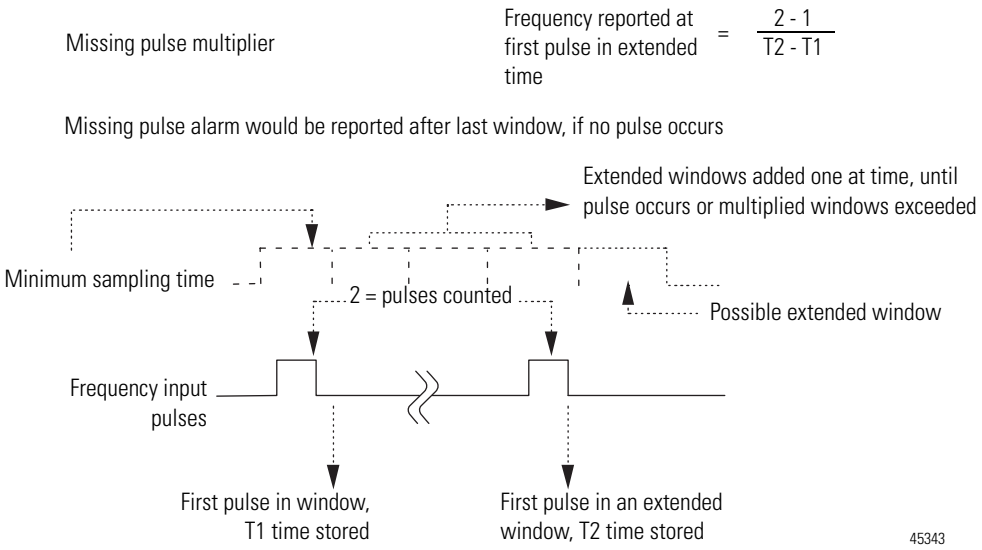

Direction Detection

Direction detection is accomplished by using the Frequency input, Gate input, and two sensors. The module expects to see a Low to High transition on the Frequency input, followed by a Low to High transition on the Gate input. This assumes both input polarity select bits are the same selection.

This corresponds to clockwise rotation. See illustration, Direction Detection – Principle of Operation, on page 12. If a Low to High transition occurs on the Gate input, followed by one on the Frequency input, the rotation is counterclockwise.

Direction Detection – Principle of Operation

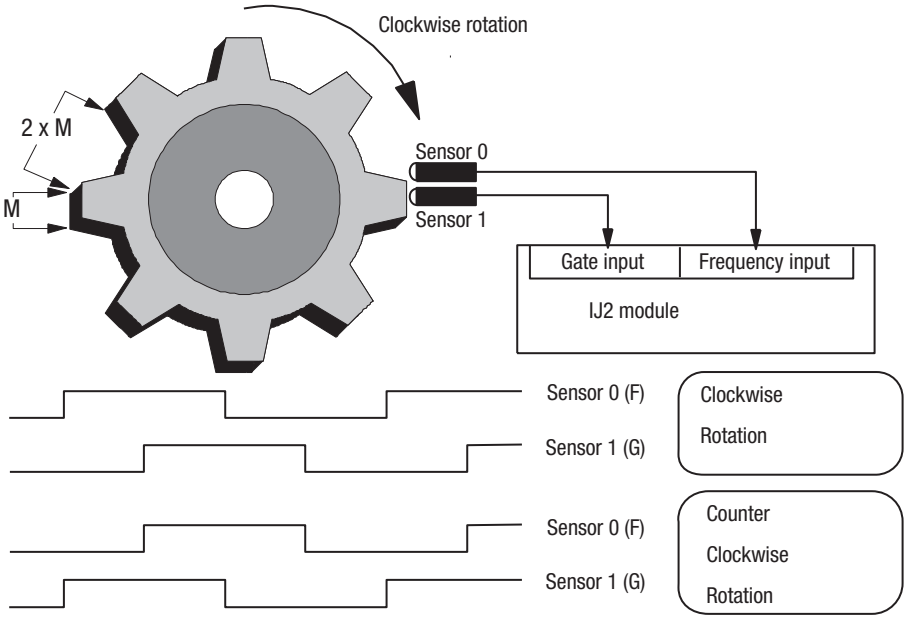

Chapter Summary

In this chapter, you learned about the frequency input module, block transfer communication, and details of how the module functions.

Install Your FLEX I/O Frequency Input Module

Overview

This chapter provides you with pre-installation requirements and instructions on how to install your FLEX I/O Frequency Input modules.

Topic	Page
Before You Install Your Module	13
Power Requirements	13
Install the Module	14
Mount on a DIN Rail	14
Mount on a Panel or Wall	16
Mount the Frequency Input Module on the Terminal Base Unit	18
Wiring Information	20
Connect Wiring to the FLEX I/O Frequency Input Module	21
Connecting Wiring Using a 1794-TB3G, 1794-TB3GK or 1794-TB3GS Terminal Base Unit	22
Resolution and Accuracy	24
Examples of Wiring to a 1794-TB3G Terminal Base Unit	27
Chapter Summary	27

Before You Install Your Module

Before installing your frequency input module in the FLEX I/O system, you need to:

- calculate the power requirements of all modules in each FLEX I/O system, and
- position the keyswitch on the terminal base.

ATTENTION

This FLEX I/O module does not receive primary operational power from the backplane. 24V DC power must be applied to your module before installation. If power is not applied, the module position may appear to the adapter as an empty slot in your chassis.

Power Requirements

The wiring of the terminal base unit is determined by the current draw through the terminal base. Make certain that the current draw does not exceed 10 A.

ATTENTION

Total current draw through the terminal base unit is limited to 10 A. Separate power connections may be necessary.

The frequency input module requires 30 mA at 5V DC from the FlexBus backplane.

Methods of wiring the terminal base units are shown in the illustration below.

ATTENTION

Do not daisychain power or ground from the terminal base unit to any AC or DC digital module terminal base unit.

Install the Module

Installation of the frequency input module consists of:

- mounting the terminal base unit
- installing the module into the terminal base unit
- installing the connecting wiring to the terminal base unit

Mount on a DIN Rail

ATTENTION

Do not remove or replace a terminal base unit when power is applied. Interruption of the FlexBus can result in unintended operation or machine motion.

Install the Terminal Base Unit

1. Remove the cover plug in the male connector of the unit to which you are connecting this terminal base unit.

2. Check to make sure that the 16 pins in the male connector on the adjacent device are straight and in line so that the mating female connector on this terminal base unit will mate correctly.

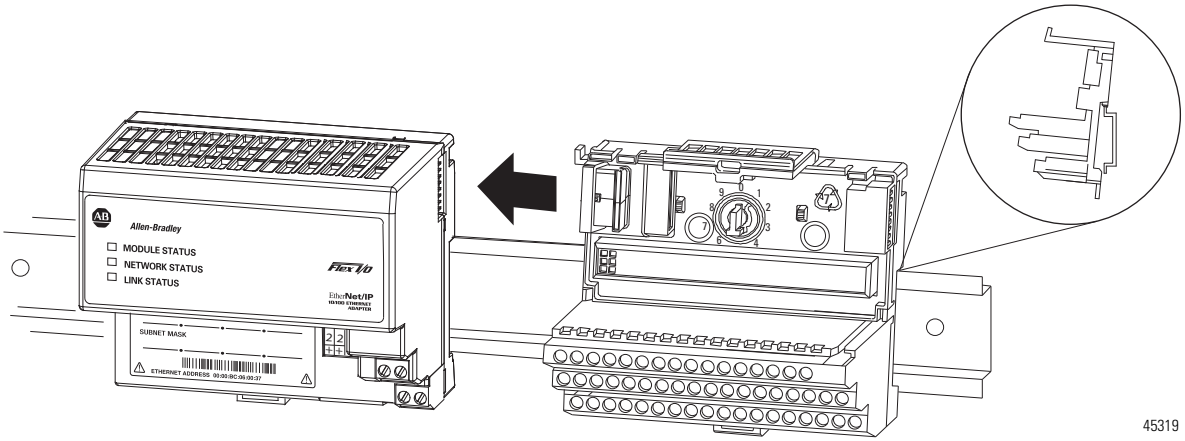

Make certain that the female FlexBus connector is fully retracted into the base unit.

3. Position the terminal base at a slight angle and hooked over the top of the 35 x 7.5 mm DIN rail A (Allen Bradley part number 199-DR1; 46277-3).

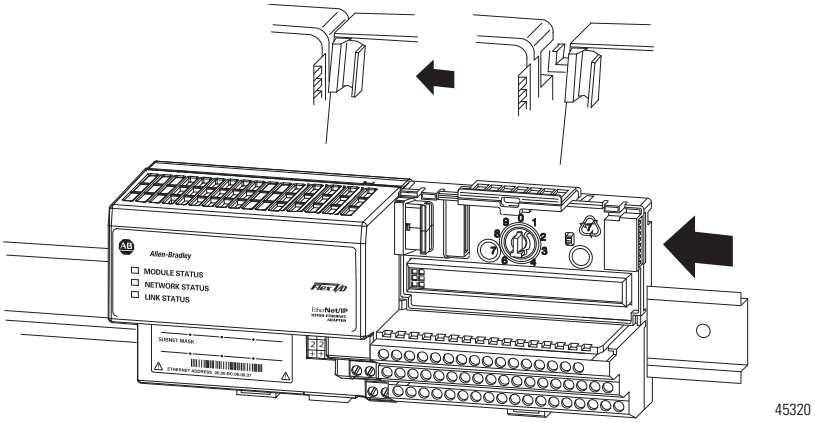

4. Slide the terminal base over tight against the adapter, or proceeding terminal base. Make sure the hook on the terminal base slides under the edge of the adapter, or proceeding terminal base, and the FlexBus connector is fully retracted.

5. Rotate the terminal base onto the DIN rail with the top of the rail hooked under the lip on the rear of the terminal base.
Use caution to make sure that the female FlexBus connector does not strike any of the pins in the mating male connector.

6. Press down on the terminal base unit to lock the terminal base on the DIN rail. If the terminal base does not lock into place, use a screwdriver or similar device to open the locking tab, press down on the terminal base until flush with the DIN rail and release the locking tab to lock the base in place.

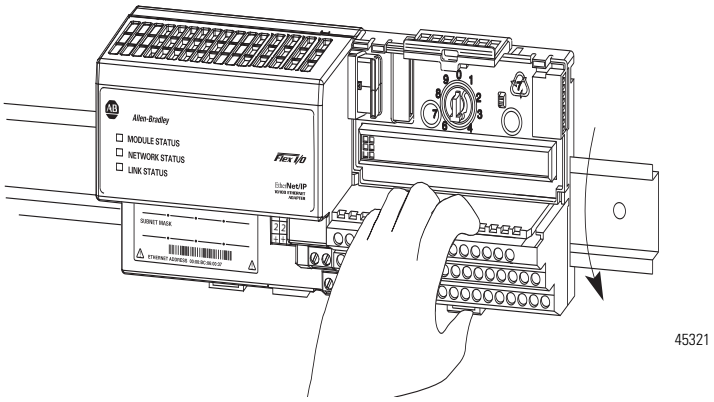

Gently push the FlexBus connector into the side of the adapter, or proceeding terminal base to complete the backplane connection.

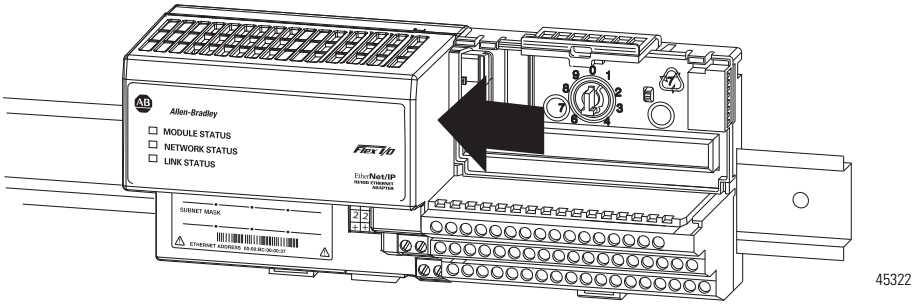

For specific wiring information, refer to the installation instructions for the module you are installing in this terminal base unit.

7. Repeat the above steps to install the next terminal base unit. Ensure that the cover of the FlexBus connector on the last terminal base unit is in place.

Mount on a Panel or Wall

Installation of a FLEX I/O system on a wall or panel consists of:

- laying out the drilling points on the wall or panel.
- drilling the pilot holes for the mounting screws.
- mounting the adapter mounting plate.

- installing the terminal base units and securing them to the wall or panel.

Use the mounting kit Cat. No. 1794-NM1 for panel or wall mounting.

1794-NM1 Mounting Kit

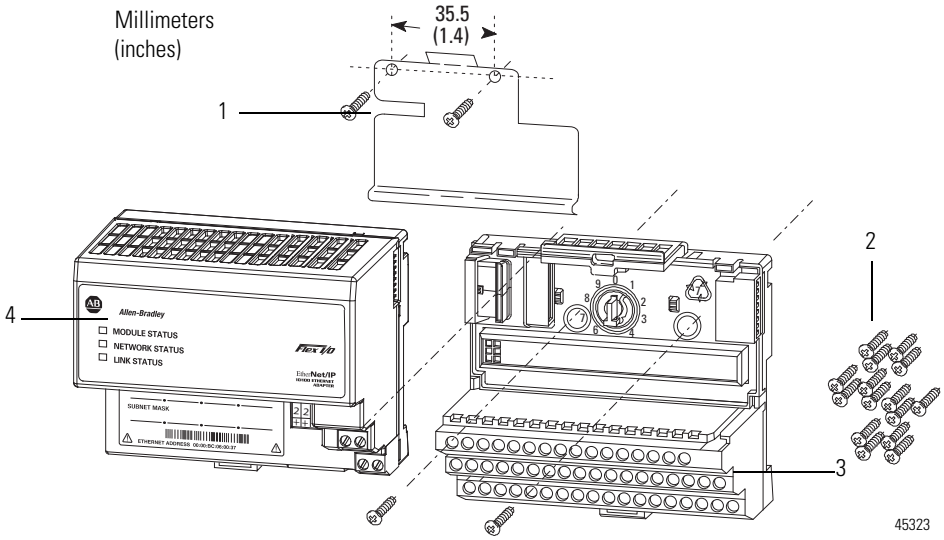

	Description		Description
1	Mounting plate for adapter	3	Terminal base unit (not included)
2	#6 Self-tapping screws	4	Adapter module (not included)

To install the mounting plate on a wall or panel:

1. Lay out the required points on the wall or panel as shown in the drilling dimension drawing.

Drilling Dimensions for Panel or Wall Mounting

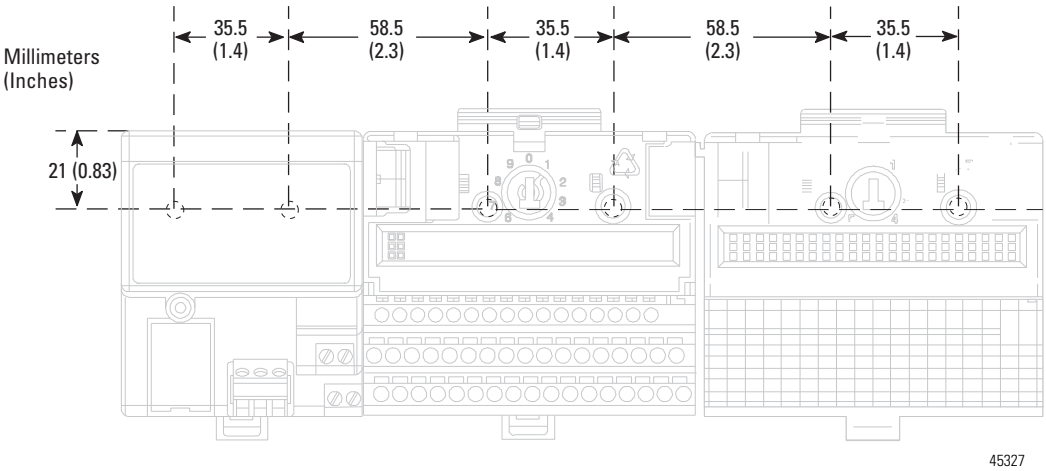

2. Drill the necessary holes for the #6 self-tapping mounting screws.

3. Mount the mounting plate for the adapter module using two #6 self-tapping screws – 18 screws are included for mounting up to 8 modules and the adapter.

IMPORTANT Make certain that the mounting plate is properly grounded to the panel. Refer to Industrial Automation Wiring and Grounding Guidelines, publication 1770-4.1.

4. Hold the adapter at a slight angle and engage the top of the mounting plate in the indention on the rear of the adapter module.

5. Press the adapter down flush with the panel until the locking lever locks.

6. Position the terminal base unit up against the adapter and push the female bus connector into the adapter.

7. Secure to the wall with two #6 self-tapping screws.

8. Repeat for each remaining terminal base unit.

Mount the Frequency Input Module on the Terminal Base Unit

The Frequency Input module mounts on a 1794-TB3G or 1794-TB3GS terminal base unit.

1. Rotate keyswitch (3) on terminal base unit (4) clockwise to position 1 as required for the module.
   Do not change the position of the keyswitch after wiring the terminal base unit.

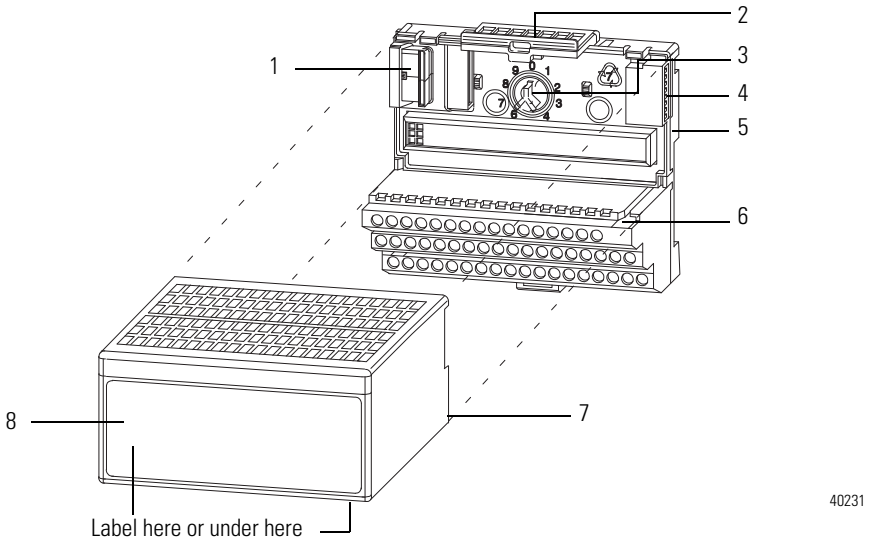

	Description		Description
1	FlexBus connector	5	Base unit
2	Latching mechanism	6	Alignment groove
3	Keyswitch	7	Alignment bar
4	Cap plug	8	Module

2. Make certain the FlexBus connector (1) is pushed all the way to the left to connect with the neighboring terminal base or adapter.
   You cannot install the module unless the connector is fully extended.

3. Make sure the pins on the bottom of the module are straight so they will align properly with the connector in the terminal base unit.

ATTENTION

If you remove or insert the module while the backplane power is on, an electrical arc can occur. This could cause an explosion in hazardous location installations. Be sure that power is removed or the area is nonhazardous before proceeding.

4. Position the module (8) with its alignment bar (7) aligned with the groove (6) on the terminal base.

5. Press firmly and evenly to seat the module in the terminal base unit.
   The module is seated when the latching mechanism is locked into the module.

6. Remove cap plug and attach another terminal base unit to the right of this terminal base unit if required.
   Make sure the last terminal base has the cap plug in place.

IMPORTANT The adapter is capable of addressing eight modules. Do not exceed a maximum of eight terminal base units in your system.

Wiring Information

This section provides essential wiring information for the 1794-TB3G, 1794-TB3GK, and 1794-TB3GS terminal base units. It also includes instructions for connecting wiring to the FLEX I/O module.

Wiring the Terminal Base Units (1794-TB3G shown)

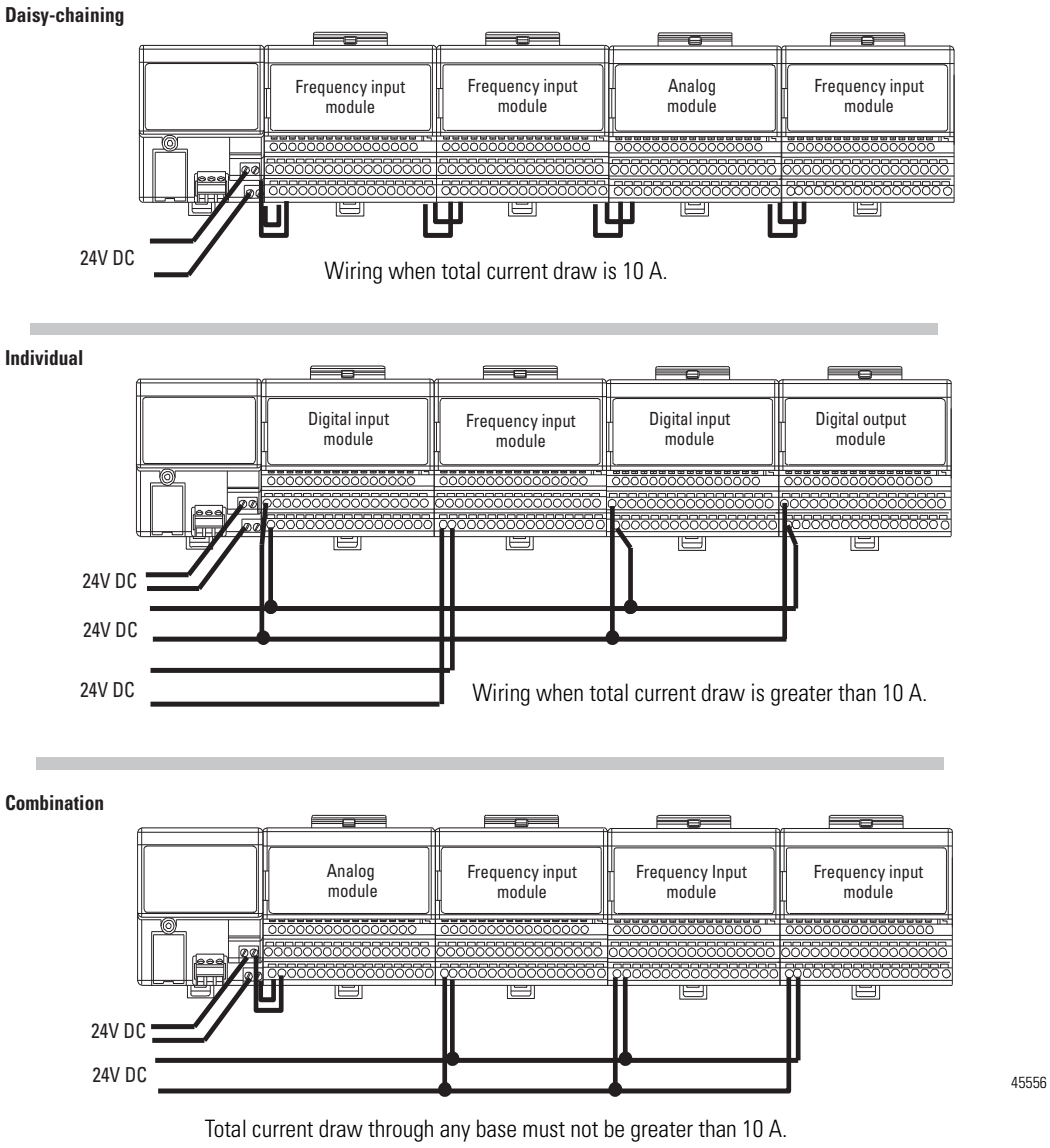

Total current draw through any base must not be greater than 10 A.

ATTENTION

Take note of the following considerations when wiring your terminal base units:

- All modules must be frequency or analog modules for the daisychain configuration.
- Use the individual type of configuration for any "noisy" DC digital I/O modules in your system.
- All modules powered by the same power supply must be frequency or analog modules for the combination type of configuration.

Wire the Terminal Base Units

Wiring the FLEX I/O Frequency Input module is done using the 1794-TB3G, 1794-TB3GK or the 1794-TB3GS terminal base unit.

1794-TB3G, 1794-TB3GK and 1794-TB3GS Wiring Connections

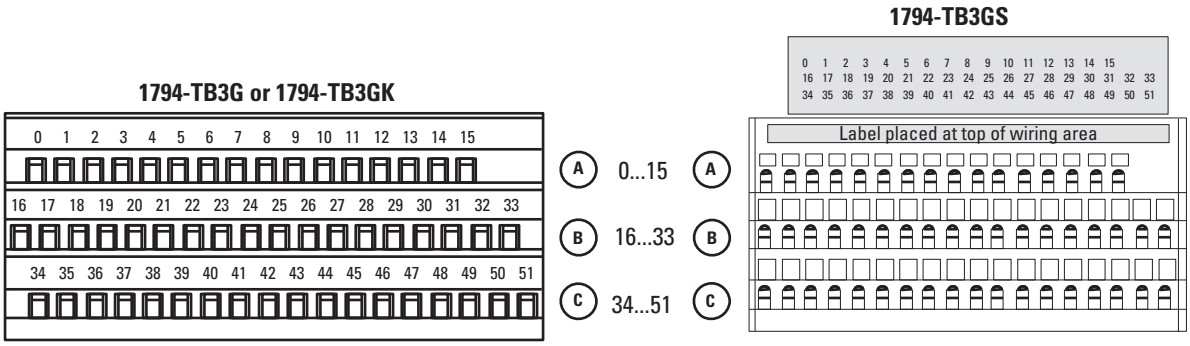

34 and 50 = 24V DC
35 and 51 = common
16 and 33 = chassis
40…45 = chassis ground

35 and 51 = common
34 and 50 = 24V DC
16 and 33 = chassis ground
40…45 = chassis ground

45328

Connect Wiring to the FLEX I/O Frequency Input Module

Wiring to the Frequency Input module is made through the terminal base unit on which the module mounts.

The module is compatible with the 1794-TB3G, 1794-TB3GK and 1794-TB3GS terminal base units.

Connecting Wiring Using a 1794-TB3G, 1794-TB3GK or 1794-TB3GS Terminal Base Unit

1. Connect individual signal wiring to numbered terminals on the 0…15 row (A) and 17…32 row (B) on the terminal base unit as indicated in the table below.

2. Connect output signal and supply wiring to the numbered terminals on rows B and C, as shown in the figure, 1794-TB3G, 1794-TB3GK and 1794-TB3GS Wiring Connections, on page 21.

3. Terminate shields to terminals 16 or 33 on row B, or 40…45 on row C.

4. Connect +24V DC to terminal 34 on the 34…51 row (C), and 24V common to terminal 35 on the 34…51 row (C).

ATTENTION

To reduce susceptibility to noise, power frequency modules and digital modules from separate power supplies. Do not exceed a length of 10 m (33 ft) for DC power cabling.

5. If daisychaining the +24V DC power to the next 1794-TB3G or 1794-TB3GS base unit, connect a jumper from terminal 50 (+24V) on this base unit to terminal 34 and from terminal 51 (24V DC common) to terminal 35 on the next 1794-TB3G or 1794-TB3GS base unit.

ATTENTION

Use extreme care when connecting wiring to an adjacent terminal base unit. Wiring for the 1794-TB3G and 1794-TB3GS terminal base units is different from other 1794 terminal base units.

ATTENTION

Do not daisychain power or ground from the 1794-TB3G or 1794-TB3GS terminal base unit to any AC or DC digital module terminal base unit.

ATTENTION

24V DC power must be applied to your module before operation. If power is not applied, the module position will appear to the adapter as an empty slot in your chassis. If the adapter does not recognize your module after installation is completed, cycle power to the adapter.

Wiring Connections for the Frequency Input Module

	Channel 0 Terminals[5]			Channel 1 Terminals[5]			
Types of Inputs	**Power**	**Input**	**RET[7]**	**Power**	**Input**	**RET[7]**	**GND[5]**
Frequency							
24V DC IEC1+ Proximity[1] [2]	7	6	3	8	9	12	
24V DC Contact Switch[3]	7	6	3	8	9	12	
500mV AC Magnetic Pickup	7[6]	5	3	8	10	12	
50mV AC Magnetic Pickup[4]	7	5	3	8	10	12	
6V AC Vortex	2	1	3	13	14	12	
3V AC Vortex	2	0	3	13	15	12	
Gate							
24V DC IEC1+ Proximity[1] [2]	24	23	20	25	26	29	
24V DC Contact Switch[3]	24	23	20	25	26	29	
500mV AC Magnetic Pickup	24	22	20	25	27	29	
50mV AC Magnetic Pickup[4]	24	22	20	25	27	29	

(1) As defined by standard IEC 1131-2.

(2) RET not used on 2-wire devices.

(3) Add external resistor from 24V to F or G for wire-off detection (0.4 mA) – (≈ 50 KΩ).

(4) Add a jumper between 50 mV and RET (Frequency – channel 0 = 3…4; channel 1 = 11…12) (Gate – channel 0 = 21…20; channel 1 = 28…29).

(5) Connect cable shields to GND terminals.

(6) 24V terminal may not be used on 2-wire magnetic devices.

(7) All 4 RET terminals (ch 0 and 1, Freq, Gate) are internally connected together.

ATTENTION

Total current draw through the terminal base unit is limited to 10 A. Separate power connections to the terminal base unit may be necessary.

Connections for Terminal Base 1794-TB3G shown

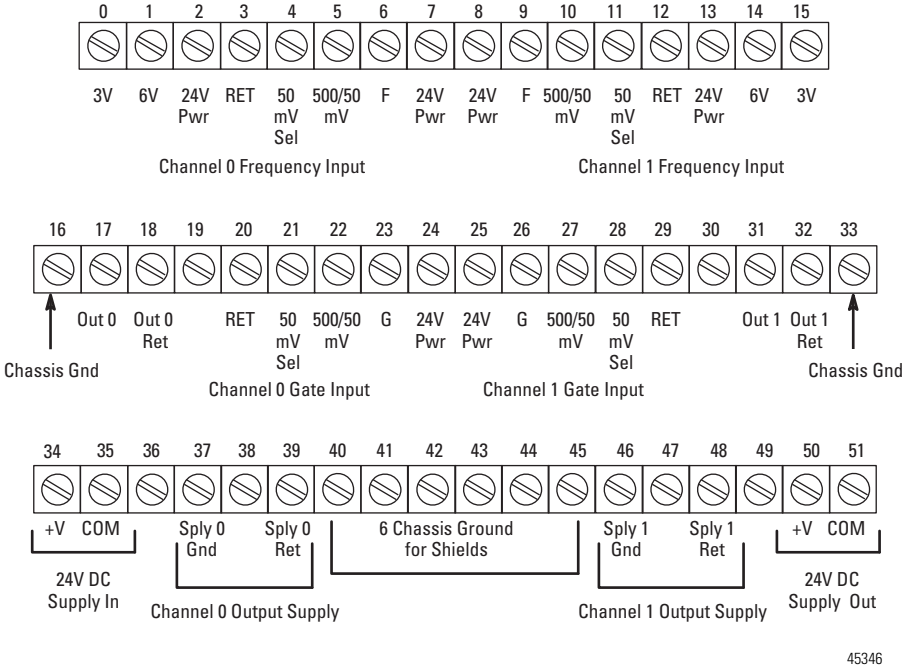

+24V DC = Terminals C-34 and C-50
COM = C-35 and C-51
Chassis Ground = Terminals B-16, B-33, C-38, C-40…45, and C-47
NC = No connection

For daisychaining:
Supply in – C-34 (+) and C-35 (-)
Supply out – C-50 (+) and C-51 (-)

Output Alarm Connections

Output Alarm Connections	Channel 0 Terminals[1]				Channel 1 Terminals[1]			
	Supply +	Supply RET	Out +	Out RET	Supply +	Supply RET	Out +	Out RET
Supply	C-37	C-39			C-46	C-48		
Output			B-17	B-18			B-31	B-32

(1) Connect cable shields to GND connections.

Resolution and Accuracy

1 Hz or 0.1 Hz (depending on frequency range bit setting), or + accuracy specification listed below, whichever is greater.

Resolution % is defined as:

$$\textbf{\% Resolution} = \frac{100}{\text{Count frequency x minimum frequency sample time}}$$

Accuracy % is defined as:

$$\textbf{\% Accuracy} = 100\left[1 - \frac{\dfrac{\text{Minimum frequency sample time}}{2}}{\dfrac{\text{Minimum frequency sample time}}{} + \dfrac{1}{\text{count frequency}}}\right]$$

Resolution and Accuracy

	Accuracy					
Minimum Frequency Sample Time (ms)	**Sampling Accuracy**	**Time Base Accuracy**	**Worst Case Total Accuracy**	**Deviation in Hz Due to Total Accuracy**		**Resolution**
				1.0…3276.7 Frequency Range (in Hz)	**1…32767 Frequency Range (in Hz)**	
2	0.02%	0.0225%	0.0425	0.1…1.4	1…14	0.01%
4	0.01%	0.0225%	0.0325	0.1…1.1	1…11	0.005%
5	0.008%	0.0225%	0.0305	0.1…1.0	1…10	0.004%
10	0.004%	0.0225%	0.0265	0.1…0.9	1…9	0.002%
20	0.002%	0.0225%	0.0245	0.1…0.8	1…8	0.001%
50	0.0008%	0.0225%	0.0233	0.1…0.8	1…8	0.0004%
100	0.0004%	0.0225%	0.0229	0.1…0.8	1…8	0.0002%
200	0.0002%	0.0225%	0.0227	0.1…0.7	1…7	0.0001%
500	0.00008%	0.0225%	0.02258	0.1…0.7	1…7	0.00004%
1000	0.00004%	0.0225%	0.02254	0.1…0.7	1…7	0.00002%

Input Map

Bit	**15**	**14**	**13**	**12**	**11**	**10**	**09**	**08**	**07**	**06**	**05**	**04**	**03**	**02**	**01**	**00**
Word	**Read**															
0	Frequency 0…32,767 or 0.0…3,276.7 Channel 0															
1	% Full Scale 0.0…3,276.7% Channel 0 or Acceleration -32,768…32,767 Channel 0															
2	Frequency 0…32,767 or 0.0…3,276.7 Channel 1															
3	% Full Scale 0.0…3,276.7% Channel 1 or Acceleration -32,768…32,767 Channel 1															
4	R	R	Direction Ch 0		GS Ch 0	F/A Ch 0	WO Ch 0	MPA Ch 0	R	R	Direction Ch 1		GS Ch 1	F/A Ch 1	WO Ch 1	MPA Ch 1

Input Map

Bit	15	14	13	12	11	10	09	08	07	06	05	04	03	02	01	00
Word	**Read**															
5	Reserved				Diagnostic Status Channel 0				Reserved				Diagnostic Status Channel 1			
6	Reserved															

Where:
R = Reserved
GS = Gate state
F/A = Frequency/Acceleration alarm
WO = Wire-off alarm
MPA = Missing pulse alarm

Output Map

Dec	15	14	13	12	11	10	09	08	07	06	05	04	03	02	01	00
Oct	**17**	**16**	**15**	**14**	**13**	**12**	**11**	**10**	**07**	**06**	**05**	**04**	**03**	**02**	**01**	**00**
0	CF	SSM	FR Ch0	Number of pulses to terminate sampling 0…7 Ch 0			MPM 0…3 Ch 0		R	LF	FR Ch 1	Number of pulses to terminate sampling 0…7 Ch 1			MPM 0…3 Ch 1	
1	Maximum Frequency 0…32.767 or 0.0…3,276.7 - or - Absolute Value of Acceleration - 0…32767 Channel 0															
2	Frequency Scaling Divisor 0…255 Channel 0								Frequency Scaling Multiplier 0…255 Channel 0							
3	WOFG Ch0	WOFF Ch0	IGI Ch0	IFI Ch0	Minimum Frequency Sample Time 0…15 Ch 0				Init St Up Ch 0	ACT 0…3 Ch 0		F/AA S Ch0	MPDM 0…3 Ch 0		WOFM 0…3 Ch0	
4	Maximum Frequency 0…32,767 or 0.0…3,276.7 - or - Absolute Value of Acceleration – 0…32,767 Channel 1															
5	Frequency Scaling Divisor 0…255 Channel 1								Frequency Scaling Multiplier 0…255 Channel 1							
6	WOFG Ch1	WOFF Ch1	IGI Ch 1	IFI Ch 1	Minimum Frequency Sample Time 0…15 Ch 1				Init St Up Ch 1	ACT 0…3 Ch 1		F/AAS Ch 1	MPDM 0…3 Ch 1		WOFM 0…3 Ch 1	
7	Reserved															

Where:
CF = Communication fault
SSM = Safe state mode
FR = Frequency range
R = Reserved
MPM = Missing pulse multiplier
LF = Local Fault mode
F/AAS = Frequency/Accel alarm select
WOFF = Wire-off fault frequency
WOFG = Wire-off fault gate
WOFM = Wire-off fault mode
IGI = Invert gate input
IFI = Invert frequency input
ACT = Acceleration calculation time
MPDM = Missing pulse delay multiplier

Examples of Wiring to a 1794-TB3G Terminal Base Unit

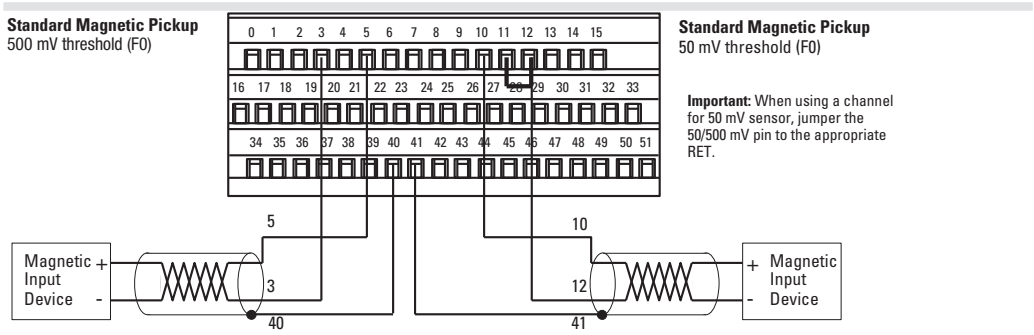

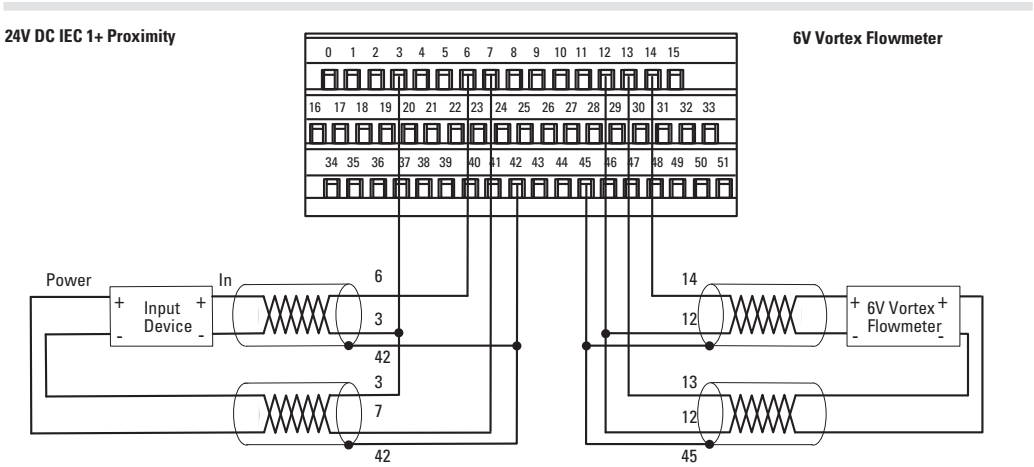

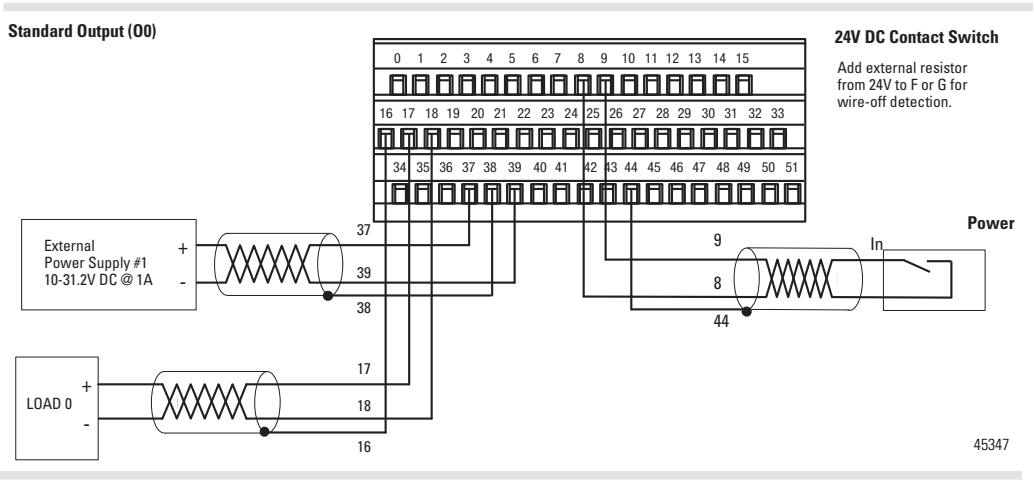

Chapter Summary

This chapter provided you with instructions on how to install the input module in an existing programmable controller system and how to wire to a terminal base unit.

Notes:

Configure Your FLEX I/O Module with RSLogix 5000 Software

Overview

This chapter describes how to configure the 1794-IJ2 module for the ControlLogix and CompactLogix system. The module can communicate through different networks such as ControlNet, Ethernet, Profibus, among others. In the examples below, the Ethernet adapter is used for communication between the Logix processor and the FLEX I/O bus.

ATTENTION

If using an SLC controller with ControlNet, refer to the associated I/O scanner documentation.

If using a PLC 5 controller, refer to the PLC 5 controller documentation for ControlNet configuration information.

You need to follow these series of steps to fully configure your FLEX I/O module in the RSLogix 5000 software.

1. Add and configure the new local bridge module, such as 1756-ENBT, to your project. This user manual assumes you have already properly configured this module. Refer to the associated documentation.
2. Add and configure the new adapter module, such as a FLEX I/O EtherNet Adapter (1794-AENT). This user manual assumes you have already properly configured this module. Refer to the associated documentation.
3. Add and configure your FLEX I/O module. See the steps provided below.
4. Download the configuration to the controller.

Add and Configure the FLEX I/O Module

To be able to add your FLEX I/O Frequency Input module, you should have already added and configured your Ethernet bridge and adapter.

1. Select New Module for the I/O Configuration.

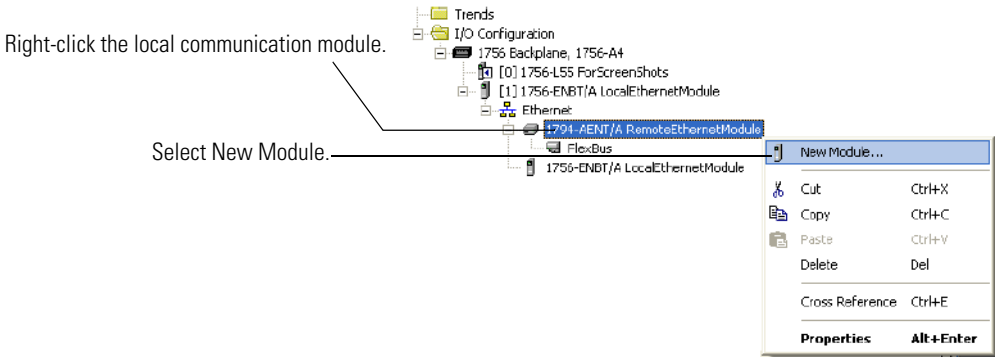

2. The Select Module dialog appears.

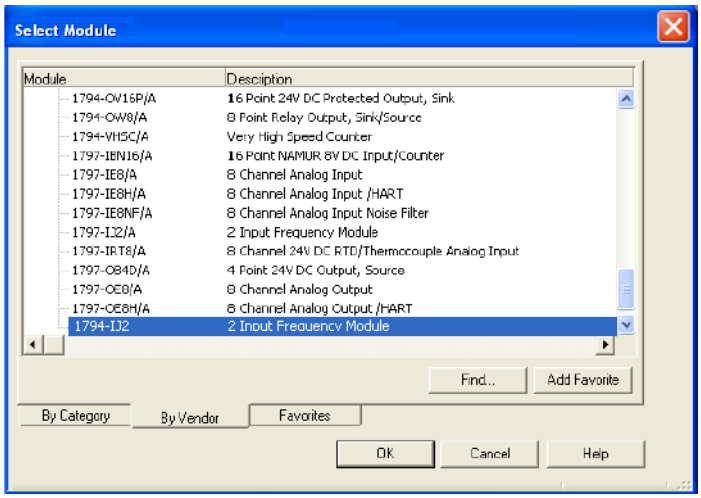

Select the FLEX I/O module from the Specialty module type. Click OK

3. The New Module dialog appears.

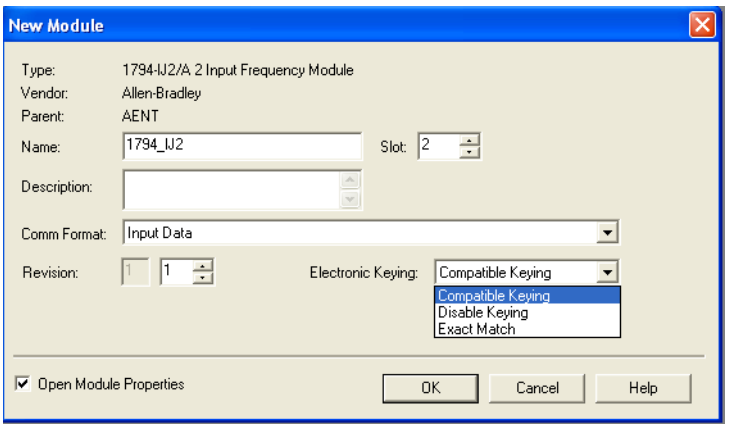

Complete the following fields and click OK.

- Name
- Description
- Comm Format
- Electronic Keying

4. On the Connection tab, specify a value for the Requested Packet Interval(RPI).

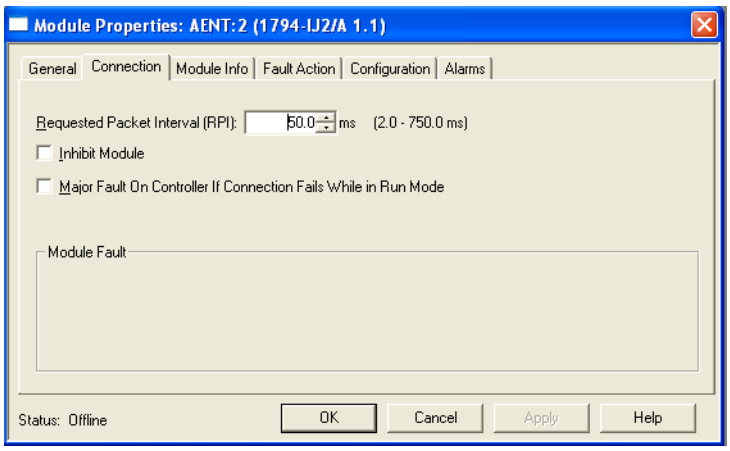

5. On the Fault Action tab, specify the following:
- Fault Mode
- Communication Fault Behavior

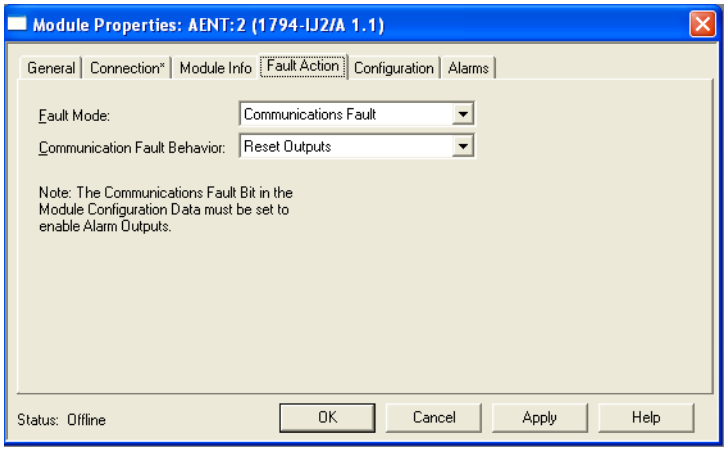

6. On the Configuration tab, specify the following:
   - Channel
   - Frequency or Acceleration

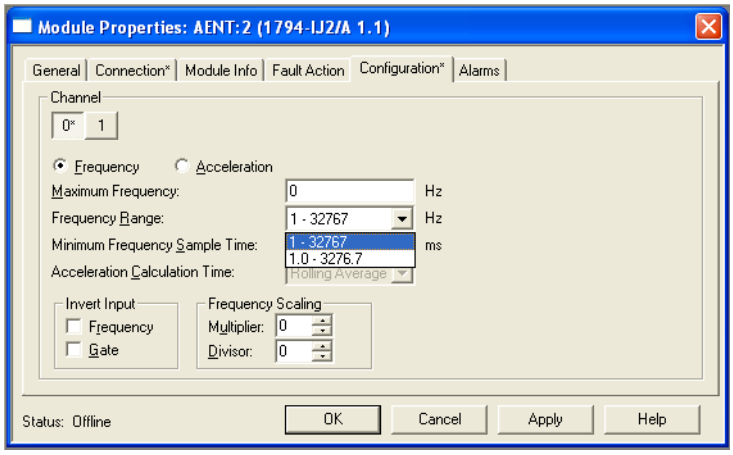

If you choose Frequency, go to step 8. Go to step 9 if you choose Acceleration.

7. For Frequency mode, specify the following:
   - Maximum Frequency
   - Frequency Range
   - Minimum Frequency Sample Time

8. For Acceleration mode, specify the following:
   - Maximum Frequency
   - Frequency Range
   - Minimum Frequency Sample Time
   - Acceleration Calculation Time

9. Click the Alarms tab and specify the following:
   - Missing Pulse Multiplier
   - Missing Pulse Delay Multiplier
   - Pulses to Terminate Sampling
   - Wire-off/Missing Pulse Fault Select Mode

10. Click OK on the Module Properties dialog after you have configured the different parameters.

The following options are available for each parameter on the Configuration and Alarms tabs of the Module Properties dialog.

Configuration Parameters

Module Property	Configuration Options
Maximum Frequency	0 Hz (default)
Frequency Range	1…32767 1.0…3276.7
Minimum Frequency Sample Time	2…100
Acceleration Calculation Time	Rolling Average 8 16 32
Missing Pulse Multiplier	None 2 8 32
Pulses to Terminate Sampling	Minimum Frequency Sample Time 2 4 8 16 32
Wire-off/Missing Pulse Fault Select Mode	Disabled Alarm Only Alarm/Maximum Frequency Alarm/Minimum Frequency

You should now see the 1794-IJ2 module added to your I/O Configuration tree.

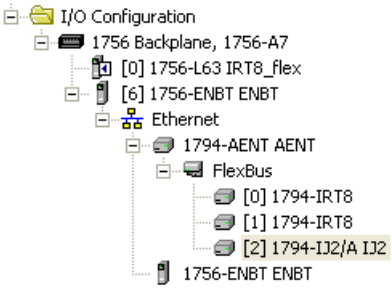

To be able to check if your configured parameters are acceptable and the configuration is successful, you need to go online.

Refer to the RSLogix 5000 Online Help for detailed descriptions of the configuration parameters.

Chapter Summary

This chapter provided instructions and required parameters for setting up your FLEX I/O module on an EtherNet/IP network.

Notes:

Read and Write Configuration Maps for the FLEX I/O Module

Overview

This chapter describes how to configure, read data from, and map data to your Frequency Input module.

Topic	Page
Configure Your Frequency Input Module	35
Read Data From Your Module	35
Map Data for the Module	36
Frequency Input Module Image Table Mapping	36
Chapter Summary	49

Configure Your Frequency Input Module

The frequency module is configured using a group of data table words that are transferred to the module using a block transfer write instruction.

The software features available for configuration are:

- frequency range
- number of pulses to sample
- sampling time
- safe states
- fault modes
- alarms

Configure your module for its intended operation by means of your programming terminal and write block transfers.

During normal operation, the processor transfers from 1…8 words to the module when you program a BTW instruction to the module address.

Read Data From Your Module

Read programming transmits status and data from the frequency input module to the processor data table in one I/O scan. The processor user program initiates the request to transfer data from the frequency input module to the processor.

Map Data for the Module

The following read and write words and bit/word descriptions describe the information written to and read from the frequency input module. The module uses up to 6 words of input data and up to 7 words of output data. Each word is composed of 16 bits.

Frequency Input Module Image Table Mapping

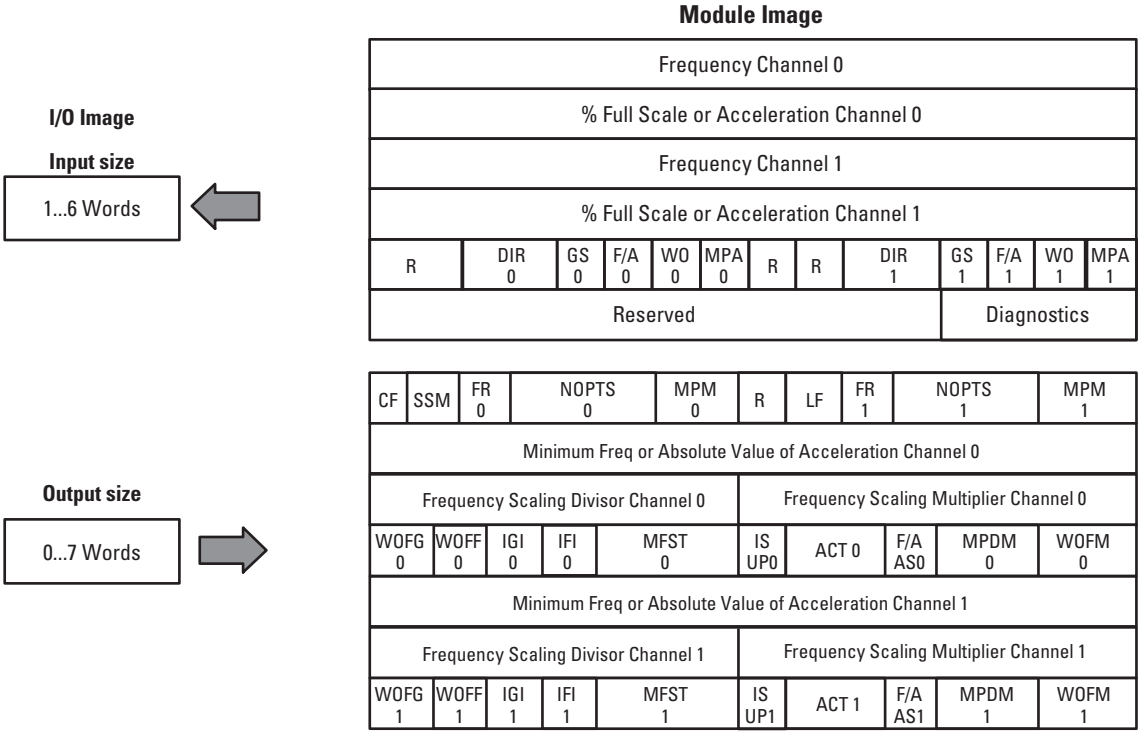

Block Transfer Read Word Assignments

(Octal Bit)	17	16	15	14	13	12	11	10	07	06	05	04	03	02	01	00
Decimal Bit	**15**	**14**	**13**	**12**	**11**	**10**	**09**	**08**	**07**	**06**	**05**	**04**	**03**	**02**	**01**	**00**
0	Frequency 0…32,767 or 0.0…3,276.7 Channel 0															
1	% Full Scale 0.0%…3,276.7% Channel 0 or Acceleration -32,768…+32,767 Channel 0															
2	Frequency 0…32,767 or 0.0…3,276.7 Channel 1															
3	% Full Scale 0.0%…3,276.7% Channel 1 or Acceleration -32,768…+32,767 Channel 1															

Block Transfer Read Word Assignments

(Octal Bit)	17	16	15	14	13	12	11	10	07	06	05	04	03	02	01	00
Decimal Bit	**15**	**14**	**13**	**12**	**11**	**10**	**09**	**08**	**07**	**06**	**05**	**04**	**03**	**02**	**01**	**00**
4	R	R	Direction Ch 0		GS Ch 0	F/A Ch 0	WO Ch 0	MPA Ch 0	R	R	Direction Ch 1		GS Ch 1	F/A Ch 1	WO Ch 1	MPA Ch 1
5	Reserved												Diagnostic Status			
Where:	R = Reserved GS = Gate state F/A = Frequency/Acceleration alarm WO = Wire-off alarm MPA = Missing pulse alarm															

Bit/Word Definitions for Block Transfer Read Words

Word	Bit	Definition
Read Word 0	Bit 00…15 (00…17)	Calculated value of frequency (channel 0) – frequency can be reported down to 1 or 1.0 Hz, depending on the Frequency Range bit setting: Below a 1 Hz value, 0 is reported Below a 1.0 Hz value, 0.0 is reported. Calculated frequency depends on Minimum Sampling Time and Missing Pulse Multiplier.
Word 1	Bit 00…15 (00…17)	% of Full Scale or Acceleration (channel 0) – Value of the calculated frequency scaled by the Maximum Frequency, or Calculated Value of Acceleration in Hz/s, depending on the state of the Frequency or Acceleration Alarm Select bit. **Note**: Percentage Full scale is calculated accurately up to a maximum of 3,276.7%. Beyond this maximum, the value of 3,276.7% will be returned, and a Calculation Failure (9) will be set in the Diagnostic Status byte.
Word 2	Bit 00…15 (00…17)	Calculated value of Frequency (channel 1) – Frequency can be reported down to 1 or 1.0 Hz, depending on the Frequency Range bit setting; below a 1 Hz value, 0 is reported; below a 1.0 Hz value, 0.0 is reported. Calculated frequency depends on Minimum Sampling Time and Missing Pulse Multiplier.
Word 3	Bit 00…15 (00…17)	Percentage of Full Scale or Acceleration (channel 1) – Value of the calculated Frequency scaled by the Maximum Frequency, or Calculated Value of Acceleration in Hz/s, depending on the state of the Frequency or Acceleration Alarm Select bit. Percentage full scale will be calculated accurately up to a maximum of 3,276.7%. Beyond this maximum, the value of 3,276.7% is returned, and a Calculation Failure (9) is set in the Diagnostic Status byte.

Bit/Word Definitions for Block Transfer Read Words

Word	Bit	Definition
Word 4	Bits 00	Missing Pulse Alarm (channel 1) – Indicates that no Frequency input pulse has occurred within the period determined by the Minimum Frequency Sampling Time and the Missing Pulse Multiplier. Primary control is given to the Missing Pulse Multiplier to determine when this bit is set. However, if the Missing Pulse Multiplier is set to 0, then the Minimum Frequency Sampling Time characteristics will determine when this bit is set.
	Bit 01	Wire Off Fault Alarm (channel 1) – when set, indicates that 24V DC Input (IEC 1+ or Switch Contact with shunt) Wire Off Detection has gone true for any of the Frequency or Gate inputs on a channel that has the Wire Off Fault Select = 1.
	Bit 02	Frequency or Acceleration Alarm (channel 1) – Changes state from 0…1 if the calculated Frequency (actual or scaled) exceeds the user programmed Maximum Frequency, or the absolute value of calculated Acceleration/Deceleration exceeds the user programmed Maximum Acceleration Value. The Frequency Alarm turns off when the Frequency drops below 95% of the Alarm Value. The Acceleration Alarm turns off when the Acceleration drops below 90% of the Alarm Value.
	Bit 03	Gate Input State (channel 1) – Indicates if there is a valid signal on the gate input. This parameter is only determined once every 0.5…2 s.
	Bits 04…05	Direction (channel 1) – Indicates the current Direction of Rotation, using both the Frequency and Gate inputs. (Frequency leads Gate = Clockwise; Gate leads Frequency = CounterClockwise). Used for slow speed detection from 1…1,500Hz. No or Stopped rotation can be determined by the state of the Missing Pulse Alarm, when it is switched on. A missing Frequency Input generates a Missing Pulse Alarm, a missing Gate Input only generates a **No Sensor Present/Detected** status (3).
	Bits 06…07	Not used
	Bits 08 (10)	Missing Pulse Alarm (channel 0) – Indicates that no frequency input pulse has occurred within the period determined by the Minimum Frequency Sampling Time and the Missing Pulse Multiplier. Primary control is given to the Missing Pulse Multiplier to determine when this bit is set. However, if the Missing Pulse Multiplier is set to 0, then the Minimum Frequency Sampling Time characteristics determines when this bit is set.
	Bit 09 (11)	Wire Off Fault Alarm (channel 0) – When set, indicates that 24V DC Input (IEC 1+ or Switch Contact with shunt) Wire Off Detection has gone true for any of the Frequency or Gate inputs on a channel that has the Wire Off Fault Select = 1.
	Bit 10 (12)	Frequency or Acceleration Alarm (channel 0) – Changes state from 0…1 if the calculated Frequency (actual or scaled) exceeds the user programmed Maximum Frequency, or the absolute value of calculated Acceleration/Deceleration exceeds the user programmed Maximum Acceleration Value. The Frequency Alarm turns off when the Frequency drops below 95% of the Alarm Value. The Acceleration Alarm turns off when the Acceleration drops below 90% of the Alarm Value.
	Bit 11 (13)	Gate Input State (channel 0) – Indicates if there is a valid signal on the gate input. This parameter is only determined once every 0.5…2 s.
	Bits 12…13 (14…15)	Direction (channel 0) – Indicates the current Direction of Rotation, using both the Frequency and Gate inputs. Frequency leads Gate = Clockwise Gate leads Frequency = CounterClockwise Used for slow speed detection from 1…1,500Hz. No or Stopped rotation can be determined by the state of the Missing Pulse Alarm, when it is switched on. A missing Frequency Input generates a Missing Pulse Alarm, a missing Gate Input only generates a **No Sensor Present/Detected** status (3).
	Bits 14…15 (16…17)	Not used

Bit/Word Definitions for Block Transfer Read Words

Word	Bit	Definition					
Word 5	Bits 00…03	Diagnostic Status – indicates the response from the module; a normal or non-normal operating condition.					
		Bit	03	02	01	00	
			0	0	0	0	0 = Normal Operation (No Failure)
			0	0	0	1	1 = Calibration Failure
			0	0	1	0	2 = Configuration Failure A Minimum Frequency Sample Time value other than 0…9 was selected.
			0	0	1	1	3 = Message Failure
			0	1	0	0	4 = Lead Break Detection Hardware Failure
			0	1	0	1	5 = Major Hardware Failure
			0	1	1	0	6 = EEPROM Failure
			0	1	1	1	7 = RAM Failure
			1	0	0	0	8 = ROM Failure
			1	0	0	1	9 = Calculation Failure The actual Frequency is greater than 32,767 Hz. or 3,276.7 Hz. (overange). The scaled Frequency is greater than 32,767 Hz. or 3,276.7 Hz. (overange). The % Full Scale calculation (based on Maximum Frequency) is > 3,276.7%.
			1010…1111				10…15 = Not Used
	Bits 04…15 (04…17)	Reserved					

Block Transfer Write Word Assignments

(Octal Bit)	17	16	15	14	13	12	11	10	07	06	05	04	03	02	01	00
Dec. Bit	**15**	**14**	**13**	**12**	**11**	**10**	**09**	**08**	**07**	**06**	**05**	**04**	**03**	**02**	**01**	**00**
0	CF	SSM	FR Ch 0	Number Of Pulses To Terminate Sampling Ch 0			MPM Ch 0		R	LF	FR Ch 1	Number Of Pulses To Terminate Sampling Ch 1			MPM Ch 1	
1	Maximum Frequency 0…32,767 or 0.0…3,276.7 or Absolute Value of Acceleration 0…32,767 – Channel 0															
2	Frequency Scaling Divisor 0…255 Ch 0								Frequency Scaling Multiplier 0…255 Ch 0							
3	WOFG Ch 0	WOFF Ch 0	IGI Ch 0	IFI Ch 0	Minimum Frequency Sample Time Ch 0				Init St Up Ch 0	ACT Ch 0		F/A AS Ch 0	MPDM Ch 0		WOFM Ch 0	
4	Maximum Frequency 0…32,767 or 0.0…3,276.7 or Absolute Value of Acceleration 0…32,767 – Channel 1															

Block Transfer Write Word Assignments

(Octal Bit)	17	16	15	14	13	12	11	10	07	06	05	04	03	02	01	00
Dec. Bit	**15**	**14**	**13**	**12**	**11**	**10**	**09**	**08**	**07**	**06**	**05**	**04**	**03**	**02**	**01**	**00**
5	Frequency Scaling Divisor 0…255 Ch 1								Frequency Scaling Multiplier 0…255 Ch 1							
6	WOFG Ch 1	WOFF Ch 1	IGI Ch 1	IFI Ch 1	Minimum Frequency Sample Time Ch 1				Init St Up Ch 1	ACT Ch 1		F/A AS Ch 1	MPDM Ch 1		WOFM Ch 1	

Where:
CF = Communication fault
SSM = Safe state mode
FR = Frequency Range
Ch = Channel
MPM = Missing Pulse Multiplier
R = Reserved
LF = Local fault mode
WOFF = Wire-off fault frequency
WOFG = Wire-off fault gate
IGI = Invert gate input
IFI = Invert frequency input
ACT = Acceleration Calculation Time
F/AAS = Frequency/Accel alarm select
MPDM = Missing pulse delay multiplier
WOFM = Wire-off fault mode

Bit/Word Definitions for the Block Transfer Write Words

Word	Bit	Definition
Write Word 0	Bits 00…01	Missing pulse multiplier bits (channel 1) – used to modify the Minimum Frequency Sampling Time to allow the frequency bandwidth to be more closely adjusted to the value needed to report the proper frequency and report a missing pulse more quickly. Default = No multiplier; alarm generated immediately

Bit	01	00	Missing Pulse Multiplier
	0	0	No Multiplier, normal mode with 2 s delay
	0	1	X2
	1	0	X8
	1	1	X32

Word	Bit	Definition
	Bits 02…04	Number of pulses to terminate sampling (channel 1) – Lets you calculate Frequency when a specified number of input pulses have occurred. This allows earlier reporting of the frequency than the Minimum Frequency Sampling Time, when many input pulses are occurring. Accurate frequency determination is possible without waiting for the full Minimum Frequency Sampling Time to expire. Default = Minimum frequency sampling time

Bit	04	03	02	Number of pulses to terminate sampling
	0	0	0	Use minimum frequency sampling time
	0	0	1	2
	0	1	0	4
	0	1	1	8
	1	0	0	16
	1	0	1	32
	1	1	0	64
	1	1	1	128

Bit/Word Definitions for the Block Transfer Write Words

Word	Bit	Definition
Word 0 (con't.)	Bits 05	Frequency range bits (channel 1) – Specifies the Frequency Range of the Frequency input. 0 = 1…32767 (below 1 Hz reports 0); 1 = 1.0…3276.7 (below 1.0 Hz reports 0.0). Default = 0
	Bits 06	Local fault mode selection – determines how the Module Safe State data is used to control alarm outputs for bus communication and internal module faults. Local Fault = Wire Off Fault or Missing Pulse Alarm. 0 = Safe states activated by bus communication only; 1 = Safe states activated by any failure (bus communication, internal module faults, and so on.) Default = 0, safe states activated by bus communication only
	Bits 07	Not used
	Bits 08…09 (10…11)	Missing pulse multiplier bits (channel 0) – used to modify the Minimum Frequency Sampling Time to allow the frequency bandwidth to be more closely adjusted to the value needed to report the proper frequency and report a missing pulse more quickly. Default = No multiplier; alarm generated immediately

Bit	09 (11)	08 (10)	Minimum frequency sampling time
	0	0	No Multiplier, alarm generated immediately (normal mode with 2 s delay)
	0	1	X2
	1	0	X8
	1	1	X32

Bits 10…12 (12…14)	Number of pulses to terminate sampling (channel 0) – Lets you calculate Frequency when a specified number of input pulses have occurred. This allows earlier reporting of the frequency than the Minimum Frequency Sampling Time, when many input pulses are occurring. Accurate frequency determination is possible without waiting for the full Minimum Frequency Sampling Time to expire. Default = Minimum frequency sampling time.	

Bit	12 (14)	11 (13)	10 (12)	Number of pulses to terminate sampling
	0	0	0	Use minimum frequency sampling time
	0	0	1	2
	0	1	0	4
	0	1	1	8
	1	0	0	16
	1	0	1	32
	1	1	0	64
	1	1	1	128

Bit/Word Definitions for the Block Transfer Write Words

Word	Bit	Definition
	Bit 13 (15)	Frequency range bits (channel 0) – Specifies the Frequency Range of the Frequency input. 0 = 1…32767 (below 1 Hz reports 0); 1 = 1.0…3276.7 (below 1.0 Hz reports 0.0). Default = 0
	Bit 14 (16)	Safe state mode bit – selection determines how module alarm outputs react to bus communication and internal module faults Local fault = Wire Off Fault or Missing Pulse Alarm 0 = Reset outputs 1 = Hold last state Default = 0 (reset outputs)
	Bit 15 (17)	Communication fault – Signals that communication has been interrupted on the network. The adapter signals that the module should execute its fault routine or go to the Safe State and control any Alarm Outputs accordingly. During normal startup, this bit must be set (1) by the user program to begin normal module operation of Alarm Outputs (in effect, an output enable). When the adapter communication link is broken, the adapter will reset this bit (0). Adapter dependent. Default = 0
Word 1	Bits 00…15 (00…17)	Maximum frequency or absolute value acceleration/deceleration (channel 0) – Specifies the highest Frequency or absolute Acceleration/Deceleration value allowed on the Frequency input. 0…32,767, 0.0…3,276.7 Hz. or 0…32,767 Hz/s depending on the Frequency Range and Frequency/Acceleration Alarm Select bits.
Word 2	Bits 00…07	Frequency scaling multiplier (channel 0) – Specifies a multiplier to scale the incoming Frequency value, 0…255. Default = 0 – no scaling multiplication performed (x1)
	Bits 08…15 (10…17)	Frequency scaling divisor (channel 0) – Specifies divisor to scale the incoming Frequency value, 0…255. Default = 0 – no scaling division performed (divided by 1)

Bit/Word Definitions for the Block Transfer Write Words

Word	Bit	Definition			
Word 3	Bits 00…01	Wire-Off/Missing Pulse fault select mode (channel 0) – Sets the mode for 24V DC IEC 1+ Wire Off Input Detection and Missing Pulse Detection result for any input (Frequency or Gate). The Maximum Frequency is determined by Frequency Range bit and the Maximum Frequency value, and the Minimum Frequency is determined by Frequency Range bit. The Wire Off detect time (in mode 1, 2, & 3) is 2 seconds maximum.			
		Bit	01	00	Channel wire-off/missing pulse detection mode
			0	0	Disabled
			0	1	Alarm only (frequency unchanged)
			1	0	Alarm and force frequency to maximum frequency value (32767 or 3276.7 or maximum frequency value, 0).
			1	1	Alarm and force frequency to minimum frequency value (0 or 0.0).
	Bits 02…03	Missing pulse delay multiplier bits (channel 0) – Specifies the number of Missing Pulse Alarms periods (Minimum Frequency Sampling Times) which is permitted before the alarm is raised, if enabled. Used to defeat the Missing Pulse Alarm during a system startup. Default = 0 – No multiplier; alarm generated immediately (normal mode with 2 s extension delay)			
		Bit	03	02	Alarm periods before alarm generated
			0	0	No multiplier; alarm generated immediately (normal mode with 2 s extension delay)
			0	1	2 sample periods + 2 s delay before alarm
			1	0	8 sample periods + 2 s delay before alarm
			1	1	32 sample periods + 2 s delay before alarm
	Bit 04	Frequency or Acceleration Alarm Select (channel 0) – Determines if the value in the Maximum Frequency or Acceleration write word is a Frequency (actual or scaled) or Acceleration Alarm value. If set to Frequency, Acceleration is not calculated. 0 = Frequency alarm 1 = Acceleration alarm Default = 0 – frequency alarm			
	Bits 05…06	Acceleration Calculation Time (channel 0) – Specifies the number of Frequency Sample Times over which the module calculates acceleration. Default = 0 – Rolling Average (previous 4 samples)			
		Bit	06	05	Acceleration Calculation Time in Frequency Sample Times
			0	0	Rolling Average (previous 4 samples)
			0	1	8
			1	0	16
			1	1	32
	Bit 07	Initiate Startup Select (channel 0) – Alerts a channel that if process start up is in progress to defeat the missing pulse alarm for a time determined by the missing pulse delay multiplier. 0 = Normal Run Mode; 1 = Startup Mode – defeat/delay Missing Pulse Alarm Default = 0 – Normal Run Mode			

Bit/Word Definitions for the Block Transfer Write Words

Word	Bit	Definition					
Word 3	Bit 07	Minimum Frequency Sampling Time (channel 0) – Specifies the minimum time (in ms) the module spends collecting pulses to determine the Frequency.					
	Bits 08…11 (10…13)	Bit	11 (13)	10 (12)	09 (11)	08 (10)	Minimum Frequency Sampling Time (in ms)
			0	0	0	0	2
			0	0	0	1	4
			0	0	1	0	5
			0	0	1	1	10
			0	1	0	0	20
			0	1	0	1	50
			0	1	1	0	100
			0	1	1	1	200
			1	0	0	0	500
			1	0	0	1	1000
			1010…1111 not used – 2 ms default sample time used				
	Bit 12 (14)	Invert Select – Frequency Input (channel 0) – Selects whether to invert the Frequency input signal, if not using an Active High (24V = On) 24V DC IEC 1+ sensor or Normally Open relay or switch contact on the 24V DC Frequency Input terminal. Allows compatibility with an Active Low (0V = On) 24V DC IEC 1+ sensor or Normally Closed relay contact on the 24V DC Frequency Input terminal. 0 = Normal (Active High, 24V = On), 1 = Invert input (Active Low, 0V = On). Default = 0 – Normal (Active High, 24V = On)					
	Bit 13 (15)	Invert Select – Gate Input (channel 0) – Selects whether to invert the Gate input signal, if not using an Active High (24V = On) 24V DC IEC 1+ sensor or Normally Open relay or switch contact on the 24V DC Gate Input terminal. Allows compatibility with an Active Low (0V = On) 24V DC IEC 1+ sensor or Normally Closed relay contact on the 24V DC Gate Input terminal. 0 = Normal (Active High, 24V = On), 1 = Invert input (Active Low, 0V = On) Default = 0 – Normal (Active High, 24V = On)					
	Bit 14 (16)	Wire Off Fault Select – Frequency Input (channel 0) – Selects whether to turn On or Off the 24V DC Frequency input IEC 1+ hardware Wire Off (Lead Breakage) detection. 0 = Disable, 1 = Enable Default: = 0 – Disable **Note**: Customer devices must draw more than 0.4 mA in the On and Off State. To use this feature with relays or switches, connect a shunt resistor (~ 50K) across the contacts.					
	Bit 15 (17)	Wire Off Fault Select – Gate Input (channel 0) – Selects whether to turn On or Off the 24V DC Gate input IEC 1+ hardware Wire Off (Lead Breakage) detection. 0 = Disable, 1 = Enable Default = 0 – Disable **Note**: Customer devices must draw more than.4 mA in the On and Off State. To use this feature with relays or switches, connect a shunt resistor (~ 50K) across the contacts.					

Bit/Word Definitions for the Block Transfer Write Words

Word	Bit	Definition
Word 4	Bits 00…15 (00…17)	Maximum frequency or absolute value acceleration/deceleration (channel 1) – Specifies the highest Frequency or absolute Acceleration/Deceleration value allowed on the Frequency input. 0…32,767 Hz, 0.0…3,276.7 Hz. or 0…32,767 Hz/s depending on the Frequency Range and Frequency/Acceleration Alarm Select bits.
Word 5	Bits 00…07	Frequency scaling multiplier (channel 1) – Specifies a multiplier to scale the incoming Frequency value, 0…255. Default = 0 – no scaling multiplication performed (x1)
	Bits 08…15 (10…17)	Frequency scaling divisor (channel 1) – Specifies divisor to scale the incoming Frequency value, 0…255. Default = 0 – no scaling division performed (divided by 1)

Bit/Word Definitions for the Block Transfer Write Words

Word	Bit	Definition			
Word 6	Bits 00…01	Wire-Off/Missing Pulse fault select (channel 1) – Sets the mode for 24V DC IEC 1+ Wire Off Input Detection and Missing Pulse Detection result for any input (Frequency or Gate). The Maximum Frequency is determined by Frequency Range bit and the Maximum Frequency value, and the Minimum Frequency is determined by Frequency Range bit. The Wire Off detect time (in mode 1, 2, and 3) is 2 seconds maximum.			
		Bit	01	00	Channel wire-off or missing pulse fault mode
			0	0	Disabled
			0	1	Alarm only (frequency unchanged)
			1	0	Alarm and force frequency to maximum frequency value (32767 or 3276.7 or maximum frequency value, 0).
			1	1	Alarm and force frequency to minimum frequency value (0 or 0.0).
	Bits 02…03	Missing pulse delay multiplier bits (channel 1) – Specifies the number of Missing Pulse Alarms periods (Minimum Frequency Sampling Times) which will be tolerated before the alarm is actually generated, if enabled. (Used to defeat the Missing Pulse Alarm during a system startup.) Default = 0 – No multiplier; alarm generated immediately (normal mode with 2 s extension delay)			
		Bit	03	02	Alarm periods before alarm generated
			0	0	No multiplier; alarm generated immediately (normal mode with 2 s extension delay)
			0	1	2 sample periods + 2 s delay before alarm
			1	0	8 sample periods + 2 s delay before alarm
			1	1	32 sample periods + 2 s delay before alarm
	Bit 04	Frequency or Acceleration Alarm Select (channel 1) – Determines if the value in the Maximum Frequency or Acceleration write word is a Frequency (actual or scaled) or Acceleration Alarm value. If set to Frequency, Acceleration is not calculated. 0 = Frequency alarm 1 = Acceleration alarm Default = 0 – frequency alarm			
	Bits 05…06	Acceleration Calculation Time (channel 1) – Specifies the number of Frequency Sample Times over which the module calculates acceleration. Default = 0 – Rolling Average (previous 4 samples)			
		Bit	06	05	Acceleration Calculation Time in Frequency Sample Times
			0	0	Rolling Average (previous 4 samples)
			0	1	8
			1	0	16
			1	1	32

Bit/Word Definitions for the Block Transfer Write Words

Word	Bit	Definition
Word 6	Bit 07	Initiate Startup Select (channel 1) – Alerts a channel that if process startup is in progress to defeat the missing pulse alarm for a time determined by the missing pulse delay multiplier. 0 = Normal run mode, 1 = Startup Mode – Defeat/delay Missing Pulse Alarm Default = 0 – Normal run mode
	Bits 08…11 (10…13)	Minimum Frequency Sampling Time (channel 1) – Specifies the minimum time (in ms) the module will spend collecting pulses to determine the Frequency.

Bit	11	10	09	08	Minimum Frequency Sampling Time (in ms)
	0	0	0	0	2
	0	0	0	1	4
	0	0	1	0	5
	0	0	1	1	10
	0	1	0	0	20
	0	1	0	1	50
	0	1	1	0	100
	0	1	1	1	200
	1	0	0	0	500
	1	0	0	1	1000
1010…1111 not used – 2 ms default sample time used					

	Bit 12 (14)	Invert Select – Frequency Input (channel 1) – Selects whether to invert the Frequency input signal, if not using an Active High (24V = On) 24V DC IEC 1+ sensor or Normally Open relay or switch contact on the 24V DC Frequency Input terminal. Allows compatibility with an Active Low (0V = On) 24V DC IEC 1+ sensor or Normally Closed relay contact on the 24V DC Frequency Input terminal. 0 = Normal (Active High, 24V = On), 1 = Invert input (Active Low, 0V = On). Default = 0 – Normal (Active High, 24V = On)

Bit/Word Definitions for the Block Transfer Write Words

Word	Bit	Definition
Word 6	Bit 13 (15)	Invert Select – Gate Input (channel 1) – Selects whether to invert the Gate input signal, if not using an Active High (24V = On) 24V DC IEC 1+ sensor or "Normally Open" relay or switch contact on the 24V DC Gate Input terminal. Allows compatibility with an Active Low (0V = On) 24 V DC IEC 1+ sensor or "Normally Closed" relay contact on the 24V DC Gate Input terminal. 0 = Normal (Active High, 24V = On), 1 = Invert input (Active Low, 0V = On) Default = 0 – Normal (Active High, 24V = On)
	Bit 14 (16)	Wire Off Fault Select – Frequency Input (channel 1) – Selects whether to turn On or Off the 24V DC Frequency input IEC 1+ hardware Wire Off (Lead Breakage) detection. 0 = Disable, 1 = Enable Default: = 0 – Disable **Note**: Customer devices must draw more than 0.4 mA in the On and Off State. To use this feature with relays or switches, connect a shunt resistor (~ 50K) across the contacts.
	Bit 15 (17)	Wire Off Fault Select – Gate Input (channel 1) – Selects whether to power On or Off the 24V DC Gate input IEC 1+ hardware Wire Off (Lead Breakage) detection. 0 = Disable, 1 = Enable Default = 0 – Disable **Note**: Customer devices must draw more than 4 mA in the On and Off State. To use this feature with relays or switches, connect a shunt resistor (~ 50K) across the contacts.

Input Map

Bit	15	14	13	12	11	10	09	08	07	06	05	04	03	02	01	00
Word	**Read**															
0	Frequency 0…32,767 or 0.0…3,276.7 Channel 0															
1	% Full Scale 0.0…3,276.7% Channel 0 or Acceleration -32,768…32,767 Channel 0															
2	Frequency 0…32,767 or 0.0…3,276.7 Channel 1															
3	% Full Scale 0.0…3,276.7% Channel 1 or Acceleration -32,768…32,767 Channel 1															
4	R	R	Direction Ch 0		GS Ch 0	F/A Ch 0	WO Ch 0	MPA Ch 0	R	R	Direction Ch 1		GS Ch 1	F/A Ch 1	WO Ch 1	MPA Ch 1
5	Reserved				Diagnostic Status Channel 0				Reserved				Diagnostic Status Channel 1			
6	Reserved															

Where:
R = Reserved
GS = Gate state
F/A = Frequency/Acceleration alarm
WO = Wire-off alarm
MPA = Missing pulse alarm

Output Map

Dec	**15**	**14**	**13**	**12**	**11**	**10**	**09**	**08**	**07**	**06**	**05**	**04**	**03**	**02**	**01**	**00**
Oct	**17**	**16**	**15**	**14**	**13**	**12**	**11**	**10**	**07**	**06**	**05**	**04**	**03**	**02**	**01**	**00**
0	CF	SSM	FR Ch0	Number of pulses to terminate sampling 0…7 Ch 0			MPM 0…3 Ch 0		R	LF	FR Ch 1	Number of pulses to terminate sampling 0…7 Ch 1			MPM 0…3 Ch 1	
1	Maximum Frequency 0…32.767 or 0.0…3,276.7 - or - Absolute Value of Acceleration - 0…32767 Channel 0															
2	Frequency Scaling Divisor 0…255 Channel 0								Frequency Scaling Multiplier 0…255 Channel 0							
3	WOFG Ch0	WOFF Ch0	IGI Ch0	IFI Ch0	Minimum Frequency Sample Time 0…15 Ch 0				Init St Up Ch 0	ACT 0…3 Ch 0		F/AA S Ch0	MPDM 0…3 Ch 0		WOFM 0…3 Ch0	
4	Maximum Frequency 0…32,767 or 0.0…3,276.7 - or - Absolute Value of Acceleration – 0…32,767 Channel 1															
5	Frequency Scaling Divisor 0…255 Channel 1								Frequency Scaling Multiplier 0…255 Channel 1							
6	WOFG Ch1	WOFF Ch1	IGI Ch 1	IFI Ch 1	Minimum Frequency Sample Time 0…15 Ch 1				Init St Up Ch 1	ACT 0…3 Ch 1		F/AAS Ch 1	MPDM 0…3 Ch 1		WOFM 0…3 Ch 1	
7	Reserved															
Where:	CF = Communication fault SSM = Safe state mode FR = Frequency range R = Reserved MPM = Missing pulse multiplier LF = Local Fault mode F/AAS = Frequency/Accel alarm select								WOFF = Wire-off fault frequency WOFG = Wire-off fault gate WOFM = Wire-off fault mode IGI = Invert gate input IFI = Invert frequency input ACT = Acceleration calculation time MPDM = Missing pulse delay multiplier							

Chapter Summary

This chapter provided the user with data and instructions to configure and map FLEX I/O Frequency Input module data.

Notes:

Troubleshoot the Module

Overview

This chapter provides a description of the different status indicators for the frequency input module to help you troubleshoot.

Topic	Page
Status Indicators	35
Diagnostics	36
Diagnostic Bits in Word 5 of the BTR File	37

Status Indicators

The module has indicators for the following:

- Frequency and Gate Inputs
- Frequency and Gate Wire-Off Faults
- Alarm Outputs

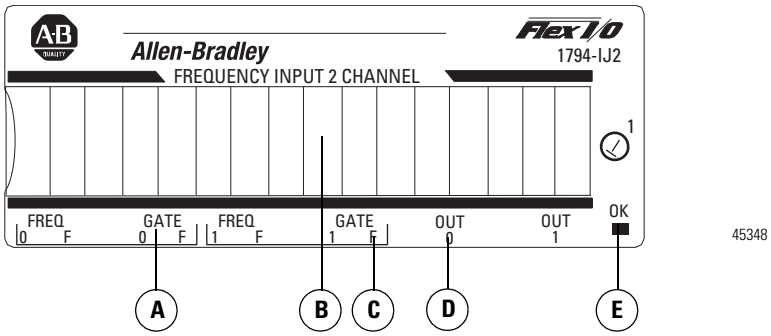

A = Input indicator
B = Insertable label for writing individual I/O assignments
C = Wire-off fault indicator
D = Output indicator
E = Power/status indicator – indicates power applied to module and status of module

When an input indicator (yellow) is lighted, it indicates that a valid signal (active high or active low) is present at one of the input terminals.

When wire-off detection is enabled, and a wire-off fault is detected (24V DC IEC 1+ input terminal only), a fault indicator (red) flashes at a rate of 1 Hz to signal a fault condition. A wire-off fault signal is also sent to the backplane. A flashing red fault indication means a valid wire-off condition for a 24V DC IEC 1+ Input or a 24V DC contact switch input with a shunt resistor.

When an output indicator is yellow, the logic is driving an output alarm On. After detecting a fault, the internal circuitry sets the output data to the appropriate safe state, as defined by the module data table. Safe state control may be adapter-dependent.

The input and output indicators are on the field side of the isolation path, and display the logic state of the actual microcontroller input and output.

The status indicator initially powers up as solid green, indicating the power supply is operating and internal diagnostic tests are being performed. After a successful power up test, the indicator remains green. The indicator turns red in about 1.5 s if there is an internal diagnostics error.

The module is operating correctly when the green OK indicator is on.

A red OK indicator shows that the module is in a Faulted condition, indicating an internal error.

Indicator	Condition	Operating Description
Input (0, 1)	Off (Dark)	Input Turned Off, Input Not Used, or Wire Disconnected
(Freq. or Gate)	On (Yellow)	Input Turned On (Active High or Active Low if Inverted)
Fault (F)	Off (Dark)	Wire connected, normal operation or detection disabled
(Freq. or Gate)	On (Red Flashing)	Wire disconnected, fault condition (for IEC1 + Proximity switch or switch contacts with shunt resistor)
Output Alarm (0, 1)	Off (Dark)	Output alarm turned off
	On (Yellow)	Output alarm turned on (Logic Drive On)
Status (OK)	Off (Dark)	24V Power Turned Off, or 5V Logic Power Problem
	Solid Green	Module OK, Normal Operating Mode
	Solid Red	Module Fault, Outputs Disabled

Diagnostics

The frequency input module returns diagnostics to the PLC processor in Word 5 of the BTR file. These diagnostics give you information on the status or condition of the module.

Diagnostic Bits in Word 5 of the BTR File

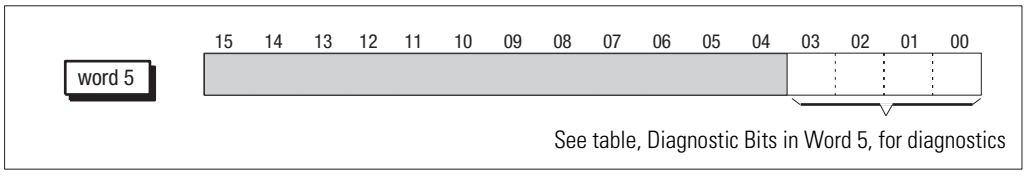

Diagnostic Bits in Word 5

Word 5	Bits 00…03	Diagnostic Status – indicates the response from the module; a normal or non-normal operating condition.					
		Bit	03	02	01	00	Decimal equivalent and condition
			0	0	0	0	0 = Normal operation (no failure)
			0	0	0	1	1 = Calibration failure
			0	0	1	0	2 = Configuration failure – a Minimum Frequency Sample Time value other than 0…9 was selected
			0	0	1	1	3 = Message failure
			0	1	0	0	4 = Lead break detection hardware failure
			0	1	0	1	5 = Major hardware failure
			0	1	1	0	6 = EEPROM failure
			0	1	1	1	7 = RAM failure
			1	0	0	0	8 = ROM failure
			1	0	0	1	9 = Calculation failure The actual frequency is greater than 32,767 Hz or 3,276.7 Hz (overrange). The scaled Frequency is greater than 32,767 Hz or 3,276.7 Hz (overrange). The % Full Scale calculation (based on Maximum Frequency) is > 3,276.7%.
			1010…1111				10…15 = Not used

Chapter Summary

This chapter explained how to interpret the status indicators of the frequency input module and the internal diagnostics that indicates the condition of the module.

Notes:

Specifications

What This Appendix Contains

This appendix contains the frequency accuracy and general specifications of the Frequency Input module (1794-IJ2, 1794-IJ2K, and 1794-IJ2XT).

Input Specifications

Attribute	Value
Number of input channels	2
Number of inputs per channel	2 – Frequency and Gate (gate used to establish direction)
Input frequency, max	32 kHz
Frequency value, max	32,767 Hz or 3,276.7 Hz (dependent on range)
Input pulse width	20 µs
Resolution and accuracy	See table, Resolution and Accuracy, on page 24
On-state voltage, min	10V (24V IEC+1 proximity, encoder input or switch inputs)
On-state voltage, nom (selected by terminal base connections)	50 mV AC, 28V AC peak – Extended magnetic pickup 500 mV AC, 28V AC peak – Magnetic pickup < 3V – Vortex flowmeter low range > 6V – Vortex flowmeter high range 24V DC IEC+1 proximity or encoder input 24V DC Contact switch input
On-state voltage, max	Limited to isolated 24V DC power supply
On-state current min nom max	 2.0 mA 9.0 mA 10.0 mA
Off-state current	<1.5mA into 24V DC IEC+ terminal
Off-state voltage, max	5.0V DC on 24V DC IEC+1 terminal
Wire-off detection	0.4 mA for proximity, encoder or contact switch with 50 kΩ shunt resistor
Frequency input impedance	>5 KΩ for 50 mV Extended magnetic pickup >5 KΩ for 500 mV Magnetic pickup >10 KΩ for 3V Vortex flowmeter low range >10 KΩ for 6V Vortex flowmeter high range >2.5 KΩ for 24V DC IEC+1 proximity or encoder input >2.5 KΩ for 24V DC Contact switch input
Gate input impedance	>5 KΩ for 50 mV Extended magnetic pickup >5 KΩ for 500 mV Magnetic pickup >2.5 KΩ for 24V DC IEC+1 proximity or encoder input >2.5 KΩ for 24V DC Contact switch input

Output Specifications[1]

Attribute	Value
Number of outputs	2 – isolated
Output voltage source	Customer supplied
Output voltage min nom max	 10V DC 24V DC 31.2V DC
On-state current, min	1 mA per output
On-state current, max	1.0 A per channel sourced out of module Current Limited – All outputs can be On simultaneously without derating
Surge current	2 A for 50 ms, repeatable every 2 s
Off-state leakage, max	Less than 300 μA @ 31.2V DC
On-state voltage drop	0.9V DC @ 1 A
Output control	Outputs individually assignable to: Frequency, % Full scale or acceleration alarm
Output switching time	Triggered by frequency alarm or acceleration alarm Turn on: Less than 0.5 ms Turn off: Less than 1 ms

(1) Meets IEC 1A 24V DC output specifications.

General Specifications

Attribute	Value
Module location	Cat. No. 1794-TB3G and 1794-TB3GS terminal base units
External DC power Voltage range Supply voltage, nom Supply current	(Input for +5V logic and 24V DC/DC converters) 19.2…31.2V DC (includes 5% AC ripple) 24V DC 220 mA @ 19.2V DC 180 mA @ 24V DC 140 mA @ 31.2V DC
Isolated DC power Voltage range Supply voltage, nom Supply current, max Peak AC ripple, max	(Output to sensors and encoders) 21.6…26.4V DC 24V DC 0…60 mA @ 24V DC (4 devices @ 15 mA = 60 mA) 100 mV
Dimensions (with module installed in base) HxWxD	94 x 94 x 69 mm (3.7 x 3.7 x 2.7 in.)
Isolation voltage	50V (continuous), Basic Insulation Type Type tested @ 1365V AC for 60 s, between field side and system and individual channels
Processing time	<4 ms
FlexBus current	30 mA @ 5V DC

General Specifications

Attribute	Value
Power dissipation, max	4.6W @ 31.2V DC
Thermal dissipation, max	15.6 BTU/hr @ 31.2V DC
Indicators (field side driven, logic side indication)	1 green/red power/status indicator 4 yellow status indicators (Freq 0, 1, Gate 0, 1) 4 red wire-off indicators (Freq 0, 1, Gate 0, 1) 2 yellow status indicators (Out 0, Out 1) – logic side
Keyswitch position	1
Wire size	Determined by installed terminal base
Wiring category[1]	2 – on signal ports 3 – on power ports
Wire type	Shielded on signal ports
Terminal screw torque	Determined by installed terminal base
Enclosure type rating	None (open-style)
North American temp code	T4A
IEC temp code	T4

(1) Use this Conductor Category information for planning conductor routing. Refer to Industrial Automation Wiring and Grounding Guidelines, publication 1770-4.1.

Environmental Specifications

Attribute	Value
Temperature, operating	IEC 60068-2-1 (Test Ad, Operating Cold), IEC 60068-2-2 (Test Bd, Operating Dry Heat), IEC 60068-2-14 (Test Nb, Operating Thermal Shock): 0…55 °C (32…131 °F) – **1794-IJ2 and 1794-IJ2K** -20…70 °C (-4…158 °F) – **1794-IJ2XT**
Temperature, non-operating	IEC 60068-2-1 (Test Ab, Unpackaged Non-operating Cold), IEC 60068-2-2 (Test Bb, Unpackaged Non-operating Dry Heat), IEC 60068-2-14 (Test Na, Unpackaged Non-operating Thermal Shock): -40…85 °C (-40…185 °F)
Relative humidity	IEC 60068-2-30 (Test Db, Unpackaged Damp Heat): 5…95% noncondensing
Vibration	IEC 60068-2-6 (Test Fc, Operating): 5 g @ 10…500 Hz
Shock, operating	IEC 60068-2-27 (Test Ea, Unpackaged Shock): 30 g
Shock, non-operating	IEC 60068-2-27 (Test Ea, Unpackaged Shock): 50 g
Emissions	CISPR 11: Group 1, Class A (with appropriate enclosure)

Environmental Specifications

Attribute	Value
ESD immunity	IEC 61000-4-2: 4 kV contact discharges – **1794-IJ2 and 1794-IJ2K** 6 kV contact discharges – **1794-IJ2XT** 8 kV air discharges
EFT/B immunity	IEC 61000-4-4: ±2 kV @ 5 kHz on power ports ±2 kV @ 5 kHz on shielded signal ports
Surge transient immunity	IEC 61000-4-5: ±2 kV line-earth(CM) on shielded signal ports
Conducted RF immunity	IEC 61000-4-6: 10V rms with 1 kHz sine-wave 80% AM from 150 kHz…80 MHz on shielded signal ports

Certifications

Certifications when product is marked[1]	Value
c-UL-us	UL Listed Industrial Control Equipment, certified for US and Canada. See UL File E65584. UL Listed for Class I, Division 2 Group A,B,C,D Hazardous Locations, certified for U.S. and Canada. See UL File E194810.
CSA (1794-IJ2, 1794-IJ2K)	CSA Certified Process Control Equipment. See CSA File LR54689C. CSA Certified Process Control Equipment for Class I, Division 2 Group A,B,C,D Hazardous Locations. See CSA File LR69960C.
CE	European Union 2004/108/EC EMC Directive, compliant with: EN 61326-1; Meas./Control/Lab., Industrial Requirements EN 61000-6-2; Industrial Immunity EN 61000-6-4; Industrial Emissions EN 61131-2; Programmable Controllers (Clause 8, Zone A & B)
C-Tick	Australian Radiocommunications Act, compliant with: AS/NZS CISPR 11; Industrial Emissions
Ex	European Union 94/9/EC ATEX Directive, compliant with: EN 60079-15; Potentially Explosive Atmospheres, Protection "n" (II 3 G Ex nA IIC T4 X) EN 60079-0; General Requirements (Zone 2)
TÜV	TÜV Certified for Functional Safety: up to and including SIL 2

(1) See the Product Certification link at http://www.ab.com for Declaration of Conformity, Certificates, and other certification details.

Electronic Data Sheet (EDS) Files

Overview

EDS provides the definition for a device's configurable parameters and public interfaces to those parameters:

- Every type of configurable device has its own unique EDS.
- EDS is a simple text file that allows product-specific information to be made available to third-party vendors.

This makes updating of configuration tools easier without having to constantly revise the configuration software tool.

Beginning with the following revisions, EDS files are required for RSNetworx for Devicenet and ControlNet, RSLinx, RSLogix5, and RSLogix 5000 to recognize a device:

RSNetworx	Version 2.21
RSLinx	Version 1.10.176
RSLogix 5	Version 4.0
RSLogix 5000	Version 5.12

Updating EDS File

Most EDS files are installed with RSLinx, RSNetworx, and other RSI software as long as you enable the option during installation.

There are instances where you will need to acquire and register EDS files on your own even after all software is installed.

- If you go online with RSNetworx and it shows a device with a "?" mark icon, a globe, or a message that says the device is unrecognized, this means the EDS file for that device **does not** exist on your PC.
- If RSLinx can see a processor but going online, uploading or downloading is **not** possible.

With ControlLogix modules the backplane **does not** show after expanding the tree or ControlLogix modules in the backplane show up as a yellow question mark without a red X sign.

An EDS file is also required if a bridge module such as a 1756-CNB or DNB **does not** show the "+" sign to expand the tree to show its network.

To acquire EDS files for Rockwell Automation and Allen-Bradley devices, go to Tools & Resources EDS Files at www.ab.com/networks/eds. It allows you to search for devices by the type of network and their catalog number.

ATTENTION

- Make sure to match the major firmware revision of the device as each major firmware revision is associated with a specific EDS file.
- Download the EDS file and place it in any folder, except the /Program Files/Rockwell Software/RSCommon/EDS folder where your Rockwell Automation software is installed.
- Register EDS files with RSNetworx by selecting Tools EDS Wizard.
- Select Register an EDS File, then click the Browse button on the Next page to find your file.

EDS Installation

You can register EDS files with the EDS Hardware Installation tool.

1. In Windows, go to Rockwell Software → RSLinx Tools →EDS Hardware Installation Tool.

2. Click Add to register an EDS file.

   When an EDS file is registered, a copy of the file is made and placed in the /RSCommon/EDS folder where your Rockwell Automation software is installed and your Windows registry is updated. Once the registration is complete you can move, copy, or delete the original files.

Schematics

What This Appendix Contains

Use this appendix to understand the internal logic of the FLEX I/O Frequency Input module.

Follow the wiring practices described in Industrial Automation Wiring and Grounding Guidelines for Noise Immunity, publication 1770-4.1, when wiring your I/O devices. This includes:

- routing conductors
- grounding practices
- use of shielded cables
- input circuits

The frequency input module input logic consists of:

- frequency input circuits
- gate input circuits
- Frequency Inputs

The frequency input circuit uses a comparator to determine when the input voltage threshold is exceeded. When exceeded, it provides logic pulses internal to the 1794 Frequency Input module. The circuit is designed to interface with both active or passive sensor inputs by accepting any pulse output device (such as vortex flowmeter, magnetic pickup or digital pickup).

Gate Inputs

Gate inputs are similar to frequency inputs and are used for determining direction. There is one gate associated with each frequency input circuit (G0 corresponds to F0). The circuit is designed to interface with both active or passive sensor inputs by accepting any pulse output device (such as magnetic pickup or digital pickup).

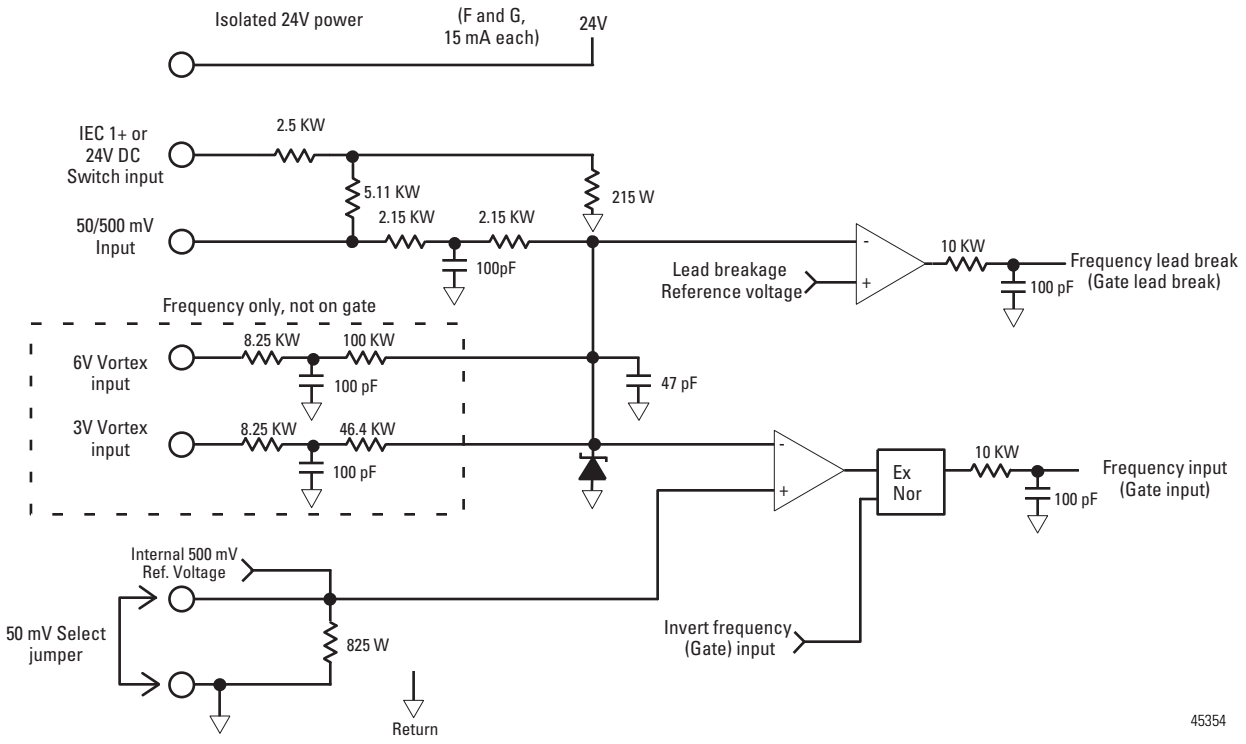

Output Circuits

The Frequency Input module output logic consists of digital outputs.

Digital Outputs

The module output is comprised of an isolated power MOSFET. This device operates in current sourcing mode, and is capable of delivering up to 1 A @ 10…31.2V DC.

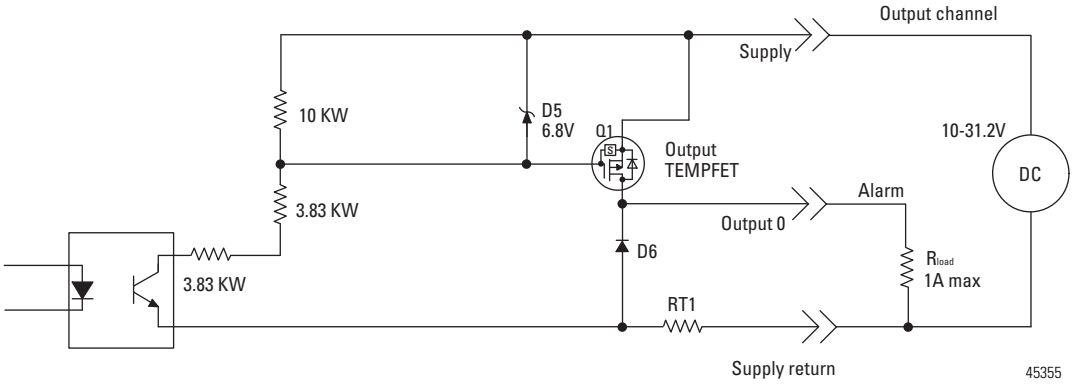

Customer supplied power, ranging from 10V…31.2V DC, is connected internally to the power output transistor. When an output is turned on, current flows into the source, out of the drain, through the load connected to the ground of the customer supply (customer return). Diode D6 protects the power output transistors from damage due to inductive loads.

Output Q1 is a thermally protected FET and will turn off @ 3A, approximately. After an output goes into thermal shutdown, you must fix the cause of the shutdown and toggle the outputs ON and OFF to reenergize the output.

RT1 protects D6 and Q1 if power supply polarity is reversed.

DC to DC Converters – 24V DC Power Supplies

The module provides two 24V (±10%) power sources rated at 15 mA each. Each power source can power one Bently Nevada 3300 – 5 mm (0.197 in.) or 8 mm (0.315 in.) – Proximity Transducer.

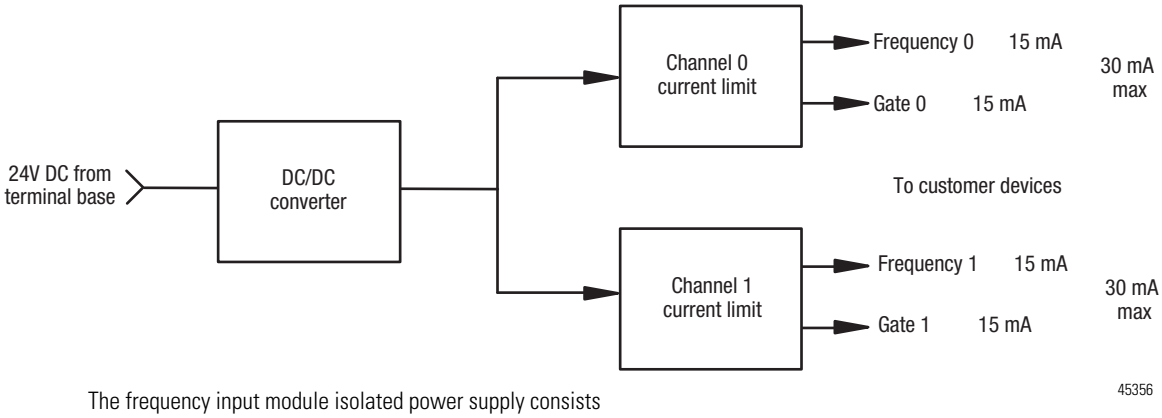

The frequency input module isolated power supply consists of 1 isolated 24V DC power supply that provides 2 current limited outputs of 30 mA max (1 for each channel).

Notes:

Program Your Module with PLC Processors

Overview

This Appendix serves as a reference to users of the PLC-* Family Processors to program their modules.

To initiate communication between the frequency input module and your PLC processor, you must enter block transfer instructions into your ladder logic program. Use this chapter to enter the necessary block transfer instructions into your ladder logic program.

Enter Block Transfer Instructions

The frequency input module communicates with the PLC processor through bidirectional block transfers. This is the sequential operation of both read and write block transfer instructions.

Before you configure the module, you need to enter block transfer instructions into your ladder logic. The following example programs illustrate the minimum programming required for communication to take place between the module and a PLC processor. These programs can be modified to suit your application requirements.

A configuration block transfer write (BTW) is initiated when the frequency module is first powered up, and subsequently only when the programmer wants to enable or disable features of the module. The configuration BTW sets the bits which enable the programmable features of the module, such as scalars and alarm values, and so on. Block transfer reads are performed to retrieve information from the module.

Block transfer read (BTR) programming moves status and data from the module to the processor data table. The processor user program initiates the request to transfer data from the module to the processor. The transferred words contain module status, channel status and input data from the module.

Your program should monitor status bits, block transfer read and block transfer write activity.

PLC-2 Family Processor

The 1794 Frequency I/O module is not recommended for use with PLC-2 family programmable controllers due to the number of digits needed for high resolution.

IMPORTANT The frequency input module functions with reduced performance in PLC-2 systems. Because the module does not support BCD and the PLC-2 processor is limited to values of 4095 (12 bit binary), many values returned in the BTR file may not provide meaningful data to the PLC-2 processor.

PLC-3 Family Processor

Block transfer instructions with the PLC-3 processor use a control file and a data file. The block transfer control file contains the data table section for module location, the address of the block transfer data file and other related data. The block transfer data file stores data that you want transferred to the module (when programming a BTW) or from the module (when programming a BTR).

The programming terminal prompts you to create a control file when a block transfer instruction is being programmed. The same block transfer control file is used for both the read and write instructions for your module. A different block transfer control file is required for every module.

PLC-3 Processor Program Example

Rung M:0

The IJ2 module is located in rack 3, I/O group 2, slot 0. The control file is a 10 word file starting at B17:0 that is shared by the BTR/BTW. The data obtained by the PLC3 processor is placed in memory starting at location N18:101, and with the default length of 0, is 7 words long.

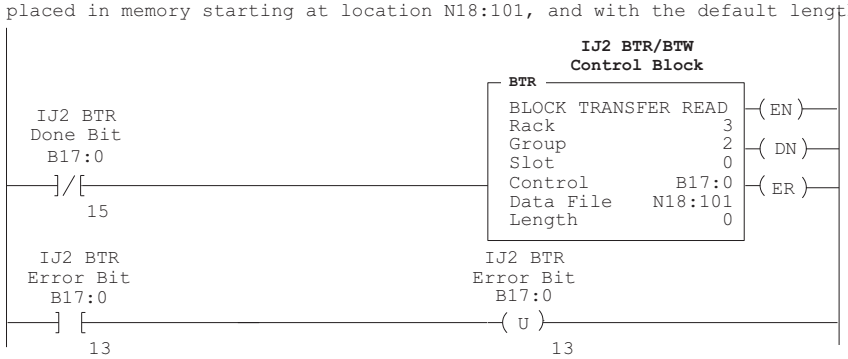

The IJ2 module is located in rack 3, I/O group 2, slot 0. The control file is a 10 word file starting at B17:0 that is shared by the BTR/BTW. The data sent by the PLC-3 processor to the IJ2 module is from PLC memory starting at N18:1, and with the default length of 0, is 8 words long.

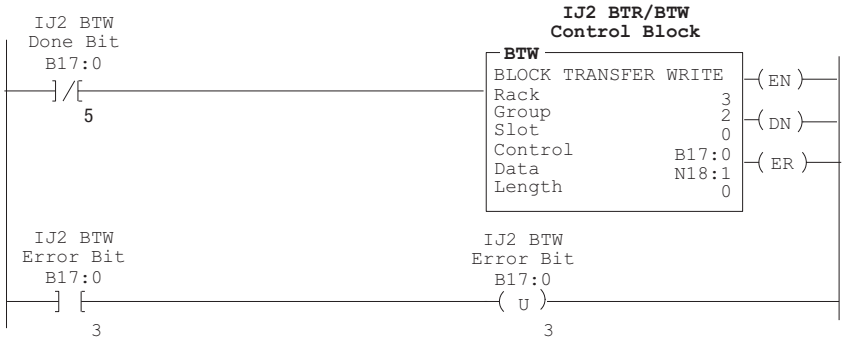

45563

PLC-5 Family Processor

Block transfer instructions with the PLC-5 processor use a control file and a data file. The block transfer control file contains the data table section for module location, the address of the block transfer data file and other related data. The block transfer data file stores data that you want transferred to the module (when programming a BTW) or from the module (when programming a BTR).

The programming terminal prompts you to create a control file when a block transfer instruction is being programmed. A different block transfer control file is used for the read and write instructions for your module.

PLC-5 Processor Program Example

Rung 2:0

The IJ2 module is located in rack 1, I/O group 2, slot 0. The integer control file starts at N22:200, is 5 words long and is compatible with all PLC-5 family members. The data obtained by the PLC-5 processor from the IJ2 module is placed in memory starting at N22:101, and with the default length of 0, is 7 words long. The length can be any number between 0 and 7. In enhanced PLC-5 processors[1], the block transfer data type may be used as a control file.

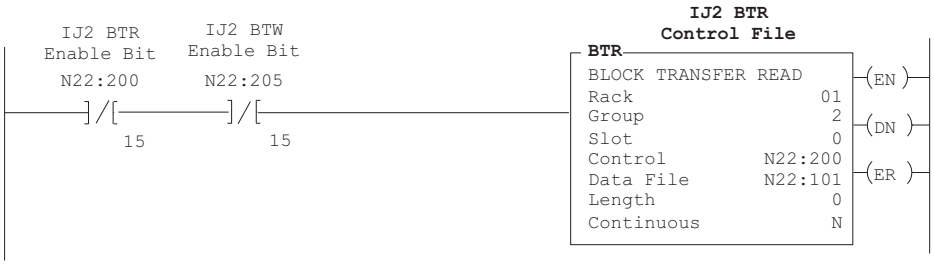

Rung 2:1

The IJ2 module is located in rack 1, group 2, slot 0. The integer control file starts at N22:205, is a 5 words long and is compatible will all PLC-5 family members. The data sent by the PLC-5 processor to the IJ2 module starts at N22:1, and with the default length of 0, is 8 words long. Valid BTW lengths can be any number from 0 to 8. In enhanced PLC-5 processors[1], the block transfer data type may be used as a control file.

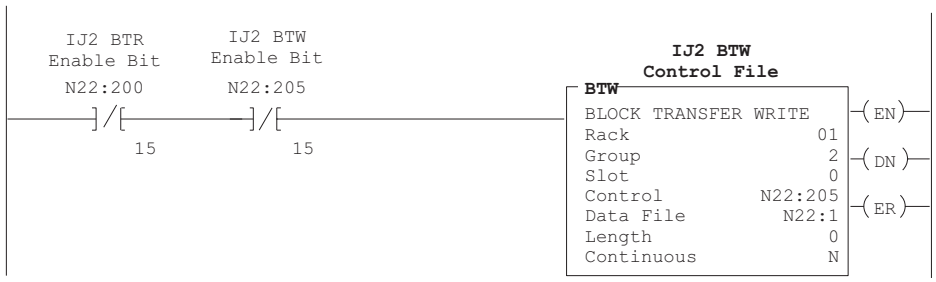

① Enhanced PLC-5 processors include: PLC-5/11, -5/20, -5/3x, -5/4x, and -5/6x.

45564

PLC-5/250 Family Processor

Block transfer instructions with the PLC-5/250 processor use a control file and a data file. The block transfer control file contains the data table section for module location, the address of the block transfer data file and other related data. The block transfer data file stores data that you want transferred to the module (when programming a BTW) or from the module (when programming a BTR).

The programming terminal automatically selects the control file based on rack, group and module, and whether it is a read or write. A different block transfer control file is used for the read and write instructions for your module. A different block transfer control file is required for every module.

PLC-5/250 Processor
Program Example

Rung 1STEP0:1
The IJ2 module is located in rack 14, I/O group 1, slot 0. The data obtained by the PLC-5/250 processor from the IJ2 module is placed in the data table starting at 2BTD5:101, and with the default length of 0, is 7 words long. The length can be any number between 0 and 7.

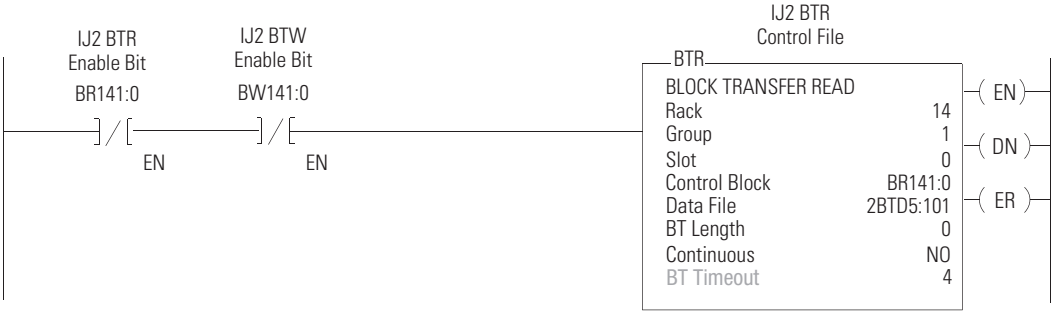

Rung 1STEP0:1
The IJ2 module is located in rack 14, I/O group 1, slot 0. The data sent to the IJ2 module from the PLC-5/250 processor is from the data table starting at 2BTD5:1, and with a default length of 0, is 8 words long.
Valid BTW lengths can be any number between 0 and 8.

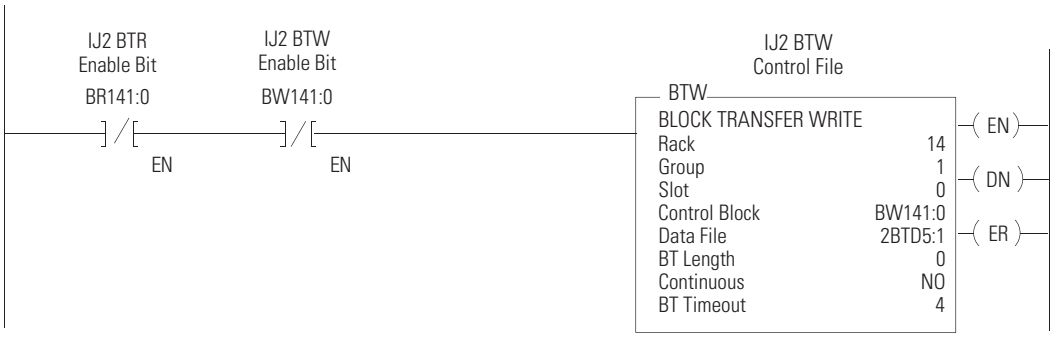

45565

Notes:

Numerics

1756-ENBT 29
1794-ACN15 4
1794-ACNR1 4
1794-ACNR15K 4
1794-ADN 4
1794-AENT 4
1794-APB 4
1794-APBDPV1 4
1794-ASB 4
1794-IJ2
- application 7
- capabilities 7
- features 8
- installation 13
- mode 7
- operation 8
- output capabilities 7
- power requirements 13
- wiring 21

1794-IJ2K 2
1794-IJ2XT 2
1794-TB3G 18, 20, 21, 22
1794-TB3GK 20, 21
1794-TB3GS 18, 20, 21, 22

A

acceleration
- absolute value 39
- alarm 43, 46
- calculation 33, 40, 43, 46

accuracy 7, 24, 25
adapter 1, 3, 5, 15, 16, 17, 18, 22, 52
- capabilities 20
- data transfer 3
- maximum capacity 20

alarm
- acceleration 38, 43
- frequency 8, 43
- missing pulse 9, 26, 38, 46, 47
- output 24, 52
- output alarm connections 24
- wire-off 38
- pulses to terminate sampling 33

application 7, 8

B

backplane 13, 16, 19, 51
bandwidth 10
bits words
- acceleration 38, 43
- communication fault 42
- definition 40
- diagnostic 53
- direction 38
- fault 38
- frequency alarm 46
- frequency range 42, 46
- frequency scaling 42, 45
- gate input state 38
- initiate startup 47
- input polarity 11
- invert select 47
- missing pulse 40
- missing pulse delay 46
- pulse 38, 40
- pulses
- wire-off 43, 46

block transfer read (BTR)
- bit definition 37
- bits 37
- decimal bit 36
- gate state 37
- octal bits 36
- word assignments 36

block transfer write (BTW)
- bit definition 40
- communication fault 40
- decimal bits 39
- frequency range 40, 41
- initiate startup 47
- instructions 3
- invert frequency 40
- invert gate 40
- local fault 40
- safe state 42
- wire-off 40
- missing pulse multiplier 40
- safe state mode 40

C

cable shields 23
cabling
- length 22
- power 22

calibration
failure 39, 53
chassis 13, 21, 22
combination type 21
communication 3, 4, 40, 41, 63, 69
CompactLogix 29
configuration
alarms 35
block transfer write 35
failure 39, 53
fault action 32
fault modes 35
individual 21
module properties 33
number of pulses 35
connector
female 15
FlexBus 16, 16, 19
male 15
contact switch 23
controller 3, 5, 7, 29, 64, 70
ControlLogix 29
ControlNet 29
current draw 14, 20, 23
total 20

D

daisychain 14, 21, 22
data map 35
data table 35
data transfer 3
deceleration 42, 45
device
2-wire 23
input 3
magnetic 23
diagnostic 39
calculation 39
calculation failure 53
calibration 39, 53
configuration 39
EEPROM 39
error 52
hardware 39
message 39
normal operation 39, 53
RAM 39
ROM 39, 53
status 53
test 52
dimensions
drilling 17
DIN rail 15, 16
direction detection 11
low to high transition 11
drilling 17

E

EEPROM
failure 39, 53
Ethernet 29

F

failure
calculation 53
calibration 53
configuration 53
EEPROM 53
hardware 53
message 53
RAM 53
ROM 53
fault
communication 42
gate wire-off 51
indicator 51
local 40, 41
missing pulse 46
mode 32
wire-off 38, 41, 40, 51
female connector 15
FLEX I/O
adapter 3
components 1
family 3
frequency input 13, 21
module 13
system 1, 2, 13
FlexBus 14, 15, 16, 19
frequency
alarm 7, 43
algorithm 2, 10
bandwidth 40
calculation 3, 8, 9, 39
determination 10
formula 8
input 7, 42, 44
input pulses 3
minimum sample time (ms) 8, 25, 44
maximum 32, 39, 43, 46
measurement 3

minimum 46
minimum sample time 32, 33, 41, 47
overange 39
parameters 8
percentage full scale 7
range 32, 33, 35
range bit setting 24
scale 7
zero 9

G

gate input
low to high transition 11
gate state 26
GND connection 24

H

hardware
failure 53
major failure 39, 53
hazardous location 19

I

I/O module 2, 3
IEC 1131-2 23
indicator
condition 52
description 52
fault 51
gate inputs 51
input 51, 52
output 51
power 51
wire-off fault 51
input
acceptable frequency 2
application 5
channel 6, 7
configuration 35
data maps 35
device 3
frequency 7, 11, 42, 44
gate 6, 11, 38
indicator 51, 52
map 25, 48
pulses 3, 41
read words 36
scaling calculation 3
scaling divisor 45
signals 6
types 23
usage 3
wire-off detection 46
write words 36
installation 14, 15
drilling dimension 16, 17
hazardous location 19
instructions 13
module position 13
mounting kit 17
requirements 13
terminal base 14, 18
wall or panel mounting 16
wiring 14

J

jumper 23

K

keyswitch 13, 18

L

ladder program 4
lead break 48, 53
local fault mode 41
location
hazardous 19
Logix system 5

M

magnetic pickup 6, 23
male connector 15
manuals
common techniques xii
conventions xii
related x
message
failure 39, 53
microcontroller 52
missing pulse 9, 10, 38, 43
module
acceleration calculation 46
faults 41
frequency input 6
position 22
safe state 41
status 52

MSG instructions 5

O

oil and gas 5
operation
mode 7
non-normal 39
normal 39, 53
unintended 14
output 52
alarm 52
connections 24
current 7
data 36
fused 7
indicator 51, 52
isolated 7
supply 24
output map
acceleration calculation 26, 49
communication fault 26, 49
frequency range 26, 49
invert frequency input 26, 49
invert gate input 26, 49
local fault mode 26, 49
missing pulse multiplier 26, 49
safe state mode 26, 49
wire-off fault frequency 26, 49
wire-off fault gate 26, 49
wire-off fault mode 26, 49
outputs 41
capabilities
output 7

P

panel
mounting 16
parameters 8, 10
percentage full scale 37
PLC 52
PLC 5 29
processor 63, 69
PLC-2 64, 70
PLC-3 64, 70
PLC-5/250 66, 72
power
backplane 19
cabling 22
connections 14
current draw 13
indicator 51
module 22
operational 13
requirements 13, 14
supply 22, 52
processor 3, 7, 35, 52
Profibus 29
programming
PLC-2 64, 70
PLC-3 64, 70
PLC-5/250 66, 72
proximity probe 6
publication
related x
pulse
alarm 7
missing 10, 38, 40, 41, 43, 46, 47
termination 39, 41

R

RAM
failure 39, 53
range bit 37
read programming 35
read words 35, 36, 37
Requested Packet Interval (RPI) 31
resistor 23
resolution 25
ROM
failure 39
rotation
clockwise 11
counterclockwise 11
direction 38
RSLogix 5000 29, 32

S

safe state 52
sampling time 8, 25, 35, 44
scaling 8
sensors 11
shunt resistor 44, 48, 51
SLC 29
specification
DIN rail 15
startup select 43
status
alarm outputs 51
diagnostic 39
frequency and gate inputs 51

indicator 52

T

tags 5
terminal base 1, 13, 14, 15, 17, 19
grounding 22
installation 14
mount 14
replace 14
wiring 14, 21
wiring methods 14
throughput 8
troubleshoot 51
turbine metering 5

V

vortex flowmeter 6

W

wire off 33, 44, 26
wiring
1794-TB3G, 1794-TB3GS, 1794-TB3GK 21
frequency module 21
illustration 14, 20
methods 14
onnecting 22
terminal base 21
word definition 37, 40
write word 39, 35, 40

Z

zero frequency 9

Notes:

Rockwell Automation Support

Rockwell Automation provides technical information on the Web to assist you in using its products.
At http://www.rockwellautomation.com/support/, you can find technical manuals, a knowledge base of FAQs, technical and application notes, sample code and links to software service packs, and a MySupport feature that you can customize to make the best use of these tools.

For an additional level of technical phone support for installation, configuration, and troubleshooting, we offer TechConnect support programs. For more information, contact your local distributor or Rockwell Automation representative, or visit http://www.rockwellautomation.com/support/.

Installation Assistance

If you experience a problem within the first 24 hours of installation, review the information that is contained in this manual. You can contact Customer Support for initial help in getting your product up and running.

United States or Canada	1.440.646.3434
Outside United States or Canada	Use the Worldwide Locator at http://www.rockwellautomation.com/support/americas/phone_en.html, or contact your local Rockwell Automation representative.

New Product Satisfaction Return

Rockwell Automation tests all of its products to ensure that they are fully operational when shipped from the manufacturing facility. However, if your product is not functioning and needs to be returned, follow these procedures.

United States	Contact your distributor. You must provide a Customer Support case number (call the phone number above to obtain one) to your distributor to complete the return process.
Outside United States	Please contact your local Rockwell Automation representative for the return procedure.

Documentation Feedback

Your comments will help us serve your documentation needs better. If you have any suggestions on how to improve this document, complete this form, publication RA-DU002, available at http://www.rockwellautomation.com/literature/.

Rockwell Otomasyon Ticaret A.Ş., Kar Plaza İş Merkezi E Blok Kat:6 34752 İçerenköy, İstanbul, Tel: +90 (216) 5698400

www.rockwellautomation.com

Power, Control and Information Solutions Headquarters

Americas: Rockwell Automation, 1201 South Second Street, Milwaukee, WI 53204-2496 USA, Tel: (1) 414.382.2000, Fax: (1) 414.382.4444
Europe/Middle East/Africa: Rockwell Automation NV, Pegasus Park, De Kleetlaan 12a, 1831 Diegem, Belgium, Tel: (32) 2 663 0600, Fax: (32) 2 663 0640
Asia Pacific: Rockwell Automation, Level 14, Core F, Cyberport 3, 100 Cyberport Road, Hong Kong, Tel: (852) 2887 4788, Fax: (852) 2508 1846

Publication 1794-6.5.11 - September 2011
Supersedes publication 1794-6.5.11 - November 1997
Copyright © 2011 Rockwell Automation, Inc. All rights reserved.