LISTEN.
THINK.
SOLVE.®

SLC 500 SYSTEMS

SELECTION GUIDE

BULLETIN 1746 AND 1747

ALLEN-BRADLEY • ROCKWELL SOFTWARE

Rockwell Automation

Important User Information

Solid state equipment has operational characteristics differing from those of electromechanical equipment. Safety Guidelines for the Application, Installation and Maintenance of Solid State Controls (publication SGI-1.1 available from your local Rockwell Automation sales office or online at http://rockwellautomation.com/literature) describes some important differences between solid state equipment and hard-wired electromechanical devices. Because of this difference, and also because of the wide variety of uses for solid state equipment, all persons responsible for applying this equipment must satisfy themselves that each intended application of this equipment is acceptable.

In no event will Rockwell Automation, Inc. be responsible or liable for indirect or consequential damages resulting from the use or application of this equipment.

The examples and diagrams in this manual are included solely for illustrative purposes. Because of the many variables and requirements associated with any particular installation, Rockwell Automation, Inc. cannot assume responsibility or liability for actual use based on the examples and diagrams.

No patent liability is assumed by Rockwell Automation, Inc. with respect to use of information, circuits, equipment, or software described in this manual.

Reproduction of the contents of this manual, in whole or in part, without written permission of Rockwell Automation, Inc., is prohibited.

Throughout this manual, when necessary, we use notes to make you aware of safety considerations.

WARNING	Identifies information about practices or circumstances that can cause an explosion in a hazardous environment, which may lead to personal injury or death, property damage, or economic loss.
IMPORTANT	Identifies information that is critical for successful application and understanding of the product.
ATTENTION	Identifies information about practices or circumstances that can lead to: personal injury or death, property damage, or economic loss. Attentions help you identify a hazard, avoid a hazard, and recognize the consequence.
SHOCK HAZARD	Labels may be on or inside the equipment, such as a drive or motor, to alert people that dangerous voltage may be present.
BURN HAZARD	Labels may be on or inside the equipment, such as a drive or motor, to alert people that surfaces may reach dangerous temperatures.

Allen-Bradley, Rockwell Automation, SLC 500, RSLogix 500, RSLinx, RSNetworx, and TechConnect are trademarks of Rockwell Automation, Inc.

Trademarks not belonging to Rockwell Automation are property of their respective companies.

Benefits

- **Powerful, yet affordable** – SLC 500 programmable controllers provide excellent value with extensive capabilities to address a broad range of applications including material handling, HVAC control, high speed assembly operations, small process control, simple motion control, and SCADA.
- **Modularity** – Modular processes, power supplies, I/O, memory options, and communication interfaces allow for a configurable and expandable system. Configure your system for the number of I/O, the amount of memory, and the communication networks needed. Later, you can expand the system by adding I/O, memory, or communication interfaces.
- **Advanced instruction set** – Includes indirect addressing, high level math capability, and a compute instruction. Communication network versatility - Choose from on-board Ethernet, DH+, or DH-485, as well as options for ControlNet, DeviceNet, or Remote I/O communications.
- **Broad selection of I/O** – Select from over 60 modules to control discrete, analog, and temperature signals. Third-party specialty modules are also available from Encompass partners to customize control solutions for your application needs. Industrially hardened product - Designed to withstand the vibrations, thermal extremes, and electrical noise associated with harsh industrial environments.
- **Windows programming software** – RSLogix 500 programming software maximizes productivity by simplifying program development and troubleshooting.

Allen-Bradley, ControlLogix, PLC-5, RSLinx, VersaView, Block I/O, CompactLogix, Flex, FlexLogix, MicroLogix, PanelView, RSLogix, RSNetWorx and SLC are trademarks of Rockwell Automation.

Trademarks not belonging to Rockwell Automation are the property of their respective companies.

SLC 500 System Overview

The Allen-Bradley SLC 500 is a small chassis-based family of programmable controllers, discrete, analog, and specialty I/O, and peripheral devices. The SLC 500 family delivers power and flexibility with a wide range of communication configurations, features, and memory options. The RSLogix 500 ladder logic programming package provides flexible editors, point-and-click I/O configuration, and a powerful database editor, as well as diagnostic and troubleshooting tools to help you save project development time and maximize productivity.

Topic	Page
Select SLC 500 I/O Modules	2
Select Network Communications	2
Select an SLC 500 Processor	69
Select an SLC 500 Chassis	75
Select SLC 500 Power Supplies	79
Select Programming Software	91
Summary	101

Typical Systems

With up to 64 K of configurable data/program memory available and over 60 types of I/O modules, as well as a choice of networking options, the SLC system provides a powerful solution for stand-alone or distributed industrial control.

Local Systems

At minimum, a modular hardware SLC 500 control system consists of a processor module and I/O modules in a single 1746 chassis with a power supply.

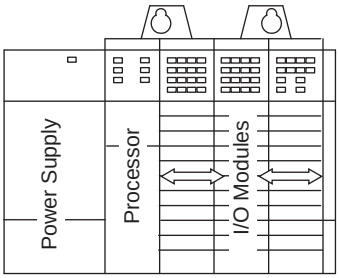

You can configure a system with one, two, or three local chassis, for a maximum total of 30 local I/O or communication modules. You connect multiple local chassis together with chassis interconnect cables to extend the backplane signal lines from one chassis to another.

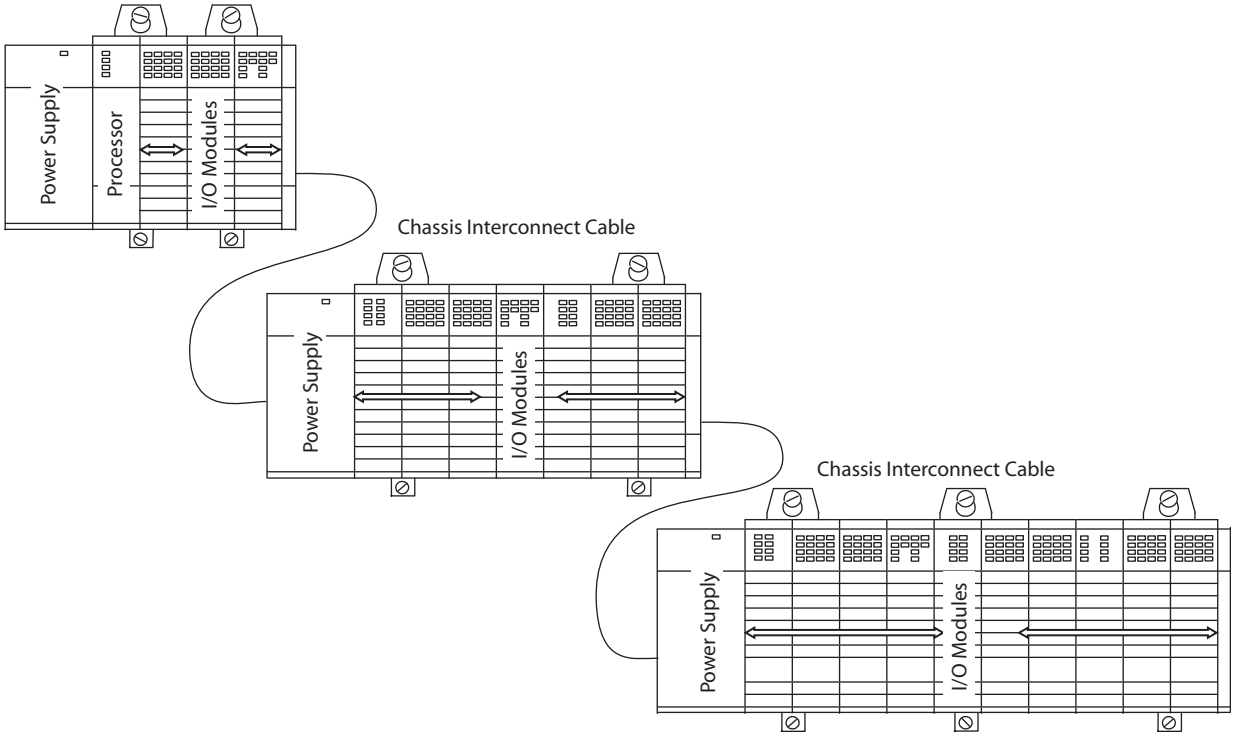

Distributed Systems

More complex systems can use:

- distributed I/O.

- multiple controllers joined across networks.
- I/O in multiple platforms that are distributed in many locations and connected over multiple I/O links.

Choose the processor module with the on-board communication ports you need. You optionally add modules to provide additional communication ports for the processor. For I/O in locations remote from the processor, you can choose between a ControlNet, DeviceNet, or Univeral I/O link. A communication interface module is required in both the local and remote chassis.

Depending upon the communication ports available on your particular SLC control system, you can select operator interfaces that are compatible.

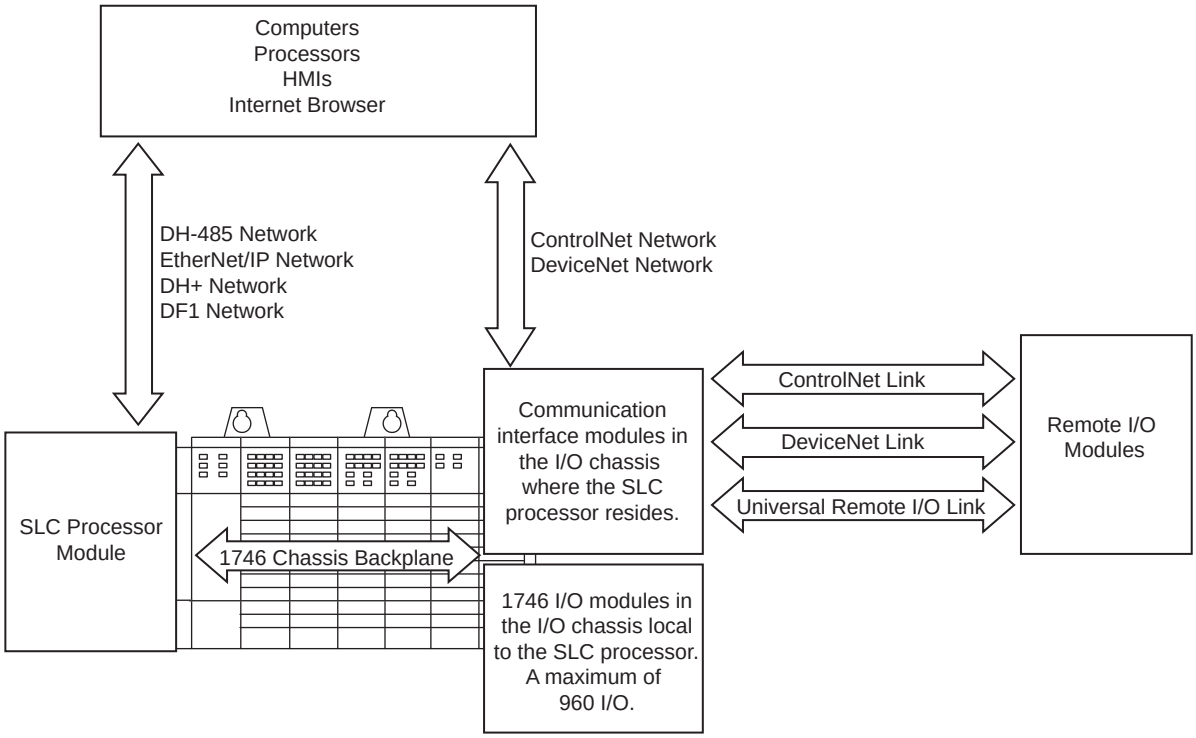

Laying Out the System

Lay out the system by determining the amount of I/O necessary, the network configurations, and the placement of components in each location. Decide at this time whether each chassis will have its own controller or a networked solution.

SLC 500 processors are available with a large range of memory sizes (1 K...64 K) and can control up to 4096 input and 4096 output signals. All modular processors except the SLC 5/01 processor are capable of controlling remotely located I/O. By adding an I/O scanner module, you can use these processors to control/monitor these remotely located I/O across ControlNet, DeviceNet, and Universal Remote I/O links.

SLC 500 processors are single-slot modules that you place into the left-most slot of a 1746 I/O chassis. For I/O in a location remote from the processor, the I/O adapter is a single-slot module that you place in the left-most slot of the I/O chassis. SLC 500 modular systems provide separate power supplies which must be mounted directly on the left end of the 1746 I/O chassis.

The 1746 I/O chassis are designed for back-panel mounting and available in sizes of 4, 7, 10, or 13 module slots. The 1746 I/O modules are available in densities up to a maximum of 32 channels per module.

Communications

Evaluate what communications need to occur. Knowing your communications requirements will help you determine which processor and which communications devices your application might require.

An SLC processor communicates across the 1746 backplane to 1746 I/O modules in the same chassis in which the processor resides. Various models of SLC processors have various on-board ports for communication with other processors or computers. Also, separate modules are available to provide additional communication ports for communication with other processors, computers, and remotely located I/O.

Each processor has one or two built-in ports for either EtherNet/IP, DH+, DH-485, or RS-232 (DF1, ASCII, or DH-485 protocol) communication.

In addition to the on-board ports available with SLC processors, you have the option of providing another communication port for an SLC processor by adding a communication module.

Adapter modules for 1746 I/O are available for ControlNet and Universal Remote I/O links. An I/O adapter module in a chassis with I/O modules interfaces the I/O modules with the I/O link for communication with a scanner port for a processor at another location.

SLC 500 Common Specifications

The following specifications apply to all SLC 500 modular components unless noted.

Environmental Specifications

Attribute	Value
Temperature, operating	IEC 60068-2-1 (Test Ad, Operating Cold), IEC 60068-2-2 (Test Bd, Operating Dry Heat), IEC 60068-2-14 (Test Nb, Operating Thermal Shock): 0…60 °C (32…140 °F)
Temperature, nonoperating	IEC 60068-2-1 (Test Ab, Unpackaged Nonoperating Cold), IEC 60068-2-2 (Test Bb, Unpackaged Nonoperating Dry Heat), IEC 60068-2-14 (Test Na, Unpackaged Nonoperating Thermal Shock): -40…85 °C (-40…185 °F)
Relative humidity	IEC 60068-2-30 (Test Db, Unpackaged Damp Heat): 5…95% without condensation

Environmental Specifications

Attribute	Value
Vibration, operating	IEC 60068-2-6 (Test Fc, Operating): 1 g @ 5…2000 Hz
Vibration, nonoperating	2.5 g @ 5…2000 Hz
Shock, operating	30 g (3 pulses, 11 ms) – for all modules except relay contact 10 g (3 pulses, 11 ms) – for relay contact modules 1746-OWx and 1746-IOx combo
Shock, nonoperating	50 g, 3 pulses, 11 ms
Free fall (drop test)	Portable, 2.268 kg (5 lb) or less @ 0.762 m (30 in.), six drops Portable, 2.268 kg (5 lb) or less @ 0.1016 m (4 in.), three flat drops
Isolation voltage	Isolation between communication circuits: 500V DC Isolation between backplane and I/O: 1500V AC

Certifications

Certifications when product is marked(1)	Value
UL	UL Listed for Class I, Division 2 Group A,B,C,D Hazardous Locations. See UL File E10314.
c-UL	UL Listed for Class I, Division 2 Group A,B,C,D Hazardous Locations, certified for Canada. See UL File E10314.
CE	European Union 2004/108/EC EMC Directive, compliant with: EN 61000-6-2; Industrial Immunity EN 61000-6-4; Industrial Emissions EN 61131-2; Programmable Controllers (Clause 8, Zone A & B) European Union 2006/95/EC LVD, compliant with: EN 61131-2; Programmable Controllers (Clause 11)
C-Tick	Australian Radiocommunications Act, compliant with: AS/NZS CISPR 11; Industrial Emissions
KC	Korean Registration of Broadcasting and Communications Equipment, compliant with: Article 58-2 of Radio Waves Act, Clause 3

(1) See the Product Certification link at http://www.rockwellautomation.com/products/certification/ for Declarations of Conformity, Certificates, and other certification details.

SLC 500 System Checklist

Use the following Checklist as a guide to completing your own system specification.

✓	Step	See
	1 Select I/O Modules • consider using an interface module or pre-wired 1492 cables • use a spreadsheet to record your selections	page 9
	2 Select Communication Modules/Devices • determine your network communication requirements and select the necessary communication modules/devices • include appropriate communication cables • record your module/device selections on the system spreadsheet	page 51
	3 Select an SLC 500 Processor • choose a processor based on memory, I/O, performance, programming requirements, and communication options	page 69
	4 Select an SLC 500 Chassis • determine the number of chassis and any interconnect cables required based on the physical configuration of your system	page 75
	5 Select an SLC 500 Power Supply • use the power supply loading worksheet to ensure sufficient power for your system • consider future system expansion when selecting a power supply	page 79
	6 Select Programming Software • select the appropriate package of RSLogix 500 Programming Software for your application	page 91

Notes:

Step 1 - Select:

- *I/O modules – available in a variety of densities and voltage options. Some modules have diagnostic features, individually isolated inputs/outputs or electronic protection.*
- *interface modules (IFMs) or prewired cables (optional)*

Select SLC 500 I/O Modules

Digital I/O modules, analog I/O modules, and specialty temperature, counting, process control, and BASIC language modules are available to help you create a custom solution for your application.

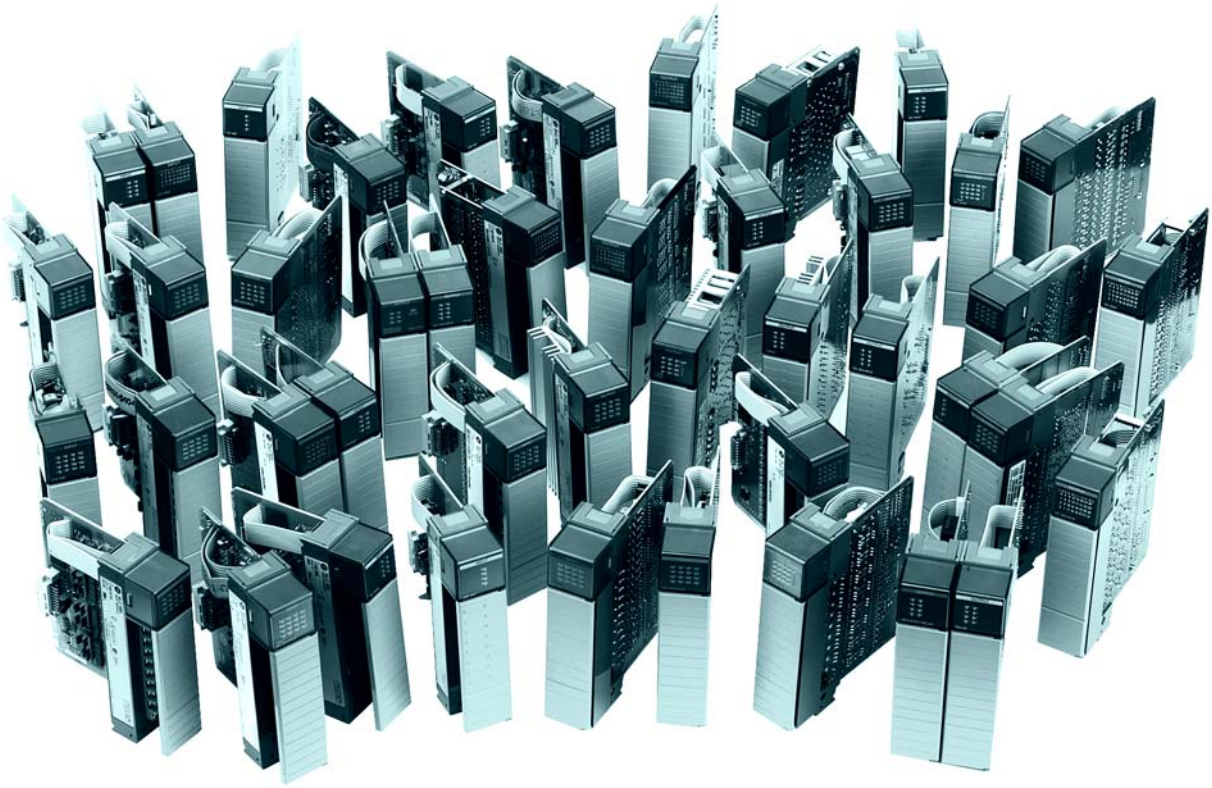

1746 Digital I/O modules

Digital I/O modules are available with 4, 8, 16, or 32 channels and in a wide variety of I/O voltages (including AC, DC, and TTL). Combination modules with 2 inputs/2 outputs, 4 inputs/4 outputs, and 6 inputs/6 outputs are also available.

Terminals on the 4, 8, 12, and 16-channel modules have self-lifting pressure plates that accept two 14 AWG (2 mm2) wires. LED indicators on the front of each module display the status of each I/O point.

32-channel I/O modules are equipped with a 40-pin, MIL-C-83503 type header and a removable wiring connector (1746-N3). The connector can be assembled with the wire type and length of your choice.

Output modules are available with solid-state AC, solid-state DC, and relay contact type outputs. High current solid-state output modules, catalog numbers 1746-OBP16, 1746-OVP16, and 1746-OAP12, have fused commons with a blown fuse LED indication. The

1746-OB16E, 1746-OB6EI, and 1746-OB32E modules provide electronic protection from short circuit and overload conditions.

Wiring of 16 and 32-channel modules can also be accomplished with a bulletin 1492 interface module and pre-wired cable. All 16-channel I/O modules and catalog numbers 1746-OX8, 1746-OBP8, 1746-OAP12, 1746-IO12 are equipped with color-coded removable terminal blocks.

Digital I/O Module Overview

Catalog Number	Voltage Category	I/O Points	Description	For Detailed Specifications, See
DC Modules				
1746-IB8	24V DC	8	Current Sinking DC Input Module	Sinking DC Input Modules page 11
1746-IB16	24V DC	16	Current Sinking DC Input Module	
1746-IB32	24V DC	32	Current Sinking DC Input Module	
1746-ITB16	24V DC	16	Fast Response DC Sinking Input Module	
1746-IC16	48V DC	16	Current Sinking DC Input Module	
1746-IH16	125V DC	16	Current Sinking DC Input Module	
1746-IV8	24V DC	8	Current Sourcing DC Input Module	Sourcing DC Input Modules page 12
1746-IV16	24V DC	16	Current Sourcing DC Input Module	
1746-IV32	24V DC	32	Current Sourcing DC Input Module	
1746-ITV16	24V DC	16	Fast Response DC Sourcing Input Module	
1746-IG16(1)	5V DC	16	Current Sourcing TTL Input Module	
1746-OB6EI	24V DC	6	Electronically Protected Isolated Sourcing DC Output Module	Sourcing DC Output Modules page 13
1746-OB8	24V DC	8	Current Sourcing DC Output Module	
1746-OB16	24V DC	16	Current Sourcing DC Output Module	
1746-OB16E	24V DC	16	Electronically Protected Current Sourcing DC Output Module	
1746-OB32	24V DC	32	Current Sourcing DC Output Module	
1746-OB32E	24V DC	32	Electronically Protected Current Sourcing DC Output Module	
1746-OBP8	24V DC	8	High Current Sourcing DC Output Module	
1746-OBP16(2)	24V DC	16	High Current Sourcing DC Output Module	
1746-OV8	24V DC	8	Current Sinking DC Output Module	Sinking DC Output Modules page 12
1746-OV16	24V DC	16	Current Sinking DC Output Module	
1746-OV32	24V DC	32	Current Sinking DC Output Module	
1746-OVP16(2)	24V DC	16	High Current Sinking DC Output Module	
1746-OG16(1)	5V DC	16	Current Sinking TTL Output Module	
AC Modules				

Digital I/O Module Overview

Catalog Number	Voltage Category	I/O Points	Description	For Detailed Specifications, See
1746-IA4	100/120V AC	4	120V AC Input Module	AC Input Modules page 14
1746-IA8	100/120V AC	8	120V AC Input Module	
1746-IA16	100/120V AC	16	120V AC Input Module	
1746-IM4	200/240V AC	4	240V AC Input Module	
1746-IM8	200/240V AC	8	240V AC Input Module	
1746-IM16	200/240V AC	16	240V AC Input Module	
1746-OA8	120/240V AC	8	120/240V AC Output Module	AC Output Modules page 15
1746-OA16	120/240V AC	16	120/240V AC Output Module	
1746-OAP12(2)	120/240V AC	12	High Current 120/240V AC Output Module	
AC/DC Modules				
1746-IN16	24V AC/DC	16	24V AC/DC Input Module	AC Input Modules page 14
1746-OW4(2)	AC/DC Relay	4	Relay (Hard Contact) Output Module	Relay Output Modules page 16
1746-OW8(2)	AC/DC Relay	8	Relay (Hard Contact) Output Module	
1746-OW16(2)	AC/DC Relay		Relay (Hard Contact) Output Module	
1746-OX8(2)	AC/DC Relay	8	Relay (Hard Contact) Output Module	
1746-IO4(2)	120V ac (Inputs) 100/120V AC (Relay Contact Outputs)	2 In 2 Out	Combination Input/Output Module	Combination I/O Modules page 17
1746-IO8(2)	120V AC (Inputs) 100/120V AC (Relay Contact Outputs)		Combination Input/Output Module	
1746-IO12(2)	120V AC (Inputs) 100/120V AC (Relay Contact Outputs)	4 In 4 Out	Combination Input/Output Module	
1746-IO12DC	24V DC (Inputs) 100/120V AC (Relay Contact Outputs)	6 In 6 Out	Combination Input/Output Module	

(1) Not CE marked.

(2) Certified for Class 1, Division 2 hazardous location by C-UL only.

Sinking DC Input Modules

Specifications	1746-IB8	1746-IB16	1746-IB32	1746-IC16	1746-IH16(1)	1746-ITB16
Number of Inputs	8	16	32	32	16	16
Points Per Common	8	16	8	8	16	16
Voltage Category	24V DC			48V DC	125V DC	24V DC
Operating Voltage Range	10…30V DC		15…30V DC @ 50 °C (122 °F) 15…26.4V DC @ 60 °C (140 °F)	30…60V DC @ 55 °C (131 °F) 30…55V DC @ 60 °C (140 °F)	90…146V DC(2)	10…30V DC
Backplane Current (mA) @ 5V	50 mA	50 mA	50 mA	50 mA		
Backplane Current (mA) @ 24V	0 mA	0 mA	0 mA	0 mA	0 mA	0mA

Sinking DC Input Modules

Specifications	1746-IB8	1746-IB16	1746-IB32	1746-IC16	1746-IH16(1)	1746-ITB16
Voltage, Off-State Input, max.	5.0V DC			10V DC	20V DC	5V DC
Nominal Input Current	8 mA @ 24V DC		5.1 mA @ 24V DC	4.1 mA @ 48V DC	2.15 mA @ 125V DC 2.25 mA @ 132V DC	8 mA @ 24V DC
Current, Off-State Input, Max.	1 mA		1.5 mA		0.8 mA	1.5 mA
Signal On Delay, Max	8 ms max		3 ms max	4 ms max	9 ms max	0.30 ms max
Signal Off Delay, Max	8 ms max		3 ms max	4 ms max	9 ms max	0.50 ms max

(1) If the input module is connected in parallel with an inductive load, use surge suppression across the load to protect the input module from damage caused by reverse voltage. Refer to the SLC 500 Modular Hardware Style User Manual, publication 1747-UM011, for more information on surge suppression.

(2) Maixumum Points ON Simultaneously: 16 @ 146V DC and 30 °C (86 °F); 12 @ 146V DC and 50 °C (122 °F); 14 @ 132V DC and 55 °C (131 °F); 16 @ 125V DC and 60 °C (140 °F).

Sourcing DC Input Modules

Specifications	1746-IG16	1746-IV8	1746-IV16	1746-IV32	1746-ITV16
Number of inputs	16	8	16	32	16
Points per common	16	8	16	8	16
Voltage category	5V DC	24V DC	24V DC	24V DC	24V DC
Operating voltage range	4.5…5.5V DC(1)	10…30V DC		15…30V DC@ 50 °C (122 °F) 15…26.4V DC@ 60 °C (140 °F)	10…30V DC
Backplane current (mA) @ 5V	140 mA	50 mA	85 mA	50 mA	85 mA
Backplane current (mA) @ 24V	0 mA	0 mA	0 mA	0 mA	0 mA
Voltage, off-state input, max.	2…5.5V DC	5.0V DC	5.0V DC	5.0V DC	5.0V DC
Nominal input current	3.7 mA @ 5V DC	8 mA @ 24V DC		5.1 mA @ 24V DC	8 mA @ 24V DC
Current, off-state input, max.	4.1 mA	1 mA		1.5 mA	1.5 mA
Signal on delay, max	0.25 ms max	8 ms max		3 ms max	0.30 ms max
Signal off delay, max	0.50 ms max	8 ms max		3 ms max	0.50 ms max(2)

(1) 50 mV peak-to-peak ripple (max.)

(2) Typical signal delay for this module: ON = 0.1 ms, OFF = 0.25 ms @ 24V DC.

Sinking DC Output Modules

Specifications	1746-OG16	1746-OV8	1746-OV16	1746-OV32	1746-OVP16(5)
Number of outputs	16	8	16	32	16
Points per common	16	8	16	16	16
Voltage category	5V DC	24V DC			
Operating voltage range	4.5…5.5V DC(2)	10…50V DC		5…50V DC	20.4…26.4V DC
Backplane current (mA) @ 5V	180 mA	135 mA	270 mA	190 mA	250 mA
Backplane current (mA) @ 24V	0 mA	0mA	0 mA	0 mA	0 mA

Sinking DC Output Modules

Specifications	1746-OG16	1746-OV8	1746-OV16	1746-OV32	1746-OVP16[5]
Voltage drop, on-state output, max.	—	1.2V @ 1.0 A	1.2V @ 0.5 A	1.2V @ 0.5 A	1.0 V @ 1.0 A
Load current, min.	0.15 mA	1 mA	1 mA	1 mA	1 mA
Leakage current, off-state output,max	0.1 mA	1 mA[3]	1 mA[3]	1 mA[3]	1 mA[3]
Signal On Delay, max (resistive load)	0.25 ms	0.1 ms	0.1 ms	0.1 ms	0.1 ms[6]
Signal Off Delay, max (resistive load)	0.50 ms	1.0 ms	1.0 ms	1.0 ms	1.0 ms
Continuous current per module	N/A	8.0 A @ 30 °C (86 °F) 4.0 A @ 60 °C (140 °F)		8.0 A @ 0…60 °C (32…140 °F)	6.4 A @ 0…60 °C (32…140 °F)
Continuous current per point	24 mA	1.0 A @ 30 °C (86 °F) 0.5 A @ 60 °C (140 °F)	0.50 A @30 °C (86 °F) 0.25 A @60 °C (140 °F)[4]	0.50 A @ 30 °C 0.25 A @ 60 °C	1.5 A @ 30 °C (86 °F) 1.0 A @ 60 °C (140 °F)[7]
Surge current per point for 10 ms[1]	N/A	3.0 A		1.0 A @ 30 °C (86 °F) 1.0 A @ 60 °C (140 °F)	4.0 A[8]

(1) Repeatability is once every 1 s @ 30 °C (86 °F). Repeatability is once every 2 s @ 60 °C (140 °F).

(2) 50 mV peak to peak ripple, max.

(3) To limit the effects of leakage current through solid-state outputs, a loading resistor can be connected in parallel with your load. For transistor outputs, 24V DC operation, use a 5.6 K Ω, 1/2 W resistor.

(4) Recommended surge suppression: For transistor outputs, when switching 24V DC inductive loads, use a 1N4004 diode reverse-wired across the load. Refer to the SLC 500 Modular Hardware Style User Manual, publication 1747-UM011, for more information on surge suppression.

(5) The 1746-OVP16 module features a fused common and blown fuse LED indicator.

(6) Fast turn-off modules provide fast OFF delay for inductive loads. Fast turn-off delay for inductive loads is accomplished with surge suppressors on this module. A suppressor at the load is not needed unless another contact is connected in series. If this is the case, a 1N4004 diode should be reverse wired across the load. This defeats the fast turn-off feature. Comparative OFF delay times for 1746-OB8, 1746-OV8 and fast turn-off modules, when switching Bulletin 100-B110 (24 W sealed) contactor, are: 1746-OB8 and 1746-OV8 modules OFF delay = 152 ms; fast turnoff modules OFF delay = 47 ms.

(7) Fast off-delay for inductive loads is accomplished with surge suppressors on the 1746-IB6EI and 1746-OBP8 series B and later, 1746-OB16E series B and later, 1746-OBP16 and 1746-OVP16 modules. A suppressor at the load is not needed unless another contact is connected in series. If this is the case, a 1N4004 diode should be reverse-wired across the load. This defeats the fast turn-off feature.

(8) Surge current = 32 A per module for 10 ms.

Sourcing DC Output Modules

Specifications	1746-OB6EI	1746-OB8	1746-OB16	1746-OB16E	1746-OB32	1746-OB32E	1746-OBP8[4]	1746-OBP16
Number of outputs	6 Electronically Protected	8	16	16 Electronically Protected	32	32 Electronically Protected	8	16[5]
Points per common	Individually isolated	8	16	16	16	16	4	16
Voltage category	24V DC							
Operating voltage range	10 …30V DC	10…50V DC		10…30V DC	5…50V DC	10…30V DC	20.4…26.4V DC	
Backplane current (mA) @ 5V	46 mA	135 mA	280 mA	135 mA	190 mA		135 mA	250 mA
Backplane current (mA) @ 24V	0 mA	0 mA	0 mA	0 mA	0 mA	0 mA	0 mA	0 mA

Sourcing DC Output Modules

Specifications	1746-OB6EI	1746-OB8	1746-OB16	1746-OB16E	1746-OB32	1746-OB32E	1746-OBP8[4]	1746-OBP16
Voltage drop, on-state output, max.	1.0V @ 2.0 A	1.2V @ 1.0 A	1.2V @ 0.5 A	1.0V @ 0.5 A	1.2V @ 0.5 A		1.0V @ 2.0 A	1.0V @ 1.0 A
Load current, min.	1 mA	1 mA	1 mA	1 mA	1 mA	1 mA	1 mA	1 mA
Leakage current, off-state output,max	1 mA	1 mA	1 mA	1 mA	1 mA	1 mA	1 mA	1 mA
Signal on delay, max (resistive load)	1.0 ms[2]	0.1 ms	0.1 ms	1.0 ms[3]	0.1 ms	1.0 ms	1.0 ms[3]	0.1 ms[3]
Signal off delay, max (resistive load)	2.0 ms	1.0 ms	1.0 ms	1.0 ms	1.0 ms	2.0 ms	2.0 ms	1.0 ms
Continuous current per module	12.0 A @ 0…60 °C (32 °…140 °F)	8.0 A @ 30 °C (86 °F) 4.0 A @ 60 °C (140 °F)		8.0 A @ 0…60 °C (32…140 °F)				6.4 A @ 0…60 °C (32…140 °F)
Continuous current per point	2.0 A @ 0…60 °C (32 °…140 °F)[3]	1.0 A @ 30 °C (86 °F) 0.50 A @ 60 °C (140 °F)	0.50 A @ 30 °C (86 °F) 0.25 A @ 60 °C (140 °F)	1.0 A @ 30 °C (86 °F) 0.50 A @ 60 °C (140 °F)[4]	0.50 A @ 30 °C (86 °F) 0.25 A @ 60 °C (140 °F)		2.0 A @ 0…60 °C (32…140 °F)[4]	1.5 A @ 30 °C (86 °F) 1.0 A @ 60 °C (140 °F)[4]
Surge current per point for 10 ms[1]	4.0 A	3.0 A		2.0 A	1.0 A @ 30 °C (86 °F) 1.0 A @ 60 °C (140 °F)		4.0 A	

(1) Repeatability is once every 1 s @ 30 °C (86 °F). Repeatability is once every 2 s @ 60 °C (140 °F).

(2) Fast turn-off modules provide fast OFF delay for inductive loads. Comparative OFF delay times for 1746-OB8, 1746-OV8 and fast turn-off modules, when switching Bulletin 100-B110 (24 W sealed) contractor, are: 1746-OB8 and 1746-OV8 modules OFF delay = 152 ms; fast turn-off modules OFF delay = 47 ms.

(3) Fast off-delay for inductive loads is accomplished with surge suppressors on the 1746-IB6EI, 1746-OBP8 series B and later, 1746-OB16E series B and later, 1746-OBP16, and 1746-OVP16 modules. A suppressor at the load is not needed unless another contact is connected in series. If this is the case, a 1N4004 diode should be reverse-wired across the load. This defeats the fast turn-off feature.

(4) An external fuse can be used to protect this module from short circuits. Recommended fuse is SANO MQ 4-3.15 A, 5 x 20 mm.

(5) The 1746-OBP16 module features a fused common and blown fuse LED indicator.

AC Input Modules

Specifications	1746-IA4	1746-IA8	1746-IA16	1746-IM4	1746-IM8	1746-IM16	1746-IN16
Number of inputs	4	8	16	4	8	16	16
Points per common	5	8	16	4	8	16	16
Voltage category	100/120V AC			200/240V AC			24V AC/DC
Operating voltage range	85…132V AC @ 47…63 Hz			170…265V AC @ 47…63 Hz			10…30V AC 10…30V DC
Backplane current (mA) @ 5V	35 mA	50 mA	85 mA	35 mA	50 mA	85 mA	85 mA
Backplane current (mA) @ 24V	0 mA	0 mA	0 mA	0 mA	0 mA	0 mA	0 mA
Voltage, off-state input, max	30V AC			50V AC			3.0V DC 3.0V AC

AC Input Modules

Specifications	1746-IA4	1746-IA8	1746-IA16	1746-IM4	1746-IM8	1746-IM16	1746-IN16
Nominal input current	12 mA @ 120V AC			12 mA @ 240V AC			8 mA @ 24V DC 8 mA @ 24V AC
Current, off-state input, max.	2 mA	2 mA	2 mA	2 mA	2 mA	2 mA	1 mA (DC) 1 mA (AC)
Inrush current, max.(1)	0.8 A			1.6 A			0.02 A (AC only)
Inrush current time duration, max.	0.5 ms	0.5 ms	0.5 ms	0.5 ms	0.5 ms	0.5 ms	—
Signal on delay, max.	35 ms max	35 ms max	35 ms max	35 ms max	35 ms max	35 ms max	15 ms max (DC) 25 ms (AC)
Signal off delay, max	45 ms max	45 ms max	45 ms max	45 ms max	45 ms max	45 ms max	15 ms max (DC) 25 ms (AC)

(1) An AC input device must be compatible with SLC 500 input circuit inrush current. A current limiting resistor can be used to limit inrush current. However, the operating characteristics of the AC input circuit are affected.

AC Output Modules

Specifications	1746-OA8	1746-OA16	1746-OAP12
Number of outptus	8	16	12
Points per common	4	8	6(5)
Voltage category	120/240V AC		
Operating voltage range	85…265V AC @ 47…63 Hz		
Backplane current (mA) @ 5V	185 mA	370 mA	
Backplane current (mA) @ 24V	0 mA	0 mA	0 mA
Voltage drop, on-state output, max	1.50V @ 1.0 A	1.50V @ 0.50 A	1.2V @ 2.0 A
Load current, min	10 mA	10 mA	10 mA
Leakage current, off-state output, max(1)	2 mA	2 mA	2 mA
Surge current per point, max(2)	10 A for 25 ms		17.0 A for 25 ms(6)
Signal on delay, max (resistive load)(3)	1 ms	1 ms	1 ms
Signal off delay, max (resistive load)(5)	11 ms	11 ms	11 ms
Continuous current per point(4)	1.0 A @ 30 °C (86 °F) 0.50 A @ 60 °C (140 °F)	0.50 A @ 30 °C (86 °F) 0.25 A @ 60 °C (140 °F)	2.0 A @ 30 °C (86 °F) 1.25 A @ 55 °C (131 °F) 1.0 A @ 60 °C (140 °F)
Continuous current per module	8.0 A @ 30 °C (86 °F) 4.0 A @ 60 °C (140 °F)		9.0 A @ 30 °C (86 °F) 6.0 A @ 60 °C (140 °F)

(1) To limit the effects of leakage current through solid-state oututs, a loading resistor can be connected in parallel with your load. For 120V AC operation, use a 15 kΩ, 2 W resistor. For 240V AC operation, use a 15 kΩ, 5 W resistor.

(2) Repeatability is once every 1 s @ 30 °C (86 °F). Repeatability is once every 2 s @ 60 °C (140 °F).

(3) Triac outputs turn on at any point in the AC line cycle and turn off at AC line zero cross.

(4) Recommended surge suppression: For triac outputs when switching 120V AC inductive loads, use Harris Metal-oxide Varistor, model number V220MA2A. Refer to the SLC 500 Modular Hardware Style User Manual, publication 1747-UM011 for more information on surge suppression.

(5) The 1746-OAP12 module features a fused common and blown fuse LED indicator.

(6) Surge current = 35 A per common for 10 ms.

Relay Output Modules

Specifications	1746-OW4	1746-OW8(2)	1746-OW16(2)	1746-OX8(2)
Number of outputs	4	8	16	8
Points per common	4	4	8	Inidvidually isolated
Voltage category	AC/DC Relay			
Operating voltage range	5…125V DC 5…265V AC			
Backplane current (mA) @ 5V	45 mA	85 mA	170 mA	85 mA
Backplane current (mA) @ 24V	45 mA	90 mA	180 mA	90 mA
Load current, min	10 mA @ 5V DC			
Leakage current, off-state output, max	0 mA	0 mA	0 mA	0 mA
Signal on delay, max (resistive load)	10 ms	10 ms	10 ms	10 ms
Signal off delay, max (resistive load)	10 ms	10 ms	10 ms	10 ms
Continuous current per point(1)	See relay contact ratings			
Continuous current per module	8.0 A AC 8.0 A/Common	16.0 A AC 8.0 A/Common		(3)

(1) Recommended surge suppression: For triac outputs when switching 120V ac inductive loads, use Harris Metal-oxide Varistor, model number V220MA2A. Refer to the SLC 500 Modular Hardware Style User Manual, publication 1747-UM011 for more information on surge suppression.

(2) Certified for Class 1 Div 2 Hazardous Locations by CSA.

(3) Limit continuous current per module so that module power does not exceed 1440 VA.

Relay Contact Ratings

Catalog Number	Maximum Volts		Amperes(1)		Amperes(3) Continuous	Volt-Amperes	
			Make	Break		Make	Break
1746-OW4 1746-OW8 1746-OW16	AC	240V AC	7.5 A	0.75 A	2.5 A	1800 VA	180 VA
		120V AC	15 A	1.5 A			
	DC	125V DC	0.22 A(2)		1.0 A	28 VA	
		24V DC	1.2 A(2)		2.0 A		
1746-OX8	AC	240V AC	15 A	1.5 A	5.0 A	3600 VA	360 VA
		120V AC	30 A	3.0 A			
	DC	125V DC	0.22 A(2)		1.0 A	28 VA	
		24V DC	1.2 A(2)		2.0 A		

(1) Connecting surge suppressors across your external load extends the life of SLC 500 relay contacts. For recommended surge suppression when switching ac inductive loads, consult the SLC 500 Modular Hardware Style User Manual, publication 1746-UM011. Recommended surge suppression for switching 24V dc inductive loads is 1N4004 diode reverse wired across the load.

(2) For dc voltage applications, the make/break ampere rating for relay contacts can be determined by dividing the 28 VA by the applied dc voltage. For example, 28 VA/48V DC= 0.58 A for DC voltage applications less than 14V, the make/break ratings for relay contacts cannot exceed 2 A.

(3) The continuous current per module must be limited so the module power does not exceed 1440 VA.

Combination I/O Modules

Specifications	1746-IO4	1746-IO8	1746-IO12	1746-IO12DC
Number of inputs	2	4	6	6
Number of outputs	2	4	6	6
Points per common	2	4	6	6
Voltage category	120V AC (inputs) 100/120V AC (relay contact outputs)			10…30V DC (inputs) 5…265V AC @ 47…63 Hz / 5…125V DC (outputs)
Operating voltage range	85…132V AC @ 47…63 Hz (inputs) 5…265V AC @ 47…63 Hz / 5…125V DC (outputs)			10…30V DC (inputs) 5…265V AC @ 47…63 Hz / 5…125V DC (outputs)
Backplane current (mA) @ 5V	30 mA	60 mA	90 mA	80 mA
Backplane current (mA) @ 24V	25 mA	45 mA	70 mA	60 mA
Continuous current per point	See Relay Contact Ratings for 1746-OW4 on page 16		See Relay Contact Ratings for 1746-OW16 on page 16	
Continuous current per module	4 A	8 A	8 A	8 A

1746-SIM Input Simulator

The 1746-SIM Input Simulator is designed for use on 16-channel 24V DC sinking and sourcing modules with removable terminal blocks, including 1746-IB16, 1746-ITB16, 1746-IV16, 1746-ITV16, and 1746-IN16 modules. The input simulator provides 16 switches for simulating inputs to the SLC 500.

1746 Analog I/O Modules

Analog I/O modules feature user-selectable voltage or current inputs, backplane isolation, removable terminal blocks, and diagnostic feedback.

The 1746-NI4, 1746-NIO4I, and 1746-NIO4V input channels are filtered to reject high frequency noise and provide 14- to 16-bit (range-dependent) resolution.

All 4-channel analog output modules provide 14-bit resolution and a 2.5 ms conversion rate.

The 1746-FIO4I and 1746-FIO4V modules have less input filtering and can sense more rapidly changing inputs. However, their input resolution is only 12-bit. Because the input filter on the 1746-FIO4I or 1746-FIO4V module may pass more electrical noise, you should thoroughly ground and shield the input transducer, its power supply, and cables.

The 1746-NI8 module provides high accuracy and fast analog signal conversion. The 1746-NI8, 1746-NI16I and 1746-NI16V modules are high density analog input modules that are software configurable.

The 1746-NO8I (current output) and 1746-NO8V (voltage output) modules are high density, analog output modules that provide 8 individually configurable output channels with 16-bit resolution.

Analog I/O Module Overview

Catalog Number	Description	Voltage Category	For specifications, see
1746-NI4	High Resolution (4) Analog Input Module	-20…+20 mA (or) -10…+10V DC	page 19: General Input Specifications page 19: Current Loop Input Specifications page 20: Voltage Input Specifications
1746-NI8	High Resolution (8) Analog Input Module	-20…+20 mA (or) -10…+10V DC	page 22: General input specifications page 22: Input step response page 23: Current loop input specifications page 23: Voltage input specifications
1746-NI16I(1)	High Resolution (16) Analog Input Module	-20…+20 mA	page 25: General input specifications page 26: Module update times
1746-NI16V(1)	High Resolution (16) Analog Input Module	-10…+10V DC	
1746-NIO4I	High Resolution (2) Analog Input, (2) Analog Current Output Module	-20…+20 mA (or) -10…+10V DC (inputs) 0…20 mA (outputs)	page 19: General Input Specifications page 19: Current Loop Input Specifications page 20: Voltage Output Specifications
1746-NIO4V	High Resolution (2) Analog Input, (2) Analog Voltage Output Module	20…+20 mA (or) -10…+10V DC (inputs) -10…+10V DC (outputs)	
1746-FIO4I	(2) Fast Analog Input, (2) Analog Current Output Module	0…20 mA (or) 0…10V DC (inputs) 0…20 mA (outputs)	page 19: General Input Specifications page 19: Current Loop Input Specifications page 20: Voltage Input Specifications
1746-FIO4V	(2) Fast Analog Input, (2) Analog Voltage Output Module	0…20 mA	page 20: Output specifications
1746-NIO4I	(4) Analog Current Output Module	-10…+10V DC	page 20: Output specifications
1746-NIO4V	(4) Analog Voltage Output Module	0…20 mA	page 20: Output specifications
1746-NO8I	(8) Analog Current Output Module	-10…+10V DC	page 24: Output specifications
1746-NO8V	(8) Analog Voltage Output Module	-10…+10V DC	page 24: Output specifications

(1) Single-ended connections only.

4-Channel Analog I/O Modules

General Input Specifications for 4-Channel Modules

Specification	1746-NI4	1746-NIO4I	1746-NIO4V	1746-FIO4I	1746-FIO4V
Backplane current (mA) @ 5V	25 mA	55 mA	55 mA	55 mA	55 mA
Backplane current (mA) @ 24V	85 mA	145 mA	115 mA	150 mA	120 mA
Number of inputs	4	2	2	2	2
Backplane isolation	500V AC and 710V DC withstand for 1 minute				
Step response	60 ms			100 µs	

General Input Specifications for 4-Channel Modules

Specification	1746-NI4	1746-NIO4I	1746-NIO4V	1746-FIO4I	1746-FIO4V
Conversion method	sigma-delta modulation			successive approximation	
Converter resolution	16 bit			12 bit	
Conversion time	N/A			7.5 µs every 512 µs (nominal)	
Module throughput delay	512 µs (nominal)			1.10 ms (maximum)(1) 512 µs (typical)	

(1) Worst-case throughput occurs when the module just misses an event.

Current Loop Input Specifications for 4-Channel Modules

Specification	1746-NI4	1746-NIO4I	1746-NIO4V	1746-FIO4I	1746-FIO4V
Full scale	20 mA	20 mA	20 mA	20 mA	20 mA
Input range	±20 mA (nominal) ±30 mA (maximum)			0…20 mA (nominal) for 0…30 mA (maximum)	
Current input coding	±16,384 for ±20mA			0…2047 counts for 0…20 mA	
Absolute maximum input voltage	±7.5V DC or 7.5V AC RMS				
Input Impedance	250 Ω (nominal)			250 Ω (nominal)	
Resolution	1.22070 µA per LSB			9.7656 µA per bit	
Overall accuracy @ 25 °C (77 °F)	±0.365% of full scale			±0.510% of full scale	
Overall accuracy, 0…60 °C (32…140 °F)	±0.642% of full scale (maximum)			±0.850% of full scale	
Overall accuracy drift	+79 ppm/°C of full scale			+98 ppm/°C of full scale (maximum)	
Gain error @ 25 °C (77 °F)	+0.323% (maximum)			+0.400% (maximum)	
Gain error, 0…60 °C (32…140 °F)	+0.556% (maximum)			+0.707% of full scale	
Gain error drift	±67 ppm/°C			±89 ppm/°C (maximum)	

Voltage Input Specifications for 4-Channel Modules

Specification	1746-NI4	1746-NIO4I	1746-NIO4V	1746-FIO4I	1746-FIO4V
Full Scale	10V DC	10V DC	10V DC	10V DC	10V DC
Input Range	±10V DC -1 LSB			0…10V DC -1 LSB	
Input Impedance	1 MΩ				
Overvoltage Protection (IN+ to -IN)	220V DC or AC RMS continuously			220V dc or ac RMS continuously	
Resolution	305.176 µV per LSB			2.4414 mV per LSB (nominal)	
Voltage input coding	-32,768…+32,767 for +10V DC			0…4095 counts for 0…10V DC	
Overall accuracy @ 25 °C (77 °F)	±0.284% of full scale			±0.440% of full scale	
Overall Accuracy, 0…60 °C (32…140 °F)	±0.504% of full scale			±0.750% of full scale	

Voltage Input Specifications for 4-Channel Modules

Specification	1746-NI4	1746-NIO4I	1746-NIO4V	1746-FIO4I	1746-FIO4V
Overall accuracy drift (maximum)	+63 ppm/°C of full scale (maximum)			+88 ppm/°C (maximum)	
Gain error @ 25 °C (77 °F)	+0.263% (maximum)			+0.323% of full scale	
Gain error, 0…60 °C (32…140 °F)	+0.461% (maximum)			+0.530% of full scale	
Gain error drift	±57 ppm/°C			±79 ppm?/°C	

Output Specifications for 4-Channel Modules

Specification	1746-FIO4I	1746-NIO4I	1746-NO4I	1746-FIO4V	1746-NIO4V	1746-NO4V
Number of outputs	2	2	4	2	2	4
Backplane current (mA) @ 5V	55 mA	55 mA	55 mA	55 mA	55 mA	55 mA
Backplane current (mA) @ 24V	150 mA	145 mA	195 mA(1)	120 mA	115 mA	145 mA
Isolation voltage	Tested @ 500V AC and 710V DC for 60 seconds					
Full scale	21 mA			10V DC		
Output range (normal)	0…20 mA -1 LSB			±10V DC -1 LSB		
Output coding	0…32,764 for 0…21 mA			-32,768…+32,764 for ±10V DC		
Output resolution (per LSB)	2.56348 μA			1.22070 mV		
Converter resolution	14-bit			14-bit		
Conversion method	R-2R ladder			R-2R ladder		
Step response	2.5 ms (5…95%)			2.5 ms (normal)		
Load range	0…500 Ω			1K…? Ω		
Load current, max	N/A			10 mA		
Overrange capability	5% (0…21 mA -1 LSB)			N/A		
Overall accuracy @ 25 °C (77 °F)	±0.298% of full scale			±0.208% of full scale		
Overall Accuracy, 0…60 °C (32…140 °F)	±0.541% of full scale			±0.384% of full scale		
Overall accuracy drift, max	±70 ppm/°C of full scale			±0.384% of full scale		
Gain error @ 25 °C (77 °F)	±298% of full scale			±208% of full scale		
Gain Error, 0…60 °C (32…140 °F)	±516% of full scale			±374% of full scale		
Gain error drift, max	±62 ppm/°C of full scale			±47 ppm/°C of full scale		

(1) The 1746-NO4I and 1746-NO4V analog output modules have connections for user-supplied 24V dc power supplies. When external 24V DC power is used, the module only draws 5V DC current from the SLC backplane. If an external 24V DC power supply is required, the tolerance must be 24V ±10% (26.6…26.4V DC). The user power supplies for SLC 500 modular systems, 1746-P1, 1746-P2, 1746-P5, and 1746-P6 power supplies do not meet this specification.

8-Channel Input Modules

General Input Specifications for 1746-NI8

Specification	1746-NI8
Backplane current (mA) @ 5V	200 mA
Backplane current (mA) @ 24V	100 mA
Backplane power consumption	3.4 W maximum (1.0 W @ 5V DC, 2.4 W @ 24V DC)
Number of inputs	8
Converter resolution	16-bit
Type of input (selectable)	±10V DC 0…5V DC 0…20 mA ±20 mA 1…5V DC 0…10V DC 4…20 mA 0…1 mA
Type of data (selectable)	Engineering Units Scaled for PID Proportional Counts (-32,768…32,767 range) Proportional Counts (User-Defined Range, Class 3 only) 1746-NI4 Data Format
A/D conversion method	Successive approximation, switched capacitor
Input filter frequencies	1 Hz 2 Hz 5 Hz 10 Hz 20 Hz 50 Hz 75 Hz
Time to detect open circuit	1 module scan
Common mode voltage range	±10.5V (15V maximum between any two input signal terminals when connected in a single-ended configuration)
Isolation voltage	Tested @ 500V AC and 710V DC for 60 s
Module update time	0.75 ms per enabled channel
Channel turn-on time, max	101…107 ms
Channel turn-off time, max	1…7 ms
Channel reconsideration time, max	101…107 ms
Calibration	Module performs continuous autocalibration

Input Step Response for 1746-NI8

Filter Frequency	Step Response for 1746-NI8		
	1% Accuracy(1)	0.1% Accuracy(1)	0.05% Accuracy(1)
1 Hz	730 ms + module update time	1100 ms + module update time	1200 ms + module update time
2 Hz	365 ms + module update time	550 ms + module update time	600 ms + module update time
5 Hz	146 ms + module update time	220 ms + module update time	240 ms + module update time

Input Step Response for 1746-NI8

Filter Frequency	Step Response for 1746-NI8		
	1% Accuracy(1)	0.1% Accuracy(1)	0.05% Accuracy(1)
10 Hz	73 ms + module update time	110 ms + module update time	120 ms + module update time
20 Hz	36.5 ms + module update time	55 ms + module update time	60 ms + module update time
50 Hz	14.5 ms + module update time	22 ms + module update time	24 ms + module update time
75 Hz	10 ms + module update time	15 ms + module update time	18 ms + module update time
no filter	0.5 ms + module update time	0.75 ms + module update time	0.75 ms + module update time

(1) The module accuracy for current inputs is 0.05%, and for voltage inputs is 0.1%.

Current Loop Specifications for 1746-NI8

Attribute	Value
Current input, max	±30 mA
Input impedance	250 Ω
Input resolution	1 μA
Display resolution	1 μA
Overall module accuracy 0…60 °C (32…140 °F)	0…20 mA, 4…20 mA, ±20 mA: ±0.05% 0…1 mA: ±0.5%
Overall module accuracy drift	±12 ppm/°C
Gain error @ 25 °C (77 °F)	±0.025%, max
Gain error, 0…60 °C (32…140 °F)	±0.05%, max
Gain error drift	±12 ppm/°C
Overvoltage capability	7.5V AC RMS, max

Voltage Input Specifications for 1746-NI8

Attribute	Value
Voltage input, max	±30V between any two signal terminals
Input impedance	1M Ω
Input resolution	1 mV
Display resolution	1 mV
Overall module accuracy 0…60 °C (32…140 °F)	±0.1%
Overall module accuracy drift	±17 ppm/°C
Gain Error @ 25 °C (77 °F), max	±0.05%
Gain Error, 0…60 °C (32…140 °F), max	±0.1%
Gain error drift, max	±17 ppm/°C

8-Channel Output Modules

Optional 24V DC power supply must be N.E.C. Class 2.

Output Specifications for 8-Channel Modules

Catalog Number	1746-NO8I	1746-NO8V
Backplane current (mA) @ 5V	120 mA	120 mA
Backplane current (mA) @ 24V	250 mA	160 mA(1)
Backplane power consumption	5.6 W	5.6 W
Thermal dissipation, max	6.6 W	4.44 W
Isolation voltage	Tested @ 500V DC	Tested @ 500V DC
Number of outputs	8	8
Output type	Current	Voltage
Output range	0…21.5 mA	±10.25V DC
Output coding (proportional scaling)	0…32,767	-32,768…+32,767
Resolution	16-bit 366 nA/count	16-bit 320 μV/count
Non-Linearity	0.06% of full scale	
DAC conversion method	R-2R Ladder Network	
Output step response	1 ms (0…95% of full scale)	
Channel update time (typical)	Class 1: 5 ms to update all 8 channels Class 3: 10 ms to update all 8 channels	
Load range	0…500 Ω	1 kΩ and greater
Load current	N/A	10 mA, max
Output impedance	Greater than 1M Ω	Less than 1.0 Ω
Overrange capability	7.5% (21.5 mA)	2.5% (±10.25V)
Overall accuracy	0.1% of full scale @ 25 °C (77 °F) 0.2% of full scale @ 60 °C (140 °F)	
Overall accuracy drift, max	±33 ppm/°C of full scale	
Gain error	0.08% of full scale @ 25 °C (77°F) 0.15% of full scale @ 60 °C (140°F)	
Gain error drift, max	±25 ppm/°C of full scale	
Calibration	Factory calibrated.	

(1) J4 jumper set to RACK; 0 mA at 24V dc with J4 Jumper set to EXT.

16-Channel Input Modules

General Input Specifications for 16-Channel Modules

Attribute	1746-NI16I	1746-NI16V
Backplane current (mA) @ 5V	125 mA	125 mA
Backplane current (mA) @ 24V	75 mA	75 mA
Backplane power consumption	2.425 W max (0.625 W @ 5V DC, 1.8 W @ 24V DC)	2.425 W max (0.625 W @ 5V DC, 1.8 W @ 24V DC)
Isolation voltage	Tested @ 500V AC and 710V DC for 60 s	
Number of inputs	16	
Resolution	16-bit	
A/D conversion method	Sigma Delta	
Common mode voltage range	±10.25V relative to the analog common terminal (20.5V maximumbetween any two signal terminals)	±10.25V relative to the analog common terminal (20.5V maximum between any two signal terminals)
Input filter frequencies	6 Hz 10 Hz 20 Hz 40 Hz 60 Hz 80 Hz 100 Hz 250 Hz	6 Hz 10 Hz 20 Hz 40 Hz 60 Hz 80 Hz 100 Hz 250 Hz
Type of Input (selectable)	0…20 mA ±20 mA 4…20 mA 0…1 mA	±10V DC 0…5V DC 1…5V DC 0…10V DC
Type of data (selectable)	Engineering Units Scaled for PID Proportional Counts (-32,768…32,767 range) Proportional Counts (User-Defined Range, Class 3 only) 1746-NI4 Data Format	Engineering Units Scaled for PID Proportional Counts (-32,768…32,767 range) Proportional Counts (User-Defined Range, Class 3 only) 1746-NI4 Data Format
Input impedance	249 Ω	20 Ω
Maximum voltage input without damage	±8V between analog common and any input terminal	±30V between any two signal terminals
Current input (maximum)	±30 mA between analog common and any input terminal	±30 mA between analog common and any input terminal
Time to detect open circuit	less than 5 s	less than 5 s
Input resolution	640 nA	312 μV
Display resolution	0.3%	0.1%
Module error over full operating temperature range	0.08% of full scale @ 25 °C (77 °F) 0.15% of full scale @ 60 °C (140 °F)	0.08% of full scale @ 25 °C (77 °F) 0.15% of full scale @ 60 °C (140 °F)
Input offset drift with temperature	360 nA/°C	90 μV/°C
Gain drift with temperature	20 ppm/°C	15 ppm/°C
Calibration accuracy @ 25 °C	better than 0.15% of range	better than 0.05% of range
Calibration	Factory calibrated.	

Module update time is dependent on the number of channels enabled and the filter frequency, as illustrated in the table below.

Module Update Times for 1746-NI16I and 1746-NI16V

Filter Frequency	Module Update Time(1)			
	16 Channels Enabled	12 Channels Enabled	8 Channels Enabled	4 Channels Enabled
6 Hz	630 ms	473 ms	314 ms	7 ms
10 Hz	380 ms	285 ms	190 ms	4 ms
20 Hz	194 ms	145 ms	96 ms	4 ms
40 Hz	100 ms	75 ms	50 ms	4 ms
60 Hz	69 ms	52 ms	34 ms	4 ms
80 Hz	54 ms	39 ms	26 ms	4 ms
100 Hz	37 ms	27 ms	18 ms	4 ms
250 Hz	18 ms	13 ms	9 ms	4 ms

(1) Assuming all of the enabled channels have the filter frequency shown in the first column.

Temperature Modules

SLC 500 Thermocouple/mV Input Modules

All modules interface to thermocouple types J, K, T, E, R, S, B, and N, and also accept millivolt signals that standard analog modules are not able to detect. The 1746-INT4 module also interfaces with thermocouple types C and D.

All modules provide fully-integrated cold-junction compensation (CJC) to retain thermocouple input signal accuracy, a choice of input filter frequencies, as well as fault diagnostics and status LEDs.

Note: Block transfers are required in a remote I/O configuration, using a 1747-ASB module with a PLC.

Thermocouple Module Specifications

Attribute	1746-NT4	1746-NT8	1746-INT4
Backplane current (mA) @ 5V	60 mA	120 mA	110 mA
Backplane current (mA) @ 24V	40 mA	70 mA	85 mA
Number of inputs	4 plus a CJC sensor	8 plus a CJC sensor	4 plus a CJC sensor
Input type	Thermocouple Types J, K, T, E, R, S, B, N Millivolt Input Ranges ±50 mV and ±100 mV		Thermocouple Types J, K, T, E, R, S, B, N, C, D Millivolt Input Ranges ±50 mV and ±100 mV
Filter frequency	10 Hz, 50 Hz, 60 Hz, 250 Hz		low pass digital filter corner frequency of 8 Hz
Input step response (95% of final value)	50 ms @ 60 Hz	80 ms @ 60 Hz	600 ms @ 8 Hz
Temperature units	°C or °F		

Thermocouple Module Specifications

Attribute	1746-NT4	1746-NT8	1746-INT4
Data formats	Raw/Proportional, Engineering Units, Engineering Units x 10, Scaled-for-PID		
Calibration	Autocalibration on channel enable and on a configuration change between channels.	Autocalibration at power-up and approximately every 2 minutes afterward.	Calibrate via ladder program once a year, as required.
Isolation	500V DC transient between inputs and chassis ground, and between inputs and backplane. 2V DC continuous between channels (series B or later).	500V DC transient between inputs and chassis ground, and between inputs and backplane. 12.5V DC continuous between channels.	1000V DC transient or 150V AC continuous channel-to-channel or channel-to-backplane.

The module update time is calculated by summing all the enabled Channel Sampling Times plus the CJC Update Time.

Module Update Time for 1746-NT4 and 1746-NT8

Catalog Number	CJC Update Time	Channel Sampling Time per Channel			
		250 Hz Filter	60 Hz Filter	50 Hz Filter	10 Hz Filter
1746-NT4	14 ms	12 ms	50 ms	60 ms	300 ms
1746-NT8(1)	290 ms	66 ms	125 ms	140 ms	470 ms

(1) The sampling times for filter frequencies listed do not include a 45 ms open-circuit detection.

Module Update Time and Step Response for 1746-INT4

Corner frequency	50/60 Hz NMR	Filter Time	Update Time	Step Response (worst)
8 Hz	50…60 dB	180 ms	400 ms	600 ms

Thermocouple Temperature Ranges

Input	Temperature Range for All Modules		Accuracy max. error @ +25 °C (+77 °F)		
	°C	°F	1746-NT4	1746-NT8	1746-INT4
J	-210…760 °C	-346…1400 °F	±1.06 °C (±1.91 °F)	±1.4 °C (±2.52 °F)	±1.6 °C (±2.88 °F)
K	-270…1370 °C	-454…2498 °F	±1.72 °C (±3.10 °F)	±1.5 °C (±2.7 °F)	±3.8 °C (±6.84 °F)
T	-270…400 °C	-454…752 °F	±1.43 °C (±2.57 °F)	±1.3 °C (±2.34 °F)	±2.05 °C (±3.69 °F)
B	-300…1820 °C	-572…3308 °F	±0.73 °C (±1.3 °F)	±1.0 °C (±1.8 °F)	±2.4 °C (±4.32 °F)
E	-270…1000 °C	-454…1832 °F	±1.39 °C (±2.5 °F)	±1.3 °C (±2.34 °F)	±1.79 °C (±3.23 °F)
R	0…1768 °C	32…3214 °F	±3.59 °C (±6.46 °F)	±3.6 °C (±6.48 °F)	±2.23 °C (±4.02 °F)
S	0…1768 °C	32…3214 °F	±3.61 °C (±6.5 °F)	±3.4 °C (±6.12 °F)	±2.38 °C (±4.29 °F)
N	0…1300 °C	32…2372 °F	±3.12 °C (±5.62 °F)	±2.7 °C (±4.86 °F)	±3.83 °C (±6.90 °F)
C(1)	0…2317 °C	32…4201 °F	N/A	N/A	±2.38 °C (±4.11 °F)
D(1)	0…2317 °C	32…4201 °F	N/A	N/A	±2.52 °C (±4.54 °F)
CJC Sensor	0…85 °	32…185 °F	N/A	N/A	N/A

(1) Thermocouple type only available with 1746-INT4 module.

DC Millivolt Input Ranges for 1746-NT4, 1746-NT8, and 1746-INT4 Modules

Input Type	Range	Accuracy @ 25 °C (77 °F)
±50 mV	-50 mV dc…+50 mV DC	50 µV
±100 mV	-100 mV DC…+100 mV DC	50 µV

RTD Input Modules

The RTD modules interface with platinum, nickel, copper, and nickel-iron RTDs, and with variable resistance devices such as potentiometers (0 to 3000Ù maximum). The module provides on-board RTD temperature scaling in degrees Celsius and degrees Fahrenheit or resistance scaling in ohms.

TIP Block transfers are required in a remote I/O configuration, using a 1747-ASB with a PLC.

RTD/Resistance Input Modules

Attribute	1746-NR4	1746-NR8
Backplane current (mA) @ 5 V	50 mA	100 mA
Backplane current (mA) @ 24V	50 mA	55 mA
Number of inputs	4	8
Input type	100 Ω Platinum (385) 200 Ω Platinum (385) 500 Ω Platinum (385) 1000 Ω Platinum (385) 100 Ω Platinum (3916) 200 Ω Platinum (3916) 500 Ω Platinum (3916) 1000 Ω Platinum (3916) 10 Ω Copper (426) 120 Ω Nickel (618) 120 Ω Nickel (672) 604 Ω Nickel-Iron (518) 150 Ω Resistance Input 500 Ω Resistance Input 1000 Ω Resistance Input 3000 Ω Resistance Input	
Temperature scale (selectable)	1 °C or 1 °F and 0.1 °C and 0.1 °F	
Resistance scale (selectable)	1 or 0.1 Ω for all resistance ranges; or 0.1 Ω or 0.01 Ω for 150 Ω potentiometer	
Filter frequency (selectable filter)	10 Hz 50 Hz 60 Hz 250 Hz	28 Hz 50/60 Hz 800 Hz 6400 Hz
RTD excitation current (Two current values are user-selectable)	0.5 mA(1) 2.0 mA(2)	0.25 mA(1) 1.0 mA(2)
Open-circuit or short-circuit detection	Zero, upscale or downscale	
Maximum cable impedance	25 Ω maximum per 308.4 m (1000 ft)	
Data formats	Raw/Proportional, Engineering Units, Engineering Units x 10, Scaled-for-PID	
Calibration	Autocalibration at powerup and when a channel is enabled	Autocalibration at powerup and user-enabled periodic calibration

RTD/Resistance Input Modules

Attribute	1746-NR4	1746-NR8
Isolation voltage, channel-to-channel	None	±5V
Isolation voltage, input to backplane	500V AC for 1 minute	
Common mode voltage separation	±1V maximum	

(1) Cannot use for 10 Ω Copper RTD. Recommended for use with higher resistance ranges for both RTDs and direct response inputs (1000 Ω RTDs and 3000 Ω resistance input). Contact the RTD manufacturer for recommendations.

(2) Must use for 10 Ω Copper RTD. Recommended for use with all other RTD and direct resistance inputs, except 1000 Ω RTDs and 3000 Ω resistance ranges. Contact RTD manufacturer for recommendations.

RTD Channel Step Response for 1746-NR4 and 1746-NR8

1746-NR4					1746-NR8				
Filter Frequency	50 Hz NMR	60 Hz NMR	Cut-off Frequency	Step Response	Filter Frequency	50 Hz NMR	60 Hz NMR	Cut-off Frequency	Step Response
10 Hz	100 dB		2.62 Hz	300 ms	28 Hz	110 dB	95 dB	7.8 Hz	120 ms
50 Hz	100 dB	–	13.1 Hz	60 ms	50/60 Hz	65 dB		13.65 Hz	68.6 ms
60 Hz	–	100 dB	15.72 Hz	50 ms	800 Hz	–	–	209.8 Hz	3.75 ms
250 Hz	–	–	65.5 Hz	12 ms	6400 Hz	–	–	1677 Hz	1.47 ms

Update Time for 1746-NR4 and 1746-NR8

1746-NR4		1746-NR8		
Filter Frequency	Channel Scan Time(1)	Filter Frequency	Channel Scan Time	With Lead Resistance Measurement
10 Hz	305 ms	28 Hz	125 ms	250 ms
50 Hz	65 ms	50/60 Hz	75 ms	147 ms
60 Hz	55 ms	800 Hz	10 ms	18 ms
250 Hz	17 ms	6400 Hz	6 ms	10 ms

(1) The module-scan time is obtained by summing the channel-scan time for each enabled channel. For example, if 3 channels are enabled and the 50 Hz filter is selected, the module-scan time is 3 x 65 ms = 195 ms.

RTD Temperature Range and Accuracy Specifications

RTD Type		1746-NR4				1746-NR8			
		0.5 mA Excitation		2.0 mA Excitation		0.25 mA Excitation		1.0 mA Excitation	
		Temp. Range	Accuracy(1)	Temp. Range	Accuracy(1)	Temp. Range	Accuracy(1)	Temp. Range	Accuracy(1)
Platinum (385)	100 Ω	-200…850 °C -328…1562 °F	±1.0 °C(2) ±2.0 °F	-200…850 °C -328…1562 °F	±0.5 °C ±0.9 °F	-200…850 °C -328…1562 °F	±0.5 °C ±0.9 °F	-200…850 °C -328…1562 °F	±0.7 °C ±1.3 °F
	200 Ω	-200…850 °C -328…1562 °F	±1.0 °C(2) ±2.0 °F	-200…850 °C -328…1562 °F	±0.5 °C ±0.9 °F	-200…850 °C -328…1562 °F	±0.6 °C ±1.1 °F	-200…850 °C -328…1562 °F	±0.7 °C ±1.3 °F
	500 Ω	-200…850 °C -328…1562 °F	±0.6 °C ±1.1 °F	-200…850 °C -328…1562 °F	±0.5 °C ±0.9 °F	-200…850 °C -328…1562 °F	±0.7 °C ±1.3 °F	-200…370 °C -328…698 °F	±0.5 °C ±0.9 °F
	1000 Ω	-200…850 °C -328…1562 °F	±0.6 °C ±1.1 °F	-200…240 °C -328…464 °F	±0.5 °C ±0.9 °F	-200…850 °C -328…1562 °F	±1.2 °C ±2.2 °F	-200…50 °C -328…122 °F	±0.4 °C ±0.7 °F

RTD Temperature Range and Accuracy Specifications

RTD Type		1746-NR4				1746-NR8			
		0.5 mA Excitation		2.0 mA Excitation		0.25 mA Excitation		1.0 mA Excitation	
		Temp. Range	Accuracy(1)	Temp. Range	Accuracy(1)	Temp. Range	Accuracy(1)	Temp. Range	Accuracy(1)
Platinum (3916)	100 Ω	-200…630 °C -328…1166 °F	±1.0 °C(2) ±2.0 °F	-200…630 °C -328…1166 °F	±0.4 °C ±0.7 °F	-200…630 °C -328…1166 °F	±0.4 °C ±0.7 °F	-200…630 °C -328…1166 °F	±0.6 °C ±1.1 °F
	200 Ω	-200…630 °C -328…1166 °F	±1.0 °C(2) ±2.0 °F	-200…630 °C -328…1166 °F	±0.4 °C ±0.7 °F	-200…630 °C -328…1166 °F	±0.5 °C ±0.9 °F	-200…630 °C -328…1166 °F	±0.6 °C ±1.1 °F
	500 Ω	-200…630 °C -328…1166 °F	±0.5 °C ±0.9 °F	-200…630 °C -328…1166 °F	±0.4 °C ±0.7 °F	-200…630 °C -328…1166 °F	±0.6 °C ±1.1 °F	-200…370 °C -328…698 °F	±0.4 °C ±0.7 °F
	1000 Ω	-200…630 °C -328…1166 °F	±0.5 °C ±0.9 °F	-200…230 °C -328…446 °F	±0.4 °C ±0.7 °F	-200…630 °C -328…1166 °F	±0.9 °C ±1.6 °F	-200…50 °C -328…122 °F	±0.3 °C ±0.6 °F
Copper (426)	10 Ω	Not Allowed		-100…260 °C -148…500 °F	±0.6 °C ±1.1 °F	-100…260 °C -148…500 °F	±0.5 °C ±0.9 °F	-100…260 °C -148…500 °F	±0.8 °C ±1.4 °F
Nickel (618)	120 Ω	-100…260 °C -148…500 °F	±0.2 °C ±0.4 °F	-100…260 °C -148…500 °F	±0.2 °C ±0.4 °F	-100…260 °C -148…500 °F	±0.2 °C ±0.4 °F	-100…260 °C -148…500 °F	±0.2 °C ±0.4 °F
Nickel (672)	120 Ω	-80…260 °C -112…500 °F	±0.2 °C ±0.4 °F	-80…260 °C -112…500 °F	±0.2 °C ±0.4 °F	-80…260 °C -112…500 °F	±0.2 °C ±0.4 °F	-80…260 °C -112…500 °F	±0.2 °C ±0.4 °F
Nickel/Iron (518)	604 Ω	-100…200 °C -148…392 °F	±0.3 °C ±0.5 °F	-100…200 °C -148…392 °F	±0.3 °C ±0.5 °F	-200…200 °C -328…392 °F	±0.3 °C ±0.5 °F	-200…170 °C -328…338 °F	±0.3 °C ±0.5 °F

(1) The accuracy values assume that the module was calibrated within the specified temperature range of 0…60 °C (32…140 °F).

(2) Module accuracy using 100 Ω or 200 Ω platinum RTDs with 0.5 excitation current depends on the following criteria:
(a) Module accuracy is ±0.6 °C after you apply power to the module or perform an autocalibration at 25 °C (77 °F) ambient with the module operating temperature at 25 °C (77 °F).
(b) Module accuracy is ±(0.6 °C + DT x 0.034 °C/°C) after you apply power to the module or perform an autocalibration at 25 °C (77 °F) ambient with the module operating temperature between 0…60 °C (32…140 °F). DT is the temperature difference between the actual operating temperature of the module at 25 °C (77 °F) and 0.034 °C/°C is the temperature drift shown in the table for 100 Ω or 200 Ω platinum RTDs.
(c) Module accuracy is ±1.0 °C after you apply power to the module or perform an autocalibration at 60 °C (140 °F) ambient with the module operating temperature at 60 °C (140 °F).

1746-NR4 Resistance Input Specifications

Resistance	0.5 mA Excitation			0.25 mA Excitation			Resolution	Repeatability
	Resistance Range	Accuracy(1)	Temperature Drift	Resistance Range	Accuracy(1)	Temperature Drift		
150 Ω	0 Ω…150 Ω	±0.2 Ω	±0.006 Ω/°C ±0.003 Ω/°F	0 Ω…150 Ω	±0.15 Ω	±0.004 Ω/°C ±0.002 Ω/°F	0.01 Ω	±0.04 Ω
500 Ω	0 Ω…500 Ω	±0.5 Ω	±0.014 Ω/°C ±0.008 Ω/°F	0 Ω…500 Ω	±0.5 Ω	±0.014 Ω/°C ±0.008 Ω/°F	0.1 Ω	±0.2 Ω
1000 Ω	0 Ω…1000 Ω	±1.0 Ω	±0.029 Ω/°C ±0.016Ω/°F	0 Ω…1000 Ω	±1.0 Ω	±0.029 Ω/°C ±0.016 Ω/°F	0.1 Ω	±0.2 Ω
3000 Ω	0 Ω…3000 Ω	±1.5 Ω	±0.043 Ω/°C ±0.024 Ω/°F	0 Ω…1900 Ω	±1.5 Ω	±0.043 Ω/°C ±0.024 Ω/°F	0.1 Ω	±0.2 Ω

(1) The accuracy values assume that the module was calibrated within the specified temperature range of 0…60 °C (32…140 °F).

1746-NR8 Resistance Input Specifications

Resistance	0.5 mA Excitation			0.25 mA Excitation			Resolution	Repeatability
	Resistance Range	Accuracy(1)	Temperature Drift	Resistance Range	Accuracy(1)	Temperature Drift		
150 Ω	0 Ω…150 Ω	±0.2 Ω	±0.004 Ω/°C ±0.002 Ω/°F	0 Ω…150 Ω	±0.15 Ω	±0.003 Ω/°C ±0.002 Ω/°F	0.01 Ω	±0.04 Ω
500 Ω	0 Ω…500 Ω	±0.5 Ω	±0.012 Ω/°C ±0.007 Ω/°F	0 Ω…500 Ω	±0.5 Ω	±0.012 Ω/°C ±0.007 Ω/°F	0.1 Ω	±0.2 Ω
1000 Ω	0 Ω…1000 Ω	±1.0 Ω	±0.025 Ω/°C ±0.014Ω/°F	0 Ω…1000 Ω	±1.0 Ω	±0.025 Ω/°C ±0.014 Ω/°F	0.1 Ω	±0.2 Ω
3000 Ω	0 Ω…1200 Ω	±1.5 Ω	±0.040 Ω/°C ±0.023 Ω/°F	0 Ω…1200 Ω	±1.5 Ω	±0.040 Ω/°C ±0.023 Ω/°F	0.1 Ω	±0.2 Ω

(1) The accuracy values assume that the module was calibrated within the specified temperature range of 0…60 °C (32…140 °F).

Counter I/O Modules

1746-HSCE High Speed Counter

This module offers a single bidirectional counting channel, which supports quadrature, pulse/direction, or up/down counter input. Four on-board open collector outputs allow module control independent of the SLC processor scan. The module features three modes of operation: Range, Rate, and Sequencer.

TIP The 1747-ASB module is not compatible with the 1746-HSCE module.

1746-HSCE2 Multi-Channel High Speed Counter

The Multi-Channel High Speed Counter provides two sets of ±A, ±B, and ±Z input channels, allowing up to two quadrature, differential line driver, or incremental encoders to be monitored. A and B input channels can also be configured to count single-ended pulse inputs from up to four input devices.

The module supports three operating modes that provide two, three, or four-channel operation. System performance is enhanced with the module's ability to accept control adjustments while it is actively counting pulses. The Z/gate input channel can be used for storing, holding, and resetting counter data.

High Speed Counter Specifications

Attribute	1746-HSCE	1746-HSCE2
Number of inputs	1 set ±A, ±B, ±Z differential or single-ended inputs, 5V DC, 12V DC, or 24V DC	2 sets ±A, ±B, ±Z, 2 quadrature encoders, or 4 pulse differential or single-ended inputs
Input voltage range	Differential: 0…5V DC Single-ended: ±5V DC 5V DC: 3.8…5.5V DC 12V DC: 9.4…16.5V DC 24V DC: 16.5…30V DC	5V DC: 4.2…12V DC 24V DC: 10…30V DC
Frequency	50 kHz for range 32 kHz for rate 50 kHz for sequencer	250 kHz @ X4 500 kHz @ X2 1 MHz for all other
Maximum Counts	16-bit, ±32,768	24-bit, ±8,388,607 in Class 4 16-bit, ±32,768 in Class 1
Throughput	Sequencer mode: 1.8 ms Range mode: 3.9 ms	700 µs (typical)
Number of outputs	4 open-collector outputs: 5, 12, or 24V DC	4 outputs: 5…30V DC sourcing with electronic protection
Maximum output current	16 mA @ 4.5V DC 40 mA @ 10V DC 125 mA @ 30V DC	1 A
Backplane current (mA) @ 5V	320 mA	250 mA
Backplane current (mA) @ 24V	0 mA	0 mA
Isolation voltage	Tested @ 1500V	Tested @ 1000V

Process Control Modules

Blow Molding Module

This module features four independent axes of PID control plus one discrete I/O pair per channel for channel synchronization. The 1746-BLM module provides 256 points of resolution for each parison channel with interpolation, and has loop update times of 100 microseconds. Configurations include accumulator push-out control and three parison axis, and two accumulator push-outs and two parison axis.

The module is designed to work in a variety of applications, including accumulator machines, continuous extrusion machines, and reciprocating screw machines. The module performs its servo control task independently from the processor, but receives its configuration and run-time information from the processor.

Blow Molding Module Specifications

Atttibutes	1746-BLM
Common Specifications	
Backplane current (mA) @ 5V	110 mA
Resolution	14 bits
Isolation voltage	Tested @ 500V DC for 60 s

Blow Molding Module Specifications

Atttibutes	1746-BLM
Conversion rate	10 kHz
Number of inputs	4 Digital 4 Analog
Number of outputs	4 Digital 4 Analog 1 Excitation
Analog Inputs	
Differential input range	±10V DC
Common mode input range	±200V DC
Differential impedance	800 kΩ
Common mode impedance	400 kΩ
Overvoltage protection	±500V
Analog Output	
Output voltage range	±10V
Maximum continuous current	1 mA
Short circuit current	<20 mA
Digital Input	
Type	Optocoupler
Input voltage range	0…30V DC
Minimum ON state voltage	22V DC
Minimum OFF state voltage	22V DC
Maximum input current (@ 30V DC)	7 mA
Protection	Polarity Reversal
Digital Output	
Type	Open Collector
Maximum OFF state voltage	30V DC
Excitation Output	
Output voltage	±10V DC
Source	Axis 0 A/D reference
Maximum continuous current	2 mA (10 kΩ linear pot)
Short circuit current	<20 mA
Short circuit duration (single ouput)	Indefinite

Barrel Temperature Module

This module provides four zones of Autotuned PID heat/cool temperature control. Each input functions as the process variable (PV) for a PID loop. The PID algorithm and tuning-assisted process (TAP) algorithm are performed on the module for each of the loops. The control variable (CV) output of each loop, either analog or timeproportioned

output (TPO), is sent from the module to the SLC data table. Your application logic must access the CV value in the data table and send the analog or TPO data to an output module to close the loop. The module is compatible with SLC 5/02 and higher processors.

Barrel Temperature Module Specifications

Atttibutes	1746-BTM
Number of inputs	4 Backplane and Channel-to-Channel Isolated
Thermocouple inputs	B, C, D, E, J, K, N, R, S, or T
Input voltage	-50…50mV and -100…100mV
A/D conversion method	Sigma-Delta modulation
Input filtering	Analog filter with low-pass digital filter
Normal mode rejection	> 50 dB @ 50 Hz > 60 dB @ 60 Hz
Common mode rejection	> 120 dB @ 50/60 Hz with 1 kΩ imbalance
Channel bandwidth (-3dB)	8 Hz
Resolution	16-bit resolution or 15-bit plus sign
Data Format	16-bit signed integer (natural binary)
Backplane current (mA) @ 5V	110 mA
Backplane current (mA) @ 24V	85 mA
Isolation voltage	Tested @ 1000V AC for 60 s

Motion Control Modules

Stepper Control Module

The 1746-HSTP1 is a single-axis stepper controller capable of providing up to 250 kHz pulse train output for micro-stepping applications. The module can interface directly with a quadrature encoder to monitor position. Built-in loop back diagnostics provide monitoring of pulse train commands. Programmable modes of operation eliminate the need to set DIP switches.

Stepper Control Module Specifications

Atttibutes	1746-HSTP1
Backplane Current (mA) @ 5V	200 mA
Inputs	5V DC differential encoder, or 12/24V DC single-ended auxiliary
Input frequency, max.	250 kHz
Outputs	Digital output for translator
Module Update Time	4 ms
Pulse train switching	7…30 mA @ 5V DC
Acceleration	2…2500 pulses per second2 Trapezoidal velocity profile

Servo Control Module

The 1746-HSRV servo control module is a single-axis, closed-loop servo controller which can be operated with a variety of SLC 500 processors and features block execution independent of the scan time of the processor. For fast and accurate control, the module monitors encoder feedback up to 300 kHz.

Ladder logic controls all of the motion. Complicated moves are accomplished using blended motion profiles stored in the module's internal memory and can be executed repeatedly. The profiles are stored as a series of absolute moves, and additional moves or homing operations can be performed between blended moves. The module can reset the absolute position when an encoder marker pulse is detected.

Servo Control Module Specifications

Attribute	1746-HSRV
Backplane current (mA) @ 5V	300 mA
Number of inputs	3 general purpose local fast inputs
Input frequency, max.	300 kHz @ 0° quadrature error
Outputs	1 general purpose local fast output
Module update time	2 ms

Positioning Modules

Open-Loop Velocity

This module provides an ideal control strategy for simple hydraulic applications. It can accelerate and decelerate the hydraulic ram, using as many as seven extend and seven retract segments.

Compatible LDTs are:

- Balluff BTL-2-L2 or -M2
- Gemco Quick-Stick II
- Santest GYRP or GYRG
- Temposonics II with DPM or RPM

1746-QV Specifications

Attribute	1746-QV
Number of inputs	1
Number of outputs	1
Backplane current (mA) @ 5V	250 mA
Voltage category	Temposonics II (DPM & RPM) or Balluff (BTL-2-L2 & M2) -10V DC…10V DC

1746-QV Specifications

Attribute	1746-QV
Independent power source requirement	0.400 mA @ +15V DC and 0.295 A @ -15V DC (typical but not LDT-dependent)
LDT Inputs	Interrogate Gate 15V Dc PS PS Common Shield/Frame
Module resolution and range	160 in ±0.01 in.
Analog output	0…10V DC @ 250 mA or -10…+10V DC @ 250 mA
Accuracy of voltage output	within ±1% of its programmed value
Module update time	2 ms

Synchronized Axes Module

This module offers four axes of closed-loop servo positioning control, using internal logic to synchronize multiple axes. The 1746-QS features a differential interface to either pulse-width modulated (DPM) or start/stop pulse (RPM) linear displacement transducer (LDT) inputs.

Compatible LDTs are:

- Balluff BTL-2-L2 or -M2
- Gemco Quick-Stick II
- Santest GYRP or GYRG
- Temposonics II with DPM or RPM

Use the 1492-AIFMQS interface module and the 1492-ACABLExxQ (xx = cable length) pre-wired cable with the 1746-QS module. The 1492-AIFMQS interface module is required for CE certification.

1746-QS Specifications

Attribute	1746-QV
Number of inputs	4
Number of outputs	4
Backplane current (mA) @ 5V	1000 mA
Backplane current (mA) @ 5V	200 mA
Voltage category	Input: LDT with RPM or DPM Output: -10V DC…10V DC
Analog output	-10…10V DC @ 5 mA
Output resolution	12-bit
Module update time	2 ms

1746-QS Specifications

Attribute	1746-QV
Fail-safe timers	Drive Output Disable: 15 µs Software Reset: 30 ms
LDT range and resolution	2.30 in. @ 0.004 in. 120 in. @ 0.002 in. 60 in. @ 0.001 in.
Module cable connections	I/O to IFM: -DB-26 subminiature (1492-ACABLE) Configuration/Diagnostics: -DB-9 (1746-CP3)
LDT Cable Length	RPM type: 45.7 m (150 ft) DPM type: 61.0 (200 ft)

BASIC Language Modules

The BASIC modules add data collection and report generation capability to any SLC system. Two configurable channels enable you to connect to printers, operator interface terminals, modems, and other foreign devices.

The 1746-BAS-T module is a higher-speed version of the 1746-BAS module with identical hardware features. The modules can be interchanged, except that the 1746-BAS-T module uses different (optional) memory modules.

The modules program in the BASIC language using an ASCII terminal or 1747-PBASE programming software. Because the 1746-BAS-T module can execute a BASIC program four times faster than the 1746-BAS module, programs written originally for the 1746-BAS module may require adjustment for identical operation on a 1746-BAST module.

BASIC Language Modules Catalog Numbers and Specifications

Attribute		1746-BAS	1746-BAS-T
Memory Size		24 Kbytes battery-backed RAM	
Optional Memory Modules		1747-M1 1747-M2	1771-DBMEM1 1771-DBMEM2
Power supply loading	5V DC	0.150	
	24V DC	0.040(1) (2)	
Port configuration	PRT1	RS-232/423, RS-422, RS-485	
	PRT2	RS-232/423, RS-422, RS-485	
	DH-485	DH-485	
Port isolation	Backplane to PRT1	710V DC for 1 minute	
	Backplane to PRT2	710V DC for 1 minute	
	PRT1 to PRT2	710V DC for 1 minute	

BASIC Language Modules Catalog Numbers and Specifications

Attribute		1746-BAS	1746-BAS-T
Maximum communication distance	RS-232 (300…19200 bps)	15 m (50 ft)	
	RS-423 (300 bps)	1230 m (4000 ft)	
	RS-423 (600 bps)	920 m (3000 ft)	
	RS-423 (1200 bps)	770 m (2500 ft)	
	RS-423 (4800 bps)	245 m (800 ft)	
	RS-423 (9600 bps)	120 m (400 ft)	
	RS-423 (19200 bps)	60 m (200 ft)	
	RS-422 (300…19200 bps)	1230 m (4000 ft)	
	RS-485 (300…19200 bps)	1230 m (4000 ft)	
Data Transfer	SLC 5/01	8 input words (SLC input image table) 8 output words (SLC output image table)	
	SLC 5/02 and higher	8 input words (SLC input image table) 8 output words (SLC output image table) 64 input and 64 output words (SLC M0/M1 file)	
Data Rates		300…19,200 baud	
Modem support		DF1 half-duplex slave or full duplex	
Clock/calendar accuracy		±1 minute/month @ 25 °C (77 °F) 0, -6 minutes/month @ 60 °C (140 °F)	

(1) If the BASIC Module DH-485 channel is connected to a 1747-AIC Link Coupler, add 0.085 A to the BASIC module's power supply loading value @ 24V DC.

(2) If the BASIC Module is connected to any device (for example, DTAM) either directly or through a 1747-AIC Link Coupler, add the appropriate current loading for the device to the BASIC module's power supply loading value @ 24V DC.

Windows-compatible BASIC Module Interface Software (1747-WINBAS)

BASIC Software is a terminal emulation program specifically written for you to interface to a Rockwell Automation 1746-BAS, 1746-BAS-T, or 1771-DB BASIC module. BASIC software simplifies the uploading and downloading of BASIC module programs, as well as backing up and restoring complete module images. BASIC software also provides debugging tools to aid in troubleshooting BASIC programs while online.

As a terminal emulation program, BASIC software requires either one RS-232 serial COM port or a DH-485 interface (1784-PCMK, 1784-PKTX, 1784-PKTXD, or 1747-UIC converter) be available on the personal computers. Bridging to the DH-485 network from other networks is not supported.

BASIC software works on personal computers with Windows 98, 2000, NT, and XP operating systems. RSLinx Classic OEM software must be installed on the personal computer to communicate to the 1746-BAS module via the DH-485 interface.

BASIC Development Software (1747-PBASE)

BASIC Development Software, an optional DOS-based software package, provides a structured and efficient means to create and debug BASIC programs. It uses the personal computer to facilitate editing, compiling, uploading, and downloading of BASIC programs. The PC requires 640 Kbytes of RAM, a fixed disk drive with 2 Mbytes of free disk space, and DOS version 3.1 or later.

Bulletin 1492 Wiring Options

Wiring systems consist of interface modules (IFM) and pre-wired cables that replace the terminal blocks and up to 50% of the point-to-point wiring between the SLC 500 and field devices. Pre-wired cables connect directly to the IFM and have the Removable Terminal Blocks (RTBs) of most 24V ac/dc and 120V ac 16- and 32- channel 1746 discrete I/O modules. The IFMs allow you to conveniently incorporate 1, 2, or 3 wiring terminals per I/O point, field-side voltage indicating LEDs, and/or output fuse protection. I/O module-ready cables, with a pre-wired 1746 RTB on one end and free conductors on the other, are also available for use with standard terminal blocks.

For the most up-to-date listing of IFMs and pre-wired cables, see www.rockwellautomation.com.

To find the interface module and cable for specific I/O modules using the following tables, follow these steps:

1. Locate I/O module required. The top row in each table indicates the I/O module for the I/O platform.
2. Locate the Interface Module Cat. No. column in the appropriate table.
3. Determine whether the interface module can be used with the I/O module, indicated by a letter code in the appropriate Cat. No. column.
4. Build the Pre-Wired Cable catalog number: 1492-CABL_ _ _Letter Code.
   - The Letter Code in the table cell represents the suffix of the pre-wired cable catalog number.
     For example: 1492-CABLE_ _ _A.
   - Specify cable length. Standard Lengths are 0.5 m, 1.0 m, 2.5 m, and 5.0 m. Replace the _ _ _ with 005, 010, 025, or 050, respectively, to indicate the length. For example: 1492-CABLE010A = a 1.0 m cable with Letter Code A.

Feed-through 20-Terminal IFMs

Description	Cat. No.	I/O Module Catalog Number 1746-																		
		IA 16	IB 16	IC 16	IG 16	IH 16	IM 16	IN 16	ITB 16	ITV 16	IV 16	OA 16	OB 16	OB 16E	OBP 16	OG 16	OV 16	OVP 16	OW 16	OX 8
Standard 264V AC/DC max	1492-IF M20F	A	B	E	B	B	A	B	B	B	B	C	E	E	E	E	E	E	D	D
Narrow standard 132V AC/DC max.	1492-IF M20FN	A	B	E	B	B	–	B	B	B	B	C	E	E	E	E	E	E	N	N
Extra terminals (2 per I/O) 264V AC/DC max.	1492-IF M20F-2	A	B	E	B	B	A	B	B	B	B	C	E	E	E	E	E	E	D	–
3-wire sensor type input devices 132V AC/DC max	1492-IF M20F-3	A	B	E	B	B	–	B	B	B	B	–	–	–	–	–	–	–	–	–

LED Indicating 20-Terminal IFMs

Description	Cat. No.	I/O Module Catalog Number 1746-																		
		IA 16	IB 16	IC 16	IG 16	IH 16	IM 16	IN 16	ITB 16	ITV 16	IV 16	OA 16	OB 16	OB 16E	OBP 16	OG 16	OV 16	OVP 16	OW 16	OX8
Standard with 24V AC/DC LEDs	1492-IF M20D24	–	B	–	–	–	–	B	B	B	B	–	E	E	E	–	E	E	D	–
Narrow standard with 24V AC/DC LEDs	1492-IF M20D24 N	–	B	–	–	–	–	B	B	B	B	–	E	E	E	–	–	–	N	–
Standard with 120V AC/DC LEDs	1492-IF M20D12 0	A	–	–	–	B	–	–	–	–	–	(1)	–	–	–	–	–	–	D	–
Narrow standard with 120V AC LEDs	1492-IF M20D12 0N	A	–	–	–	–	–	–	–	–	–	G	–	–	–	–	–	–	N	–
24V AC/DC LEDs and extra terminals for outputs	1492-IF M20D24 -2	–	–	–	–	–	–	–	–	–	–	–	E	E	E	–	E	E	D	–
24V AC/DC LEDs and extra terminals for inputs	1492-IF M20D24 A-2	–	B	–	–	–	–	B	B	B	B	–	–	–	–	–	–	–	–	–
120V AC LEDs and extra terminals for outputs	1492-IF M20D12 0-2	–	–	–	–	–	–	–	–	–	–	C	–	–	–	–	–	–	D	–
120V AC LEDs and extra terminals for inputs	1492-IF M20D12 0A-2	A	–	–	–	–	–	–	–	–	–	–	–	–	–	–	–	–	–	–
3-wire sensor with 24V AC/DC LEDs	1492-IF M20D24 -3	–	B	–	–	–	–	B	B	B	B	–	–	–	–	–	–	–	–	–
8 Individually isolated with 24/48V AC/DC LEDs and 4 terminals/output	1492-IF M20DS2 4-4	–	–	–	–	–	–	–	–	–	–	–	–	–	–	–	–	–	–	S

LED Indicating 20-Terminal IFMs

Description	Cat. No.	I/O Module Catalog Number 1746-																		
		IA 16	IB 16	IC 16	IG 16	IH 16	IM 16	IN 16	ITB 16	ITV 16	IV 16	OA 16	OB 16	OB 16E	OBP 16	OG 16	OV 16	OVP 16	OW 16	OX8
8 Individually isolated with 120V AC LEDs and 4 terminals/output	1492-IF M20DS1 20-4	–	–	–	–	–	–	–	–	–	–	–	–	–	–	–	–	–	–	S
240V AC LEDs and extra terminals for outputs	1492-IF M20D24 0-2	–	–	–	–	–	–	–	–	–	–	C	–	–	–	–	–	–	D	–
240V AC LEDs and extra terminals for inputs	1492-IF M20D24 0A-2	–	–	–	–	–	A	–	–	–	–	–	–	–	–	–	–	–	–	–
120V AC/DC with extra terminals for outputs	1492-IF M20F-F-2	–	–	–	–	–	–	–	–	–	–	C	E	E	E	–	E	E	D	–
Extra terminals with 24V AC/DC blown fuse LED indicators	1492-IF M20F-F2 4-2	–	–	–	–	–	–	–	–	–	–	–	E	E	E	–	E	E	D	–
Extra terminals with 120V AC/DC blown fuse LED indicators	1492-IF M20F-F1 20-2	–	–	–	–	–	–	–	–	–	–	C	–	–	–	–	–	–	D	–
Extra terminals with 240V AC/DC blown fuse LED indicators	1492-IF M20F-F2 40-2	–	–	–	–	–	–	–	–	–	–	C	–	–	–	–	–	–	D	–
Extra terminals with 24V AC/DC blown fuse LED indicators for inputs	1492-IF M20F-F2 4A-2	–	B	–	–	–	–	B	B	–	–	–	–	–	–	–	E	E	–	–
Extra terminals with 120V AC/DC blown fuse LED indicators for inputs	1492-IF M20F-F1 20A-2	A	–	–	–	B	–	–	–	–	–	–	–	–	–	–	–	–	–	–
8 Individually isolated 120V AC/DC with extra terminals for outputs	1492-IF M20F-F S-2	–	–	–	–	–	–	–	–	–	–	–	–	–	–	–	–	–	–	S
8 Individually isolated with extra terminals and 24V AC/DC blown fuse LED indicators	1492-IF M20F-F S24-2	–	–	–	–	–	–	–	–	–	–	–	–	–	–	–	–	–	–	S
Two 4-point isolated groups with four terminals/input and 24V AC/DC blown fuse LED indicators	1492-IF M20F-F S24A-4	–	–	–	–	–	–	–	–	–	–	–	–	–	–	–	–	–	–	–
8 Individually isolated with extra terminals/output and 120V AC/DC blown fuse LED indicators	1492-IF M20F-F S120-2	–	–	–	–	–	–	–	–	–	–	–	–	–	–	–	–	–	–	S

LED Indicating 20-Terminal IFMs

Description	Cat. No.	I/O Module Catalog Number 1746-																		
		IA 16	IB 16	IC 16	IG 16	IH 16	IM 16	IN 16	ITB 16	ITV 16	IV 16	OA 16	OB 16	OB 16E	OBP 16	OG 16	OV 16	OVP 16	OW 16	OX8
8 Individually isolated with 4 terminals/output and 120V AC/DC blown fuse LED indicators	1492-IF M20F-F S120-4	–	–	–	–	–	–	–	–	–	–	–	–	–	–	–	–	–	–	S
Two 4-point isolated groups with four terminals/input and 120V AC/DC blown fuse indicators	1492-IF M20F-F S120A-4	–	–	–	–	–	–	–	–	–	–	–	–	–	–	–	–	–	–	–
8 Individually isolated with 4 terminals/output and 240V AC/DC blown fuse LED indicators	1492-IF M20F-F S240-4	–	–	–	–	–	–	–	–	–	–	–	–	–	–	–	–	–	–	S

(1) For applications with offside leakage current of >0.5 ma. Use 1492-IFM20D120N instead of 1492-IFM20D120A-2 or 1492-IFM20D120-2.

Fusible 20-Terminal IFMs

Description	Cat. No.	I/O Module Catalog Number 1746-																		
		IA 16	IB 16	IC 16	IG 16	IH 16	IM 16	IN 16	ITB 16	ITV 16	IV 16	OA 16	OB 16	OB 16E	OBP 16	OG 16	OV 16	OVP 16	OW 16	OX8
120V AC/DC with extra terminals for outputs	1492-IF M20F-F-2	–	–	–	–	–	–	–	–	–	–	C	E	E	E	–	E	E	D	–
Extra terminals with 24V AC/DC blown fuse LED indicators	1492-IF M20F-F2 4-2	–	–	–	–	–	–	–	–	–	–	–	E	E	E	–	E	E	D	–
Extra terminals with 120V AC/DC blown fuse LED indicators	1492-IF M20F-F1 20-2	–	–	–	–	–	–	–	–	–	–	C	–	–	–	–	–	–	D	–
Extra terminals with 240V AC/DC blown fuse LED indicators	1492-IF M20F-F2 40-2	–	–	–	–	–	–	–	–	–	–	C	–	–	–	–	–	–	D	–
Extra terminals with 24V AC/DC blown fuse LED indicators for inputs	1492-IF M20F-F2 4A-2	–	B	–	–	–	–	B	B	–	–	–	–	–	–	–	E	E	–	–
Extra terminals with 120V AC/DC blown fuse LED indicators for inputs	1492-IF M20F-F1 20A-2	A	–	–	–	B	–	–	–	–	–	–	–	–	–	–	–	–	–	–
8 Individually isolated 120V AC/DC with extra terminals for outputs	1492-IF M20F-F S-2	–	–	–	–	–	–	–	–	–	–	–	–	–	–	–	–	–	–	S
8 Individually isolated with extra terminals and 24V AC/DC blown fuse LED indicators	1492-IF M20F-F S24-2	–	–	–	–	–	–	–	–	–	–	–	–	–	–	–	–	–	–	S

Fusible 20-Terminal IFMs

Description	Cat. No.	I/O Module Catalog Number 1746-																		
		IA 16	IB 16	IC 16	IG 16	IH 16	IM 16	IN 16	ITB 16	ITV 16	IV 16	OA 16	OB 16	OB 16E	OBP 16	OG 16	OV 16	OVP 16	OW 16	OX8
Two 4-point isolated groups with four terminals/input and 24V AC/DC blown fuse LED indicators	1492-IF M20F-F S24A-4	–	–	–	–	–	–	–	–	–	–	–	–	–	–	–	–	–	–	–
8 Individually isolated with extra terminals/output and 120V AC/DC blown fuse LED indicators	1492-IF M20F-F S120-2	–	–	–	–	–	–	–	–	–	–	–	–	–	–	–	–	–	–	S
8 Individually isolated with 4 terminals/output and 120V AC/DC blown fuse LED indicators	1492-IF M20F-F S120-4	–	–	–	–	–	–	–	–	–	–	–	–	–	–	–	–	–	–	S
Two 4-point isolated groups with four terminals/input and 120V AC/DC blown fuse indicators	1492-IF M20F-F S120A-4	–	–	–	–	–	–	–	–	–	–	–	–	–	–	–	–	–	–	–
8 Individually isolated with 4 terminals/output and 240V AC/DC blown fuse LED indicators	1492-IF M20F-F S240-4	–	–	–	–	–	–	–	–	–	–	–	–	–	–	–	–	–	–	S

Relay Master and Expander 20-Terminal XIMs

Description	Cat. No.	I/O Module Catalog Number 1746-																		
		IA 16	IB 16	IC 16	IG 16	IH 16	IM 16	IN 16	ITB 16	ITV 16	IV 16	OA 16	OB 16	OB 16E	OBP 16	OG 16	OV 16	OVP 16	OW 16	OX8
Relay Master																				
20-pin master with eight (8) 24V DC relays	1492-XI M2024-8R	–	–	–	–	–	–	–	–	–	–	–	E	E	E	–	–	–	–	–
20-pin master with eight (8) 120V AC relays	1492-XI M20120-8R	–	–	–	–	–	–	–	–	–	–	CR	–	–	–	–	–	–	–	–
20-pin master with sixteen (16) 24V DC relays	1492-XI M2024-16R	–	–	–	–		–	–	–	–	–	–	E	E	E	–	–	–	–	–
20-pin master with sixteen (16) 24V DC relays with fusing	1492-XI M2024-16RF	–	–	–	–	–	–	–	–	–	–	–	E	E	E	–	–	–	–	–
20-pin master with sixteen (16) 120V AC relays	1492-XI M20120-16R	–	–	–	–	–	–	–	–	–	–	CR	–	–	–	–	–	–	–	–
20-pin master with sixteen (16) 120V AC relays with fusing	1492-XI M20120-16RF	–	–	–	–	–	–	–	–	–	–	CR	–	–	–	–	–	–	–	–
Relay Expander																				

Relay Master and Expander 20-Terminal XIMs

Description	Cat. No.	I/O Module Catalog Number 1746-																		
		IA 16	IB 16	IC 16	IG 16	IH 16	IM 16	IN 16	ITB 16	ITV 16	IV 16	OA 16	OB 16	OB 16E	OBP 16	OG 16	OV 16	OVP 16	OW 16	OX8
Expander with eight (8) 24V DC relays	1492-XIM24-8R	–	–	–	–	–	–	–	–	–	–	–	(1)	(1)	(1)	–	–	–	–	–
Expander with eight (8) 120V AC relays	1492-XIM120-8R	–	–	–	–	–	–	–	–	–	–	(1)	–	–	–	–	–	–	–	–
Fusible Expander																				
8-channel expander with 24V DC blown fuse indicators	1492-XIMF-F24-2	–	–	–	–	–	–	–	–	–	–	–	(1)	(1)	(1)	–	–	–	–	–
8-channel expander with 120V AC blown fuse indicators	1492-XIMF-F120-2	–	–	–	–	–	–	–	–	–	–	(1)	–	–	–	–	–	–	–	–
Feed-through Expander																				
Expander with eight (8) feed-through channels 132V AC/DC max	1492-XIMF-2	–	–	–	–	–	–	–	–	–	–	(1)	–	–	–	–	–	–	–	–

(1) One expander is connected to a master to provide a total of 16 outputs. An extender cable is included with each expander to attach it to the master.

40-Terminal IFMs and XIMs for 1746 Digital 32-Point I/O Modules

Feed-through 40-Terminal IFMs

Description	Catalog Number	I/O Module Catalog Number 1746-				
		IB32	IV32	OB32	OB32E	OV32
Standard 132V AC/DC max	1492-IFM40F	H	H	H	H	H
Extra terminals (2 per I/O) 132V AC/DC max	1492-IFM40F-2	H	H	H	H	H
3-wire sensor type input devices 60V AC/DC max	1492-IFM40F-3	H	H	–	–	–

LED Indicating 40-Terminal IFMs

Description	Catalog Number	I/O Module Catalog Number 1746-				
		IB32	IV32	OB32	OB32E	OV32
Standard with 24V AC/DC LEDs	1492-IFM40D24	H	H	H	H	H
24V AC/DC LEDs and extra terminals for outputs	1492-IFM40D24-2	–	–	H	H	H
24V AC/DC LEDs and extra terminals for inputs	1492-IFM40D24A-2	H	H	–	–	–
120V AC LEDs and extra terminals for outputs	1492-IFM40D120-2	–	–	–	–	–
120V AC LEDs and extra terminals for inputs	1492-IFM40D120A-2	–	–	–	–	–

LED Indicating 40-Terminal IFMs

Description	Catalog Number	I/O Module Catalog Number 1746-				
		IB32	IV32	OB32	OB32E	OV32
3-wire sensor with 24V AC/DC LEDs	1492-IFM40D24-3	H	H	–	–	–
16 Individually isolated with 24/48V AC/DC LEDs and four terminals/output	1492-IFM40DS24-4	–	–	–	–	–
16 Individually isolated with 24V AC/DC LEDs and four terminals/input	1492-IFM40DS24A-4	–	–	–	–	–
16 Individually isolated with 120V AC LEDs and four terminals/output	1492-IFM40DS120-4	–	–	–	–	–
16 Individually isolated with 120V AC LEDs and four terminals/input	1492-IFM40DS120A-4	–	–	–	–	–
16 Individually isolated with 240V AC LEDs and four terminals/input	1492-IFM40DS240A-4	–	–	–	–	–

Fusible 40-Terminal IFMs

Description	Catalog Number	I/O Module Catalog Number 1746-				
		IB32	IV32	OB32	OB32E	OV32
120V AC/DC with extra terminals for outputs	1492-IFM40F-F-2	–	–	H	H	H
Extra terminals with 24V AC/DC blown fuse indicators for outputs	1492-IFM40F-F24-2	–	–	H	H	H
Extra terminals with 120V AC/DC blown fuse indicators for outputs	1492-IFM40F-F120-2	–	–	–	–	–
16 Individually isolated with extra terminals for 120V AC/DC outputs	1492-IFM40F-FS-2	–	–	–	–	–
16 individually isolated with extra terminals and 24V AC/DC blown fuse indicators	1492-IFM40F-FS24-2	–	–	–	–	–
16 Individually isolated with 24V AC/DC blown fuse indicators and four terminals/output	1492-IFM40F-FS24-4	–	–	–	–	–
16 Individually isolated with extra terminals and 120V AC/DC blown fuse LED indicators	1492-IFM40F-FS120-2	–	–	–	–	–
16 Individually isolated with 120V AC/DC blown fuse indicators and four terminals/output	1492-IFM40F-FS120-4	–	–	–	–	–
16 Individually isolated with 240V AC/DC blown fuse indicators and four terminals/output	1492-IFM40F-FS240-4	–	–	–	–	–
16 Individually isolated with 24V AC/DC blown fuse indicators and four terminals/input	1492-IFM40F-FS24A-4	–	–	–	–	–
16 Individually isolated with 120V AC/DC blown fuse indicators and four terminals/input	1492-IFM40F-FS120A-4	–	–	–	–	–

Relay Master and Expander 40-Terminal XIMs

Description	Catalog Number	I/O Module Catalog Number 1746-				
		IB32	IV32	OB32	OB32E	OV32
Relay Master						
40-pin master with eight (8) 24V DC relays	1492-XIM4024-8R	–	–	H	H	–
40-pin master with sixteen (16) 24V DC relays	1492-XIM4024-16R	–	–	H	H	–
40-pin master with sixteen (16) 24V DC relays with fusing	1492-XIM4024-16RF	–	–	H	H	–
Relay Expander						
Expander with eight (8) 24V DC relays	1492-XIM24-8R	–	–	(1)	(1)	–
Expander with eight (8) 120V AC relays	1492-XIM120-8R	–	–	–	–	–
Expander with sixteen (16) 24V DC relays with fusing	1492-XIM24-16RF	–	–	(2)	(2)	–
Fusible Expander						
8-channel expander with 24V DC blown fuse indicators	1492-XIMF-F24-2	–	–	(1)	(1)	–
8-channel expander with 120V AC blown fuse indicators	1492-XIMF-F120-2	–	–	–	–	–
Feed-through Expander						
Expander with eight (8) feed-through channels 132V AC/DC max	1492-XIMF-2	–	–	(1)	(1)	–

(1) Two or three expanders can be connected to a master to provide a total of 32 outputs. An extender cable is included with each expander to connect it to the master.

(2) Can have one expandable module per master.

Pre-Wired Cables for 1746 Digital I/O Modules

These pre-wired cables have a pre-wired removable terminal block (RTB) on one end to connect to the front of a Bulletin 1746 digital I/O module and a connector on the other end to plug into a 20- or 40-terminal IFM/XIM. You must first select the IFM/XIM from one of the preceding selection tables.

Cable Catalog Number	Standard Cable Lengths	Build to Order Available	Number of Conductors	Mating I/O Module Catalog Number
1492-CABLE(1)A	0.5, 1.0, 2.5, 5.0 m	Yes	20	1746-IA16, -IM16
1492-CABLE(1)B	0.5, 1.0, 2.5, 5.0 m	Yes	20	1746-IB16, -IH16, -IN16, -ITB16, -ITV16
1492-CABLE(1)C	0.5, 1.0, 2.5, 5.0 m	Yes	20	1746-OA16
1492-CABLE(1)CR	0.5, 1.0, 2.5, 5.0 m	Yes	20	1746-OA16
1492-CABLE(1)D	0.5, 1.0, 2.5, 5.0 m	Yes	20	1746-OW16, -OX8
1492-CABLE(1)E	0.5, 1.0, 2.5, 5.0 m	Yes	20	1746-IG16, -OB16, -OB16E, -OBP16, -OG16, -OV16, -OVP16

Cable Catalog Number	Standard Cable Lengths	Build to Order Available	Number of Conductors	Mating I/O Module Catalog Number
1492-CABLE(1)G	0.5, 1.0, 2.5, 5.0 m	Yes	20	1746-OA16
1492-CABLE(1)H	0.5, 1.0, 2.5, 5.0 m	Yes	20	1746-IB32, -IV32, -OB32, -OB32E, -OV32
1492-CABLE(1)N	0.5, 1.0, 2.5, 5.0 m	Yes	20	1746-OW16, -OX8
1492-CABLE(1)S	0.5, 1.0, 2.5, 5.0 m	Yes	20	1746-OX8

(1) Cables are available in standard lengths of 0.5 m, 1.0 m, 2.5 m, and 5.0 m. To order, insert the code for the desired cable length into the cat. no. (005 = 0.5 m, 010 = 1.0 m, 025 = 2.5 m, and 050 = 5.0 m). Example: Cat. No. 1492-CABLE005N is for a 0.5 m cable that could be used to connect a catalog number 1492-IFM20D24N IFM to a Catalog Number 1746-OW16 I/O module. Build-to-order lengths are also available.

I/O Module-Ready Cables for 1746 Digital I/O Modules

The I/O module-ready cables have a pre-wired RTB on one end to plug onto the front of a Bulletin 1746 I/O module and 20 or 40 individually colored #18 AWG conductors on the other end. These cables provide the convenience of pre-wired connections at the I/O module end, while still allowing the flexibility to fieldwire to standard terminal blocks of your choice.

I/O Module-Ready Cables for 1746 Digital I/O Modules

Cable Catalog Number	Standard Cable Lengths	Build to Order Available	Number of Conductors	Mating I/O Module Catalog Number
1492-CABLE(1)N3	1.0, 2.5, 5.0 m	Yes	40	1746-IB32, -IV32, -OB32, -OV32, -OB32E
1492-CABLE(1)RTBB	1.0, 2.5, 5.0 m	Yes	20	1746-IB16, -IC16, -IG16, -IH16, -IN16, -ITB16, -ITV16, -IV16, -OB16, -OB16E, -OBP8, -OBP16, -OG16, -OV16, -OVP16
1492-CABLE(1)RTBO	1.0, 2.5, 5.0 m	Yes	20	1746-OW16, -OX8
1492-CABLE(1)RTBR	1.0, 2.5, 5.0 m	Yes	20	1746-IA16, -OA16, -OAP12, -IM16

(1) Cables are available in standard lengths of 0.5 m, 1.0 m, 2.5 m, and 5.0 m. To order, insert the code for the desired cable length into the cat. no. (005 = 0.5 m, 010 = 1.0 m, 025 = 2.5 m, and 050 = 5.0 m). Example: Cat. No. 1492-CABLE005N is for a 0.5 m cable that could be used to connect a catalog number 1492-IFM20D24N IFM to a Catalog Number 1746-OW16 I/O module. Build-to-order lengths are also available.

IMPORTANT The following I/O Modules do not have RTBs: 1746-IA4, 1746-IA8, 1746-IB8, 1746-IM4, 1746-IM8, 1746-IV8, 1746-OA8, 1746-OB8.

AIFMs for 1746 Analog I/O Modules

Description	Catalog Number	I/O Module Catalog Number 1746-											
		FIO4I	FIO4V	NI4	NI8	NIO4I	NIO4V	NO4I	NO4V	NR4	QS	NI16I	NI16V
Feed-through													
4-channel input, output or 2-in/2-out combination with 3 terminals/channel	1492-AIFM4-3	L	L	A	–	L	L	B	B	–	–	–	–
6-channel isolated with 3…4 terminals/channel	1492-AIFM6S-3	–	–	–	–	–	–	–	–	D	–	–	–
8-channel differential 16-channel single-ended with 3 terminals/channel	1492-AIFM8-3	–	–	–	C	–	–	–	–	–	–	A46	A46
Thermocouple													
6-channel with 3 terminals/channel	1492-AIFM6TC-3	–	–	–	_	–	–	–	–	–	–	–	–
Fusible													
2-channel output, 2-channel input with 24V blown fuse indicators, test points, 5 terminals/input, 3 terminals/output	1492-AIFM4C-F-5	L	L	–	–	L	L	–	–	–	–	–	–
4-channel with 24V blown fuse indicators, test points, 5 terminals/input	1492-AIFM4I-F-5	–	–	A	–	–	–	–	–	–	–	–	–
8-channel with 24V DC blown fuse indicators, 5 terminals/channel	1492-AIFM8-F-5	–	–	–	C	–	–	–	–	–	–	–	–
16-channel input with 24V DC blown fuse indicators, 3 terminals/channel	1492-AIFM16-F-3	–	–	–	–	–	–	–	–	–	–	A46	A46
16-channel input with 24V DC blown fuse inidcators, 5 terminals/channel	1492-AIFM16-F-5	–	–	–	–	–	–	–	–	–	–	–	–
4-input/4-output channel with 8 fuses and 24V blown fuse indicators	1492-AIFMQS	–	–	–	–	–	–	–	–	–	Q	–	–

Pre-Wired Cables for 1746 Analog I/O Modules

These pre-wired cables have a pre-wired RTB on one end to connect to the front of a Bulletin 1746 analog I/O module and a connector on the other end to plug into a 20 or

40-terminal IFM. To use this table, you must first have selected an IFM from the preceding table.

Pre-Wired Cables for 1746 Analog I/O Modules

Cable Cat. No.	Standard Cable Lengths (m)	Build-to-Order Available	AIFM Connector	Mating I/O Module Catalog Number
1492-ACABLE(1)A	0.5, 1.0, 2.5, 5.0 m	Yes	15-pin D-shell	1746-NI4
1492-ACABLE(1)B	0.5, 1.0, 2.5, 5.0 m	Yes	15-pin D-shell	1746-NO4I, -NO4V
1492-ACABLE(1)C	0.5, 1.0, 2.5, 5.0 m	Yes	25-pin D-shell	1746-NI8
1492-ACABLE(1)D	0.5, 1.0, 2.5, 5.0 m	Yes	25-pin D-shell	1746-NR4
1492-ACABLE(1)L	0.5, 1.0, 2.5, 5.0 m	Yes	15-pin D-shell	1746-NIO4I, -NIO4V, -FIO4I, -FIO4V
1492-ACABLE(1)Q	0.5, 1.0, 2.5, 5.0 m	Yes	25-pin D-shell	1746-QS
1492-ACABLE(1)A46	0.5, 1.0, 2.5, 5.0 m	Yes	25-pin D-shell	1746-NI16I, -NI16V

(1) .To order, insert the code for the desired cable length into the cat. no. (005 = 0.5 m, 010 = 1.0 m, 025 = 2.5 m, and 050 = 5.0 m). Example: Catalog Number 1492-ACABLE005A is for a 0.5 m cable that could be used to connect a Catalog Number 1492-AIFM4I-F-5 IFM to a Catalog Number 1746-NI4 I/O module.

Step 2 – Select:

- *networks*
- *communication modules*
- *appropriate communication cables*

Select Network Communications

Rockwell Automation offers many control and communications media products to help you integrate plant operations. The SLC 500 family features communications modules and devices which provide support for different networks, including EtherNet/IP, ControlNet, DeviceNet, DH+, DH-485, Universal Remote I/O and serial networks.

NetLinx Open Network Architecture

NetLinx Open Network Architecture is the Rockwell Automation strategy of using open networking technology for seamless, top-floor to shop-floor integration. The NetLinxbased networks – DeviceNet, ControlNet, and EtherNet/IP – all use the Common Industrial Protocol (CIP), so they speak a common language and share a universal set of communication services. NetLinx architecture, part of the Integrated Architecture, seamlessly integrates all the components in an automation system from a few devices on one network to multiple devices on multiple networks including access to the Internet – helping you to improve flexibility, reduce installation costs, and increase productivity.

- The EtherNet/IP network is an open industrial-networking standard that supports implicit and explicit messaging and uses commercial, off-the-shelf Ethernet equipment and physical media.
- The ControlNet network allows intelligent, high-speed control devices to share the information required for supervisory control, work-cell coordination, operator interface, remote device configuration, programming, and troubleshooting.
- The DeviceNet network offers low-cost, high-speed access to plant-floor data from a broad range of plant-floor devices and a significant reduction in wiring.

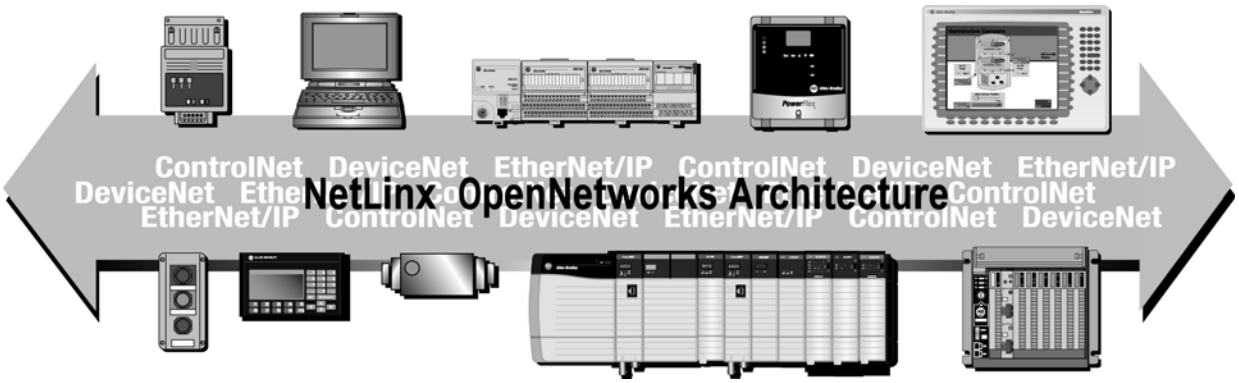

Selecting a Network

You can configure your system for information exchange between a range of devices and computing platforms, and operation systems. Use the table below to help you select a network.

Network Selection Criteria

If your application requires	Choose this network	Select this communication / device
• High-speed data transfer between information systems and/or a large quantity of controllers • Internet/Intranet connection • Program maintenance	EtherNet/IP	• SLC 5/05 Processor, or • 1761-NET-ENI EtherNet Interface • 1761-NET-ENIW Web-Enabled EtherNet Interface
• High-speed transfer of time-critical data between controllers and I/O devices • Deterministic and repeatable data delivery • Program maintenance • Media redundancy or intrinsic safety options	ControlNet	• 1747-KFC15 ControlNet Messaging Module • 1747-SCNR ControlNet Scanner Module • 1747-ACN15 and -ACNR15 ControlNet Adapter Modules
• Connections of low-level devices directly to plant floor controllers, without the need to interface through I/O devices • More diagnostics for improved data collection and fault detection • Less wiring and reduced startup time than traditional, hard-wired systems	DeviceNet	• 1747-SDN DeviceNet Scanner Module • 1761-NET-DNI DeviceNet Interface Module
• Plant-wide and cell-level data sharing with program maintenance	Data Highway Plus (DH+)	• SLC 5/04 Processor
	DH-485	• 1747-KE DH-485/RS-232C Interface • SLC 5/01, 5/02 or 5/03 Processor with a 1747-AIC Isolated Link Coupler • SLC 5/01, 5/02 or 5/03 Processor with a 1761-NET-AIC Advanced Interface Converter • 1747-UIC USB to DH-485 Interface Converter
• Connections between controllers and I/O adapters • Distributed controllers so that each has its own I/O communications with a supervisory controller	Universal Remote I/O	• 1747-SN Remote I/O Scanner • 1747-BSN Backup Remote I/O Scanner • 1747-ASB Remote I/O Adapter • 1747-DCM Direct Communication Module
• Modems • Messages that send and receive ASCII characters to/from devices such as ASCII terminals, bar code readers, message displays, weight scales, or printers	Serial	• SLC 5/03 Processor • SLC 5/04 Processor • SLC 5/05 Processor • SLC 5/01, 5/02, or 5/03 Processor with a 1747-KE DH-485/RS-232C Interface

Ethernet Network

The TCP/IP Ethernet network is a local-area network designed for the high-speed exchange of information between computers and related devices. With its high bandwidth (10 Mbps to 100 Mbps), an Ethernet network allows many computers, controllers, and other devices to communicate over vast distances. An Ethernet network

provides enterprise-wide systems access to plant-floor data. With an Ethernet network, you can maximize communication between a wide variety of equipment.

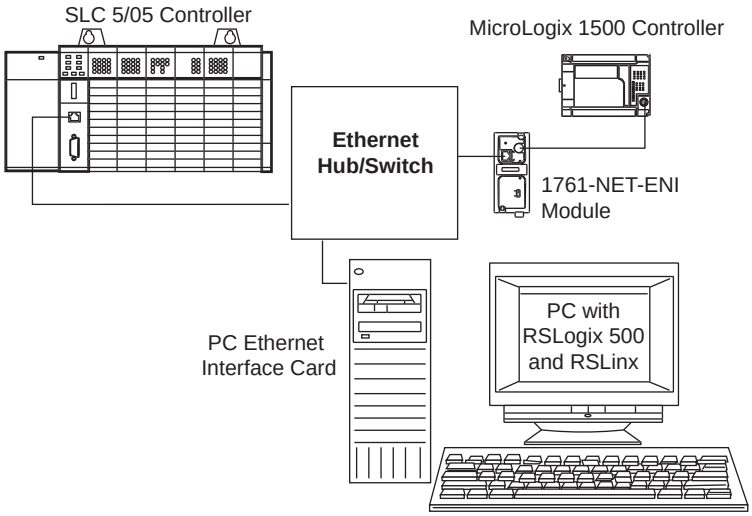

Ethernet connectivity for SLC 500 is provided for the following:

- SLC 5/05 processor
- 1761-NET-ENI/1761-NET-ENIW

MicroLogix 1000 controllers may be used with the 1761-NET-ENI, or -ENIW, however some features are not supported:

- Email (ENI/ENIW)
- Controller store/download of device configuration (ENI/ENIW)
- Floating point value display (ENIW)
- Floating point value write from the device to the controller (ENIW)
- Integer value write from the device to the controller (ENIW)
- String file display (ENIW)

Ethernet Interface (ENI) and Web-Enabled Ethernet Interface (ENIW)

The 1761-NET-ENI module provides EtherNet/IP Messaging connectivity for all DF1 full-duplex devices. The ENI allows users to easily connect SLC 5/03 and SLC 5/04 controllers onto new or existing Ethernet networks and upload/download programs, communicate between controllers, and generate E-mail messages via SMTP (simple mail transport protocol).

Compatible devices include: MicroLogix 1000/1200/1500, PLC-5, ControlLogix, CompactLogix, and FlexLogix controllers, and computers running RSLinx.

The 1761-NET-ENIW module adds web-server capabilities, enabling the display of 4 standard data web pages with user-configurable data descriptions, and 10 userconfigurable web page links on the ENIW home page.

EtherNet Device Specifications

	1761-NET-ENI	1761-NET-ENIW
Description	Ethernet Interface (ENI)	Web-Enabled Ethernet Interface (ENIW)
24V DC current draw	100 mA	
Power supply DC voltage range(1)	20.4…26.4V DC	
Isolation voltage	Tested @ 710V DC for 60 s	
Inrush current, max	200 mA @ 24V	
Communication rate	10/100 Mbps(2)	
Ethernet interface	10/100Base-T(2)	

(1) When the device is connected to a MicroLogix controller, power is provided by the MicroLogix controller's communication port.

(2) Series C devices.

ControlNet Network

The ControlNet network is an open, high-speed, deterministic network used for transmitting time-critical information. It provides real-time control and messaging services for peer-to-peer communication. As a high-speed link between controllers and I/O devices, a ControlNet network combines the capabilities of existing Universal Remote I/O and DH+ networks. You can connect a variety of devices to a ControlNet network, including personal computers, controllers, operator interface devices, drives, I/O modules. A ControlNet network combines the functionality of an I/O network and a peer-to-peer messaging network. This open network provides the performance required for critical control data, such as I/O updates and controller-tocontroller interlocking. ControlNet networks also support the transfer of non-critical data, such as program uploads, downloads, and messaging.

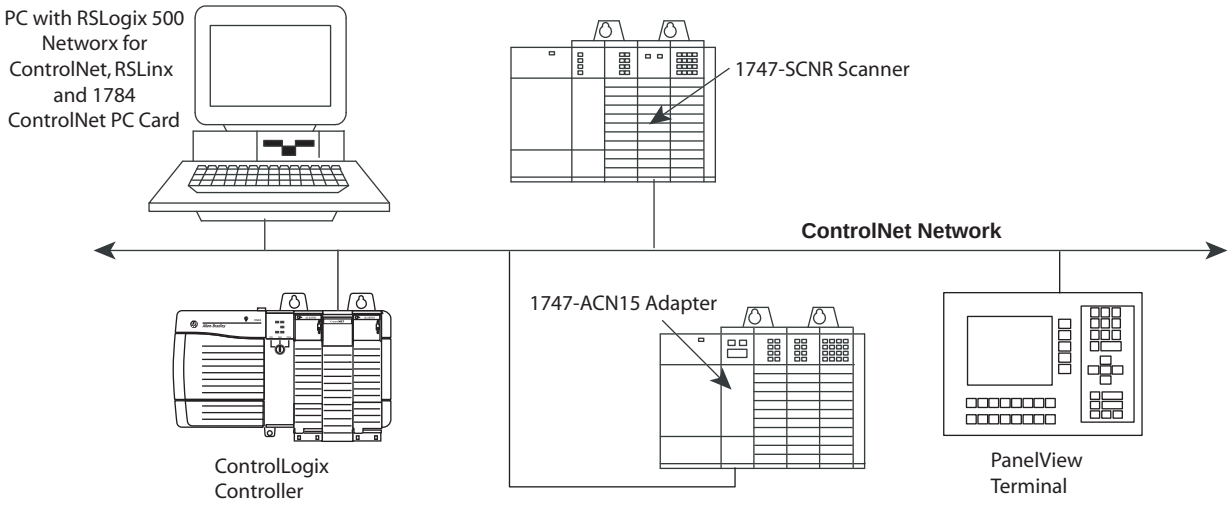

ControlNet network connectivity for SLC 500 is provided by the following:

- 1747-KFC15 ControlNet Messaging Module
- 1747-SCNR ControlNet Scanner
- 1747-ACN15 and 1747-ACNR15 ControlNet Adapters

ControlNet Messaging Module

The 1747-KFC15 module provides the capability for an SLC 5/03, 5/04, and 5/05 processor to send or receive unscheduled ControlNet messages. With unscheduled messaging, the SLC controller program can send peer-to-peer messages or be accessed and edited over the ControlNet network using RSLogix 500 software. The 1747-KFC15 consumes 0.640 A @ 5V DC.

The ControlNet Messaging Module features:

- 4-digit, 7-segment display for node address and module status.
- RS-232 KFC to SLC cable (included).
- media redundancy via dual BNC connectors.
- power from the SLC chassis backplane.
- ability to upgrade firmware via ControlFlash.

ControlNet Scanner Module

The 1747-SCNR module provides scheduled ControlNet network connections for SLC 5/02, 5/03, 5/04, and 5/05 processors. With scheduled messaging, the SLC processor can control I/O events in real time on the ControlNet network. The 1747-SCNR module can communicate with the 1771-PLC5C, 1756-Lx controllers, and with another 1747-SCNR module via scheduled messages on the ControlNet network. The 1747-SCNR module consumes 0.900 A @ 5V DC.

The ControlNet Scanner Module features:

- media redundancy via dual BNC connectors.
- ability to upgrade firmware via ControlFlash.

The 1747-SCNR module can control 1788-CN2DN and 1788-CN2FF linking devices as well as a variety of I/O platforms. The table below indicates with a "✓" which I/O platforms the 1747-SCNR module can control.

ControlNet Scanner I/O Control Capabilities

I/O Platform	Discrete	Analog
1746	✓	✓
1756		
1771	✓	✓

ControlNet Scanner I/O Control Capabilities

I/O Platform	Discrete	Analog
1793	✓	✓
1794	✓	✓
1797	✓	✓

ControlNet Adapter Modules

The 1747-ACN15 and -ACNR15 modules enable up to three 1746 chassis of I/O modules to produce/consume scheduled I/O on the ControlNet network. Both modules are compatible with all 1746 discrete, analog, and specialty I/O, except those requiring G-file configuration, such as the 1747-SN and 1747-BSN modules. The 1747-ACN15 and ACNR15 modules consume 0.9A at 5V dc.

The ControlNet Adapter Modules feature:

- optional media redundancy via dual BNC connectors (1747-ACNR15).
- individual connection to single modules or chassis connections to groups of discrete modules.
- ability to upgrade firmware via ControlFlash.

The table below indicates with a "✓" which ControlNet controllers can communicate to the 1747-ACN via scheduled messaging.

ControlNet Adapter Communication Capabilities

Scheduled Messaging	1747-SCNR	1771-PLC5C	1756-Lx via 1756-CNB	1784-KTCS
1747-ACN(R)15 Discrete I/O	✓	✓		✓
1747-ACN(R)15 Analog I/O	✓	✓		

DeviceNet Network

The DeviceNet network is an open, low-level communication link that provides connections between simple industrial devices like sensors and actuators to high-level devices like controllers. Based on standard Controller Area Network (CAN) technology, this open network offers inter-operability between like devices from multiple vendors. A DeviceNet network reduces installation costs, startup/commissioning time, and system or machine downtime.

The DeviceNet network provides:

- inter-operability – simple devices from multiple vendors that meet DeviceNet standards are interchangeable.
- Common network - an open network provides common end-user solutions and reduces the need to support a wide variety of device networks.
- Lower maintenance costs – replace devices without disrupting other devices.

- Cost-effective wiring – one wire supplies communications and 24V DC power.

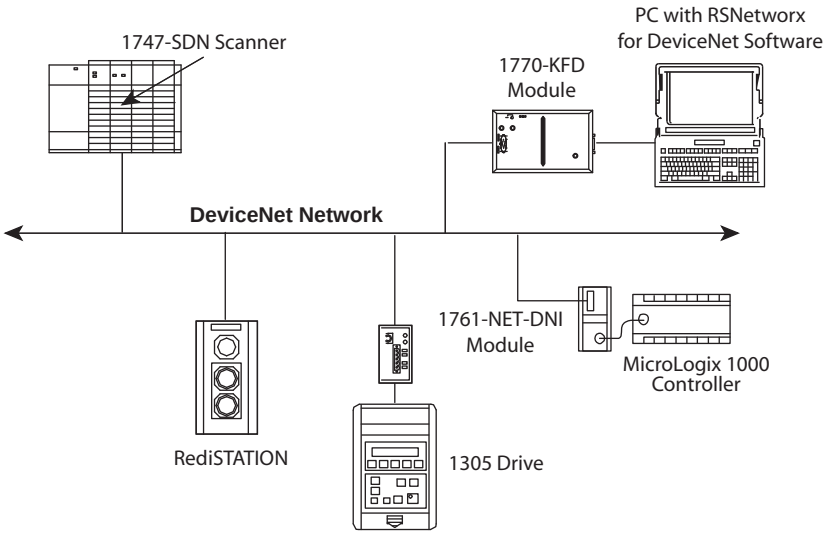

DeviceNet connectivity for SLC 500 is provided by the following:

- 1747-SDN DeviceNet Scanner Module
- 1761-NET-DNI DeviceNet Interface

DeviceNet Scanner Module

The 1747-SDN scanner module enables communication between an SLC 5/02 or higher processor and a maximum of 63 DeviceNet-compatible I/O devices. The scanner is the DeviceNet master, enabling data transfer between DeviceNet slave devices using the strobe and poll message mode. The SLC system supports multiple scanners in a single-processor chassis.

The 1747-SDN module supports:

- up to 150 words of input and 150 words of output data.
- all standard DeviceNet communication rates.
- the exchange of status and configuration data.

DeviceNet Scanner Specifications

Attributes	1747-SDN
Backplane current (mA) @ 5V	500 mA
Network power source requirement	125 Kbps 250 Kbps 500 Kbps
Isolation voltage	Tested @ 500V DC for 60 s

Data Highway Plus (DH+) Network

The DH+ network is a local area network designed to support remote programming and data acquisition for factory-floor applications. You can also use DH+ communication modules to implement a peer-to-peer network.

The DH+ network supports daisy-chain and trunkline-dropline configurations. The number of supported devices on a DH+ link and the maximum length of the cable depends on the communication rate.

The table below shows the maximum cable lengths, communication rates and associated termination resistor sizes for the DH+ network.

DH+ Network Specifications

Baud Rate	Maximum Cable Distance	Terminating Resistor Size
57.6 K baud	3048 m (10,000 ft)	150 Ω
115 K baud	1542 m (5000 ft)	150 Ω
230.4 K baud	762 m (2500 ft)	82 Ω

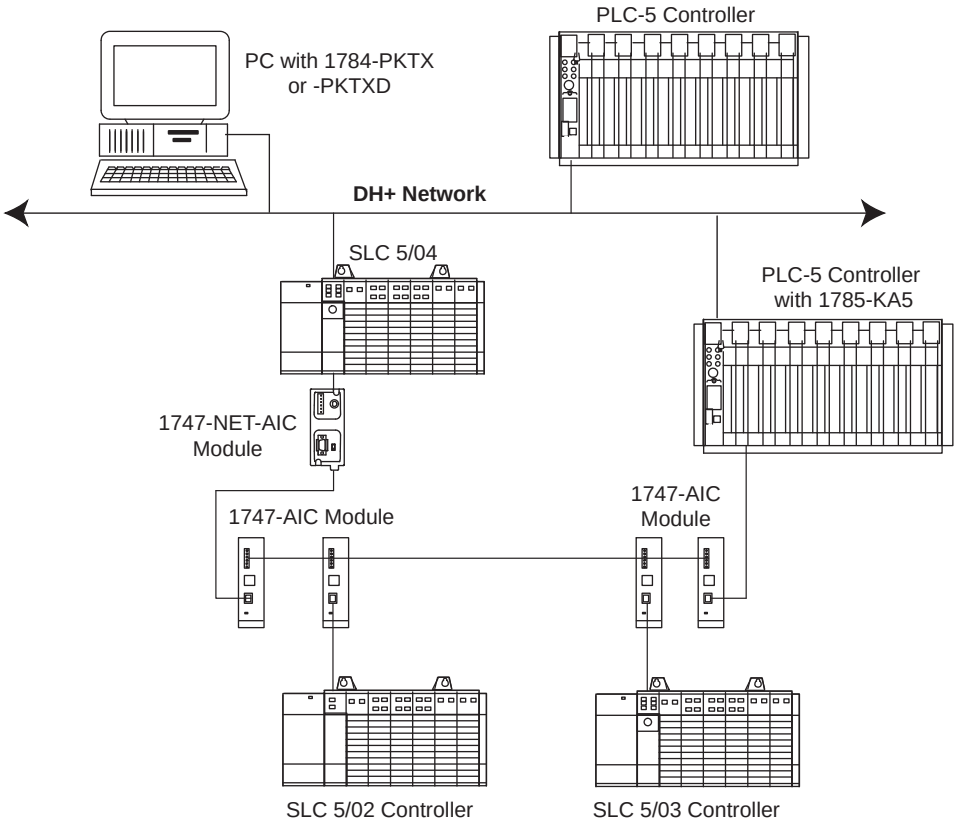

Data Highway Plus connectivity for the SLC 500 is provided by the SLC 5/04 processor. See page 63 for more information on the SLC 5/04.

DH-485 Network

The DH-485 communication network allows devices on the plant floor to share information. Via the network, application programs can:

- monitor process and device parameters and status, including fault and alarm detection.
- perform data acquisition.
- perform supervisory control functions.
- upload/download PLC programs over the network.

The network offers connection to up to 32 nodes, token passing access control, and the ability to add or remove nodes without disrupting the network. DH-485 supports slave devices and features multiple-master capability.

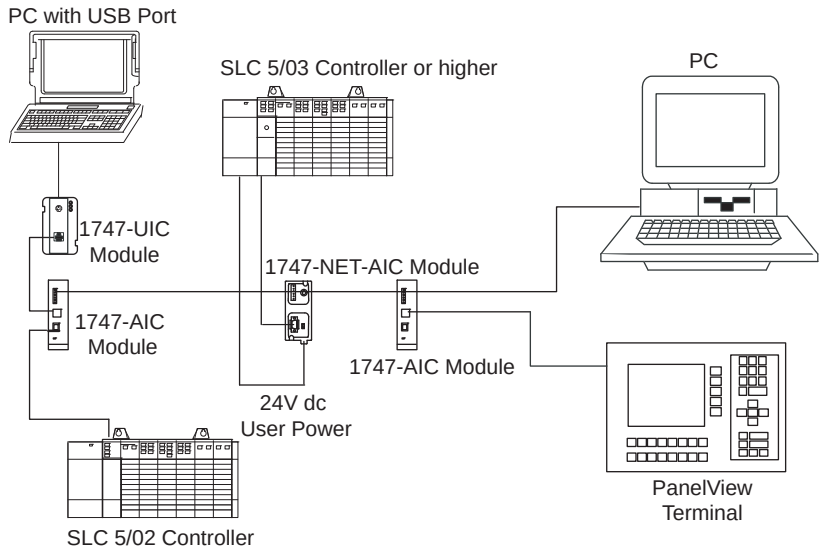

The SLC 500 family includes the following DH-485 devices:

- 1747-KE DH-485/RS-232C Interface Module
- 1761-NET-AIC Advanced Interface Converter
- 1747-AIC Isolated Link Coupler
- 1747-UIC USB to DH-485 Converter

DH-485/RS-232C Interface Module

The 1747-KE module is a communication interface that acts as a bridge between DH-485 networks and RS-232C devices using DF1 protocol. It allows you to access your SLC 500 processor through an RS-232C link. When used in an SLC 500 chassis with a modem, the 1747-KE module enables remote programming and troubleshooting of any single SLC 500 processor, remote communication to a DH-485 network of SLC 500 processors, and remote data collection from the data table of any SLC 500 processor. The interface module allows you to use the SLC 500 as a remote terminal unit.

DH-485/RS-232C Interface Module

Attribute	1747-KE
Backplane current (mA) @ 5V(1)	150 mA
Backplane current (mA) @ 24V(1) (2)	40 mA
Real time clock/accuracy	±1 minute/month at 25 ° C (77 °F) +0, -6 minute/month at 60 ° C (140 °F)
Isolation voltage(1) (2)	Tested @ 500V DC

(1) The 1747-KE module requires both 5V Dc and 24V DC power from the SLC backplane. The power consumption of the module must be taken into consideration when planning your SLC 500 system.

(2) If the 1747-AIC Link Coupler is connected to the 1747-KE module with a 1747-C10 cable, then the link coupler draws its power (85 mA @ 24V DC) through the module. Be sure to add this value to the current requirements for the 1747-KE when estimating the total requirements for your system. If the 1747-AIC Link Coupler is connected to the 1747-KE module with a 1747-C13 cable, the power for the link coupler comes from either an SLC 500 processor or an external power supply. Therefore, current requirements remain as listed.

1761-NET-AIC Advanced Interface Converter (AIC+)

This device is an isolated RS-232 to RS-485 converter. It allows two RS-232 devices (SLC 5/03, SLC 5/04, SLC 5/05; MicroLogix 1000, 1200, and 1500; DTAM Micro; PanelView) to connect to the DH-485 network.

To protect connected devices, the coupler provides 1500V dc isolation between the communications cable and the attached SLC 500 controller and peripheral devices.

Advanced Interface Converter (AIC+) Specifications

Attribute	1761-NET-AIC
24V DC current draw	120 mA
Inrush current, max.	200 mA @ 24V
24V DC power source requirement	20.4…28.8V DC
Isolation voltage	Tested @ 500V DC for 60 s

1747-AIC Isolated Link Coupler

The panel-mountable isolated link coupler is used to connect SLC 5/01, SLC 5/02, and SLC 5/03 processors to a DH-485 network. Where there are two or more SLC 500 processors on the link, one isolated link coupler is required for each processor.

When another device (DTAM or personal computer) is connected to an SLC 500 processor at a distance greater than 6.09 m (20 ft), an isolated link coupler must be connected at each end of the link. A 1747-C11 cable is included with the coupler for connection to the processor.

1747-UIC Universal Serial Bus to DH-485 Interface Converter

This device allows a computer with a USB port to interface to DH-485 ports on an SLC 500, MicroLogix, or other Rockwell Automation controllers and on PanelView terminals. The 1747-UIC features a USB connector as well as both an RS-232 and an RS-485 port. Use the RS-232 port to connect to SLC 5/03, 5/04, 5/05 (Channel 0), MicroLogix, CompactLogix, FlexLogix, ControlLogix, PanelView 300 or higher, or AIC+. Use the RS-485 Port to connect to SLC 5/01, 5/02, 5/03 (Channel 1), PanelView 300 or higher, or 1747-AIC.

USB to DH-485 Interface Converter Specifications

Attribute	1747-UIC
USB power consumption	<100 mA (low power)
USB speed	USB 1.1 (12 Mbps)
DH-485 Baud Rate	19.2 Kbps

Universal Remote I/O (RIO) Network

The strength and versatility of the Universal Remote I/O network comes from the breadth of products it supports. In addition to 1746 I/O, the Universal Remote I/O network supports many Allen-Bradley and third-party devices.

Typical applications range from simple I/O links with controllers and I/O, to links with a wide variety of other types of devices. You connect devices through remote I/O adapter modules or built-in remote I/O adapters. Using the Universal RIO Network instead of direct-wiring a device over a long distance to a local I/O chassis reduces installation, start-up, and maintenance costs by placing the I/O closer to the sensors and actuators.

SLC 5/03, 5/04, and 5/05 processors support pass-thru which lets you configure RIO devices remotely from an Ethernet, DH+, or DH-485/DF1 network, as well as block transfer instructions for faster reading and writing of I/O data.

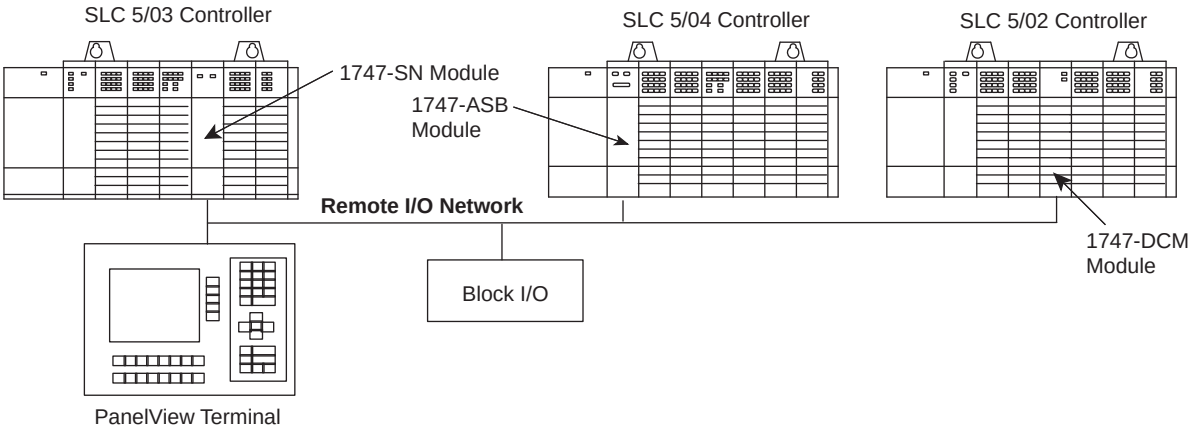

Universal Remote I/O Connectivity for SLC 500 is provided by the following interfaces:

- 1747-SN Remote I/O Scanner
- 1747-BSN Backup Remote I/O Scanner
- 1747-ASB Remote I/O Adapter
- 1747-DCM Direct Communication Module

RS-232/DF1 Port Splitters

Remote I/O Scanner Module

The 1747-SN module provides high-speed remote communication between an SLC processor and Allen-Bradley operator interface and control devices. The scanner provides connectivity of your SLC 5/02 or higher processor to devices such as InView Message displays, Power Monitor 3000, PanelView, 1791 Block I/O, Allen-Bradley Drives, 1746 I/O, 1771 I/O, and Flex I/O devices.

Note: The series B scanner supports block transfer of up to 64 words of data.

The 1747-SN features:

- noise immunity over various cable distances via selectable baud rates.
- distribution of devices over a wide physical area, supporting RIO cable lengths up to 3050 m (10,000 ft).
- connection of up to 16 devices in normal mode or 32 devices in complementary mode.
- capability to send large amounts of data to RIO devices without affecting system throughput, utilizing block transfers.
- capability to download and change applications in PanelView terminals and Power monitors via remote I/O passthru.

Backup Scanner Module

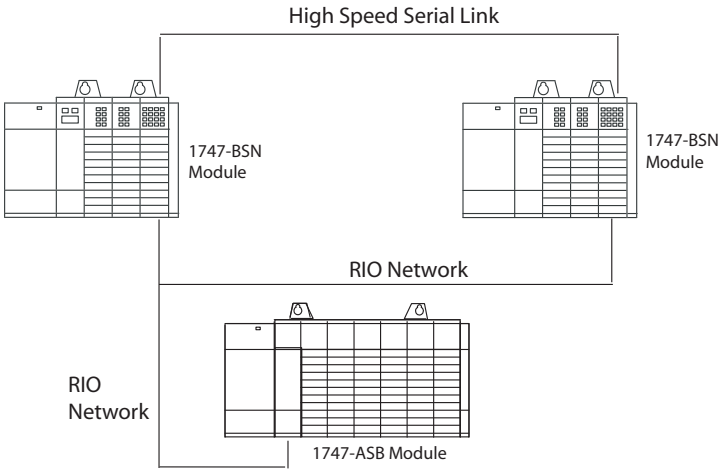

The 1747-BSN module contains the full complement of RIO scanner features, plus backup capability for support of redundant processor applications. The backup system consists of one or more pairs of complementary modules, with one module residing in the primary system and the other in the backup system. The primary system controls the operation of remote I/O, while the backup system monitors communications via the high-speed serial link (HSSL) and is available to take control in the event of a fault in the primary system.

The 1747-BSN features:

- backup of one Remote I/O or DH+ network per complementary BSN module pair.
- backup of one RS-232/DH-485 communications per complentary BSN module pair,
- allowing HMIs on channel 0 to automatically transfer to the primary processor.
- transfer of up to 2 K words of retentive data per BSN.
- repair of primary system fault during secondary backup system operation.
- remote programming capability of secondary processor on DH+ (SLC 5/04 only).
- minimal user program impact.
- backup system diagnostic information.

Remote I/O Adapter Module

The 1747-ASB module provides a communication link between SLC or PLC scanners and a wide variety of 1746 I/O modules over the Remote I/O link. The module maps the image of the I/O modules in its remote chassis directly to the SLC or PLC image table.

The 1747-ASB module features:

- support for both discrete and block transfer image mapping.
- efficient image utilization with support for 1/2-slot, 1-slot, and 2-slot addressing.

Direct Communication Module

The 1747-DCM module links the SLC 500 controller to the Allen-Bradley PLC for distributed processing. The DCM acts as a remote I/O adapter on a remote I/O link.

Information is transferred between a local PLC or SLC scanner and a remote 1747-DCM module during each remote I/O scan. The number of DCMs that a scanner can supervise depends on the number of chassis the scanner supports and the chassis size of the DCM. The SLC 500 module controllers support multiple DCMs.

Note: An important distinction between a DCM module and the 1747-ASB module is that a DCM is placed in the chassis with the processor and it does not scan any I/O in the chassis as an ASB module does.

Remote I/O Device Specifications

Remote I/O Device Catalog Numbers and Specifications

Catalog Number	Description	Backplane Current (mA) @ 5V
1747-SN	Remote I/O Scanner Module	600 mA
1747-BSN	Backup Scanner Module	800 mA
1747-ASB	Remote I/O Adapter	375 mA
1747-DCM	Direct Communication Module	360 mA

Remote I/O Device Catalog Numbers and Specifications

Baud Rate		Maximum Cable Distance	Terminating Resistor Size
Using Extended Node Capability	57.6 K baud	3048 m (10,000 ft)	82Ω 1/2 W
	115.2 K baud	1524 m (5000 ft)	82Ω 1/2 W
	230.4 K baud	762 m (2500 ft)	82Ω 1/2 W
Not Using Extended Node Capability	57.6 K baud	3048 m (10,000 ft)	150Ω 1/2 W
	115.2 K baud	1524 m (5000 ft)	150Ω 1/2 W
	230.4 K baud	762 m (2500 ft)	82Ω 1/2 W

Serial Network

The SLC 5/03, SLC 5/04, and SLC 5/05 processors have a serial port which is configurable for RS-232 compatible serial communication. Use the serial port to connect to devices that:

- communicate using DF1 protocol, such as modems, communication modules, programming workstations, or other Encompass partner devices.
- communicate using DH-485 protocol.
- send and receive ASCII characters, such as ASCII terminals, bar code readers, and printers.

When configured for system mode, the serial port supports DF1 protocol. Use system mode to communicate with other devices on the serial link. You can select the following DF1 modes:

- DF1 full-duplex: provides communication between an SLC 500 controller and other
- DF1 compatible devices. In point-to-point mode, the SLC 500 controller uses DF1 full-duplex protocol.
- DF1 half-duplex master: polls and transmits messages between the master and each remote node. In master mode, the SLC 500 controller uses DF1 half-duplex polled protocol.
- DF1 half-duplex slave: uses the controller as a slave station in a master/slave serial network. In slave mode, the SLC 500 controller uses DF1 half-duplex protocol.

DF1 radio modem: a hybrid between DF1 full-duplex and DF1 half-duplex, this protocol is optimized for use with radio modem networks.

In system mode, the serial port also supports supervisory control and data acquisition (SCADA) applications. SCADA systems allow you to monitor and control remote functions and processes using serial communication links between master and slave locations.

When configured for user mode, the serial port supports ASCII devices. Use the SLC 500 ASCII instructions to send information to and receive information from these devices.

RS-232/DF1 Port Splitters

The 1747 Port Splitters let a single RS-232/DF1 full-duplex communication port on a controller split into two separate ports for simultaneous connection with two external devices. The Port Splitter supports the following: SLC 500, PLC-5, MicroLogix, ControlLogix, CompactLogix, and FlexLogix controllers.

The Port Splitter has three ports for Controller, Network and Programmer/HMI connections. It also has a connection for a +24V external power source and status LEDs.

- The Controller port connects to the RS-232/DF1 full-duplex port of a controller. The port configuration is set at DF1 full-duplex, 8 bits, no parity, 1 stop bit and CRC checksum on powerup. The port automatically sets the baud rate to 19.2 K or 38.4 K baud taking advantage of the controller's maximum baud rate and can also match the controller's CRC or BCC checksum.
- The Network port on the 1747-DPS1 connects to a 1761-NET-AIC, 1761-NET-DNI or 1761-NET-ENI module and receives any messages initiated from the controller. The network port can source power from the port splitter's external power supply to one of the above modules if a 1761-CBL-AM00 or 1761-CBL-HM02 cable is used.
- The Network port on the 1747-DPS2 provides similar functionality, but can be configured for communications with DH-485, DF1 half-duplex (master or slave), DF1 full-duplex, and DF1 radio modem networks. The port is programmed for DH-485 communication at the factory.
- The 1747-DPS2 port splitter has fully-isolated communication ports. Therefore, no external isolation is required.
- The Prog/HMI port connects to a programming station or HMI device (PanelView Standard, PanelView Plus, VersaView CE) for respond only operations.

The serial configuration for the Network and Programmer/HMI ports on the 1747-DPS1 port splitter must be set to DF1 full-duplex, 8 bits, no parity, 1 stop bit, 19.2 K baud and CRC checksum.

The Network port on the 1747-DPS2 port splitter can be configured forwonderduplex, and DF1 radio modem networks.

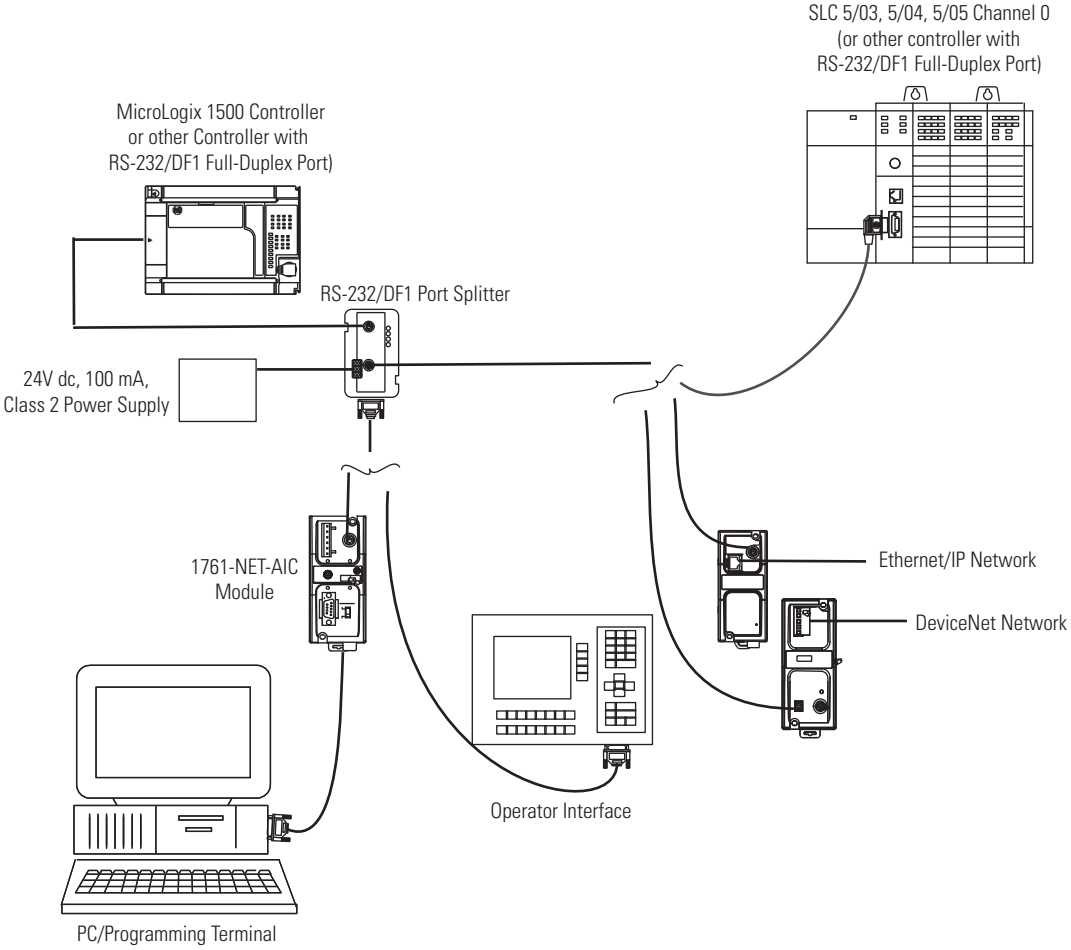

Communication Cables

The following tables provide a description of available communication cables and a summary of cable connectivity.

Communication Cables

Catalog Number	Description
1761-CBL-AC00	SLC 5/03, 5/04, and 5/05 Communication Cable - This 45 cm (17.7 in) cable has two 9-pin DTE connectors and is used to connect the SLC 5/03, 5/04, or 5/05 processor RS-232 channel (channel 0) to port 1 of the 1761-NET-AIC.
1761-CBL-AP00	SLC 5/03, 5/04, and 5/05 Communication Cable - This 45 cm (17.7 in) cable has a 9-pin DTE and an 8-pin mini DIN connector and is used to connect the SLC 5/03, 5/04, or 5/05 processor RS-232 channel (channel 0) to port 2 of the 1761-NET-AIC.
1761-CBL-PM02	SLC 5/03, 5/04, and 5/05 Communication Cable - This 2 m (6.5 ft) cable has a 9-pin DTE and an 8-pin mini DIN connector and is used to connect the SLC 5/03, 5/04, or SLC 5/05 processor RS-232 channel (channel 0) to port 2 of the 1761-NET-AIC.
1761-CBL-AS03	RJ45 to 6-Pin Phoenix Connector Communication Cable - This 3 m (9.8 ft) cable is used to connect the SLC 5/01, SLC 5/02, and SLC 5/03 processor RJ45 port to port 3 of the 1761-NET-AIC.

Communication Cables

Catalog Number	Description
1761-CBLAS09	RJ45 to 6-Pin Phoenix Connector Communication Cable - This 9.5 m (31.2 ft) cable is used to connect the SLC 5/01, SLC 5/02, and SLC 5/03 processor RJ45 port to port 3 of the 1761-NET-AIC.
1747-CP3	SLC 5/03, 5/04, and 5/05 RS-232 Programmer Cable - This 3 m (10 ft) cable has two 9-pin DTE connectors and is used to connect the SLC processor RS-232 channel (channel 0) to a personal computer serial port.
1747-C11	Processor to Isolated Link Coupler Replacement Cable – This 304.8 mm (12 in) cable is used to connect the SLC 500 processor to the Isolated Link Coupler (1747-AIC).
1747-C13	Specialty Module to Isolated Link Coupler Cable - Use a 1747-C13 cable to connect a BASIC or KE module to an Isolated Link Coupler (1747-AIC). Also connects 1747-UIC RS-485 port to AIC or SLC RJ45 port.

Cable Connectivity Summary

For Connectivity Between These Devices		Preferred Cable Catalog Number	These Cables May Be Used
1746-A4, -A7, -A10, or -A13 Chassis	1746-A4, -A7, -A10, or -A13 Chassis	1746-C7 1746-C9 1746-C16	–
1747-DTAM-E Data Table Access Module	SLC 500 Processors (DH-485 Channel)	1747-C10	1747-C11 1747-C20
1746-AIC Isolated Link Coupler	SLC 500 Processors (DH-485 Channel)	1747-C11	1747-C10 1747-C13 1747-C20
1747-UIC USB to DH-485 Interface Converter 1747-KE DH-485/RS-232C Interface Module 1746-BAS BASIC Module	1747-AIC Isolated Link Coupler (J2 Port) SLC 500 Processors (DH-485 Channel)	1747-C13	1747-C10 1747-C11
1746-xx32 32-channel I/O Modules	1492-IFM40x	1492-CABLExH	–
SLC 5/03 Processor (RS-232 Channel 0) SLC 5/04 Processor (RS-232 Channel 0) SLC 5/05 Processor (RS-232 Channel 0)	Personal Computer Serial Port (9-Pin DTE)	1747-CP3	–
1746-I/O	1492-IFMxx Interface Modules	1492-CABLExx	–
1747-SN Remote I/O Scanner 1747-DCM Direct Communication Module 1747-ASB SLC Remote I/O Adapter Module	Remote I/O Network	Belden 9463	–
SLC 5/04 Processors (1747-L541, -542, -543)	Data Highway Plus	Belden 9463	–
1747-AIC Isolated Link Coupler 1761-NET-AIC Communication Interface 1784-PKTX(D) Communication Interface Card	1747-AIC Isolated Link Coupler	Belden 9842 Belden 3106A	–
1747-DPS1 and 1747-DPS2 Port Splitter	Rockwell Automation controllers, PanelView, PanelView Plus, VersaView, InView and Personal Computers	Uses available 1747, 1756, 1761, 2706 and 2711 cables.	Refer to Installation Instructions for the port splitter (1747-IN516).

Notes:

Step 3 - Select:

- *processor-based on memory, I/O, speed, communications, and programming requirements*
- *memory modules*
- *adapter sockets*
- *battery assembly*

Select an SLC 500 Processor

With SLC 500 Modular Hardware Style controllers, you select the processor, power supply, and I/O modules to fit your application. Modular style chassis are available in 4, 7, 10, and 13-slot versions. See Selecting an SLC 500 Chassis on page 64 for details.

SLC 5/01

SLC 5/02

SLC 5/03

SLC 5/04

SLC 5/05

SLC 5/01

This processor offers a basic set of 51 instructions with the choice of 1K or 4K of memory in a modular hardware configuration. Modular I/O systems that include an SLC 5/01 processor can be configured with a maximum of three chassis (30 total slots) and from 4 I/O points to a maximum of 3940 I/O points.

SLC 5/02

This processor offers additional complex instructions, enhanced communications, faster scan times than the SLC 5/01, and extensive diagnostics that allow it to function in more complex applications. Modular I/O systems can be configured with a maximum of 3 chassis (30 total slots) and from 4 I/O points to a maximum of 4096 I/O points.

SLC 5/03

This processor provides 8 K, 16 K, or 32 K of memory. A built-in RS-232 channel gives you the flexibility to connect to external intelligent devices without the need for additional modules. Modular I/O systems can be configured with a maximum of 3 chassis (30 total slots) and from 4 I/O points to a maximum of 4096 I/O points.

SLC 5/04

The standard DH-485 port has been replaced with a DH+ port, providing high-speed SLC 5/04-to-SLC 5/04 communications and direct connection to PLC-5 controllers. Modular I/O systems can be configured with a maximum of 3 chassis (30 total slots) and from 4 I/O points to a maximum of 4096 I/O points. The available memory options are 16 K, 32 K, or 64 K. In addition, there is an SLC 5/04P option, which is designed

specifically for the Plastics Industry and contains ERC2 algorithms forPlastics Machinery Control.

SLC 5/05

The SLC 5/05 processor provides the same functionality as the SLC 5/04 processor with standard Ethernet communications rather than DH+ communications. Ethernet communication occurs at 10 Mbps or 100 Mbps, providing a high performance network for program upload/download, online editing, and peer-to-peer messaging. Modular I/O systems can be configured with a maximum of 3 chassis (30 total slots) and from 4 I/O points to a maximum of 4096 I/O points.

Controller Specifications

SLC 500 Modular Controllers Specifications

Specification	**SLC 5/01**		**SLC 5/02**	**SLC 5/03**			**SLC 5/04**			**SLC 5/05**[3]		
Catalog Number 1747-	**L511**	**L514**	**L524**	**L531**	**L532**	**L533**	**L541**	**L542**	**L543**	**L551**	**L552**	**L553**
Memory Size (Words)	1 K	4 K	4 K	8 K	16 K	32 K	16 K	32 K	64 K	16 K	32 K	64 K
Backplane Current (mA) @ 5V	90 mA			500 mA			1000 mA			1000 mA		
Backplane Current (mA) @ 24V	0 mA			175 mA			200 mA[2]			200 mA		
Digital I/O, max	7880		8192									
Local chassis/slots, max.	3/30											
On-board communications	DH-485 Slave		DH-485	DH-485 and RS-232			DH+ and RS-232			Ethernet and RS-232		
Optional memory module	EEPROM			Flash EEPROM								
Programming	RSLogix 500											
Programming Instructions	52		71	107								
Typical Scan Time[1]	8 ms/K		4.8 ms/K	1 ms/K			0.9 ms/K					
Program scan hold-up time after loss of power	20 ms…3 s (dependent on power supply loading)											
Bit Execution (XIC)	4 µs		2.4 µs	0.44 µs			0.37 µs					
Clock/calendar accuracy	N/A			±54 seconds/month @ 25 °C (77 °F) ±81 seconds/month @ 60 °C (140°F)								

(1) The scan times are typical for a 1K ladder logic program consisting of simple ladder logic and communication servicing. Actual scan times depend on your program size, instructions used, and the communication protocol.

(2) SLC 5/04 processors manufactured prior to April 2002 draw 200 mA @ 24V dc. Check the label to verify your processor's current draw.

(3) The 5/05 Series C processors can communicate to 100 Mbps and support increased connections: 1747-L551 = 32 connections; 1747-L552 = 48 connections; 1747-L553 = 64 connections.

SLC 500 Programming Instruction Set

The following table shows the SLC 500 instruction set listed within their functional groups.

SLC Programming Instruction Set

Functional Group	Description	Instruction(s)	SLC 5/01	SLC 5/02	SLC 5/03	SLC 5/04	SLC 5/05
Bit	monitor and control status of bits	XIC, XIO, OTE, OTL, OTU, OSR	✓	✓	✓	✓	✓
Timer and Counter	control operations based on time or number of events		✓	✓	✓	✓	✓
Compare	compare values using an expression or specific compare instruction	EQU, NEQ, LES, LEQ, GRT, GEQ, MEQ	✓	✓	✓	✓	✓
		LIM		✓	✓	✓	✓
Compute	evaluate arithmetic operations using an expression or specific arithmetic instruction	ADD, SUB, MUL, DIV, DDV, CLR, NEG	✓	✓	✓	✓	✓
		SQR, SCL		✓	✓	✓	✓
		SCP, ABS, CPT, SWP, ASN, ACS, ATN, COS, LN, LOG, SIN, TAN, XPY, RMP			✓	✓	✓
Logical	perform logical operations on bits	AND, OR, XOR, NOT	✓	✓	✓	✓	✓
Conversion	perform conversion between integer and BCD values, and radian and degree values	TOD, FRD, DCD	✓	✓	✓	✓	✓
		DEG, RAD, ENC			✓	✓	✓
Move	move and modify bits	MOV, MVM, RPC	✓	✓	✓	✓	✓
File	perform operations of file data	COP, FLL, BSL, BSR	✓	✓	✓	✓	✓
		FFL, FFU, LFL, LFU, FBC, DDT		✓	✓	✓	✓
Sequencer	monitor consistent and repeatable operations	SQO, SQC	✓	✓	✓	✓	✓
		SQL		✓	✓	✓	✓
Program Control	change the flow of ladder program execution	JMP, LBL, JSR, SBR, RET, MCR, TND, SUS, IIM, IOM, END	✓	✓	✓	✓	✓
		REF		✓	✓	✓	✓
User Interrupt	interrupt your program based on defined events	STD, STE, STS, IID, IIE, RPI, INT		✓	✓	✓	✓
Process Control	close-looped control	PID		✓	✓	✓	✓
Communications	read or write data to another station	MSG, SVC, BTR, BTW, CEM, DEM, EEM (SLC 5/05 only)		✓	✓	✓	✓
ASCII	read, write, compare, convert ASCII strings	ABL, ACB, ACI, ACL, ACN, AEX, AHL, AIC, ARD, ARL, ASC, ASR, AWA, AWT			✓	✓	✓

Controller Accessories

Memory Modules

These optional memory modules provide non-volatile memory in convenient modular form. The modules plug into a socket on the processor.

Memory Module Specifications

Catalog Number	Description
1747-M1	1 K, EEPROM Memory Module for SLC 5/01 Processors
1747-M2	4 K, EEPROM Memory Module for SLC 5/01 and SLC 5/02 Processors
1747-M13	64 K, Flash EPROM Memory Module for SLC 5/03, SLC 5/04, and SLC 5/05 Series C (or later) OS Firmware only

Adapter Sockets

Adapter sockets are required when using commercial PROM programmers to program and erase memory modules. The memory module fits into the adapter socket, and then the adapter socket fits into the zero insertion force (ZIF) socket on the PROM burner.

Adapter Socket Descriptions

Catalog Number	Description
1747-M5	SLC 5/01 and SLC 5/02 Adapter Socket - Five Sockets Per Package
1747-M15	SLC 5/03, SLC 5/04, and SLC 5/05 Adapter Socket for 1747-M13

Program Storage Device

The 1747-PSD simplifies PLC program development, backup and upgrade shipping issues for SLC 5/03 and higher processors, as well as MicroLogix controllers. The PSD allows you to:

- upload and download to your industrial programming station using RSLogix 500 software.
- back up PLC programs without using a computer or programming software.
- make multiple copies of an installed program.

Before downloading a program, the PSD performs error-checking to ensure that the program is compatible with the target PLC. It also provides automatic baud rate detection, CRC or BCC error detection, and connection via a standard RS-232, 9-pin,

D-shell connector. Stored programs are retained in Flash EPROM memory even if the batteries or the power supply fails.

Program Storage Device Specifications

Attribute	Description
Compatible Controllers	SLC 5/03 and higher, MicroLogix 1000, 1100, 1200, and 1500
Memory Size	64K words maximum
Memory Type	Flash EPROM
Operating Power	(2) AAA batteries, or power supply (7…30V dc, 250 mA max)
Compatible Cables	1747-CP3 and 1761-CBL-PM02 (not included)

Upgrade Kits

SLC 500 OS upgrade kits allow you to access the latest functional enhancements for your existing controller. .

SLC 500 Upgrade Kit Descriptions

Catalog Number	Description
1747-OS302	SLC 5/03 Upgrade Kit – includes 5 upgrade labels
1747-OS401	SLC 5/04 Upgrade Kit – includes 5 upgrade labels
1747-DU501	SLC 5/05 Flash Upgrade Kit – includes CD, instructions, and 5 upgrade labels
1747-RL302	SLC 5/03 Upgrade Kit Labels – includes 10 labels
1747-RL401	SLC 5/04 Upgrade Kit Labels – includes 10 labels
1747-RL501	SLC 5/05 Upgrade Kit Labels – includes 10 labels

1747-BA Lithium Battery Assembly

Backup power for RAM is provided by a replaceable lithium battery. The lithium battery provides backup for approximately five years for the 1747-L511 and two years for the 1747-L514. It provides backup for approximately two years for SLC 5/02, 5/03, 5/04, and SLC 5/05, as well. A battery LED on the processor alerts you when the battery voltage is low.

Notes:

Step 4 - Select:

- *chassis with sufficient slots*
- *(consider possible expansion)*
- *card slot fillers for open slots*
- *interconnect cables*

Select an SLC 500 Chassis

4-Slot Chassis

7-Slot Chassis

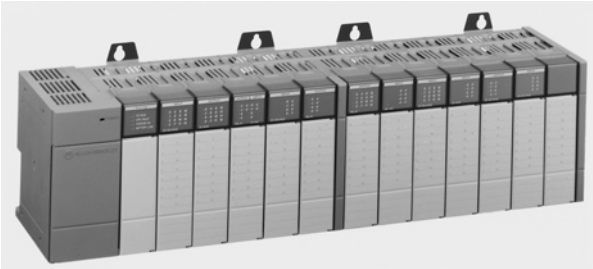

13-Slot Chassis

SLC modular chassis provide flexibility in system configuration. Four chassis sizes are available to suit your application needs. Choose from 4-slot, 7-slot, 10-slot, and 13- slot chassis based on your modular hardware component requirements. The SLC 1746 modular chassis houses the processor or I/O adapter module and the I/O modules.

Each chassis requires its own power supply, which mounts on the left side of the chassis. A maximum of 3 chassis can be connected with chassis interconnect cables (not included). If an interconnect cable is required, select a chassis interconnect cable from the following table.

Chassis and Cable Descriptions

Catalog Number	Description
1746-A4	4-Slot Chassis
1746-A7	7-Slot Chassis
1746-A10	10-Slot Chassis
1746-A13	Chassis Interconnect Cable – ribbon cable used when linking modular style chassis up to 152.4 mm (6 in.) apart in an enclosure.
1746-C9	Chassis Interconnect Cable – used when linking modular style chassis from 152.4 mm (6 in.) up to 914.4 mm (36 in.) apart in an enclosure.
1746-C16	Chassis Interconnect Cable – used when linking modular style chassis from 0.914 m (36 in.) up to 1.27 m (50 in.) apart in an enclosure.

1746-N2 Card Slot Filler

Use the 1746-N2 card slot filler to protect unused slots in the chassis from dust and debris.

Chassis Dimensions

The figures below provide mounting dimensions for each of the modular chassis and the available power supply options.

IMPORTANT In addition to dimensions, there are important spacing, heat, and grounding requirements which must be considered when mounting an SLC chassis.

Refer to the SLC 500 Modular Chassis Installation Instructions, publication number 1746-IN016 for more information.

4-Slot Modular Chassis

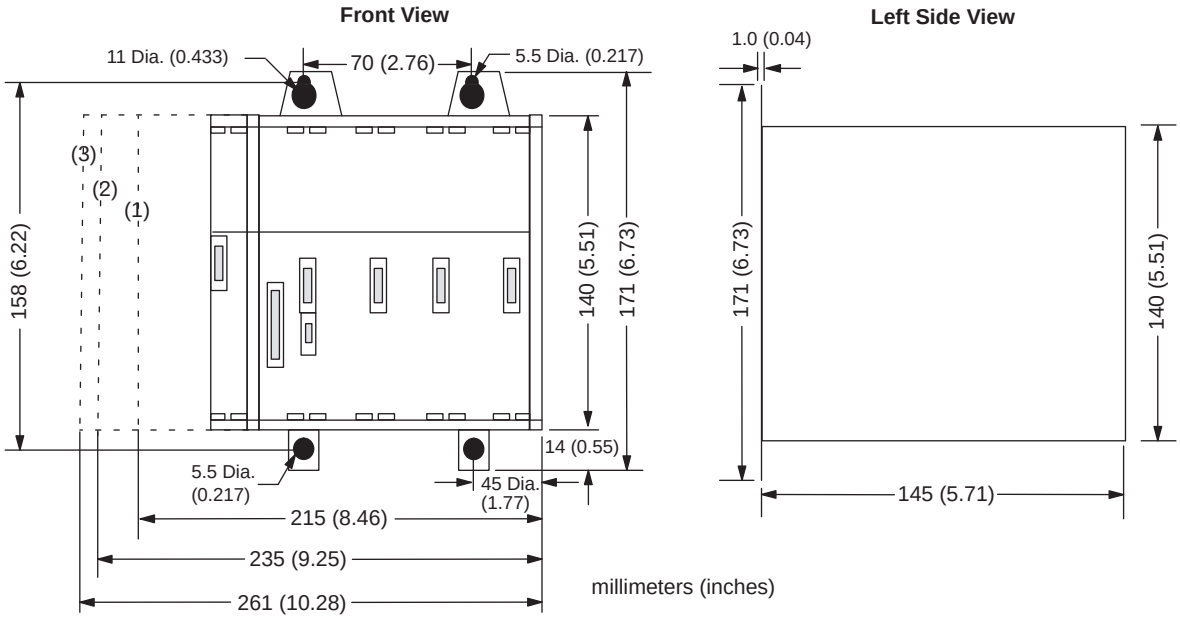

(1) Dimensions for 1746-P1 Power Supply
(2) Dimensions for 1746-P2, -P3, -P5, -P6 and -P7 Power Supplies.
(3) Dimensions for 1746-P4 Power Supply.

7-Slot Modular Chassis

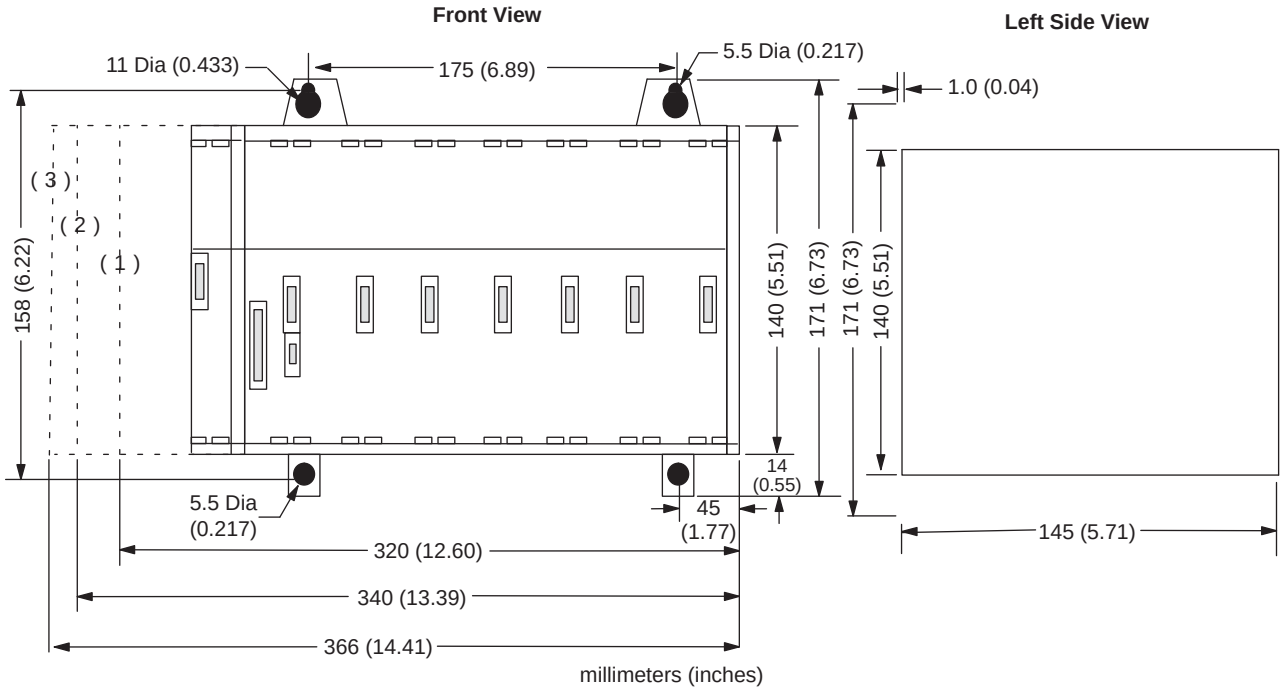

10-Slot Modular Chassis

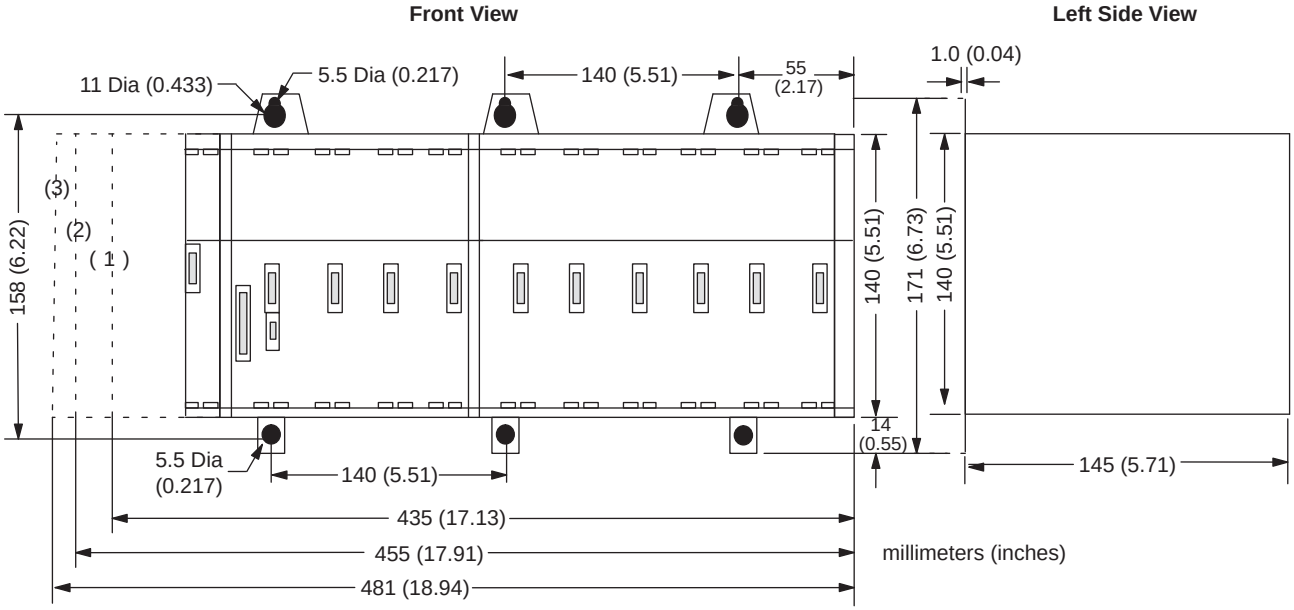

(1) Dimensions for 1746-P1 Power Supply
(2) Dimensions for 1746-P2, -P3, -P5, -P6, and P7 Power Supplies
(3) Dimensions for 1746-P4 Power Supply

13-Slot Modular Chassis

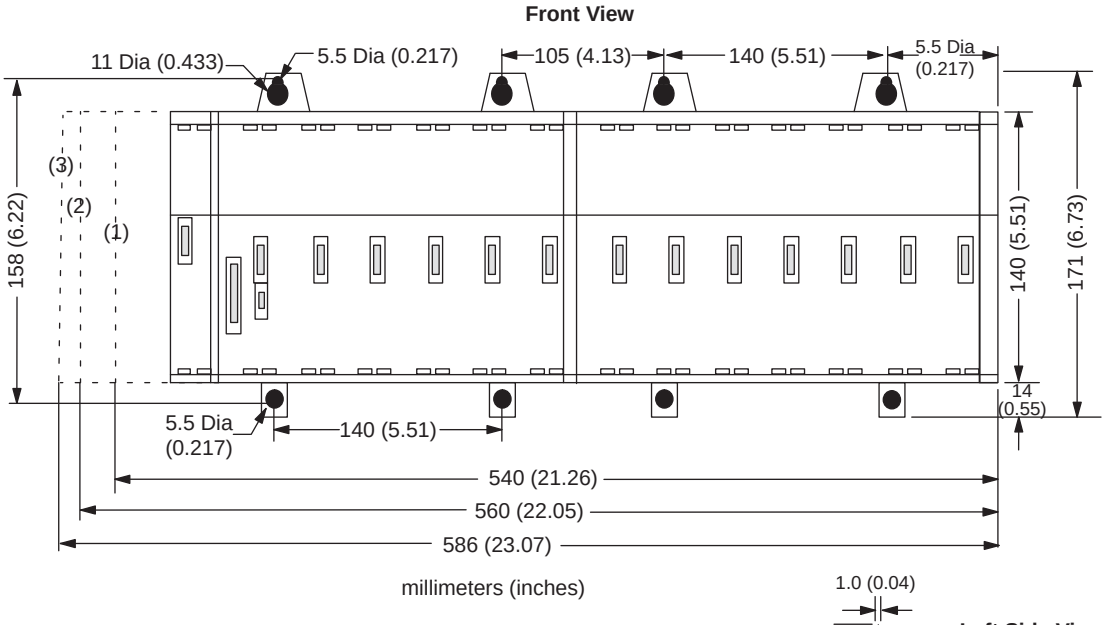

(1) Dimensions for 1746-P1 Power Supply
(2) Dimensions for 1746-P2, -P3, -P5, -P6, and P7 Power Supplies
(3) Dimensions for 1746-P4 Power Supply

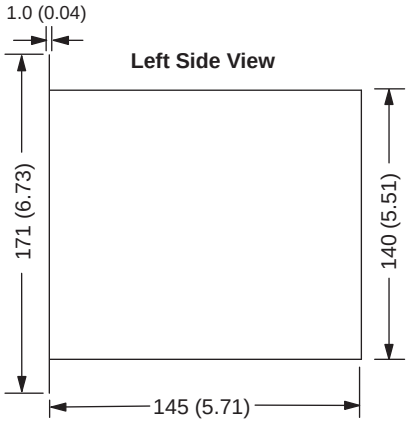

Step 5- Select:

- *one power supply for each chassis (Consider power supply loading of the entire system and capacity for system expansion.)*

Select SLC 500 Power Supplies

When configuring a modular system, you must have a power supply for each chassis. Careful system configuration will result in optimal system performance. Excessive loading of the power supply outputs can cause a power supply shutdown or premature failure.

See the power supply selection example in the next section and use the blank worksheet provided at the end of this guide to determine which power supply is appropriate for your system. You need one worksheet for each chassis.

TIP Consider future system expansion when choosing power supplies.

The SLC system features three AC power supplies and four DC power supplies. The power supply mounts on the left side of the chassis with two screws. For AC power supplies, 120/240 volt selection is made by placing the jumper to match the input voltage. SLC power supplies have an LED that illuminates when the power supply is functioning properly.

Power supplies are designed to withstand brief power losses. Power loss does not affect system operation for a period between 20 ms and 3 s, depending on the load.

Power Supply Catalog Numbers and Specifications

Catalog Number	Line Voltage	Current Capacity (Amps) @ 5V	Current Capacity (Amps) at 24V	User Current Capacity	Inrush Current, max.
1746-P1	85…132/170…265V AC, 47…63 Hz	2 A	0.46 A	0.2 A @ 24V DC	20 A
1746-P2	85…132/170…265V AC, 47…63 Hz	5 A	0.96 A	0.2 A @ 24V DC	20 A
1746-P3	19.2…28.8V DC	3.6 A	0.87 A	–	20 A
1746-P4	85…132/170…250V AC, 47…63 Hz	10 A	2.88 A(1)	1 A @ 24V DC(1)	45 A
1746-P5	90…146V DC	5 A	0.96 A	0.2 A @ 24V DC	20 A
1746-P6	30…60V DC	5 A	0.96 A	0.2 A @ 24V DC	20 A
1746-P7	10…30V DC, isolated	12V DC input: 2 A 24V DC input: 3.6 A	12V DC input: 0.46 A 24V DC input: 0.87 A	–	--

(1) Total of all output power (5V backplane, 24V backplane, and 24V user source) must not exceed 70 W.

General 1746-Px Power Supply Specifications

Specification	Description
Temperature, operating	0…60 °C (32…140 °F) (Current capacity derated by 5% above 55 °C for P1, P2, P3, P5, P6 and P7, no derating for P4)
Relative humidity	5…95% noncondensing
Wiring	#14 AWG (2 mm^2)

1746-P7 Current Capacity

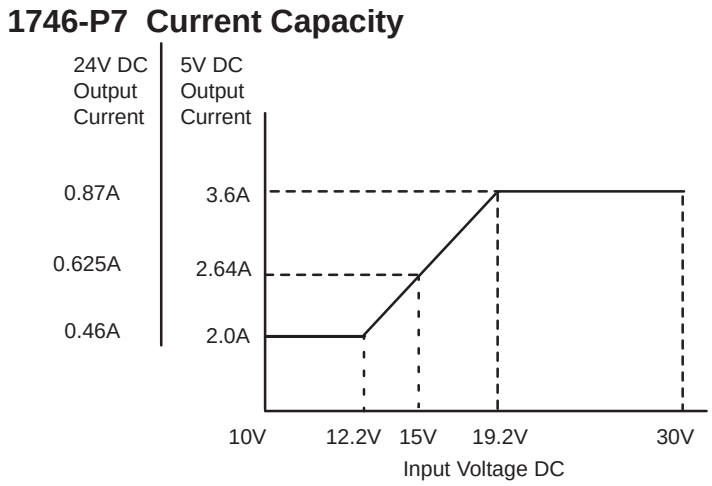

Power Supply Selection Example

Select a power supply for chassis 1 and chassis 2 in the control system below. For a detailed list of device load currents, see the next section.

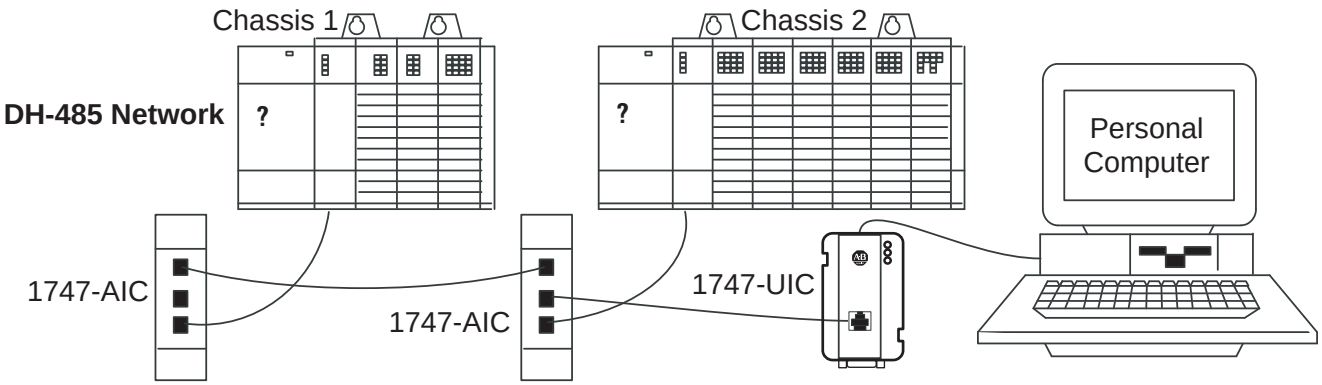

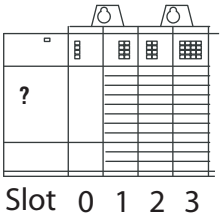

Slot Numbers	Description	Catalog Number	Backplane Current @ 24V DC
0	Processor Unit	1747-L514	0.105 A
1	Input Module	1747-IV8	0.000 A
2	Transistor Output Module	1746-OB8	0.000 A
3	Triac Output Modules	1746-OA16	0.000 A
Peripheral Device	Isolated Link Coupler	1747-AIC	0.085 A
Total Current			0.190 A

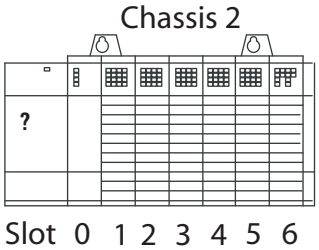

Power supply 1746-P1 is sufficient for Chassis #1. The internal current capacity for 1746-P1 is 2 A @ 5V DC and 0.46 A @ 24V DC.

Slot Numbers	Description	Catalog Number	Backplane Current @ 24V DC
0	Processor unit	1747-L514	0.105 A
1	Output module	1747-IV8	0.180 A
2	Combination module	1746-IO12	0.070 A
3, 4, 5, 6	Analog output modules	1746-NO4I	0.780 A (4 x 0.195)
Peripheral device	Isolated link coupler	1747-AIC	0.085 A
Peripheral device	USB to DH-485 Interface	1747-UIC	N/A
Total current			1.220 A

Power Supply 1746-P4 is sufficient for Chassis #2. The internal current capacity for this power supply is 10 A @ 5V DC and 2.88 A @ 24V DC; not to exceed 70 Watts.

If you have a multiple chassis system, make copies of the blank Power Supply Worksheet provided at the end of this guide. The next page provides an example worksheet for the system above.

Power Supply Worksheet Example

Procedure

1. For each slot of the chassis that contains a module, list the slot number, catalog number of module, and its 5 V and 24 V maximum currents. Also include the power consumption of any peripheral devices that may be connected to the processor other than a DTAM, HHT, or PIC - the power consumption of these devices is accounted for in the power consumption of the processor.

Chassis Number 1		Maximum Currents		Chassis Number 2		Maximum Currents	
Slot Number	**Cat. No.**	**5V dc**	**24V dc**	**Slot Number**	**Cat. No.**	**5V dc**	**24V dc**
0	1747-L511	0.350 A	0.105 A	0	1747-L514	0.350 A	0.105 A
1	1746-IV8	0.050 A	—	1	1746-OW16	0.170 A	0.180 A
2	1746-OB8	0.135 A	—	2	1746-NO41	0.055 A	0.195 A
3	1746-OA16	0.370 A	—	3	1746-NO41	0.055 A	0.195 A
				4	1746-NO41	0.055 A	0.195 A
				5	1746-NO41	0.055 A	0.195 A
				6	1746-IO12	0.090 A	0.070 A
Peripheral Device	1747-AIC		0.085 A	Peripheral Device	1747-AIC		0.085 A
Peripheral Device				Peripheral Device			
2. Add loading currents of all system devices at 5 and 24V dc to determine **Total Current**.		**0.905 A**	**0.190 A**	2. Add loading currents of all system devices at 5 and 24V dc to determine **Total Current**.		**0.830 A**	**1.220 A**

3. For 1746-P4 power supplies, calculate total power consumption of all system devices. If not using a 1746-P4, go to step 4.

Current		Multiply By	=Watts	Current		Multiply by	= Watts
Total Current at 5V dc	0.905 A	5V	4.525 W	Total Current at 5V dc	0.830 A	5V	4.15 W
Total Current at 24V dc	0.190 A	24V	4.56 W	Total Current at 24V dc	1.220 A	24V	29.28 W
User Current at 24V dc	0.500 A	24V	12.00 W	User Current at 24V dc	0.500 A	24V	12.00 W
Add the Watts values to determine Total Power (cannot exceed 70 W)			**21.085 W**	**Add the Watts values to determine Total Power (cannot exceed 70 W)**			**45.43 W**

4. Choose the power supply from the list of catalog numbers below. Compare the Total Current required for the chassis with the Internal Current capacity of the power supplies. Be sure the Total Current consumption for the chassis is less than the Internal Current Capacity for the power supply, for both 5 V and 24 V loads.

		Internal Current Capacity				Internal Current Capacity	
Catalog Number		**5V dc**	**24V dc**	**Catalog Number**		**5V dc**	**24V dc**
1746-P1		2.0 A	0.46 A	**1746-P1**		2.0 A	0.46 A
1746-P2		5.0 A	0.96 A	**1746-P2**		5.0 A	0.96 A
1746-P3		3.6 A	0.87 A	**1746-P3**		3.6 A	0.87 A
1746-P4 (See step 3)		10.0 A	2.88 A	**1746-P4 (see step 3)**		10.0 A	2.88 A
1746-P5		5.0 A	0.96 A	**1746-P5**		5.0 A	0.96 A
1746-P6		5.0 A	0.96 A	**1746-P6**		5.0 A	0.96 A
1747-P7✶	12V input	2.0 A	0.46 A	**1747-P7✶**	12V Input	2.0 A	0.46 A
	24V input	3.6 A	0.87 A		24V Input	3.6 A	0.87 A
Required Power Supply		**1746-P1**		**Required Power Supply**		**1746-P4**	

✶See P7 current capacity chart on page 69.

Power Supply Loading and Heat Dissipation

Use the values in the following tables to calculate the power supply loading for each chassis in your SLC modular application.

Processors

Catalog Number	Backplane Current (mA) @ 5V	Backplane Current (mA) @ 24V	Watts per point	Thermal dissipation, min.	Thermal dissipation, max.
1747-L511	90 mA	0 mA	N/A	1.75 W	1.75 W
1747-L514	90 mA	0 mA	N/A	1.75 W	1.75 W
1747-L524	350 mA	105 mA	N/A	1.75 W	1.75 W
1747-L531	500 mA	175 mA	N/A	1.75 W	1.75 W
1747-L532	500 mA	175 mA	N/A	2.90 W	2.90 W
1747-L533	500 mA	175 mA	N/A	2.90 W	2.90 W
1747-L541	1000 mA	200 mA	N/A	4.00 W	4.00 W
1747-L542	1000 mA	200 mA	N/A	4.00 W	4.00 W
1747-L543	1000 mA	200 mA	N/A	4.00 W	4.00 W
1747-L551	1000 mA	200 mA	N/A	4.00 W	4.00 W
1747-L552	1000 mA	200 mA	N/A	4.00 W	4.00 W
1747-L553	1000 mA	200 mA	N/A	4.00 W	4.00 W

Digital Input Modules

Catalog Number	Backplane Current (mA) @ 5V	Backplane Current (mA) @ 24V	Watts per point	Thermal dissipation, min.	Thermal dissipation, max.
1746-IA4	35 mA	0 mA	0.270 W	0.175 W	1.30 W
1746-IA8	50 mA	0 mA	0.270 W	0.250 W	2.40 W
1746-IA16	85 mA	0 mA	0.270 W	0.425 W	4.80 W
1746-IB8	50 mA	0 mA	0.200 W	0.250 W	1.90 W
1746-IB16	50 mA	0 mA	0.200 W	0.425 W	3.60 W
1746-IB32[(1)]	106 mA	0 mA	0.200 W	0.530 W	6.90 W
1746-IC16	50 mA	0 mA	0.220 W	0.425 W	3.95 W
1746-IG16	140 mA	0 mA	0.270 W	0.700 W	1.00 W
1746-IH16	85 mA	0 mA	0.320 W	0.675 W	3.08 W
1746-IM4	35 mA	0 mA	0.350 W	0.175 W	1.60 W
1746-IM8	50 mA	0 mA	0.350 W	0.250 W	3.10 W
1746-IM16	85 mA	0 mA	0.350 W	0.425 W	6.00 W
1746-IN16	85 mA	0 mA	0.350 W	0.425 W	6.00 W
1746-ITB16	50 mA	0 mA	0.200 W	0.425 W	3.625 W

Digital Input Modules

Catalog Number	Backplane Current (mA) @ 5V	Backplane Current (mA) @ 24V	Watts per point	Thermal dissipation, min.	Thermal dissipation, max.
1746-ITV16	85 mA	0 mA	0.200 W	0.425 W	3.625 W
1746-IV8	50 mA	0 mA	0.200 W	0.250 W	1.90 W
1746-IV16	85 mA	0 mA	0.200 W	0.425 W	3.60 W
1746-IV32	106 mA	0 mA	0.200 W	0.530 W	6.90 W

(1) Power supply loading for series D and later modules.

Digital Output Modules

Catalog Number	Backplane Current (mA) @ 5V	Backplane Current (mA) @ 24V	Watts per point	Thermal dissipation, min.	Thermal dissipation, max.
1746-OA8	185 mA	0 mA	1.00 W	0.925 W	9.00 W
1746-OA16	370 mA	0 mA	0.462 W	1.85 W	9.30 W
1746-OAP12	370 mA	0 mA	1.00 W	1.85 W	10.85 W
1746-OB8	135 mA	0 mA	0.775 W	0.675 W	6.90 W
1746-OB16	280 mA	0 mA	0.338 W	1.40 W	7.60 W
1746-OB32(1)	190 mA	0 mA	0.078 W	2.26 W	4.80 W
1746-OBP8	135 mA	0 mA	0.300 W	0.675 W	3.08 W
1746-OBP16	250 mA	0 mA	0.310 W	1.25 W	6.21 W
1746-OB16E	135 mA	0 mA	0.338 W	1.40 W	7.60 W
1746-OB32E	190 mA	0 mA	0.078 W	2.26 W	4.80 W
1746-OG16	180 mA	0 mA	0.033 W	0.90 W	1.50 W
1746-OV8	135 mA	0 mA	0.775 W	0.675 W	6.90 W
1746-OV16	270 mA	0 mA	0.338 W	1.40 W	7.60 W
1746-OV32(1)	190 mA	0 mA	0.078 W	2.26 W	4.80 W
1746-OVP16	250 mA	0 mA	0.310 W	1.25 W	6.21 W
1746-OW4	45 mA	45 mA	0.133 W	1.31 W	1.90 W
1746-OW8	85 mA	90 mA	0.138 W	2.59 W	3.70 W
1746-OW16	170 mA	180 mA	0.033 W	5.17 W	5.70 W
1746-OX8	85 mA	90 mA	0.825 W	2.59 W	8.60 W

(1) Power supply loading for series D and later modules.

Digital Combination Modules

Catalog Number	Backplane Current (mA) @ 5V	Backplane Current (mA) @ 24V	Watts per point	Thermal dissipation, min.	Thermal dissipation, max.
1746-IO4	30 mA	25 mA	0.270 W per input point 0.133 W per output point	0.75 W	1.60 W
1746-IO8	60 mA	45 mA	0.270 W per input point 0.133 W per output point	1.38 W	3.00 W
1746-IO12	90 mA	70 mA	0.270 W per input point 0.133 W per output point	2.13 W	4.60 W
1746-IO12DC	80 mA	60 mA	0.200 W per input point 0.133 W per output point	1.84 W	3.90 W

Analog Input Modules

Catalog Number	Backplane Current (mA) @ 5V	Backplane Current (mA) @ 24V	Watts per point	Thermal dissipation, min.	Thermal dissipation, max.
1746-NI4	25 mA	85 mA	N/A	2.17 W	2.20 W
1746-NI8	200 mA	100 mA	N/A	3.4 W	3.4 W
1746-NI16I	125 mA	75 mA	N/A	2.43 W	2.43 W
1746-NI16V	125 mA	75 mA	N/A	3.76 W	3.8 W

Analog Output Modules

Catalog Number	Backplane Current (mA) @ 5V	Backplane Current (mA) @ 24V	Watts per point	Thermal dissipation, min.	Thermal dissipation, max.
1746-NO4I	55 mA	195 mA	N/A	4.96 W	5.00 W
1746-NO4V	55 mA	145 mA	N/A	3.04 W	3.80 W
1746-NO8I	120 mA	250 mA(1)	N/A	3.76 W	6.6 W
1746-NO8V	120 mA	160 mA(1)	N/A	3.04 W	4.44 W

(1) With jumper set to RACK, otherwise 0.000.

Analog Combination Modules

Catalog Number	Backplane Current (mA) @ 5V	Backplane Current (mA) @ 24V	Watts per point	Thermal dissipation, min.	Thermal dissipation, max.
1746-FIO4I	55 mA	150 mA	N/A	3.76 W	3.80 W
1746-FIO4V	55 mA	120 mA	N/A	3.04 W	3.10 W
1746-NIO4I	55 mA	145 mA	N/A	3.76 W	3.80 W
1746-NIO4V	55 mA	115 mA	N/A	3.04 W	3.10 W

Specialty Modules

Catalog Number	Backplane Current (mA) @ 5V	Backplane Current (mA) @ 24V	Watts per point	Thermal dissipation, min.	Thermal dissipation, max.
1746-BAS-T	150 mA	40 mA(1)	N/A	3.75 W	3.80 W
1746-BLM	110 mA	85 mA	N/A	5.00 W	5.00 W
1746-BTM	110 mA	85 mA	N/A	2.59 W	2.59 W
1746-HSCE	320 mA	0 mA	N/A	1.60 W	1.60 W
1746-HSCE2	250 mA	0 mA	N/A	1.25 W	1.25 W
1746-HSRV	300 mA	0 mA	N/A	1.50 W	1.50 W
1746-HSTP1	200 mA	90 mA	N/A	1.50 W	1.50 W
1746-INT4	110 mA	85 mA	N/A	1.26 W	1.26 W
1746-NR4	50 mA	50 mA	N/A	1.50 W	1.50 W
1746-NR8	100 mA	55 mA	N/A	1.82 W	1.82 W
1746-NT4	60 mA	40 mA	N/A	0.80 W	0.80 W
1746-NT8	120 mA	70 mA	N/A	2.28 W	2.28 W
1746-QS	1000 mA	200 mA	N/A	9.80 W	9.80 W
1746-QV	250 mA	0 mA	N/A	1.075 W	1.075 W

(1) When using the 1747-BAS or 1747-KE modules to supply power to an AIC, add 0.085 A (the current loading for the AIC) to the 1747-BAS or 1747-KE module's power supply loading value at 24V DC.

Communication Modules

Catalog Number	Backplane Current (mA) @ 5V	Backplane Current (mA) @ 24V	Watts per point	Thermal dissipation, min.	Thermal dissipation, max.
1747-ACN15	900 mA	0 mA	N/A	4.50 W	4.50 W
1747-ACNR15	900 mA	0 mA	N/A	4.50 W	4.50 W
1747-ASB	375 mA	0 mA	N/A	1.875 W	1.875 W
1747-BSN	800 mA	0 mA	N/A	4.00 W	4.00 W
1747-DCM	360 mA	0 mA	N/A	1.80 W	1.80 W
1747-KE	150 mA	40 mA(1)	N/A	3.75 W	3.80 W
1747-KFC15	640 mA	0 mA	N/A	3.20 W	3.20 W
1747-SCNR	900 mA	0 mA	N/A	4.50 W	4.50 W
1747-SDN	500 mA	-- mA	N/A	2.50 W	2.50 W
1747-SN	600 mA	0 mA	N/A	4.50 W	4.50 W

(1) When using the 1747-BAS or 1747-KE modules to supply power to an AIC, add 0.085 A (the current loading for the AIC) to the 1747-BAS or 1747-KE module's power supply loading value @ 24V DC.

Peripheral Devices

Catalog Number	Backplane Current (mA) @ 5V	Backplane Current (mA) @ 24V	Watts per point	Thermal dissipation, min.	Thermal dissipation, max.
1747-AIC	0 mA	85 mA	N/A	2.00 W	2.00 W
1747-UIC(1)	N/A	N/A	N/A	N/A	N/A
1747-PSD	N/A	N/A	N/A	N/A	N/A
1761-NET-AIC(2)	0 mA	0 mA	N/A	2.50 W	2.50 W
1761-NET-DNI	0 mA	0 mA	N/A	2.50 W	2.50 W
1761-NET-ENIW	0 mA	0 mA	N/A	2.50 W	2.00 W

(1) 1747-UIC power consumption is less than 100 mA.

(2) Current for the 1761-NET-AIC and 1761-NET-ENI(W) must be supplied from an external 24V DC source.

Power Supply Heat Dissipation Graphs

Use the graphs below for determining the power supply dissipation in step 2 of the Example Worksheet for Calculating Heat Dissipation.

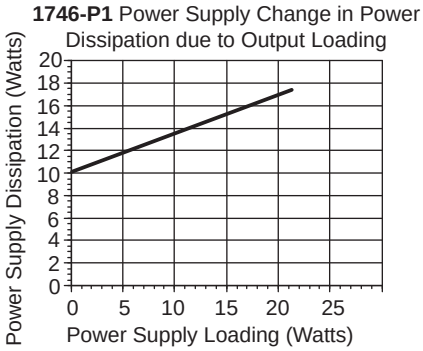

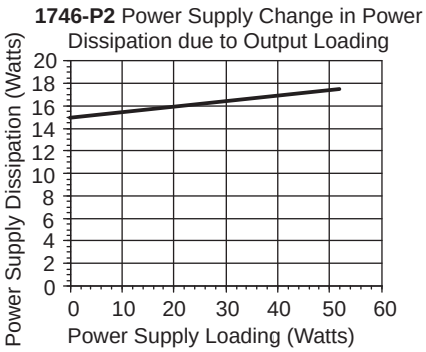

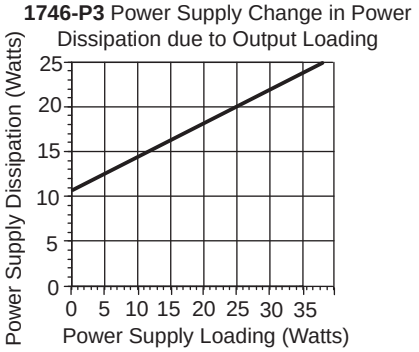

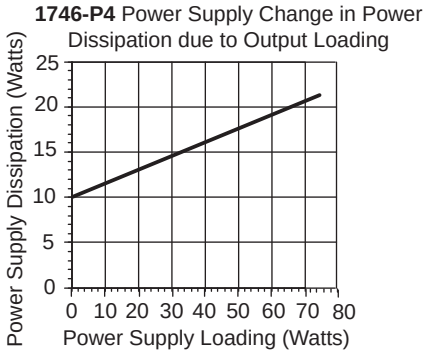

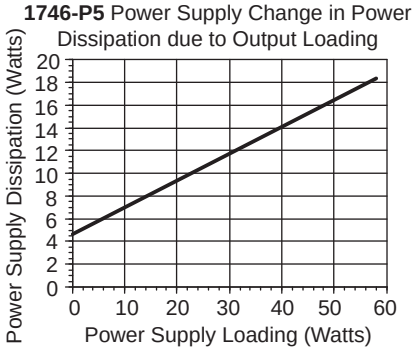

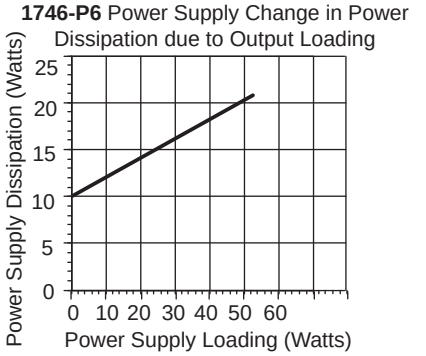

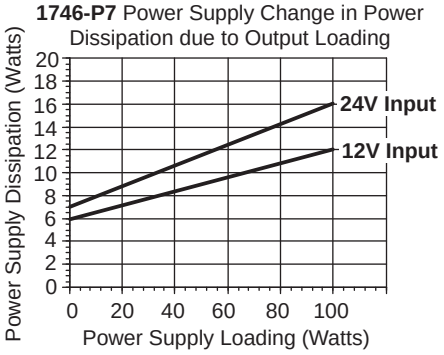

Heat Dissipation Worksheet Example

Procedure for calculating the total heat dissipation for the controller								
1. Write the total watts dissipated by the processor, I/O, specialty modules, and any peripheral devices attached to the processor.								
Chassis Number 1			**Chassis Number 2**			**Chassis Number 3**		
Slot	**Cat. No.**	**Heat Dis (Watts)**	**Slot**	**Cat. No.**	**Heat Dis (Watts)**	**Slot**	**Cat. No.**	**Heat Dis (Watts)**
0	1747-L511	1.75	4	1746-IA16	4.8			
1	1746-BAS	3.8	5	1746-IA16	4.8			
2	1746-IAB	2.4	6	1746-OW16	5.5			
3	1746-OV8	6.9	7	1746-OW16	5.7			
Peripheral Device	1747-DTAM	2.5	Peripheral Device			Peripheral Dev		
Peripheral Device			Peripheral Device			Peripheral Dev		
2. Add the heat dissipation values together for your total chassis heat dissipation.		**17.35**	2. Add the heat dissipation values together for your total chassis heat dissipation.		**20.8**	2. Add the heat dissipation values together for your total chassis heat dissipation.		
3. Calculate the power supply loading for each chassis (minimum watts) for each device. ✶								
Chassis Number 1			**Chassis Number 2**			**Chassis Number 3**		
Slot	**Cat. No.**	**Heat Dis (Watts)**	**Slot**	**Cat. No.**	**Heat Dis (Watts)**	**Slot**	**Cat. No.**	**Heat Dis (Watts)**
0	1747-L511	1.75	4	1746-IA16	0.425			
1	1746-BAS	3.75	5	1746-1A16	0.425			
2	1746-IA8	0.25	6	1746-OW16	5.17			
3	1746-OV8	0.675	7	1746-OW16	5.17			
User Power			User Power		2.4	User Power		
Peripheral Device	1747-DTAM	2.5	Peripheral Device			Peripheral Device		
4. Add the heat dissipation values together for your power supply loading.		**8.925**	4. Add the heat dissipation values together for your power supply loading.		**13.59**	4. Add the heat dissipation values together for your power supply loading.		
5. Use the power supply loading (step 4) for each chassis and the graphs on page 76 to determine power supply dissipation.		**13.0**	5. Use the power supply loading (step 4) for each chassis and the graphs on page 76 to determine power supply dissipation.		**15.0**	5. Use the power supply loading (step 4) for each chassis and the graphs on page 76 to determine power supply dissipation.		
6. Add the chassis dissipation (step 2) to the power supply dissipation (step 5).		**30.35**	6. Add the chassis dissipation (step 2) to the power supply dissipation (step 5).		**35.8**	6. Add the chassis dissipation (step 2) to the power supply dissipation (step 5).		
7. Add the values together from 6 step across to the right.								**66.15**
8. Convert value from step 7 to BTUs/hr by multiplying total heat dissipation of controller by 3.414.								**225.84**

✶ If you have a device connected to user power, multiply 24V dc by the amount of current used by that device. Include user power in the total power supply loading.

Step 6 - Select:

- *the appropriate RSLogix 500 package* for your application
- *other software packages, such as RSNetworx for ControlNet or RSNetworx for DeviceNet, if required*

RSLogix 500 Software

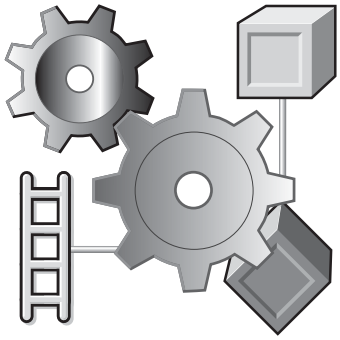

Select Programming Software

Familiar ladder diagram programming makes the SLC 500 family easy to program using a personal computer and RSLogix 500 Programming Software.

The RSLogix 500 ladder logic programming package was the first PLC programming software to offer unbeatable productivity with an industry-leading user interface. RSLogix 500 is compatible with programs created using Rockwell Software's DOSbased programming packages for the SLC 500 and MicroLogix families of processors, making program maintenance across hardware platforms convenient and easy.

RSLogix 500 may be used with Windows 98, Windows NT (4.0), Windows 2000, or Windows XP.

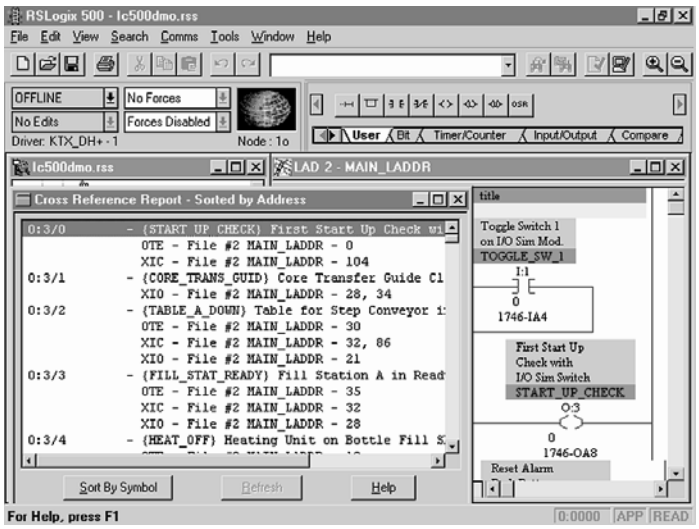

Flexible, Easy-to-use Editing Features

Create application programs without worrying about getting the syntax correct. A Project Verifier builds a list of errors that you can navigate through to make corrections at your convenience.

Powerful online editors allow you to modify your application program while the process is still operating. The Test Edits feature tests the operation of your modification before it becomes a permanent part of the application program. Online and offline editing sessions are limited only by the amount of available RAM.

Drag-and-drop editing lets you quickly move or copy instructions from rung to rung within a project, rungs from one subroutine or project to another, or data table elements from one data file to another.

Context menus for common software tools are quickly accessible by clicking the right mouse button on addresses, symbols, instructions, rungs, or other application objects. This convenience provides you with all the necessary functionality to accomplish a task within a single menu. This is a time-saving feature because you don't have to remember the placement of functionality options in the menu bar.

Point-and-Click I/O Configuration

The easy-to-use I/O Configurator lets you click or drag-and-drop a module from an all-inclusive list to assign it to a slot in your configuration. Advanced configuration, required for specialty and analog modules, is easily accessible. Convenient forms speed entry of configuration data. An I/O auto configuration feature is also available.

Powerful Database Editor

Use the Symbol Group Editor to build and classify groups of symbols so that you can easily select portions of your recorded documentation for use across multiple projects. The Symbol Picker list allows you to assign addresses or symbols to your ladder logic instructions simply by clicking on them.

Export your database to Comma-Separated-Value (CSV) format to use or manipulate the data in your favorite spreadsheet program. When finished, simply import the CSV file into RSLogix 500.

Diagnostics and Troubleshooting Tools

Quickly locate the specific area in the application that is causing a problem with Advanced Diagnostics. Diagnose the interaction of output instructions within a section of your program by viewing them at the same time.

Simultaneously examine the status of bits, timers, counters, inputs and outputs all in one window with the Custom Data Monitor. Each application project you create can have its own Custom Data Monitor window.

Use the tabbed Status displays to easily review status bit settings specific to your application programming, including Scan Time and Math Register information, Interrupt settings, and more.

Assistance on Demand

Comprehensive online help provides an instruction reference as well as step by step instructions for common tasks.

RSLogix 500 Programming Packages

All of the packages described in the table below are English versions on CD-ROM. They can be used with Windows 98, Windows 2000, Windows ME, Windows XP, or Windows NT (4.0) only.

RSLogix 500 Software

Description		
RSLogix 500 Programming for the SLC 500 and MicroLogix Families	9324-RL0300ENE	Create, modify, and monitor application programs used by both the SLC 500 and MicroLogix Programmable Controller families.
RSLogix 500 Starter	9324-RL0100ENE	An effective solution for cost-consious or entrylevel users, this package provides the basic functionality of the full-featured version with some of the advanced features disabled.
RSLogix 500 Professional	9324-RL0700NXENE	This package combines the features of the RSLogix 500 Standard plus Microsoft VBA scripting capability, and includes RSLogix Emulate 500, RSNetworx for ControlNet RSNetworx for EtherNet/IP and RSNetworx for DeviceNet.

IMPORTANT You must provide a means of communication between the PC and the processor.

The table below indicates with an "", which cables are compatible with the SLC 5/01 through 5/05 processors.

Processor	SLC 5/01	SLC 5/02	SLC 5/03	SLC 5/04	SLC 5/05
1747-UIC	✓		✓	✓	
	requires 1747-C13		requires 1747-C13 requires 1747-CP3	requires 1747-CP3	
1747-CP3			✓	✓	✓
1747-KTX, -PKTX	✓			✓	
	requires 1784-CP14			requires 1784-CP13	

Processor	SLC 5/01	SLC 5/02	SLC 5/03	SLC 5/04	SLC 5/05
1747-PCMK	✓			✓	
	requires 1784-PCM4			requires 1784-PCM6	
10Base-T Ethernet					✓

RSLogix 500 Software Support

Warranty

Rockwell Software provides a full one-year limited warranty for RSLogix 500 programming software products.

Support Continuation Agreements

You can purchase additional one-year terms of support. Orders for support continuation agreements must be accompanied by your name, address, software serial number and version number (or a copy of your registration card). Contact your local Allen-Bradley sales office or authorized distributor.

RSLinx Software

RSLinx software is a complete communication server providing plant-floor device connectivity for a wide variety of software applications such as RSLogix 5, RSLogix 500, and RSLogix 5000, RSView32, RSView Enterprise Series, and RSSql/RSBizWare software. In addition, several open interfaces are provided for third-party HMI, data collection and analysis packages, and custom client-application software. RSLinx software can support multiple software applications simultaneously, communicating to a variety of devices on many different networks.

RSLinx software, version 2.x, is now joined by RSLinx Enterprise software, a new product within the RSLinx family that provides unparalleled connectivity to Logix processors. RSLinx Enterprise software currently can support working as a data server for widely distributed RSView Supervisory Edition products, RSSql, RSBizWare Historian, and RSBizWare PlantMetrics applications, RSView Machine Edition software including PanelView Plus and VersaView hardware platforms, and RSView Supervisory Edition Station software.

You can communicate from anywhere to anywhere using RSLinx software.

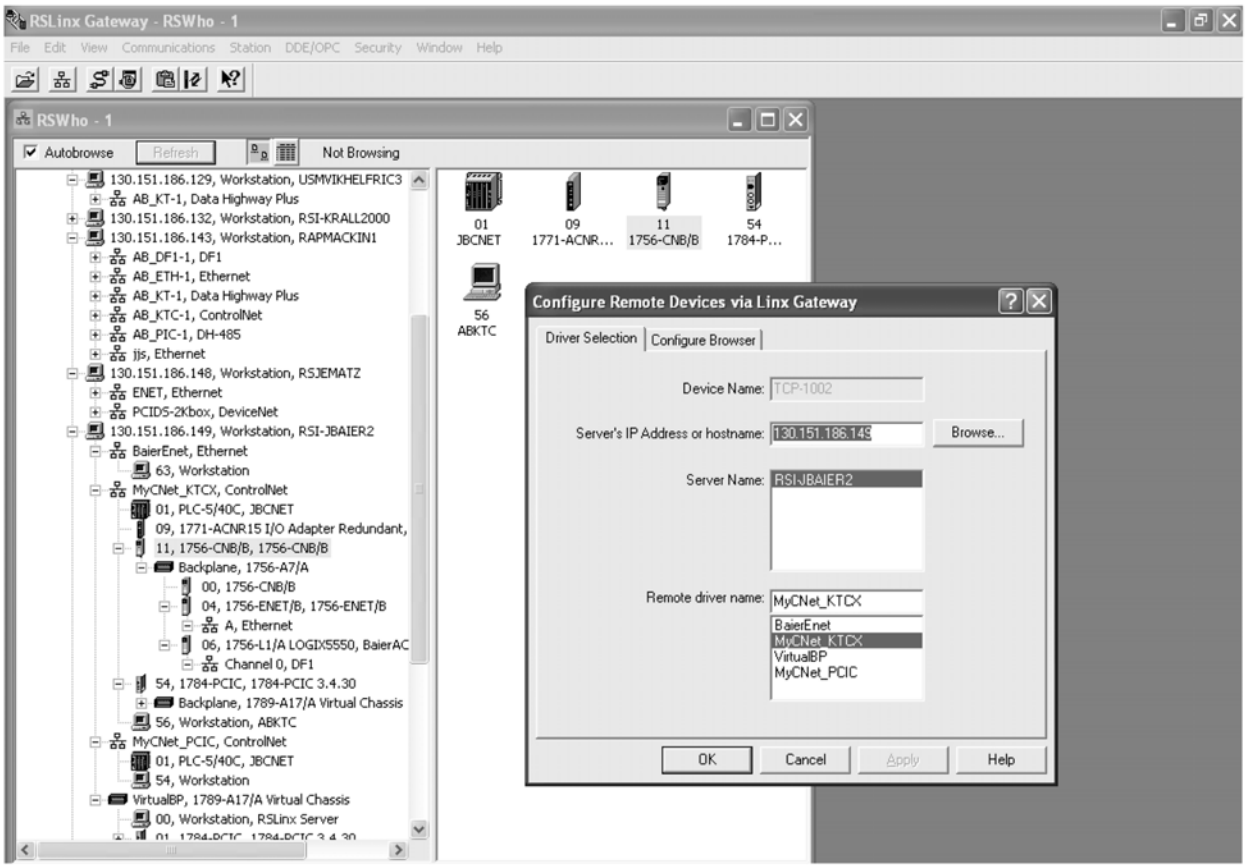

RSLinx Software Requirements

Component	Description
Personal computer	Pentium100 MHz processor (faster processors will improve performance)
Operating system	Supported operating systems: • Microsoft Windows XP • Microsoft Windows 2000 • Microsoft Windows NT version 4.0 with Service Pack 3 or greater • Microsoft Windows ME • Microsoft Windows 98
RAM	32 MB of RAM min 64 MB or more of RAM recommended
Hard disk space	35 MB of free hard disk space (or more based on application requirements)
Video requirements	16-color VGA graphics display 800 x 600 or greater resolution

In most cases, RSLinx Lite software comes bundled with controller programming software packages.

You can also download RSLinx Lite for free from the Software Updates link on the Get Support Now website at http://suport.rockwellautomation.com.

Select the RSLinx Software Package

Catalog Number	RSLinx Products
Available only bundled with other products such as RSLogix software products.	Pentium100 MHz processor (faster processors will improve performance)
9355-WABSNENE	Supported operating systems: • Microsoft Windows XP • Microsoft Windows 2000 • Microsoft Windows NT version 4.0 with Service Pack 3 or greater • Microsoft Windows ME • Microsoft Windows 98
9355-WABOEMENE	32 MB of RAM min 64 MB or more of RAM recommended
9355-WABENE	35 MB of free hard disk space (or more based on application requirements)
9355-WABGWENE	RSLinx Gateway
9355-WABCENE	RSLinx SDK
9355-RSLETENE	RSLinx Enterprise

RSNetWorx Software

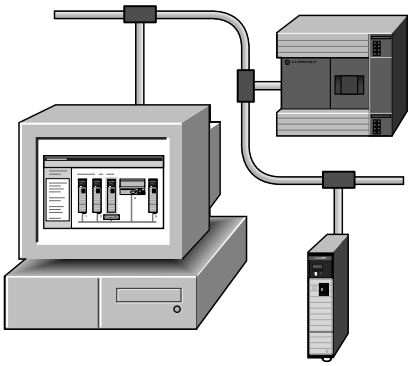

RSNetWorx software is the configuration tool for your control network. With RSNetWorx software you can create a graphical representation of your network configuration and configure the parameters that define your network.

Use RSNetWorx software for:

- ControlNet software to schedule network components. The software automatically calculates network bandwidth for the entire network, as well as the bandwidth used by each network component. You must have RSNetWorx software to configure and schedule ControlNet networks.
- DeviceNet software to configure DeviceNet I/O devices and create a scan list. The DeviceNet scanner stores the configuration information and scan list.
- EtherNet/IP software to configure EtherNet/IP devices using IP addresses or host names.

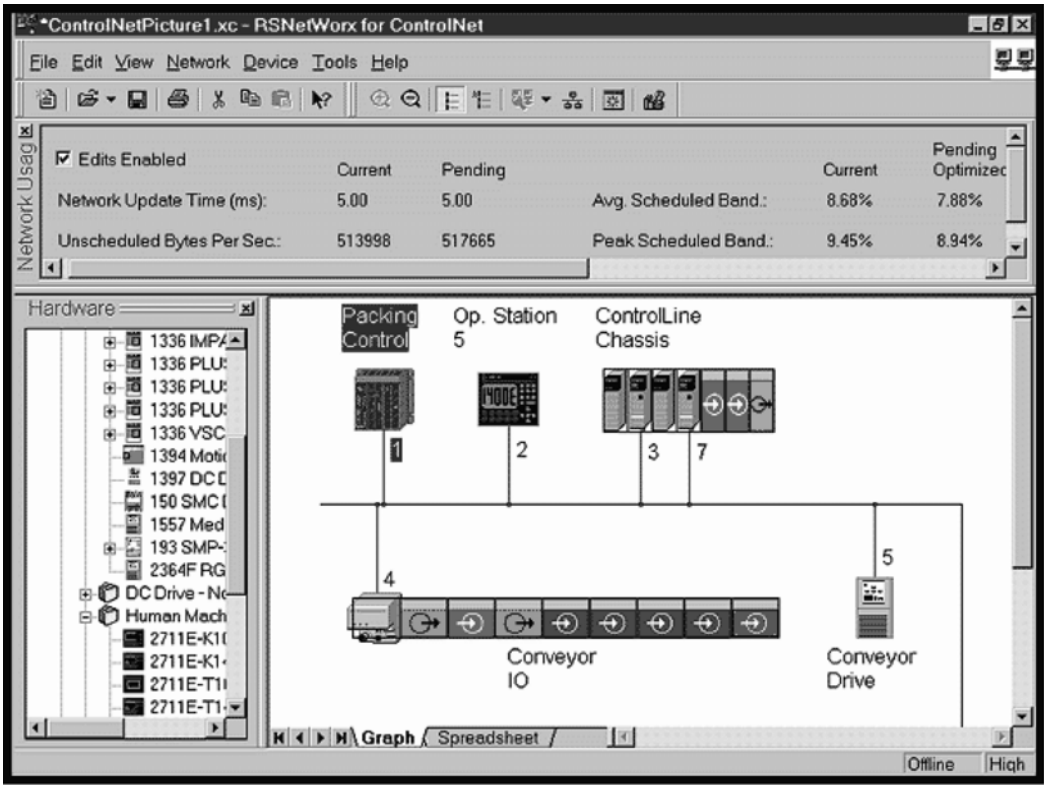
*ControlNetPicture1.xc - RSNetWorx for ControlNet
File Edit View Network Device Tools Help
Edits Enabled
Current
Pending
Network Update Time (ms):
5.00
5.00
Avg. Scheduled Band.:
8.68%
7.88%
Unscheduled Bytes Per Sec.:
513998
517665
Peak Scheduled Band.:
9.45%
8.94%
Hardware
Packing Control
Op. Station 5
ControlLine Chassis
Conveyor IO
Conveyor Drive
Graph
Spreadsheet
Offline
High

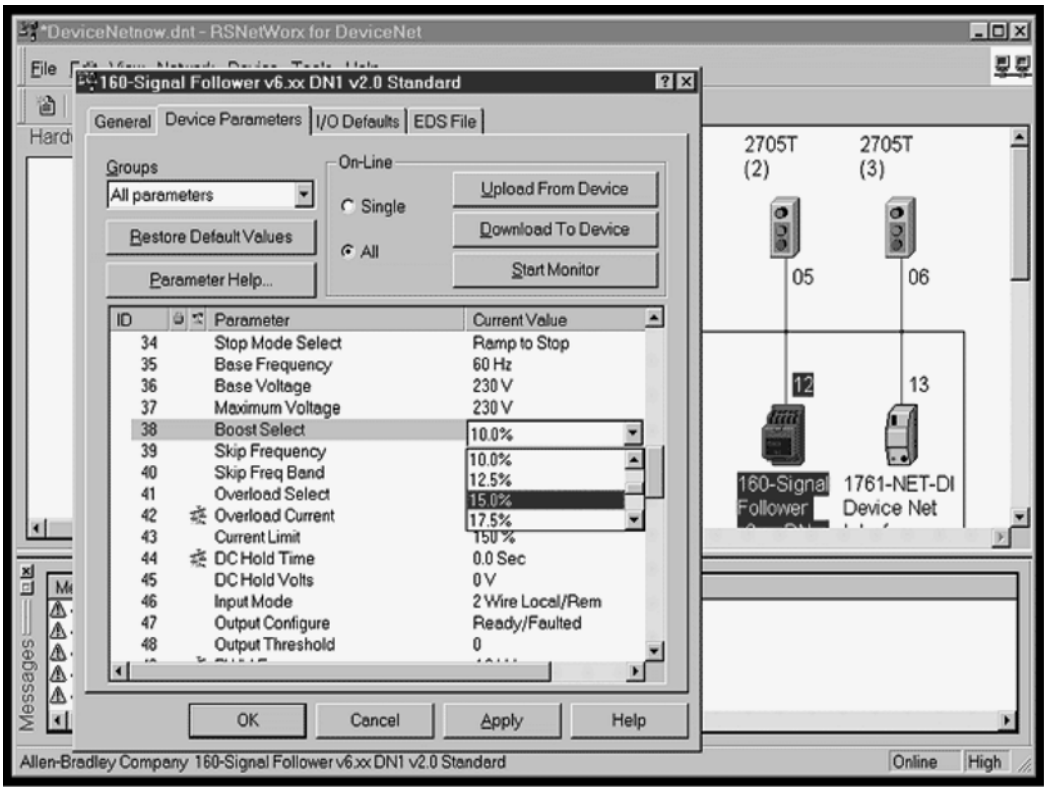
*DeviceNetnow.dnt - RSNetWorx for DeviceNet
160-Signal Follower v6.xx DN1 v2.0 Standard
General
Device Parameters
I/O Defaults
EDS File
Groups
All parameters
Restore Default Values
Parameter Help...
On-Line
Single
All
Upload From Device
Download To Device
Start Monitor
ID
Parameter
Current Value
34 Stop Mode Select Ramp to Stop
35 Base Frequency 60 Hz
36 Base Voltage 230 V
37 Maximum Voltage 230 V
38 Boost Select 10.0%
39 Skip Frequency
40 Skip Freq Band
41 Overload Select
42 Overload Current
43 Current Limit
44 DC Hold Time 0.0 Sec
45 DC Hold Volts 0 V
46 Input Mode 2 Wire Local/Rem
47 Output Configure Ready/Faulted
48 Output Threshold 0
10.0%
12.5%
15.0%
17.5%
OK
Cancel
Apply
Help
2705T (2)
2705T (3)
05
06
12
13
160-Signal Follower
1761-NET-DI Device Net
Messages
Allen-Bradley Company 160-Signal Follower v6.xx DN1 v2.0 Standard
Online
High

RSNetWorx Software Requirements

Component	EtherNet/IP	ControlNet	DeviceNet
Personal computer	Intel Pentium or Pentium-compatible computer		
Operating system	Supported operating systems: • Microsoft Windows XP • Microsoft Windows 2000 • Microsoft Windows 2000 Terminal Server • Microsoft Windows NT version 4.0 with Service Pack 6 or later • Microsoft Windows ME • Microsoft Windows 98		
RAM	32 MB of RAM min More memory is required for large networks		
Hard disk space	Minimum: 108 MB (includes program and hardware files) Full support: 115...125 MB (includes program, online help, tutorial, and hardware files)	Minimum: 115 MB (includes program and hardware files) Full support: 168...193 MB (includes program, online help, tutorial, and hardware files)	Minimum: 190 MB (includes program and hardware files) Full support: 230...565 MB (includes program, online help, tutorial, and hardware files)
Video requirements	16-color VGA graphics adapter 640 x 480 resolution minimum 800 x 600 resolution recommended		
Other	RSLinx Lite software, version 2.41 or later, to use RSNetWorx software online	RSLinx Lite software, version 2.4 or later, to use RSNetWorx software online	RSLinx Lite software, version 2.4 or later, to use RSNetWorx software online

In some cases, RSNetWorx software comes bundled with controller programming software packages.

Select the RSNetWorx Software Package

Catalog Number	Description
9357-CNETL3	RSNetWorx for ControlNet software
9357-DNETL3	RSNetWorx for DeviceNet software
9357-ENETL3	RSNetWorx for Ethernet/IP software
9357-ANETL3	RSNetWorx for ControlNet, Ethernet/IP and DeviceNet software
9357-CNETMD3E	RSNetWorx for ControlNet software with MD, includes DriveExecutive Lite software
9357-DNETMD3E	RSNetWorx for DeviceNet software with MD
9357-ENETMD3E	RSNetWorx for EtherNet/IP software with MD
9357-ANETMD3E	RSNetWorx for ControlNet, DeviceNet, and Ethernet/IP software with MD

RSLogix Emulate 500 Software

Test and debug all of your ladder logic programs prior to commissioning and startup. RSLogix Emulate 500 software is a Microsoft Windows software package that emulates

one or more SLC 500 processors. You determine which ladder programs you want to run and RSLogix Emulate scans the ladder logic like an actual processor.

RSLogix Emulate 500 software may be used with Windows 2000 (with Service Pack 2 or greater), Windows XP (with Service Pack 1 or greater), or Windows NT (version 4.00 with Service Pack 6A or greater). It is included in the RSLogix 500 Professional Programming Software package.

Summary

Sample System Spreadsheet

Use a spreadsheet to record the amount and type of devices your SLC 500 system requires. For example, this sample system,

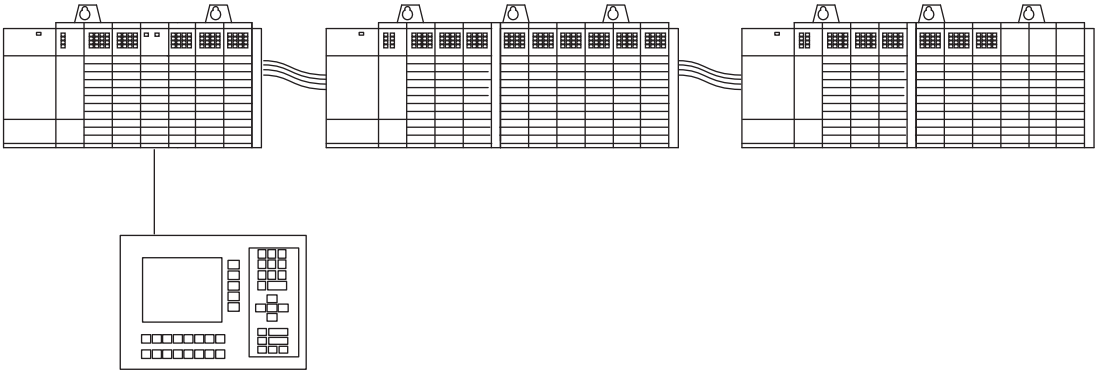

could result in this spreadsheet:

Device	I/O Points Needed	Catalog Number	I/O Points pe Module	Number of Modules
120V AC Digital Inputs	73	1746-IA8	8	10
120V ac Digital Outputs	25	1746-OA8	8	4
24V dc Digital Inputs	43	1746-IB16	16	3
24V dc Digital Outputs	17	1746-OB16	16	2
Isolated Relay Outputs	11	1746-OX8	8	2
4…20 mA Analog Inputs	7	1746-NI8	8	1
Remote I/O Scanner	N/A	1747-SN	N/A	1
Power Supply	N/A	1746-Px	N/A	3
SLC 500 Processor	N/A	1746-L5xx	N/A	1
Card Slot Fillers	N/A	1746-N2	N/A	3
SLC 500 Chassis	N/A	1746-A7	N/A	1
		1746-A10		2
PanelView Terminal	N/A	2711 series	N/A	N/A

System Selection Checklist

✓	Steps for Specifying an SLC 500 System	Remember to consider
	1 Select I/O Modules	• module current and voltage considerations, electronic protection, input/output isolation • IFMs or pre-wired cables
	2 Select Communication Modules/Devices	• network communication requirements • appropriate communication cables • software requirements (i.e. RSNetWorx)
	3 Select an SLC 500 Processor	• memory, I/O, speed, and programming requirements • memory modules • adapter sockets
	4 Select an SLC 500 Chassis	• chassis with slots for required modules, and for additional • modules to support future growth • card slot fillers (1746-N2) for open slots • interconnect cables
	5 Select an SLC 500 Power Supply	• power supply loading of the entire system • additional capacity for system expansion
	6 Select Programming Software	• most appropriate package for your application needs • PC requirements for RSLogix 500 Programming Software

Blank Power Supply Selection Worksheet

Procedure							
1. For each slot of the chassis that contains a module, list the slot number, catalog number of module, and its 5 V and 24 V maximum currents. Also include the power consumption of any peripheral devices that may be connected to the processor other than a DTAM, HHT, or PIC - the power consumption of these devices is accounted for in the power consumption of the processor.							
Chassis Number		**Maximum Currents**		**Chassis Number**		**Maximum Currents**	
Slot Number	**Cat. No.**	**5V dc**	**24V dc**	**Slot Number**	**Cat. No.**	**5V dc**	**24V dc**
Peripheral Device				Peripheral Device			
Peripheral Device				Peripheral Device			
2. Add loading currents of all system devices at 5 and 24V dc to determine **Total Current**.				2. Add loading currents of all system devices at 5 and 24V dc to determine **Total Current**.			
3. For 1746-P4 power supplies, calculate total power consumption of all system devices. If not using a 1746-P4, go to step 4.							
Current		**Multiply By**	**=Watts**	**Current**		**Multiply by**	**= Watts**
Total Current at 5V dc		5V		Total Current at 5V dc		5V	
Total Current at 24V dc		24V		Total Current at 24V dc		24V	
User Current at 24V dc		24V		User Current at 24V dc		24V	
Add the Watts values to determine Total Power (cannot exceed 70 W)				**Add the Watts values to determine Total Power (cannot exceed 70 W)**			
4. Choose the power supply from the list of catalog numbers below. Compare the Total Current required for the chassis with the Internal Current capacity of the power supplies. Be sure the Total Current consumption for the chassis is less than the Internal Current Capacity for the power supply, for both 5V and 24V loads.							
		Internal Current Capacity				**Internal Current Capacity**	
Catalog Number		**5V dc**	**24V dc**	**Catalog Number**		**5V dc**	**24V dc**
1746-P1		2.0 A	0.46 A	**1746-P1**		2.0 A	0.46 A
1746-P2		5.0 A	0.96 A	**1746-P2**		5.0 A	0.96 A
1746-P3		3.6 A	0.87 A	**1746-P3**		3.6 A	0.87 A
1746-P4 (See step 3)		10.0 A	2.88 A	**1746-P4 (see step 3)**		10.0 A	2.88 A
1746-P5		5.0 A	0.96 A	**1746-P5**		5.0 A	0.96 A
1746-P6		5.0 A	0.96 A	**1746-P6**		5.0 A	0.96 A
1747-P7✶	12V input	2.0 A	0.46 A	**1747-P7✶**	12V Input	2.0 A	0.46 A
	24V input	3.6 A	0.87 A		24V Input	3.6 A	0.87 A
Required Power Supply				**Required Power Supply**			

✶See P7 current capacity chart on page 69.

Blank Heat Dissipation Worksheet

Procedure for calculating the total heat dissipation for the controller								
1. Write the total watts dissipated by the processor, I/O, and specialty modules, and any peripheral devices attached to the processor.								
Chassis Number 1			**Chassis Number 2**			**Chassis Number 3**		
Slot	**Cat. No.**	**Heat Dis (Watts)**	**Slot**	**Cat. No.**	**Heat Dis (Watts)**	**Slot**	**Cat. No.**	**Heat Dis (Watts)**
Peripheral Device			Peripheral Device			Peripheral Device		
Peripheral Device			Peripheral Device			Peripheral Device		
2. Add the heat dissipation values together for your total chassis heat dissipation.			2. Add the heat dissipation values together for your total chassis heat dissipation.			2. Add the heat dissipation values together for your total chassis heat dissipation.		
3. Calculate the power supply loading for each chassis (minimum watts) for each device. ✶								
Chassis Number 1			**Chassis Number 2**			**Chassis Number 3**		
Slot	**Cat. No.**	**Heat Dis (Watts)**	**Slot**	**Cat. No.**	**Heat Dis (Watts)**	**Slot**	**Cat. No.**	**Heat Dis (Watts)**
User Power			User Power			User Power		
Peripheral Dev			Peripheral Dev			Peripheral Dev		
4. Add the heat dissipation values together for your power supply loading.			4. Add the heat dissipation values together for your power supply loading.			4. Add the heat dissipation values together for your power supply loading.		
5. Use the power supply loading (step 4) for each chassis and the graphs on page 76 to determine power supply dissipation.			5. Use the power supply loading (step 4) for each chassis and the graphs on page 76 to determine power supply dissipation.			5. Use the power supply loading (step 4) for each chassis and the graphs on page 76 to determine power supply dissipation.		
6. Add the chassis dissipation (step 2) to the power supply dissipation (step 5).			6. Add the chassis dissipation (step 2) to the power supply dissipation (step 5).			6. Add the chassis dissipation (step 2) to the power supply dissipation (step 5).		
7. Add the values together from step 6 across to the right.								
8. Convert the value from step 7 to BTUs/hr by multiplying the total heat dissipation of your controller by 3.414.								

✶ If you have a device connected to user power, multiply 24V dc by the amount of current used by that device. Include user power in the total power supply loading.

Rockwell Automation Support

Rockwell Automation provides technical information on the Web to assist you in using its products.
At http://www.rockwellautomation.com/support/, you can find technical manuals, a knowledge base of FAQs, technical and application notes, sample code and links to software service packs, and a MySupport feature that you can customize to make the best use of these tools.

For an additional level of technical phone support for installation, configuration, and troubleshooting, we offer TechConnect support programs. For more information, contact your local distributor or Rockwell Automation representative, or visit http://www.rockwellautomation.com/support/.

Installation Assistance

If you experience a problem within the first 24 hours of installation, review the information that is contained in this manual. You can contact Customer Support for initial help in getting your product up and running.

United States or Canada	1.440.646.3434
Outside United States or Canada	Use the Worldwide Locator at http://www.rockwellautomation.com/support/americas/phone_en.html, or contact your local Rockwell Automation representative.

New Product Satisfaction Return

Rockwell Automation tests all of its products to ensure that they are fully operational when shipped from the manufacturing facility. However, if your product is not functioning and needs to be returned, follow these procedures.

United States	Contact your distributor. You must provide a Customer Support case number (call the phone number above to obtain one) to your distributor to complete the return process.
Outside United States	Please contact your local Rockwell Automation representative for the return procedure.

Documentation Feedback

Your comments will help us serve your documentation needs better. If you have any suggestions on how to improve this document, complete this form, publication RA-DU002, available at http://www.rockwellautomation.com/literature/.

Rockwell Otomasyon Ticaret A.Ş., Kar Plaza İş Merkezi E Blok Kat:6 34752 İçerenköy, İstanbul, Tel: +90 (216) 5698400

www.rockwellautomation.com

Power, Control and Information Solutions Headquarters

Americas: Rockwell Automation, 1201 South Second Street, Milwaukee, WI 53204-2496 USA, Tel: (1) 414.382.2000, Fax: (1) 414.382.4444
Europe/Middle East/Africa: Rockwell Automation NV, Pegasus Park, De Kleetlaan 12a, 1831 Diegem, Belgium, Tel: (32) 2 663 0600, Fax: (32) 2 663 0640
Asia Pacific: Rockwell Automation, Level 14, Core F, Cyberport 3, 100 Cyberport Road, Hong Kong, Tel: (852) 2887 4788, Fax: (852) 2508 1846

Publication 1747-SG001E-EN-E - February 2013

Copyright © 2013 Rockwell Automation, Inc. All rights reserved. Printed in the U.S.A.