FLEX I/O and FLEX I/O-XT

Bulletin 1794

Allen-Bradley
by ROCKWELL AUTOMATION

Selection Guide

What's Inside

Topic	Page
What's New	2
Chapter 1 - About the FLEX I/O System	3
FLEX I/O Overview	3
FLEX I/O XT Overview	4
General FLEX I/O and FLEX I/O-XT Specifications	5
Specify a FLEX I/O or FLEX I/O XT System	6
Chapter 2 - Select FLEX I/O Communication Adapters	7
CIP Network Infrastructure	7
Select a Network	8
EtherNet/IP Network	8
ControlNet Network	9
DeviceNet Network	10
Other Networks – Remote I/O	11
Other Networks – PROFIBUS DP	12
Chapter 3 - Select FLEX I/O Modules	15
Digital I/O Modules	15
Modules Specifications	18
FLEX I/O Analog, Thermocouple, and RTD Modules	30
FLEX I/O Analog Output Modules	42
FLEX I/O Counter Modules	46
Chapter 4 - Select a FLEX I/O Terminal Base Unit	53
Chapter 5 - Select a FLEX I/O Power Supply	55
Power Supply Definitions	55
Power Requirements and Transformer Sizing	56
Appendix A - Select Optional Accessories	57
Appendix B - Mount the FLEX System	59
Additional Resources	61

What's New

This publication contains the following new or updated information. This list includes substantive updates only and is not intended to reflect all changes. Translated versions are not always available for each revision.

Topic	Page
Updated Certifications	5
Updated Input Signal Range and External DC Supply Current for 1794-IE8H	30

About the FLEX I/O System

FLEX I/O Overview

FLEX I/O offers:

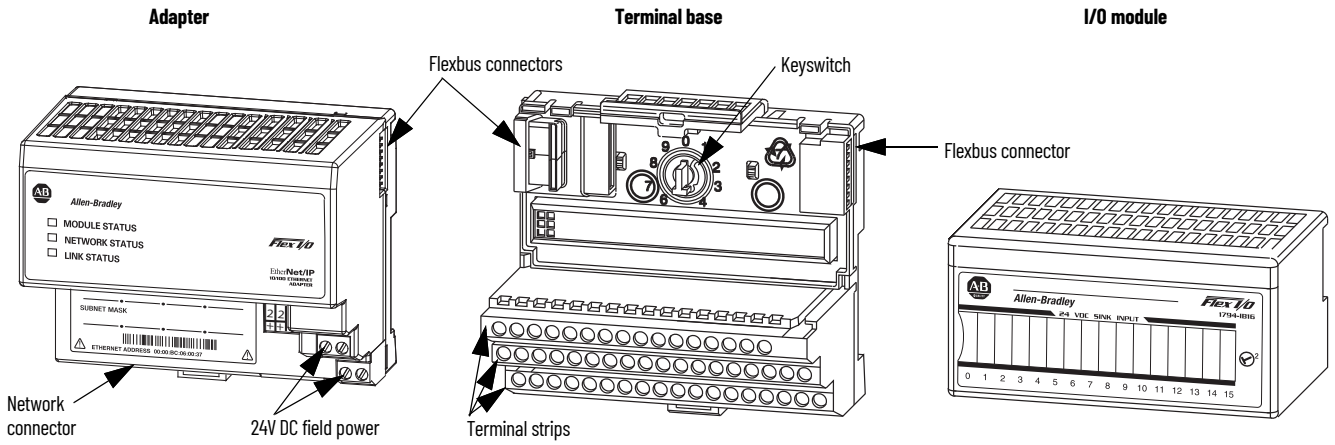

FLEX™ I/O is a Distributed I/O System that connects to several networks including EtherNet/IP™, ControlNet®, and DeviceNet®.

Flexible, low-cost, modular I/O for distributed applications. FLEX I/O offers all the functions of larger, rack-based I/O without the space requirements.

Independently select the I/O, termination style, and network to meet your application needs.

Two separate connection terminals for field power let you daisy chain power connections to adjacent terminal bases.

One adapter communicates with up to eight I/O modules. Allows connection to:

- 256 digital input/output points
- 96 analog input/output points
- Mix of I/O to meet your needs

Modularity of FLEX I/O system provides choice of network and ease of expansion. The wiring terminations are done almost entirely on the terminal base. Terminal base termination selection includes screw-clamp, spring-clamp, and cage-clamp to wire directly to 2-wire, 3-wire, or 4-wire devices. Additional options of D-shell, knife disconnect, and fused terminal bases are also available.

Adjustable keyswitch helps prevent incorrect module insertion into a pre-configured terminal base.

Terminal bases can be exchanged without moving other bases in your system.

If desired, connect individual power supplies to each base to isolate modules. Plug the I/O module into the terminal base to connect the I/O bus and field devices.

Remove and insert modules under power. No direct wiring to the module enables you to change modules without disturbing field wiring or system power.

Mix and match I/O modules. There is a wide variety of digital, analog, and specialty modules.

Each FLEX I/O system contains at least one adapter, one terminal base, and one I/O module.

You can power the system with a FLEX power supply (1794-PS13 or 1794-PS3), a 1606 switched-mode power supply, or any other compatible power source. Use the terminal block on the terminal base to wire your field devices directly. Wiring directly saves:

- Installation and testing time
- Multiple, long wiring runs, and external terminal blocks
- Control cabinet panel space

FLEX I/O provides additional savings if system problems develop. Combining your field-wiring terminations and the I/O interface into the same location saves you time and money by making your system easier to maintain and troubleshoot. Additionally, the full-featured FLEX I/O system lets you, in non-hazardous location, remove, and insert modules under backplane power without disrupting your system.

Your FLEX I/O system can communicate on EtherNet/IP, ControlNet, DeviceNet, and many other open networks including, but not limited to Remote I/O and PROFIBUS DP.

Adapters and other components are available for adding to your system as your specific application requirements change.

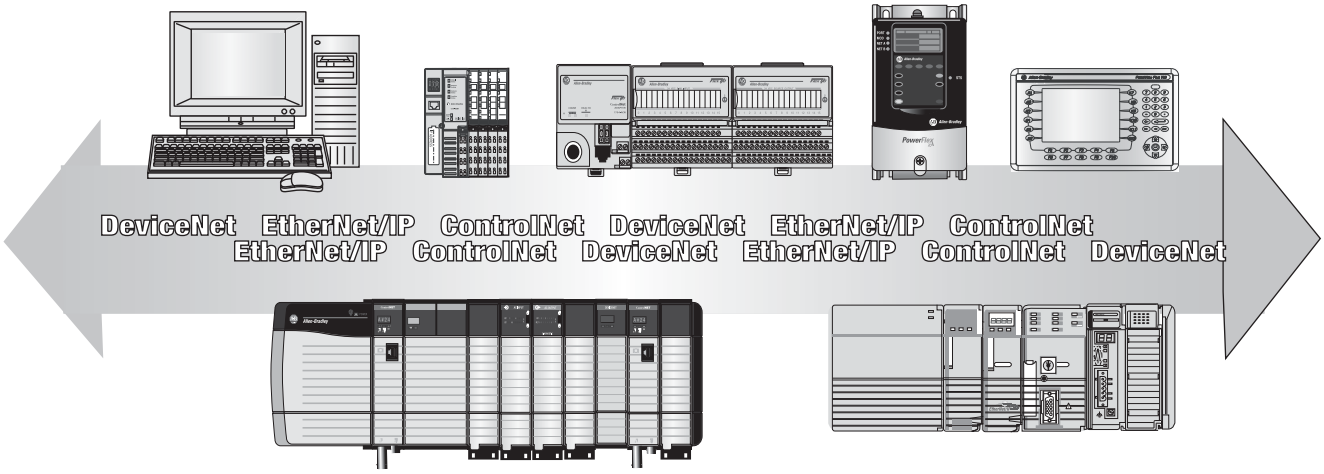

FLEX I/O XT Overview

FLEX I/O-XT™ modules are designated for extreme environment use.

They differ from their non-XT counterparts only in operational temperature ranges and conformal coating is standard for FLEX I/O-XT products.

FLEX I/O-XT modules meet or exceed the following standards:

- ANSI / ISA-S71.04-1985; Class G1, G2, and G3 Environments
- CEI IEC 6065A-4; Class 1 and 2 Environments
- UL 746E
- MIL-1-46058C to ASTM-G21; (Tropicalization and fungicide)

These standards specify common emissions and classify their concentration levels in a number of industrial processes. Just a few of the common reactive agents that the FLEX I/O-XT modules protect against are:

- H2S – Hydrogen sulfide
- SO2, SO3 – Sulfur dioxide
- CnHn – Hydrocarbons
- NOx – Oxides of nitrogen
- Cl2 – Wet chlorine / Dry chlorine
- NH3 – Ammonia

General FLEX I/O and FLEX I/O-XT Specifications

The following table shows the similarities and differences between the FLEX I/O and the FLEX I/O-XT specifications.

Specifications Comparison

Attribute[1]	1794 FLEX I/O	1794 FLEX I/O XT
Temperature, operating[2]	0...55 °C (32...131 °F)	-20...+70 °C (-4...+158 °F)
Temperature, nonoperating	-40...+85 °C (-40...+185 °F)	-40...+85 °C (-40...+185 °F)
Relative humidity	5...95% noncondensing	
Shock, operating[3]	30 g peak acceleration, 11 (±1) ms pulse width	
Shock, nonoperating[1]	50 g peak acceleration, 11 (±1) ms pulse width	
Vibration	Tested 5 g @ 10...500 Hz per IEC 68-2-6	
Wire size	0.34 mm^2...2.5 mm^2 (22...12 AWG) stranded copper wire rated at 75 °C (167 °F) or higher 1.2 mm (3/64 in.) insulation max	
Atmospheric protection[4]	Non-conformal coated	Conformal coated to meet or exceed the following standards: • ANSI / ISA-S71.04-1985; Class G1, G2, and G3 Environments • CEI IEC 60065A-4; Class 1 and 2 Environments • UL 746E • MIL-1-46058C to ASTM-G21; (Tropicalization and fungicide)
Certifications (when product is marked)[5]	• UL Listed Industrial Control Equipment • UL Listed for Class I Division 2 Groups A, B, C, D Hazardous Locations • CE Marked for all applicable directives • UKCA marked for all applicable statutory instruments • UKEX • ATEX • IECEx • RoHS • RCM Marked for all applicable acts • TÜV • Morocco • CCC • KC • Marine Certification • SIL 2 Certification • ODVA • ControlNet	

(1) For all other product-specific specifications, including environmental and certification, see the product sections within this selection guide.
(2) Operating temperature may vary per catalog. See the product sections within this selection guide for catalog-specific information.
(3) To maintain these specifications, you must use DIN rail locks.
(4) General specifications does not apply to catalogs that are conformal coated but non-XT modules. See the respective technical data sheet for module-specific data.
(5) See the Product Certification website, rok.auto/certifications for Declarations of Conformity, Certificates, and other certification details.

Specify a FLEX I/O or FLEX I/O XT System

Follow these steps as you specify your FLEX I/O or FLEX I/O XT system:

✓	Step	See	Page
	1. Select a communication adapter. Choose the network for your operating system.	CIP Network Infrastructure Select a Network	7 8
	2. Select I/O modules based on: • Field device • Location of the device • Your application • Number of points needed • Number of points available per module • Number of modules Or use the Integrated Architecture® Builder tool at rok.auto/systemtools.	Digital I/O Modules FLEX I/O Analog, Thermocouple, and RTD Modules FLEX I/O Counter Modules	15 30 46
	3. Select a terminal base. • Choose an appropriate terminal base for your modules.	General Specification Comparison	54
	4. Choose appropriate power supplies. • Choose an appropriate power supply • Ensure sufficient power for the communication adapter and modules	Power Supply Definitions Power Requirements and Transformer Sizing	55 56
	5. Determine mounting requirements and select accessories • Determine whether to panel mount or DIN rail mount the FLEX I/O system and at what orientation (horizontal or vertical) • Choose appropriate optional accessories to enhance your system	Mount the FLEX System 1794-CE1 and 1794-CE3 Extender Cables 1794-NM1 FLEX I/O Mounting Kit 1492-EA35 DIN Rail Locks 1794-LBL FLEX I/O Label Kit	59 57 57 57 58

Select FLEX I/O Communication Adapters

Step 1 – Select:

A communication adapter based on the appropriate network

A FLEX I/O adapter interfaces FLEX I/O modules to an I/O scanner port across a communication network. The FLEX I/O adapter module contains a built-in power supply that converts 24V DC to 5V DC for the backplane to power the FLEX I/O modules.

Your 1794 FLEX I/O system can communicate on:

- EtherNet/IP
- ControlNet, single media, or redundant
- DeviceNet
- Many other open networks including, Remote I/O, PROFIBUS DP, and others from PartnerNetwork™ Technology Partners

CIP Network Infrastructure

The Common Industrial Protocol (CIP™) allows complete integration of control with information, multiple CIP networks, and standard Internet technologies. CIP provides manufacturers with a scalable and coherent architecture incorporating discrete, process, safety, synchronization, and motion applications using the same network technology as the ERP, MES enterprise level applications. Ultimately, network convergence helps align technology with business goals for business process transformation and enterprise-wide visibility.

The following networks share the CIP at their upper levels, while remaining media independent at their lower levels. This allows manufacturers to specify the best network for their application and minimize costly and complex gateways when connecting dissimilar upper level networks.

- EtherNet/IP is an open industrial networking standard that supports implicit and explicit messaging and uses commercial, off-the-shelf Ethernet equipment, and physical media.
- ControlNet allows intelligent, high-speed control devices to share the information required for supervisory control, work-cell coordination, operator interface, remote device configuration, programming, and troubleshooting.
- DeviceNet offers high-speed access to plant-floor data from a broad range of plant floor devices and a significant reduction in wiring.

Select a Network

You can configure your system for information exchange between a range of field devices and a specific scanner. You select the communication adapters for the networks that meet your needs:

Table 1 - Network Comparison by Application Requirement

Application Requirements	Network(1)	Communication Adapter
• Plant management (material handling) • Configuration, data collection, and control on a single, high-speed network • Time-critical applications with no established schedule • Data sent regularly • Internet/Intranet connection • Built-in switch, or high availability requirement (2-port AENTR)	EtherNet/IP	1794-AENT 1794-AENTK 1794-AENTR 1794-AENTRXT
• High-speed transfer of time-critical data between controllers and I/O devices • Deterministic and repeatable data delivery • Media redundancy	ControlNet	1794-ACN15 1794-ACN15K(2)(3) 1794-ACNR15(4) 1794-ACNR15XT(5)
• Connections of low-level devices to plant floor controllers • More diagnostics for improved data collection and fault detection • Less wiring and reduced startup time than a traditional, hard-wired system	DeviceNet	1794-ADN 1794-ADNK
• Connections to Remote I/O networks	Remote I/O	1794-ASB(3) 1794-ASB2(3)
• Connection to PROFIBUS DP and DPV1 networks	PROFIBUS DP PROFIBUS DPV1	1794-APB(3) 1794-APBDPV1

(1) Our PartnerNetwork™ Technology Partners offer communication adapters and other components for connecting to your system as your specific application requirements change. For details go to locator.rockwellautomation.com/Technology and search for products under the FLEX I/O platform.
(2) Modules that have the letter K in the last position of the catalog number, before the series designation, see conformal coated versions of the standard modules. These modules meet the following certifications: ANSI / ISA-S71.04-1985, Class G1, G2, and G3 environments; CEI IEC 6065A-4 Class 1 and 2 environments; UL 746E.
(3) Discontinued catalogs may not have updated specifications. For more information about a specific discontinued catalog, see individual installation instructions.
(4) Modules that have the letter R in the catalog number, before the series designation, see redundancy versions of the standard modules and are meant for redundancy networks.
(5) Modules that have the letters XT in the catalog number, before the series designation, see extended temperatures version of the standard modules.

EtherNet/IP Network

EtherNet/IP is a network suitable for use in an industrial environment and time-critical applications. EtherNet/IP uses standard Ethernet and TCP/IP technologies and an open application layer protocol that is called the CIP. CIP is also the application layer that is used in DeviceNet and ControlNet networks. The open Application Layer protocol makes interoperability and interchangeability of industrial automation and control devices on EtherNet/IP a reality for automation and control applications.

The 1794-AENT and 1794-AENTR connect FLEX I/O to EtherNet/IP enabled controllers such as ControlLogix® or CompactLogix™.

Figure 1 - EtherNet/IP Communication

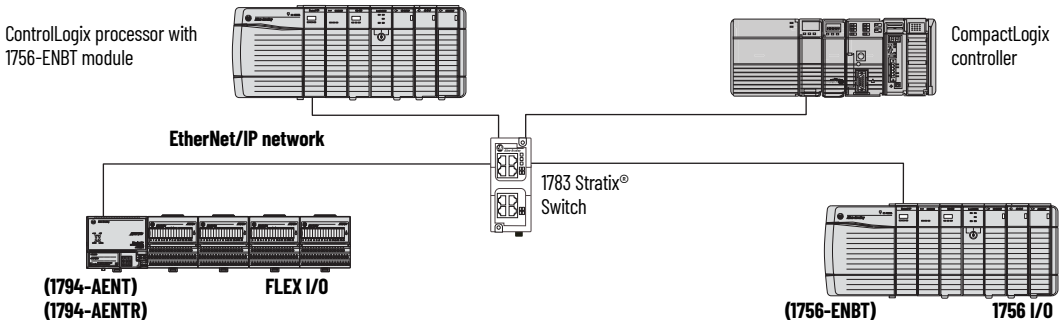

Table 2 - FLEX I/O EtherNet/IP Adapter Specifications

Attribute	1794-AENT	1794-AENTK	1794-AENTR	1794-AENTRXT
I/O module capacity	8			
Communication rate	10/100 Mbps			
Power consumption	550 mA, 440 mA @ 24V DC			

Table 2 - FLEX I/O EtherNet/IP Adapter Specifications (Continued)

Attribute	1794-AENT	1794-AENTK	1794-AENTR	1794-AENTRXT
Power dissipation, max	7.3 W @ 19.2V DC		7.1 W @ 19.2V DC	6.1 W @ 19.2V DC
Thermal dissipation	24.9 BTU/hr @ 24V DC		24.2 BTU/hr @ 24V DC	20.8 BTU/hr @ 24V DC
Power supply 24V current load	450 mA		400 mA @ 24V DC 500 mA max	
Power supply input voltage, nom	24V DC			
Operating voltage range	19.2...31.2V DC (includes 5% AC ripple)			
Ethernet interface	1 – RJ45 category 5		2 – RJ45 category 5	
Dimensions (HxWxD), approx	87 x 94 x 69 mm 3.4 x 3.7 x 2.7 in.		87 x 94 x 92 mm 3.44 x 3.7 x 3.6 in.	
Weight, approx.	179 g (6.31 oz)		227 g (8.01 oz.)	
Temperature, operating	0...55 °C (32...131 °F)			-25...+70 °C (-13...+158 °F)

Device Level Ring Topology

A Device Level Ring (DLR) network is a single-fault tolerant ring network that is intended for the interconnection of automation devices. FLEX I/O modules can connect to a DLR network using EtherNet/IP taps. Figure 2 is an illustration of how FLEX I/O systems can be integrated into a DLR topology.

Figure 2 - FLEX I/O in a DLR Topology

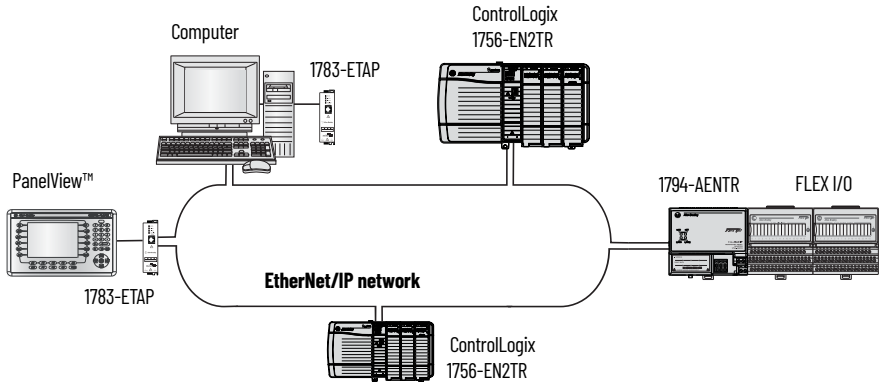

ControlNet Network

ControlNet is a real-time control network that provides high-speed transport of both time-critical I/O and interlocking data and messaging data, including upload/download of programming and configuration data on a single physical media link. The ControlNet network's highly efficient data transfer capability significantly enhances I/O performance and peer-to-peer communication in any system or application where it is used.

The 1794-ACNR15 adapter can accept redundant ControlNet cable media. The 1794-ACN15 is a non-redundant version.

Figure 3 shows the FLEX I/O platform on a ControlNet network.

Figure 3 - ControlNet Communication

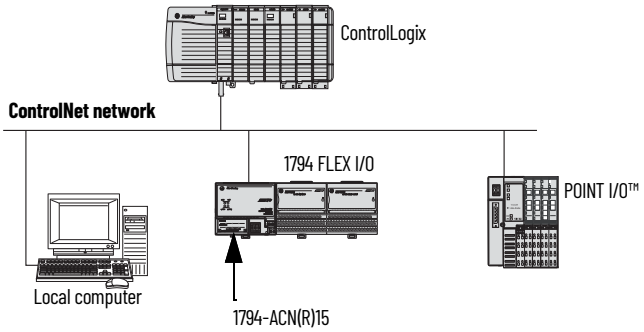

Table 3 - FLEX I/O ControlNet Adapter Specifications

Attribute	1794-ACN15, 1794-ACN15K(1), 1794-ACNR15, 1794-ACNR15XT
I/O module capacity	8
Communication rate	5 Mbps
Power consumption at 24V	7.9 W
Inrush current at 24V	23 A for 2 ms
Power dissipation, max	4.6 W @ 19.2V DC
Thermal dissipation	15.7 BTU/hr @ 19.2V DC
Power supply 24V current load	330 mA
Power supply 24V output current, max	450 mA
Power supply input voltage, nom	24V DC
Operating voltage range	19.2...31.2V DC (includes 5% AC ripple)
ControlNet cable	Allen-Bradley® RG-6/U Quad shield coax, catalog number 1786-RG6 (standard-PVC CM-CL2) or 1786-RG6F/A (high-flex)
Isolation voltage	Tested @ 850V DC for 1 s, user power to system
Dimensions (HxWxD), approx	87 x 94 x 92 mm 3.4 x 3.7 x 3.6 in.
Temperature, operating	-20...+55 °C (-4...+131 °F) -25...+70 °C (-13...+158 °F) - **1794-ACNR15XT only**

(1) Discontinued catalogs may not have updated specifications. For more information about a specific discontinued catalog, see individual installation instructions.

DeviceNet Network

The DeviceNet network is an open low-level network that provides connections between simple industrial devices (such as sensors and actuators) and higher-level devices (such as PLCs and computers). The DeviceNet network uses the proven CIP to provide the control, configure, and data collection capabilities for industrial devices. The DeviceNet network is a flexible network that works with devices from multiple vendors.

Figure 4 shows the FLEX I/O platform on a DeviceNet network.

Figure 4 - DeviceNet Communication

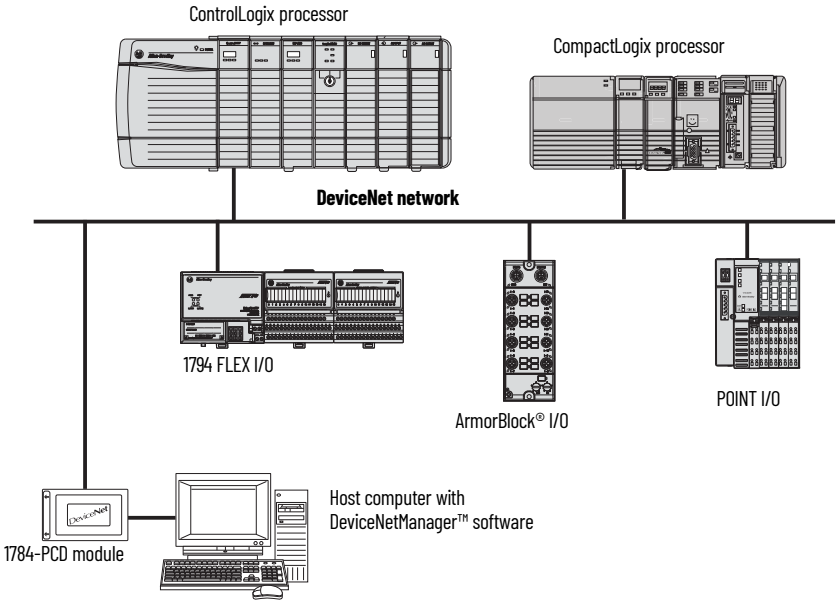

Table 4 - FLEX I/O DeviceNet Adapter Specifications

Attribute	1794-ADN, 1794-ADNK
I/O module capacity	8
Communication rate	125 Kbps 250 Kbps 500 Kbps
Power consumption at 24V	7.9 W
Inrush current at 24V	23 A for 2 ms
Power dissipation, max	4.6 W @ 19.2V DC
Thermal dissipation	15.7 BTU/hr @ 19.2V DC
Power supply 24V current load	330 mA
Power supply 24V output current, max	450 mA
Power supply input voltage, nom	24V DC
Operating voltage range	19.2...31.2V DC (includes 5% AC ripple)
DeviceNet cable	Allen-Bradley part no. 1485C-P1-Cxxx. See DeviceNet Media Design and Installation Guide User Manual, publication DNET-UM072 for more information. Extended Local Cable: 1794-CE1 (0.3 m [0.98 ft]) or 1794-CE3 (0.9 m [2.95 ft])
Isolation voltage	Tested @ 850V DC for 1 s, user power to system
Dimensions (HxWxD), approx	87 x 68 x 69 mm 3.4 x 2.7 x 2.7 in.
Temperature, operating	-20...+70 °C (-4...+158 °F)

Other Networks – Remote I/O

The 1794-ASB and 1794-ASB2 adapters provide connection to the Remote I/O network.

The 1794-ASB2 supports only two FLEX I/O modules. The 1794-ASBLT is only for use with classic PLC 5/15 or PLC 5/25 processors.

ATTENTION: Do not use these Remote I/O adapters with the Classic PLC-5/15 or PLC-5/25 processors. Improper operation of the remote I/O may result.
- 1794-ASB, Series E
- 1794-ASB2, Series D
- 1794-ASB2K, Series D

Figure 5 - Other Network Communication

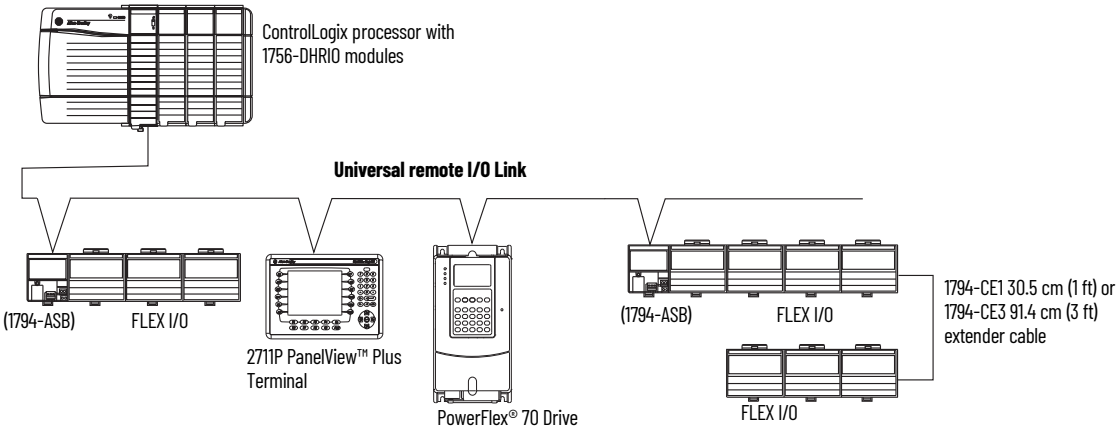

Table 5 - FLEX I/O Remote I/O Adapter Specifications

Attribute	1794-ASB(1), 1794-ASBLT(1)(2)	1794-ASB2(1)
I/O module capacity	8	2
Communication rate	57.6 Kbps 115.2 Kbps 230.4 Kbps	
Power consumption at 24V	7.9 W	4.2 W
Inrush current at 24V	23 A for 2 ms	
Power dissipation, max	4.6 W @ 19.2V DC	3.4 W @ 19.2V DC
Thermal dissipation	15.7 BTU/hr @ 19.2V DC	11.6 BTU/hr @ 19.2V DC
Power supply 24V current load	330 mA	175 mA
Power supply input voltage, nom	24V DC	
Operating voltage range	19.2...31.2V DC (includes 5% AC ripple)	
DeviceNet cable	Remote I/O: Belden 9463 or equivalent Allen-Bradley pin connector part no. 942029-03	
Isolation voltage	Tested @ 850V DC for 1 s, user power to system	
Dimensions (HxWxD), approx	87 x 68 x 69 mm 3.4 x 2.7 x 2.7 in.	
Temperature, operating	-20...+55 °C (-4...+131 °F)	

(1) Discontinued catalogs may not have updated specifications. For more information about a specific discontinued catalog, see individual installation instructions.
(2) The 1794-ASBLT is only for use with Class PLC 5/15 or PLC 5/25 processors.

Other Networks – PROFIBUS DP

Use the 1794-APB or 1794-APBDPV1 adapter to connect to a PROFIBUS DP network.

Table 6 - FLEX I/O PROFIBUS I/O Adapter Specifications

Attribute	1794-APB(1)	1794-APBDPV1
I/O module capacity	8	
Communication rate	57.6 Kbps 115.2 Kbps 230.4 Kbps	All rates up to 12 Mbps
Power consumption at 24V	7.9 W	9.6 W
Inrush current at 24V	23 A for 2 ms	
Power dissipation, max	5.3 W @ 19.2V DC	4.2 W @ 19.2V DC
Thermal dissipation	17.9 BTU/hr @ 19.2V DC	14 BTU/hr @ 19.2V DC
Power supply 24V current load	450 mA	640 mA
Power supply input voltage, nom	24V DC	
Operating voltage range	19.2...31.2V DC (includes 5% AC ripple)	
PROFIBUS connector	9-pin D-shell; PROFIBUS standard drop cable	

Table 6 - FLEX I/O PROFIBUS I/O Adapter Specifications (Continued)

Attribute	1794-APB[1]	1794-APBDPV1
Isolation voltage	Tested @ 850V DC for 1 s, user power to system	Tested @ 850V DC for 60 s, PROFIBUS to backplane to power
Dimensions (HxWxD), approx	87 x 68 x 69 mm 3.4 x 2.7 x 2.7 in.	
Temperature, operating	0...55 °C (32...131 °F)	

(1) Discontinued catalogs may not have updated specifications. For more information about a specific discontinued catalog, see individual installation instructions.

Our PartnerNetwork™ Technology Partners offer adapters for connecting to RS-232/RS-422/RS-485, Serial/DF1, and Modbus. For details, go to locator.rockwellautomation.com/Technology and search for products under the FLEX I/O platform.

Notes:

Select FLEX I/O Modules

Step 2 – Select:

I/O Modules

The FLEX I/O module plugs into the terminal base, connecting to the I/O bus and field devices. Since there is no direct wiring to the I/O module, you can remove and insert modules under backplane power, enabling you to change modules without disturbing field wiring, other I/O modules, or FLEX backplane power. This minimizes costly downtime and the inefficiencies of restarting a system.

The choices and flexibility you have with I/O types range from digital and analog to temperature and motion control. FLEX I/O allows you to use as many as eight terminal bases per adapter, which can provide a maximum of 256 digital I/O points or 96 analog channels per adapter. You can mix and match digital and analog I/O with mounting and wiring options, supplying you with a successful distributed system solution.

This flexibility gives you the following choices of I/O signal types:

- Digital: AC and DC voltage signals
- Analog: Current or voltage
- Relay: Normally open, 2 A capability
- Protected outputs: Non-latching, latching, and with diagnostics
- Temperature: Thermocouple or RTD
- Motion: High-speed counters, flow metering, and totalization
- Combo modules: Combination of input and output capability
- Harsh environments: Use FLEX I/O-XT modules in harsh environments.

Digital I/O Modules

Digital I/O modules interface with field devices such as:

- Push button and limit switches
- On/Off actuators such as motor starters, pilot lights, and annunciators
- Relay contacts

Features

Modules are available in different densities ranging from 8 to 32 points.

- Digital I/O modules cover a wide electrical range:
  - 120V AC: Input/output and isolated input/output, 8 and 16 point
  - 220V AC: Input/output, 8 point
  - 24V DC: Input/output/combination, sink/source, protected, electronically fused, diagnostic, 8, 16, and 32 point
  - 48V DC: Sink input/source putput, 16 point
  - Relay: Sink/source, 8 point
- Isolated inputs and outputs can be used in applications such as motor control centers where individual control transformers are used.
- Protected outputs (P) have electronic protection, which acts to shut down the output in reaction to a short circuit, overload, or over-temperature condition.
  Recovery from shutdown is automatic upon removal of the output fault. No fault status is provided to the processor.
- Electronic Fused (EP) module acts to open the output when a fault occurs. The fuse can be reset by operating a push button, via software, or by cycling the input power. Fault status is provided to the processor.

- Diagnostic (D) modules detect, indicate, and report to the processor the following faults:
  - Open input or output field devices or wiring
  - Shorted output field devices
  - Shorted input or output wiring
  - Reverse polarity of user supply wiring
- Selectable input filter times from <1...60 ms.
- LED for each channel indicating the status of:
  - Corresponding input device
  - Output signal

Table 7 - Digital I/O Module Summary

Catalog Number	Inputs	Outputs	Terminal Base Unit	Electrical Range	Module Type
AC Modules					
1794-IA8	8	—	1794-TBN, 1794-TB2, 1794-TB3, 1794-TB3S, 1794-TBKD, 1794-TB3K, 1794-TB3SK, 1794-TBNK	120V AC	Nonisolated inputs
1794-IA8I					Isolated inputs
1794-IA16, 16K	16		1794-TB3, 1794-TB3S, 1794-TBN[1], 1794-TB3K, 1794-TB3SK, 1794-TBNK	120V AC	Nonisolated inputs
1794-IM8	8	—	1794-TBN, 1794-TBNK	240V AC	
1794-IM16	16				
1794-OA8	—	8	1794-TBNF, 1794-TB2, 1794-TB3, 1794-TB3S, 1794-TBN, 1794-TBKD, 1794-TB3K, 1794-TB3SK, 1794-TBNK	120V AC	Nonisolated outputs
1794-OA8I					Isolated outputs
1794-OA16		16	1794-TB3, 1794-TB2, 1794-TB3S, 1794-TB3K 1794-TB3SK, 1794-TBN[1], 1794-TBKD, 1794-TBNK	120V AC	Nonisolated outputs
1794-OM8		8	1794-TBNF, 1794-TBN, 1794-TBNK	240V AC	
1794-OM16		16			
DC Modules					
1794-IB8	8	—	1794-TB3, 1794-TB3S, 1794-TB3K, 1794-TB3SK	24V DC	Nonisolated inputs
1794-IB16	16	—			
1794-IB16D			1794-TB32, 1794-TB32S		Group isolated inputs Diagnostics
1794-IB16XT			1794-TB3, 1794-TB3S, 1794-TB3K, 1794-TB3SK		Nonisolated inputs Extended temperatures
1794-IB10XOB6	10	6	1794-TB2, 1794-TB3, 1794-TB3S, 1794-TB3K, 1794-TB3SK		Nonisolated I/O
1794-IB10XOB6XT					Nonisolated I/O Extended temperatures
1794-IB16XOB16P	16	16	1794-TB32, 1794-TB32S		Nonisolated I/O Protected outputs
1794-IC16		—	1794-TB3, 1794-TB3S, 1794-TB3K, 1794-TB3SK	48V DC	Nonisolated inputs
1794-IG16				5V DC	
1794-IH16				125V DC	
1794-IV16				24V DC	
1794-IB32, 1794-IB32K	32		1794-TB32, 1794-TB32S		
1794-IV32					Nonisolated inputs with groups
1794-OB8	—	8	1794-TB2, 1794-TB3, 1794-TB3S, 1794-TB3K, 1794-TB3SK	24V DC	Nonisolated outputs
1794-OB8EP			1794-TB2, 1794-TB3, 1794-TB3S, 1794-TBN, 1794-TB3K, 1794-TB3SK, 1794-TBNK		Nonisolated, protected outputs
1794-OB8EPXT					Nonisolated, protected outputs Extended temperatures

Table 7 - Digital I/O Module Summary (Continued)

Catalog Number	Inputs	Outputs	Terminal Base Unit	Electrical Range	Module Type
1794-OB16	–	16	1794-TB2, 1794-TB3, 1794-TB3S, 1794-TB3K, 1794-TB3SK	24V DC	Nonisolated outputs
1794-OB16D					Nonisolated outputs Diagnostics
1794-OB16P			1794-TB2, 1794-TB3, 1794-TB3S, 1794-TBN, 1794-TB3K, 1794-TB3SK, 1794-TBNK		Nonisolated, protected outputs Conformal coated
1794-OB16PXT					Nonisolated, protected outputs Extended temperatures
1794-OB32P		32	1794-TB32, 1794-TB32S	24V DC	Nonisolated, protected outputs with groups
1794-OC16	–	16	1794-TB3, 1794-TB3S, 1794-TB3K, 1794-TB3SK	48V DC	Nonisolated outputs
1794-OG16				5V DC	
1794-OV16				24V DC	
1794-OV16P					Nonisolated, protected outputs
1794-OV32		32	1794-TB32, 1794-TB32S		Nonisolated outputs in groups
Relay Modules					
1794-OW8	–	8	1794-TB2, 1794-TB3, 1794-TB3S, 1794-TBN, 1794-TBNF, 1794-TB3SK, 1794-TBNK	24V DC	Isolated outputs Electromagnetic relays
1794-OW8XT					Isolated outputs Electromagnetic relays Extended temperatures

(1) Auxiliary terminal strips are required when using the 1794-TBN.

Select Input Filter Times for Digital Modules

Input filter times can be set to the following values (EtherNet/IP, ControlNet, and DeviceNet only).

Table 8 - Input Filter Times – AC Modules

Filter Times for Inputs	Maximum Times (ms)			
	Off to On		On to Off	
	1794-IA8, 1794-IA8I	1794-IA16, 1794-IM8	1794-IA8, 1794-IA8I	1794-IA16, 1794-IM8
Filter time 0 (default)	8.4[1]	7.5	26.4[2]	26.5
1	8.6	8	26.6	27
2	9	9	27	28
3	10	10	28	29
4	12	12	30	31
5	16	16	34	35
6	24	24.5	42	44
7	40	42	58	60.5

(1) Off to On filter is 8 ms.
(2) On to Off filter is 26 ms.

Table 9 - Input Filter Times – DC Modules

Filter Times for Inputs	Maximum Times (ms)
	Off to On and On to Off
	1794-IB8, 1794-IB16, 1794-IB32, 1794-IV16, 1794-IC16, 1794-IB10XOB6, 1794-IB16XOB16P
Filter time 0 (default)	0.25
1	0.5
2	1
3	2
4	4

Table 9 - Input Filter Times – DC Modules (Continued)

Filter Times for Inputs	Maximum Times (ms)
	Off to On and On to Off
	1794-IB8, 1794-IB16, 1794-IB32, 1794-IV16, 1794-IC16, 1794-IB10XOB6, 1794-IB16XOB16P
5	8
6	16
7	32

Figure 6 - Derating Curve

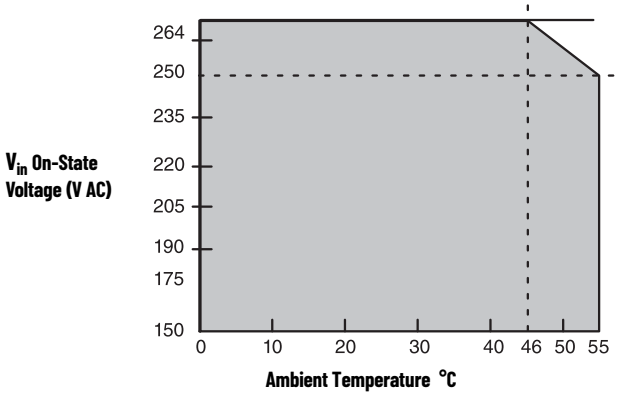

The area within the curve represents the safe operating range for the module under various conditions of user-supplied 220V AC supply voltages and ambient temperatures.

= All mounting positions (including normal horizontal, vertical, inverted horizontal) safe operating range.

Modules Specifications

The following section shows more detailed module specifications in comparative groups to facilitate your selection based on your requirements.

FLEX I/O Digital AC Input Modules

Table 10 - Digital AC Input Comparison

Specification	1794-IA8, 1794-IA8I	1794-IA16, 1794-IA16K	1794-IM8	1794-IM16
Voltage, on-state input, nom	120V AC[1]		240V AC	
Terminal base unit	1794-TBN, 1794-TB2, 1794-TB3, 1794-TB3S, 1794-TBKD, 1794-TB3K, 1794-TB3SK, 1794-TBNK	1794-TB3, 1794-TB3S, 1794-TBN[2], 1794-TB3K, 1794-TB3SK, 1794-TBNK	1794-TBN, 1794-TBNK	
Current, on-state input, nom	12 mA @ 120V AC, 60 Hz		10 mA @ 240V AC, 60 Hz	11 mA @ 240V AC, 60 Hz
Input impedance, nom	10.6 kΩ	10 kΩ	22.3 kΩ	22.2 kΩ
Voltage, on-state input, min	65V AC	74V AC	159V AC	
Voltage, off-state input, max	43V AC	20V AC	40V AC	
Current, on-state input, min	7.1 mA	5.5 mA @ 74V AC, 47 Hz	5.3 mA @ 159V AC, 47 Hz	
Current, off-state input, max	2.9 mA		2.6 mA	
Power dissipation, max	4.5 W @ 132V AC	6.4 W @ 132V AC	4.7 W @ 264V AC	6 W @ 264V AC
Thermal dissipation, max	15.3 BTU/hr @ 132V AC	21.8 BTU/hr @ 132V AC	16.2 BTU/hr @ 264V AC	20.47 BTU/hr @ 264V AC
Dimensions (HxWxD)	46 x 94 x 53 mm (1.8 x 3.7 x 2.1 in.) 94 x 94 x 69 mm (3.7 x 3.7 x 2.7 in.) installed			

Table 10 - Digital AC Input Comparison (Continued)

Specification	1794-IA8, 1794-IA8I	1794-IA16, 1794-IA16K	1794-IM8	1794-IM16
Isolation voltage	120V (continuous), Basic Insulation Type Type tested at 1250V AC (1240V for 1794-IA8I) for 60 s, between field side and system No isolation between individual channels Routine tested to 2150V DC for 1 s, between field side and system No isolation between individual channels	120V (continuous), Basic Insulation Type Type tested at 1264V AC for 60 s, between field side and system No isolation between individual channels Routine tested at 2150V DC for 1 s, between field side and system No isolation between individual channels	250V (continuous), Basic Insulation Type, field side to backplane No isolation between individual channels Type tested at 1250V AC for 60 s	
Temperature, operating	-20...+55 °C (-4...+131 °F)	0...55 °C (32...131 °F)		

(1) 1794-IA8I – Isolated voltage.
(2) Auxiliary terminal strips are required when using the 1794-TBN.

Figure 7 - 1794-IM8 Derating Curve

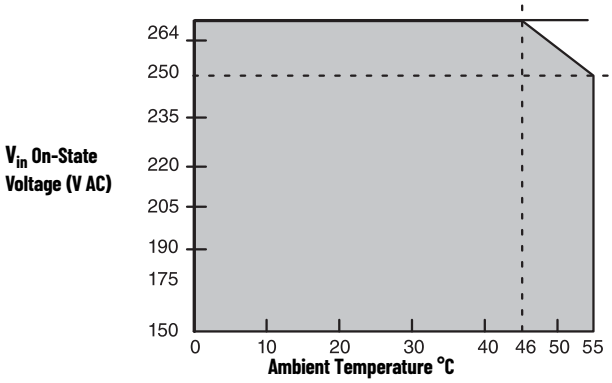

The area within the curve represents the safe operating range for the module under various conditions of user-supplied 220V AC supply voltages and ambient temperatures.

= All mounting positions (including normal horizontal, vertical, inverted horizontal) safe operating range.

FLEX I/O Digital AC Output Modules

Table 11 - Digital AC Output Comparison

Specification	1794-OA8, 1794-OA8I	1794-OA16, 1794-OA16K	1794-OM8	1794-OM16
Voltage, on-state output, nom	120V AC(1)		220V AC	240V AC
Terminal base unit	1794-TBN, 1794-TBNF, 1794-TB2, 1794-TB3, 1794-TB3S, 1794-TBKD, 1794-TBNK, 1794-TB3K, 1794-TB3SK	1794-TBN(2), 1794-TBNF, 1794-TB2, 1794-TB3S, 1794-TBKD, 1794-TBNK, 1794-TB3K, 1794-TB3SK	1794-TBN, 1794-TBNF, 1794-TBNK	
Current, on-state output, min	5 mA per output			
Current, on-state output, max	500 mA pre output @ 55 °C (131 °F)(3) 750 mA per output @ 35 °C (95 °F) 1.0 A on 4 nonadjacent outputs and 500 mA on the remaining 4 outputs @ 30 °C (86 °F)	500 mA per output @ 55 °C (131 °F)(4)	500 mA @ 55 °C (131 °F)(5)	
Current, on-state output, per module	4.0 A (8 outputs @ 500 mA)	4.0 A (16 outputs @ 250 mA)	4.0 A (8 outputs @ 500 mA)(5)	4.0 A (16 outputs @ 250 mA)
Leakage current, off-state output, max	2.25 mA		2.5 mA	
Voltage drop, on-state output, max	1.0V @ 0.5 A	1.5V @ 0.5 A		
Output surge current, max	7 A for 45 ms, repeatable every 8 s	7 A for 40 ms, repeatable every 8 s		
Voltage, on-state output, min(6)	85V AC		159V AC	
Voltage, on-state output, nom	120V AC		240V AC	
Voltage, on-state output, max	132V AC		264V AC	
Power dissipation, max	4.1 W @ 0.5 A 6.3 W @ 0.75 A 6.3 W @ 1.0 A	4.7 W @ 0.5 A	5 W @ 0.5 A	6 W @ 264V AC

Table 11 - Digital AC Output Comparison (Continued)

Specification	1794-OA8, 1794-OA8I	1794-OA16, 1794-OA16K	1794-OM8	1794-OM16
Thermal dissipation, max	14.0 BTU/hr @ 0.5 A 21.1 BTU/hr @ 0.75 A 21.4 BTU/hr @ 1.0 A	16.1 BTU/hr @ 0.5 A	17.1 BTU/hr @ 0.5 A	20.47 BTU/hr @ 264V AC
Dimensions (HxWxD), approx	46 x 94 x 53 mm (1.8 x 3.7 x 2.1 in.) 94 x 94 x 69 mm (3.7 x 3.7 x 2.7 in.) installed			
Isolation voltage	120V (continuous), I/O to system (and channel to channel for 1794-OA8I) No isolation between individual channels Tested to 2150V DC for 1 s and 1250V AC for 60 s		Tested at 2600V DC for 1 s, I/O to system No isolation between individual channels	250V (continuous), Basic Insulation Type, field side to backplane No isolation between individual channels Type tested at 1250V AC for 60 s
Temperature, operating	-20...+55 °C (-4...+131 °F)	0...55 °C (32...131 °F)		

(1) 1794-OA8I – Isolated voltage
(2) Auxiliary terminal strips are required when using the 1794-TBN for the 1794-OA16.
(3) Sufficient to operate an Allen-Bradley 500 NEMA size 3 motor starter
(4) If using 0.5 A outputs, alternate wiring so that no two 0.5 A outputs are adjacent. See Figure 8 for mounting other than the normal horizontal.
(5) See Figure 9.
(6) The external AC supply voltage must be capable of a 50 A surge for 1/2 cycle at power-up.

IMPORTANT
- The output signal delay, Off to On or On to Off is 1/2 cycle maximum.
- Modules have a yellow status indicator for each channel. These indicators are driven from the logic-side circuitry.
- Module outputs are not fused. Fusing of individual outputs is required. If applicable, the 1794-TBNF is recommended, otherwise you must provide external fusing. The following fuses are recommended:
  - 1794-OA8, 1794-OA8I – Use 1.6 A, 250V Slow-Blow, Littelfuse (part number 23901.6); SAN-O SD6-1.6 A (Allen-Bradley part number 94171304). The 1794-TBNF comes with SD6-1.6 A fuses installed.
  - 1794-OA16 and 1794-OA16K – Use 2.5 A, 150V MQ2 normal fuse.
  - 1794-OM8 – Use 0.8 A, 250V MQ4 normal fuse.

Figure 8 - 1794-OA16, 1794-OA16K Derating Curve

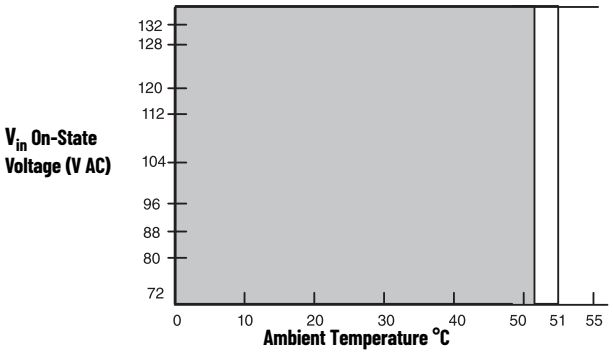

The area within the curve represents the safe operating range for the module under various conditions of user-supplied 220V AC supply voltages and ambient temperatures.

= Normal mounting safe operating range included
= Other mounting positions (including inverted horizontal, vertical) safe operating range

Figure 9 - 1794-OM8 Derating Curve

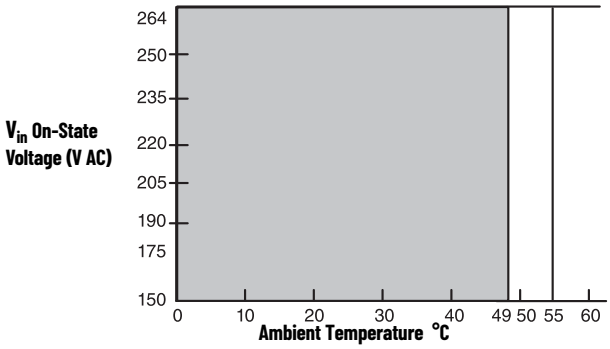

The area within the curve represents the safe operating range for the module under various conditions of user-supplied 220V AC supply voltages and ambient temperatures.

= Normal mounting safe operating range = included
= Other mounting positions (including inverted horizontal, vertical) safe operating range

FLEX I/O Digital DC Input Modules

Table 12 - Digital DC Input Comparison

Specification	1794-IB8, 1794-IB16, 1794-IB16XT	1794-IV16	1794-IB32, 1794-IB32K	1794-IV32	1794-IC16	1794-IG16	1794-IH16
Voltage, on-state input, min	10V DC, sinking	10V DC, sourcing	19.2V DC, sinking	19.2V DC, sourcing	30V DC, sinking	-0.2V DC, TTL	90V DC, sinking
Voltage, on-state input, nom	24V DC				48V DC	0V DC	125V DC
Voltage, on-state input, max	31.2V DC				60V DC	0.8V DC	146V DC
Voltage, off-state input, max	5V DC				10V DC	2.0...5.5V DC	20V DC
Terminal base unit	1794-TB3, 1794-TB3S, 1794-TB3K, 1794-TB3SK	1794-TB3, 1794-TB3S, 1794-TB3K, 1794-TB3SK	1794-TB32, 1794-TB32S		1794-TB3, 1794-TB3S, 1794-TB3K, 1794-TB3SK		
Current, on-state input, min	2.0 mA					—	1.0 mA
Current, on-state input, nom	8 mA @ 24V DC		4.1 mA @ 24V DC	4.1 mA	5 mA @ 48V DC	—	2 mA @ 125V DC
Current, on-state input, max	**1794-IB16:** 12 mA **1794-IB8, 1794-IV16:** 11 mA **1794-IB16XT:** 5.0 mA		6 mA	6 mA	11 mA	—	3 mA
Current, off-state input, max	1.5 mA					4.1 mA	0.8 mA
Input impedance, max	4.6 kΩ	4.7 kΩ	6 kΩ		11 kΩ	—	60 kΩ
Power dissipation, max	**1794-IB8:** 3.5 W @ 31.2V DC **1794-IB16:** 6.1 W @ 31.2 W @ 31.2V DC	5.7 W @ 31.2V DC	6.0 W @ 31.2V DC		6.4 W @ 60V DC	1.4 W @ 5.5V DC	6 W @ 146V DC
Thermal dissipation, max	**1794-IB8:** 11.9 BTU/hr @ 31.2V DC **1794-IB16:** 20.8 BTU/hr @ 31.2V DC **1794-IB16XT:** 6.8 BTU/hr @ 31.2V DC	19.4 BTU/hr @ 31.2V DC	20.5 BTU/hr @ 31.2V DC		21.9 BTU/hr @ 60V DC	4.78 BTU/hr @ 5.5V DC	20.47 BTU/hr @ 146V DC
Dimensions (HxWxD), approx	46 x 94 x 53 mm (1.8 x 3.7 x 2.1 in.) 94 x 94 x 69 mm (3.7 x 3.7 x 2.7 in.) installed						
Isolation voltage	50V (continuous), Basic Insulation Type, between field side and system No isolation between individual channels **1794-IB8, 1794-IB16XT:** Type tested at 850V DC for 60 s **1794-IV16:** Type tested at 700V DC for 60 s **1794-IB32, 1794-IB32K:** Routine tested at 2121V DC for 2 s **1794-IV32:** Type tested at 707V DC for 60 s **1794-IB16:** Type tested at 707V DC for 60 s				Tested at 1900V DC for 1 s, I/O to system No isolation between individual channels	50V (continuous), Basic Insulation Type, between field side and system No isolation between individual channels Type tested at 707V DC for 60 s	250V (continuous), Basic Insulation Type, between field side and system Type tested at 1706V DC for 60 s, between field side and system No isolation between individual channels

Table 12 - Digital DC Input Comparison (Continued)

Specification	1794-IB8, 1794-IB16, 1794-IB16XT	1794-IV16	1794-IB32, 1794-IB32K	1794-IV32	1794-IC16	1794-IG16	1794-IH16
Temperature, operating	**1794-IB8, 1794-IB16:** -20...+55 °C (-4...+131 °F) **1794-IB16XT:** -20...+70 °C (-4...+158 °F)	-20...+55 °C (-4...+131 °F)	0...55 °C (32...131 °F)				

IMPORTANT
- Do not put the 1794-IB8 module next to an output module in 8-point compact addressing with the 1794-ASB2/C or 1794-ASB/D.
- Modules have a yellow status indicator for each channel. These indicators are driven from the customer field-side input device.

Figure 10 - 1794-IB16 Derating Curve

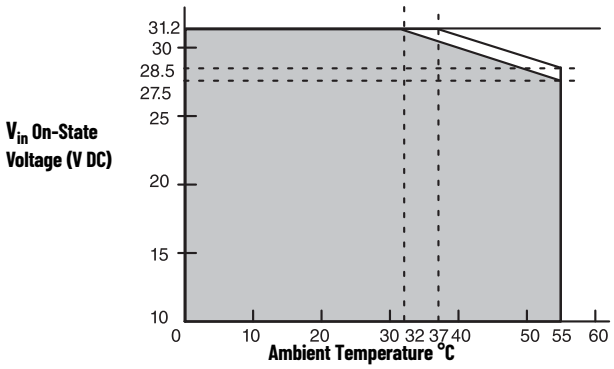

The area within the curve represents the safe operating range for the module under various conditions of user-supplied 24V DC supply voltages and ambient temperatures.

= Normal mounting safe operating range = included
= Other mounting positions (including inverted horizontal, vertical) safe operating range

Figure 11 - 1794-IB32 Derating Curve

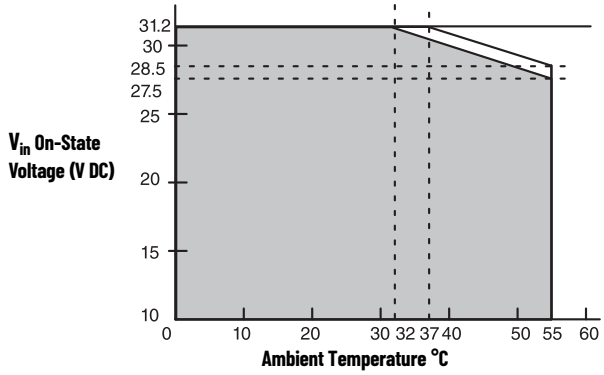

The area within the curve represents the safe operating range for the module under various conditions of user-supplied 24V DC supply voltages and ambient temperatures.

= Normal mounting safe operating range = included
= Other mounting positions (including inverted horizontal, vertical) safe operating range

Figure 12 - 1794-IC16 Derating Curve

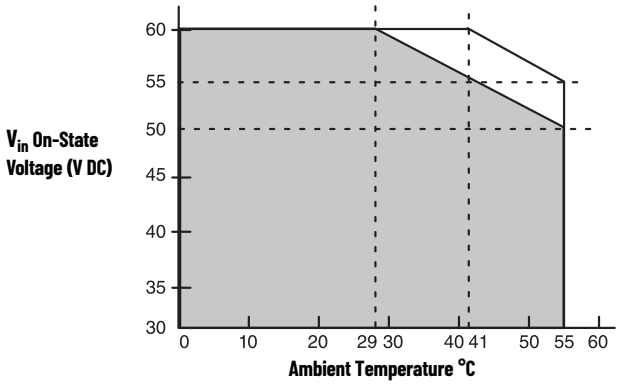

The area within the curve represents the safe operating range for the module under various conditions of user-supplied 48V DC supply voltages and ambient temperature.

= Normal mounting safe operating range included
= Other mounting positions (including inverted horizontal) safe operating range

FLEX I/O Digital DC Output Modules

- 1794-OB8 and 1794-OB16 provide 16 sourcing 1/2 Amp outputs (8 for the 1794-OB8) over a wide 10...31.2V DC input voltage range.
- 1794-OV16 is the sinking version of the 1794-OB16 module.
- 1794-OV32 is the 32 output version of the 1794-OV16 module.
- 1794-OC16 is the 48V DC version of the 1794-OB16 module.
- These modules are not fused. External fusing is strongly recommended or use protected output modules. Module outputs are not fused. Fusing of outputs is recommended. If fusing is desired, you must provide external fusing.
  - For 1794-OB8, 1794-OB16, and 1794-OV16 use SAN-O MQ4-800 mA fuse.
  - For 1794-OC16 use 2 A, 150V AC MQ2 normal fuse.

Table 13 - Digital DC Output Comparison

Specification	1794-OB8	1794-OB16	1794-OV16	1794-OV32	1794-OG16	1794-OC16
Voltage, on-state output, nom	24V DC, sourcing		24V DC, sinking		0V DC	48V DC, sourcing
Voltage, on-state output, min	10V DC				0V DC	30V DC
Voltage, on-state input, max	31.2V DC				0.4V DC	60V DC @ 45 °C (113 °F) 55V DC @ 55 °C (131 °F)
Voltage drop, on-state output, max	0.5V DC		0.2V DC		—	1.0V DC @ 0.5 A
Terminal base unit	1794-TB2, 1794-TB3, 1794-TB3S, 1794-TB3K, 1794-TB3SK		1794-TB3, 1794-TB3S, 1794-TB3K, 1794-TB3SK			1794-TB2, 1794-TB3, 1794-TB3S, 1794-TB3K, 1794-TB3SK
Current, on-state output, min	1.0 mA per channel				0.15 mA per channel	2.0 mA per channel
Current, off-state output, max	500 mA per channel 4 A per module	500 mA per channel 8 A per module		500 mA	24.0 mA per channel	500 mA per channel 8 A per module
Leakage current, off-state output, max	0.5 mA				1 mA	1.0 mA
Output surge current, max	2 A for 50 ms, repeatable every 2 s				—	4 A for 10 ms, repeatable every 2 s
Output delay time, Off to On, max	0.5 ms				0.25 ms	0.5 ms(1)
Output delay time, On to Off, max	1.0 ms				0.5 ms	1.0 ms @ 25 °C (77 °F) 2.0 ms @ 55 °C (131 °F)(2)
External DC supply voltage range	10...31.2V DC (5% ripple)				4.5...5.5V DC (includes 50 mV p-p ripple)	30...60V DC (5% ripple)
External DC supply current range	10...35 mA	20...65 mA		50 mA	100 mA @ 5V DC	13...27 mA
Power dissipation, max	3.3 W @ 31.2V DC	5.3 W @ 31.2V DC	4.2 W @ 31.2V DC	4.4 W @ 31.2V DC	0.8 W @ 5.5V DC	3.7 W @ 60V DC

Table 13 - Digital DC Output Comparison (Continued)

Specification	1794-OB8	1794-OB16	1794-OV16	1794-OV32	1794-OG16	1794-OC16
Thermal dissipation, max	11.2 BTU/hr @31.2V DC	18.1 BTU/hr @31.2V DC	14.3 BTU/hr @ 31.2V DC	8.53 BTU/hr @ 31.2V DC	3.41 BTU/hr @ 5.5V DC	12.6 BTU/hr @ 60V DC
Dimensions (HxWxD), approx	46 x 94 x 53 mm (1.8 x 3.7 x 2.1 in.) 94 x 94 x 69 mm (3.7 x 3.7 x 2.7 in.) installed					
Isolation voltage	50V continuous, I/O to system Tested to 850V DC for 1 s, I/O to system No isolation between individual channels		50V continuous Tested 1770V DC for 60 s, I/O to system No isolation between individual channels	50V (continuous), Basic Insulation Type, between field side and system Type tested at 707V DC for 60 s, between field side and system No isolation between individual channels		75V continuous, I/O to system Tested to 1900V DC for 1 s, I/O to system (No isolation between individual channels)
Temperature, operating	-20...+55 °C (-4...+131 °F)		-20...+55 °C (-4...+131 °F)	0...55 °C (32...131 °F)		

(1) Off to On delay is the time from a valid output On signal to output energization. On to Off delay is the time from a valid output Off signal to output de-energization.

FLEX I/O Digital DC Protected Output Modules

- 1794-OB16P provides 16 sourcing 1/2 Amp outputs self-protected against shorts, overloads, and over temperature. The faulted output automatically returns when the fault is removed. No feedback to the processor is provided.
- 1794-OB16PXT is the extended temperature version of the 1794-OB16P module. The module is conformally coated.
- 1794-OB8EP provides 8 sourcing 2 Amp outputs with an electronic fuse type of overload protection, which opens when overloaded. The fuse can be 'reset' several ways. Fault status is provided to the processor.
- 1794-OB8EPXT is the extended temperature version of the 1794-OB8EP module. The module is conformally coated.
- 1794-OB32P provides 32 self-protected sourcing 1/2 Amp outputs in 2 groups of 16 outputs. Separate voltage sources can be used with each group.
- 1794-OV16P is the sinking version of the 1794-OB16P module.

Table 14 - Digital DC Protected Output Comparison

Specification	1794-OB16P, 1794-OB16PXT	1794-OB8EP, 1794-OB8EPXT	1794-OB32P	1794-OV16P
Voltage, on-state output, nom	24V DC, sourcing			24V DC, sinking
Voltage, on-state output, min	10V DC	19V.2 DC	10V DC	
Voltage, on-state output, max	31.2V DC(1)	31.2V DC		
Voltage drop, on-state output, max	0.5V DC	0.2V DC	0.5V DC	0.2V DC
Terminal base unit	1794-TB2, 1794-TB3, 1794-TB3S, 1794-TB3K, 1794-TB3SK	1794-TB2, 1794-TB3, 1794-TB3S, 1794-TBN, 1794-TB3K, 1794-TB3SK, 1794-TBNK	1794-TB32, 1794-TB32S	1794-TB3, 1794-TB3S, 1794-TB3K, 1794-TB3SK
Current on-state output, min	1.0 mA per channel			
Current, on-state output, max	500 mA per channel, 8 A per module	2.0 A per channel, 10 A per module	500 mA per channel, 14 A per module(2)	500 mA per channel, 8 A per module
Leakage current, off-state output, max	0.5 mA			
Output surge current, max	1.5 A for 50 ms, repeatable every 2 s	4 A for 50 ms, repeatable every 3 s	2 A for 50 ms, repeatable every 2 s	
Output delay time, Off to On, max	0.5 ms	0.1 ms	0.5 ms	
Output delay time, On to Off, max	1.0 ms	0.1 ms	1.0 ms	
External DC supply voltage range	10...31.2V DC (5% AC ripple)	19.2...31.2V DC (5% AC ripple)	10...31.2V DC (5% AC ripple)	
External DC supply current range	25...75 mA	20...35 mA	103...273 mA	20...65 mA
Power dissipation, max	5.0 W @ 31.2V DC	5.5 W @ 31.2V DC	5.3 W @ 31.2V DC	4.2 W @ 31.2V DC
Thermal dissipation, max	17.0 BTU/hr @ 31.2V DC	18.8 BTU/hr @ 31.2V DC	18.1 BTU/hr @ 31.2V DC	14.3 BTU/hr @ 31.2V DC

Table 14 - Digital DC Protected Output Comparison (Continued)

Specification	1794-OB16P, 1794-OB16PXT	1794-OB8EP, 1794-OB8EPXT	1794-OB32P	1794-OV16P
Dimensions (HxWxD), approx	46 x 94 x 53 mm (1.8 x 3.7 x 2.1 in.) 94 x 94 x 69 mm (3.7 x 3.7 x 2.7 in.) installed			
Isolation voltage	50V (continuous), Basic Insulation Type Type tested at 2121V DC for 60 s, between field side and system No isolation between individual channels	50V (continuous), Basic Insulation Type **1794-OB8EP, 1794-OB32P:** Type tested at 850V DC for 60 s, between field side and system **1794-OB8EPXT:** Type tested at 1500V AC for 60 s, between field side and system No isolation between individual channels		50V (continuous), Basic Insulation Type Type tested at 1770V DC for 60 s, between field side and system No isolation between individual channels
Temperature, operating	**1794-OB16P:** -20...+55 °C (-4...+131 °F) **1794-OB16PXT:** -20...+70 °C (-4...+158 °F)	**1794-OB8EP:** -20...+55 °C (-4...+131 °F) **1794-OB8EPXT:** -20...+70 °C (-4...+158 °F)	0...55 °C (32...131 °F)	-20...+55 °C (-4...+131 °F)

(1) See Figure 13.
(2) 6.0 A total for channels 0...15; 8.0 A total for channels 16...31.

Figure 13 - 1794-OB16P Derating Curve

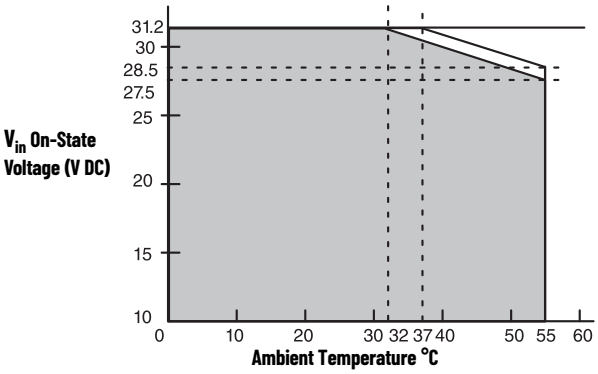

The area within the curve represents the safe operating range for the module under various conditions of user-supplied 24V DC supply voltages and ambient temperatures.

= Normal mounting safe operating range = included
= Other mounting positions (including inverted horizontal, vertical) safe operating range

Figure 14 - 1794-OB8EP Output Minimum Surge

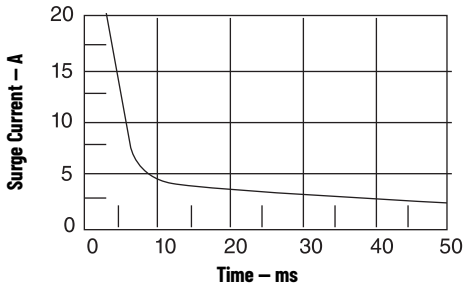

FLEX I/O Digital DC Diagnostic Modules

1794-IB16D is the diagnostic version of the 1794-IB16 module.

1794-IB16DK is the conformal coated version of the 1794-IB16D module.

1794-OB16D is the diagnostic version of the 1794-OB16 module.

The modules can detect open wire, short circuits, and reverse polarity of external power. When the module detects a fault, the module fault LED status indicator lights up, the corresponding red channel LED status indicator lights up, and the corresponding module error bit (open wire, short circuit, or reverse power bit) is set. The reporting function provides results of the diagnostics as bits in its data table.

The modules have 16-bicolor channel LED status indicators and one red module status indicator. These indicators are driven from the customer field side power.

Table 15 - Digital DC Diagnostic Input Module

Specification	1794-IB16D and 1794-IB16DK
Voltage, on-state input, min	10V DC, sinking
Voltage, on-state input, nom	24V DC
Voltage, on-state input, max	31.2 DC(1)
Voltage, off-state input, max	5.0V DC
Current, on-state input, nom	8.2 mA @ 24V DC
Current, on-state input, max	12.1 mA @ 31.2V DC
Terminal base unit	1794-TB32, 1794-TB32S
Input impedance, max	3.1 kΩ
Current, on-state input, min	2.0 mA @ 10V DC
Current, off-state input, max	1.5 mA
Power dissipation, max	8.5 W @ 31.2V DC
Thermal dissipation, max	29 BTU/hr @ 31.2V DC
Detected reverse polarity voltage	10V min(2)
Sensor voltage drop, max	2.2V DC
Current, sensor source, max	50 mA
Dimensions (HxWxD), approx	46 x 94 x 53 mm (1.8 x 3.7 x 2.1 in.) 94 x 94 x 69 mm (3.7 x 3.7 x 2.7 in.) installed
Isolation voltage	50V continuous, I/O to system Tested to 2121V DC for 1 s, I/O to system No isolation between individual channels
Temperature, operating	0...55 °C (32...131 °F)

(1) See Figure 15.
(2) The module must detect if the reverse polarity external power supply voltage is greater than the value.

Table 16 - Digital DC Diagnostic Output Module

Specification	1794-OB16D
Voltage, on-state output, min	10V DC, sinking
Voltage, on-state output, max	31.2 DC
Voltage drop, on-state output, max	0.5V DC @ 0.5 A
Terminal base unit	1794-TB3, 1794-TB3S, 1794-TB3K, 1794-TB3SK
Current, on-state output, min	2.0 mA per channel
Current, on-state output, max	500 mA per channel 8 A per module
Leakage current, off-state output, max	0.5 mA
Output surge current, max	2 A for 50 ms, repeatable every 2 s
External DC supply voltage range	10...31.2V DC (5% AC ripple)
External DC supply current range	56...78 mA
Power dissipation, max	4.8 W @ 31.2V DC
Thermal dissipation, max	16.4 BTU/hr @ 31.2V DC
Short circuit protection	Thermal shutdown (auto reset)(1)
Open wire detection, off-state leakage current	0.1 mA(2)
Detect reverse polarity voltage, min	10V(3)
Current, sensor source, max	Yes
Dimensions (HxWxD), approx	46 x 94 x 53 mm (1.8 x 3.7 x 2.1 in.) 94 x 94 x 69 mm (3.7 x 3.7 x 2.7 in.) installed
Isolation voltage	50V continuous, I/O to system Tested to 2121V DC for 1 s, I/O to system No isolation between individual channels
Temperature, operating	0...55 °C (32...131 °F)

(1) Short circuit protection detection condition: when external power active, output signal active, and output port voltage less than 2V.
(2) When external power is active and output signal is inactive
(3) The module must detect if the reverse polarity external power supply voltage is greater than the value.

Figure 15 - 1794-IB16D Derating Curves

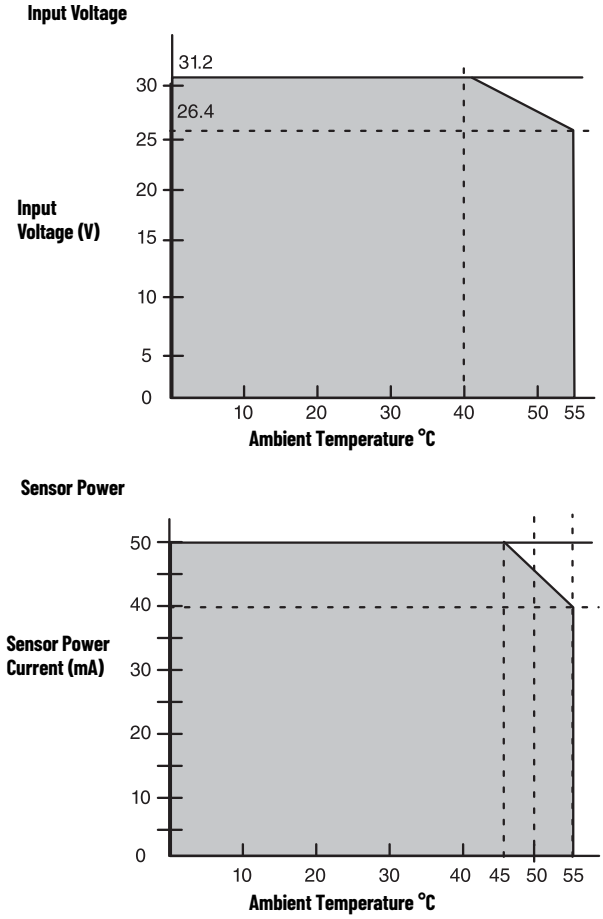

FLEX I/O Digital DC Combination Modules

The 1794-IB16XOB16P module has outputs that are self-protected against shorts, overload, and over temperature similar to the 1794-OB16P module.

The 1794-IB10XOB6 module requires the use of external fusing for individual outputs.

The 1794-IB10XOB6XT module is the extended temperature version of the 1794-IB10XOB6 module.

Table 17 - Digital DC Combination Modules

Specification	1794-IB10XOB6, 1794-IB10XOB6XT(1)	1794-IB16XOB16P(2)
Terminal base unit	1794-TB2, 1794-TB3, 1794-TB3S, 1794-TB3K, 1794-TB3SK	1794-TB32, 1794-TB32S
Isolation voltage	50V (continuous), Basic Insulation Type Type tested at 1250V AC for 60 s, between field side and system Routine tested at 2121V DC for 1 s, between field side and system No isolation between individual channels	50V (continuous), Basic Insulation Type Tested at 2121V DC for 1 s, system to I/O and inputs to outputs
Power dissipation, max	6.0 W @ 31.2V DC	7.0 W @ 31.2V DC
Thermal dissipation, max	20.3 BTU/hr @ 31.2V DC	23.9 BTU/hr @ 31.2V DC
Number of inputs	10	16
Voltage, on-state input, min	10V DC	
Voltage, on-state input, nom	24V DC	
Voltage, on-state input, max	31.2V DC	
Current, on-state input, min	2.0 mA	
Current, on-state input, nom	8.0 mA @ 24V DC	
Current, on-state input, max	11.0 mA	12.1 mA
Voltage, off-state input, max	5V DC	
Current, off-state input, max	1.5 mA	

Table 17 - Digital DC Combination Modules (Continued)

Specification	1794-IB10XOB6, 1794-IB10XOB6XT(1)	1794-IB16XOB16P(2)
Input impedance, max	4.8 kΩ	2.5 kΩ
Number of outputs	6	16
Voltage, on-state output, min	10V DC	
Voltage, on-state output, nom	24V DC	
Voltage, on-state output, max	31.2V DC	
Voltage drop, on-state output, max	1V DC @ 2 A 0.5V DC @ 1 A	0.5V DC @ 0.5 A
Current, on-state output, min	1.0 mA per channel	
Current, on-state output, max	2.0 A per channel 10 A per module	0.5 A per channel 8 A per module
Voltage, off-state output, max	31.2V DC	
Leakage current, off-state output, max	0.5 mA	
Output delay time, Off to On, max(3)	0.5 ms	
Output delay time, On to Off, max	1.0 ms	
Output surge current, max	4 A for 50 ms repeatable every 2 s	1.5 A for 50 ms repeatable every 2 s
Voltage, off-state input, max	5.0V DC	
Current, on-state input, min	7.1 mA	5.5 mA @ 74V AC, 47 Hz
Current, off-state input, min	1.5 mA	
Dimensions (HxWxD), approx	46 x 94 x 53 mm (1.8 x 3.7 x 2.1 in.) 94 x 94 x 69 mm (3.7 x 3.7 x 2.7 in.) installed	
External DC supply voltage range	10...31.2V DC (includes 5% AC ripple)	
External DC supply current range	8 mA @ 10V DC 15 mA @ 19.2V DC 19 mA @ 24V DC 25 mA @ 31.2V DC	78 mA @ 10V DC
Temperature, operating	**1794-IB10XOB6:** -20...+55 °C (-4...+131 °F) **1794-IB10XOB6XT:** -20...+70 °C (-4...+158 °F)	0...55 °C (32...131 °F)

(1) Module outputs are not fused. Fusing is recommended. If fusing is desired, you must supply external fusing. Use SAN-O MQ4-3A or Littelfuse 235-003.
(2) Outputs are electronically protected against overloads and shorts.
(3) Output Off to On or On to Off delay is the time from the module issuing an output on or off until the output actually turns on or off

FLEX I/O Digital Contact Output Modules (Relay)

The 1794-OW8 module provides 8 isolated Form A (normally open) contacts capable of switching up to 2 A at up to 230V AC and 125V DC.

Do not attempt to increase load current or wattage capability beyond the maximum rating by connecting two or more outputs in parallel. The slightest variation in relay switching time may cause one relay to switch momentarily the total load current. Apply only +24V DC power to the power terminals on the terminal base. Verify that all relay wiring is properly connected before applying any power to the module.

The total current draw through the terminal base unit is limited to 10 A. Separate power connections to the terminal base unit may be necessary.

The use of external fuses or a fused terminal base is required for individual outputs.

The 1794-OW8XT module is the extended temperature version of the 1794-OW8 module. The module is conformally coated.

Table 18 - Digital Contact Output Modules

Specification	1794-OW8	1794-OW8XT
Number of outputs	8	
Terminal base unit	1794-TB2, 1794-TB3, 1794-TB3S, 1794-TBN, 1794-TBNF, 1794-TB2K, 1794-TB3K, 1794-TB3SK	
External DC supply voltage range	19.2...31.2V DC (includes 5% AC ripple)	
External DC supply current, nom	125 mA	126 mA
Leakage current, off-state output, max	1.0 mA @ 240V AC (through snubber circuit)	

Table 18 - Digital Contact Output Modules (Continued)

Specification	1794-OW8	1794-OW8XT
Output delay time, Off to On, max	10 ms(1)	
Output delay time, On to Off, max	10 ms(2)	
Relay output current rating, resistive	2.0 A @ 5...30V DC 0.22 A @ 125V DC 2.0 A @ 125V AC 2.0 A @ 250V AC	
Relay output current rating, inductive	0.98 A steady state @ 5...30V DC, L/R = 7 ms 0.5 A steady state @ 48V DC, L/R = 7 ms 0.22 A steady state @ 125V DC, L/R = 7 ms 2.0 A steady state, 15 A make @ 120V AC, PF = cos Θ = 0.35 2.0 A steady state, 7.5 A make @ 240V AC, PF = cos Θ = 0.35	
Contact resistance, initial	30 mΩ	
Switching frequency, max	0.3 Hz (1 operation every 3 s)	
Bounce time, mean	1.2 ms	
Contact load, min	100 µA @ 100 mV DC	
Mechanical life	100,000 operations at rated loads	
Fusing	3.0 A. 250V AC slow-blow fuse (Littelfuse part number 239003).	
Power dissipation, max	5.5 W @ 31.2V DC	
Thermal dissipation, max	18.8 BTU/hr @ 31.2V DC	
Dimensions (HxWxD), approx	46 x 94 x 53 mm (1.8 x 3.7 x 2.1 in.) 94 x 94 x 69 mm (3.7 x 3.7 x 2.7 in.) installed	
Isolation voltage	250V (continuous), Basic Insulation Type, relay to relay, relay to backplane, and relay to power 50V (continuous), Basic Insulation Type, power to backplane Type tested at 1500V AC for 60 s, relay to relay, all combinations. Type tested at 3250V DC for 60 s, relay to backplane and relay to power Type tested at 720V DC for 60 s, power to backplane.	
Temperature, operating	-20...+55 °C (-4...+131 °F)	-20...+70 °C (-4...+158 °F)

(1) Time from valid output on signal to relay energization by module
(2) Time from valid output off signal to relay de-energization by module

FLEX I/O Analog, Thermocouple, and RTD Modules

Choose analog, thermocouple, or RTD I/O modules when you need:

- **Individually configurable channels** allow the module to be used with various sensors.
- **Online configuration**. Modules can be configured in RUN mode using programming software or the control program. This allows you to change configuration while the system is operating.
- **Selectable input filters** on many modules allow you to select from several different filter frequencies for each channel that best meets the performance needs of your application. Lower filter settings provide greater noise rejection and resolution. Higher filter settings provide faster performance. *Note: Isolated analog modules have four filter selections; the thermocouple module has ten; and the combined RTD/thermocouple module has eight.*
- **Ability to direct output device operation during an abnormal condition.**
  Each channel of the output module can be individually configured to hold its last value or assume a user-defined value on either a run-to-program or run-to-fault condition. This feature allows you to set the condition of your analog devices, and therefore your control process, which may help to achieve a reliable shutdown.
- **Selectable response to broken input sensor.** This feature provides feedback to the controller that a field device is not connected. This allows you to specify corrective action based on the channel condition.
- **Single-ended or differential inputs depending on the module.** Analog modules have single-ended inputs while isolated analog and temperature modules have differential inputs. Single-ended voltage sensors reduce costs. Differential inputs are more expensive, but are typically more noise-immune.
- **Overrange and underrange detection and indication** are available with most modules. This eliminates the need to test values in the control program. While standard analog modules have limited diagnostics, temperature and isolated analog modules provide overrange, underrange, and wire-off diagnostics with alarm bits.
- **Onboard scaling** is performed by the temperature modules and is configurable for either °C, °F, °K, Ohms, or mV. This minimizes the need to scale the data in the user program.
- **Accuracy and resolution vary by module** and the associated application. Specifications are given for each module at its operational conditions.
- **Internal calibration is performed** in the analog modules (1794-IE8, 1794-OE4, and 1794-IE4XOE2). User calibration is recommended (yearly) for isolated analog and temperature modules. All modules come Factory-calibrated.

Modules Specifications

The following section shows more detailed module specifications in comparative groups to facilitate your selection based on your requirements.

FLEX I/O Analog Input Modules

Table 19 - Analog Input Comparison

Catalog Number	Input Signal Range	Accuracy Drift with Temperature	External DC Supply Current, Nom	Power Dissipation, Max	Thermal Dissipation, Max
1794-IE8[1]	4...20 mA 0...20 mA ±10V 0...10V	Current Input: 0.0407% Full Scale/°C Voltage Input: 0.0428% Full Scale/°C	60 mA @ 24V DC	3 W @ 31.2V DC	10.2 BTU/hr @ 31.2V DC
1794-IE8XT					
1794-IE8H	4...20 mA 0...20 mA	0.05% Full Scale for 0...55 °C (32...131 °F)	190 mA @ 24V DC	3.9 W	13.5 BTU/hr
1794-IE12, 1794-IE12K	4...20 mA (user configurable) 0...20 mA (user configurable)	Current Input: 0.004% Full Scale/°C Voltage Input: 0.004% Full Scale/°C	30 mA @ 24V DC; 45 mA @ 10.0V DC	1.2 W @ 31.2V DC; 1.1 W @ 24V DC; 0.9 W @ 10.0V DC	4.1 BTU/hr @ 31.2V DC
1794-IF4I[1]	4...20 mA 0...20 mA ±20 mA ±10V 0...10V ±5V 0...5V	Current Input: 0.0038% Full Scale/°C Voltage Input: 0.0028% Full Scale/°C	80 mA @ 24V DC	2.0 W @ 31.2V DC	6.9 BTU/hr @ 31.2V DC
1794-IF4IXT					
1794-IF4ICFXT					6.8 BTU/hr @ 31.2V DC
1794-IF8IH	4...20 mA (user configurable) 0...20 mA (user configurable)	0.4% Full Scale for 0...55 °C (32...131 °F)	190 mA @ 24V DC	4.8 W @ 31.2V DC	6.8 BTU/hr @ 31.2V DC

Table 19 - Analog Input Comparison (Continued)

Catalog Number	Input Signal Range	Accuracy Drift with Temperature	External DC Supply Current, Nom	Power Dissipation, Max	Thermal Dissipation, Max
1794-IR8(1)(2)	1...433 Ω	–	140 mA @ 24V DC	3 W @ 31.2V DC	10.2 BTU/hr @ 31.2V DC
1794-IRT8(1)(2)	-40...+100 mV DC for thermocouples 0...325 mV DC for RTDs 0...500 Ω for resistance range	–	85 mA @ 24V DC		
1794-IRT8XT			95 mA @ 24V DC		
1794-IT8(1)(2)	±76.5 mV	–	150 mA @ 24V DC		
1794-IE8X0E4	4...20 mA (user configurable) 0...20 mA (user configurable)	Current Input or Output: 0.004% Full Scale @ 25 °C (77 °F) Voltage Input or Output: 0.004% Full Scale @ 25 °C (77 °F)	140 mA @ 24V DC; 280 mA @ 10.0V DC	3.0 W @ 31.2V DC; 2.3 W @ 24V DC; 2.0 W @ 10.0V DC	10.3 BTU/hr @ 31.2V DC
1794-IE4X0E2(1)	4...20 mA 0...20 mA ±10V 0...10V	Current Input: 0.0407% Full Scale/°C Voltage Input: 0.0428% Full Scale/°C Current Output: 0.0069% Full Scale/°C Voltage Output: 0.0045% Full Scale/°C	70 mA @ 24V DC	4.0 W @ 31.2V DC	13.6 BTU/hr @ 31.2V DC
1794-IE4X0E2XT			164 mA @ 10.5V DC		15.3 BTU/hr @ 31.2V DC
1794-IF2X0F2I(1)	4...20 mA 0...20 mA ±20 mA ±10V 0...10V ±5V 0...5V	Current Input: 0.0038% Full Scale/°C Voltage Input: 0.0028% Full Scale/°C Current Output: 0.0025% Full Scale/°C Voltage Output: 0.0012% Full Scale/°C	150 mA @ 24V DC	3.3 W @ 31.2V DC	11 BTU/hr @ 31.2V DC
1794-IF2X0F2IXT				2.0 W @ 31.2V DC	6.8 BTU/hr @ 31.2V DC

(1) Each module's channel is individually selectable or as a group of four.
(2) For the accuracy calculation, see the module's user manual.

1794-IE8 and 1794-IE8XT Analog 8 Input Module

The 1794-IE8 is a voltage/current measurement module that works with various input sensors to measure input voltage in the ±10V range or input current in the 0...20 mA range. Each channel is individually configurable for the desired input range. Use the 1794-IE8 with 2-wire, 3-wire, and 4-wire input sensor field devices.

The 1794-IE8XT module is the extended temperature version of the 1794-IE8 module. The module is conformally coated.

IMPORTANT Only connect either a voltage input or a current input per channel, not both.

ATTENTION: Use caution to help prevent ground loops when using a common ground, since the channels are not isolated.

Table 20 - Analog 8 Input Modules

Specification	1794-IE8 and 1794-IE8XT
Voltage, input, max overload	30V, single channel, continuous
Current, input, max overload	32 mA, single channel, continuous
Input impedance, nom	Current Input: 238 Ω Voltage Input: 100 kΩ
Input resolution	12 bits – unipolar 11 bits + sign – bipolar 5.13 µA/cnt 2.56 mV/cnt – unipolar 5.13 mV/cnt – bipolar
Data format	16-bit 2's complement, left justified
Input conversion type	Successive approximation
Input conversion rate	256 µs all channels

Table 20 - Analog 8 Input Modules (Continued)

Specification	1794-IE8 and 1794-IE8XT
Normal mode rejection ratio	Current input: -3 dB @ 9 Hz; -20 dB/decade -15.3 dB @ 50 Hz -16.8 dB @ 60 Hz Voltage input: -3 dB @ 17 Hz; -20 dB/decade -10 dB @ 50 Hz -11.4 dB @ 60 Hz
Calibration	None required
Step response to 63% of FS, input	Current input: 18.2 ms Voltage input: 9.4 ms
Dimensions (HxWxD), approx	46 x 94 x 53 mm (1.8 x 3.7 x 2.1 in.) 94 x 94 x 69 mm (3.7 x 3.7 x 2.7 in.) installed
Accuracy	Current input: 0.20% Full Scale @ 25 °C (77 °F) Voltage input: 0.20% Full Scale @ 25 °C (77 °F)(1)
Temperature, operating	**1794-IE8:** -20...+55 °C (-4...+131 °F) **1794-IE8XT:** -20...+70 °C (-4...+158 °F)

(1) Includes offset, gain, non-linearity, and repeatability error terms

1794-IE8H HART Enabled Analog 8 Input Module

The 1794-IE8H is a HART enabled analog input module that works with HART enabled input sensors with input current in the 0...20 mA range. Use the 1794-IE8H with 2-wire or 3-wire transmitters. This module provides wire-off detection on a per-channel basis. The HART analog module can only be used on ControlNet or EtherNet/IP networks with one HART field device per channel.

Table 21 - HART Enabled Analog 8 Input Module

Specification	1794-IE8H
Voltage, input, max overload	—
Current, input, max overload	—
Isolation voltage	50V (continuous), Basic Insulation Type No isolation between individual channels
Input resolution	16 bits
Input resistance	—
Data format	Configurable
Input conversion type	—
Input conversion rate	10 ms (50 Hz) 8.33 ms (60 Hz)
Normal mode rejection ratio	—
Step response to 99% of FS, input	80 ms
Calibration	—
Dimensions (HxWxD), approx	46 x 94 x 75 mm (1.8 x 3.7 x 2.9 in.) 94 x 94 x 91 mm (3.7 x 3.7 x 3.6 in.) installed
Resolution	16 bit
Accuracy	Current input: 0.1% Full Scale @ 20 °C (68 °F)
Temperature, operating	-20...+55 °C (-4...+131 °F)

1794-IE12 and 1794-IE12K Analog 12 Input Module

The 1794-IE12 is a voltage or current measurement module that measures input voltage in a ±10V range or current in the 0...20 mA range. Each channel is individually configurable and the out-of-range notification is by channel.

The 1794-IE12K is the conformal coated version of the 1794-IE12 module.

Table 22 - Analog 12 Input Module

Specification	1794-IE12, 1794-IE12K
Voltage, input, max overload	30 continuous, single channel
Current, input, max overload	32 mA continuous, single channel
Isolation voltage	50 (continuous), Basic Insulation Type Type tested at 850V DC for 60 s, between field side and system No isolation between individual channels
Input resolution	320 µV/cnt 0.641 µA/cnt
Input resistance	Current input: <100 Ω Voltage input: >1 MΩ
Data format	16 bits, 2's complement
Input conversion type	Successive approximation
Input conversion rate	8.0 ms all channels
Normal mode rejection ratio	Voltage/current terminal: -3 dB @ 0.05 Hz; -20 dB/decade -52 dB @ 50 Hz -54 dB @ 60 Hz Voltage/current terminal with Quick Step: -3 dB @ 1.5 Hz; -20 dB/decade -29 dB @ 50 Hz -31 dB @ 60 Hz
Step response to 63% of FS, input	Current or voltage input: 1.3 s (0.09 s with Quick Step)
Calibration	None required
Dimensions (HxWxD), approx	46 x 94 x 54 mm (1.8 x 3.7 x 2.1 in.) 94 x 94 x 69 mm (3.7 x 3.7 x 2.7 in.) installed
Weight, approx.	97 g (3.4 oz.)
Resolution	16 bit unipolar 15 bit + bipolar
Accuracy	Current input: 0.1% Full Scale @ 25 °C (77 °F) Voltage input: 0.1% Full Scale @ 25 °C (77 °F)(1)
Temperature, operating	-20...+60 °C (-4...+140 °F)

(1) Includes offset, gain, non-linearity, and repeatability error terms

1794-IF4I and 1794-IF4IXT Isolated Analog 4 Input Module

The 1794-IF4I and 1794-IF4IXT are input modules with channel-to-channel isolation that work with various input sensors to measure input voltage in the ±10V range or input current in the 0...20 mA range. Each channel is individually configurable for the desired input range. Use the 1794-IF4I or 1794-IF4IXT with 2-wire, 3-wire, and 4-wire input sensor field devices.

The 1794-IF4IXT is the extended temperature version of the 1794-IF4I module.

Settings to these parameters affect all inputs set to 150 Hz, 300 Hz, or 600 Hz. The parameters do not affect channels set at 1200 Hz.

IMPORTANT Only connect either a voltage input or a current input per channel, not both.

Table 23 - Isolated Analog Input Modules

Specification	1794-IF4I, 1794-IF4IXT
Voltage, input, max overload	30V, single channel, continuous
Current, input, max overload	32 mA, single channel, continuous
Input resolution	16 bits – unipolar 15 bits + sign – bipolar 0.320 µA/cnt – unipolar 0.640 µA/cnt – bipolar 0.156 mV/cnt – unipolar 0.313 mV/cnt – bipolar
Input resistance	Current input: <100 Ω(1) Voltage input: >10 MΩ

Table 23 - Isolated Analog Input Modules (Continued)

Specification	1794-IF4I, 1794-IF4IXT
Data format	2's complement 2's complement percent Binary Offset binary
Input conversion type	Sigma Delta
Input conversion rate	2.5/5.0/7.5 ms all channels
Normal mode rejection ratio	-3 dB @ 12 Hz (300 Hz conversion rate) -80.0 dB @ 50 Hz (300 Hz conversion rate)
Calibration	Factory-calibrated(2)
Step response to 63% of FS, input	Current or voltage input: 1200 Hz conversion rate = 0.6 ms 600 Hz conversion rate = 6.7 ms 300 Hz conversion rate = 13.4 ms 150 Hz conversion rate = 26.7 ms
Dimensions (HxWxD), approx	46 x 94 x 53 mm (1.8 x 3.7 x 2.1 in.) 94 x 94 x 69 mm (3.7 x 3.7 x 2.7 in.) installed
Resolution	16 bit unipolar 15 bit + bipolar
Accuracy	Current input: 0.1% Full Scale @ 25 °C (77 °F) Voltage input: 0.1% Full Scale @ 25 °C (77 °F)(3)
Temperature, operating	**1794-IF4I:** 0...55 °C (32...131 °F) **1794-IF4IXT:** -20...+70 °C (-4...+158 °F)

(1) If 24V DC is removed from the module, input resistance = 10 kΩ.
(2) Can be calibrated in the field when necessary
(3) Includes offset, gain, non-linearity, and repeatability error terms

1794-IF4ICFXT Isolated Input Analog Module

In addition to the features supported by the 1794-IF4I and 1794-IF4IXT modules, the 1794-IF4ICFXT features three additional parameters that allow additional control over the way that the module processes the analog signals. The settings are at the module level.

Settings to these parameters affect all inputs set to 150 Hz, 300 Hz, or 600 Hz. The parameters do not affect channels set at 1200 Hz.

IMPORTANT Only connect either a voltage input or a current input per channel, not both.

Table 24 - Isolated Analog Input Modules

Specification	1794-IF4ICFXT
Maximum overload	30V continuous or 32 mA continuous, one channel at a time
Input resistance Voltage terminal Current terminal	 >10 MΩ <100 Ω(1)
Data format	2's complement 2's complement percent Binary Offset binary
Conversion type	Sigma Delta
Update rate	2.5/5.0/7.5 ms all channels. See input update rate table in FLEX I/O-XT Isolated Analog Input Module Installation Instructions, publication 1794-IN130.
Normal mode rejection ratio - Voltage or current terminal	-3 dB @ 12 Hz (300 Hz conversion rate) -80 dB @ 50 Hz (300 Hz conversion rate) -3 dB @ 6 Hz (150 Hz conversion rate) -80 dB @ 60 Hz (150 Hz conversion rate)
Calibration required	Factory-calibrated. The module can be calibrated in the field when necessary
Step response to 63% - Voltage or current terminal	1200 Hz conversion rate = 0.6 ms 600 Hz conversion rate = 06.7 ms 300 Hz conversion rate = 13.4 ms 150 Hz conversion rate = 26.7 ms
Dimensions (HxWxD), approx	46 x 94 x 75 mm (1.8 x 3.7 x 2.95 in.) with module installed in base

Table 24 - Isolated Analog Input Modules (Continued)

Specification	1794-IF4ICFXT
Resolution Voltage Current	16 bits - unipolar; 15 bits plus sign - bipolar 0.156 mV/cnt unipolar; 0313 mV/cnt bipolar 0.320 µA/cnt unipolar; 0.640 µA/cnt bipolar
Accuracy	Current input: 0.1% Full Scale @ 25 °C (77 °F) Voltage input: 0.1% Full Scale @ 25 °C (77 °F)(2)
Temperature, operating	-20...+70 °C (-4...+158 °F)

(1) If 24V DC is removed from the module, input resistance = 10 kΩ.
(2) Includes offset, gain, non-linearity, and repeatability error terms

1794-IF8IH HART Enabled Analog 8 Input Module

The 1794-IF8IH accepts up to 8 analog inputs. The inputs are isolated and accept current in either of the following two ranges: 4...20 mA or 0...20 mA. The default input range is 0...20 mA. The inputs have both fixed hardware filters and selectable firmware digital filters.

Table 25 - HART Enabled Analog 8 Input Module

Specification	1794-IF8IH
Current input, max overload	32 mA DC continuous, for any or all channels
Isolation voltage	120V (continuous), Basic Insulation Type Type tested @ 1000V AC for 60 s, between user power to system, channel to system, and channel to channel
Input resolution	16 bits – unipolar 15 bits + sign – bipolar 0.320 µA/cnt unipolar 0.640 µA/cnt bipolar
Input resistance	249 Ω ±1%
Data format	Engineering units Percent of Full Scale Proportional Count
Input conversion type	Sigma Delta Analog to Digital Converter
Normal mode rejection ratio	> 70 dB @ 50/60 Hz (4.17 Hz ADC conversion rate) > 65 dB @ 50/60 Hz (10.0 Hz ADC conversion rate) > 75 dB @ 50 Hz (16.7 Hz ADC conversion rate) > 85 dB @ 60 Hz (19.6 Hz ADC conversion rate)
Calibration	Factory-calibrated(1)
Step response to 63% of FS, input	4.17 Hz conversion rate = 480 ms 10.0 Hz conversion rate = 200 ms 16.7 Hz conversion rate = 120 ms 19.6 Hz conversion rate = 101 ms 62 Hz conversion rate = 32 ms 470 Hz conversion rate = 4 ms
Dimensions (HxWxD), approx	46 x 94 x 75 mm (1.8 x.7 x 2.9 in.) 94 x 94 x 91 mm (3.7 x 3.7 x 3.6 in.) installed
Accuracy	0.1% Full Scale @ 25 °C (77 °F)
Temperature, operating	0...55 °C (32...131 °F)

(1) Can be calibrated in the field when necessary

1794-IR8 RTD Input Module

The 1794-IR8 is a temperature-measuring module that accepts 2-wire and 3-wire RTDs. use the 1794-IR8 in applications where channel fast-update rate is not required. If you need channel fast-update rates, use the 1794-IRT8 module that is described in 1794-IRT8 and 1794-IRT8XT Thermocouple/RTD Input Module on page 37.

Table 26 - RTD Input Module

Specification	1794-IR8
Input resolution	16 bits across 435 Ω
Sensors supported	Resistance: 100 Ω Pt μ = 0.00385 Euro (-200...+870 °C) 100 Ω Pt μ = 0.003916 U.S. (-200...+630 °C) 200 Ω Pt μ = 0.00385 Euro (-200...+630 °C) 500 Ω Pt μ = 0.00385 U.S. (-200...+630 °C) 100 Ω Nickel μ = 0.00618 (-60...+250 °C) 120 Ω Nickel μ = 0.00672 (-60...+250 °C) 200 Ω Nickel μ = 0.00618 (-60...+250 °C) 500 Ω Nickel μ = 0.00618 (-60...+250 °C) 10 Ω Copper μ = 0.00427 (-200...+260 °C)
Data format	16 bits, 2's complement, left justified; Offset binary
Settling time	100% of final value available at system throughput rate
Normal mode rejection ratio	60 dB @ 60 Hz for A/D filter cutoff @ 15 Hz
Common mode rejection ratio	-120 dB @ 60 Hz -100 dB @ 50 Hz with A/D filter cutoff @ 10 Hz
Common mode voltage	0V between channels (common return)
Accuracy, normal mode (max)(1)	0.05% Full Scale (low humidity) without calibration
Accuracy, enhanced mode (typical)	0.01% Full Scale (low humidity) without calibration
System throughput, normal mode	Programmable from 28...325 ms/channel 325 ms (1 channel scanned) 2.6 s (8 channels scanned)
System throughput, enhanced mode	Programmable from 56...650 ms/channel 650 ms (1 channel scanned) 2.925 s (8 channels scanned)
Open RTD detection	Out of range upscale reading
Open circuit detection type	Available at system throughput rate
Overvoltage capability	35V DC, 25V AC continuous @ 25 °C (77 °F) 250V peak transient
Channel bandwidth	DC to 2.62 Hz (-3 dB)
RTD excitation current	718.39 μA
RFI immunity	Error of <1% of range @ 10V/m, 27...1000 MHz
Gain drift with temperature	Normal mode: 20 ppm/ °C max Enhanced mode: 10 ppm/ °C max
Dimensions (HxWxD), approx	46 x 94 x 53 mm (1.8 x 3.7 x 2.1 in.) 94 x 94 x 69 mm (3.7 x 3.7 x 2.7 in.) installed
Temperature, operating	-20...+55 °C (-4...+131 °F)

(1) The number is based on the hardware of the module only. Additional errors are introduced depending on the sensor that is used, the environment, and other factors. Contact technical support for more information.

Figure 16 - 1794-IR8 Derating Curve

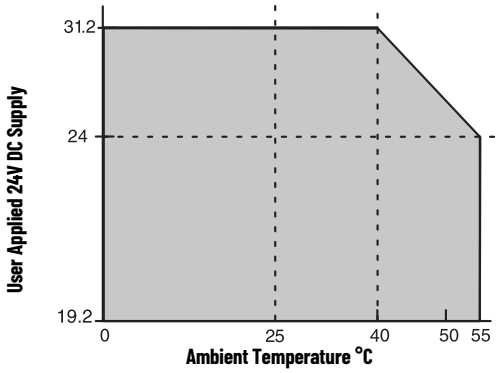

The area within the curve represents the safe operating range for the module under various conditions of user-supplied 24V DC supply voltages and ambient temperatures.

= Safe operating area

1794-IRT8 and 1794-IRT8XT Thermocouple/RTD Input Module

The 1794-IRT8 is a high-speed, high-accuracy temperature/mV measuring module that accepts thermocouple inputs, 2-wire, 3-wire, and 4-wire RTD inputs, and mV source inputs.

The 1794-IRT8 offers the following:

- Wire-off, overrange, and underrange detection
- Good common mode rejection
- Usage with long thermocouple wiring
- Effective in noisy environments
- Usage with grounded or ungrounded thermocouples
- More stability with ambient temperature changes than with 1794-IR8 and 1794-IT8 modules

Release of Series B version provides capability to work with grounded thermocouples.

Use cold junction compensators 1794-CJC2 in thermocouple mode. Two cold junction compensators are shipped with the 1794-IRT8.

The 1794-IRT8XT is the extended temperature version of the 1794-IRT8 module. The module is conformally coated.

Table 27 - Thermocouple/RTD Input Module

Specification	1794-IRT8 and 1794-IRT8XT
Input resolution	14 bits
Supported RTD types	Resistance: 100 Ω Pt μ = 0.00385 Euro (-200...+870 °C) 100 Ω Pt μ = 0.003916 U.S. (-200...+630 °C) 200 Ω Pt μ = 0.00385 Euro (-200...+400 °C) 200 Ω Pt μ = 0.003916 U.S. (-200...+400 °C) 100 Ω Nickel μ = 0.00618 (-60...+250 °C) 120 Ω Nickel μ = 0.00672 (-60...+320 °C) 200 Ω Nickel μ = 0.00618 (-60...+200 °C) 10 Ω Copper μ = 0.00427 (-200...+260 °C)
Supported Thermocouple types	Type B: 300...1800 °C (572...3272 °F) Type E: -270...+1000 °C (-454...+1832 °F) Type J: -210...+1200 °C (-346...+2192 °F) Type K: -270...+1372°C (-454...+2502 °F) Type N: -270...+1300°C (-454...+2372 °F) Type R: -50...+1768°C (-58...+3214 °F) Type S: -50...+1768°C (-58...+3214 °F) Type T: -270...+400°C (-454...+752 °F) Type TXK/XK (L): -200...+800°C (-328...+1472 °F)
Accuracy	0.05% of full range in mV mode with filtering selected Hardware only = 0.10% of full range in mV mode
Common mode rejection ratio	-80 dB @ 5V peak-to-peak 50...60 Hz
Common mode input range	Series A – ±4V Series B – ±15V
System throughput	7.4 ms – mV 8.0 ms – Ω – 2-wire 10.0 ms – Ω – 3-wire 10.4 ms – Ω – 4-wire 8.0 ms – Ω – 2-wire RTD (°F) 10.4 ms – Ω – 4-wire RDT (°F) 8.8 ms – Ω – 2-wire RDT (°C), (°K) 10.8 ms – Ω – 4-wire RDT (°C), (°K) 9.8 ms – Ω – 3-wire RDT (°F) 10.0 ms – Ω – 3-wire RDT (°C), (°K) 8.0 ms – Thermocouples (°F) 8.8 ms – Thermocouples (°C), (°K)(1)
Open circuit detection type	Series A: RTD and TC modes - Open input – Module defaults to max value Series B: RTD mode - Open input – Module defaults to max value Series B: TC mode - Open input – Module defaults to min value
Excitation current	630 μA
Overvoltage capability	Series A: 7V DC continuous @ 25 °C (77 °F) Series B: 15V DC continuous @ 25 °C (77 °F)

Table 27 - Thermocouple/RTD Input Module (Continued)

Specification	1794-IRT8 and 1794-IRT8XT
Open input detection time	0...3.8 s for Series A, revision D or earlier Immediate detection (max 2 scans) for Series A, revision E or later Immediate detection (max 2 scans) for Series B
Cold junction compensation range	0...70 °C for firmware Series A, revision D or earlier -20...+100 °C for firmware Series A, revision E or later -20...+100 °C for firmware Series B
Cold junction compensation	Allen-Bradley Cold Junction Compensation Kit, 1794-CJC(2)
Data format	°C (implied decimal point XXX.X) °F (implied decimal point XXX.X) °K (implied decimal point XXX.X) -32767...+32767 0...65535 0...5000 (Ω mode) (implied decimal point XXX.X) -4000...+10000 (mV mode) (implied decimal point XXX.XX)
Overall drift with temperature, max	Series A: 150 ppm/°C of span Series B: 50 ppm/°C of span
Dimensions (HxWxD), approx	46 x 94 x 53 mm (1.8 x 3.7 x 2.1 in.) 94 x 94 x 69 mm (3.7 x 3.7 x 2.7 in.) installed
Temperature, operating	**1794-IRT8:** -20...+55 °C (-4...+131 °F) **1794-IRT8XT:** -20...+70 °C (-4...+158 °F)

(1) For maximum throughput, short circuit all unused channels.
(2) A kit is supplied with the module and contains 2 compensators.

1794-IT8 Thermocouple/mV Input Module

The 1794-IT8 module is a temperature/mV measuring module that accepts inputs from various thermocouples and from the mV source in the range of ±76.5 mV. Choose the 1794-IT8 module when you need the following:

- A cost-effective module.
- Applications that don't require high accuracy or high speed.
- Support for grounded or ungrounded thermocouples.

Use cold junction compensators (1794-CJC2) in thermocouple mode. Two cold junction compensators are shipped with the 1794-IT8 module. This module is suitable to work with grounded thermocouples, if certain guidelines are followed. See Thermocouple/Millivolt Input Module User Manual, publication 1794-UM007 for more information.

The FLEX I/O cold junction compensator kit, containing two compensators, is included with the 1794-IT8 module. You can order additional compensators using catalog number 1794-CJC2.

Table 28 - Thermocouple/mV Input Module

Specification	1794-IT8
Input resolution	16 bits (2.384 µV typical)
Supported Thermocouple types	Type B: 300...1800 °C (572...3272 °F) Type C: 0...2315 °C (32...4199 °F) Type E: -270...+1000 °C (-454...+1832 °F) Type J: -210...+1200 °C (-346...+2192 °F) Type K: -270...+1372°C (-454...+2502 °F) Type N: -270...+1300°C (-454...+2372 °F) Type R: -50...+1768°C (-58...+3214 °F) Type S: -50...+1768°C (-58...+3214 °F) Type T: -270...+400°C (-454...+752 °F) Type TXK/SK(L): -200...+800°C (-328...+1472 °F)
Data format	16 bits, 2's complement; Offset binary (unipolar)
Settling time	100% of final value available at system throughput rate
Normal mode rejection ratio	-60 dB @ 60 Hz
Common mode rejection ratio	-115 dB @ 60 Hz -100 dB @ 50 Hz
Common mode input range	± 10V
Accuracy(1)	With filter (max): 0.025% Full Scale @ 25 °C (±0.5 °C) (77 °F [±33 °F]) Without filter (max): 0.05% Full Scale @ 25 °C (±0.5 °C) (77 °F [±33 °F])

Table 28 - Thermocouple/mV Input Module (Continued)

Specification	1794-IT8
System throughput	325 ms (1 channel scanned), programmable to 28 ms 2.6 s (8 channels scanned), programmable to 224 ms
Open input detection	Available at system throughput rate
Open circuit detection type	Out of range reading (upscale)
Overvoltage capability	35V DC, 25V AC continuous @ 25 °C (77 °F) 250V peak transient
Channel bandwidth	0...2.62 Hz (-3 dB)
RFI immunity	Error of <1% of range @ 10V/m, 27...1000 MHz
Input offset drift with temperature	+6 µV/°C max
Gain drift with temperature, max	10 ppm/°C
Overall drift with temperature, max	50 ppm/°C of span
Cold junction compensation range	0...70 °C (32...158 °F)
Cold junction compensation	Allen-Bradley Cold Junction Compensation Kit, 1794-CJC(2)
Dimensions (HxWxD), approx	46 x 94 x 53 mm (1.8 x 3.7 x 2.1 in.) 94 x 94 x 69 mm (3.7 x 3.7 x 2.7 in.) installed
Temperature, operating	-20...+55 °C (-4...+131 °F)

(1) The number is based on the hardware of the module only. See Thermocouple/Millivolt Input Module User Manual, publication 1794-UM007 for the complete error calculation procedure.
(2) A kit is supplied with the module and contains 2 compensators.

Figure 17 - 1794-IRT8 Derating Curve

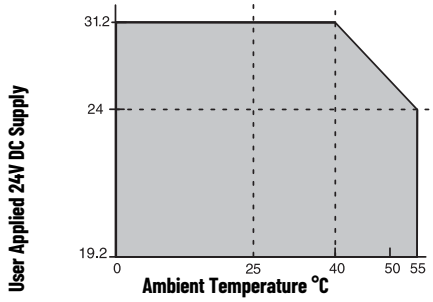

The area within the curve represents the safe operating range for the module under various conditions of user-supplied 24V DC supply voltages and ambient temperatures.

= Safe operating area

1794-IE8X0E4 and 1794-IE8X0E4K 8 Input/4 Output Analog Combination Module

The 1794-IE8X0E4 is a combination module with 8 inputs and 4 outputs. You can configure inputs and output individually for different modes. Inputs accept signals from 2-wire, 3-wire, and 4-wire input sensors in the ranges of ±10V or 0... 20 mA. Outputs produce signals in the range of ±10V or 0...20 mA.

The 1794-IE8X0E4K is the conformal coated version of the 1794-IE8X0E4 module.

Table 29 - 8 Input/4 Output Analog Combination Module

Specification	1794-IE8X0E4, 1794-IE8X0E4K
Calibration	None required
Input conversion type	Successive approximation
Input conversion rate	8 ms all channels
Input resolution	16 bit, 2's complement 320 µV/cnt 0.641 µA/cnt
Data format	16 bits, left justified
Step response to 63% of FS, input	Current or voltage input: 1.3 s (0.09 s with Quick Step)

Table 29 - 8 Input/4 Output Analog Combination Module (Continued)

Specification	1794-IE8X0E4, 1794-IE8X0E4K
Step response to 63% of FS, output	-70% 1st convert 96% 2nd convert 100% 3rd convert
Normal mode rejection ratio	Voltage/current terminal: -3 dB @ 0.05 Hz; -20 dB/decade -52 dB @ 50 Hz -54 dB @ 60 Hz Voltage/current terminal with Quick Step: -3 dB @ 1.5 Hz; -20 dB/decade -29 dB @ 50 Hz -31 dB @ 60 Hz
Accuracy(1)	Current input or output: 0.1% Full Scale @ 25 °C (77 °F) Voltage input or output: 0.1% Full Scale @ 25 °C (77 °F)
Accuracy drift with temperature	Current input or output: 0.004% Full Scale @ 25 °C (77 °F) Voltage input or output: 0.004% Full Scale @ 25 °C (77 °F)
Input impedance(2)	Current input: <100 Ω Voltage input: >1 MΩ
Voltage input, overload, max	30V, single channel, continuous
Output resolution	16 bit, 2's complement 320 µV/cnt 0.641 µA/cnt
Output conversion type	Digital-to-analog converter
Output conversion rate	Outputs: DAC
Current load on voltage output, max	3.0 mA
Resistive load on current output	0...750 Ω over full power supply range
Dimensions (HxWxD), approx	46 x 94 x 53 mm (1.8 x 3.7 x 2.1 in.) 94 x 94 x 69 mm (3.7 x 3.7 x 2.7 in.) installed
Weight, approx.	102 g (3.6 oz.)
Temperature, operating	-20...+60 °C (-4...+140 °F)

(1) Includes offset, gain, non-linearity, and repeatability error terms
(2) If 24V DC is removed from the module, input resistance = 10 KΩ.

1794-IE4X0E2 and 1794-IE4X0E2XT 4 Input/2 Output Analog Combination Modules

The 1794-IE4X0E2 is a combination module with 4 inputs and 2 outputs. Inputs can be configured individually for different modes. Inputs accept signals from various input sensors (2-wire, 3-wire, and 4-wire) in the range of ±10V or 0...20 mA. Outputs are also individually configurable for different modes. Outputs produce signals in the range of ±10V or 0...20 mA.

1794-IE4X0E2XT is the extended temperature version of the 1794-IE4X0E2 module.

Table 30 - 4 Input/2 Output Analog Combination Modules

Specification	1794-IE4X0E2, 1794-IE4X0E2XT
Calibration	None required
Input conversion type	Successive approximation
Input conversion rate	256 µs all channels
Input resolution	12 bits – unipolar 11 bits + sign – bipolar 5.13 µA/cnt 2.56 µV/cnt – unipolar 5.13 µV/cnt – bipolar
Data format	16 bits, 2's complement; left justified
Step response to 63% of FS, input	Current input: 18.2 ms Voltage input: 9.4 ms
Step response to 63% of FS, output	Current or voltage output: 24 ms

Table 30 - 4 Input/2 Output Analog Combination Modules (Continued)

Specification	1794-IE4X0E2, 1794-IE4X0E2XT
Normal mode rejection ratio	Current input: -3 dB @ 9 Hz; -20 dB/decade -15.3 dB @ 50 Hz -16.8 dB @ 60 Hz Voltage input: -3 dB @ 17 Hz; -20 dB/decade -10 dB @ 50 Hz -11.4 dB @ 60 Hz
Accuracy(1)	Current input: 0.20% Full Scale @ 25 °C (77 °F) Voltage input: 0.20% Full Scale @ 25 °C (77 °F) Current output: 0.425% Full Scale @ 25 °C (77 °F) Voltage output: 0.133% Full Scale @ 25 °C (77 °F)
Accuracy drift with temperature	Current input: 0.0407% Full Scale @ 25 °C (77 °F) Voltage input: 0.0428% Full Scale @ 25 °C (77 °F) Current output: 0.0069% Full Scale @ 25 °C (77 °F) Voltage output: 0.0045% Full Scale @ 25 °C (77 °F)
Input impedance	Current input: 238 Ω Voltage input: 100 kΩ
Voltage input, overload, max	30V, single channel, continuous
Output resolution	12 bits + sign 5.13 µA/cnt 2.56 mV/cnt
Output conversion type	Pulse-width modulation
Output conversion rate	1.024 ms all channels
Current load on voltage output, max	3 mA
Resistive load on current output	15...750 Ω
Dimensions (HxWxD), approx	46 x 94 x 53 mm (1.8 x 3.7 x 2.1 in.) 94 x 94 x 69 mm (3.7 x 3.7 x 2.7 in.) installed
Temperature, operating	**1794-IE4X0E2:** -20...+55 °C (-4...+131 °F) **1794-IE4X0E2XT:** -20...+70 °C (-4...+158 °F)

(1) Includes offset, gain, non-linearity, and repeatability error terms.

1794-IF2X0F2I and 1794-IF2X0F2IXT 2 Input/2 Output Isolated Analog Combination Module

The 1794-IF2X0F2I is a combination module with 2 inputs and 2 outputs with isolated, individually configurable channels. Inputs accept signals from various input sensors (2-wire, 3-wire, and 4-wire) in the range of ±10V or ±20 mA. Outputs produce signals in the range of ±10V or 0...20 mA.

The 1794-IF2X0F2IXT is the extended temperature version of the 1794-IF2X0F2I module.

ATTENTION: Only connect either a voltage input or a current input per channel, not both.

Table 31 - 2 Input/2 Output Isolated Analog Combination Module

Specification	1794-IF2X0F2I, 1794-IF2X0F2IXT
Calibration	Factory-calibration(1)
Input conversion type	Sigma Delta
Input conversion rate	2.5/5.0/7.5 ms all channels
Input resolution	16 bit – unipolar 15 bit + sign – bipolar 0.156 mV/cnt – unipolar 0.313 mV/cnt – bipolar 0.320 µA/cnt – unipolar 0.640 µA/cnt – bipolar
Isolation voltage	120V continuous (when used with 1794-TB3, 1794-TB3S, 1794-TB2, 1794-TB3T, or 1794-TB3TS) 250V continuous (when used with 1794-TBN) Tested at 1500V AC for 60 s and 2550V DC for 1 s, channel to channel, I/O to system

Table 31 - 2 Input/2 Output Isolated Analog Combination Module (Continued)

Specification	1794-IF2XOF2I, 1794-IF2XOF2IXT
Data format	16 bits, 2's complement 2's complement percent Binary Offset binary
Step response to 63% of FS, input	Current or voltage input: 1200 Hz conversion rate = 0.6 ms 600 Hz conversion rate = 6.7 ms 300 Hz conversion rate = 13.4 ms 150 Hz conversion rate = 26.7 ms
Normal mode rejection ratio	-3 dB @ 12 Hz (300 Hz conversion rate) -80.0 dB @ 50 Hz (300 Hz conversion rate) -3 dB at 6 Hz (150 Hz conversion rate) -80 dB at 60 Hz (150 Hz conversion rate)
Accuracy(2)	Current input or output: 0.1% Full Scale @ 25 °C (77 °F) Voltage input or output: 0.1% Full Scale @ 25 °C (77 °F)
Accuracy drift with temperature	Current input: 0.0038% Full Scale/°C Voltage input: 0.0028% Full Scale /°C Current output: 0.0025% Full Scale /°C Voltage output: 0.0012% Full Scale /°C
Input impedance	Current input: <100 Ω Voltage input: >1 MΩ(3)
Voltage input, overload, max	30V, single channel, continuous
Output resolution	15 bit + sign 0.656 µA/cnt 0.320 mV/cnt
Output conversion type	Digital-to-analog converter
Output conversion rate	2.5/5.0 ms
Current load on voltage output, max	3 mA
Resistive load on current output	0...750 Ω
Dimensions (HxWxD), approx	**1794-IF2XOF2I:** 46 x 94 x 53 mm (1.8 x 3.7 x 2.1 in.) 94 x 94 x 69 mm (3.7 x 3.7 x 2.7 in.) installed **1794-IF2XOF2IXT:** 46 x 94 x 75 mm (1.8 x 3.7 x 2.9 in.) 94 x 94 x 91 mm (3.7 x 3.7 x 3.6 in.) installed
Temperature, operating	**1794-IF2XOF2I:** -20...+55 °C (-4...+131 °F) **1794-IF2XOF2IXT:** -20...+70 °C (-4...+158 °F)

(1) Can be calibrated in the field when necessary
(2) Includes offset, gain, non-linearity, and repeatability error terms
(3) If 24V DC is removed from the module, input resistance = 10 kΩ

FLEX I/O Analog Output Modules

Analog Output Comparison

Catalog Number	Output Signal Range	External DC Supply Current, Nom	Power Dissipation, Max	Thermal Dissipation, Max
1794-OE4(1)	4...20 mA 0...20 mA ±10V 0...10V	70 mA @ 24V DC(2)	4.5 W @ 31.2V DC	15.3 BTU/hr @ 31.2V DC
1794-OE4XT		180 mA @ 10.5V DC		13.6 BTU/hr @ 31.2V DC
1794-OE8H	4...20 mA (user configurable) 0...20 mA (user configurable)	255 mA @ 24V DC	6.1 W	20.8 BTU/hr
1794-OE12	0 mA output until module is configured 4...20 mA (user configurable) 0...20 mA (user configurable)	320 mA @ 24V DC; 720 mA @ 10.0V DC	40 W @ 31.2V DC; 7.68 W @ 24V DC; 10.0 W @ 10.0V DC	26.2 BTU/hr @ 24V DC
1794-OF4I	4...20 mA 0...20 mA ±10V 0...10V ±5V 0...5V	210 mA @ 24V DC	4.7 W @ 31.2V DC	16 BTU/hr @ 31.2V DC

Analog Output Comparison (Continued)

Catalog Number	Output Signal Range	External DC Supply Current, Nom	Power Dissipation, Max	Thermal Dissipation, Max
1794-OF8IH	4...20 mA (user configurable) 0...20 mA (user configurable)	450 mA @ 24V DC	5.0 W @ 31.2V DC	6.8 BTU/hr @ 31.2V DC
1794-IE8XOE4(1)	4...20 mA 0...20 mA ±10V 0...10V	140 mA @ 24V DC; 280 mA @ 10.0V DC	3.0 W @ 31.2V DC; 3.4 W @ 24V DC; 2.0 W @ 10.0V DC	11.6 BTU/hr @ 24V DC
1794-IE4XOE2(1)	4...20 mA 0...20 mA ±10V 0...10V	70 mA @ 24V DC	4.0 W @ 31.2V DC	13.6 BTU/hr @ 31.2V DC
1794-IF2XOF2I(1)	4...20 mA 0...20 mA ±10V 0...10V ±5V 0...5V	150 mA @ 24V DC	3.3 W @ 31.2V DC	11 BTU/hr @ 31.2V DC

(1) Each module's channel is individually selectable or as a group of four.
(2) Not including outputs.

1794-OE4 and 1794-OE4XT Analog 4 Output Module

The 1794-OE4 module has 4 output, non-isolated, individually configurable channels. Outputs can drive the field devices that require a voltage of ±10V or a current of 0...20 mA.

Table 32 - Analog 4 Output Modules

Specification	1794-OE4	1794-OE4XT
Output resolution	12 bit + sign 2.56 mV/cnt 5.13 µA/cnt	12 bits + sign 0.156 mV/cnt 0.320 µA/cnt
Data format	16 bits, 2's complement, left justified	
Output conversion type	Pulse-width modulation	
Output conversion rate	1.024 ms all channels	Outputs: PWM
Step response to 63% of FS, output	Voltage output: 24 ms	
Current load on voltage output, max	3 mA	
Output current, resistive load	15...750 Ω	
Accuracy	Current input: 0.425% Full Scale @ 25 °C (77 °F) Voltage input: 0.133% Full Scale @ 25 °C (77 °F)(1)	
Accuracy drift w/temp	Current input: 0.0069% Full Scale /°C Voltage input: 0.0045% Full Scale/°C	
Calibration	None required	
Isolation voltage	50 (continuous), I/O to system Type tested at 850V DC for 1 s, I/O to system No isolation between individual channels	50 (continuous), I/O to system Type tested at 850V DC for 60 s No isolation between individual channels
Power dissipation, max	4.5 W @ 31.2V DC	
Thermal dissipation, max	15.3 BTU/hr @ 31.2V DC	13.6 BTU/hr @ 31.2V DC
Wire size	0.34...2.5 mm^2 (22...2 AWG) solid or stranded shielded copper wire rated at 75 °C (167 °F) or greater 1.2 mm (3/64 in.) insulation max	
Wire category	2 - On signal ports 2 - On power ports(2)	2 - On signal ports
Dimensions (HxWxD), approx	46 x 94 x 53 mm (1.8 x 3.7 x 3.1 in.) 94 x 94 x 69 mm (3.7 x 3.7 x 2.7 in.) installed	
Temperature, operating	-20...+55 °C (-4...+131 °F)	-20...+70 °C (-4...+158 °F)

(1) Includes offset, gain, non-linearity, and repeatability error terms
(2) Use this Conductor Category information for planning conductor routing. See Industrial Automation Wiring and Grounding Guidelines, publication 1770-4.1.

1794-OE8H HART Enabled Analog 8 Output Module

The 1794-OE8H is a HART enabled analog output module that works with HART enabled field devices that use current in the 0...20 mA range. Use with 2-wire devices. This module provides wire-off detection on a per-channel basis.

This module can be used on ControlNet, EtherNet/IP, or PROFIBUS DP networks. One HART field device per channel.

Table 33 - HART Enabled Analog 8 Output Module

Specification	1794-OE8H
Output resolution	13 bit
Data format	Configurable
Output conversion type	—
Output conversion rate	10 ms for all channels
Step response to 99% of FS, output	13 ms to 99% of FS 115 ms during HART communication
Current load on voltage output, max	0...22 mA @ > 15V
Output current, resistive load	0...680 Ω @ 22 mA 0...770 Ω @ 20 mA
Accuracy	0.1% Full Scale @ 20 °C (68 °F)
Accuracy drift with temperature	0.010% Full Scale @ 20 °C (68 °F)
Calibration	—
Isolation voltage	50V (continuous), Basic Insulation Type No isolation between individual channels
Power dissipation, max	6.1 W
Thermal dissipation, max	20.8 BTU/hr
Wire size	0.34...2.5 mm^2 (22...12 AWG) solid or stranded shielded copper wire rated at 75 °C (167 °F) or greater 1.2 mm (3/64 in.) insulation max
Wire category	2 - On signal ports 2 - On power ports(1)
Dimensions (HxWxD), approx	46 x 94 x 75 mm (1.8 x 3.7 x 2.95 in.) 94 x 94 x 91 mm (3.7 x 3.7 x 3.6 in.) installed
Temperature, operating	-20...+55 °C (-4...+131 °F)

(1) Use this Conductor Category information for planning conductor routing. See Industrial Automation Wiring and Grounding Guidelines, publication 1770-4.1.

1794-OE12 Analog 12 Output Module

1794-OE12 module is a High-Density analog output module, capable of providing current in the range of 0...20mA or voltage in the range of ±10V, depending on the user configuration. Out of Range status bit exists for each channel.

Table 34 - Analog 12 Output Module

Specification	1794-OE12
Output resolution	320 µV/cnt 0.641 µA/cnt
Data format	Configurable
Output conversion type	Digital to analog converter
Output conversion rate	Outputs: DAC
Step response to 63% of FS, output	~70% 1st convert 96% 2nd convert 100% 3rd convert
Current load on voltage output, max	3 mA
Output current, resistive load	0...750 Ω over full power supply range
Accuracy	Current Output: 0.1% Full Scale at 25 °C (77 °F) Voltage Output: 0.1% Full Scale at 25 °C (77 °F)
Accuracy drift w/temp	Current Output: 0.004% Full Scale/°C Voltage Output: 0.004% Full Scale/°C
Calibration	None required

Table 34 - Analog 12 Output Module (Continued)

Specification	1794-OE12
Isolation voltage	50V (continuous), Basic Insulation Type Type tested at 850V DC for 60 s, between field side and system No isolation between individual channels
Power dissipation, max	4.0 W @ 31.2V DC 4.3 W @ 24V DC 4.0 W @ 10.0V DC
Thermal dissipation, max	14.7 BTU/hr @ 24V DC
Wire size	0.34...2.5 mm^2 (22...12 AWG) solid or stranded shielded copper wire rated at 75 °C (167 °F) or greater 1.2 mm (3/64 in.) insulation max
Wire category	2 - On signal ports 2 - On power ports(1)
Dimensions (HxWxD), approx	46 x 94 x 53 mm (1.8 x 3.7 x 3.1 in.) 94 x 94 x 69 mm (3.7 x 3.7 x 2.7 in.) installed
Temperature, operating	-20...+60 °C (-4...+140 °F)

(1) Use this Conductor Category information for planning conductor routing. See Industrial Automation Wiring and Grounding Guidelines, publication 1770-4.1.

1794-OF4I and 1794-OF4IXT Isolated Analog 4 Output Module

The 1794-OF4I module provides 4 isolated outputs for 2-wire, 3-wire, and 4-wire output devices that use voltage in the range of ±10V or 0...20 mA current.

1794-OF4IXT is the extended temperature version of the 1794-OF4I module.

Table 35 - Isolated Analog 4 Output Module

Specification	1794-OF4I, 1794-OF4IXT
Output resolution	15 bit + sign 0.656 µA/cnt 0.320 mV/cnt
Data format	2's complement 2's complement percent Binary Offset binary
Output conversion type	Digital to analog converter
Output conversion rate	2.5/5.0 ms
Step response to 63% of FS, output	Current or voltage output: <25 µs
Current load on voltage output, max	3 mA
Output current, resistive load	0...750 Ω
Accuracy	Current input: 0.1% Full Scale @ 25 °C (77 °F) Voltage input: 0.1% Full Scale @ 25 °C (77 °F)(1)
Accuracy drift w/temp	Current input: 0.0025% Full Scale /°C Voltage input: 0.0012% Full Scale/°C
Calibration	Factory-calibrated
Isolation voltage	120V (continuous), when used with 1794-TB2, 1794-TB3, 1794-TB3S, 1794-TB3T, or 1794-TB3TS 250V (continuous), when used with 1794-TBN Type tested at 1500V AC for 60 s, and 2550V DC for 1 s, channel to channel, I/O to system
Power dissipation, max	4.7 W @ 31.2V DC
Thermal dissipation, max	16 BTU/hr @ 31.2V DC
Wire size	0.34...2.5 mm^2 (22...12 AWG) solid or stranded shielded copper wire rated at 75 °C (167 °F) or greater 1.2 mm (3/64 in.) insulation max

Table 35 - Isolated Analog 4 Output Module (Continued)

Specification	1794-OF4I, 1794-OF4IXT
Wire category	2 - On signal ports 3 - On power ports(2)
Dimensions (HxWxD), approx	**1794-OF4I:** 46 x 94 x 53 mm (1.8 x 3.7 x 3.1 in.) 94 x 94 x 69 mm (3.7 x 3.7 x 2.7 in.) installed **1794-OF4IXT:** 46 x 94 x 75 mm (1.8 x 3.7 x 2.95 in.) 94 x 94 x 91 mm (3.7 x 3.7 x 3.6 in.) installed
Temperature, operating	**1794-OF4I:** -20...+55 °C (-4...+131 °F) **1794-OF4IXT:** -20...+70 °C (-4...+158 °F)

(1) Includes offset, gain, non-linearity, and repeatability error terms
(2) Use this Conductor Category information for planning conductor routing. See Industrial Automation Wiring and Grounding Guidelines, publication 1770-4.1.

1794-OF8IH HART Isolated Analog 8 Output Module

The 1794-OF8IH module provides 8 HART enabled isolated outputs for 2-wire, 3-wire, and 4-wire output devices that use voltage in the range of ±10V or 0...20 mA current.

Table 36 - HART Isolated Analog 8 Output Module

Specification	1794-OF8IH
Output resolution	16 bits – unipolar 0.305 µA/cnt unipolar
Data format	Engineering units Percent of Full Scale RAW/proportional count
Output conversion type	16-Bit Digital to Analog Converter
Output conversion rate	10 ms
Step response to 63% of FS, output	< 70 ms
Output current, resistive load	0...750 Ω
Accuracy	± 0.1% Full Scale at 25 °C (77 °F) ± 0.35% Full Scale at 0...55 °C
Accuracy drift w/temp	± 0.008% /°C 0.0038 Full Scale /°C
Calibration	Factory-calibrated
Isolation voltage	120V (continuous), Basic Insulation Type Type tested at 1000V AC for 60 s, between user power to system, channel to system, and channel to channel
Power dissipation, max	5.0 W @ 31.2V DC
Thermal dissipation, max	16 BTU/hr @ 31.2V DC
Wire size	0.34...2.5 mm^2 (22...12 AWG) solid or stranded shielded copper wire rated at 75 °C (167 °F) or greater 1.2 mm (3/64 in.) insulation max
Wire category	2 - On signal ports 3 - On power ports(1)
Dimensions (HxWxD), approx	46 x 94 x 75 mm (1.8 x 3.7 x 2.95 in.) 94 x 94 x 91 mm (3.7 x 3.7 x 3.6 in.) installed
Temperature, operating	0...55 °C (32...131 °F)

(1) Use this Conductor Category information for planning conductor routing. See Industrial Automation Wiring and Grounding Guidelines, publication 1770-4.1.

FLEX I/O Counter Modules

To decide which FLEX I/O counter module that best suits your application needs, you must identify the following:

- What type of application the module is used for
- What field devices, signal levels, and signal type are being connected to the counter module

Counter Module Comparison

Catalog Number	Application	Network Capability	Number of Inputs/ Outputs	External DC Supply Current, Nom	Power Dissipation, Max	Thermal Dissipation, Max
1794-IJ2 1794-IJ2XT	Rational control, including: • Turbine generators • Motors • Drives • Gears • Shaft	All networks supported by FLEX I/O	2 Input 2 Output	220 mA @ 19.2V DC 180 mA @ 24V DC 140 mA @ 31.2V DC	4.5 W @ 31.2V DC	15.3 BTU/hr @ 31.2V DC
1794-VHSC	Applications including: • Packaging • Material handling • Flow monitoring • Cut-to-length • Motor speed control • Monitoring	ControlNet: • 1794-ACN15 • 1794-ACNR15 EtherNet/IP: • 1794-AENT • 1794-AENTR	2 Input 2 Output	100 mA @ 24V DC(1)	5 W @ 31.2V DC	17.1 BTU/hr @ 31.2V DC
1794-ID2	Applications including: • Quality counting • Positioning • Speed calculations	All networks supported by FLEX I/O	2 Input	150 mA @ 12V DC 75 mA @ 24V DC	5.0 W @ 26.4V DC	17.1 BTU/hr @ 26.4V DC
1794-IP4	Applications including: • Counting pulse from flowmeters • Counting pulse from density meters • Quality counting • Speed calculations		4 Input			

(1) Does not represent the power required to supply the inputs or outputs

1794-IJ2 and 1794-IJ2XT 24V DC Input Frequency Module

The 1794-IJ2 is essentially a tachometer with the capability of reporting frequency, acceleration, and direction. Outputs are activated by alarms. Input devices range from magnetic pickup to flowmeters, to incremental encoders to proximity detectors. This intelligent I/O module is designed to perform high-speed frequency algorithms. The module provides 2 frequency inputs, 2 gate inputs, and 2 outputs. The frequency inputs can accept frequencies up to 32K Hz. The module accepts and returns binary data.

The 1794-IJ2 measures frequency over a user-specified time interval. A frequency calculation can start before the time interval has elapsed, if a user-specified number of frequency input pulses have occurred.

The module's primary target is high-speed, accurate frequency measurement. As such, a high-speed internal clock is synchronized with the frequency input to count over a user-selected sampling time or a user-defined number of frequency input pulses.

Power to the module is supplied from the external power supply. All power for input devices (24V DC) is supplied by the I/O module. Outputs are used to set alarms depending on the input conditions.

The 1794-IJ2 module accepts the following frequency inputs:

- 24V DC IEC1+ proximity switch as defined by standard IEC 1131-2
- 24V DC contact switch with wire off capability
- 500 mV AC magnetic pickup
- 50 mV AC magnetic pickup
- 6V AC vortex
- 3V AC vortex

The 1794-IJ2 module accepts the following gate inputs:

- 24V DC IEC1+ proximity switch as defined by standard IEC 1131-2
- 24V DC contact switch
- 500 mV AC magnetic pickup
- 50 mV AC magnetic pickup

Customer supplied power, ranging from 10...31.2V DC, is connected internally to the power output transistor. When an output is turned on, current flows into the source out of the drain, through the load connected to the ground of the customer supply (customer return). Diode D6 protects the power output transistors from damage due to inductive loads. Output Q1 is a thermally protected FET and turns off at 3 A (approximately). After an output goes into thermal shutdown, you must fix the cause of the shutdown and toggle the outputs On and Off to re energize the output. RT1 protects D6 and Q1 if power supply polarity is reversed.

The frequency input module isolated power supply consists of 1 isolated 24V DC power supply that provides 2 current limited outputs of 30 mA maximum (1 for each channel).

Table 37 - 24V DC Input Frequency Module

Specification	1794-IJ2, 1794-IJ2XT
Processing time	≤ 4 ms
Input frequency, max	1...32 kHz w/sine wave 1...32 kHz w/square wave input
Frequency value, max	32,767 or 3,276.7 (dependent on range)
Input pulse width, min	20 µs
Voltage, on-state input, min	10V (24V IEC+1 proximity, encoder input, or switch inputs)
Voltage, on-state input, nom	24V DC
Voltage, on-state input, max	Limited to isolated 24V DC power supply
Current, on-state input, min	2.0 mA
Current, on-state input, nom	9.0 mA
Current, on-state input, max	10.0 mA
Voltage, off-state input, max	5.0V DC on 24V DC IECI + terminal
Current, off-state input, max	1.5 mA into 24V DC IECI + terminal
Wire-off detection	0.4 mA for proximity, encoder, or contact switch with 50 kW shunt resistor
Impedance, frequency input	>5 kΩ for 50 mV extended magnetic pickup >5 kΩ for 500 mV magnetic pickup >10 kΩ for 3V vortex flowmeter >10 kΩ for 6V vortex flowmeter >2.5 kΩ for 24V DC IEC1+ proximity or encoder input >2.5 kΩ for 24V DC contact switch input
Impedance, gate input	>5 kΩ for 50 mV extended magnetic pickup >5 kΩ for 500 mV magnetic pickup >2.5 kΩ for 24V DC IEC1+ proximity or encoder input >2.5 kΩ for 24V DC contact switch input
Output voltage source	Customer supplied
Voltage, on-state output, min	10V DC
Voltage, on-state output, nom	24V DC
Voltage, on-state output, max	31.2V DC
Current, on-state output, min	1.0 mA per output
Current, on-state output, max	1.0 A per channel sourced out of module(1)
Output surge current, max	2 A for 50 ms, repeatable every 2 s
Voltage drop, on-state output, max	0.9V DC @ 1 A
Output control	Outputs individually assignable to: Frequency % Full Scale Acceleration alarm
Output switching time	Triggered by frequency alarm or acceleration alarm Turn On: < 0.5 ms Turn Off: < 1 ms
Dimensions (HxWxD), approx	46 x 94 x 53 mm (1.8 x 3.7 x 3.1 in.) 94 x 94 x 69 mm (3.7 x 3.7 x 2.7 in.) installed
Temperature, operating	**1794-IJ2:** -20...+55 °C (-4...+131 °F) **1794-IJ2XT:** -20...+70 °C (-4...+158 °F)

(1) Current Limited: All outputs can be on simultaneously without derating.

1794-VHSC 2 Channel Very High-Speed Counter Module

A counter module has two incremental quadrature encoder interfaces each with three inputs (A, B, and Z). Each input module has ± inputs for connection to pulse transmitters with complementary or non-complementary signals.

The counter can count pulses of one or two pulse trains for up/down counting and detection of a selectable number of edges (X1, X2, X4). Each of the two counters has an upper limit of 1 MHz, a 24-bit counter register, a preset register, and a latch register.

Power to the module is supplied from an external 24V power supply. The 1794-VHSC has two outputs that can be configured for overlapping, multiple windows, and/or pulse-width modulation.

Table 38 - 2 Channel Very High-Speed Counter Module

Specification	1794-VHSC
Input groups	2 groups of A/A, B/B, and Z/Z pairs with 5V DC or 15...24V DC terminations
Input frequency, max	1.0 MHz counter and encoder X1 (no filters) 500 kHz encoder X2 (no filters) 250 kHz encoder X4 (no filters)
Voltage, on-state input, min	5V DC terminations: >2.6V DC 15...24V DC terminations: >12.5V DC
Voltage, on-state input, max	5V DC terminations: ±6V 15...24V DC terminations: See Figure 18
Voltage, off-state input, min	5V DC terminations: ≤ 1.25V DC 15...24V DC terminations: ≤ 1.8V DC
Current, on-state input, min	>5 mA
Current, on-state input, max	≤ 0.250 mA
Input filter selections	5: Off, 10 µs, 100 µs, 1.0 ms, 10.0 ms per A/B/Z group
Output control	Outputs can be tied to 8 compare windows
Output supply voltage range	5...7V DC or 10...31V DC
Leakage current, off-state output, max	≤ 0.3 mA
Voltage drop, on-state output, max	5V operation – 0.5 A 12...24V operation – 1.0 A
Current, on-state output, max	5V operation – 0.5 A 12...24V operation – 1.0 A
Current per output pair, max	5V operation – 0.9 A 12...24V operation – 4.0 A
Short circuit current	5V operation – 0.9V DC @ 0.5 A(1) 12...24V operation – 0.9V DC @ 1.0 A
Output delay time, Off to On	25 µs (load dependent)
Output delay time, On to Off	150 µs (load dependent)
Dimensions (HxWxD), approx	46 x 94 x 53 mm (1.8 x 3.7 x 3.1 in.) 94 x 94 x 69 mm (3.7 x 3.7 x 2.7 in.) installed
Temperature, operating	0...55 °C (32...131 °F)

(1) Outputs are short circuit protected and turned off until power is cycled.

Figure 18 - 1794-VHSC Derating Curve

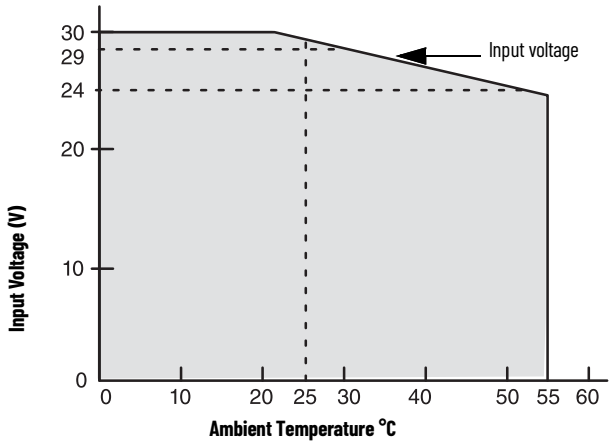

The area within the curve represents the safe operating range for the module under various conditions of user-supplied 24V DC supply voltages and ambient temperatures. This includes all possible mounting positions, including inverted horizontal.

= Safe operating area

1794-ID2 2 Input Pulse Counter Module

The 1794-ID2 module is a 2-channel counter used in applications where pulse counting is required. Typical input devices include quadrature incremental encoders with or without reference and/or gate function and pulse transmitters. You can use one or two pulse trains.

Table 39 - 2 Input Pulse Counter Module

Specification	1794-ID2
Input pulse width	Each signal condition must be stable for at least 2 ms to be recognized
Input groups	2 groups of A, B, Z, G inputs
Counting frequency, max	100 kHz
Cable type	Input: Belden 8761
Wire category	2(1)
Conductor length, max	304.8 m (1000 ft)
Input signal range	3 mA @ 6V DC 9 mA @ 12V DC 15 mA @ 24V DC
Dimensions (WxHxD), approx	46 x 94 x 53 mm (1.8 x 3.7 x 3.1 in.) 94 x 94 x 69 mm (3.7 x 3.7 x 2.7 in.) installed
Temperature, operating	0...55 °C (32...131 °F)

(1) Use this Conductor Category information for planning conductor routing. See Industrial Automation Wiring and Grounding Guidelines, publication 1770-4.1.

1794-IP4 4 Input Pulse Counter Module

The pulse counter modules perform high-speed scaling, calculation operations for various industrial applications. Some sample applications include:

- Quantity counting
- Speed calculation
- Flow monitoring

All input devices for the pulse counter module are able to provide the input signal of 6V amplitude. The 1794-IP4 has a 6V minimum threshold for an input On condition and a maximum 3V threshold for an input Off condition. The region between 3V and 6V is a transitional one and therefore requires input signals to pass cleanly through that region.

Table 40 - 4 Input Pulse Counter Module

Specification	1794-IP4
Counting frequency, max	100 kHz[1]
Input frequency, max	100
Input signal range	3 mA @ 6V DC 9 mA @ 12V DC 15 mA @ 24V DC
Overflow	Maximum period – 65 ms when 1 MHz internal clock selected Maximum period – 6.5 ms when 10 MHz internal clock selected
Dimensions (WxHxD), approx	46 x 94 x 53 mm (1.8 x 3.7 x 3.1 in.) 94 x 94 x 69 mm (3.7 x 3.7 x 2.7 in.) installed
Temperature, operating	0...55 °C (32...131 °F)

(1) Each signal condition must be stable for at least 2 ms to be recognized.

Notes:

Select a FLEX I/O Terminal Base Unit

Step 3 - Select:

the appropriate terminal base unit for your module and system

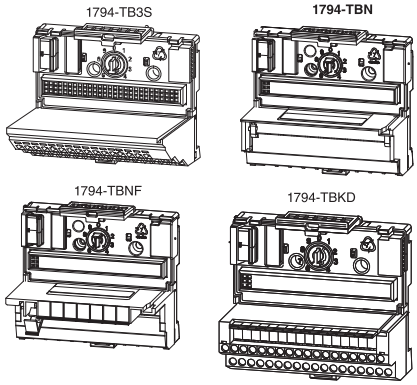

Each FLEX I/O module requires a terminal base unit that snaps onto the DIN rail to the right of the I/O adapter. The terminal bases provide terminal connection points for the I/O wiring and plug together to form the backplane. They are available with screw, clamp, or spring terminations.

Common Terminal Base Characteristics — 1794-TB3SK, 1794-TB3GSK, 1794-TB3TSK, 1794-TB3GK, 1794-TB3GS, 1794-TB32S, 1794-TB32SK, 1794-TB3, 1794-TB3K, 1794-TB3S, 1794-TB3TS, 1794-TBN, 1794-TBNF, 1794-TBNK, 1794-TB37DS, 1794-TB62DS

Current Capacity, Max	Wire Size	Dimensions (HxWxD)
10	0.34...3.3 mm^2 (22...12 AWG) solid or stranded copper wire rated at 75 °C (167 °F) or greater, 1.2 mm (3/64 in.) insulation max	94 x 94 x 69 mm (3.7 x 3.7 x 2.7 in.) **For 1794-TB37DS and 1794-TB62DS** (1) 127 x 94 x 69 mm (5.0 x 3.7 x 2.7 in)

(1) Measured with expansion module installed

Common Terminal Base Characteristics — 1794-TB3TK, 1794-TB3G, 1794-TB3GK, 1794-TB2, 1794-TB2K, 1794-TB32, 1794-TB32K

Current Capacity, Max	Wire Size	Dimensions (HxWxD)
10	0.21...1.3 mm^2 (24...16 AWG) stranded copper wire rated at 105°C (221 °F) or greater, 1.2 mm (3/64 in.) insulation max	94 x 94 x 69 mm (3.7 x 3.7 x 2.7 in.)

The following table is a comparison of general specifications for each FLEX I/O terminal base unit. For compatibility with FLEX I/O modules, see Digital I/O Module Summary on page 16.

General Specification Comparison

Catalog[1]	Termination Type	Connections	Used in Applications	Current Capacity, max	Wiring Category	Purpose	Temperature, operating
1794-TB2, 1794-TB2K	Cage clamp	16 I/O; 18 common; 2 +V	Up to 132V AC/156V DC	10	2	A generic 2-wire version of the 1794-TB3.	-20...+55 °C (-4...+131 °F)
1794-TB3, 1794-TB3K[2]		16 I/O; 18 common; 18 +V			Module dependent	Primarily intended for use with input modules when using 3-wire input proximity switches – Can also be used with output modules.	-20...+70 °C (-4...+158 °F)
1794-TB3S, 1794-TB3SK	Spring clamp					A spring clamp version of the 1794-TB3 – Provides faster, simpler wire installation.	
1794-TB32, 1794-TB32K	Cage clamp	32 I/O; 8 common; 8 +V	Up to 31.2V DC			A 32-point version of the 1794-TB3 to be used with 32-point digital modules and the 1794-IB16D module.	
1794-TB32S, 1794-TB32SK	Spring clamp					A spring clamp version of the 1794-TB32.	
1794-TB3G, 1794-TB3GK[2]	Grounded screw clamp	36 I/O; 2 common; 2 +V; 10 chassis ground				A screw clamp terminal base unit with individual grounding used with certain analog modules.	
1794-TB3GS, 1794-TB3GSK[2]	Grounded spring clamp				2	A spring clamp version of the 1794-TB3G.	
1794-TB3T, 1794-TB3TK	Cage clamp, temperature	16 I/O; 10 common; 4 +V; 8 chassis ground; 2 sets of CJC for temperature modules	Up to 132V AC/156V DC	10	Module dependent	A cage clamp terminal base to be used with the 1794-IT8 or 1794-IRT8 module (when used in thermocouple mode) – Also provides chassis ground connections for the 1794-IR8 and analog modules.	-20...+70 °C (-4...+158 °F)
1794-TB3GT	Cage clamp, grounded			V/COM terminals: 10 A I/O terminals: 2 A			
1794-TB3TS, 1794-TB3TSK[2]	Spring clamp, temperature	16 I/O; 10 common; 4 +V; 8 chassis ground; 2 sets of CJC for temperature modules	Up to 132V AC/156V DC	10	2	A spring clamp version of the 1794-TB3T.	-20...+70 °C (-4...+158 °F)
1794-TBKD[3]	Cage clamp, knife disconnect	16 I/O; 18 common; 2 +V	—	—	Module dependent	A cage clamp terminal base with 16 knife disconnects.	0...55 °C (32...131 °F)
1794-TBN, 1794-TBNK[2]	Screw clamp, NEMA-style	16 I/O; 2 common; 2 +V	264V AC/DC	—		A NEMA-style screw clamp terminal base for larger gauge wires with a cover for I/O wiring.	-20...+70 °C (-4...+158 °F)
1794-TBNF, 1794-TBNFK	Screw clamp, fused NEMA-style			—		Provides eight 5 x 20 mm fused, screw terminals with a cover for I/O wiring – Shipped with fuses for the 1794-OA8 module; can be used to fuse the 1794-OM8 and 1794-OW8 modules with a replacement fuse.[4]	-20...+55 °C (-4...+131 °F)
1794-TB37DS	D-shell	37 Pin; Digital and analog	—	—	Module dependent	A 37-pin D-shell termination for both digital and analog modules.	0...55 °C (32...131 °F)
1794-TB62DS		62 Point; Digital and analog	—	—	—	A 62-pin D-shell termination for both digital and analog modules.	

(1) Isolation voltage, channel to channel, is determined by the insert module. Use this conductor category information for planning conductor routing. See Industrial Automation Wiring and Grounding Guidelines, publication 1770-4.1.
(2) The letter K in the last position of the catalog number, before the series designation, indicates a conformal coated versions of standard modules and can be used with extended temperature modules (modules ending in -XT).
(3) Discontinued catalogs may not have updated specifications. For more information about a specific discontinued catalog, see the individual installation instructions.
(4) Contains eight 5 x 20 mm fuses (one for each even-numbered terminal – 0...14 on row B). Shipped with 1.6 A, 250V AC Slow Blow fuse suitable for the 1794-OA8 AC output module. See individual installation instructions for fusing recommendations for other modules. Littelfuse PN23901.6 Allen-Bradley PN94171304, SAN-O PNSD6-1.6A.

Select a FLEX I/O Power Supply

Step 4 – Select:

If power consumption exceeds the maximum for a single power supply, install additional power supplies.

FLEX I/O modules are interfaced to the I/O link through a FLEX I/O adapter module with a built-in 24V DC input power supply. The FLEX I/O modules receive power from the adapter/power supply through the backplane. The 120V AC to 24V DC power supply (1794-PS13, 1794-PS13K, 1794-PS3, or 1794-PS3K) is also available for powering the adapter/power supply.

General Specification Comparison

Catalog	Power Supply Input Voltage, Nom	Power Supply Input Power	Apparent Input Power, Max	Transformer Load, Max	Output Current, Max	Output Voltage, Nom	Dimensions (HxWxD), Approx
1794-PS3 1794-PS3K	120V/220V AC	86 W	205 VA	250 VA	3.0 A	24V DC	87 x 94 x 69 mm (3.4 x 3.7 x 2.7 in.)
1794-PS13 1794-PS13K		36 W	53 VA	90 VA	1.3 A		87 x 69 x 69 mm (3.4 x 2.7 x 2.7 in.)

Power Supply Definitions

Module Supply Voltage — This is typically either 120V AC or 24V DC nominal voltage that is supplied from an external power source wired to the module terminal base unit.

All FLEX I/O adapters provide internal power to the maximum possible number of 8 FLEX I/O modules. Power supply modules are required to provide 24V to the adapters.

The 1794-PS13 and 1794-PS13K power supply is capable of supplying a maximum of 1.3 A at 24V DC. The output surge current is sufficient to drive four adapters with a surge of 23 A for 2 ms each operating at 24V DC.

The 1794-PS3 and 1794-PS3K power supply is capable of supplying a maximum of 3 A[(a)] at 24V DC. The output surge current is sufficient to drive six adapters with a surge of 23 A for 2 ms each operating at 24V DC.

Non-Allen-Bradley DC power supplies can also be used, but should operate within the specifications for the devices they are powering. Size the power supply by calculating the total current consumed by summing the currents for each of the modules used for the power supply operating voltage applied.

The 1606 switched mode power supplies are capable of supplying a maximum of up to 40 A at 24V DC and can be used as an alternative when more power is needed.

Digital Input Modules require supplied 24V DC (19.2...31.2V DC) and consume the currents listed in the module specifications.

Digital Output Modules require supplied 24V DC (19.2...31.2V DC) and consume the currents listed in the module specifications plus the total current consumed by their loads. The load current is limited by the maximum load current and surge listed.

Combination Digital Modules have a combination of inputs and outputs. The current load should be determined as described for the combined input and output specifications listed.

Analog Input Modules require supplied 24V DC (19.2...31.2V DC) and consume the currents listed in the module specifications. In addition, adequate power must be supplied to the 1794-IE8 and 1794-IF4I transmitters to deliver input terminal voltage or drive 20 mA into the input impedance listed. This power source may be the same as the module power and can be included in the power supply calculated.

Analog Output Modules require supplied 24V DC (19.2...31.2V DC) and consume the currents listed plus the total current consumed by their loads. The load current is limited by maximum current or resistive load permitted per channel.

(a) This refers to horizontal mounting: 2.8 A maximum for all other mountings. See the derating curve in the installation instructions for that module.

Combination Analog Modules have a combination of analog inputs and outputs. The current load should be determined as described previously for the combined modules and output specifications listed. The output load current is limited by the maximum current or resistive load permitted per channel. In addition, adequate power must be supplied to the 1794-IE8 and 1794-IF4I transmitters to deliver input terminal voltage or drive 20 mA into the input impedance listed. This power source may be the same as the module power and can be included in the power supply calculation.

Counter Modules require module power, transmitter input power, and in some cases output load power. If output load power is required, use a separate power supply for output load power for noise immunity.

Power Requirements and Transformer Sizing

- Use the real power value in watts for determining the amount of heat dissipation you will have inside the enclosure.
- Use the apparent power value in VA for estimated power distribution sizing.
- Use the transformer load value in VA of each power supply plus all other loads on a transformer to determine the required transformer size.

1794-PS3 and 1794-PS3K AC/DC

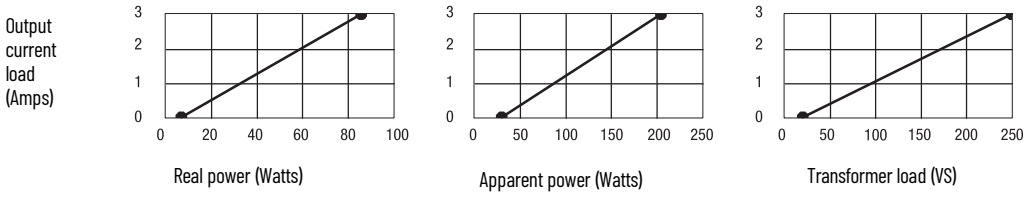

1794-PS13 and 1794-PS13K AC/DC

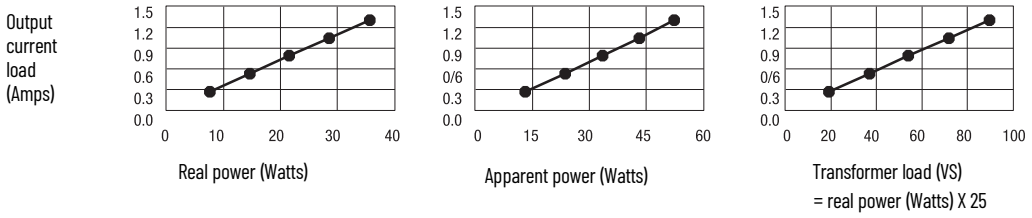

Select Optional Accessories

Step 5 – Select:

Optional accessories for FLEX I/O and FLEX I/O-XT modules

1794-CE1 and 1794-CE3 Extender Cables

Use one optional 1794-CE1 – 0.3 m (1 ft) or 1794-CE3 – 0.9 m (3 ft) extender cable, per system, to arrange your system in two rows or split your system into horizontal and vertical orientation. The cable can be used between any module or between adapters and modules.

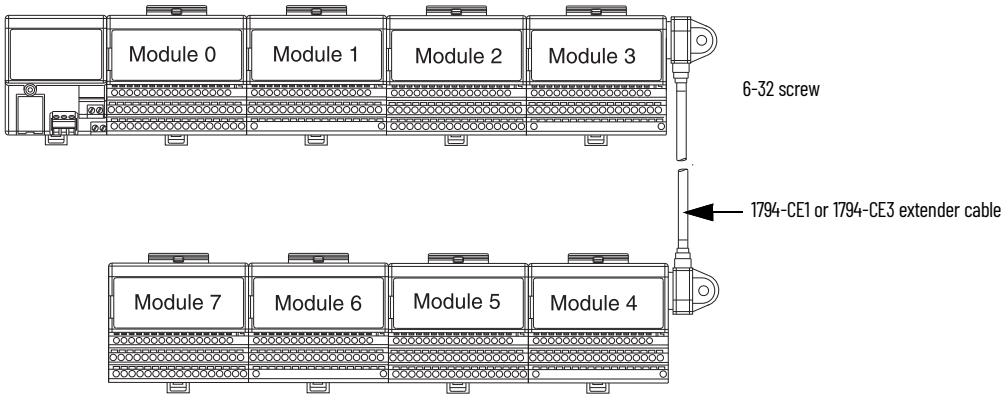

1794-NM1 FLEX I/O Mounting Kit

Use the optional 1794-NM1 FLEX I/O mounting kit to mount your FLEX I/O system on a panel without a DIN rail.

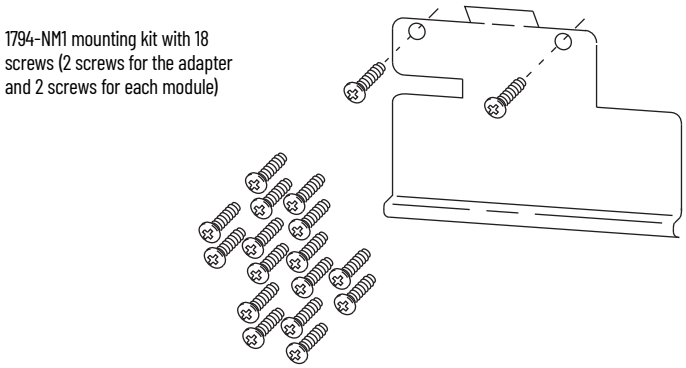

1492-EA35 DIN Rail Locks

When you use FLEX I/O modules in a high-vibration installation, and particularly when mounting the modules vertically, we recommend using DIN rail locks (Allen-Bradley part number 1492-EA35).

1794-LBL FLEX I/O Label Kit

Use the label kit to tailor the label on your FLEX I/O terminal base unit to meet your needs. The label kit includes a die-cut drawing and label sheet with five labels.

1794-N2 FLEX I/O Dummy Filler Module

This module is used to fill in an otherwise empty slot: a terminal base with no I/O module. It contains no electronics.

1794-CJC2

This Cold Junction Compensation kit contains two replacements for the CJCs supplied with 1794-IT8 and 1794-IRT8 modules.

Mount the FLEX System

Step 6 – Select:

- *Panel mount or DIN rail mount*
- *Appropriate number of panels or DIN rails based on the number of modules and the physical requirements*
- *One end cap per controller system*

You can horizontally or vertically mount the FLEX I/O system on a standard 35 mm DIN rail. The adapter and terminal base unit easily snap on the DIN rail by hand. Use a flat-blade screwdriver to remove components from the DIN rail.

Screw holes allow you to horizontally or vertically panel-mount your system in an enclosure. Maintain at least 25 mm (1 in.) of air space around your FLEX system.

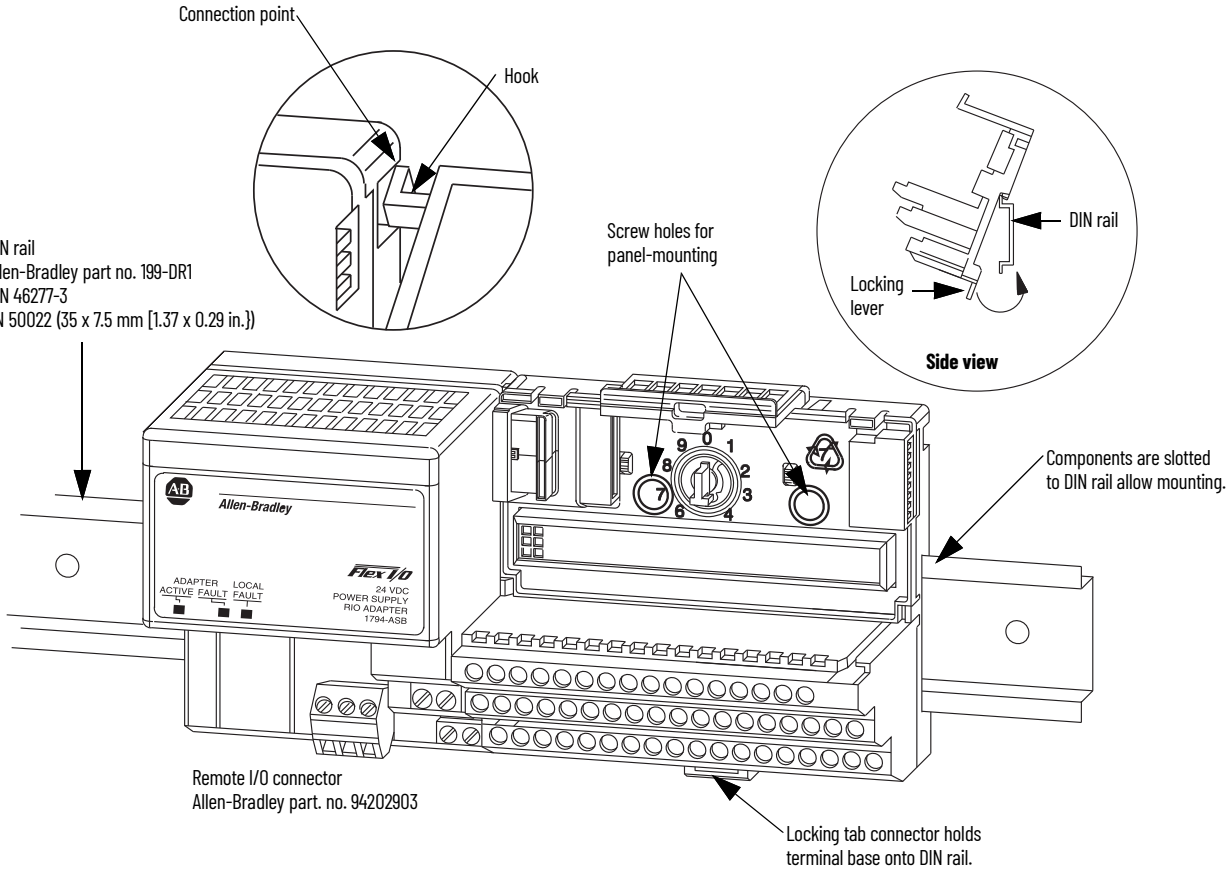

When properly installed, FLEX I/O are grounded through the DIN rail to chassis ground. Use a zinc-plated, yellow-chromated steel DIN rail to assure proper grounding. Using other DIN rail materials, for example, aluminum or plastic, which can corrode, oxidize, or are poor conductors can result in improper or intermittent platform grounding.

If installing FLEX on non-recommended DIN rail materials, use the mounting holes provided with each terminal base, or use a 1794-NM1 mounting kit with an approved mounting bracket. Use mounting screws with star washers to provide the FLEX platform with a chassis ground connection that is not likely to be affected by shock, vibration, or oxidation over time.

The hook (on the terminal base unit) and adjacent connection point (on the communication adapter) keep the terminal base units tight together. These components are capable of maintaining a reliable connection in case of shock and/or vibration. See the environmental specifications section for each module.

Notes:

Additional Resources

These documents contain additional information concerning related products from Rockwell Automation.

1794 FLEX I/O and FLEX IO-XT Related Publications

Module Type	Catalog Number	Installation Instructions	User Manual
Adapter	1794-AENT	FLEX I/O EtherNet/IP Adapters Installation Instructions, publication 1794-IN082	
	1794-AENTR	FLEX I/O Dual Port EtherNet/IP Adapter Modules Installation Instructions, publication 1794-IN131	FLEX I/O Dual-port EtherNet/IP Adapters User Manual, publication 1794-UM066
	1794-AENTRXT		
	1794-ACN15	FLEX I/O ControlNet Adapters Installation Instructions, publication 1794-IN128	
	1794-ACN15K[1]		
	1794-ACNR15		
	1794-ACNR15XT		
	1794-ADN	FLEX I/O DeviceNet Adapter Module Installation Instructions, publication 1794-IN099	
	1794-ADNK		
	1794-ASB2[1]	FLEX I/O Remote I/O Adapter Modules Installation Instructions, publication 1794-IN098	
	1794-ASB2K		
	1794-ASB[1]		Remote I/O Adapter Module User Manual, publication 1794-UM009
	1794-ASBLT[1]	FLEX I/O Remote I/O Adapter Module Installation Instructions, publication 1794-IN110	—
Terminal Base	1794-TB2	FLEX I/O Terminal Base Units Installation Instructions, publication 1794-IN092	—
	1794-TB2K		
	1794-TB3		
	1794-TB3K		
	1794-TB3S		
	1794-TB3SK		
	1794-TB32		
	1794-TB32K		
	1794-TB32S		
	1794-TB32SK		
	1794-TB3T		
	1794-TB3TK		
	1794-TB3TS		
	1794-TB3TSK		
	1794-TB3G		
	1794-TB3GK		
	1794-TB3GS		
	1794-TB3GSK		
	1794-TBKD[1]		
	1794-TBN		
	1794-TBNK		
	1794-TBNF		
	1794-TB3GT	FLEX I/O Grounded Cage Clamp Temperature Terminal Base Unit Installation Instructions, publication 1794-IN133	—
	1794-TB62DS	FLEX I/O D-Shell Terminal Base Units and Distribution Boards Installation Instructions, publication 1794-IN107	—
	1794-TB37DS		
	1794-TB62EXD4X15[1]		
	1794-TB37EXD4CM8[1]		
	1794-TB37EXD4VM8[1]		
	1203-FB1	FLEX I/O SCANport™ Terminal Base Installation Instructions, publication 1203-UM000	

1794 FLEX I/O and FLEX IO-XT Related Publications (Continued)

Module Type	Catalog Number	Installation Instructions	User Manual
AC	1794-IA8	FLEX I/O AC Digital Input Modules Installation Instructions, publication 1794-IN102	—
	1794-IA8I		
	1794-IA16		
	1794-IM8	FLEX I/O 220V AC Digital Input and Output Modules Installation Instructions, publication 1794-IN104	
	1794-IM16	FLEX I/O 240V AC Digital Input and Output Modules Installation Instructions, publication 1794-IN123	
	1794-OA8	FLEX I/O AC Digital Output Modules Installation Instructions, publication, 1794-IN103	
	1794-OA8I		
	1794-OA16		
	1794-OM8	FLEX I/O 220V AC Digital Input and Output Modules Installation Instructions, publication 1794-IN104	
	1794-OM16	FLEX I/O 240V AC Digital Input and Output Modules Installation Instructions, publication 1794-IN123	
DC	1794-IB8	FLEX I/O Digital Input Modules Installation Instructions, publication 1794-IN093	
	1794-IB16		
	1794-IB16D	FLEX I/O Digital Input and Output Modules with Diagnostics Installation Instructions, publication 1794-IN096	FLEX I/O Diagnostic Modules User Manual, publication 1794-UM061
	1794-IB16XT	FLEX I/O-XT Digital DC Input/Output Modules Installation Instructions, publication 1794-IN124	
	1794-IB10XOB6XT		
	1794-IB10XOB6	FLEX I/O Digital Input and Output Modules Installation Instructions, publication 1794-IN083	
	1794-IB16XOB16P		
	1794-IC16	FLEX I/O 48V DC Digital Input and Output Modules Installation Instructions, publication 1794-IN105	
	1794-IG16	FLEX I/O 5V DC TTL Digital Input and Output Modules Installation Instructions, publication 1794-IN119	
	1794-IH16	FLEX I/O 125V DC Digital Input Module Installation Instructions, publication 1794-IN118	
	1794-IV16	FLEX I/O Digital Sourcing Input and Sinking Output Modules Installation Instructions, publication 1794-IN095	
	1794-IB32	FLEX I/O Digital Input Modules Installation Instructions, publication 1794-IN093	
	1794-IV32	FLEX I/O Digital Sourcing Input and Sinking Output Modules Installation Instructions, publication 1794-IN122	
	1794-OB8	FLEX I/O Digital DC Output Modules Installation Instructions, publication 1794-IN094	
	1794-OB8EP		
	1794-OB8EPXT	FLEX I/O-XT Digital DC Input/Output Modules Installation Instructions, publication 1794-IN124	
	1794-OB16	FLEX I/O Digital DC Output Modules Installation Instructions, publication 1794-IN094	
	1794-OB16P		
	1794-OB16D	FLEX I/O Digital Input and Output Modules with Diagnostics Installation Instructions, publication 1794-IN096	FLEX I/O Diagnostic Modules User Manual, publication 1794-UM061
	1794-OB16PXT	FLEX I/O-XT Digital DC Input/Output Modules Installation Instructions, publication 1794-IN124	
	1794-OB32P	FLEX I/O Digital DC Output Modules Installation Instructions, publication 1794-IN094	
	1794-OC16	FLEX I/O 48V DC Digital Input and Output Modules Installation Instructions, publication 1794-IN105	
	1794-OG16	FLEX I/O 5V DC TTL Digital Input and Output Modules Installation Instructions, publication 1794-IN119	
	1794-OV16	FLEX I/O Digital Sourcing Input and Sinking Output Modules Installation Instructions, publication 1794-IN095	
	1794-OV16P		
	1794-OV32	FLEX I/O Digital Sourcing Input and Sinking Output Modules Installation Instructions, publication 1794-IN122	
Relay	1794-OW8	FLEX I/O 8 Relay Output Modules Installation Instructions, publication 1794-IN019	
	1794-OW8XT		

1794 FLEX I/O and FLEX IO-XT Related Publications (Continued)

Module Type	Catalog Number	Installation Instructions	User Manual
Analog	1794-IE8	FLEX I/O Input, Output, and Input/Output Analog Modules Installation Instructions, publication 1794-IN100	FLEX I/O High-Density Analog Modules User Manual, publication 1794-UM062
	1794-IE8XT	FLEX I/O Input, Output, and Input/Output Analog Modules Installation Instructions, publication 1794-IN125	
	1794-IE12	FLEX I/O DC Input, Output, and Input/Output Analog Modules Installation Instructions, publication 1794-IN106	
	1794-IE8H	FLEX I/O 8 Input HART Analog Module Installation Instructions, publication 1794-IN108	FLEX I/O HART Analog Modules User Manual, publication 1794-UM063
	1794-OE4	FLEX I/O Input, Output, and Input/Output Analog Modules Installation Instructions, publication 1794-IN100	FLEX I/O High-Density Analog Modules User Manual, publication 1794-UM062
	1794-OE4XT	FLEX I/O Input, Output, and Input/Output Analog Modules Installation Instructions, publication 1794-IN125	
	1794-OE8H	FLEX I/O 8 Output HART Analog Module Installation Instructions, publication 1794-IN109	FLEX I/O HART Analog Modules User Manual, publication 1794-UM063
	1794-OE12	FLEX I/O DC Input, Output, and Input/Output Analog Modules Installation Instructions, publication 1794-IN106	FLEX I/O High-Density Analog Modules User Manual, publication 1794-UM062
	1794-IE4XOE2	FLEX I/O Input, Output, and Input/Output Analog Modules Installation Instructions, publication 1794-IN100	
	1794-IE4XOE2XT	FLEX I/O Input, Output, and Input/Output Analog Modules, publication 1794-IN125	
	1794-IE8XOE4	FLEX I/O DC Input, Output, and Input/Output Analog Modules Installation Instructions, publication 1794-IN106	
Isolated Analog	1794-IF4I	FLEX I/O Isolated Analog Input Module Installation Instructions, publication 1794-IN038	FLEX I/O Isolated Analog Modules User Manual, publication 1794-UM008
	1794-IF4IXT	FLEX I/O-XT Isolated Analog Input and Output Modules Installation Instructions, publication 1794-IN129	
	1794-IF4ICFXT	FLEX I/O-XT Isolated Analog Input Module Installation Instructions, publication 1794-IN130	
	1794-IF8IH	FLEX I/O Isolated Input HART Analog Module Installation Instructions, publication 1794-IN115	FLEX I/O Isolated Input/Output HART Analog Modules User Manual, publication 1794-UM065
	1794-IF8IHNFXT	FLEX I/O-XT 8-Input Channel Isolated HART Analog Module Installation Instructions, publication 1794-IN134	
	1794-OF4I	FLEX I/O Isolated Analog Output Module Installation Instructions, publication 1794-IN037	FLEX I/O Isolated Analog Modules User Manual, publication 1794-UM008
	1794-OF4IXT	FLEX I/O-XT Isolated Analog Input and Output Modules Installation Instructions, publication 1794-IN129	
	1794-OF8IH	FLEX I/O Isolated Output HART Analog Module Installation Instructions, publication 1794-IN120	FLEX I/O Isolated Input/Output HART Analog Modules User Manual, publication 1794-UM065
	1794-IF2XOF2I	FLEX I/O Isolated Analog Input/Output Module Installation Instructions, publication 1794-IN039	FLEX I/O Isolated Analog Modules User Manual, publication 1794-UM008
	1794-IF2XOF2IXT	FLEX I/O-XT Isolated Analog Input and Output Modules Installation Instructions, publication 1794-IN129	
Specialty	1794-IR8	FLEX I/O Thermocouple/mV Input Module and RTD Input Module Installation Instructions, publication 1794-IN021	8 Input RTD Module User Manual, publication 1794-UM004
	1794-IRT8	FLEX I/O Thermocouple/RTD Input Analog Module Installation Instructions, publication 1794-IN050	FLEX I/O Thermocouple/RTD/Millivolt Input Module User Manual, publication 1794-UM012
	1794-IRT8K		
	1794-IRT8XT		
	1794-IT8	FLEX I/O Thermocouple/mV Input Module and RTD Input Module Installation Instructions, publication 1794-IN021	Thermocouple/Millivolt Input Module User Manual, publication 1794-UM007
Counter	1794-IJ2	FLEX I/O 2-input Frequency Modules Installation Instructions, publication 1794-IN049	FLEX I/O Frequency Input Module User Manual, publication 1794-UM011
	1794-IJ2K		
	1794-IJ2XT		
	1794-VHSC	FLEX I/O Very High-speed Counter Module Installation Instructions, publication 1794-IN067	FLEX I/O Very High-speed Counter Module User Manual, publication 1794-UM010
	1794-ID2	FLEX I/O 2-Channel Incremental Encoder Module Installation Instructions, publication 1794-IN063	FLEX I/O 2 Input Incremental Encoder Module User Manual, publication 1794-UM015
	1794-IP4	FLEX I/O 4-Channel Pulse Counter Module Installation Instructions, publication 1794-IN064	FLEX I/O 4 Channel Pulse Counter Module User Manual, publication 1794-UM016

1794 FLEX I/O and FLEX IO-XT Related Publications (Continued)

Module Type	Catalog Number	Installation Instructions	User Manual
Power Supply	1794-PS3	FLEX I/O Power Supply Modules Installation Instructions, publication 1794-IN069	—
	1794-PS13		
Accessories	1794-CE1	Interconnect Cable Installation Instructions, publication 1794-IN012	—
	1794-CE3		

(1) Discontinued catalogs may not have updated specifications. For more information about a specific discontinued catalog, see individual installation instructions.

General Related Publications

Resource	Description
EtherNet/IP Network Devices User Manual, publication ENET-UM006	Describes how to configure and use EtherNet/IP devices to communicate on the EtherNet/IP network.
Ethernet Reference Manual, publication ENET-RM002	Describes basic Ethernet concepts, infrastructure components, and infrastructure features.
System Security Design Guidelines Reference Manual, publication SECURE-RM001	Provides guidance on how to conduct security assessments, implement Rockwell Automation products in a secure system, harden the control system, manage user access, and dispose of equipment.
Industrial Components Preventive Maintenance, Enclosures, and Contact Ratings Specifications, publication IC-TD002	Provides a quick reference tool for Allen-Bradley industrial automation controls and assemblies.
Safety Guidelines for the Application, Installation, and Maintenance of Solid-state Control, publication SGI-1.1	Designed to harmonize with NEMA Standards Publication No. ICS 1.1-1987 and provides general guidelines for the application, installation, and maintenance of solid-state control in the form of individual devices or packaged assemblies incorporating solid-state components.
Industrial Automation Wiring and Grounding Guidelines, publication 1770-4.1	Provides general guidelines for installing a Rockwell Automation industrial system.
Product Certifications website, rok.auto/certifications	Provides declarations of conformity, certificates, and other certification details.

You can view or download publications at rok.auto/literature.

Notes:

Rockwell Automation Support

Use these resources to access support information.

Technical Support Center	Find help with how-to videos, FAQs, chat, user forums, Knowledgebase, and product notification updates.	rok.auto/support
Local Technical Support Phone Numbers	Locate the telephone number for your country.	rok.auto/phonesupport
Technical Documentation Center	Quickly access and download technical specifications, installation instructions, and user manuals.	rok.auto/techdocs
Literature Library	Find installation instructions, manuals, brochures, and technical data publications.	rok.auto/literature
Product Compatibility and Download Center (PCDC)	Download firmware, associated files (such as AOP, EDS, and DTM), and access product release notes.	rok.auto/pcdc

Documentation Feedback

Your comments help us serve your documentation needs better. If you have any suggestions on how to improve our content, complete the form at rok.auto/docfeedback.

Allen-Bradley, ArmorBlock, CompactLogix, ControlLogix, DeviceNetManager, expanding human possibility, FactoryTalk, FLEX, FLEX I/O-XT, Integrated Architecture, PanelView, PartnerNetwork, POINT I/O, PowerFlex, Rockwell Automation, SCANport, Stratix, and TechConnect are trademarks of Rockwell Automation, Inc.

CIP, ControlNet, DeviceNet, and EtherNet/IP are trademarks of ODVA, Inc.

Trademarks not belonging to Rockwell Automation are property of their respective companies.

Rockwell Automation maintains current product environmental compliance information on its website at rok.auto/pec.

Rockwell Otomasyon Ticaret A.Ş. Kar Plaza İş Merkezi E Blok Kat:6 34752, İçerenköy, İstanbul, Tel: +90 (216) 5698400 EEE Yönetmeliğine Uygundur

Connect with us.

rockwellautomation.com — expanding **human possibility**®

AMERICAS: Rockwell Automation, 1201 South Second Street, Milwaukee, WI 53204-2496 USA, Tel: (1) 414.382.2000
EUROPE/MIDDLE EAST/AFRICA: Rockwell Automation NV, Pegasus Park, De Kleetlaan 12a, 1831 Diegem, Belgium, Tel: (32) 2663 0600
ASIA PACIFIC: Rockwell Automation SEA Pte Ltd, 2 Corporation Road, #04-05, Main Lobby, Corporation Place, Singapore 618494, Tel: (65) 6510 6608
UNITED KINGDOM: Rockwell Automation Ltd., Pitfield, Kiln Farm, Milton Keynes, MK11 3DR, United Kingdom, Tel: (44)(1908) 838-800

Publication 1794-SG002I-EN-P - April 2024
Supersedes Publication 1794-SG002H-EN-P - November 2021

Copyright © 2024 Rockwell Automation, Inc. All rights reserved.