User Manual

Allen-Bradley

PowerFlex 700S High Performance AC Drive Phase I Control

Firmware Versions1.xx-2.07

Allen-Bradley • Rockwell Software

Rockwell Automation

Important User Information

Read this document and the documents listed in the additional resources section about installation, configuration, and operation of this equipment before you install, configure, operate, or maintain this product. Users are required to familiarize themselves with installation and wiring instructions in addition to requirements of all applicable codes, laws, and standards.

Activities including installation, adjustments, putting into service, use, assembly, disassembly, and maintenance are required to be carried out by suitably trained personnel in accordance with applicable code of practice.

If this equipment is used in a manner not specified by the manufacturer, the protection provided by the equipment may be impaired.

In no event will Rockwell Automation, Inc. be responsible or liable for indirect or consequential damages resulting from the use or application of this equipment.

The examples and diagrams in this manual are included solely for illustrative purposes. Because of the many variables and requirements associated with any particular installation, Rockwell Automation, Inc. cannot assume responsibility or liability for actual use based on the examples and diagrams.

No patent liability is assumed by Rockwell Automation, Inc. with respect to use of information, circuits, equipment, or software described in this manual.

Reproduction of the contents of this manual, in whole or in part, without written permission of Rockwell Automation, Inc., is prohibited.

Throughout this manual, when necessary, we use notes to make you aware of safety considerations.

	WARNING: Identifies information about practices or circumstances that can cause an explosion in a hazardous environment, which may lead to personal injury or death, property damage, or economic loss.
	ATTENTION: Identifies information about practices or circumstances that can lead to personal injury or death, property damage, or economic loss. Attentions help you identify a hazard, avoid a hazard, and recognize the consequence.
IMPORTANT	Identifies information that is critical for successful application and understanding of the product.

Labels may also be on or inside the equipment to provide specific precautions.

	SHOCK HAZARD: Labels may be on or inside the equipment, for example, a drive or motor, to alert people that dangerous voltage may be present.
	BURN HAZARD: Labels may be on or inside the equipment, for example, a drive or motor, to alert people that surfaces may reach dangerous temperatures.
	ARC FLASH HAZARD: Labels may be on or inside the equipment, for example, a motor control center, to alert people to potential Arc Flash. Arc Flash will cause severe injury or death. Wear proper Personal Protective Equipment (PPE). Follow ALL Regulatory requirements for safe work practices and for Personal Protective Equipment (PPE).

Allen-Bradley, DriveLogix, DriveTools SP, PowerFlex, Rockwell Software, Rockwell Automation, and SynchLink are trademarks of Rockwell Automation, Inc.

Trademarks not belonging to Rockwell Automation are property of their respective companies.

This manual contains new and updated information.

New and Updated Information

This table contains the changes made to this revision.

Topic	Page
Updated the front and inside front covers.	–
Updated the Electronic Motor Overload Protection statement.	A-3
Updated the Drive Fusing and Circuit Breaker information and Protection Device tables.	A-6…A-16
Updated the back cover.	–

Notes:

Important User Information 1-2

Summary of Changes

Manual Updates i-1

Preface

Overview

Who Should Use This Manual P-1
What Is Not In This Manual P-1
Recommended Documentation P-2
Manual Conventions P-3
Drive Frame Sizes P-3
General Precautions P-4
Class 1 LED Product P-4
Catalog Number Explanation P-5

Chapter 1 Installation/Wiring

Chapter Objectives 1-1
Opening the Cover 1-2
Mounting Clearances 1-2
Operating Temperatures 1-3
AC Supply Source Considerations 1-3
Unbalanced or Ungrounded Distribution Systems 1-3
Input Power Conditioning 1-4
Grounding Requirements 1-4
Recommended Grounding Scheme 1-4
Shield Termination - SHLD 1-5
RFI Filter Grounding 1-5
Fuses and Circuit Breakers 1-5
Power Wiring 1-6
Power Cable Types Acceptable for 200-600 Volt Installations 1-6
Motor Cable Lengths 1-8
Power Terminal Block 1-8
Cable Entry Plate Removal 1-8
Power Wiring Access Panel Removal 1-8
Access Panel Removal 1-8
Replace the cover when wiring is complete.
AC Input Phase Selection (Frames 5 & 6 Only) 1-9
Cooling Fan Voltage 1-9
Selecting/Verifying Fan Voltage (Frames 5 & 6 Only) 1-9
Dynamic Brake Resistor Considerations 1-14
Using Input/Output Contactors 1-15
Using PowerFlex 700S Drives with Regenerative Power Units 1-15
Regenerative Unit to Drive Connections 1-16
Disconnecting MOVs and Common Mode Capacitors 1-16
I/O Wiring 1-19
Wiring the Main Control Board I/O Terminals 1-20
Auxiliary Power Supply 1-20
Hard Enable Circuitry 1-21
Main Control Board I/O Configuration Settings 1-32
Connecting SynchLink 1-33
Class 1 LED Product 1-33
CE Conformity 1-35
Low Voltage Directive (73/23/EEC) 1-35
EMC Directive (89/336/EEC) 1-35
General Notes 1-35
Essential Requirements for CE Compliance 1-36

Chapter 2 Start-Up

Prepare for Drive Start-Up 2-1
Before Applying Power to the Drive 2-1
Applying Power to the Drive 2-2
Assisted Start-Up 2-3

Chapter 3 Programming and Parameters

About Parameters 3-1
How Parameters are Organized 3-3
Parameter Data in Linear List Format 3-16
Parameter Cross Reference By Name 3-96

Chapter 4 Troubleshooting

Chapter Objectives 4-1
Faults and Alarms 4-1
Drive Status 4-1
LED Indications 4-2
Precharge Board LED Indications 4-3
HIM Indication 4-4
Manually Clearing Faults 4-4
Fault Descriptions 4-4

Appendix A Supplemental Information

Chapter Objectives A-1
Specifications A-1
DPI Communication Configurations A-4
Typical Programmable Controller Configurations A-4
Logic Command Word A-5
Logic Status Word A-6
Output Devices A-6
Drive, Fuse & Circuit Breaker Ratings A-6
Fuse Size A-6
Fuse Type A-7
AC input Protection Devices A-8
List of Motors with Compatible Thermistor Ratings A-17
Spare Connectors A-18
Main Control Board A-18
High Resolution Encoder Interface Board A-18
Resolver Interface Board A-18
Dimensions A-19

Appendix B Control Block Diagrams

List of Control Block Diagrams B-1

Appendix C Application Notes

Input Voltage Range/Tolerance C-1
Motor Control Mode C-2
Field Oriented Control C-2
Permanent Magnet Control C-3
Motor Overload C-3
Mtr I2T Spd Min C-3
Overspeed Limit C-4
Stop Dwell Time C-5
Setpt 1 Data C-6
Setpt 2 Data C-6

Appendix D **HIM Overview**
External and Internal Connections D-1
LCD Display Elements D-2
ALT Functions D-2
Removing/Installing the HIM D-3

Appendix E **PowerFlex 700S Stegmann Hi-Resolution Encoder Feedback Option**
Chapter Objectives E-1
Specifications E-1
Stegmann Hi-Resolution Feedback Option Card Specifications E-1
Supported Encoders E-1
Wiring the Stegmann Hi-Resolution Feedback Option Card to an Encoder E-2
Recommended Cables E-3

Appendix F **PowerFlex 700S Resolver Feedback Option Card**
Chapter Objectives F-1
Specifications F-1
Resolver Feedback Option Card Specifications F-1
Compatible Resolvers F-1

Appendix G **Access Procedures**
Using this Appendix G-1
Removing Cover(s) G-1
Replacing Cover(s) G-2

Appendix H **PowerFlex 700S Multi-Device Interface Option Card**
Specifications H-1
MDI Option Card Specifications H-1
Supported Linear Sensors H-1
Supported Rotary Encoders H-2
Recommended Cables H-2
Wiring the MDI Option Card H-3

Appendix I **PowerFlex 700S Permanent Magnet Motor Specifications**
Compatible Permanent Magnet Motors I-1

Index

Overview

The purpose of this manual is to provide you with the basic information needed to install, start-up and troubleshoot the PowerFlex® 700S Adjustable Frequency AC Drive, Frames 1-6. Refer to PFLEX-IN006 for information on installing, starting and troubleshooting the PowerFlex 700S and 700H Adjustable Frequency Drives for Frames 9 - 11.

For information on ...	See page...
Who Should Use This Manual	Preface-1
What Is Not In This Manual	Preface-1
Recommended Documentation	Preface-2
Manual Conventions	Preface-3
Drive Frame Sizes	Preface-3
General Precautions	Preface-4
Catalog Number Explanation	Preface-5

Who Should Use This Manual

This manual is intended for qualified personnel. You must be able to program and operate Adjustable Frequency AC Drive devices. In addition, you must have an understanding of the parameter settings and functions. You must also understand programmable controllers for the PowerFlex 700S with DriveLogix.

What Is Not In This Manual

Since this *User Manual* is designed to provide only basic start-up information for Frames 1 - 6, the following topics have not been included:

- Spare parts information
- Installation instructions for frames 9 - 11

For detailed drive information, please refer to publication *PowerFlex 700S with Phase I Control Reference Manual*, publication PFLEX-RM002. This publication is available online at:

www.rockwellautomation.com/literature

Recommended Documentation

The following publications provide general drive information.

Title	Publication	Available...
Wiring and Grounding for PWM AC Drives	DRIVES-IN001	www.rockwellautomation.com/literature
Safety Guidelines for the Application, Installation and Maintenance of Solid State Control	SGI-1.1	
A Global Reference Guide for Reading Schematic Diagrams	100-2.10	
Guarding Against Electrostatic Damage	8000-4.5.2	

The following publications provide specific PowerFlex drive information.

Title	Publication	Available...
Installation Instructions - Hi-Resolution Encoder Feedback Option for PowerFlex 700S Drives	20D-IN001	www.rockwellautomation.com/literature
Installation Instructions - Resolver Feedback Option for PowerFlex 700S Drives	20D-IN002	
Firmware Release Notes - PowerFlex 700S Drive (firmware revision 2.06 & 2.07)	20D-RN0016	

For detailed PowerFlex 700S information:

Title	Publication	Available...
PowerFlex Reference Manual	PFLEX-RM002	www.rockwellautomation.com/literature
PowerFlex 700S and 700H Adjustable Frequency Drives for Frames 9 - 11	PFLEX-IN006	

For Allen-Bradley Drives Technical Support:

Title	Online at...
Allen-Bradley Drives Technical Support	www.ab.com/support/abdrives

For Automation and Control Technical Support:

Title	Online at...
Rockwell Automation Technical Support	http://support.rockwellautomation.com/knowledgebase

The following publications provide necessary information when applying the DriveLogix Controller.

Title	Publication	Available...
DriveLogix Controller User Manual	20D-UM002	www.rockwellautomation.com/literature
Firmware Release Notes - DriveLogix Controller (firmware revision 10.15)	20D-RN001	
Firmware Release Notes - DriveLogix Controller (firmware revision 10.16)	20D-RN002	
Firmware Release Notes - DriveLogix Controller (firmware revision 11.14)	20D-RN003	
Logix5000 Controllers Common Procedures	1756-PM001	

Title	Publication	Available...
Installation Instructions - DriveLogix Controller for PowerFlex 700S Drives	20D-IN003	www.rockwellautomation.com/literature
Logix5000 Controllers General Instructions	1756-RM003	
ControlNet Daughtercard Installation Instructions	1788-IN002	
ControlNet Daughtercard Installation Instructions	1788-IN005	
Logix5000 Controllers Process Control and Drives Instructions	1756-RM006	
RSLogix 5000 Getting Results	9399-RLD300 GR	
RSNetworx for ControlNet Getting Results	9398-CNETGR	
RSLinx Getting Results Guide	9399-LINXGR	

The following publications provide information that is useful when planning and installing communication networks.

Title	Publication	Available...
ContolNet Coax Tap Installation Instructions	1786-5.7	www.rockwellautomation.com/literature
ControlNet Cable System Planning and Installation Manual	1786-6.2.1	
ContolNet Fiber Media Planning and Installation Guide	CNET-IN001	
SynchLink Design Guide	1756-TD008	

Manual Conventions

- In this manual we refer to the PowerFlex 700S Adjustable Frequency AC Drive as: drive, PowerFlex 700S or PowerFlex 700S Drive.
- To help differentiate parameter names and LCD display text from other text, the following conventions will be used:
  - Parameter Names will appear in [brackets] after the Parameter Number.
    For example: Parameter 307 [Output Voltage].
  - Display text will appear in “quotes.” For example: “Enabled.”
- The following words are used throughout the manual to describe an action:

Word	Meaning
Can	Possible, able to do something
Cannot	Not possible, not able to do something
May	Permitted, allowed
Must	Unavoidable, you must do this
Shall	Required and necessary
Should	Recommended
Should Not	Not recommended

Drive Frame Sizes

Similar PowerFlex 700S drive sizes are grouped into frame sizes to simplify spare parts ordering, dimensioning, etc. A cross reference of drive catalog numbers and their respective frame size is provided in Appendix A.

General Precautions

Class 1 LED Product

ATTENTION: Hazard of permanent eye damage exists when using optical transmission equipment. This product emits intense light and invisible radiation. Do not look into module ports or fiber optic cable connectors.

ATTENTION: This drive contains **ESD** (Electrostatic Discharge) sensitive parts and assemblies. Static control precautions are required when installing, testing, servicing or repairing this assembly. Component damage may result if ESD control procedures are not followed. If you are not familiar with static control procedures, reference A-B publication 8000-4.5.2, “Guarding Against Electrostatic Damage” or any other applicable ESD protection handbook.

ATTENTION: An incorrectly applied or installed drive can result in component damage or a reduction in product life. Wiring or application errors, such as, undersizing the motor, incorrect or inadequate AC supply, or excessive ambient temperatures may result in malfunction of the system.

ATTENTION: Only **qualified personnel** familiar with the PowerFlex 700S Drive and associated machinery should plan or implement the installation, start-up and subsequent maintenance of the system. Failure to comply may result in personal injury and/or equipment damage.

ATTENTION: To avoid an electric shock hazard, verify that the voltage on the bus capacitors has discharged before performing any work on the drive. Measure the DC bus voltage at the +DC & –DC terminals of the Power Terminal Block (refer to Chapter 1 for location). The voltage must be zero.

ATTENTION: Risk of injury or equipment damage exists. DPI or SCANport host products must not be directly connected together via 1202 cables. Unpredictable behavior can result if two or more devices are connected in this manner.

ATTENTION: Risk of injury or equipment damage exists. Parameters 365 [Encdr0 Loss Cnfg] - 394 [VoltFdbkLossCnfg] let you determine the action of the drive in response to operating anomalies. Precautions should be taken to ensure that the settings of these parameters do not create hazards of injury or equipment damage.

ATTENTION: Risk of injury or equipment damage exists. Parameters 383 [SL CommLoss Data] - 392 [NetLoss DPI Cnfg] let you determine the action of the drive if communications are disrupted. You can set these parameters so that the drive continues to run. Precautions should be taken to ensure that the settings of these parameters do not create hazards of injury or equipment damage.

Catalog Number Explanation

Important: This table is not intended for ordering. For a full list of current options refer to publication 20D-PL001, *PowerFlex 700S/700S DriveLogix USA Price List*.

Position

1-3	4	5-7	8	9	10	11	12	13	14	15	16	17
20D	D	2P1	A	0	E	Y	N	A	N	N	N	N
a	*b*	*c*	*d*	*e*	*f*	*g*	*h*	*i*	*j*	*k*	*l*	*m*

a

Drive	
Code	Type
20D	PowerFlex 700S

b

Voltage Rating			
Code	Voltage	Ph.	Prechg.
B	240V ac	3	—
C	400V ac	3	—
D	480V ac	3	—
E	600V ac ♣	3	—
F	690V ac ➢	3	—
H	540V dc ⌘	—	N
J	650V dc ⌘	—	N
N	325V dc ➢	—	Y
P	540V dc ➢	—	Y
R	650V dc ➢	—	Y
T	810V dc ➢	—	Y
W	932V dc ➢	—	Y

♣ Note: CE Certification testing has not been performed on 600V class drives.

➢ Frames 5 & 6 Only.

⌘ Frames 5 & up.

c1

ND Rating			
208/240V, 60Hz Input			
Code	208V Amps	240V Amps	Hp
4P2	4.8	4.2	1.0
6P8	7.8	6.8	2.0
9P6	11	9.6	3.0
015	17.5	15.3	5.0
022	25.3	22	7.5
028	32.2	28	10
042	48.3	42	15
052	56	52	20
070	78.2	70	25
080	92	80	30
104	120	104	40
130	130	130	50
154	177	154	60
192	221	192	75

c2

ND Rating		
400V, 50 Hz Input		
Code	Amps	kW
2P1	2.1	0.75
3P5	3.5	1.5
5P0	5.0	2.2
8P7	8.7	4.0
011	11.5	5.5
015	15.4	7.5
022	22	11
030	30	15
037	37	18.5
043	43	22
056	56	30
072	72	37
085	85	45
105	105	55
125	125	55
140	140	75
170	170	90
205	205	110
260	260	132
261	261	132
300	300	160
385	385	200
460	460	250
500	500	250
590	590	315
650	650	355
730	730	400

c3

ND Rating		
480V, 60 Hz Input		
Code	Amps	Hp
2P1	2.1	1.0
3P4	3.4	2.0
5P0	5	3.0
8P0	8	5.0
011	11	7.5
014	14	10
022	22	15
027	27	20
034	34	25
040	40	30
052	52	40
065	65	50
077	77	60
096	96	75
125	125	100
156	156	125
180	180	150
248	248	200
261	261	200
300	300	250
385	385	300
460	460	350
500	500	450
590	590	500
650	650	500
730	730	600

c4

ND Rating		
600V, 60Hz Input ♣		
Code	Amps	Hp
022	22	20
027	27	25
032	32	30
041	41	40
052	52	50
062	62	60
077	77	75
099	99	100
125	125	125
144	144	150

♣ CE Certification testing has not been performed on 600V class drives.

Catalog Number Explanation, Cont'd

c5

ND Rating		
690V, 50 Hz Input ♣		
Code	Amps	Hp
052	52	45
060	60	55
082	82	75
098	98	90
119	119	110
142	142	132

♣ CE Certification testing has not been performed on 600V class drives.

d

Enclosure	
Code	Enclosure
A	IP20, NEMA Type 1
N	Open/IP00 ⌘

⌘ Frames 9 & up Only.

e

HIM	
Code	Operator Interface
0	Blank Cover
2	Digital LCD
3	Full Numeric LCD
5	Prog. Only LCD
C	Full Numeric LCD, Door Mount ❄

❄ Frames 10 & up only.

f

Documentation	
Code	Documents
E	Quick Start Guide
N	No Documentation

g

Brake	
Code	w/Brake IGBT ‡
Y	Yes
N	N o

‡ Brake IGBT is standard on Frames 1-3 and optional on Frames 4-9 ONLY.

h

Brake Resistor	
Code	w/Resistor
Y	Yes ∗
N	N o

∗ Not available for Frame 3 drives or larger.

i

Emission		
Code	CE Filter	CM Choke
A ❖	Yes	Yes
B ⌘	Yes	No
N §	No	No

❖ Frames 1-6 Only.

⌘ Frames 9 & up Only.

§ For use on ungrounded distribution systems (Frame 9 drives only).

j

Comm Slot	
Code	Version
N	None
C	DPI ControlNet (Coax)
D	DPI DeviceNet
E	DPI EtherNet/IP
Q	DPI ControlNet (Fiber)
R	DPI RIO
S	DPI RS-483 DF1
1	DriveLogix ControlNet (Coax)
2	DriveLogix ControlNet Redundant (Coax)
3	DriveLogix ControlNet (Fiber)
4	DriveLogix ControlNet Redundant (Fiber)
5	DriveLogix DeviceNet (Open Conn.)
6	DriveLogix EtherNet/IP

k

Control Options				
Code	Control Option	Logic Expansion	Synch -Link	Cassette
N	Phase I	N/A	Stand ard	None

l

Feedback	
Code	Option
N	None
A	Resolver
B	Stegman Hi-Resolution Encoder
C	Multi-Device Interface

m

Additional Config.	
Code	Description
N	Phase I Control
A	Phase I DriveLogix5720
B	Phase I DriveLogix5720 w/Expanded Memory

Installation/Wiring

Chapter Objectives

This chapter provides the information needed to mount and wire the PowerFlex 700S AC drive for Frames 1 - 6. For installation instructions for the PowerFlex 700S AC drive for Frames 9 - 12, refer to PFLEX-IN006.

For Information on ...	See Page...
Opening the Cover	1-2
Mounting Clearances	1-2
AC Supply Source Considerations	1-3
Grounding Requirements	1-4
Fuses and Circuit Breakers	1-5
Power Wiring	1-6
Using Input/Output Contactors	1-15
Disconnecting MOVs and Common Mode Capacitors	1-16
I/O Wiring	1-19
Connecting SynchLink	1-33
CE Conformity	1-35

Since most start-up difficulties are the result of incorrect wiring, take every precaution to assure the wiring is correct. Read and understand all items in this chapter before beginning installation.

ATTENTION: The following information is merely a guide for proper installation. Rockwell Automation, Inc. cannot assume responsibility for the compliance or the noncompliance to any code, national, local or otherwise for the proper installation of this drive or associated equipment. A hazard of personal injury and/or equipment damage exists if codes are ignored during installation.

Opening the Cover

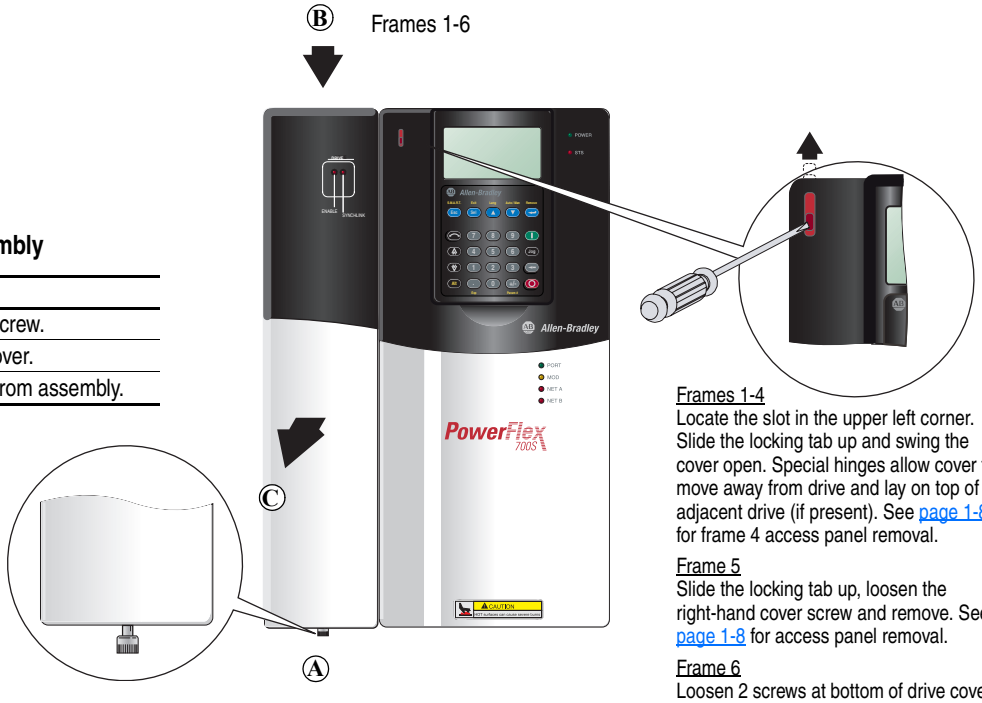

Opening Control Assembly

Step	Description
Ⓐ	Loosen captive screw.
Ⓑ	Push down on cover.
Ⓒ	Pull cover away from assembly.

Frames 1-4
Locate the slot in the upper left corner. Slide the locking tab up and swing the cover open. Special hinges allow cover to move away from drive and lay on top of adjacent drive (if present). See page 1-8 for frame 4 access panel removal.

Frame 5
Slide the locking tab up, loosen the right-hand cover screw and remove. See page 1-8 for access panel removal.

Frame 6
Loosen 2 screws at bottom of drive cover. Carefully slide bottom cover down and out. Loosen the 2 screws at top of cover and remove.

Mounting Clearances

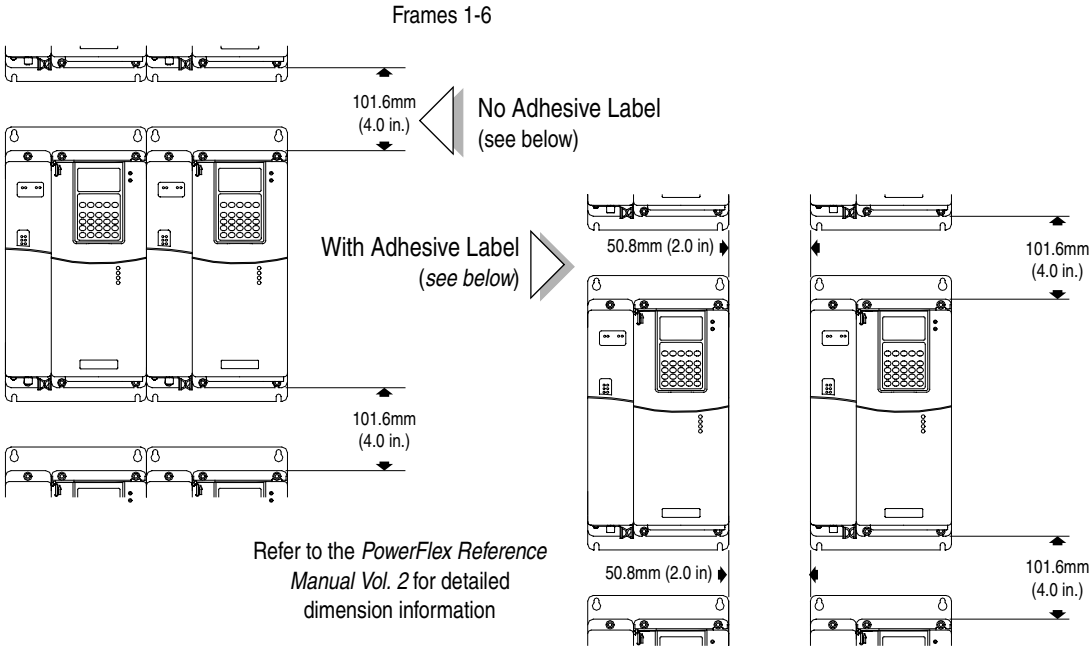

Refer to the *PowerFlex Reference Manual Vol. 2* for detailed dimension information

Operating Temperatures

PowerFlex 700S drives are designed to operate in surrounding air temperature of 0° to 40° C. To operate the drive in installations with surrounding air temperature between 41° and 50° C, remove the adhesive label affixed to the top of the drive enclosure.

Table 1.A Acceptable Surrounding Air Temperature & Required Actions

	Required Action . . .		
	IP 20, NEMA Type 1	**IP 20, NEMA Type Open**	**IP 00, NEMA Type Open**
Drive Catalog Number	*No Action Required*	*Remove Top Label*	*Remove Top Label & Vent Plate*[1]
All *Except* 20BC072	40° C	50° C	NA
20BC072	40° C	45° C	50° C

(1) To remove vent plate (see page A-20 for location), lift top edge of plate from the chassis. Rotate the plate out from the back plate.

Important: Removing the adhesive label from the drive changes the NEMA enclosure rating from Type 1 to Open type.

AC Supply Source Considerations

PowerFlex drives are suitable for use on a circuit capable of delivering up to a maximum of 200,000 rms symmetrical amperes, 600 volts with recommended fuses/circuit breakers. Refer to the *PowerFlex Reference Manual Vol. 2* for actual interrupt ratings based on circuit breaker or fuse choice.

ATTENTION: To guard against personal injury and/or equipment damage caused by improper fusing or circuit breaker selection, use only the recommended line fuses/circuit breakers specified in Appendix A.

If a Residual Current Detector (RCD) is used as a system ground fault monitor, only Type B (adjustable) devices should be used to avoid nuisance tripping.

Unbalanced or Ungrounded Distribution Systems

If phase to ground voltage will exceed 125% of normal or the supply system is ungrounded, refer to the *Wiring and Grounding Guidelines for PWM Drives* for more information.

ATTENTION: PowerFlex 700S drives contain protective MOVs and common mode capacitors that are referenced to ground. These devices should be disconnected if the drive is installed on an ungrounded distribution system. See page page 1-18 for jumper locations.

Input Power Conditioning

Certain events on the power system supplying a drive can cause component damage or shortened product life. These conditions are divided into 2 basic categories:

1. **All Drives**
   - The power system has power factor correction capacitors switched in and out of the system, either by the user or by the power company.
   - The power source has intermittent voltage spikes in excess of 6000 volts. These spikes could be caused by other equipment on the line or by events such as lightning strikes.
   - The power source has frequent interruptions.
2. **5 HP or Less Drives (in addition to "1" above)**
   - The nearest supply transformer is larger than 100kVA or the available short circuit (fault) current is greater than 100,000A.
   - The impedance in front of the drive is less than 0.5%.

If any or all of these conditions exist, it is recommended that the user install a minimum amount of impedance between the drive and the source. This impedance could come from the supply transformer itself, the cable between the transformer and drive or an additional transformer or reactor. The impedance can be calculated using the information supplied in either the *PowerFlex Reference Manual Vol. 2* or the technical document *Wiring and Grounding Guidelines*, publication DRIVES-IN001.

Grounding Requirements

The drive Safety Ground-PE must be connected to system ground. Ground impedance must conform to the requirements of national and local industrial safety regulations and/or electrical codes. The integrity of all ground connections should be periodically checked.

Recommended Grounding Scheme

A single point (PE only) grounding scheme should be used. Some applications may require alternate grounding schemes, refer to the *Wiring and Grounding Guidelines for PWM AC Drives,* publication number DRIVES-IN001 for more information. These applications include installations with long distances between drives or drive line-ups, which could cause large potential differences between the drive or line-up grounds.

For installations within a cabinet, a single safety ground point or ground bus bar connected directly to building steel should be used. All circuits including the AC input ground conductor should be grounded independently and directly to this point/bar.

Figure 1.1 Typical Grounding

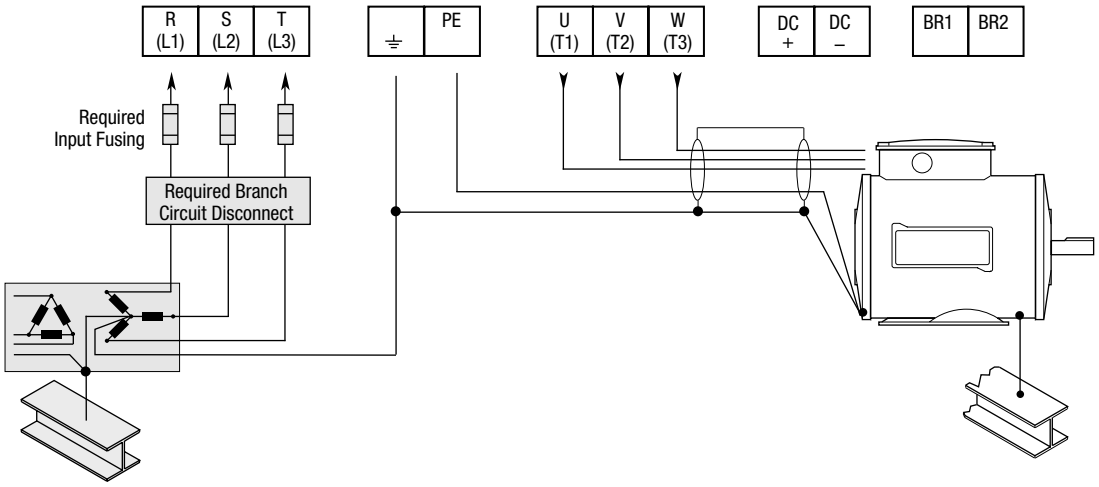

Shield Termination - SHLD

The Shield terminal (see Figure 1.3 on page 1-12) provides a grounding point for the motor cable shield. It must be connected to an earth ground by a separate continuous lead. The **motor cable** shield should be connected to this terminal on the drive (drive end) and the motor frame (motor end). Use a shield terminating or EMI clamp to connect shield to this terminal.

RFI Filter Grounding

Using an optional RFI filter may result in relatively high ground leakage currents. Therefore, the **filter must only be used in installations with grounded AC supply systems and be permanently installed and solidly grounded** (bonded) to the building power distribution ground. Ensure that the incoming supply neutral is solidly connected (bonded) to the same building power distribution ground. Grounding must not rely on flexible cables and should not include any form of plug or socket that would permit inadvertent disconnection. Some local codes may require redundant ground connections. The integrity of all connections should be periodically checked. Refer to the instructions supplied with the filter.

Fuses and Circuit Breakers

The PowerFlex 700S can be installed with either input fuses or an input circuit breaker. Local/national electrical codes may determine additional requirements for these installations. Refer to Appendix A for recommended fuses/circuit breakers.

ATTENTION: The PowerFlex 700S does not provide input power short circuit protection. Specifications for the recommended fuse or circuit breaker to provide drive input power protection against short circuits are provided in Appendix A.

Power Wiring

Power Cable Types Acceptable for 200-600 Volt Installations

ATTENTION: National Codes and standards (NEC, BSI etc.) and local codes outline provisions for safely installing electrical equipment. Installation must comply with specifications regarding wire types, conductor sizes, branch circuit protection and disconnect devices. Failure to do so may result in personal injury and/or equipment damage.

A variety of cable types are acceptable for drive installations. For many installations, unshielded cable is adequate, provided it can be separated from sensitive circuits. As an approximate guide, allow a spacing of 0.3 meters (1 foot) for every 10 meters (32.8 feet) of length. In all cases, long parallel runs must be avoided. Do not use cable with an insulation thickness less than or equal to 15 mils (0.4mm/0.015 in.). Use copper wire only. Wire gauge requirements and recommendations are based on 75° C. Do not reduce wire gauge when using higher temperature wire.

Unshielded

THHN, THWN or similar wire is acceptable for drive installation in dry environments provided adequate free air space and/or conduit fill rates limits are provided. **Do not use THHN or similarly coated wire in wet areas**. Any wire chosen must have a minimum insulation thickness of 15 Mils and should not have large variations in insulation concentricity.

Shielded/Armored Cable

Shielded cable contains all of the general benefits of multi-conductor cable with the added benefit of a copper braided shield that can contain much of the noise generated by a typical AC Drive. Strong consideration for shielded cable should be given in installations with sensitive equipment such as weigh scales, capacitive proximity switches and other devices that may be affected by electrical noise in the distribution system. Applications with large numbers of drives in a similar location, imposed EMC regulations or a high degree of communications/networking are also good candidates for shielded cable.

Shielded cable may also help reduce shaft voltage and induced bearing currents for some applications. In addition, the increased impedance of shielded cable may help extend the distance the motor can be located from the drive without the addition of motor protective devices such as terminator networks. Refer to Reflected Wave in *Wiring and Grounding Guidelines for PWM AC Drives*, publication DRIVES-IN001.

Consideration should be given to all of the general specifications dictated by the environment of the installation, including temperature, flexibility, moisture characteristics and chemical resistance. In addition, a braided shield should be included and specified by the cable manufacturer as having coverage of at least 75%. An additional foil shield can be greatly improve noise containment.

A good example of recommended cable is Belden® 295xx (xx determines gauge). This cable has 4 XLPE insulated conductors with a 100% coverage foil and an 85% coverage copper braided shield (with drain wire) surrounded by a PVC jacket.

Other types of shielded cable are available, but the selection of these types may limit the allowable cable length. Particularly, some of the newer cables twist 4 conductors of THHN wire and wrap them tightly with a foil shield. This construction can greatly increase the cable charging current required and reduce the overall drive performance. Unless specified in the individual distance tables as tested with the drive, these cables are not recommended and their performance against the lead length limits supplied is not known.

Table 1.B Recommended Shielded Wire

Location	Rating/Type	Description
Standard (Option 1)	600V, 90° C (194° F) XHHW2/RHW-2 Anixter B209500-B209507, Belden 29501-29507, or equivalent	Four tinned copper conductors with XLPE insulation. Copper braid/aluminum foil combination shield and tinned copper drain wire. PVC jacket.
Standard (Option 2)	Tray rated 600V, 90° C (194° F) RHH/RHW-2 Anixter OLF-7xxxxx or equivalent	Three tinned copper conductors with XLPE insulation. 5 mil single helical copper tape (25% overlap min.) with three bare copper grounds in contact with shield. PVC jacket.
Class I & II; Division I & II	Tray rated 600V, 90° C (194° F) RHH/RHW-2 Anixter 7V-7xxxx-3G or equivalent	Three bare copper conductors with XLPE insulation and impervious corrugated continuously welded aluminum armor. Black sunlight resistant PVC jacket overall. Three copper grounds on #10 AWG and smaller.

EMC Compliance

Refer to CE Conformity on page 1-35 for details.

Cable Trays and Conduit

If cable trays or large conduits are to be used, refer to guidelines presented in the *Wiring and Grounding Guidelines for PWM AC Drives*.

ATTENTION: To avoid a possible shock hazard caused by induced voltages, unused wires in the conduit must be grounded at both ends. For the same reason, if a drive sharing a conduit is being serviced or installed, all drives using this conduit should be disabled. This will help minimize the possible shock hazard from “cross coupled” motor leads.

Motor Cable Lengths

Typically, motor lead lengths less than 30 meters (100 feet) are acceptable. Motor lead lengths of 30 meters (100 feet) to 246 meters (800 feet) require shielded cable. If your application dictates longer lengths, refer to publication 20D-TD001, *Technical Data - PowerFlex 700S Drives*, for details.

Power Terminal Block

Figure 1.3 shows the typical location of the Power Terminal Block in Frame 1 drives. The terminal block is located in the bottom section of the drive on Frame 2-5 drives.

Cable Entry Plate Removal

If additional wiring access is needed, the Cable Entry Plate on Frame 1-3 drives can be removed. Simply loosen the screws securing the plate to the chassis. The slotted mounting holes assure easy removal.

Important: Removing the Cable Entry Plate limits the maximum surrounding air temperature to 40° C (104° F).

Power Wiring Access Panel Removal

Frame	Removal Procedure *(Replace when wiring is complete)*
1, 2 & 6	Part of front cover, see page 1-2.
3	Open front cover and gently tap/slide cover down and out.
4	Loosen the 4 screws and remove.
5	Remove front cover (see page 1-2), gently tap/slide panel up and out.

Access Panel Removal

Frame 3 drives utilize a panel/cover over the power wiring terminals. To remove, simply slide it down and out.

Replace the cover when wiring is complete.

ATTENTION: Removing the access panel/cover exposes dangerous voltages on the terminals and negates the enclosure type rating. Replace the access panel/cover when service is complete. Failure to comply may result in personal injury or equipment damage.

AC Input Phase Selection (Frames 5 & 6 Only)

ATTENTION: To avoid a shock hazard, ensure that all power to the drive has been removed before performing the following.

Moving the "Line Type" jumper shown in Figure 1.2 will select single or three-phase operation. Remove plastic guard to access jumper.

Important: When selecting single-phase operation, input power must be applied to the R (L1) and S (L2) terminals only.

Cooling Fan Voltage

Common Bus drives require user supplied 120 or 240V AC to power the cooling fans. Power source is connected between "0V AC" and the terminal corresponding to your source voltage (see Figure 1.4 on page 1-13).

Table 1.C Fan VA Rating

Frame	Fan Voltage *(120V or 240V)*
5	100 VA
6	138 VA

Selecting/Verifying Fan Voltage (Frames 5 & 6 Only)

ATTENTION: To avoid a shock hazard, ensure that all power to the drive has been removed before performing the following.

Frames 5 & 6 utilize a transformer to match the input line voltage to the internal fan voltage. If your line voltage is different than the voltage class specified on the drive nameplate, it may be necessary to change the transformer taps. The taps are shown in the insert of frame 5 below.

Figure 1.2 Frames 5 & 6 Jumper and Transformer Locations (Frame 5 shown)

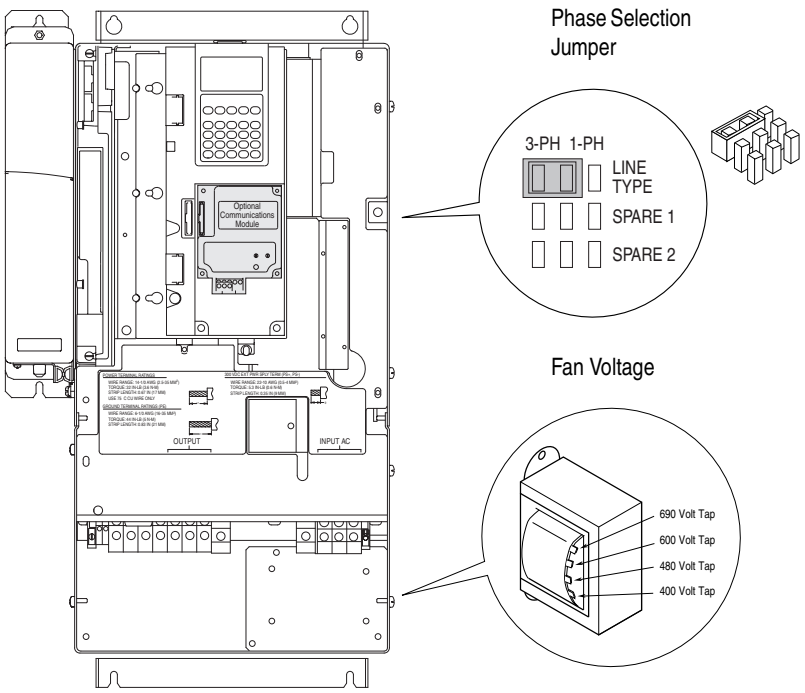

Frame 6 Transformer Tap Access

The transformer is located behind the Power Terminal Block in the area shown in Figure 1.2. Gain access by releasing the terminal block from the rail. To release terminal block and change tap:

1. Locate the small metal tab at the bottom of the end block.
2. Press the tab in and pull the top of the block out. Repeat for next block if desired.
3. Select appropriate transformer tap.
4. Replace block(s) in reverse order.

Important Common Bus (DC Input) Application Notes

1. If drives without internal precharge are used (Frames 5 & 6 only), then:
   a) precharge capability must be provided in the system to guard against possible damage, and
2. disconnect switches Must Not be used between the input of the drive and a common DC bus without the use of an external precharge device.

Table 1.D Power Terminal Block Specifications

No.	Name	Frame	Description	Wire Size Range[1] Maximum	Wire Size Range[1] Minimum	Torque Maximum	Torque Recommended	Terminal Bolt Size[2]
❶	Power Terminal Block	1	Input power and motor connections	4.0 mm^2 (10 AWG)	0.5 mm^2 (22 AWG)	1.7 N-m (15 lb.-in.)	0.8 N-m (7 lb.-in.)	—
		2	Input power and motor connections	10.0 mm^2 (6 AWG)	0.8 mm^2 (18 AWG)	1.7 N-m (15 lb.-in.)	1.4 N-m (12 lb.-in.)	—
		3	Input power and motor connections	25.0 mm^2 (3 AWG)	2.5 mm^2 (14 AWG)	3.6 N-m (32 lb.-in.)	1.8 N-m (16 lb.-in.)	—
			BR1, BR2	10.0 mm^2 (6 AWG)	0.8 mm^2 (18 AWG)	1.7 N-m (15 lb.-in.)	1.4 N-m (12 lb.-in.)	—
		4	Input power and motor connections	35.0 mm^2 (1/0 AWG)	10 mm^2 (8 AWG)	4.0 N-m (24 lb.-in.)	4.0 N-m (24 lb.-in.)	—
		5 (75 HP)[3]	R, S, T, BR1, BR2, DC+, DC-, U, V and W	50.0 mm^2 (1/0 AWG)	2.5 mm^2 (14 AWG)	See Note [4]	See Note [3]	—
			PE	50.0 mm^2 (1/0 AWG)	4.0 mm^2 (12 AWG)			—
		5 (100 HP)[3]	R, S, T, DC+, DC-, U, V and W	70.0 mm^2 (2/0 AWG)	16.0 mm^2 (6 AWG)			—
			BR1, BR2	50.0 mm^2 (1/0 AWG)	2.5 mm^2 (14 AWG)			—
			PE	50.0 mm^2 (1/0 AWG)	4.0 mm^2 (12 AWG)			—
		6	Input power and motor connections	120.0 mm^2 (4/0 AWG)	2.5 mm^2 (14 AWG)	6 N-m (52 lb.-in.)	6 N-m (52 lb.-in.)	—
❷	SHLD Terminal	1-6	Terminating point for wiring shields	—	—	1.6 N-m (14 lb.-in.)	1.6 N-m (14 lb.-in.)	M12
❸	AUX Terminal Block	1-4	Auxiliary Control Voltage[5] PS+, PS-	1.5 mm^2 (16 AWG)	0.2 mm^2 (24 AWG)	—	—	—
		5-6		4.0 mm^2 (10 AWG)	0.5 mm^2 (22 AWG)	0.6 N-m (5.3 lb.-in.)	0.6 N-m (5.3 lb.-in.)	—
❹	Fan Terminal Block (Common Bus Only)	5-6	User Supplied Fan Voltage 0V AC, 120V AC, 240V AC	4.0 mm^2 (10 AWG)	0.5 mm^2 (22 AWG)	0.6 N-m (5.3 lb.-in.)	0.6 N-m (5.3 lb.-in.)	M10

(1) Maximum/minimum sizes that the terminal block will accept - these are not recommendations.

(2) Apply counter torque to the nut on the other side of terminations when tightening or loosening the terminal bolt in order to avoid damage to the terminal.

(3) Not all terminals present on all drives.

(4) Refer to the terminal block label inside the drive.

(5) Auxiliary power:
UL Installation - 300V DC, ±10%, Non UL Installation - 270-600V DC, ±10%.
Frame 1-6, 100 W

Figure 1.3 Typical Power Terminal Block Location

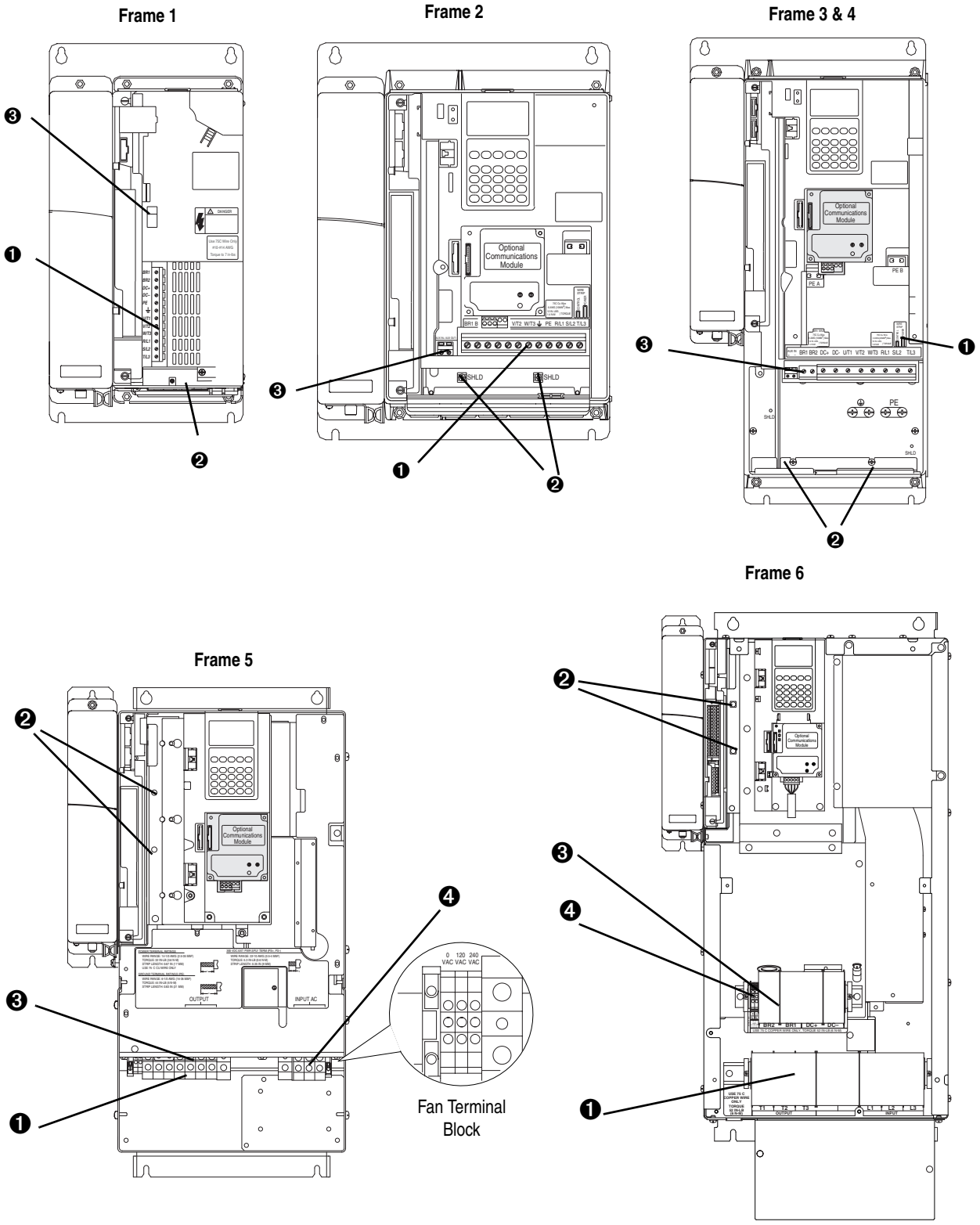

Figure 1.4 Power Terminal Block

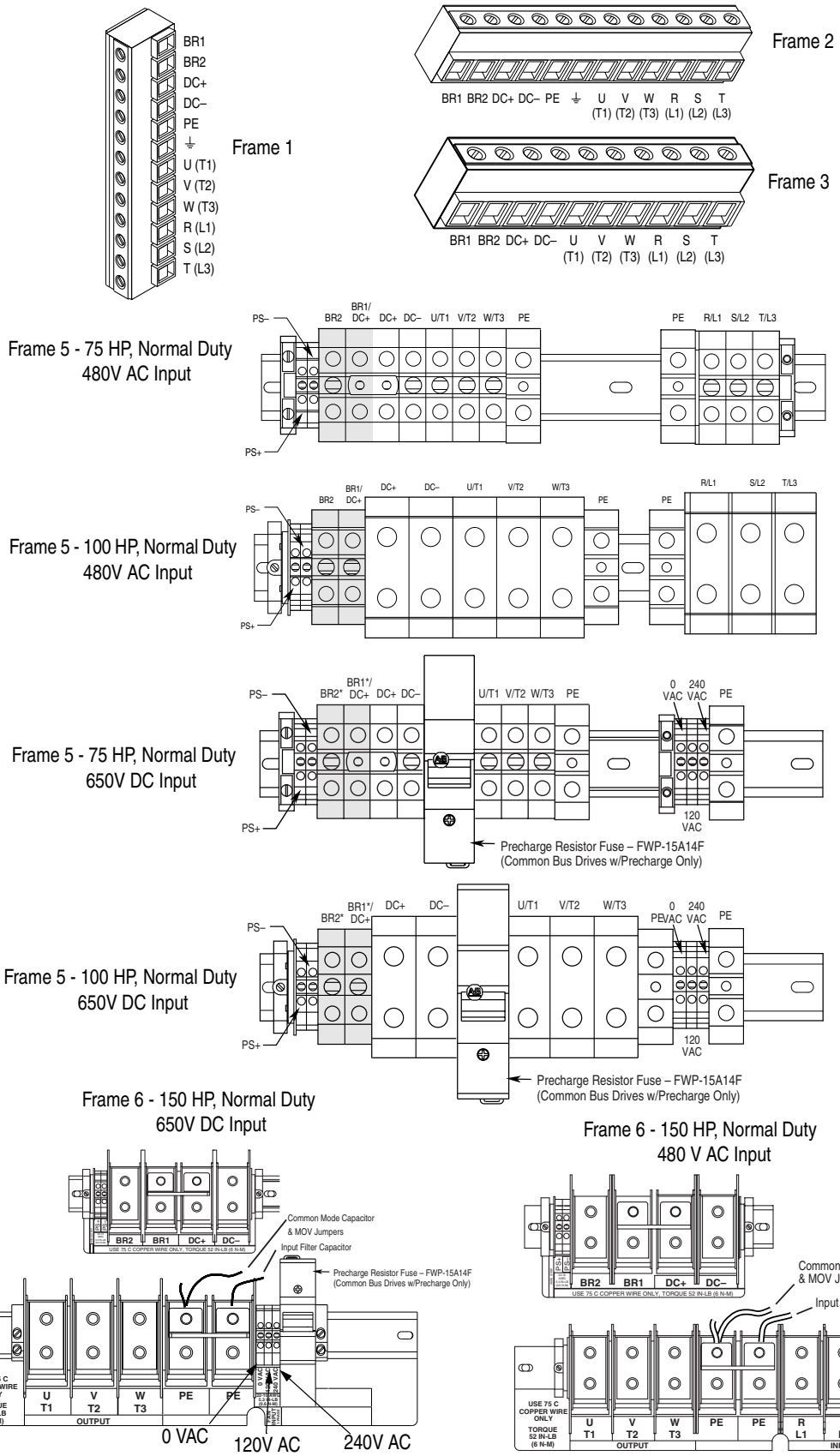

Shaded terminals (BR1 & BR2) will only be present on drives ordered with the Brake Option.

Table 1.E Terminal Block Descriptions

Terminal	Description	Notes
BR1	DC Brake (+)	Dynamic Brake Resistor Connection (+)
BR2	DC Brake (–)	Dynamic Brake Resistor Connection (–)
DC+	DC Bus (+)	DC Input Power or Dynamic Brake Chopper
DC–	DC Bus (–)	DC Input Power or Dynamic Brake Chopper
PE	PE Ground	Refer to Figure 1.4 for location on 3 Frame drives
PS+	Aux +	Auxiliary Control Voltage. See Table 1.D on page 1-11[(1)]
PS-	Aux -	Auxiliary Control Voltage. See Table 1.D on page 1-11[(1)]
⏚	Motor Ground	Refer to Figure 1.3 for location on 3 Frame drives
U	U (T1)	To motor
V	V (T2)	To motor
W	W (T3)	To motor
R	R (L1)	AC Line Input Power Three-Phase = R, S & T Single-Phase = R & S
S	S (L2)	
T	T (L3)	

(1) Auxiliary power:
UL Installation - 300V DC, ±10%, Non UL Installation - 270-600V DC, ±10%.
1-3 Frame - 40 W, 165 mA, 5 Frame - 80 W, 90 mA

Dynamic Brake Resistor Considerations

ATTENTION: The drive does not offer protection for externally mounted brake resistors. A risk of fire exists if external braking resistors are not protected. External resistor packages must be self-protected from over temperature or a circuit equivalent to the one shown below must be supplied.

Figure 1.5 External Brake Resistor Circuitry

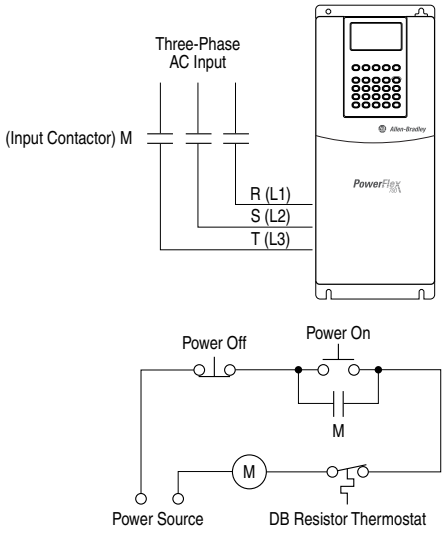

Using Input/Output Contactors

ATTENTION: A contactor or other device that routinely disconnects and reapplies the AC line to the drive to start and stop the motor can cause drive hardware damage. The drive is designed to use control input signals that will start and stop the motor. If an input device is used occasionally, an auxiliary contact on that device should also be wired to a digital input programmed as a "Enable" function. The input device must not exceed one operation per minute or drive damage will occur.

ATTENTION: The drive start/stop control circuitry includes solidstate components. If hazards due to accidental contact with moving machinery or unintentional flow of liquid, gas or solids exist, an additional hardwired stop circuit may be required to remove the AC line to the drive. When the AC line is removed, there will be a loss of any inherent regenerative braking effect that might be present - the motor will coast to a stop. An auxiliary braking method may be required.

ATTENTION: To guard against drive damage when using output contactors, the following information must be read and understood. One or more output contactors may be installed between the drive and motor(s) for the purpose of disconnecting or isolating certain motors/loads. If a contactor is opened while the drive is operating, power will be removed from the respective motor, but the drive will continue to produce voltage at the output terminals. In addition, reconnecting a motor to an active drive (by closing the contactor) could produce excessive current that may cause the drive to fault. If any of these conditions are determined to be undesirable or unsafe, an auxiliary contact on the output contactor should be wired to a drive digital input that is programmed as "Enable." This will cause the drive to execute a coast-to-stop (cease output) whenever an output contactor is opened.

Using PowerFlex 700S Drives with Regenerative Power Units

If a Regenerative unit (i.e., 1336 REGEN) is used as a bus supply or a brake, the common mode capacitors should be disconnected (see Table 1.F on page 1-16).

Regenerative Unit to Drive Connections

Regenerative Brake Mode

Frame(s)	Terminals	
	1336 Regen	PowerFlex 700S
1 - 4	DC+ & DC-	BR1 & DC-
5 & 6	DC+ & DC-	DC+ & DC-

Regenerative Bus Supply Mode

Frame(s)	Terminals	
	1336 Regen	PowerFlex 700S
1 - 4	DC+ & DC-	DC+ & DC-
5 & 6	DC+ & DC-	DC+ & DC- of the Common Bus Drives

Disconnecting MOVs and Common Mode Capacitors

PowerFlex 700S drives contain protective MOVs and common mode capacitors that are referenced to ground. To guard against drive damage, these devices must be disconnected if the drive is installed on a resistive grounded distribution system or an ungrounded distribution system where the line-to-ground voltages on any phase could exceed 125% of the nominal line-to-line voltage. To disconnect these devices, remove the jumper(s) listed in Table 1.F. Jumpers can be removed by carefully pulling the jumper straight out. See the *Wiring and Grounding Guidelines for Pulse Width Modulated (PWM) AC Drives,* publication DRIVES-IN001 for more information on ungrounded system installation.

ATTENTION: To avoid an electric shock hazard, verify that the voltage on the bus capacitors has discharged before removing/installing jumpers. Measure the DC bus voltage at the +DC & –DC terminals of the Power Terminal Block. The voltage must be zero.

Table 1.F Jumper Removal

Frames	Jumper	Component	Jumper Location	No.
1	PEA	Common Mode Capacitors	Remove the Control Assembly and Cassette. Jumpers are located on the drive Power Board (see Figure 1.6).	❶
	PEB	MOV's		❷
2-4	PEA	Common Mode Capacitors	Jumpers are located above the Power Terminal Block (see Figure 1.6).	❸
	PEB	MOV's		❹
5	Wire	Common Mode Capacitors	Remove the I/O Cassette. The green/yellow jumper is located on the back of chassis in the area shown (see Figure 1.6). Disconnect, insulate and secure the wire to guard against unintentional contact with chassis or components.	❺
		MOV's Input Filter Capacitors	Note location of green/yellow jumper wire in Figure 1.6. Disconnect, insulate and secure the wire guard against unintentional contact with chassis or components.	❻

Frames	Jumper	Component	Jumper Location	No.
6	Wire	Common Mode Capacitors MOV's Input Filter Capacitors	Remove the wire guard from the Power Terminal Block. Disconnect the three green/yellow wires from the two "PE" terminals shown in Figure 1.4. Insulate and secure the wires to guard against unintentional contact with chassis or components.	Please refer to Power Terminal Blocks, Frame 6 on page 1-12.

ATTENTION: The disconnecting MOV must be used on a grounded system.

Figure 1.6 Typical Jumper Locations

Frame 1
(Control Assembly and I/O Cassette Removed)

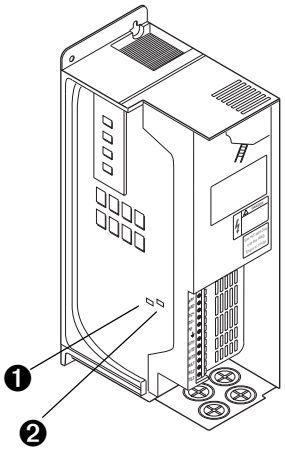

Frame 2

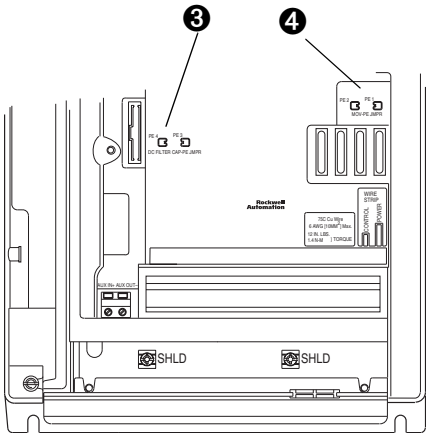

Frames 3 & 4

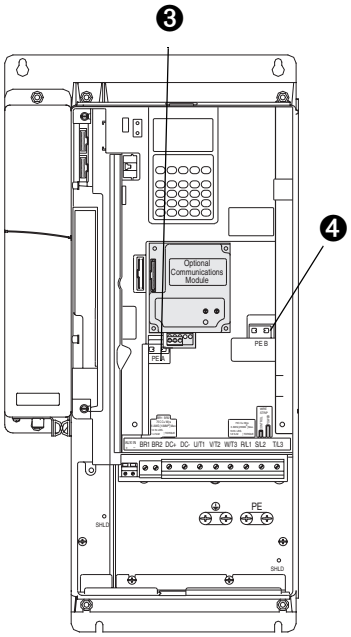

Frame 5

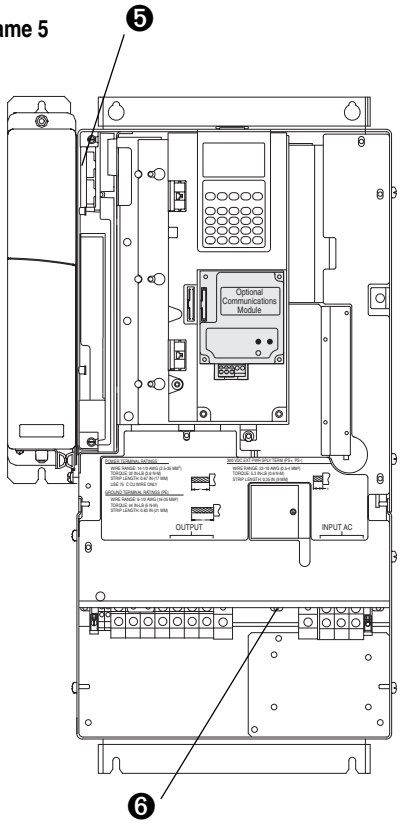

I/O Wiring

Important points to remember about I/O wiring:

- Always use tinned copper wire.
- Wire with an insulation rating of 600V or greater is recommended.
- Control and signal wires should be separated from power wires by at least 0.3 meters (1 foot).
- 4100CCF3 Flex I/O cable for use with DriveLogix is 3 ft. maximum length.

Important: I/O terminals labeled "(–)" or "Common" are not referenced to earth ground and are designed to greatly reduce common mode interference. Grounding these terminals can cause signal noise.

ATTENTION: Hazard of personal injury or equipment damage exists when using bipolar input sources. Noise and drift in sensitive input circuits can cause unpredictable changes in motor speed and direction. Use speed command parameters to help reduce input source sensitivity.

Table 1.G Recommended Control Wire

Type		Wire Type(s)	Description	Insulation Rating
Digital I/O	Un-shielded	Per US NEC or applicable national or local code	–	300V, 60° C (140° F), Minimum
	Shielded	Multi-conductor shielded cable such as Belden 8770 (or equiv.)	0.750 mm^2 (18 AWG), 3 conductor, shielded.	
Standard Analog I/O	Belden 8760/9460 (or equiv.)		0.750 mm^2 (18 AWG), twisted pair, 100% shield with drain (5).	300V, 75-90 °C (167-194 °F)
Remote Pot	Belden 8770 (or equiv.)		0.750 mm^2 (18 AWG), 3 cond., shielded	
Encoder/ Pulse I/O Less 30.5 m (100 ft.)	Combined:	Belden 9730 (or equivalent) (1)	0.196 mm^2 (24 AWG), individually shielded.	
Encoder/ Pulse I/O 30.5 m (100 ft.) to 152.4 m (500 ft.)	Signal:	Belden 9730/9728 (or equivalent) (1)	0.196 mm^2 (24 AWG), individually shielded.	
	Power:	Belden 8790 (2)	0.750 mm^2 (18 AWG)	
	Combined:	Belden 9892 (3)	0.330 mm^2 or 0.500 mm^2 (3)	
Encoder/ Pulse I/O 152.4 m (500 ft.) to 259.1 m (850 ft.)	Signal:	Belden 9730/9728 (or equivalent) (1)	0.196 mm^2 (24 AWG), individually shielded.	
	Power:	Belden 8790 (2)	0.750 mm^2 (18 AWG)	
	Combined:	Belden 9773/9774 (or equivalent) (4)	0.750 mm^2 (18 AWG), individually shielded pair.	
EMC Compliance	Refer to EMC Instructions on page 1-6 for details.			

(1) Belden 9730 is 3 individually shielded pairs (2 channel plus power). If 3 channel is required, use Belden 9728 (or equivalent).

(2) Belden 8790 is 1 shielded pair.

(3) Belden 9892 is 3 individually shielded pairs (3 channel), 0.33 mm^2 (22 AWG) plus 1 shielded pair 0.5 mm^2 (20 AWG) for power.

(4) Belden 9773 is 3 individually shielded pairs (2 channel plus power). If 3 channel is required, use Belden 9774 (or equivalent).

(5) If the wires are short and contained within a cabinet which has no sensitive circuits, the use of shielded wire may not be necessary, but is always recommended.

Wiring the Main Control Board I/O Terminals

Terminal blocks TB1 and TB2 contain connection points for all inputs, outputs and standard encoder connections. Both terminal blocks reside on the Main Control Board.

Remove the terminal block plug from the socket, and make connections.

TIP: Remember to route wires through the sliding access panel at the bottom Control Assembly.

Reinstall the plug, when wiring is complete. The terminal blocks have keys, which make it difficult to insert a terminal plug into the wrong socket.

Table 1.H Main Control Board I/O Terminal Locations

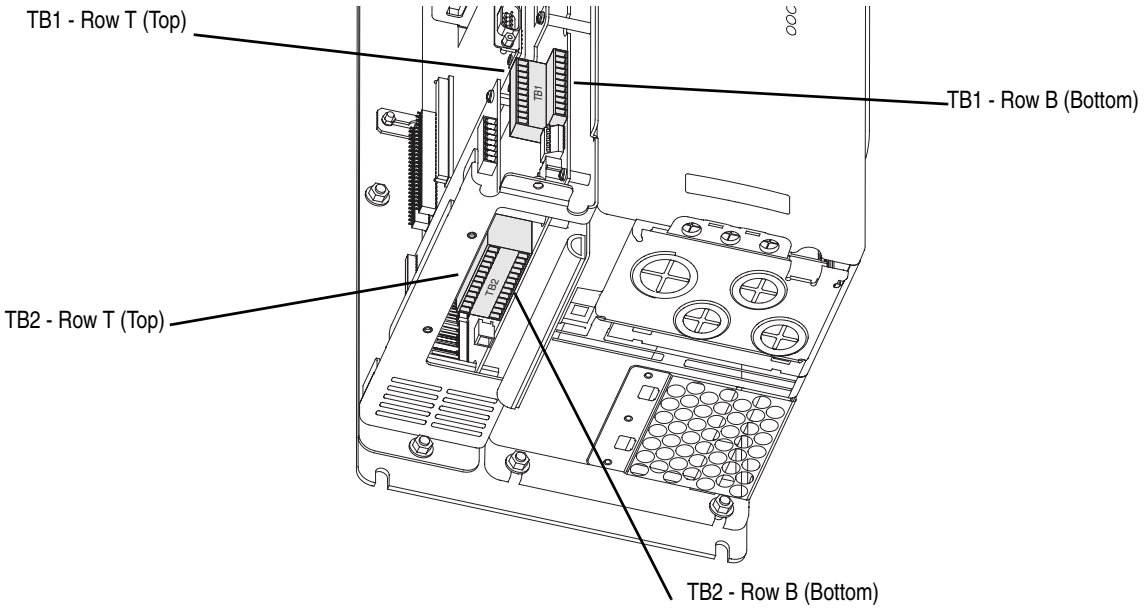

Table 1.I Main Control Board I/O Terminal Block Specifications

Name	Frame	Description	Wires Size Range[1]		Torque	
			Maximum	Minimum	Maximum	Recommended
I/O & Encoder Blocks	1-6	Signal & Encoder power connections	1.5 mm^2 (16 AWG)	.14 mm^2 (28 AWG)	.25 N-m (2.2 lb.-in.)	.22 N-m (1.9 lb.-in.)

(1) Maximum/minimum sizes the terminal block will accepts - these are not recommendations.

Auxiliary Power Supply

You may use an auxiliary power supply to keep the 700S Control Assembly energized when output power is de-energized. This allows the Main Control Board, DriveLogix controller and any feedback option cards to continue operation. Connect auxiliary power to terminal block. See Table 1.D on page 1-11. You must set Par 153 [Control Options], bit 7 [Aux Pwr Sply] to enable this feature.

Hard Enable Circuitry

A dedicated hardware enable input is provided for applications that require the drive to be disabled without software interpretation.

Table 1.J TB1 - Row T (Top) Terminals

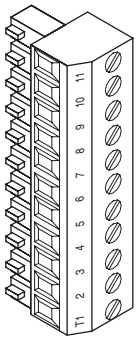

Terminal	Signal	Description	Related Parameter
T11	Power Supply 24V DC Return (-)	Power and common for pre charge and enable inputs.(1) Inputs may sink or source.(2) Rating: 100 mA maximum.	
T10	Power Supply 24V DC (+)		
T9	Logic Common		
T8	Digital Input #1 Default = Precharge	For common DC bus drives. Must be high, for drive to complete the pre charge cycle. Load: 20 mA at 24V DC.	824, 826, 827, 828, 829, 838
T7	Enable Input	Must be high for drive to run. Load: 20 mA at 24V DC.	824, 825
T6	Digital Output #1	24V DC open collector (sinking logic) output. Rating: 25 mA maximum.	824, 843, 844
T5	Digital Output #2	24V DC open collector (sinking logic) output. Rating: 25 mA maximum.	824, 845, 846
T4	Digital Output Return	Return for Digital outputs 1 and 2.	
T3	Thermistor Input	Used only in FOC2 mode with approved motor for temperature adaptation. Refer to Appendix A, Specifications for approved motors.	485
T2	Thermistor Input Return		
T1	Thermistor Shield		

(1) The drive's 24V DC power supply supports only on-board digital inputs. Do not use it to power circuits outside of the drive.

(2) Refer to wiring examples of sinking and sourcing outputs.

.

Table 1.K TB1 - Row T (Top) Wiring Examples

The following definitions are used throughout this section:

Source
A. Apply positive voltage through the device to the input or output.
B. Connect the input or output common (return) directly to the power supply common.

Sinking
A. Apply the positive voltage directly to the input or output common (return).
B. Connect the input or output to the power supply common through the device

Input/Output	Connection Example	Required Parameter Changes
Digital Inputs used for enable and precharge control. *Note:* **24V DC Supply** - supports only on-board digital inputs. Do not use for circuits outside the drive.	Sourcing Precharge and Enable Inputs - using internal power supply 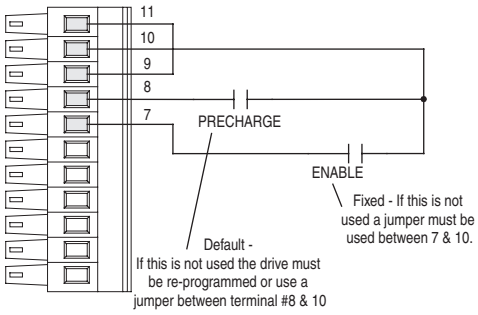 	**Enable** - In sourcing configuration. this circuit must connect to 24V DC power for drive to run. **Precharge** Precharge control is used in common bus configurations and is not required for AC fed drives. If precharge control is not required, reprogram Par 838 [DigIn1 Sel] to a value of zero or replace the contact shown with a jumper from Terminal 8 to Terminal 10. If precharge is needed, in sourcing configuration, this circuit must connect to 24V DC power for drive to complete the precharge cycle.
	Sourcing Precharge and Enable Inputs - using external power 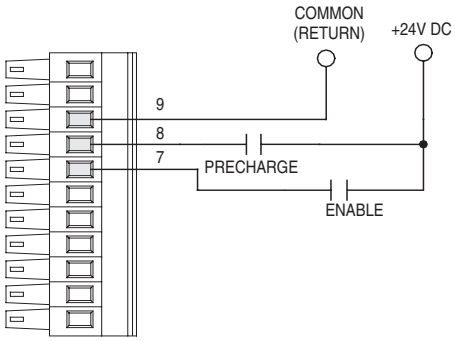 	

Table 1.K TB1 - Row T (Top) Wiring Examples

Input/Output	Connection Example	Required Parameter Changes
	Sinking Precharge and Enable Inputs - using internal power supply 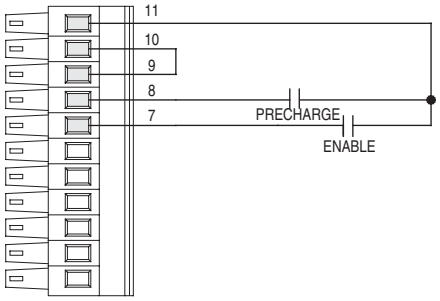 	**Enable** - In sinking configuration. this circuit must connect to 24V DC return for drive to run. **Precharge** Precharge control is used in common bus configurations and is not required for AC fed drives. If precharge control is not required, reprogram Par 838 [DigIn 1 Sel] to a value of zero or replace the contact shown with a jumper from Terminal 8 to Terminal 11. If precharge is needed, in sinking configuration, this circuit must connect to 24V DC return for drive to complete the precharge cycle.
	Sinking Precharge and Enable Inputs - using external power supply 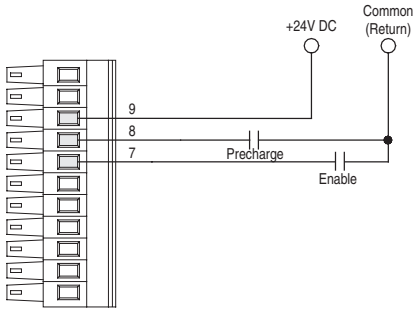 	
Digital Outputs - 24V DC outputs 25 mA maximum per output	Digital Output 1 Indicating Alarm and Digital Output 2 Indicating Fault - in sourcing configuration 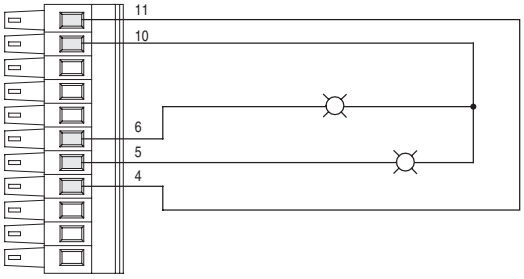 	• Link Parameter 155 [Logic Status], the source, to Parameter 843 [DigOut 1 Data], the sink • Set Parameter 844 [DigOut 1 Bit] to a value of eight, so that parameter 155 [Logic Status] / bit 8 “Alarm” will control the output • Link Parameter 155 [Logic Status], the source, to Parameter 845 [DigOut 2 Data], the sink Set Parameter 846 [DigOut 2 Bit] to a value of seven, so that Parameter 155 [Logic Status] / bit 7 [Faulted] will control the output
Digital Output - 24V DC output 25 mA maximum per output. If one (1) output is configured in sinking, the other output is not available.	Digital Output 1 Indicating Alarm Fault - in sinking configuration 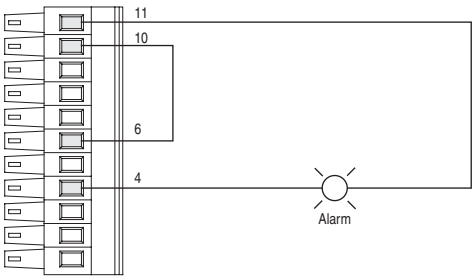 	• Link Parameter 155 [Logic Status], the source, to Parameter 843 [DigOut 1 Data], the sink Set Parameter 844 [DigOut 1 Bit] to a value of 8, so that Parameter 155 [Logic Status] / bit 8 “Alarm” will control the output

Table 1.L TB1 - Row B (Bottom) Terminals

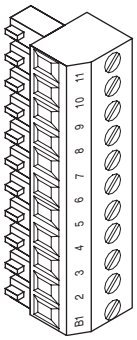

Terminal	Signal	Description	Related Parameter
B11	Analog Input #1 (-)	+/-10.0V DC or +/-1.0V DC bipolar, differential input. (1) 13 bit + sign, 20k ohm input impedance	800, 802, 803, 804, 805
B10	Analog Input #1 (+)		
B9	Analog Input Shield	Optional connection point for analog input shield. (2)	
B8	Analog Input #2 (-)	+/-10.0V DC or +/-1.0V DC bipolar, differential input. (1) 13 bit + sign, 20k ohm input impedance	806, 808, 809, 810, 811
B7	Analog Input #2 (+)		
B6	Analog Output #1 (+)	+/-10.0V DCDC bipolar, differential output, 11 bit + sign, 2k ohm minimum load	812, 814, 815, 817, 818
B5	Analog Output #1 Return (-)		
B4	Analog Output Shield	Optional connection point for analog output shield. (2)	
B3	Analog Output #2 (+)	+/-10.0V DC bipolar, differential output, 11 bit + sign, 2k ohm minimum load	813, 819, 820, 822, 823,
B2	Analog Output #2 Return (-)		
B1	Analog Output Shield	Optional connection point for analog shields.	

(1) Refer to Analog Input Settings on page 1-32 for necessary dip switch settings.

(2) Analog shields should connect to common at the signal source, if possible. Shields for signals from ungrounded devices, such as analog tachometers, should connect to an analog shield terminal point at the drive.

Table 1.M TB1 - Row B (Bottom) Wiring Examples

Input/Output	Connection Example	Required Parameter Changes
Analog Inputs +/-10V DC or +/-1.0V DC (DIP switch selectable) Terminate shields at the analog source if analog common is available Used for Speed Reference and Speed Trim	Analog Inputs for Speed Reference and Speed Trim - shield terminated at source 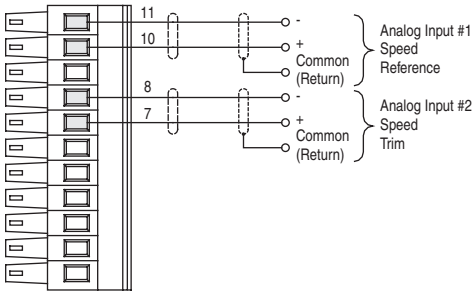 	**Using Analog In1 as 0-10V speed reference** • Adjust Parameter 803 [Anlg In1 Offset] so that the minimum analog signal creates the minimum speed reference (if the minimum input is 0V DC and the minimum speed reference is zero, enter a value of zero) • Adjust the Parameter 802 [Anlg In1 Scale] so that the maximum analog signal creates the maximum speed reference (if the maximum input is 10V DC and the maximum speed reference is motor base speed, enter a value of 0.1) • Send the data to the Speed Reference parameter Par 10 [Speed Ref 1] (the destination) linked to Par 800 [Anlg In1 Data] (the source) • Select Ref 1 as the active speed ref Par 16 [Speed Ref Sel] = 1 • Par 153 [Control Options], bit 0 = 0 Unipolar Speed Reference”
Analog Outputs +/-10V DC or +/-1.0V DC Used to drive analog meters displaying speed and current	Analog Inputs for Speed Reference and Speed Trim - shield terminated at drive 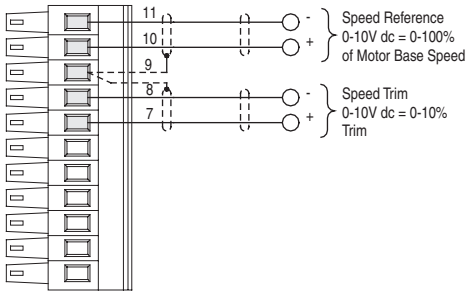 	**Using Analog In2 as -10 to +10V speed trim @ 10%:** • Adjust Parameter 809 [Anlg In2 Offset] so that the minimum analog signal creates the minimum speed trim (if the minimum input is 0V DC and the minimum trim is zero, enter a value of zero) • Adjust Parameter 808 [Anlg In2 Scale] so that the maximum analog signal creates the maximum speed trim (if the maximum input is 10V DC and the maximum speed trim is 10%, enter a value of 0.01) • Send the data to the speed Reference parameter Par 12 [Speed Ref 2] (the destination) linked to Par 806 [Anlg In2 Data] (the source) • Select Ref 1 as the active speed ref and Ref 2 as trim [Speed Ref Sel] = 3
Analog Outputs +/-10V DC	Analog Outputs Indicating Motor Speed and Motor Current 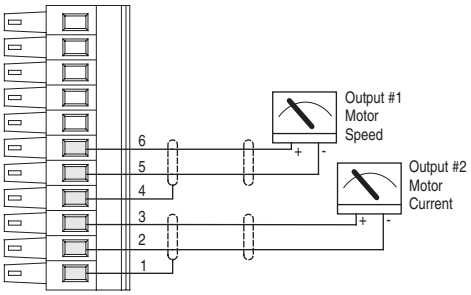 	**Using Analog Out 1, -10V to +10V to meter Motor RPM and direction:** • Adjust Parameter 812 [Anlg Out1 Offset] so that minimum speed creates a minimum signal (if the minimum speed is zero and the minimum signal is zero, enter a zero) • Adjust Parameter 817 [Anlg Out1 Scale] so that the maximum speed creates a maximum signal (if the maximum speed is 100% of motor base speed and the maximum signal is 10V DC, enter a value of 0.1) • Send the data to the Analog Output Par 815 [Anlg Out1 Real] (the destination) linked to Par 300 [Motor Spd Fdbk] (the source) **Using Analog Out 2, -10V to +10V to meter Motor Current** • Adjust Parameter 813 [Anlg Out2 Offset] so that minimum current creates a minimum signal (if the minimum current is zero and the minimum signal is zero, enter a zero) • Adjust Parameter 822 [Anlg Out2 Scale] so that the maximum current creates a maximum signal (if the maximum current is 200% of motor NP FLA and the maximum signal is 10V DC, enter a value of 2.0) • Send the data to the Analog Output Par 820 [Anlg Out2 Real] (the destination) linked to Par 308 [Output Current] (the source) • Scale the Output to the source parameter Par 822 [Anlg Out2 Scale] = xx (Par2 [Motor NP FLA]/10V Output

Table 1.N TB2 - Row T (Top) Terminals

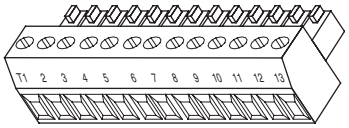

Terminal	Signal	Description	Related Parameter
T13	Encoder Signal A	Primary encoder interface. 5 or 12V DC switch selectable [1], Nominal current draw per channel @ 12V DC 45 mA, @5V DC 32 mA Maximum input frequency for Encoders 0 & 1 is 500 kHz.	222, 230, 231, 232, 233, 234, 235, 236, 237, 238
T12	Encoder Signal Not A		
T11	Encoder Signal B		
T10	Encoder Signal Not B		
T9	Encoder Signal Z		
T8	Encoder Signal Not Z		
T7	Shield	Connection point for encoder shield.	
T6	Digital Input #2	High speed 12-24V DC sinking digital input.	824, 830, 831, 832, 833, 839
T5	Digital Input #2 Return		
T4	Digital Input #3	High speed 12-24V DC sinking digital input.	824, 834, 835, 836, 837, 840
T3	Digital Input #3 Return		
T2	Power Supply +12V DC (A) (+)	5/12V DC power supply for primary encoder interface and high speed inputs. Rating 300 mA[2] [3]	
T1	Power Supply +12V DC Return (A) (-)		

(1) Refer to Encoder Input Settings on page 1-32 for necessary dip switch settings.

(2) This power supply supports only the primary encoder interface and digital inputs. Do not use it to power circuits outside of the drive.

(3) To enable 5V supply, set Jumper J6 (located in the Main Control Board) to positions T2 and T3. Default 12V supply is set to T1 and T2.

Table 1.O TB2 - Row T (Top) Wiring Examples

Input/Output	Connection Examples	Required Parameter Changes
Primary Encoder Interface - Supports 12V DC differential encoders with internal power supply. 5V DC differential encoders may require external power supply and special jumper settings. Refer to Main Control Board I/O Configuration Settings on page 1-32 for external power supply and jumper settings. For 5V DC differential encoders with internal power supply, set Jumper J6 to positions T2 and T3.	Primary Encoder - using internal power supply 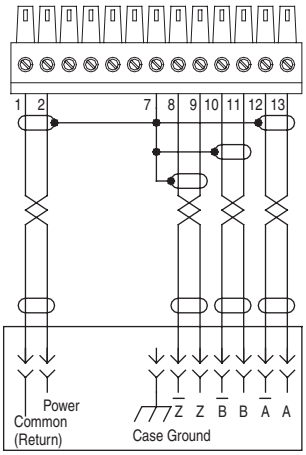 	• Set the value of Parameter 222 [Motor Fdbk Sel] to a value of 0 - Encoder 0, so the drive will use this encoder as the primary motor speed feedback device. • Set the value of Parameter 232 [Encoder0 PPR] to match the encoder's resolution.
	Primary Encoder - using external power supply 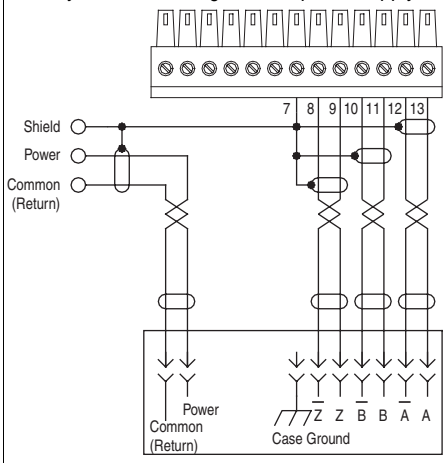 	

Table 1.O TB2 - Row T (Top) Wiring Examples

Input/Output	Connection Examples — 3-Wire Control	Required Parameter Changes
High Speed Inputs 12 or 24V DC	Sourcing High Speed Inputs, Used for 3 Wire Control - using the internal power supply 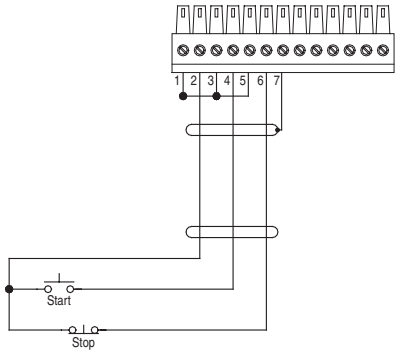 	• Set the value of Parameter 839 [DigIn2 Sel] to a value of 1 - Normal Stop • Set the value of Parameter 840 [DigIn3 Sel] to a value of 2 - Start • Set Parameter 153 [Control Options] / bit 8 “3WireControl”
	Sourcing High Speed Inputs, Used for 3 Wire Control - using an external power supply 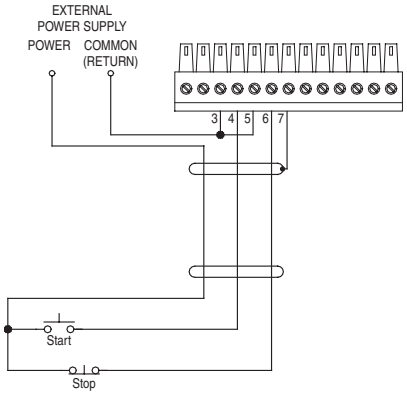 	**Note:** +12V and +24V are also available from TB1 Top 10 & 11.

Table 1.O TB2 - Row T (Top) Wiring Examples

Input/Output	Connection Examples — 2-Wire Control	Required Parameter Changes
High Speed Inputs 12 or 24V DC	Sourcing High Speed Inputs, Used for 2 Wire Control - using the internal power supply 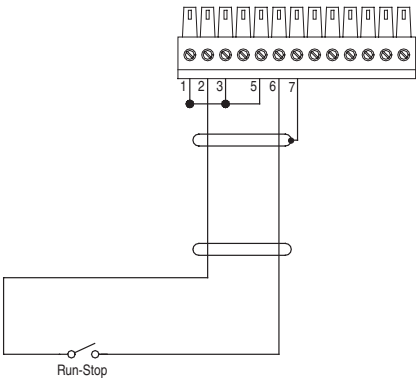 	• Set the value of Parameter 839 [DigIn2 Sel] to a value of 3 - Run • Set Parameter 153 [Control Options], bit 9 “2W Coast Stop” to make the drive coast stop when input 2 goes low • Reset Parameter 153 [Control Options], bit 9 “2W Coast Stop” to make the drive ramp stop when input 2 goes low • Reset Parameter 153 [Control Options], bit 8 “3Wire Control” for two wire control
	Sourcing High Speed Inputs, Used for 2 Wire Control - using an external power supply 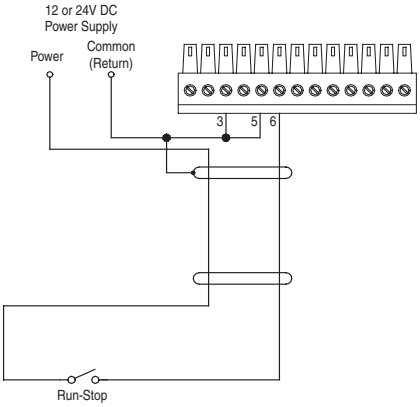 	**Note:** +12V and +24V are also available from TB1 Top 10 & 11.

Table 1.P TB2 - Row B (Bottom) Terminals

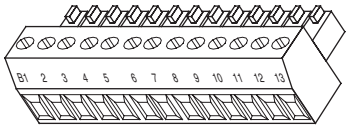

Terminal	Signal	Description	Related Parameter
B13	Encoder Signal A	Secondary encoder interface. 5 or 12V DC switch selectable [1], Nominal current draw per channel @ 12V DC 45 mA, @5V DC 32 mA Maximum input frequency for Encoders 0 & 1 is 500 kHz.	222, 240, 241, 242, 243, 244, 245, 246, 247, 248
B12	Encoder Signal Not A		
B11	Encoder Signal B		
B10	Encoder Signal Not B		
B9	Encoder Signal Z		
B8	Encoder Signal Not Z		
B7	Shield	Connection point for encoder shield.	
B6	Unused		
B5	Relay Output	Relay contact output. Rating: 5A @ 24V DC Resistive, 2A 24V DC Inductive	824, 841, 842
B4	Relay Output Return		
B3	Unused		
B2	Power Supply +12V DC (B) (+)	15/2V DC power supply for secondary encoder interface. Rating 300 mA[2] [3]	
B1	Power Supply +12V DC Return (B) (-)		

(1) Refer to Encoder Input Settings on page 1-32 for necessary dip switch settings.

(2) This power supply supports only the secondary encoder interface. Do not use it to power circuits outside of the drive

(3) To enable 5V supply, set Jumper J6 (located in the Main Control Board) to positions T2 and T3. Default 12V supply is set to T1 and T2.

Table 1.Q TB2 - Row B (Bottom) Wiring Examples

Input/Output	Connection Example	Required Parameter Changes
Secondary Encoder Interface - Supports 12V DC differential encoders with internal power supply. 5V DC differential encoders require external power supply and special jumper settings. Refer to Main Control Board I/O Configuration Settings on page 1-32 for external power supply and jumper settings. For 5V DC differential encoders with internal power supply, set Jumper J6 to positions T2 and T3.	Secondary Encoder - using internal power supply 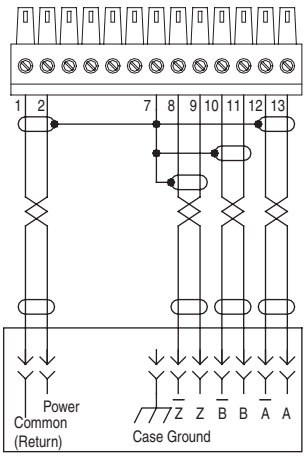 	• Set the value of Parameter 222 [Motor Fdbk Sel] to a value of 1 - Encoder 1, so the drive will use this encoder as the primary motor speed feedback device • Set the value of Parameter 242 [Encoder1 PPR] to match the encoder's resolution
	Secondary Encoder - using external power supply 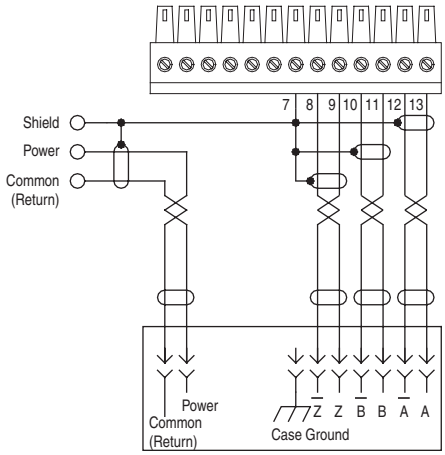 	
Auxiliary Output - Relay contact output	Auxiliary Output, Used to Indicate Running 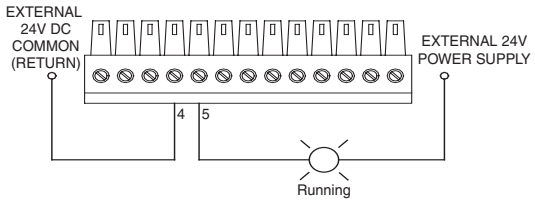 	• Link Parameter 155 [Logic Status], the source, to Parameter 841 [Relay Out Data], the sink • Set Parameter 842 [Relay Out Bit] to a value of one, so that Parameter 155 [Logic Status] / bit 1 "Running" will control the output.

Main Control Board I/O Configuration Settings

Figure 18 Main Control Board Dip Switches

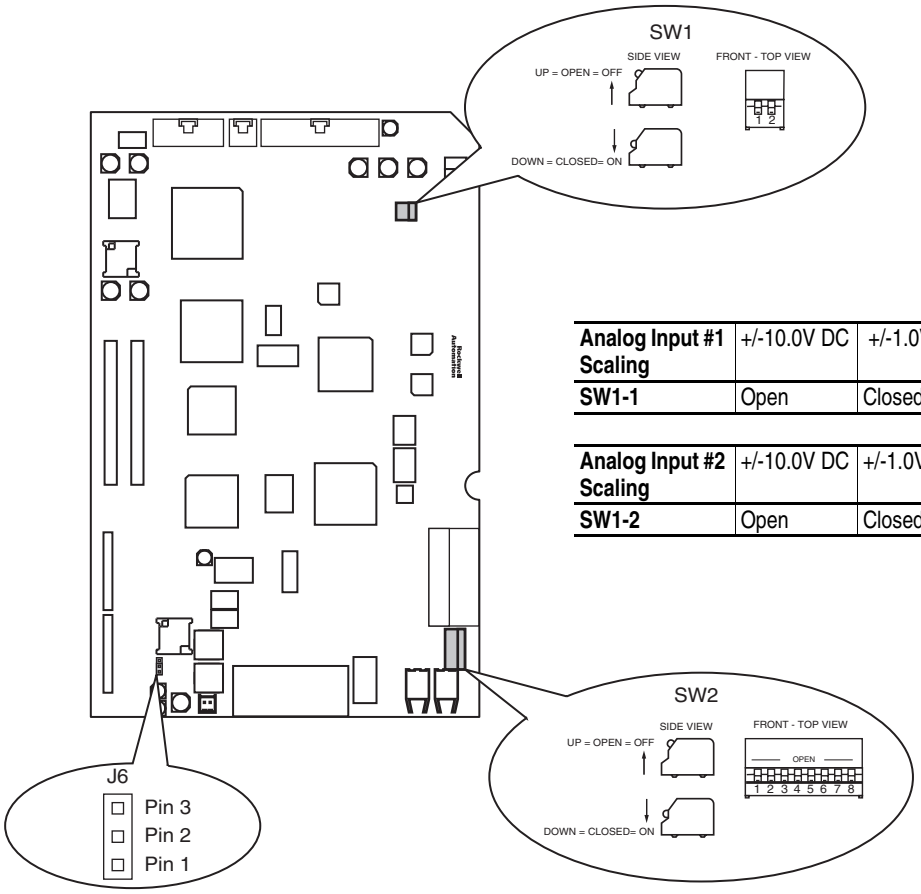

Analog Input #1 Scaling	+/-10.0V DC	+/-1.0V DC
SW1-1	Open	Closed

Analog Input #2 Scaling	+/-10.0V DC	+/-1.0V DC
SW1-2	Open	Closed

Encoder Power Supply Voltage	Jumper Position
5V DC	2-3
12V DC	1-2

Primary Encoder	SW2-2	SW2-4	SW2-6
5V DC Operation	Closed	Closed	Closed
12V DC Operation	Open	Open	Open

Secondary Encoder	SW2-1	SW2-3	SW2-5
5V DC Operation	Closed	Closed	Closed
12V DC Operation	Open	Open	Open

Analog Input Settings

Switch SW1-1 configures the scaling of Analog Input #1. Switch SW1-2 configures the scaling of Analog Input #2. Open the switch for +/-10.0V DC operation. Close the switch for +/-1.0V DC operation.

Encoder Input Settings

Dip switch SW2 on the main control board configures the encoder inputs for 5V DC or 12V DC operation. Switches SW2-2, 4, and 6 are for the primary encoder. Set these switches to match the encoder output specifications. Open these switches for 12V DC operation, close them for 5V DC operation.

Switches SW2-1, 3, and 5 are for the secondary encoder. Set these switches to match the encoder output specifications. Open these switches for 12V DC operation, close them for 5V DC operation.

Connecting SynchLink

SynchLink provides high-speed synchronization and communication between multiple PowerFlex 700S drives (or other products with SynchLink capability).

Refer to *The SynchLink Design Guide,* publication # 1756-TD008 when planning and connecting the SynchLink network.

Class 1 LED Product

ATTENTION: Hazard of permanent eye damage exists when using optical transmission equipment. This product emits intense light and invisible radiation. Do not look into module ports or fiber optic cable connectors.

Figure 1.1 SynchLink Connections

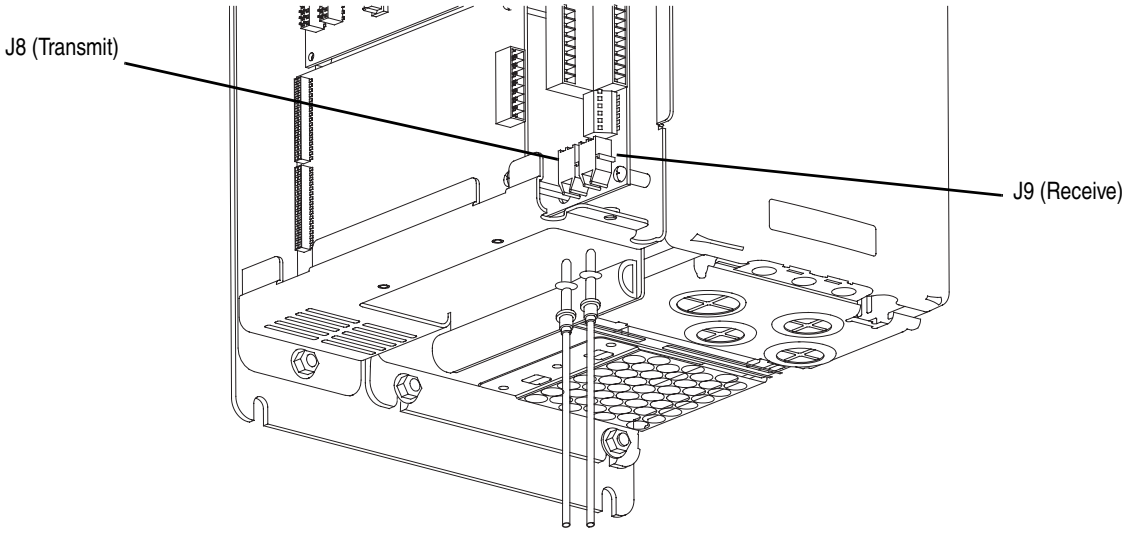

Connect cables to J9 (receive) and J8 (transmit) connectors on the bottom of the Main Control Board. Push the plug into the socket until it produces an audible click.

Important: Do not overtighten tie-wraps.

Table 1.S SynchLink Cables and Accessories

Description	Cat. No.
2 x 25 cm Fiber Optic Link	1403-CF000
2 x 1 M Fiber Optic Link	1403-CF001
2 x 3 M Fiber Optic Link	1403-CF003
2 x 5 M Fiber Optic Link	1403-CF005
10 M Fiber Optic Link	1403-CF010
20 M Fiber Optic Link	1403-CF020
50 M Fiber Optic Link	1403-CF050
100 M Fiber Optic Link	1403-CF100
250 M Fiber Optic Link	1403-CF250
500 M Fiber Optic Bulk	1403-CFBLK
SynchLink Fiber-Hub, 1 input, Base	1751-SLBA
SynchLink Fiber-Hub, 4 output, “Star” Splitter	1751-SL4SP
SynchLink Bypass Switch	1751-SLBP/A

Table 1.T Fiber Optic Cable Assembly

Specification	
Connecting Cables	200/230 micron HCS (Hard Clad Silica) • Versalink V-System • Lucent Technologies, • Specialty Fibers Technology Division
Maximum Cable Length	300 meters with no more than one splice or one adapter
Minimum Cable Length	1 meter
Minimum inside bend radius	25.4mm (1 in.) Any bends with a shorter inside radius can permanently damage the fiber optic cable. Signal attention increases with decreased inside bend radius.
Operating Wavelength	650 nm (Red)
Data Rate	5 Mbps
Maximum Node Count	• 10 - Daisy Chain • 256 - Star Configuration

CE Conformity

Conformity with the Low Voltage (LV) Directive and Electromagnetic Compatibility (EMC) Directive has been demonstrated using harmonized European Norm (EN) standards published in the Official Journal of the European Communities. PowerFlex Drives comply with the EN standards listed below when installed according to the User and Reference Manual.

Declarations of Conformity are available online at:
http://www.ab.com/certification/ce/docs.

Low Voltage Directive (73/23/EEC)

- EN50178 Electronic equipment for use in power installations.

EMC Directive (89/336/EEC)

- EN61800-3 Adjustable speed electrical power drive systems Part 3: EMC product standard including specific test methods.

General Notes

- If the adhesive label is removed from the top of the drive, the drive must be installed in an enclosure with side openings less than 12.5 mm (0.5 in.) and top openings less than 1.0 mm (0.04 in.) to maintain compliance with the LV Directive.
- The motor cable should be kept as short as possible in order to avoid electromagnetic emission as well as capacitive currents.
- Use of line filters in ungrounded systems is not recommended.
- PowerFlex drives may cause radio frequency interference if used in a residential or domestic environment. The user is required to take measures to prevent interference, in addition to the essential requirements for CE compliance listed below, if necessary.
- Conformity of the drive with CE EMC requirements does not guarantee an entire machine or installation complies with CE EMC requirements. Many factors can influence total machine/installation compliance.
- PowerFlex drives can generate conducted low frequency disturbances (harmonic emissions) on the AC supply system. More information regarding harmonic emissions can be found in the *PowerFlex Reference Manual Vol. 2*.

Essential Requirements for CE Compliance

Conditions 1-6 listed below must be satisfied for PowerFlex drives to meet the requirements of EN61800-3.

3. Standard PowerFlex 700S CE compatible Drive.
4. Review important precautions/attentions statements throughout this document before installing drive.
5. Grounding as described on page 1-4.
6. Output power, control (I/O) and signal wiring must be braided, shield cable with a coverage of 75% or better, metal conduit or equivalent attenuation.
7. All shielded cables should terminate with proper shielded connector.
8. Conditions in Table 1.U on page 36

Table 1.U PowerFlex 700S EN61800-3 EMC Compatibility(1)

Frame(s)	Second Environment	First Environment Restricted Distribution	
	Restrict Motor Cable to 30 m (98 ft.)	*Restrict Motor Cable to 150 m (492 ft.)*	
	Any Drive and Option	*Any Drive and Option*	*External Filter Required*
1 - 6	✔	✔	✔

(1) External filters for First Environment installations and increasing motor cable lengths in Second Environment installations are available. Roxburgh models KMFA (RF3 for UL installations) and MIF or Schaffner FN3258 and FN258 models are recommended. Refer to http://www.deltron-emcon.com and http://www.mtecorp.com (USA) or http://www.schaffner.com, respectively.

Start-Up

This chapter describes how you start-up the PowerFlex 700S Drive. Refer to Appendix D for a brief description of the HIM (Human Interface Module).

For Information on ...	See Page...
Prepare for Drive Start-Up	2-1
Assisted Start-Up	2-3

ATTENTION: Power must be applied to the drive to perform the following start-up procedure. Some of the voltages present are at incoming line potential. To avoid electric shock hazard or damage to equipment, only qualified service personnel should perform the following procedure. Thoroughly read and understand the procedure before beginning. If an event does not occur while performing this procedure, **Do Not Proceed**. **Remove Power** including user supplied control voltages. User supplied voltages may exist even when main AC power is not applied to then drive. Correct the malfunction before continuing.

Prepare for Drive Start-Up

Before Applying Power to the Drive

Important: If you have a DriveLogix application, you must first connect the battery before starting this section.

❏ **1.** Confirm that motor wires are connected to the correct terminals and are secure. Confirm Frame 5 transformer connections (refer to page 1-9).

❏ **2.** Confirm that encoder wires are connected to the correct terminals and are secure.

❏ **3.** Confirm that all control inputs are connected to the correct terminals and are secure.

❏ **4.** Verify that AC line power at the disconnect device is within the rated value of the drive.

❏ **5.** Verify that control power voltage is correct.

The remainder of this procedure requires that a HIM be installed. If an operator interface is not available, remote devices should be used to start-up the drive.

Applying Power to the Drive

❑ **6.** Apply AC power and control voltages to the drive. Examine the *Power (PWR)* LED.

Steady Green
Power has been applied to the drive and no faults are present.

❑ **7.** Examine the *Status (STS)* LED. Verify that it is flashing green. If it is not in this state, check the following possible causes and take the necessary corrective action.

Flashing Yellow
A run inhibit exists in the drive. Refer to Table 4.B on page 4-3 to correct the problem.

Flashing Red
A fault has occurred. Refer to Fault Descriptions on page 4-4 for drive faults and actions to correct the problem.

If any digital input is configured to Stop – CF (CF = Clear Fault) or Enable, verify that signals are present or the drive will not start. Refer to Table 4.B on page 4-3 for a list of potential digital input conflicts.

If a fault code appears, refer to Fault Descriptions on page 4-4.

If the STS LED is not flashing green at this point, refer to the Status Indicators descriptions in Table 4.A on page 4-2.

❑ **8.** Proceed to Assisted Start-Up on page 2-3.

Assisted Start-Up

This routine prompts you for information needed to start-up a drive for most applications, such as line and motor data, commonly adjusted parameters and I/O.

Important: This start-up routine requires a HIM. If the drive is configured for 2-wire control, the HIM installed on the drive will also act as a 2-wire device. In 2-wire mode, the drive will start when the HIM "Start" is pressed and stop when the HIM "Start" is released. The recommended mode of use for the Start-Up Routine is 3-wire control, Parameter 153 [Control Options], Bit 8 set to "1".

The assisted start-up routine asks simple yes or no questions and prompts you to input required information. Access Assisted Start-Up by selecting "Start-Up" from the Main Menu.

Step	Key(s)	Example LCD Displays
1. To exit the User Display screen, Press Esc.	Esc	F Stopped Auto 0.0 RPM 0.0 DC Bus V 0.0 Output C
1. In the Main Menu, use the Down Arrow to scroll to "Start Up" 2. Press Enter. **TIP:** Throughout the Start-Up Routine many screens have more selection than shown. Use the arrow keys to scroll through all the menu options.	▲ ▼ ↵	F Stopped Auto 0.0 RPM Main Menu: Diagnostics Parameter Device Select
1. Follow the instructions on the screen to complete the Start-Up.	↵	PowerFlex 700S Start-Up The Start-Up routine sets up the drive for basic operation. Push Enter.

Important: If using a HIM the following functions are not available.

- Alt-Man
- Alt-Lang
- Alt-SMART

Table 2.A Start-Up Menu

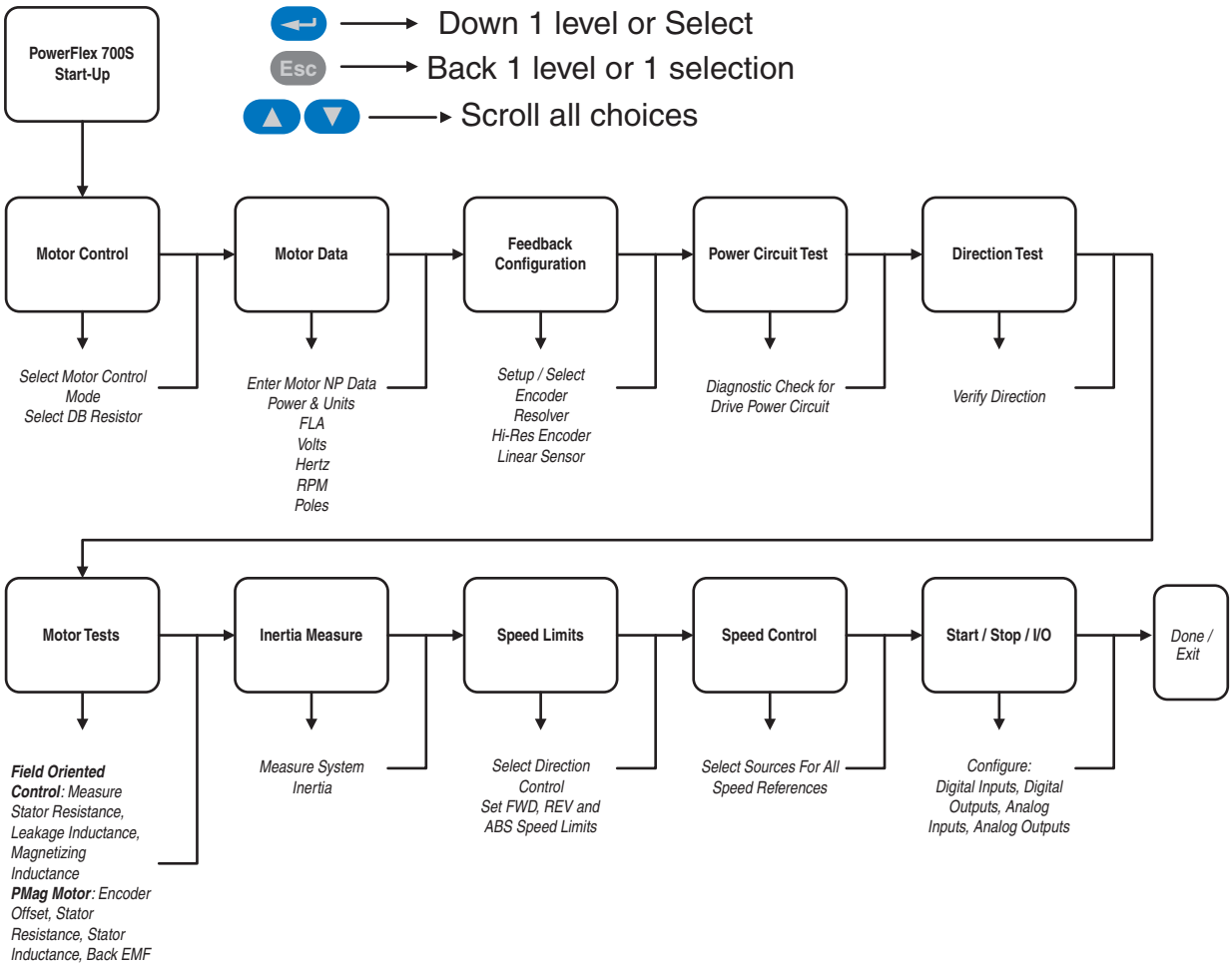

Note: In 2-wire mode, the drive will start when the HIM "Start" is pressed and stop when the HIM "Start" is released. The recommended mode of use for the Start-Up Routine is 3-wire control, Parameter 153 [Control Options], Bit 8 set to "1".

Programming and Parameters

Chapter 3 provides a complete listing and description of the PowerFlex 700S parameters. The parameters can be programmed (viewed/edited) using a HIM (Human Interface Module). As an alternative, programming can also be performed using DriveTools™ software and a personal computer.

For information on...	See page
About Parameters	3-1
How Parameters are Organized	3-3
Parameter Data in Linear List Format	3-16
Parameter Cross Reference By Name	3-96

About Parameters

To configure a Drive module to operate in a specific way, drive parameters may have to be set. Three types of parameters exist:

- **ENUM Parameters**
  These parameters allow a selection from 2 or more items
- **Bit Parameters**
  These parameters have individual bits associated with features or conditions. If the bit is 0, the feature is off or the condition is false. If the bit is 1, the feature is on or the condition is true.
- **Numeric Parameters**
  These parameters have a single numeric value (i.e. 0.1 Volts).

The example on the following page shows how each parameter type is presented in this manual.

❶ No.	❷ Name / Description	❸ Values	Linkable	Read-Write	Data Type
151	**Logic Command** The controller-drive interface (as defined by the Controller Communication Format) sets bits to enable and disable various functions and algorithms. Bits that are changed here are reflected in Parameter 152 [Applied LogicCmd]. Note: Bits 4 through 9 in Logic Command are NOT recalled from Control EEprom. They will be cleared upon drive power up or following an EEprom recall operation.				
110	**Spd/Torq ModeSel** Selects the source for the drive torque reference.	Default: 1 "Speed Reg" Options: 0 "Zero Torque" 1 "Speed Reg" 2 "Torque Ref" 3 "Min Spd/Torq" 4 "Max Spd/Torq" 5 "Sum Spd/Torq" 6 "AbsMn Spd/Tq"			
4	**Motor NP RPM** Set to the motor nameplate rated RPM.	Units: RPM Default: Calculated Min/Max: 1/30000 Comm Scale: Parameter 4 [Motor NP RPM] = 1.0		✓	16-bit Integer

Options	Reserved	Reserved	PositionEnbl	ProcsTrim En	Frict Comp	Inertia Comp	Sys Inert En	Mtr Inert En	PM Offset En	Dir Sel En	Pwr Diag En	MC Atune En	Time Axis En	TachLoss Rst	Spd S Crv En	SpdRamp Dsbl
Default	0	0	0	0	0	0	0	0	0	0	0	0	0	0	0	0
Bit	15	14	13	12	11	10	9	8	7	6	5	4	3	2	1	0

0 = True
1 = False

No.	Name / Description		
❶	No. - Parameter Number		
	Parameter value cannot be changed until the drive is stopped.		
❷	Name - Parameter name as it appears in DriveExecutive software.		
	Description - Brief description of parameter function.		
❸	Values - Define the various operating characteristics of the parameter. *There are 3 types of Values.*		
	ENUM	Default:	Lists the value assigned at the factory.
		Options:	Displays the selections available.
	Bit	Default:	Lists the value assigned at the factory.
		Options:	Displays the selections available.
	Numeric	Default	Lists the value assigned at the factory.
		Min.	Displays lowest possible setting.
		Max.	Displays highest possible setting.
		Type	Indicates if parameter is linkable, read-write, read-only, and data type (i.e. integer, floating point, boolean).
		Comm Scale:	Value sent from Controller or Comm Device = Drive Parameter Value x Comm Scale

How Parameters are Organized

DriveExecutive programming software displays parameters in “Linear List” or “File Group Parameter” format. Viewing the parameters in “File Group Parameter” format simplifies programming by grouping parameters that are used for similar functions. There are twelve files. Each file is divided into multiple groups of parameters.

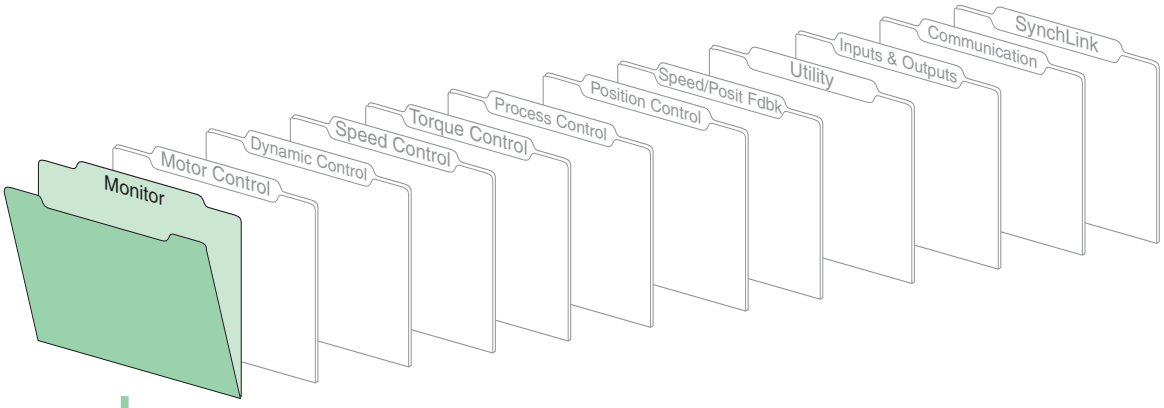

Metering

300	Motor Spd Fdbk
72	Scaled Spd Fdbk
762	Mtr Posit Fdbk
310	Output Freq
307	Output Voltage
308	Output Current
297	Output Curr Disp
311	Output Power
309	% Motor Flux
547	Estimated Torque
306	DC Bus Voltage
312	MotorFluxCurr FB
313	Heatsink Temp
345	Drive OL JnctTmp
824	Local I/O Status
168	StdDig I/O State
801	Anlg In1 Volts
807	Anlg In2 Volts
816	Anlg Out1 Volts
821	Anlg Out2 Volts
298	Elapsed Run Time
299	Elapsed MWHrs

Control Status

150	Logic State Mach
155	Logic Status
157	Logic Ctrl State
156	Run Inhibit Stat
166	Motor Ctrl Cmmd
167	Motor Ctrl Ackn
555	MC Status
346	Drive OL Status
159	DigIn ConfigStat
165	Test Status
317	SL System Time

Motor Ctrl Data

533	Stator Frequency
534	Iqs Command
434	Mtr Vds Base
435	Mtr Vqs Base
441	Vds Fdbk Filt
442	Vqs Fdbk Filt
541	Vqs Command
542	Vds Command
535	Iqs Command
537	Ids Command
539	Iqs Feedback
540	Ids Feedback

Drive Data

400	Rated Amps
401	Rated Volts
404	Dead Time
692	DPI Baud Rate
314	VPL Firmware Rev
315	VPL Build Number
527	MC Firmware Rev
526	MC Build Number
1001	SynchLink Rev
1002	SL System Rev

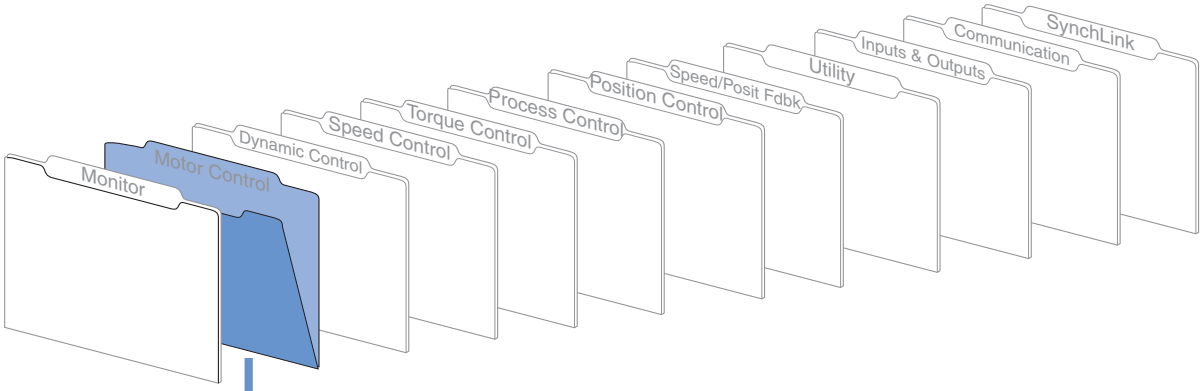

Motor Data

1	Motor NP Volts
2	Motor NP FLA
3	Motor NP Hertz
4	Motor NP RPM
5	Motor NP Power
6	Mtr NP Pwr Units
7	Motor Poles
8	Motor Inertia
9	Total Inertia
336	Service Factor

Drive Config

485	Motor Ctrl Mode
402	PWM Frequency
403	Voltage Class
405	Dead Time Comp
409	Line Undervolts
410	PreChrg TimeOut
411	PreChrg Control
510	FOC Mode Config
511	FOC2 Mode Config
514	Test Mode Config
512	PMag Mode Cnfg
505	PM TestWait Time
506	PM Test Idc Ramp
507	PM Test FreqRamp
508	PM Test Freq Ref
509	PM Test I Ref
424	Flux Ratio Ref

Tuning

423	Iqs Rate Limit
453	Iu Offset
454	Iw Offset
425	Flux Rate Limit
426	Flux Satur Coef
443	Flux Reg P Gain1
470	Flux Reg P Gain2
444	Flux Reg I Gain
500	Bus Util Limit
501	Torque En Dly
437	Vqs Max
438	Vds Max
439	Vqs Min
440	Vds Min
469	StatorInduc Gain
473	Freq Reg FF Gain
449	Freq Reg I Gain
450	Freq Reg P Gain
451	Freq Track Filt
474	Freq Reg We BW
475	Freq Reg Wr BW
447	Slip Reg P Gain
448	Slip Reg I Gain
446	Slip Gain Min
445	Slip Gain Max
476	Slip Gain Comp
472	PreCharge Delay
431	Test Current Ref
432	Test Freq Ref
433	Test Freq Rate
477	Est Theta Delay

Autotune Results

421	Iqs Integ Freq
422	Iqs Reg P Gain
429	Ids Integ Freq
430	Ids Reg P Gain
486	Rated Slip Freq
487	Motor NTC Coef
488	Flux Current
490	StatorInductance
491	StatorResistance
492	Leak Inductance
502	Rotor Resistance
503	Current Reg BW
504	PM AbsEncd Offst

PM Motor

427	PM Mtr CEMF Comp
520	PM Q Inductance
521	PM D Inductance
522	PM Stator Resist
523	PM Mtr CEMF Coef

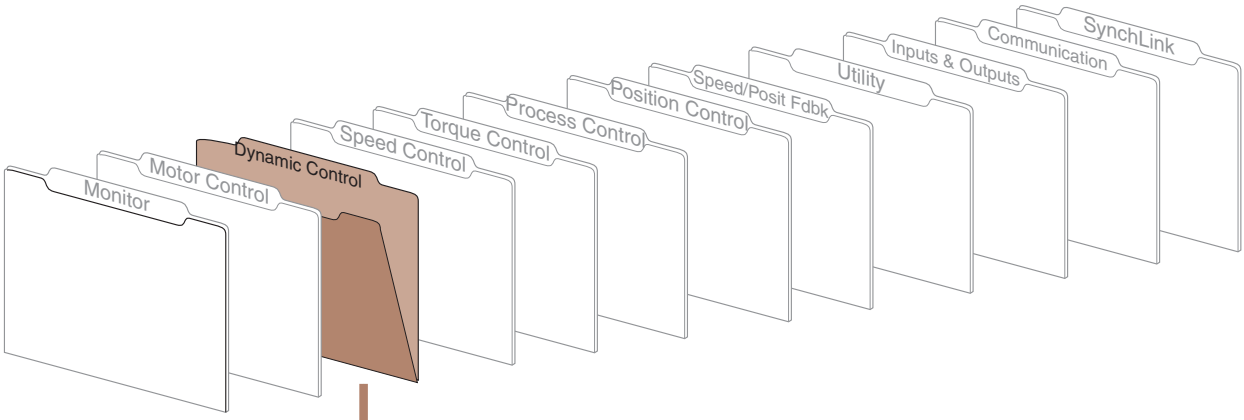

Configuration	
151	Logic Command
152	Applied LogicCmd
153	Control Options
158	Drive Logic Rslt
160	Zero Speed Lim
335	Abs OverSpd Lim

Overload	
337	OL OpnLp CurrLim
338	OL ClsLp CurrLim
339	Drive OL JnctTmp
340	Drive OL Status
343	Drive OL TP Sel
344	Drive OL TP Data

Stop/Brake Modes	
414	Brake/Bus Cnfg
415	BusReg/Brake Ref
416	Brake PulseWatts
417	Brake Watts
154	Stop Dwell Time

Power Loss	
406	Power Loss Mode
407	Power Loss Time
408	Power Loss Level

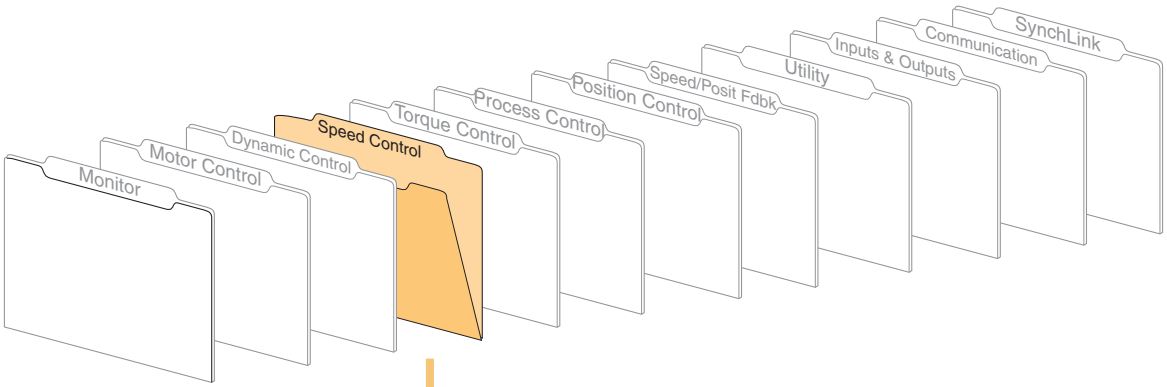

Reference

16	Speed Ref Sel
10	Speed Ref 1
11	Spd Ref1 Divide
12	Speed Ref 2
13	Spd Ref2 Multi
14	Speed Ref 4
15	Speed Ref 5
20	Speed Ref DPI
17	Jog Speed 1
18	Jog Speed 2
40	Selected Spd Ref
30	Rev Speed Limit
31	Fwd Speed Limit
41	Limited Spd Ref
32	Accel Time
33	Decel Time
42	Ramped Spd Ref
34	S Curve Time
43	S Curve Spd Ref
37	Spd Ref Bypass
35	SpdRef Filt Gain
36	SpdRef Filt BW
44	Filtered Spd Ref
38	Speed Ref Scale
46	Scaled Spd Ref
21	Speed Trim 1
47	Spd Trim1 SpdRef
45	Delayed Spd Ref
61	Virt Encoder EPR
62	Virt Encdr Posit
63	Virt Encdr Dlyed
56	Inertia SpeedRef
55	Speed Comp
57	InertiaAccelGain
58	InertiaDecelGain
59	Inertia Torq Add
60	DeltaSpeedScale
140	FricComp Spd Ref
141	FricComp Setup
142	FricComp Stick
143	FricComp Slip
144	FricComp Rated
145	FricComp TorqAdd

Regulator

47	Spd Trim1 SpdRef
22	Speed Trim 2
25	STrim2 Filt Gain
26	SpdTrim2 Filt BW
23	Speed Trim 3
24	SpdTrim 3 Scale
19	Atune Spd Ref
30	Rev Speed Limit
31	Fwd Speed Limit
301	Motor Speed Ref
300	Motor Spd Fdbk
93	SRegFB Filt Gain
94	SReg FB Filt BW
71	Filtered SpdFdbk
100	Speed Error
89	Spd Err Filt BW
85	Servo Lock Gain
84	SpdReg AntiBckup
80	Speed Reg Ctrl
81	Spd Reg P Gain
82	Spd Reg I Gain
87	SReg Torq Preset
8	Motor Inertia
9	Total Inertia
90	Spd Reg BW
97	Act Spd Reg BW
91	Spd Reg Damping
92	SpdReg P Gain Mx
101	SpdReg Integ Out
102	Spd Reg Pos Lim
103	Spd Reg Neg Lim
86	Spd Reg Droop
95	SRegOut FiltGain
96	SReg Out Filt BW
302	Spd Reg PI Out

Setpoint Monitor

171	Set Speed Lim
172	Setpt 1 Data
173	Setpt1 TripPoint
174	Setpt 1 Limit
175	Setpt 2 Data
176	Setpt2 TripPoint
177	Setpt 2 Limit

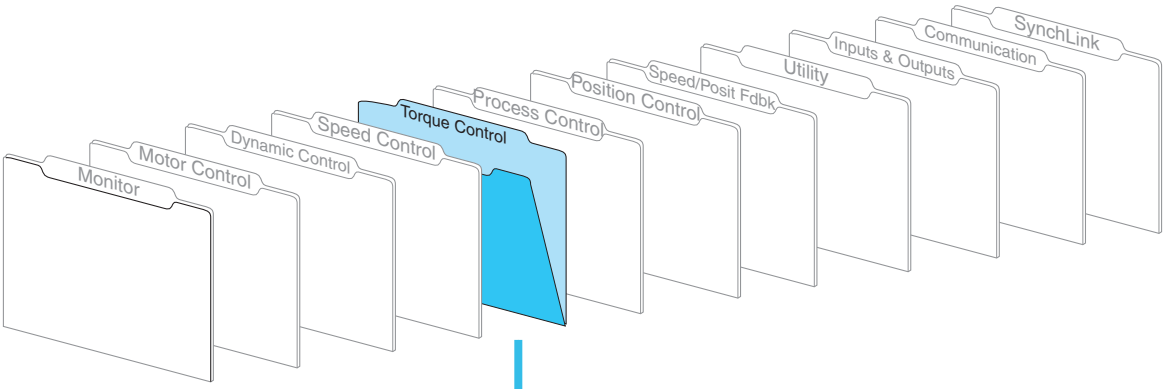

Torque	
110	Spd/Torq ModeSel
302	Spd Reg PI Out
59	Inertia Torq Add
145	FricComp TorqAdd
111	Torque Ref 1
112	Torq Ref1 Div
113	Torque Ref 2
114	Torq Ref2 Mult
115	Torque Trim
116	Torque Step
129	Atune Torq Ref
117	Notch Filt Mode
118	Notch Filt Freq
306	DC Bus Voltage
401	Rated Volts
127	Mtring Power Lim
128	Regen Power Lim
300	Motor Spd Fdbk
125	Torque Pos Limit
126	Torque Neg Limit
123	Torq PosLim Actl
124	Torq NegLim Actl
303	Motor Torque Ref

Current	
309	% Motor Flux
360	Min Flux
361	Flx LpassFilt BW
350	Iq Actual Ref
351	Iq Ref Trim
343	OL OpnLp CurrLim
356	Mtr Current Lim
352	Is Actual Lim
313	Heatsink Temp
345	Drive OL JnctTmp

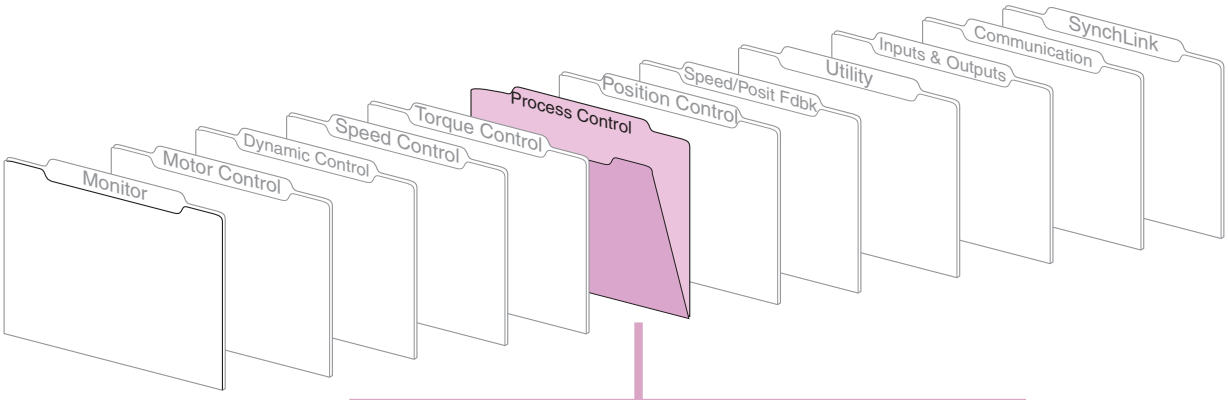

Process Config

183	PI Command
181	PI Reference
182	PI Feedback

Regulator

184	PI Lpass Filt BW
186	PI Prop Gain
185	PI Preload
187	PI Integ Time
188	PI Integ HLim
189	PI Integ LLim
190	PI Integ Output
191	PI High Limit
192	PI Lower Limit
180	PI Output

Limit Generator

200	Time Axis Rate
201	Time Axis Output
204	LimGen Y axis Mx
205	LimGen Y axis Mn
206	LimGen X axis In
207	Limit Gen Hi Out
208	Limit Gen Lo Out

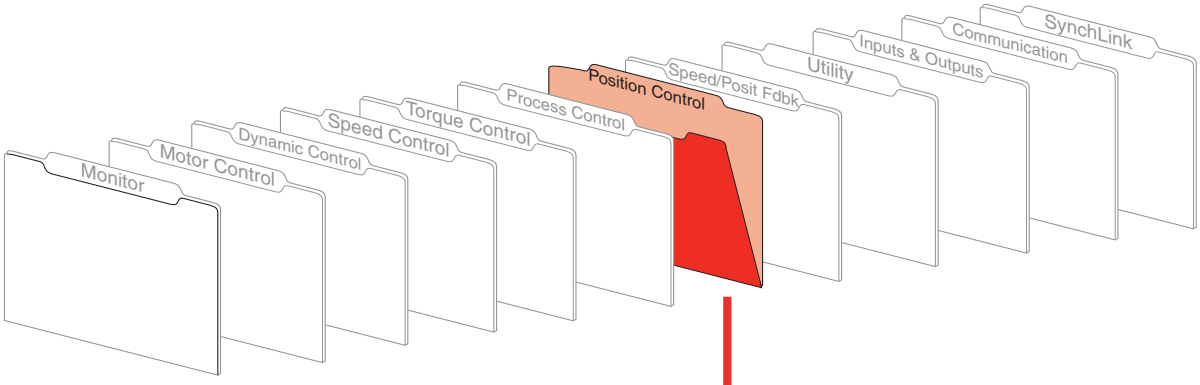

Position Config

740	Position Control
741	Position Status
742	Posit Ref Sel

Interp / Diret

743	Aux Posit Ref
745	PositRef EGR Mul
746	PositRef EGR Div
744	PositRef EGR Out
757	Abs Posit Offset
753	Posit Offset 1
754	Posit Offset 2
755	Posit Offset Spd
756	X Offst SpdFilt
747	Position Cmmd
762	Mtr Posit Fdbk
764	Posit Load Fdbk
766	Posit FB EGR Mul
767	Posit FB EGR Div
763	Act Motor Posit
765	Posit Actl Load
769	Position Error
768	PositReg P Gain
770	PositReg Integ
772	XReg Integ LoLim
773	XReg Integ HiLim
774	XReg Integ Out
771	PositReg Droop
775	XReg Spd LoLim
776	XReg Spd HiLim
318	Posit Spd Output

Point to Point

758	Pt-Pt Posit Ref
745	PositRef EGR Mul
746	PositRef EGR Div
744	PositRef EGR Out
753	Posit Offset 1
754	Posit Offset 2
755	Posit Offset Spd
756	X Offst SpdFilt
747	Position Cmmd
762	Mtr Posit Fdbk
763	Act Motor Posit
769	Position Error
768	PositReg P Gain
761	Pt-Pt Filt BW
759	Pt-Pt Accel Time
760	Pt-Pt Decel Time
775	XReg Spd LoLim
776	XReg Spd HiLim
318	Posit Spd Output

Posit Detection

784	Posit Detct1 In
785	Posit Detct2 In
780	PositDetct1 Stpt
781	PositDetct2 Stpt
769	Position Error
782	In Posit BW
783	In Posit Dwell

Sync Generator

786	Xsync Status
787	Xsync Gen Period
317	SL System Time
788	Xsync In 1
789	Xsync Out 1
790	Xsync In 2
791	Xsync Out 2
792	Xsync Out 2 Dly
793	Xsync In 3
794	Xsync Out 3

Posit Indexer

796	Posit Index Ctrl
797	Posit Index Step
798	PositIndexPreset
799	PositIndexOutput

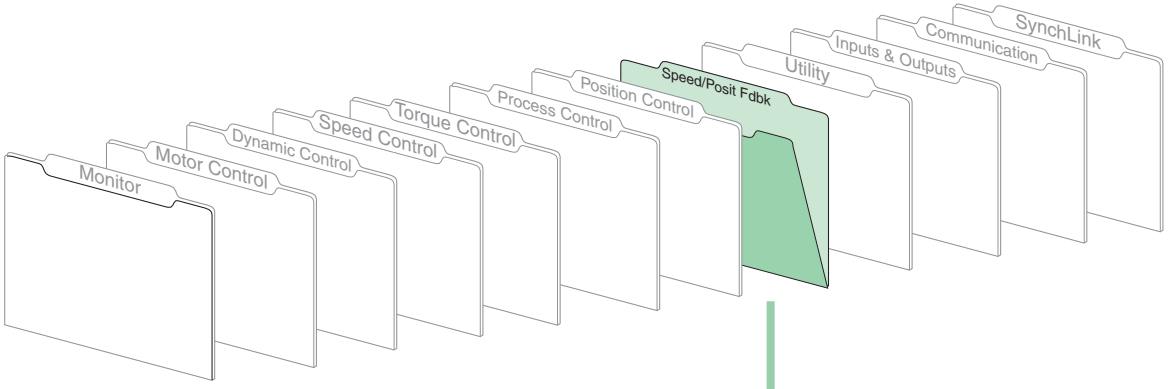

Feedback Config

72	Scaled Spd Fdbk
73	Spd Fdbk Scale
222	Motor Fdbk Sel
223	Virtual Edge/Rev
227	Spd Obs Trq Gain
220	Spd Observer BW
221	Load Estimate
300	Motor Spd Fdbk

Encoder Port 0

233	Encdr0 Config
234	Encdr0 Error
232	Encoder0 PPR
231	Encdr0 Spd Fdbk
230	Encdr0 Position
236	Port0 Regis Cnfg
237	Port0 Regis Ctrl
238	Port0 Regis Stat
235	Port0 Regis Ltch

Encoder Port 1

243	Encdr1 Config
244	Encdr1 Error
242	Encoder1 PPR
241	Encdr1 Spd Fdbk
240	Encdr1 Position
246	Port1 Regis Cnfg
247	Port1 Regis Ctrl
248	Port1 Regis Stat
245	Port1 Regis Ltch

Feedback Opt 0

249	Fdbk Option ID
250	FB Opt0 Posit

Calculated Fdbk

548	Est Speed Fdbk
74	Motor Spd Est
226	Virtual Edge/Rev
75	MtrSpd Est Posit
76	MtrSpd Simulated
70	MtrSpd Sim Posit

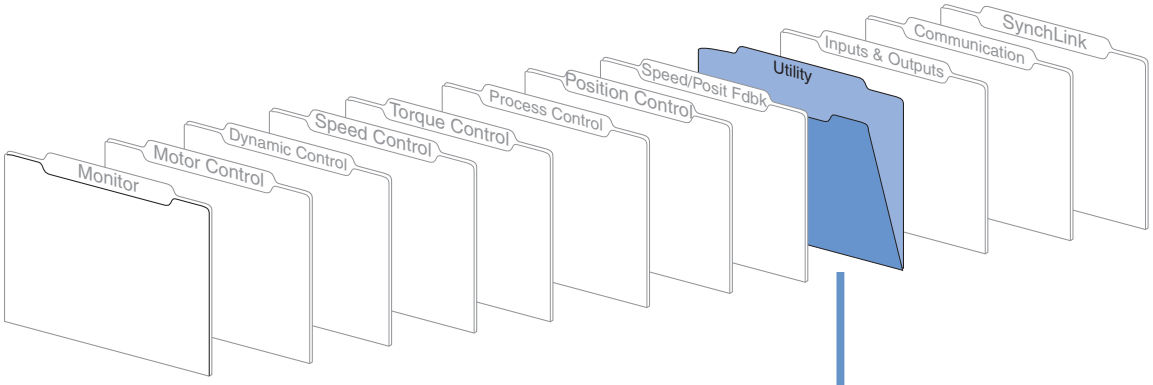

Fault/Alm Config

379	Ext Flt/Alm Cnfg
374	Motor Stall Cnfg
373	Motor Stall Time
382	MC Cmd Lim Cnfg
381	PreChrg Err Cnfg
393	BusUndervoltCnfg
394	VoltFdbkLossCnfg
376	Inv OL Pend Cnfg
377	Inv OL Trip Cnfg
372	Mtr OL Pend Cnfg
371	Mtr OL Trip Cnfg
375	Inv OT Pend Cnfg
369	Brake OL Cnfg
365	Encdr0 Loss Cnfg
366	Encdr1 Loss Cnfg
391	DPI CommLoss Cfg
392	NetLoss DPI Cnfg
383	SL CommLoss Data
384	SL CommLoss Cnfg
390	SL MultErr Cnfg
385	Lgx CommLossData
386	Lgx OutOfRunCnfg
387	Lgx Timeout Cnfg
388	Lgx Closed Cnfg
389	Lgx LinkChngCnfg

Peak Detection

210	PeakDtct Ctrl In
211	Peak Ctrl Status
212	PeakDtct1 In Int
213	PkDtct1 In Real
214	PeakDtct1 Preset
215	PeakDetect1 Out
216	PeakDtct2 In Int
217	PkDtct2 In Real
218	PeakDtct2 Preset
219	PeakDetect2 Out

Diagnostics

824	Local I/O Status
304	Limit Status
320	Exception Event1
321	Exception Event2
326	Alarm Status 1
327	Alarm Status 2
323	Fault Status 1
324	Fault Status 2
316	SynchLink Status
1228	SL Error History
1229	SL Error Status
1230	SL CRC Err Accum
1231	SL CRC Error
1234	SL BOF Err Accum
1232	SL BOF Error
1233	SL CRC Err Limit
1235	SL BOF Err Limit
550	MC Diag Status
551	MC Diag Done
552	MC Diag Error 1
553	MC Diag Error 2
554	MC Diag Error 3

Peak Detection

850	ParamAccessLevel
396	User Data Int 01
397	User Data Int 02
398	User Data Int 03
399	User Data Int 04
1300	User Data Int 05
1301	User Data Int 06
1315	UserData Real 01
1316	UserData Real 02
1317	UserData Real 03
1318	UserData Real 04
1319	UserData Real 05
1320	UserData Real 06

Test Points

161	Logic TP Sel
162	Logic TP Data
163	Stop Oper TP Sel
164	StopOper TP Data
544	MC TP Select
545	MC TP Value
546	MC TP Bit
412	Power EE TP Sel
413	Power EE TP Data
347	Drive OL TP Sel
348	Drive OL TP Data
50	Spd Ref TP Sel
51	Spd Ref TP RPM
52	Spd Ref TP Data
98	Spd Gain TP Sel
99	Spd Gain TP Data
108	Spd Reg TP Sel
109	Spd Reg TP Data
130	Torq Ref TP Sel
131	Torq Ref TP Data
363	Curr Ref TP Sel
364	Curr Ref TP Data
418	Brake TP Sel
419	Brake TP Data
77	Spd Fdbk TP Sel
78	Spd Fdbk TP RPM
79	Spd Fdbk TP Data
329	Fault TP Sel
330	Fault TP Data
193	PI TP Sel
194	PI TP Data
777	Posit TP Select
778	PositTP Data Int
779	PositTP DataReal
1226	SL Comm TP Sel
1227	SL Comm TP Data

Trending

1250	Trend Control
1251	Trend Status
1252	Trend State
1253	Trend Rate
1254	Trend TrigA Int
1255	Trend TrigA Real
1256	Trend TrigB Int
1257	Trend TrigB Real
1258	Trend Trig Data
1259	Trend Trig Bit
1260	Trend PreSamples
1264	Trend In1 Int
1265	Trend In1 Real
1266	Trend In2 Int
1267	Trend In2 Real
1268	Trend In3 Int
1269	Trend In3 Real
1270	Trend In4 Int
1271	Trend In4 Real
1280	Trend Marker Int
1281	Trend Mark Real
1283	TrendBuffPointer
1284	Trend Out1 Int
1285	Trend Out1 Real
1286	Trend Out2 Int
1287	Trend Out2 Real
1288	Trend Out3 Int
1289	Trend Out3 Real
1290	Trend Out4 Int
1291	Trend Out4 Real

User Function

1370	Switch Control
1371	SW Int 1 NO
1372	SW Int 1 NC
1373	SW Int 1 Output
1374	SW Real 1 NO
1375	SW Real 1 NC
1376	SW Real 1 Output

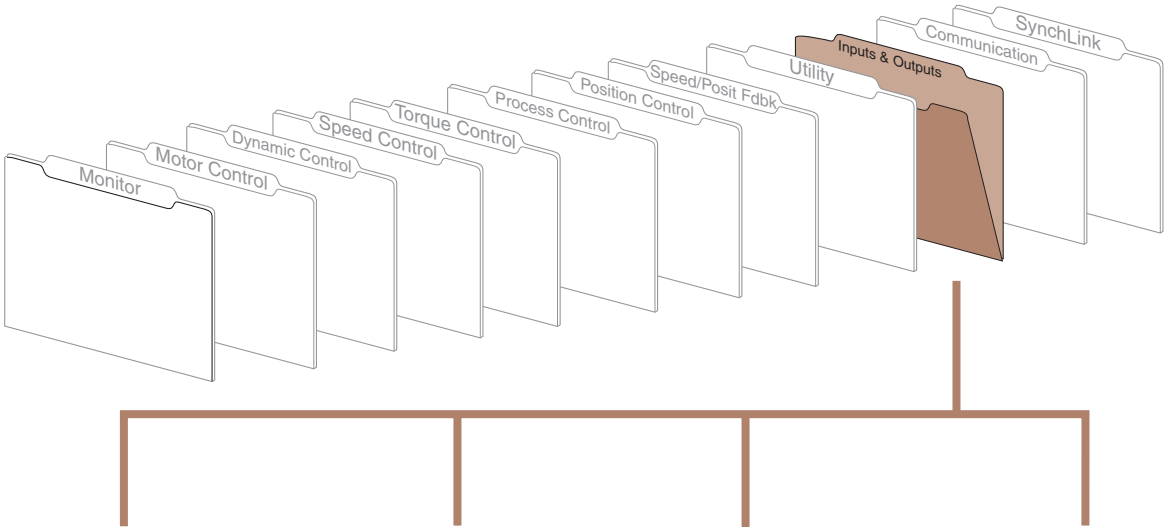

Analog Inputs	
800	Anlg In1 Data
802	Anlg In1 Scale
803	Anlg In1 Offset
804	AI 1 Filt Gain
805	Anlg In1 Filt BW
806	Anlg In2 Data
808	Anlg In2 Scale
809	Anlg In2 Offset
810	AI 2 Filt Gain
811	Anlg In2 Filt BW

Analog Outputs	
814	AnlgOut1 Integer
815	Anlg Out1 Real
817	Anlg Out1 Scale
812	Anlg Out1 Offset
818	Anlg Out1 Zero
819	AnlgOut2 Integer
820	Anlg Out2 Real
822	Anlg Out2 Scale
813	Anlg Out2 Offset
823	Anlg Out2 Zero

Digital Inputs	
825	En In Debounce
838	DigIn1 Sel
829	DigIn1 Debounce
826	DigIn1 Data
827	DigIn1 Bit
828	DigIn1 User Data
839	DigIn2 Sel
833	DigIn2 Debounce
830	DigIn2 Data
831	DigIn2 Bit
832	DigIn2 User Data
840	DigIn3 Sel
837	DigIn3 Debounce
834	DigIn3 Data
835	DigIn3 Bit
836	DigIn3 User Data

Digital Outputs	
(1)	Relay Out Data
843	Relay Out Bit
844	Dig Out 1 Data
845	Dig Out 1 Bit
846	Dig Out 2 Data
	Dig Out 2 Bit
(1)	

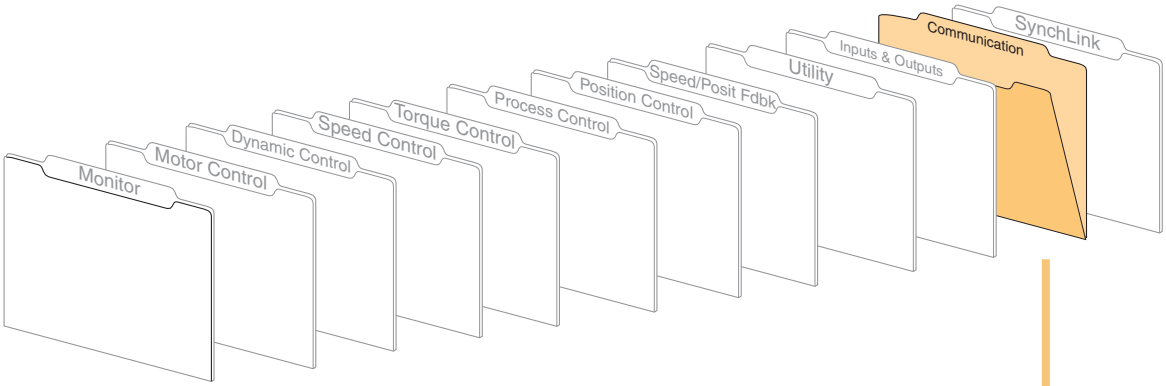

Commands

691	DPI Ref Select
664	Lgx Comm Format

Masks & Owners

693	Logic Mask
694	Start Mask
695	Jog Mask
696	Direction Mask
697	Fault Clr Mask
700	Stop Owner
701	Start Owner
702	Jog Owner
703	Direction Owner
704	Fault Clr Owner

DPI Data Links

707	Data In A1 Int
708	Data In A1 Real
709	Data In A2 Int
710	Data In A2 Real
711	Data In B1 Int
712	Data In B1 Real
713	Data In B2 Int
714	Data In B2 Real
715	Data In C1 Int
716	Data In C1 Real
717	Data In C2 Int
718	Data In C2 Real
719	Data In D1 Int
720	Data In D1 Real
721	Data In D2 Int
722	Data In D2 Real
723	DLink OutDataTyp
724	Data Out A1 Int
725	Data Out A1 Real
726	Data Out A2 Int
727	Data Out A2 Real
728	Data Out B1 Int
729	Data Out B1 Real
730	Data Out B2 Int
731	Data Out B2 Real
732	Data Out C1 Int
733	Data Out C1 Real
734	Data Out C2 Int
735	Data Out C2 Real
736	Data Out D1 Int
737	Data Out D1 Real
738	Data Out D2 Int
739	Data Out D2 Real

Logix Inputs

600	Integer In00
601	Real In00
602	Integer In01
603	Real In01
604	Integer In02
605	Real In02
606	Integer In03
607	Real In03
608	Integer In04
609	Real In04
610	Integer In05
611	Real In05
612	Integer In06
613	Real In06
614	Integer In07
615	Real In07
616	Integer In08
617	Real In08
618	Integer In09
619	Real In09
620	Integer In10
621	Real In10
622	Integer In11
623	Real In11
624	Integer In12
625	Real In12
626	Integer In13
627	Real In13
628	Integer In14
629	Real In14
630	Integer In15
631	Real In15

Logix Outputs

632	Integer Out00
633	Real Out00
634	Integer Out01
635	Real Out01
636	Integer Out02
637	Real Out02
638	Integer Out03
639	Real Out03
640	Integer Out04
641	Real Out04
642	Integer Out05
643	Real Out05
644	Integer Out06
645	Real Out06
646	Integer Out07
647	Real Out07
648	Integer Out08
649	Real Out08
650	Integer Out09
651	Real Out09
652	Integer Out10
653	Real Out10
654	Integer Out11
655	Real Out11
656	Integer Out12
657	Real Out12
658	Integer Out13
659	Real Out13
660	Integer Out14
661	Real Out14
662	Integer Out15
663	Real Out15

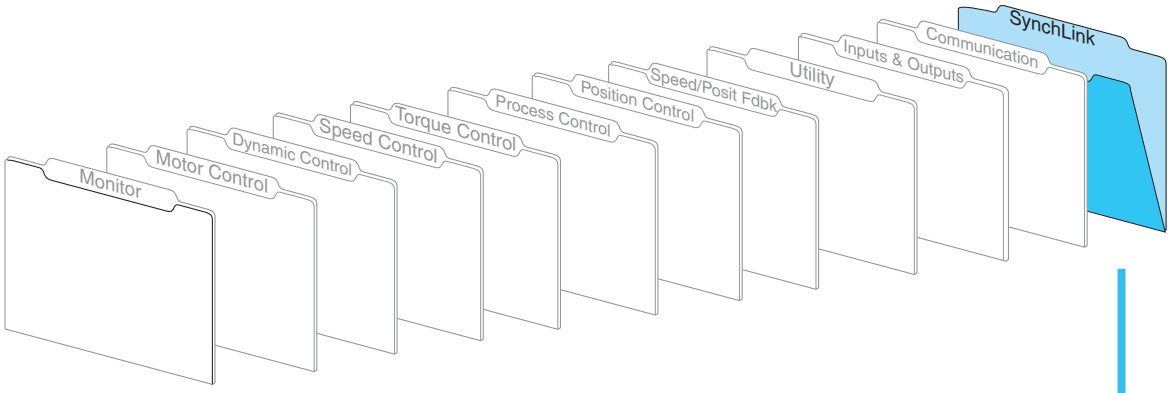

SynchLink Config

1000	SL Node Cnfg
1010	SL Rx Comm Frmt
1011	SL Rx DirectSel0
1012	SL Rx DirectSel1
1013	SL Rx DirectSel2
1014	SL Rx DirectSel3
1020	SL Tx Comm Frmt
1021	SL Tx DirectSel0
1022	SL Tx DirectSel1
1023	SL Tx DirectSel2
1024	SL Tx DirectSel3

Multiplier

1030	SL Mult A In
1031	SL Mult B In
1032	SL Mult Base
1033	SL Mult Out
1034	SL Mult State
1035	Real to Int In
1036	Real to Int Out

Event Data

1040	SL Rcv Events
1049	SL Clr Events
1041	SL Rx P0 Regis
1042	SL Rx P1 Regis

Direct Data

1054	SL Dir Int Rx0
1055	SL Dir Real Rx0
1056	SL Dir Int Rx1
1057	SL Dir Real Rx1
1058	SL Dir Int Rx2
1059	SL Dir Real Rx2
1060	SL Dir Int Rx3
1061	SL Dir Real Rx3
1140	Tx Dir Data Type
1141	SL Dir Int Tx0
1142	SL Dir Real Tx0
1143	SL Dir Int Tx1
1144	SL Dir Real Tx1
1145	SL Dir Int Tx2
1146	SL Dir Real Tx2
1147	SL Dir Int Tx3
1148	SL Dir Real Tx3

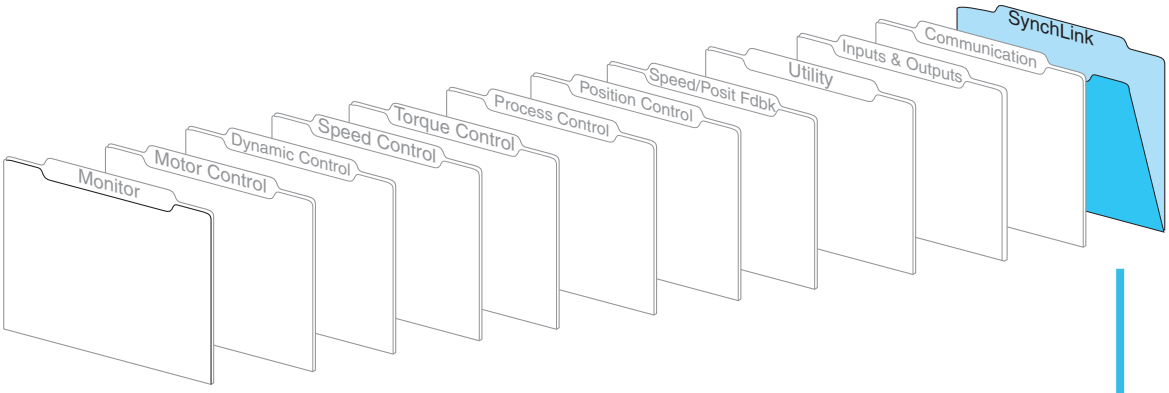

Buffered Data In

1073	SL Buf Int Rx00	1103	SL Buf Int Rx15
1074	SL Buf Real Rx00	1104	SL Buf Real Rx15
1075	SL Buf Int Rx01	1105	SL Buf Int Rx16
1076	SL Buf Real Rx01	1106	SL Buf Real Rx16
1077	SL Buf Int Rx02	1107	SL Buf Int Rx17
1078	SL Buf Real Rx02	1108	SL Buf Real Rx17
1079	SL Buf Int Rx03	1109	SL Buf Int Rx18
1080	SL Buf Real Rx03	1110	SL Buf Real Rx18
1081	SL Buf Int Rx04	1111	SL Buf Int Rx19
1082	SL Buf Real Rx04	1112	SL Buf Real Rx19
1083	SL Buf Int Rx05	1113	SL Buf Int Rx20
1084	SL Buf Real Rx05	1114	SL Buf Real Rx20
1085	SL Buf Int Rx06	1115	SL Buf Int Rx21
1086	SL Buf Real Rx06	1116	SL Buf Real Rx21
1087	SL Buf Int Rx07	1117	SL Buf Int Rx22
1088	SL Buf Real Rx07	1118	SL Buf Real Rx22
1089	SL Buf Int Rx08	1119	SL Buf Int Rx23
1090	SL Buf Real Rx08	1120	SL Buf Real Rx23
1091	SL Buf Int Rx09	1121	SL Buf Int Rx24
1092	SL Buf Real Rx09	1122	SL Buf Real Rx24
1093	SL Buf Int Rx10	1123	SL Buf Int Rx25
1094	SL Buf Real Rx10	1124	SL Buf Real Rx25
1095	SL Buf Int Rx11	1125	SL Buf Int Rx26
1096	SL Buf Real Rx11	1126	SL Buf Real Rx26
1097	SL Buf Int Rx12	1127	SL Buf Int Rx27
1098	SL Buf Real Rx12	1128	SL Buf Real Rx27
1099	SL Buf Int Rx13	1129	SL Buf Int Rx28
1100	SL Buf Real Rx13	1130	SL Buf Real Rx28
1101	SL Buf Int Rx14	1131	SL Buf Int Rx29
1102	SL Buf Real Rx14	1132	SL Buf Real Rx29

Buffered Data Out

1160	Tx Buf Data Type	1190	SL Buf Real Tx14
1161	SL Buf Int Tx00	1191	SL Buf Int Tx15
1162	SL Buf Real Tx00	1192	SL Buf Real Tx15
1163	SL Buf Int Tx01	1193	SL Buf Int Tx16
1164	SL Buf Real Tx01	1194	SL Buf Real Tx16
1165	SL Buf Int Tx02	1195	SL Buf Int Tx17
1166	SL Buf Real Tx02	1196	SL Buf Real Tx17
1167	SL Buf Int Tx03	1197	SL Buf Int Tx18
1168	SL Buf Real Tx03	1198	SL Buf Real Tx18
1169	SL Buf Int Tx04	1199	SL Buf Int Tx19
1170	SL Buf Real Tx04	1200	SL Buf Real Tx19
1171	SL Buf Int Tx05	1201	SL Buf Int Tx20
1172	SL Buf Real Tx05	1202	SL Buf Real Tx20
1173	SL Buf Int Tx06	1203	SL Buf Int Tx21
1174	SL Buf Real Tx06	1204	SL Buf Real Tx21
1175	SL Buf Int Tx07	1205	SL Buf Int Tx22
1176	SL Buf Real Tx07	1206	SL Buf Real Tx22
1177	SL Buf Int Tx08	1207	SL Buf Int Tx23
1178	SL Buf Real Tx08	1208	SL Buf Real Tx23
1179	SL Buf Int Tx09	1209	SL Buf Int Tx24
1180	SL Buf Real Tx09	1210	SL Buf Real Tx24
1181	SL Buf Int Tx10	1211	SL Buf Int Tx25
1182	SL Buf Real Tx10	1212	SL Buf Real Tx25
1183	SL Buf Int Tx11	1213	SL Buf Int Tx26
1184	SL Buf Real Tx11	1214	SL Buf Real Tx26
1185	SL Buf Int Tx12	1215	SL Buf Int Tx27
1186	SL Buf Real Tx12	1216	SL Buf Real Tx27
1187	SL Buf Int Tx13	1217	SL Buf Int Tx28
1188	SL Buf Real Tx13	1218	SL Buf Real Tx28
1189	SL Buf Int Tx14	1219	SL Buf Int Tx29
		1220	SL Buf Real Tx29

Parameter Data in Linear List Format

No.	Name Description	Values	Linkable	Read-Write	Data Type
1	**Motor NP Volts** Set to the motor nameplate rated volts.	Units: Volt Default: Calculated Min/Max: 75/705		✓	16-bit Integer
2	**Motor NP FLA** Set to the motor nameplate rated full load amps. Range limited by three-second inverter rating.	Units: Amps Default: Calculated Min/Max: Calculated/Calculated		✓	Real
3	**Motor NP Hertz** Set to the motor nameplate rated frequency.	Units: Hz Default: Calculated Min/Max: 2.0000/500.0000		✓	Real
4	**Motor NP RPM** Set to the motor nameplate rated RPM.	Units: RPM Default: Calculated Min/Max: 1/30000		✓	16-bit Integer
5	**Motor NP Power** Set to the motor nameplate rated power.	Units: Hp Default: Calculated Min/Max: 0.2500/3500.0000		✓	Real
6	**Mtr NP Pwr Units** The power units shown on the motor nameplate.	Default: 0 Hp Options: 0 Hp 1 W			
7	**Motor Poles** Set to the number of motor poles indicated on the motor nameplate. Only even numbers are allowed.	Units: Pole Default: 4 Min/Max: 2/40		✓	16-bit Integer
8	**Motor Inertia** Time, in seconds, for an uncoupled motor to accelerate from zero to base speed, at rated motor torque. Calculated during autotune.	Units: Sec Default: 0.400 Min/Max: 0.0100/655.0000	✓	✓	Real
9	**Total Inertia** Time, in seconds, for a motor coupled to a load to accelerate from zero to base speed, at rated motor torque. Calculated during autotune.	Units: Sec Default: 2.0000 Min/Max: 0.0100/655.0000	✓	✓	Real
10	**Speed Ref 1** Sets the speed reference that the drive should use when selected by Par 16 [Speed Ref Sel]. A value of 1.0 represents base speed of the motor.	Default: 0.0000 Min/Max: -/+2200000000.0000	✓	✓	Real
11	**Spd Ref1 Divide** Par 10 [Speed Ref 1] is divided by this number. This number can be used to scale the value of Par 10 [Speed Ref 1].	Default: 1.0000 Min/Max: -/+2200000000.0000	✓	✓	Real
12	**Speed Ref 2** Sets the speed reference that the drive should use when selected by Par 16 [Speed Ref Sel]. A value of 1.0 represents base speed of the motor.	Default: 0.0000 Min/Max: -/+2200000000.0000	✓	✓	Real
13	**Spd Ref2 Multi** Par 12 [Speed Ref 2] is multiplied by this number. This number can be used to scale the value of Par 12 [Speed Ref 2].	Default: 1.0000 Min/Max: -/+2200000000.0000	✓	✓	Real
14	**Speed Ref 4** Sets the speed reference that the drive should use when selected by Par 16 [Speed Ref Sel].	Units: RPM Default: 0.0000 Min/Max: -/+14112.0000 Comm Scale: Par 4 [Motor NP RPM] = 1.0	✓	✓	Real
15	**Speed Ref 5** Sets the speed reference that the drive should use when selected by Par 16 [Speed Ref Sel].	Units: RPM Default: 0.0000 Min/Max: -/+14112.0000 Comm Scale: Par 4[Motor NP RPM] = 1.0	✓	✓	Real
16	**Speed Ref Sel** Selects the source of the speed reference to the drive.	Default: 1 "Spd Ref DPI" Options: 0 "Zero Speed" 4 "Spd Ref 4" 1 "Spd Ref 1 5 "Spd Ref 5" 2 "Spd Ref 2" 6 "Spd Ref DPI" 3 "Spd Ref 3			
17	**Jog Speed 1** Sets the speed reference that the drive should use when responding to bit 18 [Jog 1] of Par 152 [Applied LogicCmd].	Units: RPM Default: 0.0000 Min/Max: -/+14112.0000 Comm Scale: Par 4 [Motor NP RPM] = 1.0	✓	✓	Real
18	**Jog Speed 2** Sets the speed reference that the drive should use when responding to bit 23 [Jog 2] of Par 152 [Applied LogicCmd].	Units: RPM Default: 0.0000 Min/Max: -/+14112.0000 Comm Scale: Par 4 [Motor NP RPM] = 1.0	✓	✓	Real
19	**Atune Spd Ref** Sets the maximum speed of the motor during the Flux current and inertia tests.	Units: RPM Default: 1499.4000 Min/Max: 176.4000/1764.0000 Comm Scale: Par 4 [Motor NP RPM] = 1.0		✓	Real

No.	Name Description	Values	Linkable	Read-Write	Data Type
20	**Speed Ref DPI** Sets the speed reference that the drive should use when selected in Par 16 [Speed Ref Sel]. A device communicating on a DPI port (typically a HIM) provides this value.	Units: RPM Default: 0.00000 Min/Max: -/+14112.00000 Comm Scale: Par 4 [Motor NP RPM] = 1.0			Real
21	**Speed Trim 1** Provides an additive trim value to Par 46 [Scaled Spd Ref].	Units: RPM Default: 0.0000 Min/Max: -/+14112.0000 Comm Scale: Par 4 [Motor NP RPM] = 1.0	✓	✓	Real
22	**Speed Trim 2** Provides an additive speed trim value to Par 47 [Spd Trim1 SpdRef] with a Lead/Lag filter. The Position regulator output is linked to this parameter by default. This speed trim value affects the speed reference input to the speed regulator.	Units: RPM Default: 0.0000 Min/Max: -/+14112.0000 Comm Scale: Par 4 [Motor NP RPM] = 1.0	✓	✓	Real
23	**Speed Trim 3** Provides a scalable speed trim value that will be added to Par 47 [Spd Trim1 SpdRef]. Par 24 [SpdTrim 3 Scale] scales this value prior to the trim value affecting the speed reference.	Units: RPM Default: 0.0000 Min/Max: -/+14112.0000 Comm Scale: Par 4 [Motor NP RPM] = 1.0	✓	✓	Real
24	**SpdTrim 3 Scale** Par 23 [Speed Trim 3] is multiplied by this number. This number can be used to scale the value of Par 23 [Speed Trim 3].	Default: 1.0000 Min/Max: -/+1000.0000	✓	✓	Real
25	**STrim2 Filt Gain** Sets the lead term for the Par 22 [Speed Trim 2] filter. A value greater than 1 will result in a lead function and a value less than 1 will result in a lag function. A value of 1 will disable the filter.	Default: 1.0000 Min/Max: -/+15.0000	✓	✓	Real
26	**SpdTrim2 Filt BW** Sets the frequency for the Speed Trim 2 filter.	Units: R/S Default: 200.0000 Min/Max: 0.0000/1000.0000	✓	✓	Real
30	**Rev Speed Limit** Sets a limit on the speed reference in the negative direction. This value can be entered as a negative value or zero.	Units: RPM Default: -2205.0000 Min/Max: -14112.0000/0.0000 Comm Scale: Par 4 [Motor NP RPM] = 1.0		✓	Real
31	**Fwd Speed Limit** Sets a limit on the speed reference in the positive direction. This value can be entered as a positive value or zero.	Units: RPM Default: 2205.0000 Min/Max: 0.0000/14112.0000 Comm Scale: Par 4 [Motor NP RPM] = 1.0		✓	Real
32	**Accel Time** Sets the rate of acceleration for all speed increases, with time in seconds to base speed. Accel Rate = Par 4 [Motor NP RPM] / Par 32 [Accel Time]	Units: Sec Default: 10.0000 Min/Max: 0.0100/6553.5000	✓	✓	Real
33	**Decel Time** Sets the rate of deceleration for all speed decreases, with time in seconds to base speed. Decel Rate = Par 4 [Motor NP RPM] / Par 33 [Decel Time]	Units: Sec Default: 10.0000 Min/Max: 0.0100/6553.5000	✓	✓	Real
34	**S Curve Time** Sets the S time (Round In and Round Out) in seconds. Half of the time specified is added to the beginning and half to the end of the applied ramp. The S time is independent of speed and results in a trapezoidal torque profile. For example: 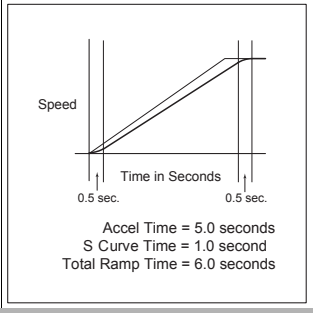 	Units: Sec Default: 0.5000 Min/Max: 0.0000/4.0000	✓	✓	Real
35	**SpdRef Filt Gain** Sets the lead term for the Speed Reference filter. A value greater than 1 will result in a lead function and a value less than 1 will result in a lag function. A value of 1 will disable the filter.	Default: 1.0000 Min/Max: -/+5.0000	✓	✓	Real
36	**SpdRef Filt BW** Sets the frequency for the Speed Reference filter.	Units: R/S Default: 0.0000 Min/Max: 0.0000/500.0000	✓	✓	Real
37	**Spd Ref Bypass** The speed command after the limit, ramp and s-curve blocks. Link a source directly to this parameter to bypass these blocks.	Units: RPM Default: 0.0000 Min/Max: -/+14112.0000 Comm Scale: Par 4 [Motor NP RPM] = 1.0	✓	✓	Real
38	**Speed Ref Scale** This parameter is multiplied with the value in Par 44 [Filtered Spd Ref] to produce the value in Par 46 [Scaled Spd Ref].	Default: 1.0000 Min/Max: -/+1000.0000 x 1	✓	✓	Real

No.	Name Description	Values	Linkable	Read-Write	Data Type
40	**Selected Spd Ref** Displays the speed command before the speed reference limit block.	Units: RPM Default: 0.0000 Min/Max: -/+14112.0000 Comm Scale: Par 4 [Motor NP RPM] = 1.0			Real
41	**Limited Spd Ref** Displays the speed command after the limit block, limited by Par 30 [Rev Speed Limit] and Par 31 [Fwd Speed Limit].	Units: RPM Default: 0.0000 Min/Max: -/+14112.0000 Comm Scale: Par 4 [Motor NP RPM] = 1.0			Real
42	**Ramped Spd Ref** Displays the speed command after the linear ramp block, modified by Par 32 [Accel Time] and Par 33 [Decel Time].	Units: RPM Default: 0.0000 Min/Max: -/+14112.0000 Comm Scale: Par 4 [Motor NP RPM] = 1.0			Real
43	**S Curve Spd Ref** Displays the speed command after the s-curve block, modified by Par 34 [S Curve Time].	Units: RPM Default: 0.0000 Min/Max: -/+14112.0000 Comm Scale: Par 4 [Motor NP RPM] = 1.0			Real
44	**Filtered Spd Ref** Displays the speed reference value output from the reference Lead/Lag filter.	Units: RPM Default: 0.0000 Min/Max: -/+14112.0000 Comm Scale: Par 4 [Motor NP RPM] = 1.0			Real
45	**Delayed Spd Ref** One sample period delayed output of Par 43 [S Curve Spd Ref]. Used in some applications to synchronize the speed reference value through SynchLink. This master drive [S Curve Spd Ref] would then be transmitted to the slave drives over SynchLink.	Units: RPM Default: 0.0000 Min/Max: -/+14112.0000 Comm Scale: Par 4[Motor NP RPM] = 1.0			Real
46	**Scaled Spd Ref** Displays the speed command after scaling (the product of Par 44 [Filtered Spd Ref] and Par 38 [Speed Ref Scale].	Units: RPM Default: 0.0000 Min/Max: -/+14112.0000 Comm Scale: Par 4 [Motor NP RPM] = 1.0			Real
47	**Spd Trim1 SpdRef** Displays the final speed command used by the Speed Regulator. It is the sum of the Par 46 [Scaled Spd Ref] and Par 21 [Speed Trim1].	Units: RPM Default: 0.0000 Min/Max: -/+14112.0000 Comm Scale: Par 4 [Motor NP RPM] = 1.0			Real
50	**Spd Ref TP Sel** Enter or write a value to select speed reference data displayed in Par 52 [Spd Ref TP Data] and Par 51 [Spd Ref TP RPM].	Default: 0 "Zero" Options: 0 "Zero" 1 "User Ref" 2 "Logic Select" 3 "Lgc Sel Ref" 4 "Reserved" 5 "Logic En Ref" 6 "Rev Spd Lim" 7 "Fwd Spd Lim" 8 "Rev Lim Stat" 9 "Fwd Lim Stat" 10 "Amp Lim Stat" 11 "Ramp Match" 12 "S Crv Match" 13 "S Array Size" 14 "S Array Indx" 15 "Reserved" 16 "Scl Ext Trim" 17 "Trim FiltOut" 18 "Ref w/Trim" 19 "Amp Lim2 In" 20 "Amp LimStat2" 21 "Amp Lim2 Out 22 "FTD Ramp Out"			
51	**Spd Ref TP RPM** Displays the value selected by Par 50 [Spd Ref TP Sel] in RPM. This display should only be used if the selected value is floating point data.	Units: RPM Default: 0.0000 Min/Max: -/+14112.0000 Comm Scale: Par 4[Motor NP RPM] = 1.0			Real
52	**Spd Ref TP Data** Displays the value selected by Par 50 [Spd Ref TP Sel]. A value of 1.0 represents base speed of the motor.	Default: 0 Min/Max: -/+32768			16-bit Integer
53	**Drive Ramp Rslt** Displays the speed reference value, after the limit function. This is the input to the error calculator and speed regulator. Available for use in peer-to-peer data links (DPI interface). This number is scaled so that rated motor speed will read 32768.	Default: 0 Min/Max: -/+262144/262144			16-bit Integer
55	**Speed Comp** Displays the derivative or change in Par 56 [Inertia SpeedRef] on a per second basis. Link this parameter to Par 23 [Speed Trim 3] and set Par 24 [SpeedTrim 3 Scale] to 0.002 to reduce position error in following applications.	Default: 0.0000 Min/Max: -/+2200000000.0000			16-bit Integer
56	**Inertia SpeedRef** The speed input of the inertia compensator. Link this parameter to the output of an internal ramp or s-curve block. The inertia compensator generates a torque reference that is proportional to the rate of change of speed input and total inertia.	Units: RPM Default: 0.0000 Min/Max: -/+14112.0000 Comm Scale: Par 4 [Motor NP RPM] = 1.0	✓	✓	Real
57	**InertiaAccelGain** Sets the acceleration gain for the Inertia Compensation function. A value of 1 produces 100% compensation.	Default: 1.0000 Min/Max: 1.0000/2.0000	✓	✓	Real
58	**InertiaDecelGain** Sets the deceleration gain for the Inertia Compensation function. A value of 1 produces 100% compensation.	Default: 1.0000 Min/Max: 1.0000/2.0000	✓	✓	Real

No.	Name Description	Values	Linkable	Read-Write	Data Type
59	**Inertia Torq Add** The torque reference output generated by the inertia compensator. This torque level is modified by Par 57 [InertiaAccelGain] and Par 58 [InertiaDecelGain]. A value of 1.0 represents rated torque of the motor.	Units: P.U. Default: 1.0000 Min/Max: -/+8.0000			Real
60	**DeltaSpeedScale** Multiplier in the Inertia Compensation function - affects the value of Par 59 [Inertia Torq Add]. Use in center winder and unwind applications to compensate for roll diameter build-up.	Default: 1.0000 Min/Max: -/+1000.0000	✓	✓	Real
61	**Virt Encoder EPR** Equivalent Edges Per Revolution (EPR) or line count of a virtual encoder. A virtual encoder is a position reference whose input comes from speed reference. It accumulates pulses at the same rate as a real encoder of identical Pulses Per Revolution (PPR). Enter the equivalent PPR. For example: Enter 1024 EPR to match an encoder with 1024 PPR.	Units: EPR Default: 4096 Min/Max: 10/67108864		✓	32-bit Integer
62	**Virt Encdr Posit** A 32-bit pulse accumulator of the virtual encoder. The accumulated pulse count is equivalent to the hardware accumulator of a real encoder. It accumulates at a rate of 4x the value placed in Par 61 [Virt Encoder EPR]. The accumulator starts at zero upon position enable.	Default: 0 Min/Max: -/+2147483648			32-bit Integer
63	**Virt Encdr Dlyed** One sample period delayed output of Par 62 [Virt Encdr Posit]. Used in some applications to phase synchronize position reference through SynchLink. The master is delayed one sample while the downstream drives update their position references – then all drives sample position simultaneously. The downstream drives do not select a delay.	Default: 0 Min/Max: -/+2147483648			32-bit Integer
70	**MtrSpd Sim Posit** The motor position output of the motor simulator. The simulator provides motor position information during setup and troubleshooting when actual motor control is not desired or possible. To use the motor simulator, enter a value of 4 in Par 222 [Motor Fdbk Sel].	Default: 0 Min/Max: -/+2147483648			32-bit Integer
71	**Filtered SpdFdbk** Displays the motor speed feedback value output from the feedback Lead/Lag filter.	Units: RPM Default: 0.0000 Min/Max: -/+14112.0000 Comm Scale: Par 4 [Motor NP RPM] = 1.0			Real
72	**Scaled Spd Fdbk** Displays the product of the speed feedback and Par 73 [Spd Fdbk Scale]. This parameter is for display only.	Default: 0.0000 Min/Max: -/+2200000000.0000 Comm Scale: Par 4 [Motor NP RPM] = 1.0			Real
73	**Spd Fdbk Scale** A user adjustable scale factor (multiplier) for speed feedback. It is multiplied with speed feedback to produce Par 72 [Scaled Spd Fdbk].	Default: 1.0000 Min/Max: -/+2200000000.0000 x 1	✓	✓	Real
74	**Motor Spd Est** Displays estimated motor speed, calculated when the selected feedback is sensorless or when encoderless ridethrough is enabled.	Units: RPM Default: 0.0000 Min/Max: -/+14112.0000 Comm Scale: Par 4 [Motor NP RPM] = 1.0			Real
75	**MtrSpd Est Posit** Summation (or integration) of Par 74 [Motor Spd Est] scaled by the value in Par 226 [Virtual Edge/Rev].	Default: 0 Min/Max: -/+2147483648			32-bit Integer
76	**MtrSpd Simulated** The motor speed output of the motor simulator. The simulator provides motor speed information during setup and troubleshooting when actual motor control is not desired or possible. To use the motor simulator, enter a value of 4 in Par 222 [Motor Fdbk Sel].	Units: RPM Default: 0.0000 Min/Max: -/+14112.0000 Comm Scale: Par 4 [Motor NP RPM] = 1.0			Real
77	**Spd Fdbk TP Sel** Enter or write a value to select the data displayed in Par 78 [Spd Fdbk TP RPM] and Par 79 [Spd Fdbk TP Data].	Default: 0 "Zero" Options: 0 "Zero" 1 "Clock Time" 2 "InactvFbkDev" 3 "ActiveFbkDev" 4 "MCP Fdbk Dev" 5 "Observer Err" 6 "UnFilt Load" 7 "Pri Actl Spd" 8 "Alt Actl Spd" 9 "Pri Actl Pos" 10 "Alt Actl Pos" 11 "Obser dp in" 12 "Obser dp" 13 "Obser dperr" 14 "Obser accel" 15 "Obser K3/S" 16 "MCP PPR" 17 "MCP 2^n" 18 "E0 Edge Time" 19 "E0 dEdge" 20 "E0 dTime" 21 "E0 EPR" 22 "E0 Edge Mode" 23 "E0 dTheta" 24 "E0 Error" 25 "E0 Qloss pk" 26 "E0 Ploss pk" 27 "E0 PlevlHist" 28 "E1 Edge Time" 29 "E1 dEdge" 30 "E1 dTime" 31 "E1 EPR" 32 "E1 Edge Mode" 33 "E1 dTheta" 34 "E1 Error" 35 "E1 Qloss pk" 36 "E1 Ploss pk" 37 "E1 PlevlHist" 38 "E0 Delta2Err" 39 "E1 Delta2Err"			
78	**Spd Fdbk TP RPM** Displays the value selected in Par 77 [Spd Fdbk TP Sel] in RPM. This display should only be used if the selected value is floating point data.	Units: RPM Default: 0.0000 Min/Max: -/+14112.0000 Comm Scale: Par 4 [Motor NP RPM] = 1.0			Real

No.	Name Description	Values	Linkable	Read-Write	Data Type
79	**Spd Fdbk TP Data** Displays the value selected in Par 77 [Spd Fdbk TP Sel]. This display should only be used if the selected value is integer data.	Default: 0 Min/Max: -/+32768			16-bit Integer
80	**Speed Reg Ctrl** Enter or write a value to configure the speed regulator integrator. Refer to Appendix B, Speed Control, on page B-4.				
81	**Spd Reg P Gain** Sets the proportional gain of the speed regulator. It's value is automatically calculated based on the bandwidth setting in Par 90 [Spd Reg BW]. Proportional gain may be manually adjusted by setting Par 90 to a value of zero. Units are (per unit torque) / (per unit speed). Adjustments to Par 474 [Freq Reg We BW] and Par 475 [Freq Reg Wr BW] may be necessary when using sensorless feedback.	Default: 20.0000 Min/Max: 0.0000/600.0000	✓	✓	Real
82	**Spd Reg I Gain** Sets the integral gain of the speed regulator. It's value is automatically calculated based on the bandwidth setting in Par 90 [Spd Reg BW]. Integral gain may be manually adjusted by setting Par 90 to a value of zero. Units are (per unit torque/sec) / (per unit speed). Adjustments to Par 474 [Freq Reg We BW] and 4Par 75 [Freq Reg Wr BW] may be necessary when using sensorless feedback.	Units: /Sec Default: 50.0000 Min/Max: 0.0000/100000.0000	✓	✓	Real
84	**SpdReg AntiBckup** By setting this parameter to 0.3 the drive will not over-shoot to a step response. This parameter has no affect on the drive's response to load changes. Recommended setting is 0.1000 to 0.5000.	Default: 0.0000 Min/Max: 0.0000/0.5000	✓	✓	Real
85	**Servo Lock Gain** Sets the gain of an additional integrator in the speed regulator. The effect of Servo Lock is to increase stiffness of the speed response to a load disturbance. It behaves like a position regulator with velocity feed forward, but without the pulse accuracy of a true position regulator. The units of Servo Lock are rad/sec. Gain should normally be set to less than 1/3 speed regulator bandwidth, or for the desired response. Set to zero to disable Servo Lock.	Units: /Sec Default: 0.0000 Min/Max: 0.0000/300.0000	✓	✓	Real
86	**Spd Reg Droop** Specifies the amount of base speed that the speed reference is reduced when at full load torque. Use the droop function to cause the motor speed to decrease with an increase in load. The units are per unit speed / per unit torque.	Units: P.U. Default: 0.0000 Min/Max: 0.0000/0.2500	✓	✓	Real
87	**SReg Torq Preset** When the drive is not enabled, this parameter presets integrator output Par 101 [SpdReg Integ Out] to specified a torque level. This ensures that the torque command will be at the preset value when the drive is enabled and run. Par 80 [Speed Reg Ctrl] bit 1 [Preset Sel] = 0 enables this preset.	Units: P.U. Default: 0.0000 Min/Max: -/+8.0000	✓	✓	Real
89	**Spd Err Filt BW** Sets the bandwidth of a 2nd order Butterworth low pass filter, which reduces quantization noise. The units are rad/sec. A value of 0 will disable the filter. The value should be greater than 5 times the value of Par 90 [Spd Reg BW].	Units: R/S Default: 200.0000 Min/Max: 0.0000/2000.0000	✓	✓	Real

Options	Reserved	Preset Sel	Integ Hold	Integ Reset	Reserved	Reserved	Reserved	Reserved
Default	0	0	0	0	0	0	0	0
Bit	0	1	2	3	4	5	6	7

0 = False
1 = True

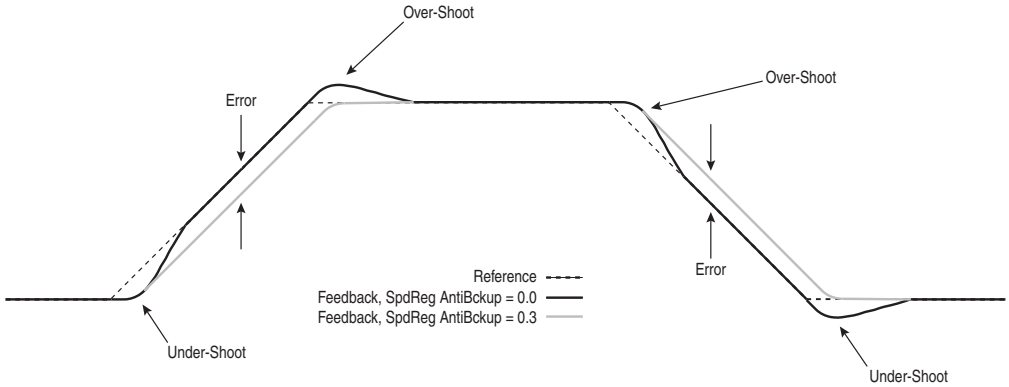

No.	Name Description	Values	Linkable	Read-Write	Data Type
90	**Spd Reg BW** Sets the bandwidth of the speed regulator in rad/sec. Bandwidth is also referred to as the crossover frequency. Small signal time response is approximately 1/BW and is the time to reach 63% of set point. A change to this parameter will cause an automatic update of Pars 81 [Spd Reg P Gain] and 82 [Spd Reg I Gain]. To disable the automatic gain calculation, set this parameter to a value of zero. Adjustments to Par 474 [Freq Reg We BW] and Par 475 [Freq Reg Wr BW] may be necessary when using sensorless feedback.	Units: R/S Default: 10.0000 Min/Max: 0.0000/500.0000 Min/Max limited by AutoTune calculations.	✓	✓	Real
91	**Spd Reg Damping** Sets the damping factor of the drive's characteristic equation and factors in the calculation of the integral gain. A damping factor of 1.0 is considered critical damp. Lowering the damping will produce faster load disturbance rejection, but may cause a more oscillatory response. When Par 90 [Spd Reg BW] is set to zero, damping factor has no effect.	Default: 1.0000 Min/Max: 0.5000/3.0000	✓	✓	Real
92	**SpdReg P Gain Mx** Places a limit on the maximum value of proportional gain in Par 81 [Spd Reg P Gain]. When gains are automatically calculated, this parameter is necessary to limit the amplification of noise with increased inertia.	Default: 100.0000 Min/Max: 0.0000/600.0000	✓	✓	Real
93	**SRegFB Filt Gain** Sets the lead term for the speed feedback filter. A value greater than 1 will result in a lead function and a value less than 1 will result in a lag function. A value of 1 will disable the filter.	Default: 1.0000 Min/Max: -5.0000/20.0000	✓	✓	Real
94	**SReg FB Filt BW** Sets the frequency for the Speed feedback filter.	Units: R/S Default: 35.0000 Min/Max: 0.0000/3760.0000	✓	✓	Real
95	**SRegOut FiltGain** Sets the lead term for the Speed Regulator output filter. A value greater than 1 will result in a lead function and a value less than 1 will result in a lag function. A value of 1 will disable the filter.	Default: 0.7000 Min/Max: -/+5.0000	✓	✓	Real
96	**SReg Out Filt BW** Sets the frequency for the Speed Regulator output filter.	Units: R/S Default: 30.0000 Min/Max: 0.0000/3760.0000	✓	✓	Real
97	**Act Spd Reg BW** Displays the actual speed regulator bandwidth or crossover frequency. The value represents the bandwidth in Par 90 [Spd Reg BW] after the maximum bandwidth limits have been applied.	Units: R/S Default: 10.0000 Min/Max: 0.0000/500.0000			Real
98	**Spd Gain TP Sel** Enter or write a value to select the speed gain data displayed in Par 99 [Spd Gain TP Data].	Default: 0 "Zero" Options: 0 "Zero" 1 "Iq Rate BW" 2 "Reserved" 3 "PGain Max BW" 4 "BW Limit" 5 "InertiaMaxBW" 6 "BW Lim Stat" 7 "BW Select" 8 "Totl Inertia" 9 "Tl Lim Stat" 10 "Mtr Inertia" 11 "M InrtLStat" 12 "I Rate Limit" 13 "I RtLim Stat" 14 "PGain Max" 15 "GnMx LimStat" 16 "Damping" 17 "Dmp Lim Stat" 18 "Reserved" 19 "Srls KpMxBW" 20 "Srls BWLimit" 21 "SrlsInrtMxBW" 22 "SrlsBWSelect" 23 "Srls BW Calc" 24 "Snsr BW Calc"			
99	**Spd Gain TP Data** Displays the value selected by Par 98 [Spd Gain TP Sel].	Default: 0.0000 Min/Max: 0.0000/500.0000			Real
100	**Speed Error** The error (difference) between the motor speed reference (+) and the filtered motor speed feedback (-).	Units: RPM Default: 0.0000 Min/Max: -/+14112.0000 Comm Scale: Par 4 [Motor NP RPM] = 1.0			Real
101	**SpdReg Integ Out** The output value of the Speed Regulator Integral channel.	Units: P.U. Default: 0.0000 Min/Max: -/+8.0000 Comm Scale: 1.0 PU Torque			Real
102	**Spd Reg Pos Lim** Sets the positive limit of the Speed regulator output value. The output of the Speed regulator is limited by adjustable high and low limits.	Units: P.U. Default: 3.0000 Min.Max: 0.0000/6.0000 Comm Scale: Par 4 [Motor NP RPM] = 1.0	✓	✓	Real
103	**Spd Reg Neg Lim** Sets the negative limit of the Speed regulator output value. The output of the Speed regulator is limited by adjustable high and low limits.	Units: P.U. Default: -3.0000 Min/Max: -6.0000/0.0000 Comm Scale: Par 4 [Motor NP RPM] = 1.0	✓	✓	Real
104	**SrLss Spd Reg Kp** Sets the proportional gain of the speed regulator when sensorless motor speed feedback is used. Value is automatically calculated based on the bandwidth set in Par 106 [Srlss Spd Reg BW]. Proportional gain may be manually adjusted by setting Par 106 to zero. This gain setting has no units (per unit torque) / (per unit speed error).	Default: 8.0000 Min/Max: 0.0000/200.0000		✓	Real

No.	Name Description	Values	Linkable	Read-Write	Data Type
105	**SrLss Spd Reg Ki** Sets the integral gain of the speed regulator when sensorless motor speed feedback is used. This value is automatically calculated based on the bandwidth set in Par 106 [Srlss Spd Reg BW]. Integral gain may be manually adjusted by setting Par 106 to zero. Units are '/Sec' (per unit torque/sec) / (per unit speed error).	Units: /Sec Default: 8.0000 Min/Max: 0.0000/4095.8000		✓	
106	**SrLss Spd Reg BW** Sets the bandwidth of the speed regulator when sensorless motor speed feedback is used. Units are in rad/sec. Bandwidth is also referred to as the crossover frequency. Small integral time response is approximately 1/BW and is the time to reach 63% of set point. A change to this parameter will cause an automatic update of Parameters 104 [SrLss Spd Reg Kp] and 105 [SrLss Spd Reg Ki]. To disable the automatic gain calculation, set this parameter to zero. The maximum limit for this parameter is determined by Par 354 [Iq Rate Limit], the ratio of Par 8 [Motor Inertia] to Par 9 [Total Inertia], and Par 107 [SrLss Kp Max].	Units: R/S Default: 10.0000 Min/Max: 0.0000/30.0000		✓	
107	**SrLss Kp Max** Places a limit on the maximum value of proportional gain in Par 104 [SrLss Spd Reg Kp], for use when sensorless motor speed feedback is used. When gains are autmatically calculated, this parameter is necessary to limit the amplification of noise with increased inertia.	Default: 20.0000 Min/Max: 20.0000/35.0000			
108	**Spd Reg TP Sel** Enter or write a value to select speed regulator data displayed in Par 109 [Spd Reg TP Data].	Default: 0 "Zero" Options: 0 "Zero" 1 "Spd FiltOut" 2 "Servo Lock" 3 "Spd+ServLock" 4 "Prop Output" 5 "Intg Input 6 "Scld Int Pre" 7 "Sel Int Pre" 8 "Droop Output" 9 "Out Lim Stat" 10 "Intg Hold" 11 "SrLss ZeroWe" 12 "I GainParLim" 13 "P GainParLim" 14 "SrvLck ParLm" 15 "AntiBkup PLm" 16 "Droop ParLim" 17 "Pos Lim Stat" 18 "Neg Lim Stat" 19 "Limiter Out" 20 "Active Pgain" 21 "Active Igain"			
109	**Spd Reg TP Data** Displays the data selected by Par 108 [Spd Reg TP Sel].	Units: P.U. Default: 0.0000 Min/Max: -/+8.0000			Real
110	**Spd/Torq ModeSel** Selects the source for the drive torque reference.	Default: 1 "Speed Reg" Options: 0 "Zero Torque" 1 "Speed Reg" 2 "Torque Ref" 3 "Min Spd/Torq" 4 "Max Spd/Torq" 5 "Sum Spd/Torq" 6 "AbsMn Spd/Tq"			
111	**Torque Ref 1** Supplies an external motor torque reference to the drive. This parameter is divided by the value in Par 112 [Torq Ref1 Div]. A value of 1.0 represents rated torque of the motor.	Default: 0.0000 Min/Max: -/+2200000000.0000 Comm Scale: 1.0 Rated Motor Torque	✓	✓	Real
112	**Torq Ref1 Div** Par 111 [Torque Ref 1] is divided by this number. Use this parameter to scale the value of Par 111 [Torque Ref 1].	Default: 1.0000 Min/Max: -/+2200000000.0000		✓	Real
113	**Torque Ref 2** Supplies an external motor torque reference to the drive. This parameter is multiplied by the value in Par 114 [Torq Ref2 Mult]. A value of 1.0 represents rated torque of the motor.	Default: 0.0000 Min/Max: -/+2200000000.0000 Comm Scale: 1.0 Rated Motor Torque	✓	✓	Real
114	**Torq Ref2 Mult** Par 113 [Torque Ref 2] is multiplied by this number. Use this parameter to scale the value of Par 113 [Torque Ref 2].	Default: 1.0000 Min/Max: -/+2200000000.0000	✓	✓	Real
115	**Torque Trim** The amount added to the Torque Ref 1 & 2 before the Speed/Torque Mode Selector. A value of 1.0 represents rated torque of the motor.	Units: P.U. Default: 0.0000 Min/Max: -/+8.0000 Comm Scale: 1.0 Rated Motor Torque	✓	✓	Real
116	**Torque Step** The amount added to the selected Torque Reference before notch filtering or limits are applied. A value of 1.0 represents rated torque of the motor.	Units: P.U. Default: 0.0000 Min/Max: -/+8.0000 Comm Scale: 1.0 Rated Motor Torque	✓	✓	Real
117	**Notch Filt Mode** Notch enabled.	Default: 0 "No Filter" Options: 0 "No Filter" 1 "Reserved" 2 "IIR Notch"			
118	**Notch Filt Freq** The center frequency for Notch filter.	Units: Hz Default: 135.0000 Min/Max: 0.0000/500.0000	✓	✓	Real
123	**Torq PosLim Actl** Sets the internal torque limit for positive torque reference values. The positive internal motor torque will not be allowed to exceed this value.	Units: P.U. Default: 1.0000 Min/Max: 0.0000/8.0000			Real
124	**Torq NegLim Actl** Sets the internal torque limit for negative torque reference values. The internal negative motor torque will not be allowed to exceed this value.	Units: P.U. Default: -1.0000 Min/Max: -8.0000/0.0000			Real

No.	Name Description	Values	Linkable	Read-Write	Data Type
125	**Torque Pos Limit** Sets the external torque limit for positive torque reference values. The external positive motor torque will not be allowed to exceed this value.	Units: P.U. Default: 2.0000 Min/Max: 0.0000/8.0000	✓	✓	Real
126	**Torque Neg Limit** Sets the external torque limit for negative torque reference values. The external negative motor torque will not be allowed to exceed this value.	Units: P.U. Default: -2.0000 Min/Max: -8.0000/0.0000	✓	✓	Real
127	**Mtring Power Lim** Sets the maximum motoring (positive) power of the drive. This can be calculated by multiplying the desired maximum motor torque and the maximum motor speed. A value of 1.0 = nominal motor power.	Units: P.U. Default: 8.0000 Min/Max: 0.0000/8.0000	✓	✓	Real
128	**Regen Power Lim** Sets the maximum regenerative (negative) power of the drive. This can be calculated by multiplying the desired maximum motor torque and the maximum motor speed. A value of 1.0 = nominal motor power.	Units: P.U. Default: -1.0000 Min/Max: -8.0000/0.0000	✓	✓	Real
129	**Atune Torq Ref** Sets the motor torque that is applied to the motor during the flux current and inertia tests.	Units: P.U. Default: 0.5000 Min/Max: 0.2500/1.0000 Comm Scale: 1.0 = P.U. Motor to Torque	✓	✓	Real
130	**Torq Ref TP Sel** Enter or write a value to select torque reference data displayed in Par 131 [Torq Ref TP Data].	Default: 0 "Zero" Options: 0 "Zero" 1 "Scale Output" 2 "Spd Torque" 3 "TrqModeOut" 4 "Actv rqMode" 5 "Actv Mod Out" 6 "Torq En In" 7 "NotchFiltOut" 8 "NotchFilt In" 9 "Torq Lim In" 10 "Bus Reg Out" 11 "Pos Pwr Lim" 12 "Neg Pwr Lim" 13 "PosAtun Torq" 14 "NegAtun Torq" 15 "Pos Lim Src" 16 "Neg Lim Src" 17 "MPwr Par Lim" 18 "RPwr Par Lim" 19 "+Torq ParLim" 20 "-Torq ParLim" 21 "Nom Bus Volt" 22 "Bus Volt Hys" 23 "Bus Reg Ref" 24 "Bus Reg Err" 25 "Bus Reg Intg" 26 "BusReg Clamp" 27 "BusRegOutput" 28 "IAA Filt Out" 29 "IAA dVf/dt" 30 "MC Torq Lim" 31 "Int Torq Lim"			
131	**Torq Ref TP Data** Displays the data selected by Par 130 [Torq Ref TP Sel].	Units: P.U. Default: 0.0000 Min/Max: -/+8.0000 Comm Scale: 1.0 = P.U. Motor to Torque			Real
132	**Inert Adapt Sel** Configures the Inertia Adaptation Algorithm (IAA Function). Contains the following selections: **Bit / Name / Current Function** **0** Inrtia Adapt — When set to 1 (on), the IAA function will effect enhanced stability, higher bandwidths and dynamic stiffness. Useful when systems with a gear-box becomes disconnected from the load. Also used with motors that have very little inertia that otherwise lack dynamic stiffness, even at high bandwidths. **1** Load Est — When set to 1 (on), the Load Estimate option removes or greatly reduces load disturbances and gives quicker system response. **0 & 1** — This mode enhances stability as well as removing load disturbances.	Default: 00000000 Min/Max: 00000000/00000011		✓	Real
133	**Inert Adapt BW** This parameter sets the bandwidth of the Inertia Adaptation function when the IAA function is selected (Par 132 [Inert Adpt Sel], bit 0 [Inrtia Adapt]). Typical IAA bandwidths range from 70 to 150 rad/sec with 100 rad/sec nominal best. If the Load Estimate (Par 132 [Inert Adpt Sel], bit 1 [load Est]) function is selected, then this parameter sets the natural frequency of a filter in rad/sec. Typical values range from 10 to 150 rad/sec with higher values being more responsive to disturbances but with increased system noise. There is no nominal best value, but 40 rad/sec is a suggested starting point. This adjustment may not function well in 'sloppy' geared systems. If both Inertia Adaptation and Load Estimate functions are active, use a bandwidth setting of 100 rad/sec.	Units: R/S Default: 100.0000 Min/Max: 10.0000/250.0000		✓	Real
134	**Inert Adapt Gain** This parameter sets a multiplier of system inertia when the Inertia Adaptation function is selected (Par 132 [Inert Adpt Sel], bit 0 [Inrtia Adapt]). Higher values may cause high frequency ringing, while smaller values may cause fundamental load instability. A typical value is 0.5 This parameter has no affect on the Load Estimate function.	Default: 0.500 Min/Max: 0.300/1.000		✓	Real

No.	Name Description	Values	Linkable	Read-Write	Data Type
140	**FricComp Spd Ref** Supplies a speed input to the Friction Compensation algorithm. This input is normally a speed reference from a motion planner or ramped speed reference. It will trigger a torque feed forward response depending on its value.	Units: RPM Default: 0.0000 Min/Max: -/+14112.0000 Comm Scale: Par 4 [Motor NP RPM] = 1.0	✓	✓	Real
141	**FricComp Setup** Enter or write a value to configure the friction compensation algorithm. This is a packed word of 3 digits. Each digit has a possible selection of 10 levels. • The least significant digit sets the speed threshold in intervals of 0.0005 pu speed. • The next (middle) digit sets the hysteresis band for the "units" digit in intervals of 0.0005 pu velocity. • The most significant digit sets the number of time steps from stick to slip, each step is 0.002 sec. Example: Fsetup = 524 means, 5 time steps between stick and slip, each of 0.002 sec. duration, 2 counts of hysteresis or 0.001 pu_speed (each count is 0.0005 pu speed), and 4 counts or 0.002 pu_speed is the trigger threshold (each count is 0.0005 pu speed).	Default: 325 Min/Max: 0/999Integer N N N Number of Time Steps Units Hysteresis		✓	16-bit Integer
142	**FricComp Stick** The torque needed to break away from zero speed. By the nature of friction, the break away sticktion will always be greater than the running friction.	Units: P.U. Default: 0.1500 Min/Max: 0.0000/8.0000 Comm Scale: Motor P.U. Torque	✓	✓	Real
143	**FricComp Slip** The torque level to sustain very low speed – once "break away" has been achieved. By the nature of friction, viscous friction will always be less than sticktion.	Units: P.U. Default: 0.1000 Min/Max: 0.0000/8.0000 Comm Scale: Motor P.U. Torque	✓	✓	Real
144	**FricComp Rated** The torque needed to a base friction at base motor speed and with no process loading. The friction compensation algorithm assumes a linear or viscous component of friction between Par 143 [FricComp Slip] and Par 144 [FricComp Rated].	Units: P.U. Default: 0.2000 Min/Max: 0.0000/8.0000 Comm Scale: Motor P.U. Torque	✓	✓	Real
145	**FricComp TorqAdd** The torque reference output of the Friction Compensation function. A value of 1.0 represents rated torque of the motor.	Units: P.U. Default: 0.0000 Min/Max: -/+8.0000 Comm Scale: Motor P.U. Torque			Real
150	**Logic State Mach** Indicates the logical state of the drive. Value 0 - "Stopped" indicates zero speed has been detected and the speed and torque regulators are disabled.	Default: 0 "Stopped" Options: 0 "Stopped" 1 "Starting" 2 "Running" 3 "Stopping" 4 "Inertia Test" 5 "MC Diag" 6 "Test Done"			

151 Logic Command

The controller-drive interface (as defined by the Controller Communication Format) sets bits to enable and disable various functions and algorithms. Bits that are changed here are reflected in Par 152 [Applied LogicCmd]. Note: Bits 4 through 9 in Logic Command are NOT recalled from Control EEprom. They will be cleared upon drive power up or following an EEprom recall operation.

Options	Reserved	Reserved	PositionEnbl	ProcsTrim En	Frict Comp	Inertia Comp	Sys Inert En	Mtr Inert En	PM Offset En	Dir Sel En	Pwr Diag En	MC Atune En	Time Axis En	TachLoss Rst	Spd S Crv En	SpdRamp Dsbl
Default	0	0	0	0	0	0	0	0	0	0	0	0	0	0	0	0
Bit	15	14	13	12	11	10	9	8	7	6	5	4	3	2	1	0

0 = False
1 = True

152 Applied LogicCmd

Displays Logic Command that is applied to the Regulators and Control Algorithms within the drive. Logic Commands come from the 32-bit Logic Command found in a connection with the Logix Controller.

Options	Reserved	Reserved	Reserved	Reserved	Reserved	Reserved	Coast Stop	CurrLim Stop	Jog 2	Reserved	UniPol Rev	UniPol Fwd	Clear Fault	Jog 1	Start	Normal Stop	Reserved	Reserved	PositionEnbl	ProcsTrim En	Frict Comp	Inertia Comp	Sys Inert En	Mtr Inert En	PM Offset En	Dir Sel En	Pwr Diag En	MC Atune En	Time Axis En	TachLoss Rst	Spd S Crv En	SpdRamp Dsbl
Default	0	1	0	1	1	0	0	0	0	1	0	0	0	0	1	0	0	0	0	0	0	0	0	0	0	0	0	0	0	0	0	0
Bit	31	30	29	28	27	26	25	24	23	22	21	20	19	18	17	16	15	14	13	12	11	10	9	8	7	6	5	4	3	2	1	0

0 = False
1 = True

No.	Name Description	Values	Linkable	Read-Write	Data Type
153	**Control Options** Set bits to configure the options for operating the drive.				

Options	Reserved	Reserved	Reserved	Reserved	Reserved	Trq Trim En	Reserved	Reserved	Reserved	Reserved	Reserved	Reserved	Reserved	Reserved	Aux Pwr Sply	Auto Tach Sw	Reserved	Reserved	OL ClsLpDsbl	Jog -NoInteg	Iq Delay	Motor Dir	2W CoastStop	3WireControl	Stop Cndt Tq	Stop in Torq	Jog - NoRamp	Jog in Torq	2WCurrLimStp	Sreg LPF 1	SRef Filt En	Bipolar SRef	
Default	0	0	0	0	0	0	0	0	0	0	0	0	0	0	0	0	0	0	0	0	0	0	0	1	0	0	0	0	0	0	0	1	0 = False
Bit	31	30	29	28	27	26	25	24	23	22	21	20	19	18	17	16	15	14	13	12	11	10	9	8	7	6	5	4	3	2	1	0	1 = True

Bit	Name	Current Function
0	Bipolar SRef	When this bit is enabled a bipolar speed reference is used. In bipolar reference mode, Par 40 [Selected Spd Ref] indicates both the speed magnitude and the direction: Positive speed reference values (+) = forward direction and negative speed reference values (–) = reverse direction. When this bit is disabled a unipolar speed reference is used. In unipolar mode, the speed reference is limited to a minimum value of zero (0). In this case Par 40 [Selected Spd Ref] supplies only the speed magnitude. The direction is determined by Par 153 [Applied LogicCmd] bits 20 [UniPol Fwd] and 21 [UniPol Rev]. The forward/reverse direction button on the HIM is one possible source for the [Applied Logic Command] direction bits. The following chart explains the effect that the direction button on the HIM has based on the condition of the "Bipolar SRef" bit: Bipolar / Reference Controlled By HIM? / HIM Direction Button Enabled / Yes / Changes the motor direction due to a HIM supplied (+) or (-) command signal Enabled / No / Has no effect on motor direction. Direction determined by sign of Par 40 [Selected Spd Ref]. Disabled / Yes / Changes the motor direction due to a HIM supplied Forward or Reverse Logic Command bit. Disabled / No / Changes the motor direction due to a HIM supplied Forward or Reverse Logic Command bit. In either Bipolar or Unipolar mode, the selected direction can be determined from the sign of Par 41 [Limited Spd Ref]. Positive values indicate forward rotation and negative values indicate reverse rotation.
1	SRef Filt En	Enables Speed Reference Lead Lag Filter-reset disables
2	Sreg LPF 1	Setting this bit will enable the speed regulator filter as a single order low pass filter
4	Jog in Torq	Overrides Par 110 [Spd/Torq ModeSel] setting when jog command received
5	Jog-NoRamp	Bypasses the Speed Reference Ramp and S-Curve
6	Stop in Torq	Overrides Par 110 [Spd/Torq ModeSel] setting when stopping
8	3WireControl	Configures for 3-wire control
11	Iq Delay	Enables Torque Current Delay option
12	Jog-NoInteg	Configures speed regulator's integrator to hold when jogging
17	Aux Pwr Sply	Enables use of Aux. Power Supply. When set to 1, Main Control Board examines internal 12V DC power to see when energized. When set to 0, examines voltage of DC Bus. This bit enables Main Control Board and DriveLogix Controller to remain energized when 3-Ø voltage is de-energized.

No.	Name Description	Values	Linkable	Read-Write	Data Type
154	**Stop Dwell Time** Sets an adjustable delay time between detecting zero speed and disabling the speed and torque regulators, when responding to a stop command. For more information, please see Stop Dwell Time on page C-5. **Important:** Consult industry and local codes when setting the value of this parameter.	Units: Sec Default: 0.0000 Min/Max: 0.0000/10.0000l	✓	✓	Real

155 Logic Status

Displays the status - condition of the drive.

Options	Reserved	Reserved	Reserved	Reserved	Reserved	Command Run	Start Active	PositionMode	Speed Mode	Torque Mode	Reserved	Spd Commis	MC Commis	MC En Ack	Above Setpt2	At Setpt 1	Reserved	At Setpt Spd	At Zero Spd	Tach Loss Sw	At Limit	Run Ready	Flash Mode	Alarm	Faulted	Jogging	Decelerating	Accelerating	Actual Dir	Command Dir	Running	Enabled
Default	0	0	0	0	0	0	0	0	0	0	0	0	0	0	0	0	0	0	0	0	0	0	0	0	0	0	0	0	0	0	0	0
Bit	31	30	29	28	27	26	25	24	23	22	21	20	19	18	17	16	15	14	13	12	11	10	9	8	7	6	5	4	3	2	1	0

0 = False
1 = True

Bit	Name	Current Function
0	Enabled	Drive is controlling motor
1	Running	Run command received & controlling motor
2	Command Dir	Commanded direction is forward
3	Actual Dir	Actual motor direction is forward
4	Accelerating	Motor is increasing speed
5	Decelerating	Motor is decreasing speed
6	Jogging	Jog command received & controlling motor
7	Faulted	Exception event that causes a fault has occurred
8	Alarm	Exception event that causes an alarm has occurred
9	Flash Mode	Flash upgrade in progress
10	Run Ready	Enable input is high & drive is fault free
11	At Limit	Speed, Power, Current or Torque is being limited, refer to *Par 304*
12	Tach Loss SW	Failure is detected in primary speed or position feedback device & drive has switched to secondary device
13	At Zero Spd	Speed feedback is within limits defined in *Par 160*
14	At Setpt Spd	Speed feedback is within limits defined in Par 41 [Limited Spd Ref] and 171 [Set Speed Lim]
15	Reserved	
16	At Setpt 1	Par 172 [Setpt 1 Data] value is within limits defined by Par 173 [Setpt1 TripPoint] and 174 [Setpt 1 Limit]
17	Above Setpt 2	Par 175 [Setpt 2 Data] value is within limits defined by Par 176 [Setpt2 TripPoint] and 177 [Setpt 2 Limit]
18	MC En Ack	Drive is controlling motor (same as enabled)
19	MC Commis	Motor control commissioning in progress
20	Spd Commis	Speed control commissioning in progress
21	Reserved	
22	Torque Mode	Par 110 [Spd/Torq ModeSel] value is 2, 3, 4, 5 or 6
23	Speed Mode	Par 110 [Spd/Torq ModeSel] value is 1 & position control is not enabled
24	Position Mode	Position control active & Par 110 [Spd/Torq ModeSel] value is not 2, 3, 4, 5 or 6
25	Start Active	Start command received & controlling motor
26	Command Run	Run command received
27-31	Reserved	

156 Run Inhibit Stat

Indicates which condition is preventing the drive from starting or running.

Options	Reserved	Reserved	Reserved	Reserved	Reserved	Reserved	Reserved	Reserved	Reserved	Reserved	Reserved	Reserved	Reserved	Reserved	Reserved	Reserved	Reserved	PM Mtr Fdbk	Motin Shtdown	Digln Config	Bus PreChrg	Encoder PPR	Jog	Start	Flash Upgrd	Power EE	Power Loss	SW I Lim Stp	SW Coast Stp	SW Ramp Stop	No Enable	Faulted
Default	0	0	0	0	0	0	0	0	0	0	0	0	0	0	0	0	0	0	0	0	0	0	0	0	0	0	0	0	0	0	0	0
Bit	31	30	29	28	27	26	25	24	23	22	21	20	19	18	17	16	15	14	13	12	11	10	9	8	7	6	5	4	3	2	1	0

0 = False
1 = True

157 Logic Ctrl State

Indicates which logic control functions are enabled.

Options	ProcsTrim En	Cmd Dir Upol	Lgx I/O Cnx	Lgx Run Mode	Reserved	Reserved	Reserved	Reserved	Reserved	Reserved	PM Offset Rq	Mtr Dir Req	Pwr Diag Req	MC Atune Req	FTD Ramp En	MC En Req	RThru Flux	DC Brake En	Mtr Sim Mode	RThru Coast	CurrRef En	Forced Spd	Torq Ref En	Spd Reg En	SReg IntgHld	CurrLim Stop	J Tst FulSpd	Inert Tst En	PositionEnbl	SRef SCrv En	SRef Ramp En	Spd Ref En
Default	0	0	0	0	0	0	0	0	0	0	0	0	0	0	0	0	0	0	0	0	0	0	0	0	0	0	0	0	0	0	0	0
Bit	31	30	29	28	27	26	25	24	23	22	21	20	19	18	17	16	15	14	13	12	11	10	9	8	7	6	5	4	3	2	1	0

0 = False
1 = True

No.	Name Description	Values	Linkable	Read-Write	Data Type
158	**Drive Logic Rslt** This is the logic output of the logic parser that combines the outputs from the DPI ports and the DriveLogix controller to determine drive control based on the masks and owners. The control bits are reflected in Par 152 [Applied LogicCmd] bits 16-31.				

Options	Reserved	Reserved	Reserved	Reserved	Reserved	Reserved	Coast Stop	CurrLim Stop	Jog 2	Reserved	UniPol Rev	UniPol Fwd	Clear Fault	Jog 1	Start	Normal Stop	Reserved	Reserved	Reserved	Reserved	Reserved	Reserved	Coast Stop	CurrLim Stop	Jog 2	Reserved	UniPol Rev	UniPol Fwd	Clear Fault	Jog 1	Start	Normal Stop
Default	0	0	0	0	0	0	0	0	0	0	0	0	0	0	0	0	0	0	0	0	0	0	0	0	0	0	0	0	0	0	0	0
Bit	31	30	29	28	27	26	25	24	23	22	21	20	19	18	17	16	15	14	13	12	11	10	9	8	7	6	5	4	3	2	1	0

0 = False
1 = True

No.	Name Description	Values	Linkable	Read-Write	Data Type
159	**DigIn ConfigStat** This parameter indicates the status of the Digital Inputs.	Default: 0 "DigIn Ok" Options: 0 "DigIn Ok"; 1 "2 Run/Starts"; 2 "Start NoStop"; 3 "Run+Latched"; 4 "Strt+UnLatch"; 5 "2 Jog1's"; 6 "2 Jog2's"; 7 "2 FwdRevrs's"			
160	**Zero Speed Lim** Establishes a band around zero speed that is used to determine when the drive considers the motor to be at zero speed.	Units: RPM Default: 17.6400 Min/Max: 0.0000/882.0000 Comm Scale: Par 4 [Motor NP RPM] = 1.0	✓	✓	Real
161	**Logic TP Sel** Enter or write a value to select logic status indication displayed in Par 162 [Logic TP Data].	Default: 0 "Reserved" Options: 0 "Reserved"; 1 "Avg Spd Ref"; 2 "Avg Spd Fdbk"; 3 "LastStopMode"; 4 "Spd Ref Sel"; 5 "Start State"; 6 "Run State"; 7 "Stop State"; 8 "PrChrg Logic"; 9 "Meas State"; 10 "Data State"; 11 "Diag State"; 12 "MC CalcState"; 13 "500us time"; 14 "500us max"; 15 "2ms time"; 16 "2ms max"; 17 "8ms time"; 18 "8ms max"; 19 "BkGnd Time"; 20 "BkGnd Max"; 21 "500us %"; 22 "2ms %"; 23 "8ms %"; 24 "BkGnd %"; 25 "RThru State"; 26 "RThru Timer"; 27 "Mtr Friction"; 28 "Sys Friction"; 29 "Iq proc time"			
162	**Logic TP Data** Displays the indication selected by Par 161 [Logic TP Sel].	Default: 0.0000 Min/Max: -/+2200000000.0000			Real
163	**Stop Oper TP Sel** Enter or write a value to select data displayed in Par 164 [StpOper TPData] at the time of the last initiated stop.	Default: 0 "Zero" Options: 0 "Zero"; 1 "Logic State"; 2 "Logic Input"; 3 "Lcl In State"; 4 "Logic Status"; 5 "Run Inhibit"; 6 "Logic Ctrl"; 7 "Mtr Ctrl Cmd"; 8 "Mtr Ctrl Ack"; 9 "Reserved"; 10 "Flt Status 1"; 11 "Flt Status 2"; 12 "Motor Speed"; 13 "Avg Spd Fdbk"; 14 "ZM1 Spd Fdbk"; 15 "Speed Ref"; 16 "Avg Spd Ref"; 17 "ZM1 Spd Ref"; 18 "SReg PI Out"; 19 "Torq Ref"; 20 "TorqRef Stat"; 21 "DC Bus Volts"; 22 "Motor Volts"; 23 "Mtr Current"; 24 "Motor Flux"; 25 "Motor Freq"; 26 "Motor Power"; 27 "Flt Status 3"			
164	**StopOper TP Data** Displays the data selected by Par 163 [Stop Oper TP Sel].	Default: 0.0000 Min/Max: -/+2200000000.0000			Real
165	**Test Status** Indicates which test (if any) is in progress.	Default: 0 "None" Options: 0 "None"; 1 "MC Autotune"; 2 "Power Diag"; 3 "Motor Direct"; 4 "PM Offset"; 5 "Mtr Inertia"; 6 "Sys Inertia"; 7 "Mtr+Sys J"			
166	**Motor Ctrl Cmmd** Displays the command bits to the Motor Control Processor from the Velocity Processor.				

Options	Reserved	Reserved	Reserved	Reserved	Reserved	Reserved	Reserved	Reserved	Reserved	Reserved	Reserved	Reserved	Reserved	Reserved	Reserved	Reserved	Fault Reset	Reserved	Reserved	Reserved	Reserved	Reserved	Reserved	Reserved	Reserved	Reserved	Base Block	Reserved	Reserved	Torque Run	Flux Run	CP Enable
Default	0	0	0	0	0	0	0	0	0	0	0	0	0	0	0	0	0	0	0	0	0	0	0	0	0	0	0	0	0	0	0	0
Bit	31	30	29	28	27	26	25	24	23	22	21	20	19	18	17	16	15	14	13	12	11	10	9	8	7	6	5	4	3	2	1	0

0 = False
1 = True

No.	Name Description	Values	Linkable	Read-Write	Data Type
167	**Motor Ctrl Ackn** Displays the Motor Control Processor's acknowledgment to the Velocity Processor for the Motor Control Command bits.				

Options	Reserved	Reserved	Reserved	Reserved	Reserved	Reserved	Reserved	Reserved	Reserved	Reserved	Reserved	Reserved	Reserved	Reserved	Reserved	Reserved	Fault Reset	Reserved	Reserved	Reserved	Reserved	Reserved	Reserved	Reserved	Reserved	Reserved	Reserved	Power Diag	Precharge	Torque Run	Flux Run	CP Enable
Default	0	0	0	0	0	0	0	0	0	0	0	0	0	0	0	0	0	0	0	0	0	0	0	0	0	0	0	0	0	0	0	0
Bit	31	30	29	28	27	26	25	24	23	22	21	20	19	18	17	16	15	14	13	12	11	10	9	8	7	6	5	4	3	2	1	0

0 = False
1 = True

No.	Name Description	Values	Linkable	Read-Write	Data Type
169	**SrLss ZeroSpdLim** Functionally equivalent to Par 160 [Zero Speed Lim], but is used exclusively in Sensorless speed mode. The value is automatically set from Par 3 [Motor NP Hertz], Par 4 [Motor NP RPM] or Par 7 [Motor Poles]. The automatic setting corresponds to the rated slip speed of the motor (synchronous speed - nameplate speed). The value can be manually set.	Units: RPM Default: 49.9975 Min/Max: 0.0000/875.0000		✓	Real
171	**Set Speed Lim** Creates a tolerance - hysteresis band around the value in Par 41 [Limited Spd Ref] for comparison to average speed feedback. The comparison controls bit 14 [At Setpt Spd] of Par 155 [Logic Status]. In general bit 14 [At Setpt Spd] turns on when the feedback is within the tolerance of the reference. Technically - Turn-on level for rising feedback = Par 41 [Limited Spd Ref] - Limit. Turn-off level for rising feedback = {Limited Spd Ref} + 2(Limit). Turn-on level for falling feedback = [Limited Spd Ref} + Limit. Turn-off level for falling feedback = [Limited Spd Ref] - 2(Limit).	Units: RPM Default: 17.6400 Min/Max: 0.0000/882.0000 Comm Scale: Par 4 [Motor NP RPM] = 1.0	✓	✓	Real
172	**Setpt 1 Data** Provides data for comparison to Par 173 [Setpt1 TripPoint], driving bit 16 [At Setpt 1] of Par 155 [Logic Status]. For more information, please see Setpt 1 Data on page C-6.	Units: P.U. Default: 0.0000 Min/Max: -/+8.0000	✓	✓	Real
173	**Setpt1 TripPoint** Provides the midpoint for operation of bit 16 [At Setpt 1] of Par 155 [Logic Status].	Units: P.U. Default: 0.1000 Min/Max: -/+8.0000	✓	✓	Real
174	**Setpt 1 Limit** Creates a tolerance - hysteresis band around the value in Par 173 [Setpt1 TripPoint]. Turn-on level for ascending data = [Setpt1 TripPoint] - [Setpt 1 Limit]. Turn-off level for ascending data = [Setpt1 TripPoint] + 2(Limit). Turn-on level for descending data = [Setpt1 TripPoint] + Limit. Turn-off level for descending data = [Setpt1 TripPoint] - 2(Limit).	Units: P.U. Default: 0.0100 Min/Max:: 0.0000/0.5000	✓	✓	Real
175	**Setpt 2 Data** Provides data for comparison to Par 177 [Setpt2 Limit], driving bit 17 [Above Setpt 2] of Par 155 [Logic Status]. For more information, please see Setpt 2 Data on page C-6.	Units: P.U. Default: 0.0000 Min/Max: -/+8.0000	✓	✓	Real
176	**Setpt2 TripPoint** Provides the midpoint for operation of bit 16 [At Setpt 1] of Par 155 [Logic Status].	Units: P.U. Default: 0.2000 Min/Max: -/+8.0000	✓	✓	Real
177	**Setpt 2 Limit** Creates a tolerance - hysteresis band around the value in Par 176 [Setpt2 TripPoint]. For positive setpoints: Turn-on level = [Setpt2 TripPoint], Turn-off level = [Setpt2 TripPoint] - Limit. For negative setpoints: Turn-on level = [Setpt2 TripPoint], Turn-off level = [Setpt2 TripPoint] + Limit.	Units: P.U. Default: 0.0100 Min/Max: 0.0000/0.5000	✓	✓	Real
180	**PI Output** The final output of the Process Control regulator. A value of 1 can represent either base motor speed, motor rated torque, or 100% for some external function.	Units: P.U. Default: 0.0000 Min/Max: -/+8.0000			Real
181	**PI Reference** The reference input for the process control regulator. A value of 1 can represent either base motor speed, motor rated torque, or 100% for some external function.	Units: P.U. Default: 0.0000 Min/Max: -/+8.0000	✓	✓	Real
182	**PI Feedback** The feedback input for the process control regulator. A value of 1 can represent either base motor speed, motor rated torque, or 100% for some external function.	Units: P.U. Default: 0.0000 Min/Max: -/+8.0000	✓	✓	Real
183	**PI Command** Set bits to configure the process control regulator - enable or disable the regulator, enable or disable the time function generator and limit generator.				

Options	Reserved	Reserved	Reserved	Reserved	Reserved	Reserved	Reserved	Reserved	Reserved	Reserved	Reserved	Reserved	Reserved	Reserved	Time Lim En	Enable
Default	0	0	0	0	0	0	0	0	0	0	0	0	0	0	0	0
Bit	15	14	13	12	11	10	9	8	7	6	5	4	3	2	1	0

0 = False
1 = True

No.	Name Description	Values	Linkable	Read-Write	Data Type
184	**PI Lpass Filt BW** Sets the bandwidth of a single pole filter applied to the error input of the Process Control regulator. The input to the filter is the difference between Par 181 [PI Reference] and Par 182 [PI Feedback]. The output of this filter is used as the input to the process control regulator.	Units: R/S Default: 0.0000 Min/Max: 0.0000/500.0000	✓	✓	Real
185	**PI Preload** Presets the integrator of the Process Control regulator.	Units: P.U. Default: 0.0000 Min/Max: -/+8.0000	✓	✓	Real

No.	Name Description	Values	Linkable	Read-Write	Data Type
186	**PI Prop Gain** Controls the proportional gain of the Process Control regulator. If the proportional gain is 1.0, the regulator output equals 1 pu for 1 pu error.	Default: 8.0000 Min/Max: 0.0000/200.0000	✓	✓	Real
187	**PI Integ Time** Controls the integral gain of the Process Control regulator. If the integrator time is 1.0, the regulator output equals 1 pu in 1 second for 1 pu error.	Units: /Sec Default: 8.0000 Min/Max: 0.0000/4000.0000	✓	✓	Real
188	**PI Integ HLim** The high limit of the integral gain channel for the Process Control regulator. A value of 1 can represent either base motor speed, motor rated torque, or 100% for some external function.	Units: P.U. Default: 0.1000 Min/Max: 0.0000/8.0000	✓	✓	Real
189	**PI Integ LLim** The low limit of the integral gain channel for the Process Control regulator. A value of 1 can represent either base motor speed, motor rated torque, or 100% for some external function.	Units: P.U. Default: -0.1000 Min/Max: -8.0000/0.0000	✓	✓	Real
190	**PI Integ Output** Displays the output value of the integral channel of the Process Control regulator. A value of 1 can represent either base motor speed, motor rated torque, or 100% for some external function.	Units: P.U. Default: 0.0000 Min/Max: -/+8.0000			Real
191	**PI High Limit** The high limit of the Process Control regulator output. A value of 1 can represent either base motor speed, motor rated torque, or 100% for some external function.	Units: P.U. Default: 0.1000 Min/Max: 0.0000/8.0000	✓	✓	Real
192	**PI Lower Limit** The low limit of the Process Control regulator output. A value of 1 can represent either base motor speed, motor rated torque, or 100% for some external function.	Units: P.U. Default: -0.1000 Min/Max: -8.0000/0.0000	✓	✓	Real
193	**PI TP Sel** Enter or write a value to select Process Control PI data displayed by Par 194 [PI TP Data].	Default: 0 "Zero" Options: 0 "Zero" 1 "PI Error" 2 "LPF Output" 3 "P Gain Term" 4 "Reg Output" 5 "On Intg Lim" 6 "On Out Limit" 7 "Extern Hold" 8 "Hold Status" 9 "Enbl Status" 10 "Time Axis En"			
194	**PI TP Data** Displays the data selected by Par 193 [PI TP Sel].	Units: P.U. Default: 0.0000 Min/Max: -/+8.0000			Real
200	**Time Axis Rate** Sets rate (1/sec) for the Time Function Generator to ramp from and output of 0 to 1 and from 1 to 0.	Units: /Sec Default: 1.0000 Min/Max: 0.0100/20.0000	✓	✓	Real
201	**Time Axis Output** The output of the Time Function Generator. When the Time Function Generator is enabled by Par 183 [PI Command] bit 1 [Enable] or Par 151 [Logic Command] bit 3 [Time Axis En], the value of this parameter ramps from 0 to 1 at a rate determined by Par 200 [Time Axis Rate]. Conversely, when the Function Generator is disabled, the value of this parameter ramps from 1 to 0.	Default: 0.0000 Min/Max: 0.0000/1.0000			Real
204	**LimGen Y axis Mx** Sets Par 207 [Limit Gen Hi Out] and Par 208 [Limit Gen Lo Out] when the absolute value of Par 206 [LimGen X axis In] is greater than or equal to 1.	Units: P.U. Default: 0.2500 Min/Max: 0.0000/8.0000	✓	✓	Real
205	**LimGen Y axis Mn** Sets Par 207 [Limit Gen Hi Out] and Par 208 [Limit Gen Lo Out] when the absolute value of Par 206 [LimGen X axis In] is equal to 0.	Units: P.U. Default: 0.0500 Min/Max: 0.0000/8.0000	✓	✓	Real
206	**LimGen X axis In** The X axis input to the Limit Generator. Typically this parameter is linked to a speed reference or to Par 201 [Time Axis Output].	Default: 0.0000 Min/Max: -/+8.0000	✓	✓	Real
207	**Limit Gen Hi Out** Displays the positive output of the Limit Generator. When Par 206 [Limit Gen X axis In] is greater than or equal to 1, this value equals Par 204 [LimGen Y axis Mx]. When Par 206 [LimGen X axis In] is equal to 0, this value equals Par 205 [LimGen Y axis Mn]. For values of X Axis input between 0 and 1, the value of this parameter is interpolated from Y axis min and max values. Typically this parameter is linked to Par 191 [PI High Limit].	Units: P.U. Default: 8.0000 Min/Max: 0.0000/8.0000			Real
208	**Limit Gen Lo Out** Displays the negative output of the Limit Generator. The value of this parameter is the negative of Par 207 [Limit Gen Hi Out]. Typically it is linked to Par 192 [PI Lower Limit].	Units: P.U. Default: -8.0000 Min/Max: -8.0000/0.0000			Real

No.	Name Description	Values	Linkable	Read-Write	Data Type
210	**PeakDtct Ctrl In** Sets the configuration of the two peak/level detectors. • When set (in Set mode), bit 0 [Peak 1 Set] and 4 [Peak 2 Set] are level detectors that causes their output bit to match their preset bit value (Par 214 [PeakDtct1 Preset] and Par 218 [PeakDtct2 Preset], respectively). • When set (in Hold mode), bit 1 [Peak 1 Hold] and 5 [Peak 2 Hold] are level detectors that cause their output to hold the present min/max. • When bits 1 and 4 (Set mode) and 2 and 5 (Hold mode) are off, their output bit captures the peak min/max. • Bits 2 [Peak 1 Sel] and 6 [Peak 2 Sel] determine if the peak/level detectors are positive of negative. If the bit is set the detector detects positive peaks or levels above the preset. If the bit is not set the detector detects negative peaks ("valleys") or levels below the preset. The output shows the min. or max. peak.				
211	**Peak Ctrl Status** Status of the peak/level detectors. A peak detector sets its bit when it detects a peak or when its input exceeds its preset - depending on the selected mode.				
212	**PeakDtct1 In Int** Integer input to the first peak/level detector.	Default: 0 Min/Max: -/+2147483648	✓	✓	32-bit Integer
213	**PkDtct1 In Real** Floating point input to the first peak/level detector.	Default: 0.0000 Min/Max: -/+2200000000.0000	✓	✓	Real
214	**PeakDtct1 Preset** The first peal/level detector (in set or hold modes) compares this value to its input (Par 212 [PeakDtct1 In Int] or 213 [PkDtct1 In Real]) for level detection. When the detector trips (in set mode) it transfers the value of this parameter to its output (Par 215 [PeakDetect1 Out]).	Default: 0.0000 Min/Max: -/+2200000000.0000	✓	✓	Real
215	**PeakDetect1 Out** Output from the first peak/level detector.	Default: 0.0000 Min/Max: -/+2200000000.0000			Real
216	**PeakDtct2 In Int** Integer input to second peak/level detector.	Default: 0 Min/Max: -/+2147483648	✓	✓	32-bit Integer
217	**PkDtct2 In Real** Floating point input to second peak/level detector.	Default: 0.0000 Min/Max: -/+2200000000.0000	✓	✓	Real
218	**PeakDtct2 Preset** The second detector (in set or hold modes) compares this value to its input (Par 216 [PeakDtct2 In Int] or 217 [PkDtct2 In Real]) for level detection. When the detector trips (in set mode) it transfers the value of this parameter to its output (Par 219 [PeakDetect2 Out]).	Default: 0.0000 Min/Max: -/+2200000000.0000	✓	✓	Real
219	**PeakDetect2 Out** Output from the second peak/level detector.	Default: 0.0000 Min/Max: -/+2200000000.0000			Real
220	**Spd Observer BW** Sets the internal bandwidth for the speed feedback observer. The setting should be as high a possible, preferably at least 6 times the value of Par 90 [Spd Reg BW]. A setting of 1000 rad/sec is reasonable for most applications. The speed observer is bypassed when set to zero.	Units: R/S Default: 0.0000 Min/Max: 0.0000/1200.0000	✓	✓	Real
221	**Load Estimate** Displays the estimated load torque, which is the side effect of the speed observer and does not include torque to accelerate or decelerate the motor if the inertia input is correct. This value is provided for display purposes.	Units: P.U. Default: 0.0000 Min/Max: -/+8.0000			Real
222	**Motor Fdbk Sel** Enter or write a value to select the primary motor speed feedback device.	Default: 0 "Encoder 0" Options: 0 "Encoder 0", 1 "Encoder 1", 2 "Sensorless", 3 "Reserved", 4 "Motor Sim", 5 "FB Opt Port0", 6 "FB Opt Port1"			
223	**Mtr Fdbk Alt Sel** Selects the alternate feedback device if the feedback selected from Par 222 [Motor Fdbk Sel] fails.	Default: 0 "Encoder 0" Options: 0 "Encoder 0", 1 "Encoder 1", 2 "Sensorless", 3 "Reserved", 4 "Motor Sim", 5 "FB Opt Port0", 6 "FB Opt Port1"			

Options

	Reserved	Reserved	Reserved	Reserved	Reserved	Reserved	Reserved	Reserved	Reserved	Peak 2 Sel	Peak 2 Hold	Peak 2 Set	Reserved	Peak 1 Sel	Peak 1 Hold	Peak 1 Set
Default	0	0	0	0	0	0	0	0	0	0	0	0	0	0	0	0
Bit	15	14	13	12	11	10	9	8	7	6	5	4	3	2	1	0

0 = False
1 = True

Options

	Reserved	Reserved	Reserved	Reserved	Reserved	Reserved	Reserved	Reserved	Reserved	Reserved	Reserved	Reserved	Reserved	Reserved	Peak 2 Chng	Peak 1 Chng
Default	0	0	0	0	0	0	0	0	0	0	0	0	0	0	0	0
Bit	15	14	13	12	11	10	9	8	7	6	5	4	3	2	1	0

0 = False
1 = True

No.	Name Description	Values	Linkable	Read-Write	Data Type
224	**TachSwitch Level** Sets the detection level for the automatic tach loss switchover routine. A drop in feedback speed at this percent of rated speed over 0.5 msec will cause a tach switch from the primary to alternate feedback device. This feature is enabled when bit 16 [Auto Tach Sw] in Par 153 [Control Options] is selected. Setting this level lower will make the tach switch detection more sensitive and lower the minimum speed at which a tach switch can occur. Setting this level higher will make the tach switch less sensitive and raise the minimum speed for tach switch detection.	Units: % Default: 10.0000 Min/Max: 5.0000/25.0000		✓	
226	**Virtual Edge/Rev** Set the EPR (Edges Per Revolution) scaling for calculating motor position. Used in the calculation of the position feedback such as Par 70 [MtrSpd Sim Posit].	Units: EPR Default: 4096 Min/Max: 10/16777216		✓	32-bit Integer
227	**Spd Obs Trq Gain** Multiplication factor for the inertia input to the Speed Observer. If the specified inertia differs from actual, this value is used to fine tune the inertia value input to the observer. Normally set to 1.	Default: 1.0000 Min/Max: 0.0000/2.0000	✓	✓	Real
230	**Encdr0 Position** Displays the position feedback (accumulator) from encoder 0. The value changes by a value of 4 times the Pulses Per Revolution (PPR) rating of the encoder for each full revolution of the encoder shaft. Used by the Velocity Position Loop (VPL) to close the position loop if the position control is selected.	Default: 0 Min/Max: -/+2147483648			32-bit Integer
231	**Encdr0 Spd Fdbk** Displays the speed feedback from encoder 0. Calculated from the change of Par 230 [Encdr0 Position] and Par 232 [Encoder0 PPR].	Units: RPM Default: 0.0000 Min/Max: -/+14112.0000 Comm Scale: Par 4 [Motor NP RPM] = 1.0			Real
232	**Encoder0 PPR** Sets the PPR rating of the feedback device connected to the Encoder 0 input.	Units: PPR Default: 1024 Min/Max: 10/20000		✓	16-bit Integer

No.	Name Description	Values	Linkable	Read-Write	Data Type

233 **Encdr0 Config**

Specifies the configuration options for the Encoder 0.

- Bits 0 [Enc Filt bt0], 1 [Enc Filt bt1], 2 [Enc Filt bt2], and 3 [Enc Filt bt3] configure the encoder input filter (see Table 233A: Encoder Input Filter Settings). The filter requires the input signal to be stable for the specified time period. Input transitions within the filter time setting will be ignored.
- Bits 4 [Encdr 4x] and 5 [Encdr A Phs] determine how the encoder channel A and B signals will be interpreted. Typically, both encoder phases A and B are used so that direction information is available. Par 230 [Encdr0 Position] counts up for forward rotation and down for reverse rotation. If bit 5 [Encdr A Phs] is set, then the B phase signal is ignored. As a result, the encoder position will only increase, regardless of rotation direction. Bits 4 and 5 together also determine the number of edges counted per encoder pulse (see Table 233B: Multiplier and Direction Settings). "4x" sampling counts both rise and fall of both A and B encoder phases, hence 4 edges per pulse. In 4x mode, the encoder position will change by four times the encoder pulses per revolution (PPR) rating per encoder revolution (e.g., it increments the value in Par 230 [Encdr0 Position] by 4096 for one revolution of a 1024 PPR encoder).
- Bit 6 [Encdr Dir] inverts the channel A input, thus reversing the direction of the feedback.
- Bit 9 [Edge Time] configures the method of sampling used by the VPL. Setting this bit chooses "Edge to Edge" sampling, while resetting this bit to zero chooses "Simple Difference" sampling. "Simple Difference" sampling calculates speed by examining the difference between pulse counts over a fixed sample time. "Edge to Edge" sampling adjusts the sample time to synchronize with the position count updates from the daughter card - improving the accuracy of the speed calculation.
- Bits 12 [SmplRate bt0] through 15 [SmplRate bt3] configure the sample interval for measuring speed (see Table 233C: Encoder Sample Interval Settings). Increasing the encoder sample interval improves speed measurement near zero speed. Decreasing allows the speed control regulator to perform with high gains at high speeds.

Options	Reserved	Reserved	Reserved	Reserved	Reserved	Reserved	Reserved	Reserved	Reserved	Reserved	Reserved	Reserved	Reserved	Reserved	Reserved	Reserved	SmplRate bt3	SmplRate bt2	SmplRate bt1	SmplRate bt0	Reserved	Reserved	Edge Time	Reserved	Reserved	Encdr Dir	Encdr A Phs	Encdr 4x	Enc Filt bt3	Enc Filt bt2	Enc Filt bt1	Enc Filt bt0	
Default	0	0	0	0	0	0	0	0	0	0	0	0	0	0	0	0	0	0	1	0	0	0	1	0	0	0	0	1	1	0	1	0	0 = False
Bit	31	30	29	28	27	26	25	24	23	22	21	20	19	18	17	16	15	14	13	12	11	10	9	8	7	6	5	4	3	2	1	0	1 = True

Table 233A: Encoder Input Filter Settings

Bit 3	2	1	0	Encoder Bit Filter Settings
0	0	0	0	Filter disabled
0	0	0	1	100 ns filter
0	0	1	0	200 ns filter
0	0	1	1	300 ns filter
0	1	0	0	400 ns filter
0	1	0	1	500 ns filter
0	1	1	0	600 ns filter
0	1	1	1	700 ns filter
1	0	0	0	800 ns filter (default setting)
1	0	0	1	900 ns filter
1	0	1	0	1000 ns filter
1	0	1	1	1100 ns filter
1	1	0	0	1200 ns filter
1	1	0	1	1300 ns filter
1	1	1	0	1400 ns filter
1	1	1	1	1500 ns filter

Table 233B: Multiplier and Direction Settings

Bit 5	4	Mult	Directions	Comments
0	0	2x	fwd/rev	Counts rise/fall of phase A, phase B only used to find direction
0	1	4x	fwd/rev	Counts rise/fall of both A and B phases (default setting)
1	0	1x	fwd only	Counts rise of phase A. Phase B ignored.
1	1	2x	fwd only	Counts rise of phase A. Phase B ignored.

Table 233C: Encoder Sample Interval Settin

Bit 15	14	13	12	Encoder Sample Interval Settings
0	0	0	0	0.5 ms
0	0	0	1	0.5 ms (min. setting)
0	0	1	0	1.0 ms
0	0	1	1	1.5 ms
0	1	0	0	2.0 ms (default setting)
0	1	0	1	2.5 ms
0	1	1	0	3.0 ms
0	1	1	1	3.5 ms
1	0	0	0	4.0 ms
1	0	0	1	4.5 ms
1	0	1	0	5.0 ms
1	0	1	1	5.5 ms
1	1	0	0	6.0 ms (max. setting)
1	1	0	1	6.0 ms
1	1	1	0	6.0 ms
1	1	1	1	6.0 ms

234 **Encdr0 Error**

Indicates the error status of the Encoder 0.

Options	Reserved	Reserved	Reserved	Reserved	Reserved	Reserved	Reserved	Reserved	Reserved	Reserved	Reserved	Reserved	Reserved	Reserved	Reserved	Reserved	Reserved	Reserved	Reserved	Reserved	Reserved	Reserved	Reserved	Reserved	Reserved	Reserved	Reserved	Reserved	Phase Level	Phase Loss	Quad Loss	Encdr Missing	
Default	0	0	0	0	0	0	0	0	0	0	0	0	0	0	0	0	0	0	0	0	0	0	0	0	0	0	0	0	0	0	0	0	0 = False
Bit	31	30	29	28	27	26	25	24	23	22	21	20	19	18	17	16	15	14	13	12	11	10	9	8	7	6	5	4	3	2	1	0	1 = True

235 **Port0 Regis Ltch**

Displays the registration data of port 0. Indicates the position reference counter value latched by the external strobes. The strobe signal used to trigger the latch is configurable by Par 236 [Port0 Regis Cnfg].

Values	Linkable	Read-Write	Data Type
Default: 0 Min/Max: -/+2147483648			32-bit Integer

No.	Name Description	Values	Linkable	Read-Write	Data Type

236 **Port0 Regis Cnfg**

Configures the registration latch at port 0.

- Bit 0 [RL Encdr1 Sel] selects the encoder for the input source of latched data. Setting bit 0 selects Encoder 1, resetting the bit to zero selects Encoder 0.
- Bits 1 [RL Trig Src0] and 2 [RL Trig Src1] select the trigger source (see Table 236A: Trigger Source Settings).
- Bits 3 [RL Trig Edg0] and 4 [RL Trig Edg1] select which edges signal the position (see Table 236B: Edge Selection Settings).
- Bits 5 [RL Dir Rev] and 6 [RL Dir Fwd] set the direction of position capture (see Table 236C: Trigger Source Settings).
- Bits 8 [DI Filt bt0], 9 [DI Filt bit1], 10 [DI Filt bt2], and 11 [DI Filt bit3] configure a filter for the digital input 1 and 2 (see Table 236D: Filter Settings). The filter requires the input signal to be stable for the specified time period. Input transitions within the filter time setting will be ignored.

Options	Reserved	Reserved	Reserved	Reserved	Reserved	Reserved	Reserved	Reserved	Reserved	Reserved	Reserved	Reserved	Reserved	Reserved	Reserved	Reserved	Reserved	Reserved	Reserved	Reserved	DI Filt bit3	DI Filt bit2	DI Filt bi1	DI Filt bit0	Reserved	RL Dir Fwd	RL Dir Rev	RL Trig Edg1	RL Trig Edg0	RL Trig Src1	RL Trig Src0	RL Encdr1Sel
Default	0	0	0	0	0	0	0	0	0	0	0	0	0	0	0	0	0	0	0	0	0	0	0	0	0	1	1	0	0	0	1	1
Bit	31	30	29	28	27	26	25	24	23	22	21	20	19	18	17	16	15	14	13	12	11	10	9	8	7	6	5	4	3	2	1	0

0 = False
1 = True

Table 236A: Trigger Source Settings

Bit 2	1	
0	0	Digital Input 2 AND Encoder 0 (Primary Encoder) Z Phase
0	1	Digital Input 3 (default setting)
1	0	Digital Input 2
1	1	Encoder 0 (Primary Encoder) Z Phase

Table 236B: Edge Selection Settings

Bit 4	3	
0	0	Capture position on rising edge
0	1	Capture position on falling edge
1	0	Capture position on both edges
1	1	Disable capture

Table 236C: Trigger Source Settings

Bit 6	5	
0	0	Disable capture
0	1	Capture position during Reverse rotation
1	0	Capture position during Forward rotation
1	1	Capture position during either rotation

Table 236D: Filter Settings

Bit 11	10	9	8	Input Filter Setting
0	0	0	0	Filter disabled
0	0	0	1	100 ns filter
0	0	1	0	200 ns filter
0	0	1	1	300 ns filter
0	0	1	1	300 ns filter
0	1	0	0	400 ns filter
0	1	0	1	500 ns filter
0	1	1	0	600 ns filter
0	1	1	1	700 ns filter
1	0	0	0	800 ns filter (default setting)
1	0	0	1	900 ns filter
1	0	1	0	1000 ns filter
1	0	1	1	1100 ns filter
1	1	0	0	1200 ns filter
1	1	0	1	1300 ns filter
1	1	1	0	1400 ns filter
1	1	1	1	1500 ns filter

237 **Port0 Regis Ctrl**

Configures the registration control for port 0.

- Set bit 0 [Arm Request] to arm the registration logic for the next trigger event. The particular latch will be armed and ready to be strobed on the next occurrence of the trigger input.
- Set bit 1 [DisArm Req] to disarm the registration logic for next trigger event.

Options	Reserved	Reserved	Reserved	Reserved	Reserved	Reserved	Reserved	Reserved	Reserved	Reserved	Reserved	Reserved	Reserved	Reserved	Reserved	Reserved	Reserved	Reserved	Reserved	Reserved	Reserved	Reserved	Reserved	Reserved	Reserved	Reserved	Reserved	Reserved	Reserved	Reserved	Disarm Req	Arm Request
Default	0	0	0	0	0	0	0	0	0	0	0	0	0	0	0	0	0	0	0	0	0	0	0	0	0	0	0	0	0	0	0	0
Bit	31	30	29	28	27	26	25	24	23	22	21	20	19	18	17	16	15	14	13	12	11	10	9	8	7	6	5	4	3	2	1	0

0 = False
1 = True

238 **Port0 Regis Stat**

Indicates the registration control status of port 0.

- Bit 0 [Armed] indicates the registration latch is armed.
- Bit 1 [Found] indicates the registration event has triggered the latch.

Options	Reserved	Reserved	Reserved	Reserved	Reserved	Reserved	Reserved	Reserved	Reserved	Reserved	Reserved	Reserved	Reserved	Reserved	Reserved	Reserved	Reserved	Reserved	Reserved	Reserved	Reserved	Reserved	Reserved	Reserved	Reserved	Reserved	Reserved	Reserved	Reserved	Reserved	Found	Armed
Default	0	0	0	0	0	0	0	0	0	0	0	0	0	0	0	0	0	0	0	0	0	0	0	0	0	0	0	0	0	0	0	0
Bit	31	30	29	28	27	26	25	24	23	22	21	20	19	18	17	16	15	14	13	12	11	10	9	8	7	6	5	4	3	2	1	0

0 = False
1 = True

240 **Encdr1 Position**

Displays the position feedback (accumulator) from Encoder 1. The value changes by a value of 4 times the Pulses Per Revolution (PPR) rating of the encoder for each full revolution of the encoder shaft. Used by the VPL to close the position loop if the position control is selected.

Values		Linkable	Read-Write	Data Type
Default:	0			32-bit Integer
Min/Max:	-/+2147483648			

No.	Name Description	Values	Linkable	Read-Write	Data Type
241	**Encdr1 Spd Fdbk** Displays the speed feedback from Encoder 1. Calculated from the change of Par 240 [Encdr1 Position] and Par 242 [Encoder1 PPR].	Units: RPM Default: 0 Min.Max: -/+14112.0000 Comm Scale: Par 4 [Motor NP RPM] = 1.0			Real
242	**Encoder1 PPR** Sets the PPR rating of the feedback device connected to the Encoder 1 input.	Units: PPR Default: 1024 Min/Max: 10/20000			16-bit Integer

243 **Encdr1 Config**

Specifies the configuration options for the Encoder 1.

- Bits 0 [Enc Filt bt0], 1 [Enc Filt bt1], 2 [Enc Filt bt2], and 3 [Enc Filt bt3] configure encoder input filter (see Table 243A: Trigger Source Settings). The filter requires the input signal to be stable for the specified time period. Input transitions within the filter time setting will be ignored.
- Bits 4 [Encdr 4x] and 5 [Encdr A Phs] determine how the encoder channel A and B signals will be interpreted. Typically, both encoder phases A and B are used so that direction information is available. The Par 240 [Encdr1 Position] counts up for forward rotation and down for reverse rotation. If bit 5 is set, then the B phase signal is ignored. As a result, the encoder position will only increase, regardless of rotation direction. Bits 4 and 5 together also determine the number of edges counted per encoder pulse (see Table 243B: Encoder Sample Interval Settings). "4x" sampling counts both rise and fall of both A and B encoder phases, hence 4 edges per pulse. In 4x mode, the encoder position will change by four times the encoder pulses per revolution rating (PPR) per encoder revolution (e.g., it increments the value in Par 240 [Encdr1 Position] by 4096 for one revolution of a 1024 PPR encoder).
- Bit 6 [Encdr Dir] inverts the channel A input, thus reversing the direction of the feedback.
- Bit 9 [Edge Time] configures the method of sampling used by the Velocity Position Loop (VPL). Setting the bit chooses "Edge to Edge" sampling, while resetting the bit to zero chooses "Simple Difference" sampling. "Simple Difference" sampling calculates speed by examining the difference between pulse counts over a fixed sample time. "Edge to Edge" sampling adjusts the sample time to synchronize with the position count updates from the daughter card - improving the accuracy of the speed calculation.
- Bits 12 [SmplRate bt0] through 15 [SmplRate bt3] configure the sample interval for measuring speed (see Table 243C: Channel Interpretation Settings). Increasing the encoder sample interval improves speed measurement near zero speed. Decreasing allows the speed control regulator to perform with high gains at high speeds.

Options	Reserved	Reserved	Reserved	Reserved	Reserved	Reserved	Reserved	Reserved	Reserved	Reserved	Reserved	Reserved	Reserved	Reserved	Reserved	Reserved	SmplRate bt3	SmplRate bt2	SmplRate bt1	SmplRate bt0	Reserved	Reserved	Edge Time	Reserved	Reserved	Encdr Dir	Encdr A Phs	Encdr 4x	Enc Filt bt3	Enc Filt bt2	Enc Filt bt1	Enc Filt bt0	
Default	0	0	0	0	0	0	0	0	0	0	0	0	0	0	0	0	0	0	1	0	0	0	1	0	0	0	0	1	1	0	1	0	0 = False
Bit	31	30	29	28	27	26	25	24	23	22	21	20	19	18	17	16	15	14	13	12	11	10	9	8	7	6	5	4	3	2	1	0	1 = True

Table 243A: Trigger Source Settings

Bit 3	2	1	0	Input Filter Setting
0	0	0	0	Filter disabled
0	0	0	1	100 ns filter
0	0	1	0	200 ns filter
0	0	1	1	300 ns filter
0	0	1	1	300 ns filter
0	1	0	0	400 ns filter
0	1	0	1	500 ns filter
0	1	1	0	600 ns filter
0	1	1	1	700 ns filter
1	0	0	0	800 ns filter (default setting)
1	0	0	1	900 ns filter
1	0	1	0	1000 ns filter
1	0	1	1	1100 ns filter
1	1	0	0	1200 ns filter
1	1	0	1	1300 ns filter
1	1	1	0	1400 ns filter
1	1	1	1	1500 ns filter

Table 243C: Channel Interpretation Settings

Bit 15	14	13	12	Encoder Sample Interval Settings
0	0	0	0	0.5 ms
0	0	0	1	0.5 ms (min. setting)
0	0	1	0	1.0 ms
0	0	1	1	1.5 ms
0	1	0	0	2.0 ms (default setting)
0	1	0	1	2.5 ms
0	1	1	0	3.0 ms
0	1	1	1	3.5 ms
1	0	0	0	4.0 ms
1	0	0	1	4.5 ms
1	0	1	0	5.0 ms
1	0	1	1	5.5 ms
1	1	0	0	6.0 ms (max. setting)
1	1	0	1	6.0 ms
1	1	1	0	6.0 ms
1	1	1	1	6.0 ms

Table 243B: Encoder Sample Interval Settings

Bit 5	4	Mult.	Directions	Comments
0	0	2x	fwd/rev	Counts rise/fall of phase A, phase B only used to find direction
0	1	4x	fwd/rev	Counts rise/fall of both A and B phases (default setting)
1	0	1x	fwd only	Counts rise of phase A. Phase B ignored.
1	1	2x	fwd only	Counts rise of phase A. Phase B ignored.

No.	Name Description	Values	Linkable	Read-Write	Data Type

244 **Encdr1 Error**
Indicates the error status of Encoder 1.

Options	Reserved	Reserved	Reserved	Reserved	Reserved	Reserved	Reserved	Reserved	Reserved	Reserved	Reserved	Reserved	Reserved	Reserved	Reserved	Reserved	Reserved	Reserved	Reserved	Reserved	Reserved	Reserved	Reserved	Reserved	Reserved	Reserved	Reserved	Reserved	Reserved	Phase Level	Phase Loss	Quad Loss	Encdr Missing
Default	0	0	0	0	0	0	0	0	0	0	0	0	0	0	0	0	0	0	0	0	0	0	0	0	0	0	0	0	0	0	0	0	0
Bit	31	30	29	28	27	26	25	24	23	22	21	20	19	18	17	16	15	14	13	12	11	10	9	8	7	6	5	4	3	2	1	0	

0 = False
1 = True

245 **Port1 Regis Ltch**
Displays the registration data of port 1. Indicates the position reference counter value latched by the external strobes. The strobe signal used to trigger the latch is configurable by Par 246 [Port1 Regis Cnfg].

Default: 0
Min/Max: -/+2147483648

32-bit Integer

246 **Port1 Regis Cnfg**
Configures the registration latch at port 0.

- Bit 0 [RL Encdr1 Sel] selects the encoder for the input source of latched data. Setting bit 0 selects encoder 1, resetting the bit to zero selects encoder 0.
- Bits 1 [RL Trig Src0] and 2 [RL Trig Src1] select the trigger source (see Table 246A: Trigger Source Settings).
- Bits 3 [RL Trig Edg0] and 4 [RL Trig Edg1] select which edges signal the position (see Table 246B: Edge Selection Settings).
- Bits 5 [RL Dir Rev] and 6 [RL Dir Fwd] set the direction of position capture (see Table 246C: Direction Settings).
- Bits 8 [Ext Filt 1], 9 [Ext Filt 2], 10 [Ext Filt 3], and 11 [Ext Filt 4] configure a filter for the digital input 1 and 2 (seeTable 246D: Filter Settings). The filter requires the input signal to be stable for the specified time period. Input transitions within the filter time setting will be ignored.

Options	Reserved	Reserved	Reserved	Reserved	Reserved	Reserved	Reserved	Reserved	Reserved	Reserved	Reserved	Reserved	Reserved	Reserved	Reserved	Reserved	Reserved	Reserved	Reserved	Reserved	DI Filt bit3	DI Filt bit2	DI Filt bit1	DI Filt bit0	Reserved	RL Dir Fwd	RL Dir Rev	RL Trig Edg1	RL Trig Edg0	RL Trig Src1	RL Trig Src0	RL Encdr1Sel
Default	0	0	0	0	0	0	0	0	0	0	0	0	0	0	0	0	0	0	0	0	0	0	0	0	0	1	1	0	0	0	1	1
Bit	31	30	29	28	27	26	25	24	23	22	21	20	19	18	17	16	15	14	13	12	11	10	9	8	7	6	5	4	3	2	1	0

0 = False
1 = True

Table 246A: Trigger Source Settings

Bit 2	1	
0	0	Digital Input 2 AND Encoder 0 (Primary Encoder) Z Phase
0	1	Digital Input 3 (default setting)
1	0	Digital Input 2
1	1	Encoder 0 (Primary Encoder) Z Phase

Table 246B: Edge Selection Settings

Bit 4	3	
0	0	Capture position on rising edge
0	1	Capture position on falling edge
1	0	Capture position on both edges
1	1	Disable capture

Table 246C: Direction Settings

Bit 6	5	
0	0	Disable capture
0	1	Capture position during Reverse rotation
1	0	Capture position during Forward rotation
1	1	Capture position during either rotation

Table 246D: Filter Settings

Bit 11	10	9	8	Input Filter Setting
0	0	0	0	Filter disabled
0	0	0	1	100 ns filter
0	0	1	0	200 ns filter
0	0	1	1	300 ns filter
0	0	1	1	300 ns filter
0	1	0	0	400 ns filter
0	1	0	1	500 ns filter
0	1	1	0	600 ns filter
0	1	1	1	700 ns filter
1	0	0	0	800 ns filter (default setting)
1	0	0	1	900 ns filter
1	0	1	0	1000 ns filter
1	0	1	1	1100 ns filter
1	1	0	0	1200 ns filter
1	1	0	1	1300 ns filter
1	1	1	0	1400 ns filter
1	1	1	1	1500 ns filter

247 **Port1 Regis Ctrl**
Configures the registration control for port 1.

- Set bit 0 [Arm Request] to arm the registration logic for the next trigger event. The particular latch will be armed and ready to be strobed on the next occurrence of the trigger input.
- Set bit 1 [DisArm Req] to disarm the registration logic for next trigger event.

Options	Reserved	Reserved	Reserved	Reserved	Reserved	Reserved	Reserved	Reserved	Reserved	Reserved	Reserved	Reserved	Reserved	Reserved	Reserved	Reserved	Reserved	Reserved	Reserved	Reserved	Reserved	Reserved	Reserved	Reserved	Reserved	Reserved	Reserved	Reserved	Reserved	Reserved	Disarm Req	Arm Request
Default	0	0	0	0	0	0	0	0	0	0	0	0	0	0	0	0	0	0	0	0	0	0	0	0	0	0	0	0	0	0	0	0
Bit	31	30	29	28	27	26	25	24	23	22	21	20	19	18	17	16	15	14	13	12	11	10	9	8	7	6	5	4	3	2	1	0

0 = False
1 = True

No.	Name Description	Values	Linkable	Read-Write	Data Type

248 Port1 Regis Stat

Indicates the registration control status of port 0.

- Bit 0 [Armed] indicates the registration latch is armed.
- Bit 1 [Found] indicates the registration event has triggered the latch.

Options	Reserved	Reserved	Reserved	Reserved	Reserved	Reserved	Reserved	Reserved	Reserved	Reserved	Reserved	Reserved	Reserved	Reserved	Reserved	Reserved	Reserved	Reserved	Reserved	Reserved	Reserved	Reserved	Reserved	Reserved	Reserved	Reserved	Reserved	Reserved	Reserved	Reserved	Armed	Found
Default	0	0	0	0	0	0	0	0	0	0	0	0	0	0	0	0	0	0	0	0	0	0	0	0	0	0	0	0	0	0	0	0
Bit	31	30	29	28	27	26	25	24	23	22	21	20	19	18	17	16	15	14	13	12	11	10	9	8	7	6	5	4	3	2	1	0

0 = False
1 = True

249 Fdbk Option ID

Displays information about the Feedback Option.

- Bits 15-11 indicate Module ID Number.
- Bits 10-6 indicate Version Number.
- Bits 5-3 indicate Revision Number High.
- Bits 2-0 indicate Revision Number Low.

Hexadecimal 1000 indicates resolver, hexadecimal 2000 indicates old high-resolution board, and hexadecimal 2040 indicates new high-resolution board.

Options:

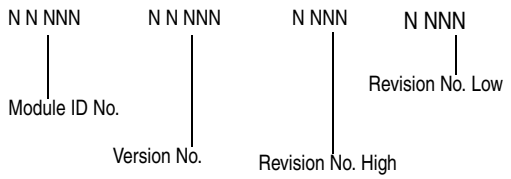

250 FB Opt0 Posit

Displays the position feedback (accumulator) from the feedback option card port 0.

Default: 0
Min/Max: -/+2147483648
Linkable: Read-Write: Data Type: 32-bit Integer

251 FB Opt0 Spd Fdbk

Displays the speed feedback from the feedback option card port 0.

Units: RPM
Default: 0.0000
Min/Max: -/+14000.0000
Comm Scale: Par 4 [Motor NP RPM] = 1.0
Linkable: Read-Write: Data Type: Floating Point

253 Opt 0 Regis Ltch

Displays the registration data of the feedback option card port 0. The registration data is the position reference counter value latched by the external strobes. The strobe signal used to trigger the latch is configurable by the Par P254 [Opt 0 Regis Cnfg].

Default: 0
Min/Max: -/+2147483648
Linkable: Read-Write: Data Type: 32-bit Integer

254 Opt 0 Regis Cnfg

Configures the registration latch for port 0 of the feedback option card.

- Bits 3 [RL Trig Edg0] and 4 [RL Trig Edg1] select which trigger edges signal the position (see Table 254A: Trigger Source Settings).
- Bits 5 [RL Dir Rev] and 6 [RL Dir Fwd] set the direction of position capture (see Table 254B: Direction Settings).
- Bits 8 [RL Filt bit0] -11 [RL Filt bit3] configure a digital filter for the registration trigger signal. This filter can be used to reject spurious noise. The filter works by waiting a programmed time before deciding that the signal is valid. This waiting imposes a mandatory delay in the registration signal. The filter delay is programmable in increments of 100 nanoseconds from 0 (or no delay) up to 700 nanoseconds.

Options	Reserved	Reserved	Reserved	Reserved	Reserved	Reserved	Reserved	Reserved	Reserved	Reserved	Reserved	Reserved	Reserved	Reserved	Reserved	Reserved	Reserved	Reserved	Reserved	Reserved	RL Filt bit3	RL Filt bit2	RL Filt bit1	RL Filt bit0	Reserved	RL Dir Fwd	RL Dir Rev	RL Trig Edg1	RL Trig Edg0	Reserved	Reserved	Reserved
Default	0	0	0	0	0	0	0	0	0	0	0	0	0	0	0	0	0	0	0	0	1	0	0	0	0	1	1	0	0	0	0	0
Bit	31	30	29	28	27	26	25	24	23	22	21	20	19	18	17	16	15	14	13	12	11	10	9	8	7	6	5	4	3	2	1	0

0 = False
1 = True

Table 254A: Trigger Source Settings

Bit 4	Bit 3	
0	0	Capture position on rising edge
0	1	Capture position on falling edge
1	0	Capture position on both edges
1	1	Disable capture

Table 254B: Direction Settings

Bit 6	Bit 5	
0	0	Disable capture
0	1	Capture position during Reverse rotation
1	0	Capture position during Forward rotation
1	1	Capture position during either rotation

255 Opt 0 Regis Ctrl

Configures the registration control on port 0 of the feedback option card.

- Set bit 0 [Arm Request] to arm the registration logic for the next trigger event. The particular latch will be armed and ready to be strobed on the next occurrence of the trigger input.
- Set bit 1 [DisArm Req] to disarm the registration logic for next trigger event.

Options	Reserved	Reserved	Reserved	Reserved	Reserved	Reserved	Reserved	Reserved	Reserved	Reserved	Reserved	Reserved	Reserved	Reserved	Reserved	Reserved	Reserved	Reserved	Reserved	Reserved	Reserved	Reserved	Reserved	Reserved	Reserved	Reserved	Reserved	Reserved	Reserved	Reserved	Disarm Req	Arm Request
Default	0	0	0	0	0	0	0	0	0	0	0	0	0	0	0	0	0	0	0	0	0	0	0	0	0	0	0	0	0	0	0	0
Bit	31	30	29	28	27	26	25	24	23	22	21	20	19	18	17	16	15	14	13	12	11	10	9	8	7	6	5	4	3	2	1	0

0 = False
1 = True

No.	Name Description	Values	Linkable	Read-Write	Data Type

256 **Opt 0 Regis Stat**

Indicates the registration control status on port 0 of the feedback option card.

- Bit 0 [Armed] indicates the registration latch is armed.
- Bit 1 [Found] indicates the registration event has triggered the latch.

Options	Reserved	Reserved	Reserved	Reserved	Reserved	Reserved	Reserved	Reserved	Reserved	Reserved	Reserved	Reserved	Reserved	Reserved	Reserved	Reserved	Reserved	Reserved	Reserved	Reserved	Reserved	Reserved	Reserved	Reserved	Reserved	Reserved	Reserved	Reserved	Reserved	Reserved	Found	Armed
Default	0	0	0	0	0	0	0	0	0	0	0	0	0	0	0	0	0	0	0	0	0	0	0	0	0	0	0	0	0	0	0	0
Bit	31	30	29	28	27	26	25	24	23	22	21	20	19	18	17	16	15	14	13	12	11	10	9	8	7	6	5	4	3	2	1	0

0 = False
1 = True

259 **Hi Res0 Config**

Specifies the configuration options for the Hi-Resolution Encoder Feedback Option.

- Bit 5 [Hi Res Dir] determines the counting direction. If clear, the direction is forward or up. If set, the direction is reverse or down.
- Bits12 [SmplRate bt0] -15 [SmplRate bt3] configure the sample interval for measuring speed (See Table 259: Encoder Sample Interval). Increasing the encoder sample interval improves speed measurement near zero speed. Decreasing allows the speed control regulator to perform with high gains at high speeds.

Options	Reserved	Reserved	Reserved	Reserved	Reserved	Reserved	Reserved	Reserved	Reserved	Reserved	Reserved	Reserved	Reserved	Reserved	Reserved	Reserved	SmplRate bt3	SmplRate bt2	SmplRate bt1	SmplRate bt0	Reserved	Reserved	Reserved	Reserved	Reserved	SW Reset	Hi Res Dir	Reserved	Reserved	Reserved	Reserved	Reserved
Default	0	0	0	0	0	0	0	0	0	1	0	0	0	0	0	0	0	0	0	0	0	0	0	0	0	0	0	0	0	0	0	0
Bit	31	30	29	28	27	26	25	24	23	22	21	20	19	18	17	16	15	14	13	12	11	10	9	8	7	6	5	4	3	2	1	0

0 = False
1 = True

Table 259: Encoder Sample Interval

Bit	15	14	13	12	Encoder Sample Interval Settings
	0	0	0	0	0.5 ms
	0	0	0	1	0.5 ms (min. setting)
	0	0	1	0	1.0 ms
	0	0	1	1	1.5 ms
	0	1	0	0	2.0 ms (default setting)
	0	1	0	1	2.5 ms
	0	1	1	0	3.0 ms
	0	1	1	1	3.5 ms
	1	0	0	0	4.0 ms
	1	0	0	1	4.5 ms
	1	0	1	0	5.0 ms
	1	0	1	1	5.5 ms
	1	1	0	0	6.0 ms (max. setting)
	1	1	0	1	6.0 ms
	1	1	1	0	6.0 ms
	1	1	1	1	6.0 ms

260 **Hi Res0 Status**

Indicates faults on the Hi-Resolution Encoder Feedback Option.

- Bit 8 [Open Wire] indicates an open wire fault. The feedback option card checks for a pre-determined constant value. If this value is not within tolerances, an open wire fault is declared. A quadrature check is also done. If an error occurs during the check, the open wire check is aborted. If 3 quadrature errors occur in succession, the open wire check will complete and the constant value checked again. If this value is not within tolerances, the fault is declared.
- Bit 9 [Power Fail] indicates the failure of the power supply.
- Bit 10 [Diag Fail] indicates the option board failed its power-up diagnostic test. The pattern on the FPGA must be identical to the pattern written from the DSP, or the board status test will fail.
- Bit 11 [Msg Checksum] indicates a message checksum fault. The check sum associated with the Heidanhain encoder must be correct and acknowledged by the feedback option card.
- Bit 12 [Time Out Err] indicates a RS-485 time-out fault. This check requires information to be sent from the encoder to the feedback option card within a specified time. Typical times are about 10 clock cycles before and error is detected. This check is done only at power-up.

Options	Reserved	Reserved	Reserved	Reserved	Reserved	Reserved	Reserved	Reserved	Reserved	Reserved	Reserved	Reserved	Reserved	Reserved	Reserved	Reserved	Reserved	Reserved	Reserved	Time Out Err	Msg Checksum	Diag Fail	Power Fail	Open Wire	Reserved	Reserved	Reserved	Reserved	Reserved	Reserved	Reserved	Reserved
Default	0	0	0	0	0	0	0	0	0	0	0	0	0	0	0	0	0	0	0	0	0	0	0	0	0	0	0	0	0	0	0	0
Bit	31	30	29	28	27	26	25	24	23	22	21	20	19	18	17	16	15	14	13	12	11	10	9	8	7	6	5	4	3	2	1	0

0 = False
1 = True

No.	Name Description	Values	Linkable	Read-Write	Data Type
261	**Hi Res0 TP Sel** Selects data displayed by Par 262 [Hi Res0 TP Data]. • H0 Edge Time - Latency counter value, not used for Hi-Resolution Feedback Option. • H0 dEdge - Change in edge counts for one 500 microsecond update. At constant speed, this value should be constant. • H0 dTime - Change in update time. This value should be constant, 500 microseconds. • H0 EPR - This value should be 1,048,576 counts per revolution - this is a constant value. • H0 dTheta - This is a scaled value of option 2. • Ho Delta2Err - Derivative of option 2.	Default: 0 "Zero" Options: 0 "Zero" 1 "H0 Edge Time" 2 "H0 dEdge" 3 "H0 dTime" 4 "H0 EPR" 5 "H0 Edge Mode" 6 "H0 dTheta" 7 "H0 Delta2Err"			
262	**Hi Res0 TP Data** Displays data selected by Par 261 [Hi Res0 TP Sel].	Default: 0 Min/Max: -/+32768			16-bit Integer
266	**Reslvr0 Config** Configures options for the resolver option card at port 0. • Setting bit 0 [Cable Tune] enables the cable tuning test, resetting the bit to zero disables the test. • Bits 2 [Resolution 0] and 3 [Resolution 1] select the feedback resolution (see Table 266A: Resolution Settings). This determines the number of significant bits that are calculated in the value of parameter 250 [FB Opt0 Posit]. It does not affect the number of counts created per resolver revolution (see Table 266B: Resolution Setting and Least Significant Bits Used). Also, the resolution sets a limit on the maximum tracking speed (see Table 266C: Resolution and Resolver Tracking Speed). • Setting bit 4 [Energize] energizes the resolver, resetting the bit to zero de-energizes the resolver. • Bit 5 [Resolver Dir] determines the counting direction. If clear, the direction is forward or up. If set, the direction is reverse or down. • Bit 9 [Edge Time] configures the method of sampling used by the Velocity Position Loop (VPL). Setting the bit chooses "Edge to Edge" sampling, while resetting the bit to zero chooses "Simple Difference" sampling. "Simple Difference" sampling calculates speed by examining the difference between pulse counts over a fixed sample time. "Edge to Edge" sampling adjusts the sample time to synchronize with the position count updates from the daughter card - improving the accuracy of the speed calculation. • Bits 12 [SmplRate bt0] through 15 [SmplRate bt3] configure the sample interval for measuring speed (See Table 266D: Encoder Sample Interval). Increasing the encoder sample interval improves speed measurement near zero speed. Decreasing allows the speed control regulator to perform with high gains at high speeds.				

Options	Reserved	Reserved	Reserved	Reserved	Reserved	Reserved	Reserved	Reserved	Reserved	Reserved	Reserved	Reserved	Reserved	Reserved	Reserved	Reserved	SmplRate bt3	SmplRate bt2	SmplRate bt1	SmplRate bt0	Reserved	Reserved	Edge Time	Reserved	Reserved	Reserved	Resolver Dir	Energize	Resolution 1	Resolution 0	Reserved	Cable Tune
Default	0	0	0	0	0	0	0	0	0	0	0	0	0	0	0	1	0	1	0	0	0	0	1	0	0	0	0	1	0	1	0	0
Bit	31	30	29	28	27	26	25	24	23	22	21	20	19	18	17	16	15	14	13	12	11	10	9	8	7	6	5	4	3	2	1	0

0 = False
1 = True

Table 266A: Resolution Settings

Bit 3	2	Resolution
0	0	10 bit resolution
0	1	12 bit resolution (default setting)
1	0	14 bit resolution
1	1	16 bit resolution

Table 266B: Resolution Setting and Least Significant Bits Used

Resolution	LSB Not Used	Parameter 250 Increments by
10 bit	All bits used	1
12 bit	2 LSB not used	4
14 bit	4 LSB not used	8
16 bit	6 LSB not used	16

Table 266C: Resolution and Resolver Tracking Speed

Resolution	Tracking Speed for X1 Resolver	Tracking Speed for X2 Resolver	Tracking Speed for X5 Resolver
10 bit	55 K-rpm	27.5 K-rpm	11 K-rpm
12 bit	13.8 K-rpm	6.9 K-rpm	2.76 K-rpm
14 bit	3480 rpm	1740 rpm	696 rpm
16 bit	900 rpm	450 rpm	180 rpm

Table 266D: Encoder Sample Interval

Bit 15	14	13	12	Encoder Sample Interval Settings
0	0	0	0	0.5 ms
0	0	0	1	0.5 ms (min. setting)
0	0	1	0	1.0 ms
0	0	1	1	1.5 ms
0	1	0	0	2.0 ms (default setting)
0	1	0	1	2.5 ms
0	1	1	0	3.0 ms
0	1	1	1	3.5 ms
1	0	0	0	4.0 ms
1	0	0	1	4.5 ms
1	0	1	0	5.0 ms
1	0	1	1	5.5 ms
1	1	0	0	6.0 ms (max. setting)
1	1	0	1	6.0 ms
1	1	1	0	6.0 ms
1	1	1	1	6.0 ms

No.	Name Description	Values	Linkable	Read-Write	Data Type
267	**Reslvr0 Status** Indicates the status of the resolver option card port 0. • Bit 0 [-Cable Tune] indicates that the cable tuning test is active. • Bit 1 [-Tune Result] indicates the tuning parameter type. When set, it indicates the tuning is using the parameter database. When cleared, it indicates the tuning is using derived data. • Bit 2 [-Mtr Turning] indicates that the motor is turning. • Bit 4 [Energized] indicates the resolver is energized. • Bit 8 [Open Wire] indicates a problem with the cable (open circuit). • Bit 9 [Power Supply] indicates a problem with the option card's power supply. • Bit 10 [Diag Fail] indicates the option card has failed its power-up diagnostics. Options: Reserved, Reserved, Reserved, Reserved, Select OK, Diag Fail, Power Supply, Open Wire, Reserved, Reserved, Reserved, Energized, -Cable Comp, -Mtr Turning, -Tune Result, -Cable Tune Default: 0 0 0 0 1 1 1 1 1 1 1 1 1 1 1 1 Bit: 15 14 13 12 11 10 9 8 7 6 5 4 3 2 1 0 0 = False 1 = True				
268	**Reslvr0 TP Sel** Enter or write a value to select Fault data displayed in Par 269 [Reslvr0 TP Data].	Default: 0 "Zero" Options: 0 "Zero"; 1 "R0 Edge Time"; 2 "R0 dEdge"; 3 "R0 dTime"; 4 "R0 EPR"; 5 "R0 Edge Mode"; 6 "R0 dTheta"; 7 "R0 Delta2Err"			
269	**Reslvr0 TP Data** Displays the data selected by Par 268 [Reslvr0 TP Sel].	Default: 0 Min/Max: -/+2147483648			32-bit Integer
270	**Reslvr0 SpdRatio** Specifies the speed ratio for the resolver option card port 0. The speed ratio comes from the following formula. Speed ratio = electrical revolutions / mechanical revolutions = pole count / 2.	Default: 1 2 poles (x1) Options: 1 2 Poles (x1); 2 4 Poles (x2); 3 6 Poles (x3); 4 8 Poles (x4); 5 10 Poles(x5)			
271	**Reslvr0 Carrier** Specifies the resolver carrier frequency for the resolver option card port 0.	Units: Hz Default: 0 Min/Max: 0/10000			32-bit Integer
272	**Reslvr0 In Volts** Specifies the resolver input voltage for the resolver option card port 0.	Units: Volt Default: 0.0000 Min/Max: 0.0000/31.0810			Floating Point
273	**Rslvr0 XfrmRatio** Specifies the resolver transform ratio for the resolver option card port 0.	Default: 0.0000 Min/Max: 0.0000/4.0950			Floating Point
274	**Reslvr0 CableBal** Specifies the resolver cable balance for the resolver option card port 0.	Default: 0.0000 Min/Max: 0.0000/255.0000			Floating Point
275	**Reslvr0 Type Sel** Specifies the type of resolver used.	Default: 0 "Disabled" Options: 0 "Disabled"; 1 "T2014/2087x1"; 2 "T2014/2087x2"; 3 "T2014/2087x5"; 4 "MPL 460v"; 5 "Reserved"; 6 "Siemens 1FT6"; 7 "PrkrHn ZX600"; 8 "Reserved"; 9 "1326Ax 460v"; 10 "Reserved"; 11 "Reserved"; 12 "Reserved"; 13 "Reserved"; 14 "AmciR11XC107"			
276	**FB Opt1 Posit** Displays the position feedback (accumulator) from port 1 of the feedback option card.	Default: 0 Min/Max: -/+2147483648			32-bit Integer
277	**FB Opt1 Spd Fdbk** Displays the speed feedback from port 1 of the feedback option card.	Units: RPM Default: 0.0000 Min/Max: -/+14000.0000 Comm Scale: Par 4 [Motor NP RPM] = 1.0			Floating Point
279	**Opt 1 Regis Ltch** Displays registration data from port 1 of the feedback option card. This data is the value of the position reference counter, latched by the external strobes. The strobe signal used to trigger the latch is configurable by Par 280 [Opt 1 Regis Cnfg].	Default: 0 Min/Max: -/+2147483648			32-bit Integer

No.	Name Description	Values	Linkable	Read-Write	Data Type

280 **Opt 1 Regis Cnfg**

Configures the registration latch on the feedback option card.

- Bits 3 [RL Trig Edg0] and 4 [RL Trig Edg1] select which edges signal the position (see Table 280A: Edge Selection Settings).
- Bits 5 [RL Dir Rev] and 6 [RL Dir Fwd] set the direction of position capture (see Table 280B: Direction Settings).

Options	Reserved	Reserved	Reserved	Reserved	Reserved	Reserved	Reserved	Reserved	Reserved	Reserved	Reserved	Reserved	Reserved	Reserved	Reserved	Reserved	Reserved	Reserved	Reserved	Reserved	Reserved	Reserved	Reserved	Reserved	Reserved	RL Dir Fwd	RL Dir Rev	RL Trig Edg1	RL Trig Edg0	Reserved	Reserved	Reserved
Default	0	0	0	0	0	0	0	0	0	0	0	0	0	0	0	0	0	0	0	0	0	0	0	0	0	1	1	0	0	0	0	0
Bit	31	30	29	28	27	26	25	24	23	22	21	20	19	18	17	16	15	14	13	12	11	10	9	8	7	6	5	4	3	2	1	0

0 = False
1 = True

Table 280A: Edge Selection Settings

Bit	4	3	
	0	0	Capture position on rising edge
	0	1	Capture position on falling edge
	1	0	Capture position on both edges
	1	1	Disable capture

Table 280B: Direction Settings

Bit	6	5	
	0	0	Disable capture
	0	1	Capture position during Reverse rotation
	1	0	Capture position during Forward rotation
	1	1	Capture position during either rotation

281 **Opt 1 Regis Ctrl**

Configures the registration control for port 1 on the feedback option card.

- Set bit 0 [Arm Request] to arm the registration logic for the next trigger event. The particular latch will be armed and ready to be strobed on the next occurrence of the trigger input.
- Set bit 1 [DisArm Req] to disarm the registration logic for next trigger event.

Options	Reserved	Reserved	Reserved	Reserved	Reserved	Reserved	Reserved	Reserved	Reserved	Reserved	Reserved	Reserved	Reserved	Reserved	Reserved	Reserved	Reserved	Reserved	Reserved	Reserved	Reserved	Reserved	Reserved	Reserved	Reserved	Reserved	Reserved	Reserved	Reserved	Reserved	Disarm Req	Arm Request
Default	0	0	0	0	0	0	0	0	0	0	0	0	0	0	0	0	0	0	0	0	0	0	0	0	0	0	0	0	0	0	0	0
Bit	31	30	29	28	27	26	25	24	23	22	21	20	19	18	17	16	15	14	13	12	11	10	9	8	7	6	5	4	3	2	1	0

0 = False
1 = True

282 **Opt 1 Regis Stat**

Displays the registration control status of port 1 on the feedback option card.

- Bit 0 [Armed] indicates the when the registration latch has been armed.
- Bit 1 [Found] indicates that the registration event has triggered the latch.

Options	Reserved	Reserved	Reserved	Reserved	Reserved	Reserved	Reserved	Reserved	Reserved	Reserved	Reserved	Reserved	Reserved	Reserved	Reserved	Reserved	Reserved	Reserved	Reserved	Reserved	Reserved	Reserved	Reserved	Reserved	Reserved	Reserved	Reserved	Reserved	Reserved	Reserved	Found	Armed
Default	0	0	0	0	0	0	0	0	0	0	0	0	0	0	0	0	0	0	0	0	0	0	0	0	0	0	0	0	0	0	0	0
Bit	31	30	29	28	27	26	25	24	23	22	21	20	19	18	17	16	15	14	13	12	11	10	9	8	7	6	5	4	3	2	1	0

0 = False
1 = True

286 **Linear1 Status**

Indicates faults on the Multi Device Interface (MDI).

- Bit 8 [Open Wire] indicates an open wire fault.

Options	Reserved	Reserved	Reserved	Reserved	Reserved	Reserved	Reserved	Reserved	Reserved	Reserved	Reserved	Reserved	Reserved	Reserved	Reserved	Reserved	Reserved	Reserved	Reserved	Reserved	Reserved	Reserved	Reserved	Open Wire	Reserved	Reserved	Reserved	Reserved	Reserved	Reserved	Reserved	Reserved
Default	0	0	0	0	0	0	0	0	0	0	0	0	0	0	0	0	0	0	0	0	0	0	0	0	0	0	0	0	0	0	0	0
Bit	31	30	29	28	27	26	25	24	23	22	21	20	19	18	17	16	15	14	13	12	11	10	9	8	7	6	5	4	3	2	1	0

0 = False
1 = True

287 **Linear1 TP Sel**

Enter or write a value to select Linear Feedback data displayed in Par 288 [Linear1 TP Data].

- 0 “Zero” - Displays a value of zero.
- 1 “L1 Edge Time” - Displays the latency or edge time (the time since the last update of Par 276 [FB Opt1 Posit]).
- 2 “L1 dEdge” - Displays the change in Par 276 [FB Opt1 Posit] since the last feedback sample.
- 3 “L1 DTime” - Displays the change in time since the last feedback sample. Note: the sample rate is 10,000 counts per second (10 Mhz).
- 4 “L1 EPR” - Displays the change in edges per motor revolution. This number is the same value in Par 290 [Linear1 CPR].
- 6 “L1 dTheta” - Displays the numerator term for speed calculation. This number divided by change in time (3 “L1 DTime”) is the calculated per unit speed for the linear feedback sensor.

Default:	0	“Zero”		
Options:	0	“Zero”	4	“L1 EPR”
	1	“L1 Edge Time”	5	“L1 Edge Mode”
	2	“L1 dEdge”	6	“L1 dTheta”
	3	“L1 dTime”	7	“L1 Delta2Err”

288 **Linear1 TP Data**

Displays the data selected by Par 287 [Linear1 TP Sel].

Default:	0				16-bit
Min/Max:	-/+32768				Integer

No.	Name Description	Values	Linkable	Read-Write	Data Type
289	**Lin1 Update Rate** Sets the sample rate for the linear channel on the Multi Device Interface (MDI) feedback option.	Default: 2 "1.0 msec" Options: 1 "0.5 msec" 3 "1.5 msec" 2 "1.0 msec" 4 "2.0 msec"			
290	**Linear1 CPR** Specifies the change in Par 276 [FB Opt1 Posit] for one revolution of the motor shaft. This value is used to scale the calculated speed, based on the change in feedback position. Units are count per motor revolution (CPR).	Units: CPR Default: 1000 Min/Max: 10/100000		✓	32-bit Integer
297	**Output Curr Disp** Displays measured RMS motor current with a resolution of 1/10 amperes.	Units: Amps Default: 0.0 Min/Max: 0.0/9999.9 Comm Scale: x 10			32-bit Integer
298	**Elapsed Run Time** Displays the total time that the drive has been running (inverter power devices active) with a resolution of 1/10 hour. This parameter is saved in power EE non-volatile memory.	Units: Hrs Default: 0.0 Min/Max: 0.0/429496736.0 Comm Scale: x 10		✓	32-bit Integer
299	**Elapsed MWHrs** Displays the total energy the drive has consumed or produced. Calculated from the absolute magnitude of the product of motor speed and motor torque (power), accumulated over time. This value will increase in both regen and motoring modes of operation.	Units: MWHrs Default: 0.0 Min/Max: 0.0/429496736.0 Comm Scale: x 10		✓	32-bit Integer
300	**Motor Spd Fdbk** Displays measured motor speed information from the selected feedback device.	Units: RPM Default: 0.0000 Min/Max: -/+14112.0000 Comm Scale: Par 4 [Motor NP RPM] = 1.0			Real
301	**Motor Speed Ref** Displays the speed reference value, after the limit function. This is the input to the error calculator and speed regulator.	Units: RPM Default: 0.0000 Min/Max: -/+14112.0000 Comm Scale: Par 4 [Motor NP RPM] = 1.0			Real
302	**Spd Reg PI Out** Displays the output of the speed regulator. This is the input to torque control. A value of 1.0 represents base torque of the motor.	Units: P.U. Default: 0.0000 Min/Max: -/+8.0000			Real
303	**Motor Torque Ref** Displays the reference value of motor torque. The actual value of the motor torque is within 5% of this value.	Units: P.U. Default: 0.0000 Min/Max: -/+8.0000			Real

No.	Name Description	Values	Linkable	Read-Write	Data Type
304	**Limit Status** Displays the limit status of conditions that may be limiting the current reference or torque reference. • Bit 0 [+MCS Iq Lim] indicates that torque producing current is at its positive limit. • Bit 1 [+MCS Ws Lim] indicates that flux producing torque is at its positive limit. • Bit 2 [0 Ia from +] indicates that torque producing current is limited to zero from the positive direction - refer to Par 353 [Iq Actual Lim]. • Bit 3 [+Iq Calc] indicates the calculation for torque producing current has reached its positive limit. • Bit 4 [+Current Lim] indicates that the current reference has reached the positive Motor Current Limit set by Par 356 [Mtr Current Lim]. • Bit 5 [+DriveProtOL] indicates that the current reference has reached the positive current limit set by the Open Loop Inverter Overload, shown in Par 343 [OL OpnLp CurrLim]. • Bit 6 [+DriveProtCL] indicates that the current reference has reached the positive current limit set by the Closed Loop Inverter Overload, shown in Par 344 [OL ClsLp CurrLim]. • Bit 8 [+Torq Limit] indicates that the torque reference has reached the Positive Torque Limit set by Par 125 [Torque Pos Limit]. • Bit 9 [Mtrng PwrLim] indicates that the torque reference is being limited by the Motoring Power Limit set by Par 127 [Mtring Power Lim]. • Bit 10 [+Torq CurLim] indicates that current reference has reached the Actual Torque Producing Current Limit set by Par 353 [Iq Actual Lim]. • Bit 11 [Atune Tq Lim] indicates that the torque reference is being limited by Par 129 [Atune Torq Ref]. • Bit 12 [+0 Torq Ena] indicates that the torque reference is limited to zero because Par 157 [Logic Ctrl State] bit 9 [Torq Ref En] is off. • Bit 13 [+0 Curr Ena] indicates that the current reference is limited to zero because Par 157 [Logic Ctrl State] bit 11 [CurrRef En] is off. • Bit 16 [-MCS Iq Lim] indicates that torque producing current is at its negative limit. • Bit 17 [-MCS Ws Lim] indicates that flux producing torque is at its negative limit. • Bit 18 [0 Iq from -] indicates that torque producing current is limited to zero from the negative direction - refer to Par 353 [Iq Actual Lim].1 • Bit 19 [-Iq Calc] indicates the calculation for torque producing current has reached its negative limit. • Bit 20 [-Current Lim] indicates that the current reference has reached the negative Motor Current Limit set by Par 356 [Mtr Current Lim]. • Bit 21 [-DriveProtOL] indicates that the current reference has reached the negative current limit set by the Open Loop Inverter Overload, shown in Par 343 [OL OpnLp CurrLim]. • Bit 22 [-DriveProtCL] indicates that the current reference has reached the negative current limit set by the Closed Loop Inverter Overload, shown in Par 344 [OL ClsLp CurrLim]. • Bit 24 [-Torq Limit] indicates that the torque reference has reached the Negative Torque Limit set by Par 126 [Torque Neg Limit]. • Bit 25 [Regen PwrLim] indicates that the torque reference is being limited by the Regenerative Power Limit set by Par 128 [Regen Power Lim]. • Bit 26 [-Torq CurLim] indicates that current reference has reached the Actual Torque Producing Current Limit set by Par 353 [Iq Actual Lim]. • Bit 27 [Bus Reg Tq Lim] indicates the bus voltage regulator is active and limiting the regenerative torque. • Bit 28 [-0 Torq Ena] indicates that the torque reference is limited to zero because Par 157 [Logic Ctrl State] bit 9 [Torq Ref En] is off. • Bit 29 [-0 Curr Ena] indicates that the current reference is limited to zero because Par 157 [Logic Ctrl State] bit 11 [CurrRef En] is off.				

Options	Reserved	Reserved	-0 Curr Ena	-0 Torq Ena	Bus Reg Lim	-Torq CurLim	Regen PwrLim	-Torq Lim	-SpdReg Open	-DriveProtCL	-DriveProtOL	-Current Lim	-Iq Calc	0 Iq from -	-MCS Ws Lim	-MCS Iq Lim	Reserved	Reserved	+0 Curr Ena	+0 Torq Ena	Atune Tq Lim	+Torq CurLim	Mtrng PwrLim	+Torq Limit	+SpdReg Open	+DriveProtCL	+DriveProtOL	+Current Lim	+Iq Calc	0 Iq from +	+MCS Ws Lim	+MCS Iq Lim	
Default	0	0	0	0	0	0	0	0	0	0	0	0	0	0	0	0	0	0	0	0	0	0	0	0	0	0	0	0	0	0	0	0	0 = False
Bit	31	30	29	28	27	26	25	24	23	22	21	20	19	18	17	16	15	14	13	12	11	10	9	8	7	6	5	4	3	2	1	0	1 = True

No.	Name Description	Values	Linkable	Read-Write	Data Type
305	**Mtr TorqCurr Ref** Displays the torque current reference present at the output of the current rate limiter. 100% is equal to 1 per unit (pu) rated motor torque.	Units: P.U. Default: 0.0000 Min/Max: -/+8.0000			Real
306	**DC Bus Voltage** Displays measured bus voltage.	Units: Volt Default: 0.0000 Min/Max: 0.0000/1000.0000			Real
307	**Output Voltage** Displays RMS line-to-line fundamental motor voltage. This data is averaged and updated every 50 milliseconds.	Units: Volt Default: 0.00 Min/Max: 0.00/3000.00			Real
308	**Output Current** Displays measured RMS motor current.	Units: Amps Default: 0.00 Min/Max: 0.00/10000.00			Real
309	**% Motor Flux** Displays the motor flux in % of nominal.	Units: % Default: 100.0 Min/Max: 0.0/100.0 Comm Scale: 100 = 4096			16-bit Integer
310	**Output Freq** Displays the motor stator frequency.	Units: Hz Default: 0.00 Min/Max: -/+250.00			Real
311	**Output Power** Motor Power is the calculated product of the torque reference and motor speed feedback. A 125mS filter is applied to this result. Positive values indicate motoring power; negative values indicate regenerative power.	Units: Hp Default: 0.00 Min/Max: -/+9999.00			Real
312	**MotorFluxCurr FB** Displays the measured per unit motor flux producing current.	Units: P.U. Default: 0.0000 Min/Max:: 0.0000/1.0000			Real

No.	Name Description	Values	Linkable	Read-Write	Data Type
313	**Heatsink Temp** Displays the measured temperature of the drive's heatsink.	Units: degC Default: 0.0000 Min/Max: -30.0000/200.0000			Real
314	**VPL Firmware Rev** Displays the major and minor revision levels of the drive's Velocity Position Loop (VPL) software.	Default: 1.16 Min/Max: 0.01/99.99 Comm Scale: x 100			16-bit Integer
315	**VPL Build Number** Displays the build number of the drive's Velocity Position Loop (VPL) software.	Default: 2 Min/Max: 1/10000			16-bit Integer

316 SynchLink Status

Indicates status of SynchLink functions.

- Bit 0 [FB Opt Prsnt] indicates the presence of an optional feedback daughter card.
- Bit 1 [Encdr0 Prsnt] indicates the presence of Encoder 0.
- Bit 2 [Encdr1 Prsnt] indicates the presence of Encoder 1.
- Bit 3 [In Sync] indicates SynchLink communications is synchronized.
- Bit 4 [Tx Active] indicates TX frames are being transmitted downstream from this node.
- Bit 5 [Rx Active] indicates RX frames are being received from nodes upstream.
- Bit 15 [Rx Data Enbl] indicates received data is being updated.

Options	Reserved	Reserved	Reserved	Reserved	Reserved	Reserved	Reserved	Reserved	Reserved	Reserved	Reserved	Reserved	Reserved	Reserved	Reserved	Reserved	Rx Data Enbl	Reset Req'd	Reserved	Reserved	Reserved	Reserved	Reserved	Reserved	Reserved	Reserved	Rx Active	Tx Active	In Sync	Encdr1 Prsnt	Encdr0 Prsnt	FB Opt Prsnt
Default	0	0	0	0	0	0	0	0	0	0	0	0	0	0	0	0	0	0	0	0	0	0	0	0	0	0	0	0	0	0	0	0
Bit	31	30	29	28	27	26	25	24	23	22	21	20	19	18	17	16	15	14	13	12	11	10	9	8	7	6	5	4	3	2	1	0

0 = False
1 = True

317	**SL System Time** Displays the SynchLink system time counter.	Units: µSec Default: 0 Min/Max: 0/1048575			32-bit Integer
318	**Posit Spd Output** Final output of the position regulator.	Units: RPM Default: 0.0000 Min/Max: -/+14112.0000 Comm Scale: Par 4 [Motor NP RPM] = 1.0			Real

320 Exception Event1

Indicates the presence of certain drive anomalies. Configure the drive's response to these events by entering values in the parameters of the Fault/Alarm Configuration group of the Utility file.

Options	PWM Asynchro	Precharge Er	MC Firmware	PWM Short	VPL/MC Comm	OverCurrent	Ground Fault	Trans Desat	Bus OverVolt	MC Commissn	Over Freq	Inertia Test	DSP Error	DSP Mem Err	Ext Fault In	Inv OL Trip	Inv OL Pend	Inv OTmpTrip	Inv OTmpPend	Motor Stall	Mtr OL Pend	Mtr OL Trip	Power Loss	SLink Comm	SLink HW	Ctrl EE Mem	FB Opt1 Loss	FB Opt0 Loss	Encdr1 Loss	Encdr0 Loss	SpdRef Decel	Abs OverSpd
Default	0	0	0	0	0	0	0	0	0	0	0	0	0	0	0	0	0	0	0	0	0	0	0	0	0	0	0	0	0	0	0	0
Bit	31	30	29	28	27	26	25	24	23	22	21	20	19	18	17	16	15	14	13	12	11	10	9	8	7	6	5	4	3	2	1	0

0 = False
1 = True

321 Exception Event2

Indicates the presence of certain drive anomalies. Configure the drive's response to these events by entering values in the parameters of the Fault/Alarm Configuration group of the Utility file.

Options	Lgx LinkChng	Lgx Closed	Lgx Timeout	Lgx OutOfRun	NetLoss DPI6	NetLoss DPI5	NetLoss DPI4	NetLoss DPI3	NetLoss DPI2	NetLoss DPI1	DPI Loss P6	DPI Loss P5	DPI Loss P4	DPI Loss P3	DPI Loss P2	DPI Loss P1	No Ctrl Devc	Reserved	Interp Synch	Reserved	NonCnfgAlarm	VoltFdbkLoss	BusUnderVolt	RidethruTime	Slink Mult	PowerEE Cksm	BrakeOL Trip	PSC Sys Flt2	PSC Sys Flt1	Ctrl EE Cksm	MC Command	+/- 12v Pwr
Default	0	0	0	0	0	0	0	0	0	0	0	0	0	0	0	0	0	0	0	0	0	0	0	0	0	0	0	0	0	0	0	0
Bit	31	30	29	28	27	26	25	24	23	22	21	20	19	18	17	16	15	14	13	12	11	10	9	8	7	6	5	4	3	2	1	0

0 = False
1 = True

322 Exception Event3

Indicates the presence of certain drive anomalies. Configure the drive's response to these events by entering values in the parameters of the Fault/Alarm Configuration group of the Utility file.

Options	Reserved	Reserved	Reserved	Reserved	Reserved	Reserved	Reserved	Reserved	Reserved	Reserved	Reserved	Posit Err	-Hrd OvrTrvl	+Hrd OvrTrvl	-Sft OvrTrvl	+Sft OvrTrvl	Reserved	Reserved	Reserved	Reserved	Reserved	HH PwrBdTemp	HH PwrEE Er	HHPrChrgCntc	HH PwrBd Prc	HH Drv Ovrld	HH FanFdbkLs	HH BusWtchDg	HH BusCRC Er	HH BusLinkLs	HH BusComDly	HH InPhaseLs
Default	0	0	0	0	0	0	0	0	0	0	0	0	0	0	0	0	0	0	0	0	0	0	0	0	0	0	0	0	0	0	0	0
Bit	31	30	29	28	27	26	25	24	23	22	21	20	19	18	17	16	15	14	13	12	11	10	9	8	7	6	5	4	3	2	1	0

0 = False
1 = True

No.	Name Description	Values	Linkable	Read-Write	Data Type

323 Fault Status 1

Indicates the occurrence of exception events that have been configured as fault conditions. These events are from Par 320 [Exception Event1]

Options	PWM Asynchro	Precharge Er	MC Firmware	PWM Short	VPL/MC Comm	OverCurrent	Ground Fault	Trans Desat	Bus OverVolt	MC Commissn	Over Freq	Inertia Test	DSP Error	DSP Mem Err	Ext Fault In	Inv OL Trip	Inv OL Pend	Inv OTmpTrip	Inv OTmpPend	Motor Stall	Mtr OL Pend	Mtr OL Trip	Power Loss	SLink Comm	SLink HW	Ctrl EE Mem	FB Opt1 Loss	FB Opt0 Loss	Encdr1 Loss	Encdr0 Loss	SpdRef Decel	Abs OverSpd
Default	0	0	0	0	0	0	0	0	0	0	0	0	0	0	0	0	0	0	0	0	0	0	0	0	0	0	0	0	0	0	0	0
Bit	31	30	29	28	27	26	25	24	23	22	21	20	19	18	17	16	15	14	13	12	11	10	9	8	7	6	5	4	3	2	1	0

0 = False
1 = True

324 Fault Status 2

Indicates the occurrence of exception events that have been configured as fault conditions. These events are from Par 321 [Exception Event2].

Options	Lgx LinkChng	Lgx Closed	Lgx Timeout	Lgx OutOfRun	NetLoss DPI6	NetLoss DPI5	NetLoss DPI4	NetLoss DPI3	NetLoss DPI2	NetLoss DPI1	DPI Loss P6	DPI Loss P5	DPI Loss P4	DPI Loss P3	DPI Loss P2	DPI Loss P1	No Ctrl Devc	Reserved	Interp Synch	Reserved	NonCnfgAlarm	VoltFdbkLoss	BusUnderVolt	RidethruTime	Slink Mult	PowerEE Cksm	BrakeOL Trip	PSC Sys Flt2	PSC Sys Flt1	Ctrl EE Cksm	MC Command	+/- 12v Pwr
Default	0	0	0	0	0	0	0	0	0	0	0	0	0	0	0	0	0	0	0	0	0	0	0	0	0	0	0	0	0	0	0	0
Bit	31	30	29	28	27	26	25	24	23	22	21	20	19	18	17	16	15	14	13	12	11	10	9	8	7	6	5	4	3	2	1	0

0 = False
1 = True

325 Fault Status 3

Indicates the occurrence of exception events that have been configured as fault conditions.

Options	Reserved	Reserved	Reserved	Reserved	Reserved	Reserved	Reserved	Reserved	Reserved	Reserved	Reserved	Posit Err	-Hrd OvrTrvl	+Hrd OvrTrvl	-Sft OvrTrvl	+Sft OvrTrvl	Reserved	Reserved	Reserved	Reserved	Reserved	HH PwrBdTemp	HH PwrEE Er	HHPrChrgCntc	HH PwrBd Prc	HH Drv Ovrld	HH FanFdbkLs	HH BusWtchDg	HH BusCRC Er	HH BusLinkLs	HH BusComDly	HH InPhaseLs
Default	0	0	0	0	0	0	0	0	0	0	0	0	0	0	0	0	0	0	0	0	0	0	0	0	0	0	0	0	0	0	0	0
Bit	31	30	29	28	27	26	25	24	23	22	21	20	19	18	17	16	15	14	13	12	11	10	9	8	7	6	5	4	3	2	1	0

0 = False
1 = True

326 Alarm Status 1

Indicates the occurrence of exception events that have been configured as alarm conditions. These events are from Par 320 [Exception Event1].

Options	PWM Asynchro	Precharge Er	MC Firmware	PWM Short	VPL/MC Comm	OverCurrent	Ground Fault	Trans Desat	Bus OverVolt	MC Commissn	Over Freq	Inertia Test	DSP Error	DSP Mem Err	Ext Fault In	Inv OL Trip	Inv OL Pend	Inv OTmpTrip	Inv OTmpPend	Motor Stall	Mtr OL Pend	Mtr OL Trip	Power Loss	SLink Comm	SLink HW	Ctrl EE Mem	FB Opt1 Loss	FB Opt0 Loss	Encdr1 Loss	Encdr0 Loss	SpdRef Decel	Abs OverSpd
Default	0	0	0	0	0	0	0	0	0	0	0	0	0	0	0	0	0	0	0	0	0	0	0	0	0	0	0	0	0	0	0	0
Bit	31	30	29	28	27	26	25	24	23	22	21	20	19	18	17	16	15	14	13	12	11	10	9	8	7	6	5	4	3	2	1	0

0 = False
1 = True

327 Alarm Status 2

Indicates the occurrence of exception events that have been configured as alarm conditions. These events are from Par 321 [Exception Event2].

Options	Lgx LinkChng	Lgx Closed	Lgx Timeout	Lgx OutOfRun	NetLoss DPI6	NetLoss DPI5	NetLoss DPI4	NetLoss DPI3	NetLoss DPI2	NetLoss DPI1	DPI Loss P6	DPI Loss P5	DPI Loss P4	DPI Loss P3	DPI Loss P2	DPI Loss P1	No Ctrl Devc	Reserved	Interp Synch	Reserved	NonCnfgAlarm	VoltFdbkLoss	BusUnderVolt	RidethruTime	Slink Mult	PowerEE Cksm	BrakeOL Trip	PSC Sys Flt2	PSC Sys Flt1	Ctrl EE Cksm	MC Command	+/- 12v Pwr
Default	0	0	0	0	0	0	0	0	0	0	0	0	0	0	0	0	0	0	0	0	0	0	0	0	0	0	0	0	0	0	0	0
Bit	31	30	29	28	27	26	25	24	23	22	21	20	19	18	17	16	15	14	13	12	11	10	9	8	7	6	5	4	3	2	1	0

0 = False
1 = True

328 Alarm Status 3

Indicates the occurrence of exception events that have been configured as alarm conditions.

Options	Reserved	Reserved	Reserved	Reserved	Reserved	Reserved	Reserved	Reserved	Reserved	Reserved	Reserved	Posit Err	-Hrd OvrTrvl	+Hrd OvrTrvl	-Sft OvrTrvl	+Sft OvrTrvl	Reserved	Reserved	Reserved	Reserved	Reserved	HH PwrBdTemp	HH PwrEE Er	HHPrChrgCntc	HH PwrBd Prc	HH Drv Ovrld	HH FanFdbkLs	HH BusWtchDg	HH BusCRC Er	HH BusLinkLs	HH BusComDly	HH InPhaseLs
Default	0	0	0	0	0	0	0	0	0	0	0	0	0	0	0	0	0	0	0	0	0	0	0	0	0	0	0	0	0	0	0	0
Bit	31	30	29	28	27	26	25	24	23	22	21	20	19	18	17	16	15	14	13	12	11	10	9	8	7	6	5	4	3	2	1	0

0 = False
1 = True

No.	Name Description	Values	Linkable	Read-Write	Data Type
329	**Fault TP Sel** Enter or write a value to select Fault data displayed in Par 330 [Fault TP Data].	Default: 0 "Zero" Options: 0 "Zero" 1 "Abs OverSpd" 2 "EE Pwr State" 3 "Inv DataStat" 4 "Run Time Err" 5 "LowBus Thres" 6 "LowBus Detct" 7 "PwrLosBusVlt" 8 "MCPLosBusVlt" 9 "MC Flt Reset" 10 "VPL FltReset" 11 "VPL TaskErr" 12 "Mtr OL Input" 13 "Mtr OL Outpt" 14 "MtrStallTime" 15 "MC Handshake" 16 "VPL Handshak" 17 "MC Diag" 18 "PwrLossState" 19 "12 volt loss" 20 "PwrEE Chksum" 21 "Db Read Cnt1" 22 "Db Read Cnt2" 23 "Db Read Cnt3"			
330	**Fault TP Data** Displays the data selected by Par 329 [Fault TP Sel].	Default: 0 Min/Max: -/+2200000000			Real
331	**Fault Stop Mode** Displays the action taken by the drive during the last fault. When a fault occurs, an action is taken as a result of that fault.	Default: 0 "Ignore" Options: 0 "Ignore" 1 "Alarm" 2 "FltCoastStop" 3 "Flt RampStop" 4 "FltCurLimStop"			
335	**Abs OverSpd Lim** Sets an incremental speed above Par 31 [Fwd Speed Limit] and below Par 30 [Rev Speed Limit] that is allowable before the drive indicates its speed is out of range.	Units: RPM Default: 352.8000 Min/Max: 0.0000/1750.0000 Comm Scale: Par 4 [Motor NP RPM] = 1.0		✓	Real
336	**Service Factor** Sets the minimum level of current that causes a motor overload trip under continuous operation. Current levels below this value will not result in an overload trip. For example, a service factor of 1.15 implies continuous operation up to 115% of nameplate motor current.	Units: P.U. Default: 1.1500 Min/Max: 1.0000/2.0000		✓	Real
337	**Mtr I2T Curr Min** Sets the minimum current threshold for the motor overload (I^2T) function. The value indicates the minimum current at the minimum speed, Par 338 [Mtr I2T Spd Min], and these are the first current/speed breakpoint. From this point the current threshold is linear to the value specified by Par 336 [Service Factor].	Units: P.U. Default: 0.5000 Min Max: 0.0500/2.0000		✓	Real
338	**Mtr I2T Spd Min** Sets the minimum speed for the motor overload (I^2T) function. The value indicates the minimum speed below the minimum current threshold, Par 337 [Mtr I2T Curr Min], and these are the first current/speed breakpoint. From this point the current threshold is linear to the value specified by the motor service factor Par 336 [Service Factor]. For more information, please see Motor Overload on page C-3.	Units: P.U. Default: 1.0000 Min/Max: 0.0500/1.0000		✓	Real
339	**Mtr I2T Calibrat** Sets the current calibration level for the motor overload (I^2T) function. The value indicates the current level that the drive will fault at this current in 60 seconds.	Units: P.U. Default: 2.0000 Min/Max: 1.1000/4.0000		✓	Real
340	**Mtr I2T Trp ThrH** Displays the trip threshold current for the motor overload (I^2T) function. The value depends on the motor speed, and is calculated from the minimum current, Par 337 [Mtr I2T Curr Min], the minimum speed, Par 338 [Mtr I2T Spd Min], and the motor service factor, Par 336 [Service Factor].	Units: P.U. Default: 1.1500 Min/Max: 0.0500/2.0000			Real
343	**OL OpnLp CurrLim** Displays the current limit set by the Open Loop Inverter Overload (OL) function. This function sets this current limit based on stator current feedback and the current ratings of the drive - continuous and short term (three-second rating). Typically the drive will have a sixty-second rating of 110% of continuous current and a three-second rating at 150% of the continuous current. Under normal operating conditions, the open loop function sets this current limit to the short term (three-second) rating. If the function detects an overload, it lowers the limit to the continuous level. After a period of time (typically one to three minutes), the function returns the limit to the short term rating.	Units: P.U. Default: 8.0000 Min/Max: 0.0000/8.0000			Real
344	**OL ClsLp CurrLim** Displays the current limit set by the Closed Loop Inverter Overload (OL) function. This function will set a current limit level based on the values in Par 358 [Iq Ref Limited], Par 313 [Heatsink Temp] and the thermal characteristics of the drive. Under normal operating conditions, the function typically sets the limit at 250% of the continuous drive rating. If the function determines that the power device junction temperature is approaching maximum, it will reduce this limit to the level required to prevent additional heating of the inverter. This level could be as low as the continuous rating of the drive. If the inverter temperature decreases, the function will raise the limit to a higher level. Disable this protection by setting bit 13 [OL ClsLpDsbl] of Par 153 [Control Options].	Units: P.U. Default: 8.0000 Min/Max: 0.0000/8.0000			Real

No.	Name Description	Values	Linkable	Read-Write	Data Type
345	**Drive OL JnctTmp** Displays the calculated junction temperature of the power semiconductors in the inverter. The calculation uses the values of Par 313 [Heatsink Temp], Par 358 [Iq Ref Limited], and inverter thermal characteristics contained in the power EE memory. If this value exceeds the maximum junction temperature (visible in Par 348 [Drive OL TP Data] when Par 347 [Drive OL TP Sel] = 12 "fJunTmprMax"), two faults occur: Inverter Overtemperature Fault (fault code 15), and Junction Overtemperature Fault - indicated by bit 7 [Jnc OverTemp] of Par 346 [Drive OL Status].	Units: degC Default: 0.0000 Min/Max: -50.0000/300.0000			Real

346 Drive OL Status

Indicates the status of various overload (OL) conditions.

- Bit 0 [NTC Shorted] indicates the Negative Temperature Coefficient (NTC) device has a short circuit.
- Bit 1 [NTC Open] indicates the NTC has an open circuit.
- Bit 2 [HS OverTemp] indicates that the heatsink temperature is above 105C for ratings 1.1-11.0A, 115C for 14-34A, or 100C for 40-52A.
- Bit 3 [HS Pending] indicates that the heatsink temperature is above 95C for ratings 1.1 -11A, 105C for 14- 34A, or 90C for 40- 52A.
- Bit 4 [IT Trip] indicates the drive has exceed the 3 second rating of either the 150% normal duty rating or 200% of the heavy duty rating.
- Bit 5 [IT Pending] indicates the drive OL integrator is at 50% of the time out time.
- Bit 6 [IT Foldback] indicates the drive closed loop current limit is in a fold back condition. The value of the fold back is proportional to the calculated junction temperature.
- Bit 7 [Jnc Over Temp] indicates the junction temperature has exceeded the maximum temperature for the power semiconductor device.

Options	Reserved	Reserved	Reserved	Reserved	Reserved	Reserved	Reserved	Reserved	Jnc OverTemp	IT Foldback	IT Pending	IT Trip	HS Pending	HS OverTemp	NTC Open	NTC Shorted
Default	0	0	0	0	0	0	0	0	0	0	0	0	0	0	0	0
Bit	15	14	13	12	11	10	9	8	7	6	5	4	3	2	1	0

0 = False
1 = True

No.	Name Description	Values	Linkable	Read-Write	Data Type
347	**Drive OL TP Sel** Enter or write a value to select the drive overload data displayed in Par 348 [Drive OL TP Data].	Default: 0 "Zero" Options: 0 "Zero" 1 "fAbsIsCurr" 2 "fDelta" 3 "fAbsIqCurr" 4 "fOL_l" 5 "fOL_m" 6 "fOL_k" 7 "fOL_g" 8 "fOL_intg" 9 "fCL_intg" 10 "fInvOLClim" 11 "fJuncDegc" 12 "fJunTmprMax" 13 "f60sPUCur" 14 "f60sAmp" 15 "f3sPUCur" 16 "f3sAmp" 17 "fRatioInvMtr" 18 "fRatioMtrInv" 19 "iConvertStat" 20 "fIgbtThres" 21 "fIgbtSlope" 22 "fIgbtEnergy" 23 "fIgbtJuncase" 24 "fIgbtWatts" 25 "iIgbtPerMod" 26 "fFdThres" 27 "fFdSlope" 28 "fFdJunCase" 29 "fFdWatts" 20 "fMaxHsDegc" 31 "fCsImp" 32 "fCsFltr" 33 "fPwmHz" 34 "fElecHz" 35 "fModIdex" 36 "fBoost" 37 "fTotalWatts" 38 "fHSDegc" 39 "iAdconv" 30 "Jct Temp 700S" 41 "Jct Tmp HiHp" 42 "Jct Tmp FWD" 43 "HH Lss Intg" 44 "HH PwrBdTemp"			
348	**Drive OL TP Data** Displays the value selected by Par 347 [Drive OL TP Sel].	Default: 0.0000 Min/Max: -/+2200000000.0000			Real
350	**Iq Actual Ref** Displays the value of motor current reference that is present at the output of the divide by flux calculation.	Units: P.U. Default: 0.0000 Min/Max: -/+8.0000			Real
351	**Iq Ref Trim** Provides an external source to command, trim or offset the internal motor current reference. This value is summed with Par 350 [Iq Actual Ref] before the current limit is applied. Scaling is in per unit motor current.	Units: P.U. Default: 0.0000 Min/Max: -/+8.0000	✓	✓	Real
352	**Is Actual Lim** Displays the largest allowable stator motor current. The range of allowable motor current is limited by the maximum drive current. Scaling is in per unit motor current.	Units: P.U. Default: 1.0000 Min/Max: 0.0000/8.0000			Real
353	**Iq Actual Lim** Displays the largest allowable torque producing (Iq) motor current. The range of allowable Iq motor current is limited by the maximum drive current and is adjusted by the motor flux current. Scaling is in per unit Iq motor current.	Units: P.U. Default: 1.0000 Min/Max: 0.0000/8.0000			Real
354	**Iq Rate Limit** Enter the maximum rate of change for Current Reference, in per unit current/ sec. Par 90 [Spd Reg BW] will be limited to 2/3 of this value.	Units: /Sec Default: 1000.0000 Min/Max: 5.0000/10000.0000	✓	✓	Real
355	**Iq Rate Limited** Displays the current reference output of the rate limiter.	Units: P.U. Default: 0.0000 Min/Max: -/+8.0000			Real

No.	Name Description	Values	Linkable	Read-Write	Data Type
356	**Mtr Current Lim** Sets the largest allowable motor stator current. The online maximum value of this parameter is Par 2 [Motor NP FLA]. The online minimum value is 105% of the current indicated in Par 488 [Flux Current].	Units: P.U. Default: 1.5000 Min/Max: 0.0000/24.0000	✓	✓	Real
358	**Iq Ref Limited** Sets the limit value for the motor torque producing current.	Units: P.U. Default: 0.0000 Min/Max: -/+8.0000			Real
359	**Motor Flux Est** Q-axis motor voltage is divided by the motor frequency while field weakening is active. This is used to convert the torque command to a motor current (Iqs) command.	Units: P.U. Default: 0.0000 Min/Max: -/+8.0000			Real
360	**Min Flux** Sets the smallest level of flux used to convert Par 303 [Motor Torque Ref] to a current reference above base speed.	Units: P.U. Default: 0.2500 Min/Max: 0.2500/1.0000	✓	✓	Real
361	**Flx LpassFilt BW** Sets the bandwidth of the filter that adjusts the response of the flux estimate used in the torque to current conversion. Since the field time constant varies between motors, a better control response may be obtained by adjusting the filter time constant. Normally this parameter is not changed unless a significant disturbance occurs as the motor enters field weakening AND Par 360 [Min Flux] is less than 1 per unit.	Units: R/S Default: 12.0000 Min/Max: 0.5000/100.0000	✓	✓	Real
363	**Curr Ref TP Sel** Enter or write a value to select current reference data displayed in Par 364 [Curr Ref TP Data].	Default: 0 "Zero" Options: 0 "Zero" 1 "Iq Sum" 2 "Iq Lim In" 3 "Iq Lim Out" 4 "Iq Rate Stat" 5 "Limited Flux" 6 "MtrCrLimStat" 7 "Lim'dMtrCrLm" 8 "Iq Act Limit" 9 "Iq Cal Gain" 10 "Min Lim Stat" 11 "Iq Prescale" 12 "Iqtols Stat" 13 'Flux Status" 14 "Flux LPF Out" 15 "Is Per Unit" 16 "InPos IqLim" 17 "InNeg IqLim" 18 "Flx Filt Hld"			
364	**Curr Ref TP Data** Displays the data selected by Par 363 [Curr Ref TP Sel].	Units: P.U. Default: 0.0000 Min/Max: -/+8.0000			Real
365	**Encdr0 Loss Cnfg** Enter a value to configure the drive's response to an Encoder 0 Loss exception event. • 0 "Ignore" - Configures the drive to continue running, as normal, when this event occurs • 1 "Alarm" - Configures the drive to continue running and set the appropriate alarm bit when this event occurs • 2 "FltCoastStop" - configures the drive to perform a coast stop and set the appropriate fault bit, in response this event	Default: 2 "FltCoastStop" Options: 0 "Ignore" 1 "Alarm" 2 "FltCoastStop"			
366	**Encdr1 Loss Cnfg** Enter a value to configure the drive's response to an Encoder 1 Loss exception event. • 0 "Ignore" Configures the drive to continue running, as normal, when this event occurs • 1 "Alarm" - Configures the drive to continue running and set the appropriate alarm bit when this event occurs • 2 "FltCoastStop" - Configures the drive to perform a coast stop and set the appropriate fault bit, in response this event	Default: 0 "FltCoastStop" Options: 0 "Ignore" 1 "Alarm" 2 "FltCoastStop"			
367	**FB Opt0 LossCnfg** Enter a value to configure the drive's response to a Feedback Option 0 Loss exception event. • 0 "Ignore" Configures the drive to continue running, as normal, when this event occurs • 1 "Alarm" - Configures the drive to continue running and set the appropriate alarm bit when this event occurs • 2 "FltCoastStop" - Configures the drive to perform a coast stop and set the appropriate fault bit, in response this event	Default: 0 "FltCoastStop" Options: 0 "Ignore" 1 "Alarm" 2 "FltCoastStop"			
368	**FB Opt1 LossCnfg** Enter a value to configure the drive's response to a Feedback Option 1 Loss exception event. • 0 "Ignore" Configures the drive to continue running, as normal, when this event occurs • 1 "Alarm" - Configures the drive to continue running and set the appropriate alarm bit when this event occurs • 2 "FltCoastStop" - Configures the drive to perform a coast stop and set the appropriate fault bit, in response this event	Default: 0 "FltCoastStop" Options: 0 "Ignore" 1 "Alarm" 2 "FltCoastStop"			

No.	Name Description	Values	Linkable	Read-Write	Data Type
369	**Brake OL Cnfg** Enter a value to configure the drive's response to a Brake Overload (OL) Trip exception event. This event is triggered when a Dynamic Brake (DB) overload condition occurs. • 0 “Ignore” - Configures the drive to continue running, as normal, when this event occurs • 1 “Alarm” - Configures the drive to continue running and set the appropriate alarm bit when this event occurs • 2 “FltCoastStop” - Configures the drive to perform a coast stop and set the appropriate fault bit, in response this event • 3 “Flt RampStop” - Configures the drive to perform a ramp stop and set the appropriate fault bit, in response this event • 4 “FltCurLimStp” - Configures the drive to perform a current-limit stop and set the appropriate fault bit, in response this event	Default: 0 “Alarm” Options: 0 “Alarm” 1 “FltCoastStop” 2 “Flt RampStop” 3 “FltCurLimStp”			
370	**HiHp InPhsLs Cfg** Selector for the input phase loss configuration. • 0 “Ignore” - Configures the drive to continue running, as normal, when this event occurs • 1 “Alarm” - Configures the drive to continue running and set the appropriate alarm bit when this event occurs • 2 “FltCoastStop” - Configures the drive to perform a coast stop and set the appropriate fault bit, in response this event • 3 “Flt RampStop” - Configures the drive to perform a ramp stop and set the appropriate fault bit, in response this event • 4 “FltCurLimStp” - Configures the drive to perform a current-limit stop and set the appropriate fault bit, in response this event	Default 1 “Alarm” Options: 0 “Ignore” 1 “Alarm” 2 “FltCoastStop” 3 “Flt RampStop” 4 “FltCurLimStp”			
371	**Mtr OL Trip Cnfg** Enter a value to configure the drive's response to a Motor Overload (OL) Trip exception event. • 0 “Ignore” - Configures the drive to continue running, as normal, when this event occurs • 1 “Alarm” - Configures the drive to continue running and set the appropriate alarm bit when this event occurs • 2 “FltCoastStop” - Configures the drive to perform a coast stop and set the appropriate fault bit, in response this event • 3 “Flt RampStop” - Configures the drive to perform a ramp stop and set the appropriate fault bit, in response this event • 4 “FltCurLimStp” - Configures the drive to perform a current-limit stop and set the appropriate fault bit, in response this event	Default: 2 “FltCoastStop” Options: 0 “Ignore” 1 “Alarm” 2 “FltCoastStop” 3 “Flt RampStop” 4 “FltCurLimStp”			
372	**Mtr OL Pend Cnfg** Enter a value to configure the drive's response to a Motor Overload (OL) Pending exception event. • 0 “Ignore” - Configures the drive to continue running, as normal, when this event occurs • 1 “Alarm” - Configures the drive to continue running and set the appropriate alarm bit when this event occurs • 2 “FltCoastStop” - Configures the drive to perform a coast stop and set the appropriate fault bit, in response this event • 3 “Flt RampStop” - Configures the drive to perform a ramp stop and set the appropriate fault bit, in response this event • 4 “FltCurLimStp” - Configures the drive to perform a current-limit stop and set the appropriate fault bit, in response this event	Default: 1 “Alarm” Options: 0 “Ignore” 1 “Alarm” 2 “FltCoastStop” 3 “Flt RampStop” 4 “FltCurLimStp”			
373	**Motor Stall Time** Enter a value to specify the time delay between when the drive detects a Motor Stall condition and when it declares the exception event.	Units: Sec Default: 1.0000 Min/Max: 0.1000/3000.0000	✓	✓	Real
374	**Motor Stall Cnfg** Enter a value to configure the drive's response to a Motor Stall exception event. • 0 “Ignore” - Configures the drive to continue running, as normal, when this event occurs • 1 “Alarm” - Configures the drive to continue running and set the appropriate alarm bit when this event occurs • 2 “FltCoastStop” - Configures the drive to perform a coast stop and set the appropriate fault bit, in response this event • 3 “Flt RampStop” - Configures the drive to perform a ramp stop and set the appropriate fault bit, in response this event • 4 “FltCurLimStp” - Configures the drive to perform a current-limit stop and set the appropriate fault bit, in response this event	Default: 0 “Ignore” Options: 0 “Ignore” 1 “Alarm” 2 “FltCoastStop” 3 “Flt RampStop” 4 “FltCurLimStp”			

No.	Name Description	Values	Linkable	Read-Write	Data Type
375	**Inv OT Pend Cnfg** Enter a value to configure the drive's response to a Inverter Over-Temperature (OT) Pending exception event. This event is triggered when the Inverter NTC (Temperature protection) function detects the heat-sink temperature reaches to the overload warning level. • 0 “Ignore” - Configures the drive to continue running, as normal, when this event occurs • 1 “Alarm” - Configures the drive to continue running and set the appropriate alarm bit when this event occurs • 2 “FltCoastStop” - Configures the drive to perform a coast stop and set the appropriate fault bit, in response this event • 3 “Flt RampStop” - Configures the drive to perform a ramp stop and set the appropriate fault bit, in response this event • 4 “FltCurLimStp” - Configures the drive to perform a current-limit stop and set the appropriate fault bit, in response this event	Default: 1 “Alarm” Options: 0 “Ignore” 1 “Alarm” 2 “FltCoastStop” 3 “Flt RampStop” 4 “FltCurLimStp”			
376	**Inv OL Pend Cnfg** Enter a value to configure the drive's response to an Inverter Overload (OL) Pending exception event. This event is triggered when one of the Inverter Protection Current-Over-Time functions (Open Loop or Closed Loop) detects current and temperature at warning levels. • 0 “Ignore” - Configures the drive to continue running, as normal, when this event occurs • 1 “Alarm” - Configures the drive to continue running and set the appropriate alarm bit when this event occurs • 2 “FltCoastStop” - Configures the drive to perform a coast stop and set the appropriate fault bit, in response this event • 3 “Flt RampStop” - Configures the drive to perform a ramp stop and set the appropriate fault bit, in response this event • 4 “FltCurLimStp” - Configures the drive to perform a current-limit stop and set the appropriate fault bit, in response this event	Default: 1 “Alarm” Options: 0 “Ignore” 1 “Alarm” 2 “FltCoastStop” 3 “Flt RampStop” 4 “FltCurLimStp”			
377	**Inv OL Trip Cnfg** Enter a value to configure the drive's response to an Inverter Overload (OL) Trip exception event. This event is triggered when one of the Inverter Protection Current-Over-Time functions (Open Loop or Closed Loop) detects current and temperature at a fault level. • 0 “Ignore” Configures the drive to continue running, as normal, when this event occurs • 1 “Alarm” - Configures the drive to continue running and set the appropriate alarm bit when this event occurs • 2 “FltCoastStop” - Configures the drive to perform a coast stop and set the appropriate fault bit, in response this event	Default: 1 “Alarm” Options: 0 “Ignore” 1 “Alarm” 2 “FltCoastStop”			
378	**Interp Flt Cnfg** Enter a value to configure the drive's response when a Synchronization input to the Interpolator has been lost or has become excessively irregular. • 0 “Ignore” - Configures the drive to continue running, as normal, when this event occurs • 1 “Alarm” - Configures the drive to continue running and set the appropriate alarm bit when this event occurs • 2 “FltCoastStop” - Configures the drive to perform a coast stop and set the appropriate fault bit, in response this event • 3 “Flt RampStop” - Configures the drive to perform a ramp stop and set the appropriate fault bit, in response this event • 4 “FltCurLimStp” - Configures the drive to perform a current-limit stop and set the appropriate fault bit, in response this event	Default: 2 “FltCoastStop” Options: 0 “Ignore” 1 “Alarm” 2 “FltCoastStop” 3 “Flt RampStop” 4 “FltCurLimStp”			
379	**Ext Flt/Alm Cnfg** Enter a value to configure the drive's response to an External Input exception event. The event is triggered by a digital input that is configured for auxiliary fault or auxiliary aux fault by choosing option 11 “Aux Fault” or 12 “AuxFault Inv” in Pars 838 [DigIn 1 Sel], 839 [DigIn 2 Sel], or 840 [DigIn 3 Sel]. • 0 “Ignore” - Configures the drive to continue running, as normal, when this event occurs • 1 “Alarm” - Configures the drive to continue running and set the appropriate alarm bit when this event occurs • 2 “FltCoastStop” - Configures the drive to perform a coast stop and set the appropriate fault bit, in response this event • 3 “Flt RampStop” - Configures the drive to perform a ramp stop and set the appropriate fault bit, in response this event • 4 “FltCurLimStp” - Configures the drive to perform a current-limit stop and set the appropriate fault bit, in response this event	Default: 2 “FltCoastStop” Options: 0 “Ignore” 1 “Alarm” 2 “FltCoastStop” 3 “Flt RampStop” 4 “FltCurLimStp”			
381	**PreChrg Err Cnfg** Enter a value to configure the drive's response to a Precharge Error exception event. • 0 “Ignore” Configures the drive to continue running, as normal, when this event occurs • 1 “Alarm” - Configures the drive to continue running and set the appropriate alarm bit when this event occurs • 2 “FltCoastStop” - Configures the drive to perform a coast stop and set the appropriate fault bit, in response this event	Default: 2 “Alarm” Options: 0 “Ignore” 1 “Alarm” 2 “FltCoastStop”			

No.	Name Description	Values	Linkable	Read-Write	Data Type
382	**MC Cmd Lim Cnfg** Enter a value to configure the drive's response to a Motor-Controller (MC) Command Limitation exception event. This event is triggered when the motor-controller detects limit of the command values used in the motor-controller, and returns the exception event to the Velocity Position Loop (VPL). • 0 “Ignore” Configures the drive to continue running, as normal, when this event occurs • 1 “Alarm” - Configures the drive to continue running and set the appropriate alarm bit when this event occurs • 2 “FltCoastStop” - Configures the drive to perform a coast stop and set the appropriate fault bit, in response this event	Default: 2 “Alarm” Options: 0 “Ignore” 1 “Alarm” 2 “FltCoastStop”			
383	**SL CommLoss Data** Enter a value to determine what is done with the data received from SynchLink when a communication loss occurs. • 0 “Zero Data” - Resets data to zero • 1 “Last State” - Holds data in its last state	Default: 1 “Last State” Options: 0 “Zero Data” 1 “Last State”			

ATTENTION: Risk of injury or equipment damage exists. Parameter 383 [SL CommLoss Data] lets you determine the action of the drive if communications are disrupted. By default this parameter causes the drive to hold the data in its last state. You can set this parameter so that the drive resets the data to zero. Precautions should be taken to ensure that the setting of this parameter does not create hazards of injury or equipment damage.

384	**SL CommLoss Cnfg** Enter a value to configure the drive's response to SynchLink communication loss. Refer to Par 1229 [SL Error Status] for possible causes of communication loss. • 0 “Ignore” - Configures the drive to continue running, as normal, when this event occurs • 1 “Alarm” - Configures the drive to continue running and set the appropriate alarm bit when this event occurs • 2 “FltCoastStop” - Configures the drive to perform a coast stop and set the appropriate fault bit, in response this event • 3 “Flt RampStop” - Configures the drive to perform a ramp stop and set the appropriate fault bit, in response this event • 4 “FltCurLimStp” - Configures the drive to perform a current-limit stop and set the appropriate fault bit, in response this event	Default: 2 “FltCoastStop” Options: 0 “Ignore” 1 “Alarm” 2 “FltCoastStop” 3 “Flt RampStop” 4 “FltCurLimStp”			

ATTENTION: Risk of injury or equipment damage exists. Parameter 384 [SL CommLoss Cnfg] lets you determine the action of the drive if communications are disrupted. By default this parameter causes the drive to fault and coast to a stop. You can set this parameter so that the drive continues to run. Precautions should be taken to ensure that the setting of this parameter does not create hazards of injury or equipment damage.

385	**Lgx CommLossData** Enter a value to configure what drive does with the data received from the DriveLogix controller when the connection is closed or times out. • 0 “Zero Data” - Resets data to zero • 1 “Last State” - Holds data in its last state	Default: 1 “Last State” Options: 0 “Zero Data” 1 “Last State”			

ATTENTION: Risk of injury or equipment damage exists. Parameter 385 [Lgx CommLossData] lets you determine the action of the drive if communications are disrupted. By default this parameter causes the drive to hold the data in its last state. You can set this parameter so that the drive resets the data to zero. Precautions should be taken to ensure that the setting of this parameter does not create hazards of injury or equipment damage.

386	**Lgx OutOfRunCnfg** Enter a value to configure the drive's response to the DriveLogix processor being in Non-Run mode. Non-Run modes include Program, Remote-Program and Faulted. • 0 “Ignore” - Configures the drive to continue running, as normal, when this event occurs • 1 “Alarm” - Configures the drive to continue running and set the appropriate alarm bit when this event occurs • 2 “FltCoastStop” - Configures the drive to perform a coast stop and set the appropriate fault bit, in response this event • 3 “Flt RampStop” - Configures the drive to perform a ramp stop and set the appropriate fault bit, in response this event • 4 “FltCurLimStp” - Configures the drive to perform a current-limit stop and set the appropriate fault bit, in response this event	Default: 2 “FltCoastStop” Options: 0 “Ignore” 1 “Alarm” 2 “FltCoastStop” 3 “Flt RampStop” 4 “FltCurLimStp”			

ATTENTION: Risk of injury or equipment damage exists. Parameter 386 [Lgx OutOfRunCnfg] lets you determine the action of the drive if communications are disrupted. By default this parameter causes the drive to fault and coast to a stop. You can set this parameter so that the drive continues to run. Precautions should be taken to ensure that the setting of this parameter does not create hazards of injury or equipment damage.

No.	Name Description	Values	Linkable	Read-Write	Data Type
387	**Lgx Timeout Cnfg** Enter a value to configure the drive's response to a Controller to Drive connection timeout, as detected by the drive. • 0 “Ignore” - Configures the drive to continue running, as normal, when this event occurs • 1 “Alarm” - Configures the drive to continue running and set the appropriate alarm bit when this event occurs • 2 “FltCoastStop” - Configures the drive to perform a coast stop and set the appropriate fault bit, in response this event • 3 “Flt RampStop” - Configures the drive to perform a ramp stop and set the appropriate fault bit, in response this event • 4 “FltCurLimStp” - Configures the drive to perform a current-limit stop and set the appropriate fault bit, in response this event	Default: 2 “FltCoastStop” Options: 0 “Ignore” 1 “Alarm” 2 “FltCoastStop” 3 “Flt RampStop” 4 “FltCurLimStp”			

ATTENTION: Risk of injury or equipment damage exists. Parameter 387 [Lgx Timeout Cnfg] lets you determine the action of the drive if communications are disrupted. By default this parameter causes the drive to fault and coast to a stop. You can set this parameter so that the drive continues to run. Precautions should be taken to ensure that the setting of this parameter does not create hazards of injury or equipment damage.

388	**Lgx Closed Cnfg** Enter a value to configure the drive's response to the controller closing the Controller to Drive connection. • 0 “Ignore” - Configures the drive to continue running, as normal, when this event occurs • 1 “Alarm” - Configures the drive to continue running and set the appropriate alarm bit when this event occurs • 2 “FltCoastStop” - Configures the drive to perform a coast stop and set the appropriate fault bit, in response this event • 3 “Flt RampStop” - Configures the drive to perform a ramp stop and set the appropriate fault bit, in response this event • 4 “FltCurLimStp” - Configures the drive to perform a current-limit stop and set the appropriate fault bit, in response this event	Default: 2 “FltCoastStop” Options: 0 “Ignore” 1 “Alarm” 2 “FltCoastStop” 3 “Flt RampStop” 4 “FltCurLimStp”			

ATTENTION: Risk of injury or equipment damage exists. Parameter 388 [Lgx Closed Cnfg] lets you determine the action of the drive if communications are disrupted. By default this parameter causes the drive to fault and coast to a stop. You can set this parameter so that the drive continues to run. Precautions should be taken to ensure that the setting of this parameter does not create hazards of injury or equipment damage.

389	**Lgx LinkChngCnfg** Enter a value to configure the drive's response to Controller to Drive default links being removed. A default link is a link automatically set up when a communication format is selected for the Controller to Drive connection. • 0 “Ignore” - Configures the drive to continue running, as normal, when this event occurs • 1 “Alarm” - Configures the drive to continue running and set the appropriate alarm bit when this event occurs • 2 “FltCoastStop” - Configures the drive to perform a coast stop and set the appropriate fault bit, in response this event • 3 “Flt RampStop” - Configures the drive to perform a ramp stop and set the appropriate fault bit, in response this event • 4 “FltCurLimStp” - Configures the drive to perform a current-limit stop and set the appropriate fault bit, in response this event	Default: 2 “FltCoastStop” Options: 0 “Ignore” 1 “Alarm” 2 “FltCoastStop” 3 “Flt RampStop” 4 “FltCurLimStp”			

ATTENTION: Risk of injury or equipment damage exists. Parameter 389 [Lgx LinkChngCnfg] lets you determine the action of the drive if communications are disrupted. By default this parameter causes the drive to fault and coast to a stop. You can set this parameter so that the drive continues to run. Precautions should be taken to ensure that the setting of this parameter does not create hazards of injury or equipment damage.

No.	Name Description	Values	Linkable	Read-Write	Data Type
390	**SL MultErr Cnfg** Enter a value to configure the Drive Module's response to SynchLink Multiplier error. Refer to Par 1034 [SL Mult State] for possible causes for multiplier errors. • 0 “Ignore” - Configures the drive to continue running, as normal, when this event occurs • 1 “Alarm” - Configures the drive to continue running and set the appropriate alarm bit when this event occurs • 2 “FltCoastStop” - Configures the drive to perform a coast stop and set the appropriate fault bit, in response this event • 3 “Flt RampStop” - Configures the drive to perform a ramp stop and set the appropriate fault bit, in response this event • 4 “FltCurLimStp” - Configures the drive to perform a current-limit stop and set the appropriate fault bit, in response this event	Default: 2 “FltCoastStop” Options: 0 “Ignore” 1 “Alarm” 2 “FltCoastStop” 3 “Flt RampStop” 4 “FltCurLimStp”			

ATTENTION: Risk of injury or equipment damage exists. Parameter 390 [SL MultErr Cnfg] lets you determine the action of the drive if communications are disrupted. By default this parameter causes the drive to fault and coast to a stop. You can set this parameter so that the drive continues to run. Precautions should be taken to ensure that the setting of this parameter does not create hazards of injury or equipment damage.

391	**DPI CommLoss Cfg** Enter a value to configure the drive's response to the failure of a DPI port. • 0 “Ignore” - Configures the drive to continue running, as normal, when this event occurs • 1 “Alarm” - Configures the drive to continue running and set the appropriate alarm bit when this event occurs • 2 “FltCoastStop” - Configures the drive to perform a coast stop and set the appropriate fault bit, in response this event • 3 “Flt RampStop” - Configures the drive to perform a ramp stop and set the appropriate fault bit, in response this event • 4 “FltCurLimStp” - Configures the drive to perform a current-limit stop and set the appropriate fault bit, in response this event	Default: 2 “FltCoastStop” Options: 0 “Ignore” 1 “Alarm” 2 “FltCoastStop” 3 “Flt RampStop” 4 “FltCurLimStp”			

ATTENTION: Risk of injury or equipment damage exists. Parameter 391 [DPI CommLoss Cfg] lets you determine the action of the drive if communications are disrupted. By default this parameter causes the drive to fault and coast to a stop. You can set this parameter so that the drive continues to run. Precautions should be taken to ensure that the setting of this parameter does not create hazards of injury or equipment damage.

392	**NetLoss DPI Cnfg** Enter a value to configure the drive's response to communication fault from a network card at a DPI port. • 0 “Ignore” - Configures the drive to continue running, as normal, when this event occurs • 1 “Alarm” - Configures the drive to continue running and set the appropriate alarm bit when this event occurs • 2 “FltCoastStop” - Configures the drive to perform a coast stop and set the appropriate fault bit, in response this event • 3 “Flt RampStop” - Configures the drive to perform a ramp stop and set the appropriate fault bit, in response this event • 4 “FltCurLimStp” - Configures the drive to perform a current-limit stop and set the appropriate fault bit, in response this event	Default: 2 “FltCoastStop” Options: 0 “Ignore” 1 “Alarm” 2 “FltCoastStop” 3 “Flt RampStop” 4 “FltCurLimStp”			

ATTENTION: Risk of injury or equipment damage exists. Parameter 392 [NetLoss DPI Cnfg] lets you determine the action of the drive if communications are disrupted. By default this parameter causes the drive to fault and coast to a stop. You can set this parameter so that the drive continues to run. Precautions should be taken to ensure that the setting of this parameter does not create hazards of injury or equipment damage.

393	**BusUndervoltCnfg** Enter a value to configure the drive's response to DC Bus voltage falling below the minimum value. • 0 “Ignore” - Configures the drive to continue running, as normal, when this event occurs • 1 “Alarm” - Configures the drive to continue running and set the appropriate alarm bit when this event occurs • 2 “FltCoastStop” - Configures the drive to perform a coast stop and set the appropriate fault bit, in response this event	Default: 1 “Alarm” Options: 0 “Ignore” 1 “Alarm” 2 “FltCoastStop”			

No.	Name Description	Values	Linkable	Read-Write	Data Type
394	**VoltFdbkLossCnfg** Enter a value to configure the drive's response to a communication error between Motor Control (MC) and the motor voltage feedback board. • 0 “Ignore” - Configures the drive to continue running, as normal, when this event occurs • 1 “Alarm” - Configures the drive to continue running and set the appropriate alarm bit when this event occurs • 2 “FltCoastStop” - Configures the drive to perform a coast stop and set the appropriate fault bit, in response this event	Default: 2 “FltCoastStop” Options: 0 “Ignore” 1 “Alarm” 2 “FltCoastStop”			
396	**User Data Int 01** General purpose parameter available for storage of 32-bit enumerated data by the operator. This value will be retained through a power cycle.	Default: 0 Min/Max: -/+2147483648	✓	✓	32-bit Integer
397	**User Data Int 02** General purpose parameter available for storage of 32-bit enumerated data by the operator. This value will be retained through a power cycle.	Default: 0 Min/Max: -/+2147483648		✓	32-bit Integer
398	**User Data Int 03** General purpose parameter available for storage of 32-bit enumerated data by the operator. This value will be retained through a power cycle.	Default: 0 Min Max: -/+2147483648		✓	32-bit Integer
399	**User Data Int 04** General purpose parameter available for storage of 32-bit enumerated data by the operator. This value will be retained through a power cycle.	Default: 0 Min/Max: -/+2147483648		✓	32-bit Integer
400	**Rated Amps** This displays the currenting rating of the inverter. The drive automatically sets this at power up.	Units: Amps Default: 22.0000 Min/Max: 0.1000/1000.0000			Real
401	**Rated Volts** This displays the name plate voltage rating of the inverter. The drive automatically sets this at power up.	Units: Volt Default: 480 Min/Max: 75/690			16-bit Integer
402	**PWM Frequency** Sets the carrier frequency for the PWM output of the drive. Drive derating may occur at higher carrier frequencies. For derating information, refer to the *PowerFlex 700S Phase I Control - Reference Manual*, publication PFLEX-RM002. The default is dependant on the power structure of the drive.	Units: kHz Default: 2.0000 (Fr 5, 6, 9) 4.0000 (Fr 1-4) Min/Max: 1.0000/15.0000 (10.0000 Fr 5, 6, 9)			Real
403	**Voltage Class** Sets the drive configuration for high or low voltage class (I.e. a 400 or 480V ac drive). Allows a choice of configuration and affects many drive parameters including drive rated current, voltage, power, over loads and maximum PWM carrier frequency.	Default: 3 “High Voltage” Options: 2 “Low Voltage” 3 “High Voltage”			
404	**Dead Time** The time delay between turning off and turning on an upper device and a lower device in the power structure. This parameter is set at power up and is not user adjustable.	Units: µSec Default: 5.0000 Min/Max: 2.0000/100.0000			Real
405	**Dead Time Comp** The amount of voltage correction used to compensate for the loss of voltage during dead time. Do not adjust. Contact factory for alternative settings.	Units: % Default: 0 Min/Max: 0/200		✓	16-bit Integer
406	**Power Loss Mode** Enter a value to configure the drive's response to a loss of input power. Input voltage below the value specified in Par 408 [Power Loss Level]. Enter a value of 0 to make the drive coast (supply no current to the motor) during the power loss time (specified by Par 407 [Power Loss Time]. Enter a value of 2 to make the drive continue "normal" operation during the power loss time. Enter a value of 5 to make the drive provide only motor flux current during the power loss time.	Default: 0 “Coast” Options: 0 “Coast” 1 “Reserved” 2 “Continue” 3 “Reserved” 4 “Reserved” 5 “Flux Only”			
407	**Power Loss Time** Sets the time that the drive will remain in power loss mode before a fault is detected.	Units: Sec Default: 2.0000 Min/Max: 0.0000 60.0000		✓	Real
408	**Power Loss Level** Sets the bus voltage level at which ride-through begins and modulation ends. When bus voltage falls below this level, the drive prepares for an automatic reset. Enter a percentage of the bus voltage derived from the high voltage setting for the voltage class. For example: on a 400-480V drive. $0.221 \times 480\text{Vac} \times \sqrt{2} = 150\text{Vdc}$	Units: % Default: 22.1 Min/Max: 15/95		✓	16-bit Integer
409	**Line Undervolts** Controls the level of bus voltage that is needed to complete precharge and sets the level for undervoltage alarm/fault detection. Enter a percentage of the bus voltage derived from the value in Par 401 [Rated Volts]. For example: on a 480V drive. $0.615 \times 480\text{Vac} \times \sqrt{2} = 418\text{Vdc}$	Units: % Default: 61.5000 Min/Max: 10.0000/90.0000		✓	Real
410	**PreChrg TimeOut** Sets the time duration of precharge. If bus voltage does not stabilize within this amount of time, a Precharge Error exception event occurs.	Units: Sec Default: 30.0000 Min/Max: 10.0000 180.0000		✓	Real

No.	Name Description	Values	Linkable	Read-Write	Data Type
411	**PreChrg Control** Must equal 1 “Enbl PrChrg” to allow the drive to exit precharge and begin to run. Link this parameter to a controller output word to coordinate the precharge of multiple drives.	Default: 1 “Enbl PrChrg” Options: 0 “Hold PrChrg” 1 “Enbl PrChrg”			
412	**Power EE TP Sel** Enter or write a value to select drive power EEPROM data displayed in Par 413 [Power EE TP Data].	Default: 0 Zero			

Options:

0	Zero	12	Mw Hrs Accum	24	Inv Rated Kw	36	IGBTs per Pk	48	Diode JC Tr	60	DB Ambt Tmax	72	Mtr IR Vdrop	84	Mtr IR Vdrop
1	Volt Class	13	Inv High Vlt	25	Inv Rated V	37	GBT Rated V	49	Diode JC Tc	61	Convt Type	73	Mtr Id Ref	85	Mtr Id Ref
2	Assy Rev	14	Reserved	26	Inv Rated A	38	IGBT Rated A	50	GBT Tjmax	62	DC Bus Induc	74	HH Data Rev	86	HH Extr Data
3	ASA S/N	15	Fan/Pwr Cntl	27	Inv 1min Amp	39	IGBT V Thres	51	HS Max DegC	63	AC Inp Induc	75	HH Dev Type	87	HH Volt Indx
4	Manuf Year	16	Temp Sensor	28	inv 3sec Amp	40	IGBT Slope R	52	DB IGBT Amp	64	Precharg Res	76	HH Serial #	88	HH Size Indx
5	Manuf Month	17	Phs AmpScale	29	SW OverC Amp	41	IGBT Sw Engy	53	DB ohms	65	PrechThrm Tc	77	HH Test Date	89	HH Option
6	Manuf Day	18	Gnd AmpScale	30	DC Bus Cap	42	IGBT JC Tres	54	DB E Jo/degC	66	Mtr NP Units	78	HH Vcn Code	90	HH Hrd Prdct
7	Tst ProcStat	19	Bus VltScale	31	Min PWM Khz	43	IGBT JC Tc	55	DB EB C/Wat	67	Mtr NP Power	79	HH CrsCnc ID	91	HH H/W Mdfy
8	Life PwrCycl	20	Sml PS Watts	32	Max PWM Khz	44	IGBT CS Tres	56	DB B Jo/degC	68	Mtr NP Volts	80	HH P/B ID	92	HH 1V/Amp
9	Life Pwrup	21	Sml PS Min V	33	Dfl PWM Khz	45	IGBT CS Tc	57	DB BA C/Watt	69	Mtr NP Amps	81	HH S/W ID	93	HH 2s/Amp
10	Life RunTime	22	Lrg PS Watts	34	PWM Dead us	46	Diode V Thrs	58	DB Elem Tmax	70	Mtr NP Freq	82	HH P/B Rev	94	HH Scale
11	Kw Accum	23	Lrg PS Min V	35	Drive Frame	47	Diode SlopeR	59	DB Body Tmax	71	Mtr NP RPM	83	HH S/W Rev		

413	**Power EE TP Data** Displays the data selected by Par 412 [Power EE TP Sel].	Default: 0 Min/Max: -/+2200000000				Real
414	**Brake/Bus Cnfg** Configures the brake and bus operation of the drive. • Set bit 0 [Brake Enable] to enable the operation of the internal brake transistor. • Set bit 1 [Brake Extern] to configure the brake to use an external resistor. • Set bit 2 [BusRef High] to select the "high" voltage setting as the turn-on point for the Bus Voltage Regulator. The "high" setting brake operation starts when bus voltage reaches the value of Par 415 [BusReg/Brake Ref], and the Bus Voltage Regulator operation starts when bus voltage reaches the value of 415 [BusReg/Brake Ref] plus 4.5%. With the "low" setting both brake and regulator operation start when bus voltage reaches the value of 415 [BusReg/Brake Ref]. • Set bit 3 [Bus Reg En] to enable the Bus Voltage Regulator. The output of the Bus Voltage Regulator is summed with Par 128 [Regen Power Lim] and fed into the Power Limit Calculator. It, in effect, reduces negative torque references when the bus voltage is too high.					
415	**BusReg/Brake Ref** Sets the “turn-on” voltage for the bus regulator and brakes. Enter a percentage of the high voltage setting for the voltage class. For example, on a 400-480V drive: $111 \times \sqrt{2} \times 480 = \text{VDC}$	Units: % Default: 111.0000 Min/Max: 110.5000117.8000		✓	Real
416	**Brake PulseWatts** Limits the power delivered to the external Dynamic Brake (DB) resistor for one second, without exceeding the rated element temperature. You may change the value of this parameter only if you have selected an external DB resistor (set bit 1 [Brake Extern] of Par 414 [Brake/Bus Cnfg]). If this rating is not available from the resistor vendor, you can approximate it with this equation: Par 416 [Brake PulseWatts] = 75,000 x Weight, where Weight equals the weight of the resistor wire element in pounds (not the entire weight of the resistor). Another equation you can use is: Par 416 [Brake PulseWatts] = Time Constant x Brake Watts; where Time Constant equals the amount of time to reach 63% of its rated temperature the maximum power applied, and Brake Watts is the maximum power rating of the resistor.	Units: Watt Default: 2000.0000 Min/Max: 1.0000/1000000.0000		✓	Real
417	**Brake Watts** Sets the maximum continuous power reference for the Dynamic Brake (DB). You may change the value of this parameter only if you have selected and external DB resistor (set bit 1 [Brake Extern] of Par 414 [Brake/Bus Cnfg]).	Units: Watt Default: 100.0000 Min/Max: 0.0000/5000.0000		✓	Real

Options	Reserved	Reserved	Reserved	Reserved	Reserved	Reserved	Reserved	Reserved	Reserved	Reserved	Reserved	Reserved	Bus Reg En	Bus Ref High	Brake Extern	Brake Enable
Default	0	0	1	1	0	0	0	0	0	0	0	0	0	0	0	0
Bit	15	14	13	12	11	10	9	8	7	6	5	4	3	2	1	0

0 = False
1 = True

No.	Name Description	Values	Linkable	Read-Write	Data Type
418	**Brake TP Sel** Enter or write a value to select the drive overload data displayed in Par 419 [Brake TP Data].	Default: 0 "Zero" Options: 0 "Zero" 1 "Duty Cycle" 2 "Power Actual" 3 "Max BodyTemp" 4 "Max ElemTemp" 5 "BodyTemp Act" 6 "ElemTemp Act" 7 "BTmpTripStat" 8 "ETmpTripStat" 9 "Int DB Ohms" 10 "Data State" 11 "MC BrakeEnbl" 12 "1/rdb" 13 "1/th_eb" 14 "1/ce" 15 "tamax" 16 "1/th_ba" 17 "1/cb" 18 "DB IGBT Amp"			
419	**Brake TP Data** Displays the data selected by Par 418 [Brake TP Sel].	Default: 0.0000 Min/Max: -/+2200000000.0000			Real
421	**Iqs Integ Freq** Sets the break frequency of the torque producing (q-axis) current regulator. This and Par 422 [Iqs Reg P Gain] determine the integral gain for the q-axis current regulator. Set by the autotune procedure. Do not change this value.	Units: R/S Default: 10 Min/Max: 0/32767		✓	16-bit Integer
422	**Iqs Reg P Gain** Sets the proportional gain of the torque producing (q-axis) current regulator. Set by the autotune procedure. Do not change this value.	Default: 1.0 Min/Max: 0.0/100.0 Comm Scale: x 10		✓	16-bit Integer
423	**Iqs Rate Limit** Sets the limit of the rate of change for the torque producing (q-axis) current regulator. Do not change this parameter. Use Par 355 [Iq Rate Limited] to control the q-axis current rate limit.	Units: %/mS Default: 800.0 Min/Max: 0.0/800.0 Comm Scale: x 10		✓	16-bit Integer
424	**Flux Ratio Ref** Active only in the Field Oriented Control (FOC) 2 control mode (when Par 485 [Motor Ctrl Mode] equals 2 "FOC 2"), when activated (Par 511 [FOC2 Mode Config], bit 28 [FlxRatRf Use] is set). Provides a scaling factor for the flux producing (d-axis) current reference. • When active (Par 511 [FOC2 Mode Config], bit 28 [FlxRatRf Use] is set), Flux Producing (d-axis) Current Reference = Par 488 [Flux Current] x Par 424 [Flux Ratio Ref]. • When inactive (Par 511 [FOC2 Mode Config], bit 28 [FlxRatRf Use] is cleared) Flux Producing (d-axis) Current Reference = Par 488 [Flux Current] below base speed and Flux Producing (d-axis) Current Reference = Par 488 [Flux Current] x motor base speed/motor speed above base speed.	Units: % Default: 99.99 Min/Max: 12.50/399.99 Comm Scale: 100 = 32767		✓	16-bit Integer
425	**Flux Rate Limit** Sets the limit of the rate of change for flux producing (d-axis) current.	Units: %/mS Default: 1.0 Min/Max: 0.0/195.3 Comm Scale: x 10		✓	16-bit Integer
426	**Flux Satur Coef** This represents the amount of flux current required to compensate for the flux saturation effect of the motor.	Units: %/ Default: 0.0 Min/Max: 0.0/51.3 Comm Scale: x 10		✓	
427	**PM Mtr CEMF Comp** Provides CEMF compensation for the torque producing (q-axis) current in the permanent magnet motor mode.	Units: % Default: 0 Min/Max: 0/100		✓	16-bit Integer
428	**IReg IGain Fctr** Adjustment for current regulator integral frequency factor (gain).	Default: 1 Min/Max: 1/20			
429	**Ids Integ Freq** Sets the break frequency of the flux producing (d-axis) current regulator. This and Par 430 [Ids Reg P Gain] determine the integral gain for the d-axis current regulator. Set by the autotune procedure. Do not change this value.	Units: R/S Default: 10 Min/Max: 0/32767		✓	16-bit Integer
430	**Ids Reg P Gain** Sets the proportional gain of the flux producing (d-axis) current regulator. Set by the autotune procedure. Do not change this value.	Default: 1.0 Min/Max: 0.0/100.0 Comm Scale: x 10		✓	16-bit Integer
431	**Test Current Ref** Sets the current reference used for Motor Control (MC) Test Mode.	Units: % Default: 50.0 Min/Max: 0.0/799.9 Comm Scale: x 10		✓	16-bit Integer
432	**Test Freq Ref** Sets the frequency reference used for Motor Control (MC) Test Mode.	Units: % Default: 10.0 Min/Max: -/+799.9 Comm Scale: x 10		✓	16-bit Integer
433	**Test Freq Rate** Sets the rate of change of frequency reference used for Motor Control (MC) Test Mode.	Units: % /S Default: 5.0 Min/Max: 0.0/1000.0 Comm Scale: x 10		✓	16-bit Integer
434	**Mtr Vds Base** Displays the motor flux producing (d-axis) voltage command when running at nameplate motor speed and load. This value is determined during the autotune procedure. Do not change this value.	Default: 0 Min/Max -8192/0			16-bit Integer

No.	Name Description	Values	Linkable	Read-Write	Data Type
435	**Mtr Vqs Base** Displays the motor torque producing (q-axis) voltage command when running at nameplate motor speed and load. This value is determined during the autotune procedure. Do not change this value.	Default: 0 Min/Max: 0/8192			16-bit Integer
437	**Vqs Max** Displays the maximum torque producing (q-axis) voltage allowed on the motor. Adaptation is disabled below this voltage. This value is determined during the autotune procedure. Do not change this value.	Default: 7971 Min/Max: 0/32767		✓	16-bit Integer
438	**Vds Max** Displays the maximum flux producing (d-axis) voltage allowed on the motor. Adaptation is disabled below this voltage. This value is determined during the autotune procedure. Do not change this value.	Default: 5793 Min/Max: 0/32767		✓	16-bit Integer
439	**Vqs Min** Displays the minimum torque producing (q-axis) voltage required for motor control adaption. Adaptation is disabled below this voltage. This value is determined during the autotune procedure. Do not change this value.	Default: 246 Min/Max: -/+32767		✓	16-bit Integer
440	**Vds Min** Displays the minimum flux producing (d-axis) voltage required for motor control adaption. Adaptation is disabled below this voltage. This value is determined during the autotune procedure. Do not change this value.	Default: 246 Min/Max: -/+32767		✓	16-bit Integer
441	**Vds Fdbk Filt** Displays measured filtered motor flux producing (d-axis) voltage.	Default: 0 Min/Max: -/+32767			16-bit Integer
442	**Vqs Fdbk Filt** Displays measured filtered motor torque producing (q-axis) voltage.	Default: 0 Min/Max: -/+32767			16-bit Integer
443	**Flux Reg P Gain1** Sets the Proportional (P) gain for the flux regulator. Do not change this value.	Default: 150 Min/Max: 0/32767		✓	16-bit Integer
444	**Flux Reg I Gain** Sets the Integral (I) gain for the flux regulator. Do not change this value.	Default: 350 Min/Max: 0/32767		✓	16-bit Integer
445	**Slip Gain Max** Displays the maximum slip frequency allowed in the motor control. Scaling is in hertz x 256. This value is determined during the autotune procedure. Do not change this value.	Units: % Default: 300 Min/Max: 100/10000		✓	16-bit Integer
446	**Slip Gain Min** Displays the minimum slip frequency allowed in the motor control. Scaling is in hertz x 256. This value is determined during the autotune procedure. Do not change this value.	Units: % Default: 50 Min/Max: 0/100		✓	16-bit Integer
447	**Slip Reg P Gain** Sets the Proportional (P) gain for the slip regulator. Do not change this value.	Default: 35 Min/Max: 0/32767 Comm Scale: x 1		✓	16-bit Integer
448	**Slip Reg I Gain** Sets the Integral (I) gain for the slip regulator. Do not change this value.	Default: 100 Min/Max: 0/32767		✓	16-bit Integer
449	**Freq Reg I Gain** Sets the integral gain of the Frequency Regulator, which estimates motor speed when sensorless feedback is selected. Do not change this value.	Default: 250 Min/Max: 0/32767	✓	✓	16-bit Integer
450	**Freq Reg P Gain** Sets the proportional gain of the Frequency Regulator, which estimates motor speed when sensorless feedback is selected. Do not change this value.	Default: 350 Min/Max: 0/32767	✓	✓	16-bit Integer
451	**SrLss Preset Spd** Motor speed at which to start the sensorless frequency search.	Units: RPM Default: 1750.0 Min/Max: -/+13999.6			
453	**Iu Offset** Sets the current offset correction for the phase U current. Value is set automatically when the drive is not running and Motor Control (MC) is not faulted. Do not change this value.	Default: 0 Min/Max: -/+32767		✓	16-bit Integer
454	**Iw Offset** Sets the current offset correction for the flux producing (d-axis) current regulator. This value is set automatically when the drive is not running and Motor Control (MC) is not faulted. Do not change this value.	Default: 0 Min/Max: -/+32767		✓	16-bit Integer
469	**StatorInduc Gain** Displays the current regulator feedforward compensation. Do not change this value.	Units: % Default: 0 Min/Max: 0/100		✓	16-bit Integer
470	**Flux Reg P Gain2** Displays the additional proportional gain used at the start of Bus voltage limited field weakening. Do not change this value.	Default: 1000 Min/Max: 0/32767		✓	16-bit Integer
472	**PreCharge Delay** Adjusts a delay between the time all other precharge conditions have been met and the time the drive leaves the precharge state. Can be used to control the sequence of precharge completion in a drive system. The maximum value of this parameter is calculated as follows: Par 472 [PreCharge Delay] = Par 410 [PreChrg TimeOut] - 1.0 second.	Units: Sec Default: 2.0 Min/Max: 0.0/Calculated		✓	16-bit Integer
473	**Freq Reg FF Gain** Provides feed forward gain to the Frequency Regulator, which estimates motor speed when sensorless feedback is selected. Higher gains make operation at low speeds smoother. However, higher gains may make operation at high speeds less stable.	Default: 300 Min/Max: 0/32767		✓	16-bit Integer

No.	Name Description	Values	Linkable	Read-Write	Data Type
474	**Freq Reg We BW** Sets the electrical (stator) frequency bandwidth for the Frequency Regulator, which estimates motor speed when sensorless feedback is selected. Must always be set to a value higher than Par 475 [Freq Reg Wr BW].	Default: 150 Min/Max: 0/32767		✓	16-bit Integer
475	**Freq Reg Wr BW** Sets the rotor (speed) frequency bandwidth for the Frequency Regulator, which estimates motor speed when sensorless feedback is selected. Must always be set to a value higher than Par 97 [Act Spd Reg BW]. Normal applications should use a value approximately 50% greater than Par 97. Applications with large dynamic ranges can use values 200-300% greater than Par 97. However large values can result in pull-outs and unstable operation.	Default: 30 Min/Max: 0/32767		✓	16-bit Integer
476	**Slip Gain Comp** Provides slip gain compensation for sensorless speed adjustment.	Units: % Default: 100.00 Min/Max: 0.00/400.00		✓	16-bit Integer
477	**Est Theta Delay** Active only in Permanent Magnet motor mode (when Par 485 [Motor Ctrl Mode] equals 2 “PMag Motor”). Provides a delay for the function that compares the estimated rotor position and the data from the position sensor.	Units: mSec Default: 10 Min/Max: 2/1024		✓	16-bit Integer
485	**Motor Ctrl Mode** Enter a value to select the operating mode for the Motor Control (MC). • 0 “FOC” - (Field Oriented Control) is induction motor control with voltage adaptation. • 1 “FOC 2” (Field Oriented Control 2) is induction motor control with temperature adaptation. • 2 “Pmag Motor” - (Permanent Magnet Motor Control) is permanent magnet motor operation. • 4 (Test) - Is the test mode.	Default: 0 “FOC” Options: 0 “FOC” 1 “FOC 2” 2 “PMag Motor” 3 “Reserved” 4 “Test”			
486	**Rated Slip Freq** Displays the control slip frequency, determined from Par 3 [Motor NP Hertz] and Par 4 [Motor NP RPM]. Measured by the autotune procedure. Do not change this value.	Units: Hz Default: 0.470 Min/Max: 0.000/32.000 Comm Scale: x 1000		✓	16-bit Integer
487	**Motor NTC Coef** Defines a coefficient used to calculate the rotor temperature from the measured stator temperature. Used only in Field Oriented Control - 2 (FOC2) mode.	Units: % Default: 100 Min/Max: 50/200		✓	16-bit Integer
488	**Flux Current** Specifies the magnetizing current that produces rated flux in the motor in a per unit (percent representation). Measured by the autotune procedure. Do not change this value.	Units: % Default: 30.00 Min/Max: 0.00/75.00 Comm Scale: x 100		✓	16-bit Integer
490	**StatorInductance** Displays the sum of the stator and cable inductances of the motor in per unit (percent representation), as determined by the autotune procedure. Scaled to percent of rated motor impedance. Do not change this value.	Units: % Default: 100.00 Min/Max: 0.00/799.99 Comm Scale: 100 = 8192\		✓	16-bit Integer
491	**StatorResistance** Displays the sum of the stator and cable resistances of the motor in per unit (percent representation), as determined by the autotune procedure. Scaled to percent of rated motor impedance. Do not change this value.	Units: % Default: 1.00 Min/Max: 0.00/100.00 Comm Scale: 100 = 8192		✓	16-bit Integer
492	**Leak Inductance** Displays the sum of the motor stator, rotor leakage, and motor cable inductances in per unit (percent representation), as determined by the autotune procedure. Scaled to percent of rated motor impedance. Do not change this value.	Units: % Default: 20.00 Min/Max: 0.00/100.00 Comm Scale: 100 = 8192		✓	16-bit Integer
493	**Leak Indc Sat 1** Displays the leakage inductance correction for the first overload level as determined by the autotune procedure.	Units: % Default: 100.00 Min/Max: 25.00/100.00			16-bit Integer
494	**Leak Indc Sat 2** Displays the leakage inductance correction for the first overload level as determined by the autotune procedure.	Units: % Default: 100.00 Min/Max: 25.00/100.00			16-bit Integer
500	**Bus Util Limit** Sets the maximum allowed bus voltage utilization for the Motor Control. Do not change this value. Higher values may result in control instability or over-current faults.	Units: % Default: 90.0 Min/Max: 0.0/100.0 Comm Scale: 100 = 8192		✓	16-bit Integer
501	**Torque En Dly** Sets the delay between the time the drive is enabled and the time the Motor Control applies torque.	Units: mSec Default: 100 Min/Max: 0/32767 Comm Scale: 100 = 8192		✓	16-bit Integer
502	**Rotor Resistance** Displays rotor resistance, as determined by the autotune procedure. Scaled to percent of rated motor impedance. Do not change this value.	Units: % Default: 1.00 Min/Max: 0.00/100.00 Comm Scale: 100 = 8192		✓	16-bit Integer

No.	Name Description	Values	Linkable	Read-Write	Data Type
503	**Current Reg BW** Sets the bandwidth for the current regulator. Par 402 [PWM Frequency] limits the maximum value. Reducing the value reduces current regulator over-shoot.	Units: R/S Default: 600 Min/Max: 100/30000		✓	16-bit Integer
504	**PM AbsEncd Offst** Determined by the autotune procedure.	Default: 0 Min/Max: 0/65535		✓	16-bit Integer
505	**PM TestWait Time** Defines the time interval used for the automated measurement of Par 504 [PM AbsEncd Offst] for a Permanent Magnet (PM) motor.	Units: mSec Default: 2000 Min/Max: 500/5000		✓	16-bit Integer
506	**PM Test Idc Ramp** Defines the ramp rate of the flux producing (d-axis) current reference that is used for the automated measurement of Par 504 [PM AbsEncd Offst] for a Permanent Magnet (PM) motor.	Units: %/mS Default: 0.1 Min/Max: 0.0/195.3 Comm Scale: x 10		✓	16-bit Integer
507	**PM Test FreqRamp** Defines the ramp rate of the frequency reference that is used for the automated measurement of Par 504 [PM AbsEncd Offst] for a Permanent Magnet (PM) motor.	Units: %/mS Default: 0.1 Min/Max: 0.0/195.3 Comm Scale: x 10		✓	16-bit Integer
508	**PM Test Freq Ref** Defines the frequency reference that is used for the automated measurement of Par 504 [PM AbsEncd Offst] for a Permanent Magnet (PM) motor.	Units: % Default: 10.0 Min/Max: -/+799.9 Comm Scale: x 10		✓	16-bit Integer
509	**PM Test I Ref** Defines the amplitude of the flux producing (d-axis) current reference that is used for the automated measurement of Par 504 [PM AbsEncd Offst] for a Permanent Magnet (PM) motor.	Units: % Default: 30.0 Min/Max: 0.0/799.9 Comm Scale: x 10		✓	16-bit Integer

510 FOC Mode Config

Configures Field Oriented Control (FOC) operation.
Note: Bit 15 [LwSpdRflctWv] was added for firmware version 2.06

ATTENTION: Do not modify this parameter. Motor/Drive instabilities and damage could result.

Options	Reserved	Reserved	Reserved	Reserved	Reserved	FS PresetSpd	Reserved	Reserved	SrLssFStrtEn	SrLss RdThru	SrLssWeLimit	SrLss WeHold	Reserved	Reserved	Reserved	Reserved	LwSpdRflctWv	Slip Reg En	SlipGain Est	RsEst Update	RsEst Ratio	RsEst Adapt	ReflWaveComp	BusGain Comp	LwSpd VqsReg	Flux Reg Use	Flux Reg En	Reserved	Reserved	Reserved	Reserved	Reserved
Default	0	0	0	0	0	0	0	0	0	0	0	0	0	0	0	0	0	1	1	1	0	0	1	1	0	1	1	0	0	0	0	0
Bit	31	30	29	28	27	26	25	24	23	22	21	20	19	18	17	16	15	14	13	12	11	10	9	8	7	6	5	4	3	2	1	0

0 = False
1 = True

Bit	Definition
23	Enables Sensorless Flying start
26	Sensorless Flying start function will use the speed set in Par 451 [SrLss Preset Spd].

511 FOC2 Mode Config

Configures Field Oriented Control - 2 (FOC2) operation.

ATTENTION: Do not modify this parameter. Motor/Drive instabilities and damage could result.

Options	LnrSnsr Dir	LnrSnsr Use	Reserved	FlxRatRf Use	NTC Active	Reserved	Reserved	CEMF We Use	Reserved	Reserved	Reserved	Reserved	Reserved	Reserved	Reserved	Reserved	Reserved	Reserved	Reserved	Reserved	Reserved	Reserved	RefIWaveComp	BusGain Comp	Reserved	Reserved	Reserved	Reserved	Reserved	Reserved	Reserved	Reserved
Default	0	0	0	0	0	0	0	0	0	0	0	0	0	0	0	0	0	1	1	0	0	0	1	10	0	1	1	0	0	0	0	0
Bit	31	30	29	28	27	26	25	24	23	22	21	20	19	18	17	16	15	14	13	12	11	10	9	8	7	6	5	4	3	2	1	0

0 = False
1 = True

No.	Name Description	Values	Linkable	Read-Write	Data Type

512 **PMag Mode Cnfg**

Configures Permanent Magnet (PM) operation.

ATTENTION: Do not modify this parameter. Motor/Drive instabilities and damage could result.

Options	LinrSnsr Dir	LinrSnsr Use	Reserved	FlxRatRf Use	NTC Active	Reserved	Reserved	CEMF We Use	Reserved	Reserved	Reserved	Reserved	PMVltRegUse	PMVltRegEn	Reserved	Reserved	Reserved	Reserved	Reserved	Reserved	Reserved	Reserved	RefIWaveComp	BusGain Comp	Reserved	Reserved	Reserved	Reserved	Reserved	Reserved	Reserved	Reserved
Default	0	0	0	0	1	0	0	0	0	0	0	0	0	0	0	0	0	0	0	0	0	0	1	0	0	0	0	0	0	0	0	0
Bit	31	30	29	28	27	26	25	24	23	22	21	20	19	18	17	16	15	14	13	12	11	10	9	8	7	6	5	4	3	2	1	0

0 = False
1 = True

514 **Test Mode Config**

Configures the Motor Control (MC) test mode.

ATTENTION: Do not modify this parameter. Motor/Drive instabilities and damage could result.

Options	Reserved	Reserved	Reserved	Reserved	Reserved	Reserved	Reserved	Reserved	Reserved	Reserved	Reserved	Reserved	Reserved	Reserved	Reserved	Reserved	Reserved	Reserved	Reserved	Reserved	Reserved	Reserved	RefIWaveComp	BusGain Comp	Reserved	Reserved	Reserved	Reserved	Reserved	Reserved	Reserved	Reserved
Default	0	0	0	0	0	0	0	0	0	0	0	0	0	0	0	0	0	0	0	0	0	0	0	1	0	0	0	0	0	0	0	0
Bit	31	30	29	28	27	26	25	24	23	22	21	20	19	18	17	16	15	14	13	12	11	10	9	8	7	6	5	4	3	2	1	0

0 = False
1 = True

515 **FOC Tune Config**

ATTENTION: Do not modify this parameter. Motor/Drive instabilities and damage could result.

Options	Reserved	Reserved	Reserved	Reserved	Reserved	Reserved	NoRotateTune	Reserved	Reserved	Reserved	Reserved	Reserved	Reserved	Reserved	Reserved	Reserved
Default	0	0	0	0	0	0	0	0	0	0	0	0	0	0	0	0
Bit	15	14	13	12	11	10	9	8	7	6	5	4	3	2	1	0

0 = False
1 = True

516 **FOC2 Tune Config**

ATTENTION: Do not modify this parameter. Motor/Drive instabilities and damage could result.

Options	Reserved	Reserved	Reserved	Reserved	Reserved	Reserved	NoRotateTune	Reserved	Reserved	Reserved	Reserved	Reserved	Reserved	Reserved	Reserved	Reserved
Default	0	0	0	0	0	0	0	0	0	0	0	0	0	0	0	0
Bit	15	14	13	12	11	10	9	8	7	6	5	4	3	2	1	0

0 = False
1 = True

No.	Name Description	Values	Linkable	Read-Write	Data Type
517	**PMag Tune Cnfg** Configures the Permanent Magnet Motor tuning mode. **ATTENTION:** Do not modify this parameter. Motor/Drive instabilities and damage could result.				
520	**PM Q Inductance** Indicates the percent-per unit inductance of the motor stator in the torque producing (q-axis).	Units: % Default: 20.00 Min/Max: 0.00/399.99 Comm Scale: 100 = 8192		✓	16-bit Integer
521	**PM D Inductance** Indicates the percent-per unit inductance of the motor stator in the flux producing (d-axis).	Units: % Default: 20.00 Min/Max: 0.00/399.99 Comm Scale: 100 = 8192		✓	16-bit Integer
522	**PM Stator Resist** Indicates the percent-per unit resistance of the motor stator.	Units: % Default: 1.50 Min/Max: 0.00/100.00 Comm Scale: 100 = 8192		✓	16-bit Integer
523	**PM Mtr CEMF Coef** Indicates the coefficient for Counter Electro Motive Force (CEMF) voltage, normalized to base motor speed.	Units: % Default: 89.99 Min/Max: 0.00/399.99 Comm Scale: 100 = 8192		✓	16-bit Integer
526	**MC Build Number** Displays the build number of the drive's Motor Control (MC) software.	Default: 0 Min/Max: 0/65535			16-bit Integer
527	**MC Firmware Rev** Displays the major and minor revision levels of the drive's Motor Control (MC) software.	Default: 0.00 Min/Max: 0.00/655.35 Comm Scale: x 10			16-bit Integer
533	**Slip Ratio** Used by the Field Oriented Control - 2 (FOC2) mode. Indicates the present operating slip frequency at 100% Torque Producing Current (Iqs) scaled to hertz x 100.	Units: Hz Default: 0.00 Min/Max: 0.00/327.67 Comm Scale: x 10			16-bit Integer
534	**Stator Frequency** Displays stator frequency as a percentage of Par 3 [Motor NP Hertz].	Units: % Default: 0.0 Min/Max: -/+800.0 Comm Scale: x 10			16-bit Integer
535	**Iqs Command** Displays the torque producing (q-axis) current command.	Units: % Default: 0.0 Min/Max: -/+800.0 Comm Scale: x 10			16-bit Integer
537	**Ids Command** Displays the flux producing (d-axis) current command.	Units: % Default: 0.0 Min/Max: -/+800.0 Comm Scale: x 10			16-bit Integer
539	**Iqs Feedback** Displays torque producing (q-axis) current feedback.	Units: P.U. Default: 0.0000 Min/Max: -/+8.0000			Real
540	**Ids Feedback** Displays flux producing (d-axis) current feedback.	Units: P.U. Default: 0.0000 Min/Max: -/+8.0000			Real
541	**Vqs Command** Displays the command for initiation of voltage on the torque producing axis (q-axis).	Units: % Default: 0 Min/Max: -/+200 Comm Scale: 100 = 8192			16-bit Integer
542	**Vds Command** Displays the command for initiation of voltage on the flux producing axis (d-axis).	Units: % Default: 0 Min/Max: -/+200 Comm Scale: 100 = 8192			16-bit Integer

Options

	Reserved	Reserved	Reserved	Reserved	Reserved	Reserved	Reserved	IndTestA set	Reserved	Reserved	Reserved	Reserved	Reserved	Reserved	Reserved	Reserved
Default	0	0	0	0	0	0	0	0	0	0	0	0	0	0	0	0
Bit	15	14	13	12	11	10	9	8	7	6	5	4	3	2	1	0

0 = False
1 = True

No.	Name Description	Values	Linkable	Read-Write	Data Type
544	**MC TP Select** Enter or write a value to select Motor Control (MC) data displayed in Pars 545 [MC TP Value], and 546 [MC TP Bit]. Pars 545 [MC TP Value], and 546 [MC TP Bit] are diagnostic tools you can use to view internal drive parameters.	Default: 0 MulqsRef2			

Options:

0	MulqsRef2	38	Wr2	76	SinThtaEcor4	114	TestMark71	152	SrLssWeEst2	190	RsEstPhi
1	SlipRatio	39	FluxRatio1	77	MulRef2B	115	TestMark72	153	SrLssPrportl	191	RsEstSinPhi
2	Ws	40	VbusFdbk	78	SpdFdbk	116	TestMark73	154	SrLssPI	192	RsEstVqsFbkP
3	WrEst2	41	FluxRatio2	79	SpdIntegral	117	TestMark74	155	SrLssQAWeEst	193	RsEWeLadsCmd
4	We	42	FluxRatio3	80	SpdPrportnal	118	TestMark75	156	SLWeGainFwk	194	REWeLadsCmdP
5	VdsCmd	43	FluxRatio4	81	SpdPI	119	TestMark76	157	SrLssWsFf	195	RsEWeLaqsCmd
6	VqsCmd	44	MuFlxRtioRef	82	SpdRef	120	TestMark76	158	SrLssWsEst	196	RsEstIdsRat
7	VuCmd1	45	RcpFlxRatio1	83	SlipGainEst	121	TestMark78	159	SrLssWsCmd	197	RsEstIqsRat
8	VvCmd1	46	MulfluxRef	84	SlipGainFf	122	TestMark79	160	SrLssVdsErr	198	MulqsRef2
9	VwCmd1	47	MultestRef	85	Ws2	123	TestMark7A	161	SLVdsErrComp	199	EstThetaByMV
10	IuFdbk	48	MotVntc	86	SlipGain	124	TestMark7B	162	SrLssStrtTmr	200	ETVdsFbkA
11	IwFdbk	49	BaseSlip	87	SlipGainFltr	125	TestMark7C	163	SrLssWsMxLim	201	ETVqsFbkA
12	IdsFdbk	50	VbusFdbk2	88	SlipVdsCmd	126	TestMark7D	164	SrLssWeAve	202	ETVdsFbkS
13	IqsFdbk	51	VdsFdbk2	89	SlpVdsCmdFlt	127	TestMark7E	165	SrLssWeEst	203	ETVqsFbkS
14	VdsFdbk	52	VqsFdbk2	90	VdsLastError	128	TestMark7F	166	SrLssKpMonit	204	ETAtanVqVd
15	VuvFdbk	53	VdsSpdVltFlt	91	VdsPrportnal	129	RWVuOut	167	SrLssKiMonit	205	ETByMtrVDfr
16	VvwFdbk	54	WrEst1	92	VdsintMnitor	130	RWVvOut	168	SLWeKScale	206	VelRef2
17	VqsFdbk	55	MuTestFrqRef	93	MotorVlts	131	RWVwOut	169	SrLssWrAve	207	VelOutput
18	IdsCmd	56	TestFrqRef	94	BusUtil	132	RWuErr	170	SrLssWrCmd	208	TorqEst
19	IqsRatio	57	FluxFltrN_1	95	FieldInitTm	133	RWvErr	171	SLWeKC2Mon	209	TorqEstFltr
20	MulqsRef	58	PrchgDlayCtr	96	IqsLimit	134	RWwErr	172	SLWrKA2Mon	210	FSLamDS
21	IqsCmd	59	PrchTimOutCr	97	VqsCmdMotor	135	RWVuOut2	173	SrLssVdsCmd	211	FSIdsCmd
22	We2	60	PrchPilotCtr	98	We2FieldWeak	136	RWVuOut2	174	SrLssGnMon	212	FsFluxErr
23	VuTd	61	TrqEnableCtr	99	VqsFldWkBase	137	RWVuOut2	175	WsKff	213	FSLamDSCmd
24	VvTd	62	MuTscan1	100	VqsIdsCmd	138	RWPosState	176	WsKffBst	214	FsFluxTmr
25	VwTd	63	ErStatFromCp	101	VqsMaxMotor	139	RWNegState	177	SLQAWeEstAve	215	SrLsVdsOff
26	VuCmd2	64	FlxCurRteOut	102	VqsMaxVbus	140	BusDropVolts	178	SLWeEstErr	216	FSLstIntgl
27	VvCmd2	65	ThetaE	103	CalcPUMtrFlx	141	RecoverVolts	179	SrLssIntMon	217	FSLstWe
28	VwCmd2	66	SinThetaE1	104	FldWkInitTim	142	VdsFdbkFltr	180	SLWePosLmt	218	FSLstWr
29	Kpwm	67	SinThetaE2	105	FluxIdsFfFlt	143	VqsFdbkFltr	181	SLWeNegLmt	219	PwrCalc
30	Vds_cemf	68	SinThetaE3	106	FlxVqsCmdFlt	144	VbusFdbkFltr	182	SLWrScale	220	ThetaELin
31	Vqs_cemf	69	SinThetaE4	107	VqsError	145	VbusMemory	183	SLErrNoCoher	221	PprCntEfcOt
32	VdsCmd2	70	SinThetaE5	108	VqsFluxPI	146	VpEnc0VelFbk	184	SLIntLmtPosM	222	PprCntDfcTh
33	VqsCmd2	71	SinThetaE6	109	VqsIntegral	147	VpEnc1VelFbk	185	SLIntLmtNegM	223	LinPprCnt
34	IdsIntegral	72	ThetaEcor	110	VqsPrportl1	148	VPOpt0VelFbk	186	RsEst	224	ActiveFbk
35	IqsIntegral	73	SinThtaEcor1	111	VqsPrportnl2	149	VPOpt1VelFbk	187	RsEstCosPhi	225	VdsCOMP
36	DcBus	74	SinThtaEcor2	112	DbDuty	150	BitSelect1	188	RsEstFltr	226	VqsCOMP
37	AGnd	75	SinThtaEcor3	113	TestMark70	151	BitSelect2	189	RsEstIqsCmdP	227	S4096 2.5V

545	**MC TP Value** Displays the data selected by Par 544 [MC TP Sel]. This display should only be used if the selected value is integer data. Par 545 [MC TP Value] is a diagnostic tool you can use to view internal drive parameters.	Default: 0 Min/Max: -/+2147483648				32-bit Integer
546	**MC TP Bit** Displays the data selected by Par 544 [MC TP Sel]. This display should only be used if the selected value is bit-enumerated data. Par 546 [MC TP Bit] is a diagnostic tool you can use to view internal drive parameters.	Default: 00000000000000000000000000000000 Min: 00000000000000000000000000000000 Max: 11111111111111111111111111111111				32-bit Boolean
548	**Est Speed Fdbk** Displays estimated motor speed, calculated when the selected feedback is sensorless or when encoderless ridethrough is enabled. A value of 4096 indicates a motor speed equal to the value in Par 4 [Motor NP RPM].	Default: 0 Min/Max: -/+32767				16-bit Integer

No.	Name Description	Values	Linkable	Read-Write	Data Type

550 MC Diag Status
Indicates the status of the MC diagnostic test.

Options	Reserved	Reserved	Reserved	Reserved	Reserved	Reserved	Reserved	PwrDiagFltPt	PM EncOffset	Rot Dir Chk	CommCntEncls	Comm Count	CommParamCal	CommLmEncles	Comm Lm Meas	Comm SigmaLs	Comm Rs Meas	PDgTrWP-VNOn	PDgTrWP-UNOn	PDgTrVP-WNOn	PDgVP-UNOn	PDgUP-WNOn	PDgTrUP-VNOn	PDgTrUNWNOn	PDgTrUPWPOn	Pdiag TrWNOn	Pdiag TrVNOn	Pdiag TrUNOn	Pdiag TrWNOn	Pdiag TrVPOn	Pdiag TrUPOn	Pdg VbusSens
Default	0	0	0	0	0	0	0	0	0	0	0	0	0	0	0	0	0	0	0	0	0	0	0	0	0	0	0	0	0	0	0	0
Bit	31	30	29	28	27	26	25	24	23	22	21	20	19	18	17	16	15	14	13	12	11	10	9	8	7	6	5	4	3	2	1	0

0 = False
1 = True

551 MC Diag Done
Indicates which MC diagnostic tests are complete.

Options	Reserved	Reserved	Reserved	Reserved	Reserved	Reserved	Reserved	PwrDiagFltPt	PM EncOffset	Rot Dir Chk	CommCntEncls	Comm Count	CommParamCal	CommLmEncles	Comm Lm Meas	Comm SigmaLs	Comm Rs Meas	PDgTrWP-VNOn	PDgTrWP-UNOn	PDgTrVP-WNOn	PDgVP-UNOn	UP-WNOn-U	PDgTrUP-VNOn	Ground Fault	Ground Fault	Pdiag TrWNOn	Pdiag TrVNOn	Pdiag TrUNOn	Pdiag TWUNOn	Pdiag TrVPOn	Pdiag TrUPOn	Pdg VbusSens
Default	0	0	0	0	0	0	0	0	0	0	0	0	0	0	0	0	0	0	0	0	0	0	0	0	0	0	0	0	0	0	0	0
Bit	31	30	29	28	27	26	25	24	23	22	21	20	19	18	17	16	15	14	13	12	11	10	9	8	7	6	5	4	3	2	1	0

0 = False
1 = True

552 MC Diag Error 1
Displays the first diagnostic error encountered by the Motor Control (MC). Errors appear in this parameter in the order in which they occurred.

Options	Reserved	Reserved	Reserved	Reserved	Reserved	Reserved	Reserved	Reserved	Reserved	Reserved	Reserved	Reserved	Neg Parametr	Not Rotating	Not Rotating	Reserved	Reserved	W,WP-VNOn-Wcur	WP-UNOn-U,W	VP-WNOn-Wcur	VP-UNOn-Ucur	UP-WNOn-U,W	UP-VNOn-Ucur	Ground Fault	Ground Fault	UP,VPdevShrt	UP,WPdevShrt	VP,WPdevShrt	UN,VNdevShrt	UN,WNdevShrt	VN,WNdevShrt	Vbus Range
Default	0	0	0	0	0	0	0	0	0	0	0	0	0	0	0	0	0	0	0	0	0	0	0	0	0	0	0	0	0	0	0	0
Bit	31	30	29	28	27	26	25	24	23	22	21	20	19	18	17	16	15	14	13	12	11	10	9	8	7	6	5	4	3	2	1	0

0 = False
1 = True

553 MC Diag Error 2
Displays the second diagnostic error encountered by the Motor Control (MC). Errors appear in this parameter in the order in which they occurred.

Options	Reserved	Reserved	Reserved	Reserved	Reserved	Reserved	Reserved	Reserved	Reserved	Reserved	Reserved	Reserved	Reserved	Reserved	Negative Wr	Reserved	Reserved	WP-VNOn-Vvw	WPUN-Vuv,Vvw	VP-WNOn-Vvw	VP-UNOn-Vuv	UPWN-Vuv,Vvw	UP-VNOn-Vuv	Reserved	Reserved	Reserved	Reserved	Reserved	Reserved	Reserved	Reserved	SensOfstRnge
Default	0	0	0	0	0	0	0	0	0	0	0	0	0	0	0	0	0	0	0	0	0	0	0	0	0	0	0	0	0	0	0	0
Bit	31	30	29	28	27	26	25	24	23	22	21	20	19	18	17	16	15	14	13	12	11	10	9	8	7	6	5	4	3	2	1	0

0 = False
1 = True

554 MC Diag Error 3
Displays the third diagnostic error encountered by the Motor Control (MC). Errors appear in this parameter in the order in which they occurred.

Options	Reserved	Reserved	Reserved	Reserved	Reserved	Reserved	Reserved	Reserved	Reserved	Reserved	Reserved	Reserved	Reserved	HP Fault	HP Fault	Reserved	Reserved	Reserved	Reserved	Vvw Volt Flt	Vuv Volt Flt	W Currnt Flt	U Currnt Flt	Reserved	Ground Fault	WNdeviceShrt	VNdeviceShrt	UNdeviceShrt	WPdeviceShrt	VPdeviceShrt	UPdeviceShrt	Vbus Range
Default	0	0	0	0	0	0	0	0	0	0	0	0	0	0	0	0	0	0	0	0	0	0	0	0	0	0	0	0	0	0	0	0
Bit	31	30	29	28	27	26	25	24	23	22	21	20	19	18	17	16	15	14	13	12	11	10	9	8	7	6	5	4	3	2	1	0

0 = False
1 = True

555 MC Status
Indicates status of the Motor Control (MC) Processor and related functions.

Options	Min Vqs	MaxDCBus Vqs	MaxMotor Vqs	Max Vds	Min Vds	SrLssWsLimit	Slip Limit	Regen	Iqs Limit	FldWeakening	Reserved	Reserved	Reserved	Reserved	FluxRatioRef	Command Lim	DC Bus Low	MC Test Mode	PreChrg Req	PWM En	PreChrg Done	Flux En	Torque En	Change Dir	MC CommisFlt	MC CommisRun	MC Fault	MC Ready	BaseBlockReq	TorqueRunReq	Flux Run Req	MC En Req
Default	0	0	0	0	0	0	0	0	0	0	0	0	0	0	0	0	0	0	0	0	0	0	0	0	0	0	0	0	0	0	0	0
Bit	31	30	29	28	27	26	25	24	23	22	21	20	19	18	17	16	15	14	13	12	11	10	9	8	7	6	5	4	3	2	1	0

0 = False
1 = True

600 Integer In00
Displays input word 00 of the controller communication format in integer format. Paired with Par 601 [Real In00], which displays the same data in floating point format.

Default: 0
Min/Max: -/+2147483648

32-bit Integer

No.	Name Description	Values	Linkable	Read-Write	Data Type
601	**Real In00** Displays input word 00 of the controller communication format in floating point format. Paired with Par 600 [Integer In00], which displays the same data in integer format.	Default: 0.0000 Min/Max: -/+2200000000.0000			Real
602	**Integer In01** Displays input word 01 of the controller communication format in integer format. Paired with Par 603 [Real In01], which displays the same data in floating point format.	Default: 0 Min/Max: -/+2147483648			32-bit Integer
603	**Real In01** Displays input word 01 of the controller communication format in floating point format. Paired with Par 602 [Integer In01], which displays the same data in integer format.	Default: 0.0000 Min/Max: -/+2200000000.0000			Real
604	**Integer In02** Displays input word 02 of the controller communication format in integer format. Paired with Par 605 [Real In02], which displays the same data in floating point format.	Default: 0 Min/Max: -/+2147483648			32-bit Integer
605	**Real In02** Displays input word 02 of the controller communication format in floating point format. Paired with Par 604 [Integer In02], which displays the same data in integer format.	Default: 0.0000 Min/Max: -/+2200000000.0000			Real
606	**Integer In03** Displays input word 03 of the controller communication format in integer format. Paired with Par 607 [Real In03], which displays the same data in floating point format.	Default: 0 Min/Max: -/+2147483648			32-bit Integer
607	**Real In03** Displays input word 03 of the controller communication format in floating point format. Paired with Par 606 [Integer In03], which displays the same data in integer format.	Default: 0.0000 Min/Max: -/+2200000000.0000			Real
608	**Integer In04** Displays input word 04 of the controller communication format in integer format. Paired with Par 609 [Real In04], which displays the same data in floating point format.	Default: 0 Min/Max: -/+2147483648			32-bit Integer
609	**Real In04** Displays input word 04 of the controller communication format in floating point format. Paired with Par 608 [Integer In04], which displays the same data in integer format.	Default: 0.0000 Min/Max: -/+2200000000.0000			Real
610	**Integer In05** Displays input word 05 of the controller communication format in integer format. Paired with Par 611 [Real In05], which displays the same data in floating point format.	Default: 0 Min/Max: -/+2147483648			32-bit Integer
611	**Real In05** Displays input word 05 of the controller communication format in floating point format. Paired with Par 610 [Integer In05], which displays the same data in integer format.	Default: 0.0000 Min/Max: -/+2200000000.0000			Real
612	**Integer In06** Displays input word 06 of the controller communication format in integer format. Paired with Par 613 [Real In06], which displays the same data in floating point format.	Default: 0 Min/Max: -/+2147483648			32-bit Integer
613	**Real In06** Displays input word 06 of the controller communication format in floating point format. Paired with Par 612 [Integer In06], which displays the same data in integer format.	Default: 0.0000 Min/Max: -/+2200000000.0000 Comm Scale: x 1			Real
614	**Integer In07** Displays input word 07 of the controller communication format in integer format. Paired with Par 615 [Real In07], which displays the same data in floating point format.	Default: 0 Min/Max: -/+2147483648 Comm Scale: x 1			32-bit Integer
615	**Real In07** Displays input word 07 of the controller communication format in floating point format. Paired with Par 614 [Integer In07], which displays the same data in integer format.	Default: 0.0000 Min/Max: -/+2200000000.0000			Real
616	**Integer In08** Displays input word 08 of the controller communication format in integer format. Paired with Par 617 [Real In08], which displays the same data in floating point format.	Default: 0 Min/Max: -/+2147483648			32-bit Integer
617	**Real In08** Displays input word 08 of the controller communication format in floating point format. Paired with Par 616 [Integer In08], which displays the same data in integer format.	Default: 0.0000 Min/Max: -/+2200000000.0000			Real
618	**Integer In09** Displays input word 09 of the controller communication format in integer format. Paired with Par 619 [Real In09], which displays the same data in floating point format.	Default: 0 Min/Max: -/+2147483648			32-bit Integer
619	**Real In09** Displays input word 09 of the controller communication format in floating point format. Paired with Par 618 [Integer In09], which displays the same data in integer format.	Default: 0.0000 Min/Max: -/+2200000000.0000			Real
620	**Integer In10** Displays input word 10 of the controller communication format in integer format. Paired with Par 621 [Real In10], which displays the same data in floating point format.	Default: 0 Min/Max: -/+2147483648			32-bit Integer
621	**Real In10** Displays input word 10 of the controller communication format in floating point format. Paired with Par 620 [Integer In10], which displays the same data in integer format.	Default: 0.0000 Min/Max: -/+2200000000.0000			Real
622	**Integer In11** Displays input word 11 of the controller communication format in integer format. Paired with Par 623 [Real In11], which displays the same data in floating point format.	Default: 0 Min/Max: -/+2147483648			32-bit Integer

No.	Name Description	Values	Linkable	Read-Write	Data Type
623	**Real In11** Displays input word 11 of the controller communication format in floating point format. Paired with Par 622 [Integer In11], which displays the same data in integer format.	Default: 0.0000 Min/Max: -/+2200000000.0000			Real
624	**Integer In12** Displays input word 12 of the controller communication format in integer format. Paired with Par 625 [Real In12], which displays the same data in floating point format.	Default: 0 Min/Max: -/+2147483648			32-bit Integer
625	**Real In12** Displays input word 12 of the controller communication format in floating point format. Paired with Par 624 [Integer In12], which displays the same data in integer format.	Default: 0.0000 Min/Max: -/+2200000000.0000			Real
626	**Integer In13** Displays input word 13 of the controller communication format in integer format. Paired with Par 627 [Real In13], which displays the same data in floating point format.	Default: 0 Min/Max: -/+2147483648			32-bit Integer
627	**Real In13** Displays input word 13 of the controller communication format in floating point format. Paired with Par 626 [Integer In13], which displays the same data in integer format.	Default: 0.0000 Min/Max: -/+2200000000.0000			Real
628	**Integer In14** Displays input word 14 of the controller communication format in integer format. Paired with Par 629 [Real In14], which displays the same data in floating point format.	Default: 0 Min/Max: -/+2147483648			32-bit Integer
629	**Real In14** Displays input word 14 of the controller communication format in floating point format. Paired with Par 628 [Integer In14], which displays the same data in integer format.	Default: 0.0000 Min/Max: -/+2200000000.0000			Real
630	**Integer In15** Displays input word 15 of the controller communication format in integer format. Paired with Par 631 [Real In15], which displays the same data in floating point format.	Default: 0 Min/Max: -/+2147483648			32-bit Integer
631	**Real In15** Displays input word 15 of the controller communication format in floating point format. Paired with Par 630 [Integer In15], which displays the same data in integer format.	Default: 0.0000 Min/Max: -/+2200000000.0000			Real
632	**Integer Out00** Displays output word 00 of the controller communication format in integer format. Paired with Par 633 [Real Out00], which displays the same data in floating point format.	Default: 0 Min/Max: -/+2147483648	✓	✓	32-bit Integer
633	**Real Out00** Displays output word 00 of the controller communication format in floating point format. Paired with Par 632 [Integer Out00], which displays the same data in integer format.	Default: 0.0000 Min/Max: -/+2200000000.0000	✓	✓	Real
634	**Integer Out01** Displays output word 01 of the controller communication format in integer format. Paired with Par 635 [Real Out01], which displays the same data in floating point format.	Default: 0 Min/Max: -/+2147483648	✓	✓	32-bit Integer
635	**Real Out01** Displays output word 01 of the controller communication format in floating point format. Paired with Par 634 [Integer Out01], which displays the same data in integer format.	Default: 0.0000 Min/Max: -/+2200000000.0000	✓	✓	Real
636	**Integer Out02** Displays output word 02 of the controller communication format in integer format. Paired with Par 637 [Real Out02], which displays the same data in floating point format.	Default: 0 Min/Max: -/+2147483648	✓	✓	32-bit Integer
637	**Real Out02** Displays output word 02 of the controller communication format in floating point format. Paired with Par 636 [Integer Out02], which displays the same data in integer format.	Default: 0.0000 Min/Max: -/+2200000000.0000	✓	✓	Real
638	**Integer Out03** Displays output word 03 of the controller communication format in integer format. Paired with Par 639 [Real Out03], which displays the same data in floating point format.	Default: 0 Min/Max: -/+2147483648	✓	✓	32-bit Integer
639	**Real Out03** Displays output word 03 of the controller communication format in floating point format. Paired with Par 638 [Integer Out03], which displays the same data in integer format.	Default: 0.0000 Min/Max: -/+2200000000.0000	✓	✓	Real
640	**Integer Out04** Displays output word 04 of the controller communication format in integer format. Paired with Par 641 [Real Out04], which displays the same data in floating point format.	Default: 0 Min/Max: -/+2147483648	✓	✓	32-bit Integer
641	**Real Out04** Displays output word 04 of the controller communication format in floating point format. Paired with Par 640 [Integer Out04], which displays the same data in integer format.	Default: 0.0000 Min/Max: -/+2200000000.0000	✓	✓	Real
642	**Integer Out05** Displays output word 05 of the controller communication format in integer format. Paired with Par 643 [Real Out05], which displays the same data in floating point format.	Default: 0 Min/Max: -/+2147483648	✓	✓	32-bit Integer
643	**Real Out05** Displays output word 05 of the controller communication format in floating point format. Paired with Par 642 [Integer Out05], which displays the same data in integer format.	Default: 0.0000 Min/Max: -/+2200000000.0000	✓	✓	Real
644	**Integer Out06** Displays output word 06 of the controller communication format in integer format. Paired with Par 645 [Real Out06], which displays the same data in floating point format.	Default: 0 Min/Max: -/+2147483648	✓	✓	32-bit Integer

No.	Name Description	Values	Linkable	Read-Write	Data Type
645	**Real Out06** Displays output word 06 of the controller communication format in floating point format. Paired with Par 644 [Integer Out06], which displays the same data in integer format.	Default: 0.0000 Min/Max: -/+2200000000.0000	✓	✓	Real
646	**Integer Out07** Displays output word 07 of the controller communication format in integer format. Paired with Par 647 [Real Out07], which displays the same data in floating point format.	Default: 0 Min/Max: -/+2147483648	✓	✓	32-bit Integer
647	**Real Out07** Displays output word 07 of the controller communication format in floating point format. Paired with Par 646 [Integer Out07], which displays the same data in integer format.	Default: 0.0000 Min/Max: -/+2200000000.0000	✓	✓	Real
648	**Integer Out08** Displays output word 08 of the controller communication format in integer format. Paired with Par 649 [Real Out08], which displays the same data in floating point format.	Default: 0 Min/Max: -/+2147483648	✓	✓	32-bit Integer
649	**Real Out08** Displays output word 08 of the controller communication format in floating point format. Paired with Par 648 [Integer Out08], which displays the same data in integer format.	Default: 0.0000 Min/Max: -/+2200000000.0000	✓	✓	Real
650	**Integer Out09** Displays output word 09 of the controller communication format in integer format. Paired with Par 651 [Real Out09], which displays the same data in floating point format.	Default: 0 Min/Max: -/+2147483648	✓	✓	32-bit Integer
651	**Real Out09** Displays output word 09 of the controller communication format in floating point format. Paired with Par 650 [Integer Out09], which displays the same data in integer format.	Default: 0.0000 Min/Max: -/+2200000000.0000	✓	✓	Real
652	**Integer Out10** Displays output word 10 of the controller communication format in integer format. Paired with Par 653 [Real Out10], which displays the same data in floating point format.	Default: 0 Min/Max: -/+2147483648	✓	✓	32-bit Integer
653	**Real Out10** Displays output word 10 of the controller communication format in floating point format. Paired with Par 652 [Integer Out10], which displays the same data in integer format.	Default: 0.0000 Min/Max: -/+2200000000.0000	✓	✓	Real
654	**Integer Out11** Displays output word 11 of the controller communication format in integer format. Paired with Par 655 [Real Out11], which displays the same data in floating point format.	Default: 0 Min/Max: -/+2147483648 Comm Scale: x16	✓	✓	32-bit Integer
655	**Real Out11** Displays output word 11 of the controller communication format in floating point format. Paired with Par 654 [Integer Out11], which displays the same data in integer format.	Default: 0.0000 Min/Max: -/+2200000000.0000	✓	✓	Real
656	**Integer Out12** Displays output word 12 of the controller communication format in integer format. Paired with Par 657 [Real Out12], which displays the same data in floating point format.	Default: 0 Min/Max: -/+2147483648	✓	✓	32-bit Integer
657	**Real Out12** Displays output word 12 of the controller communication format in floating point format. Paired with Par 656 [Integer Out12], which displays the same data in integer format.	Default: 0.0000 Min/Max: -/+2200000000.0000	✓	✓	Real
658	**Integer Out13** Displays output word 13 of the controller communication format in integer format. Paired with Par 659 [Real Out13], which displays the same data in floating point format.	Default: 0 Min/Max: -/+2147483648	✓	✓	32-bit Integer
659	**Real Out13** Displays output word 13 of the controller communication format in floating point format. Paired with Par 658 [Integer Out13], which displays the same data in integer format.	Default: 0.0000 Min/Max: -/+2200000000.0000	✓	✓	Real
660	**Integer Out14** Displays output word 14 of the controller communication format in integer format. Paired with Par 661 [Real Out14], which displays the same data in floating point format.	Default: 0 Min/Max: -/+2147483648	✓	✓	32-bit Integer
661	**Real Out14** Displays output word 14 of the controller communication format in floating point format. Paired with Par 660 [Integer Out14], which displays the same data in integer format.	Default: 0.0000 Min/Max: -/+2200000000.0000	✓	✓	Real
662	**Integer Out15** Displays output word 15 of the controller communication format in integer format. Paired with Par 663 [Real Out15], which displays the same data in floating point format.	Default: 0 Min/Max: -/+2147483648	✓	✓	32-bit Integer
663	**Real Out15** Displays output word 15 of the controller communication format in floating point format. Paired with Par 662 [Integer Out15], which displays the same data in integer format.	Default: 0.0000 Min/Max: -/+2200000000.0000	✓	✓	Real
664	**Lgx Comm Format** Indicates the Controller to Drive communication format. 16-Velocity Control, 0-Custom Format, 16-Position Control.	Default: 0 "Not Used" Options: 0 "Not Used" 18 "UserDefined" 16 "Velocity" 19 "Motion" 17 "Position" 32 CustmUserDef			

No.	Name Description	Values	Linkable	Read-Write	Data Type
670	**Pwr Strct Mode**	Bit 0: PowerFlex 700S Bit 1: Vacon HiHP			

Options	Not Used	Not Used	Not Used	Not Used	Not Used	Not Used	Not Used	Not Used	Not Used	Not Used	Not Used	Not Used	Not Used	Star Coupler	Hi Pwr Strct	Lo PwrStrct
Default	0	0	0	0	0	0	0	0	0	0	0	0	0	0	0	0
Bit	15	14	13	12	11	10	9	8	7	6	5	4	3	2	1	0

0 = False
1 = True

671	**HiHP Drive Fault**

Options	Not Used	Not Used	Not Used	Not Used	Not Used	EE Incompati	HW Incompati	Prchrg cntct	uPrc Wtchdg	Drive OvrLd	FAN Alarm	VBus Wtchdg	VBus CRC Err	VBus Lnk Lst	VBus Com Dly	AC Inpt Lss
Default	0	0	0	0	0	0	0	0	0	0	0	0	0	0	0	0
Bit	15	14	13	12	11	10	9	8	7	6	5	4	3	2	1	0

0 = False
1 = True

No.	Name Description	Values	Linkable	Read-Write	Data Type
672	**HiHP GndFlt Cur** Determines the current level for the ground fault detection. Note: The default value was changed from 125A to 13.05A and the maximum value was changed from 500A to 200A for firmware version 2.07.	Units: Amps Default: 13.0500 Min/Max: 10.0000/200.0000		✓	
673	**HiHP GndFlt Dly** Determines the time delay for the ground fault detection. Note: The default value for this parameter changed from 1 ms to 200 ms for firmware version 2.07.	Units: mSec Default: 200 Min/Max: 20/400		✓	
691	**DPI Ref Select** Selects which DPI port can provide a reference to the drive.	Default: 1 "Local HIM" Options: 1 "Local HIM" 4 "Reserved" 2 "Ext DPI Conn" 5 "Int DPI Comm" 3 "Aux DPI Conn"			
692	**DPI Baud Rate** Sets the baud rate for attached drive peripherals. Reset the drive for the change to take effect.	Default: Val 0 500K Options: Val 0 500K			
693	**Logic Mask** Determines which adapters can control the drive.				

Options	Undefined	Undefined	Undefined	Undefined	Undefined	Undefined	Undefined	Undefined	DriveLogix	Reserved	Int DPI Conn	Reserved	Aux DPI Conn	Ext DPI Conn	Local HIM	Terminal Blk
Default	0	0	0	0	0	0	0	0	1	1	1	1	1	1	1	1
Bit	15	14	13	12	11	10	9	8	7	6	5	4	3	2	1	0

0 = False
1 = True

694	**Start Mask** Controls which adapters can issue start commands.

Options	Undefined	Undefined	Undefined	Undefined	Undefined	Undefined	Undefined	Undefined	DriveLogix	Reserved	Int DPI Conn	Reserved	Aux DPI Conn	Ext DPI Conn	Local HIM	Terminal Blk
Default	0	0	0	0	0	0	0	0	1	1	1	1	1	1	1	1
Bit	15	14	13	12	11	10	9	8	7	6	5	4	3	2	1	0

0 = False
1 = True

695	**Jog Mask** Controls which adapters can issue jog commands.

Options	Undefined	Undefined	Undefined	Undefined	Undefined	Undefined	Undefined	Undefined	DriveLogix	Reserved	Int DPI Conn	Reserved	Aux DPI Conn	Ext DPI Conn	Local HIM	Terminal Blk
Default	0	0	0	0	0	0	0	0	1	1	1	1	1	1	1	1
Bit	15	14	13	12	11	10	9	8	7	6	5	4	3	2	1	0

0 = False
1 = True

No.	Name Description	Values	Linkable	Read-Write	Data Type
696	**Direction Mask** Controls which adapters can issue forward/reverse direction commands.				

Options	Undefined	Undefined	Undefined	Undefined	Undefined	Undefined	Undefined	Undefined	DriveLogix	Reserved	Int DPI Conn	Reserved	Aux DPI Conn	Ext DPI Conn	Local HIM	Terminal Blk
Default	0	0	0	0	0	0	0	0	1	1	1	1	1	1	1	1
Bit	15	14	13	12	11	10	9	8	7	6	5	4	3	2	1	0

0 = False
1 = True

697	**Fault Clr Mask** Controls which adapters can clear a fault.				

Options	Undefined	Undefined	Undefined	Undefined	Undefined	Undefined	Undefined	Undefined	DriveLogix	Reserved	Int DPI Conn	Reserved	Aux DPI Conn	Ext DPI Conn	Local HIM	Terminal Blk
Default	0	0	0	0	0	0	0	0	1	1	1	1	1	1	1	1
Bit	15	14	13	12	11	10	9	8	7	6	5	4	3	2	1	0

0 = False
1 = True

700	**Stop Owner** Indicates which adapters that are presently issuing a valid stop command.				

Options	Undefined	Undefined	Undefined	Undefined	Undefined	Undefined	Undefined	Undefined	DriveLogix	Reserved	Int DPI Conn	Reserved	Aux DPI Conn	Ext DPI Conn	Local HIM	Terminal Blk
Default	0	0	0	0	0	0	0	0	0	0	0	0	0	0	0	0
Bit	15	14	13	12	11	10	9	8	7	6	5	4	3	2	1	0

0 = False
1 = True

701	**Start Owner** Indicates which adapters that are presently issuing a valid start command.				

Options	Undefined	Undefined	Undefined	Undefined	Undefined	Undefined	Undefined	Undefined	DriveLogix	Reserved	Int DPI Conn	Reserved	Aux DPI Conn	Ext DPI Conn	Local HIM	Terminal Blk
Default	0	0	0	0	0	0	0	0	0	0	0	0	0	0	0	0
Bit	15	14	13	12	11	10	9	8	7	6	5	4	3	2	1	0

0 = False
1 = True

702	**Jog Owner** Indicates which adapters that are presently issuing a valid jog command.				

Options	Undefined	Undefined	Undefined	Undefined	Undefined	Undefined	Undefined	Undefined	DriveLogix	Reserved	Int DPI Conn	Reserved	Aux DPI Conn	Ext DPI Conn	Local HIM	Terminal Blk
Default	0	0	0	0	0	0	0	0	0	0	0	0	0	0	0	0
Bit	15	14	13	12	11	10	9	8	7	6	5	4	3	2	1	0

0 = False
1 = True

703	**Direction Owner** Indicates which adapter is currently has exclusive control of direction changes.				

Options	Undefined	Undefined	Undefined	Undefined	Undefined	Undefined	Undefined	Undefined	DriveLogix	Reserved	Int DPI Conn	Reserved	Aux DPI Conn	Ext DPI Conn	Local HIM	Terminal Blk
Default	0	0	0	0	0	0	0	0	0	0	0	0	0	0	0	0
Bit	15	14	13	12	11	10	9	8	7	6	5	4	3	2	1	0

0 = False
1 = True

No.	Name Description	Values	Linkable	Read-Write	Data Type
704	**Fault Clr Owner** Indicates which adapter is currently clearing a fault.				

Options	Undefined	Undefined	Undefined	Undefined	Undefined	Undefined	Undefined	Undefined	DriveLogix	Reserved	Int DPI Conn	Reserved	Aux DPI Conn	Ext DPI Conn	Local HIM	Terminal Blk
Default	0	0	0	0	0	0	0	0	0	0	0	0	0	0	0	0
Bit	15	14	13	12	11	10	9	8	7	6	5	4	3	2	1	0

0 = False
1 = True

No.	Name Description	Values	Linkable	Read-Write	Data Type
707	**Data In A1 Int** Link A Word 1 (Integer) - Parameter number whose value will be written from a communications device data table. Parameters that can only be changed while the drive is stopped cannot be used as Datalink inputs. Entering a parameter of this type will "Disable" the link. Refer to the manual that came with your communications option for datalink information.	Default: 0 Min/Max: -/+2147483648			32-bit Integer
708	**Data In A1 Real** Link A Word 1 (Real or Floating Point) - Parameters that can only be changed while the drive is stopped cannot be used as Datalink inputs. Entering a parameter of this type will "Disable" the link. Refer to the manual that came with your communications option for datalink information.	Default: 0.0000 Min/Max: -/+2200000000.0000			Real
709	**Data In A2 Int** Link A Word 2 (Integer) - Parameter number whose value will be written from a communications device data table. Parameters that can only be changed while the drive is stopped cannot be used as Datalink inputs. Entering a parameter of this type will "Disable" the link. Refer to the manual that came with your communications option for datalink information.	Default: 0 Min/Max: -/+2147483648			32-bit Integer
710	**Data In A2 Real** Link A Word 2 (Real or Floating Point) - Parameters that can only be changed while the drive is stopped cannot be used as Datalink inputs. Entering a parameter of this type will "Disable" the link. Refer to the manual that came with your communications option for datalink information.	Default: 0.0000 Min/Max: -/+2200000000.0000			Real
711	**Data In B1 Int** Link B Word 1 (Integer) - Parameter number whose value will be written from a communications device data table. Parameters that can only be changed while the drive is stopped cannot be used as Datalink inputs. Entering a parameter of this type will "Disable" the link. Refer to the manual that came with your communications option for datalink information.	Default: 0 Min/Max: -/+2147483648			32-bit Integer
712	**Data In B1 Real** Link B Word 1 (Real or Floating Point) - Parameters that can only be changed while the drive is stopped cannot be used as Datalink inputs. Entering a parameter of this type will "Disable" the link. Refer to the manual that came with your communications option for datalink information.	Default: 0.0000 Min/Max: -/+2200000000.0000			Real
713	**Data In B2 Int** Link B Word 2 (Integer) - Parameter number whose value will be written from a communications device data table. Parameters that can only be changed while the drive is stopped cannot be used as Datalink inputs. Entering a parameter of this type will "Disable" the link. Refer to the manual that came with your communications option for datalink information.	Default: 0 Min/Max: -/+2147483648			32-bit Integer
714	**Data In B2 Real** Link B Word 2 (Real or Floating Point) - Parameters that can only be changed while the drive is stopped cannot be used as Datalink inputs. Entering a parameter of this type will "Disable" the link. Refer to the manual that came with your communications option for datalink information.	Default: 0.0000 Min/Max: -/+2200000000.0000			Real
715	**Data In C1 Int** Link C Word 1 (Integer) - Parameter number whose value will be written from a communications device data table. Parameters that can only be changed while the drive is stopped cannot be used as Datalink inputs. Entering a parameter of this type will "Disable" the link. Refer to the manual that came with your communications option for datalink information.	Default: 0 Min/Max: -/+2147483648			32-bit Integer
716	**Data In C1 Real** Link C Word 1 (Real or Floating Point) - Parameters that can only be changed while the drive is stopped cannot be used as Datalink inputs. Entering a parameter of this type will "Disable" the link. Refer to the manual that came with your communications option for datalink information.	Default: 0.0000 Min/ Max: -/+2200000000.0000			Real

No.	Name Description	Values	Linkable	Read-Write	Data Type
717	**Data In C2 Int** Link C Word 2 (Integer) - Parameter number whose value will be written from a communications device data table. Parameters that can only be changed while the drive is stopped cannot be used as Datalink inputs. Entering a parameter of this type will "Disable" the link. Refer to the manual that came with your communications option for datalink information.	Default: 0 Min/Max: -/+2147483648			32-bit Integer
718	**Data In C2 Real** Link C Word 2 (Real or Floating Point) - Parameters that can only be changed while the drive is stopped cannot be used as Datalink inputs. Entering a parameter of this type will "Disable" the link. Refer to the manual that came with your communications option for datalink information.	Default: 0.0000 Min/Max: -/+2200000000.0000			Real
719	**Data In D1 Int** Link D Word 1 (Integer) - Parameter number whose value will be written from a communications device data table. Parameters that can only be changed while the drive is stopped cannot be used as Datalink inputs. Entering a parameter of this type will "Disable" the link. Refer to the manual that came with your communications option for datalink information.	Default: 0 Min/Max: -/+2147483648			32-bit Integer
720	**Data In D1 Real** Link D Word 1 (Real or Floating Point) - Parameters that can only be changed while the drive is stopped cannot be used as Datalink inputs. Entering a parameter of this type will "Disable" the link. Refer to the manual that came with your communications option for datalink information.	Default: 0.0000 Min/Max: -/+2200000000.0000			Real
721	**Data In D2 Int** Link D Word 2 (Integer) - Parameter number whose value will be written from a communications device data table. Parameters that can only be changed while the drive is stopped cannot be used as Datalink inputs. Entering a parameter of this type will "Disable" the link. Refer to the manual that came with your communications option for datalink information.	Default: 0 Min/Max: -/+2147483648			32-bit Integer
722	**Data In D2 Real** Link D Word 2 (Real or Floating Point) - Parameters that can only be changed while the drive is stopped cannot be used as Datalink inputs. Entering a parameter of this type will "Disable" the link. Refer to the manual that came with your communications option for datalink information.	Default: 0.0000 Min/Max: -/+2200000000.0000			Real
723	**DLink OutDataTyp** Set bits to configure each Datalink output word for real (floating point) data transfer. Reset bits to configure each Datalink output word for integer data transfer.				
724	**Data Out A1 Int** Link A Word 1 (Integer) - Parameter number whose value will be written to a communications device data table.	Default: 0 Min/Max: -/+2147483648	✓	✓	32-bit Integer
725	**Data Out A1 Real** Link A Word 1 (Real or Floating Point) - Parameter number whose value will be written to a communications device data table.	Default: 0.0000 Min/Max: -/+2200000000.0000	✓	✓	Real
726	**Data Out A2 Int** Link A Word 2 (Integer) - Parameter number whose value will be written to a communications device data table.	Default: 0 Min/Max: -/+2147483648	✓	✓	32-bit Integer
727	**Data Out A2 Real** Link A Word 2 (Real or Floating Point) - Parameter number whose value will be written to a communications device data table.	Default: 0.0000 Min/Max: -/+2200000000.0000	✓	✓	Real
728	**Data Out B1 Int** Link B Word 1 (Integer) - Parameter number whose value will be written to a communications device data table.	Default: 0 Min/Max: -/+2147483648	✓	✓	32-bit Integer
729	**Data Out B1 Real** Link B Word 1 (Real or Floating Point) - Parameter number whose value will be written to a communications device data table.	Default: 0.0000 Min/Max: -/+2200000000.0000	✓	✓	Real
730	**Data Out B2 Int** Link B Word 2 (Integer) - Parameter number whose value will be written to a communications device data table.	Default: 0 Min/Max: -/+2147483648	✓	✓	32-bit Integer
731	**Data Out B2 Real** Link B Word 2 (Real or Floating Point) - Parameter number whose value will be written to a communications device data table.	Default: 0.0000 Min/Max: -/+2200000000.0000	✓	✓	Real
732	**Data Out C1 Int** Link C Word 1 (Integer) - Parameter number whose value will be written to a communications device data table.	Default: 0 Min/Max: -/+2147483648	✓	✓	32-bit Integer

Options	Reserved	Reserved	Reserved	Reserved	Reserved	Reserved	Reserved	Reserved	D2 Out Real	D1 Out Real	C2 Out Real	C1 Out Real	B2 Out Real	B1 Out Real	A2 Out Real	A1 Out Real
Default	0	0	0	0	0	0	0	0	0	0	0	0	0	0	0	0
Bit	15	14	13	12	11	10	9	8	7	6	5	4	3	2	1	0

0 = False
1 = True

No.	Name Description	Values	Linkable	Read-Write	Data Type
733	**Data Out C1 Real** Link C Word 1 (Real or Floating Point) - Parameter number whose value will be written to a communications device data table.	Default: 0.0000 Min/Max: -/+2200000000.0000	✓	✓	Real
734	**Data Out C2 Int** Link C Word 2 (Integer) - Parameter number whose value will be written to a communications device data table.	Default: 0 Min/Max: -/+2147483648	✓	✓	32-bit Integer
735	**Data Out C2 Real** Link C Word 2 (Real or Floating Point) - Parameter number whose value will be written to a communications device data table.	Default: 0.0000 Min/Max: -/+2200000000.0000	✓	✓	Real
736	**Data Out D1 Int** Link D Word 1 (Integer) - Parameter number whose value will be written to a communications device data table.	Default: 0 Min/Max: -/+2147483648	✓	✓	32-bit Integer
737	**Data Out D1 Real** Link D Word 1 (Real or Floating Point) - Parameter number whose value will be written to a communications device data table.	Default: 0.0000 Min/Max: -/+2200000000.0000	✓	✓	Real
738	**Data Out D2 Int** Link D Word 2 (Integer) - Parameter number whose value will be written to a communications device data table.	Default: 0 Min/Max: -/+2147483648 Comm Scale: x 1	✓	✓	32-bit Integer
739	**Data Out D2 Real** Link D Word 2 (Real or Floating Point) - Parameter number whose value will be written to a communications device data table.	Default: 0.0000 Min/Max: -/+2200000000.0000	✓	✓	Real

740 Position Control

Set bits to enable various position control functions.

- Setting bit 1 [Speed Out En] enables position regulator output at Par 318 [Posit Spd Output].
- Setting bit 2 [Integ En] enables integrator operation. Resetting it resets the integrator.
- Setting bit 3 [Integ Hold] holds the integrator in the present state.
- Setting bit 4 [X Offset Pol] reverses polarity of offset parameters.
- Setting bit 5 [XOffset ReRef] permits changing the value of position offsets without changing actual position. Resetting it makes the position offset relative to the re-referenced value or the latched value upon enable if re-reference was not performed.
- Bit 6 [ActPosit Rst] is only operational when Bit 8 [Xzero Preset] is off. When bit 6 [ActPosit Rst] is set, Pars 744 [PositRef EGR Out], 747 [Position Cmmd], 763 [Act Motor Posit] and 765 [Posit Actl Load] will be set to the value of Par 762 [Mtr Posit Fdbk] upon drive enable. When bit 6 [ActPosit Rst] is cleared, the above four parameters are set to a value of the position reference selected by Par 743 [Aux Posit Ref].
- Setting bit 7 [AbsoluteMode] puts the position regulator in Absolute mode.
- Setting bit 8 [Xzero Preset] presets Pars 744 [PositRef EGR Out], 747 [Position Cmmd], 763 [Act Motor Posit] and 765 [Posit Actl Load] to the value in Par 762 [Mtr Posit Fdbk] minus Par 757 [Abs Posit Offset] upon drive enable.
- Setting bit 10 [Pt-Pt ReRef] enables setting or changing Par 758 [Pt-Pt Posit Ref] without changing actual position.
- Setting bit 16 [X Watch1 En] enables position Watch 1. Resetting it clears Par 741 [Position Status] bit 8 [Posit Watch1].
- Setting bit 17 [X Watch1 Dir] causes Position Watch 1 output to be set when Par 763 [Act Motor Posit] is greater than Par 780 [PositDtct1 Stpt]. Re-setting bit 17 [X Watch1 Dir] causes Position Watch 1 output to be set when Par 763 [Act Motor Posit] is less than Par 780 [PositDtct1 Stpt].
- Setting bit 18 [X Watch2 En] enables position Watch 2. Resetting it clears Par 741 [Position Status] bit 9 [Posit Watch2].
- Setting bit 19 [X Watch2 Dir] causes Position Watch 2 output to be set when Par 763 [Act Motor Posit] is greater than Par 781 [PositDtct2 Stpt]. Re-setting bit 19 [X Watch2 Dir] causes Position Watch 2 output to be set when Par 763 [Act Motor Posit] is less than Par 781 [PositDtct2 Stpt].

Options	Reserved	Reserved	Reserved	Reserved	Reserved	Reserved	Reserved	Reserved	Reserved	Reserved	Reserved	Reserved	X Watch2 Dir	X Watch2 En	X Watch1 Dir	X Watch1 En	Reserved	Reserved	Reserved	Reserved	Reserved	Pt-Pt ReRef	Reserved	Xzero Preset	AbsoluteMode	ActPosit Rst	XOffset ReRef	X Offset Pol	Integ Hold	Integ En	Speed Out En	Reserved	
Default	0	0	0	0	0	0	0	0	0	0	0	0	1	0	1	0	0	0	0	0	0	0	0	1	0	0	0	0	0	0	1	0	0 = False
Bit	31	30	29	28	27	26	25	24	23	22	21	20	19	18	17	16	15	14	13	12	11	10	9	8	7	6	5	4	3	2	1	0	1 = True

741 Position Status

Indicates status of position control algorithms.

- Bit 0 [X IGain LLim] indicates the position integrator is at the lower limit.
- Bit 1 [X IGain HLim] indicates the position integrator is at the high limit.
- Bit 2 [X Spd LLim] indicates the position regulator output at the low limit.
- Bit 3[X Spd HLim] indicates the position regulator output is at the high limit.
- Bit 4 [PtPtRRef Act] TBD.
- Bit 5 [XOffRRef Act] TBD.
- Bit 7 [Regulator On] indicates position regulator is active.
- Bit 8 [Posit Watch1] indicates Position Watch 1 has detected motor position equal to its setpoint, from the proper direction.
- Bit 9 [Posit Watch2] indicates Position Watch 2 has detected motor position equal to its setpoint, from the proper direction.
- Bit 10 [In Position] indicates Par 769 [Position Error] is within the position deadband specified by parameter 782 [In Posit BW].

Options	Reserved	Reserved	Reserved	Reserved	Reserved	Reserved	Reserved	Reserved	Reserved	Reserved	Reserved	Reserved	Reserved	Reserved	Reserved	Reserved	Reserved	Reserved	Reserved	Reserved	Reserved	In Position	Posit Watch2	Posit Watch1	Regulator On	Reserved	XOffRRef Act	PtPtRRef Ac	X Spd HLim	X Spd LLim	X IGain HLim	X IGain LLim	
Default	0	0	0	0	0	0	0	0	0	0	0	0	1	0	1	0	0	0	0	0	0	0	0	1	0	0	0	0	0	0	1	0	0 = False
Bit	31	30	29	28	27	26	25	24	23	22	21	20	19	18	17	16	15	14	13	12	11	10	9	8	7	6	5	4	3	2	1	0	1 = True

No.	Name Description	Values	Linkable	Read-Write	Data Type
742	**Posit Ref Sel** Enter a value to select the position mode and corresponding reference.	Default: 1 "AuxPosit Ref" Options: 0 "Interpolate" 2 "Pt to Pt" 1 "AuxPosit Ref"			
743	**Aux Posit Ref** Supplies position reference to the position regulator when selected by Par 742 [Posit Ref Sel]. This input is designed to be linked to a position count accumulator such as a virtual encoder or hardware accumulator.	Default: 0 Min/Max: -/+2147483648	✓	✓	32-bit Integer
744	**PositRef EGR Out** Accumulated output of the position reference Electronic Gear Ratio (EGR). When the position regulator is not enabled, this parameter is initialized to Par 762 [Mtr Posit Fdbk] or to the selected position reference as determined by Par 740 [Position Control] bit 6 [ActPosit Rst].	Default: 0 Min/Max: -/+2147483648			32-bit Integer
745	**PositRef EGR Mul** An integer value in the numerator of the EGR function that is precision multiplied by the selected position reference. A negative value will effect a change in polarity.	Default: 1 Min/Max: -/+2000000	✓	✓	32-bit Integer
746	**PositRef EGR Div** An integer value in the denominator of the EGR function that divides the product of the numerator of the EGR function and the selected position reference. Remainders are accumulated and not lost.	Default: 1 Min/Max: 1/2000000			32-bit Integer
747	**Position Cmmd** Final accumulated command to the position regulator. When the position regulator is not enabled, this parameter is initialized to Par 762 [Mtr Posit Fdbk] or to the selected position reference as determined by Par 740 [Position Control] bit 6 [ActPosit Rst]. Thereafter, its value will reflect the result of reference and offset changes.	Default: 0 Min/Max: -/+2147483648			32-bit Integer
748	**CoarsePosit Trgt** Input to the interpolator. This is a course position target reference.	Default: 0 Min/Max: -/+2147483648	✓		DWord
749	**Interp Position** Input to the interpolator. This is a course position target reference.	Default: 0 Min/Max: -/+2147483648			DWord
750	**Course Spd Trgt** Input to the interpolator. This is a course speed target reference.	Default: 0 Min/Max: -/+2200000000.0000		✓	Real
751	**Interp Speed** Output from the interpolator. This is a fine speed target reference. Interpolated value of Par 750 [Course Spd Trgt] if available, or the first derivative of Par 748 [CoursePosit Trgt] if not available.	Default: 0 Min/Max: -/+8.0000			Real
752	**Interp AccelRate** Output from interpolator. This is a fine acceleration rate. First derivative of Par 750 [Course Spd Trgt] if available, or zero (0) if not available.	Default: 0 Min/Max: -/+8.0000			Real
753	**Posit Offset 1** Supplies a position reference offset, which is summed after the EGR and used to phase trim position reference. A step in the offset position will be internally rate limited and added to the selected reference position. The rate of correction is set by Par 755 [Posit Offset Spd]. The initial value of this parameter is latched upon position enable without causing a change in reference. Subsequent changes to the value will be relative to the latched value. See Par 740 [Position Control] bit 5 [XOffset ReRef] for re-referencing the offsets.	Default: 0 Min/Max: -/+2147483648	✓	✓	32-bit Integer
754	**Posit Offset 2** Supplies another position reference offset, which is summed directly with Par 753 [Posit Offset 1]. Used to trim the phase of the selected position reference. Position offset will be internally rate limited to a velocity set by Par 755 [Posit Offset Spd].	Default: 0 Min/Max: -/+2147483648	✓	✓	32-bit Integer
755	**Posit Offset Spd** Sets the speed of position offset. A position offset command will not exceed this speed. The actual speed of offset is limited to a maximum value of 1/(inertia * pos gain) so as not to cause a torque pulse greater than 1 per unit. The speed will change exponentially.	Units: RPM Default: 176.4000 Min/Max: -/+14112.0000 Comm Scale: Par 4 [Motor NP RPM] = 1.0	✓	✓	Real
756	**X Offst SpdFilt** Displays the output of a first order filter whose time response is shaped specifically to provide an output that represents the actual speed of offset correction. It may be used as feed forward into speed reference to secure minimal position error during changes to offset.	Units: RPM Default: 0.0000 Min/Max: -/+14112.0000 Comm Scale: Par 4 [Motor NP RPM] = 1.0			Real

No.	Name Description	Values	Linkable	Read-Write	Data Type
757	**Abs Posit Offset** Provides an offset to absolute position. Setting Par 740 [Position Control], bit 8 [Xzero Preset] presets Pars 744 [PositRef EGR Out], 747 [Position Cmmd], 763 [Act Motor Posit] and 765 [Posit Actl Load] with the value in Par 762 [Mtr Posit Fdbk] minus Par 757 [Abs Posit Offset] upon drive enable. 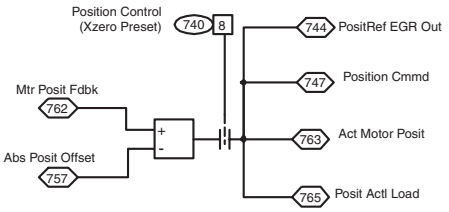 	Default: 0 Min/Max: -/+2147483648	✓	✓	32-bit Integer
758	**Pt-Pt Posit Ref** Provides position reference to the point to point position regulator, when the value in Par 742 [Posit Ref Sel] equals 2 “Pt to Pt”. The initial value is latched upon position enable without causing movement. Subsequent changes to reference are relative to the latched position unless the position is re-referenced by Par 740 [Position Control], bit 10 [Pt-Pt ReRef]. Position moves may be made within the limits of +/- 31 bits. Point to point reference may be changed, and even reversed, during a move.	Default: 0 Min/Max: -/+2147483648	✓	✓	32-bit Integer
759	**Pt-Pt Accel Time** Acceleration time (sec) from zero to base speed, active only in point to point mode. Acceleration to a relatively low speed may be exponential.	Units: Sec Default: 10.0000 Min/Max: 0.1000/6553.5000	✓	✓	Real
760	**Pt-Pt Decel Time** Deceleration time (sec) from base speed to zero, active only in point to point mode. Some tailing can be expected at the end of a move as the drive comes into command position. It is left to the user to select a time that does not place the drive in current or torque limit. Deceleration from relatively low speed may be exponential.	Units: Sec Default: 10.0000 Min/Max: 0.1000/6553.5000	✓	✓	Real
761	**Pt-Pt Filt BW** Sets the bandwidth of a low pass filter which affects smoothness at the start of deceleration in the point to point mode. A high filter bandwidth will produce a more square deceleration torque, one with a higher level of jerk. Typical values range from 5 to 100 (rad/sec). A zero value will bypass the filter. Tail-out is influenced mainly by Par 768 [PositReg P Gain].	Units: R/S Default: 25.0000 Min/Max: 0.0000/500.0000	✓	✓	Real
762	**Mtr Posit Fdbk** Displays the accumulated pulse count of the primary feedback device as a 32 bit integer. The primary feedback device is selected by Par 222 [Motor Fdbk Sel].	Default: 0 Min/Max: -/+2147483648			32-bit Integer
763	**Act Motor Posit** Displays the accumulated motor position as a 32 bit integer. It tracks Par 762 [Mtr Posit Fdbk]. When the position regulator is not enabled, this parameter is initialized to Par 762 [Mtr Posit Fdbk] or to the selected position reference as determined by Par 740 [Position Control] bit 6 [ActPosit Rst].	Default: 0 Min/Max: -/+2147483648			32-bit Integer
764	**Posit Load Fdbk** Tracks the load position as a 32 bit integer. When a gear box connects the load to the motor, Par 766 [Posit FB EGR Mul] and Par 767 [Posit FB EGR Div] must be set to account for the gear ratio. Set Par 766 [Posit FB EGR Mul] equal to Par 767 [Posit FB EGR Div] if the load is directly connected to the motor.	Default: 0 Min/Max: -/+2147483648	✓	✓	32-bit Integer
765	**Posit Actl Load** Holds the accumulated output of the Load Gear Ratio as a 32 bit integer and forms the primary feedback for the position regulator integral channel. It is very important that the Load Gear Ratio be precisely set, such that the delta pulse count of one motor revolution equals the delta pulse count of this parameter. When the position regulator is not enabled, this parameter is initialized to Par 762 [Mtr Posit Fdbk] or to the selected position reference as determined by Par 740 [Position Control] bit 6 [ActPosit Rst].	Default: 0 Mi/Max: -/+2147483648			32-bit Integer
766	**Posit FB EGR Mul** A 32 bit integer in the numerator of the load Electronic Gear Ratio function. It is multiplied by Par 764 [Posit Load Fdbk] and divided by Par 767 [Posit FB EGR Div] to reflect the load pulse count to the motor (effectively removing the gear box ratio). The accumulated position values of Par 763 [Act Motor Posit] and Par 765 [Posit Actl Load] will be equal if the ratio is set properly. There may be some difference due to lost motion in the gear train, but there should not be an accumulated difference. It is often necessary to count gear teeth as gear box manufacturers often approximate exact ratios with decimal numbers. Enter a negative value in the numerator to account for reversed motor rotation.	Default: 1 Min/Max: -/+1000000	✓	✓	32-bit Integer
767	**Posit FB EGR Div** This is a 32 bit integer that forms the denominator of the load Electronic Gear Ratio function.	Default: 1 Min/Max: 1/2000000			32-bit Integer

No.	Name Description	Values	Linkable	Read-Write	Data Type
768	**PositReg P Gain** Sets position regulator gain as measured from position error to speed reference. The gain number is identically equal to position regulator bandwidth in rad/sec. For example: A gain of 10 means that a per unit position error of 0.1 sec. will effect a 1.0 pu speed change (1 per unit position error is the distance traveled in 1 sec. at base motor speed). The maximum value of this parameter is typically 1/3 of the speed bandwidth (rad/sec) but may be set considerably higher with careful tuning of the speed regulator output lead/lag filter.	Units: R/S Default: 4.0000 Min/Max: 0.0000/200.0000	v	✓	Real
769	**Position Error** Actual position error in motor pulse counts. When the position regulator is not enabled, this 32 bit integer register is initialized to zero. When the position regulator is enabled, this parameter contains the running value of position error, often referred to as “following error”.	Default: 0 Min/Max: -/+2147483648			32-bit Integer
770	**PositReg Integ** Sets position regulator integral gain as measured from position error to velocity reference. It has gain units of (per unit velocity/sec) / (per unit position) and is unit compatible with Par 768 [PositReg P Gain]. An integral gain of 25 means that a per unit position error of 0.1 sec will effect a 2.5 pu speed change per sec. A typical maximum value is _*[PositReg P Gain]2. Note: 1 per unit position is the distance traveled in 1 sec. at base motor speed.	Units: /S2 Default: 4.0000 Min/Max: 0.0000/1000.0000 Comm Scale: x 1	✓	✓	Real
771	**PositReg Droop** Position Droop limits the low frequency gain of the position regulators integral channel to a value of (1/droop). It provides a means to fine tune the stability for load mounted feedback devices where lost motion may cause a problem. Typically, position droop will have a value that is less than (1/position gain), perhaps even zero for tightly coupled loads. Position droop has a gain value of (per unit position) / (per unit speed). Note: 1 per unit position is the distance traveled in 1 sec. at base motor speed.	Default: 0.0000 Min/Max: 0.0000/0.2500	✓	✓	Real
772	**XReg Integ LoLim** The negative limit of the position integrator.	Units: RPM Default: -176.4000 Min/Max: -14112.0000/0.0000 Comm Scale: Par 4 [Motor NP RPM] = 1.0	✓	✓	Real
773	**XReg Integ HiLim** The positive limit of the position integrator.	Units: RPM Default: 176.4000 Min/Max: 0.0000/14112.0000 Comm Scale: Par 4 [Motor NP RPM] = 1.0	✓	✓	Real
774	**XReg Integ Out** The output of the position regulator integral channel after application of the limits. This output is set to zero if the integral gain is set to zero or the integrator is not enabled.	Units: RPM Default: 0 Min/Max: -/+14112.0000 Comm Scale: Par 4 [Motor NP RPM] = 1.0			Real
775	**XReg Spd LoLim** The negative limit of total position regulator output. Point to point mode uses this parameter to set the reverse speed reference.	Units: RPM Default: -176.4000 Min/Max: -14112.0000/0.0000 Comm Scale: Par 4 [Motor NP RPM] = 1.0	✓	✓	Real
776	**XReg Spd HiLim** The positive limit of total position regulator output. Point to point mode uses this parameter to set the forward speed reference.	Units: RPM Default: 176.4000 Min/Max: 0.0000/14112.0000 Comm Scale: Par 4 [Motor NP RPM] = 1.0	✓	✓	Real
777	**Posit TP Select** Enter or write a value to select position regulator data displayed in Par 778 [Posit TP Data Int] and Par 779 [Posit TP DataReal].	Default: 0 “Zero” Options: 0 “Zero”; 1 “del Xos Vout”; 2 “del Xcmd”; 3 “del Act Load”; 4 “del Act Mtr”; 5 “Integ Error”; 6 “Xprop Out”; 7 “Reserved”; 8 “PreLim Xvout”; 9 “Limiter Out”; 10 “Ref EGR In”; 11 “OffsetSpdLim”; 12 “PtoP SpdLim”; 13 “Sec per Edge”; 14 “Edge per Sec”; 15 “Ratio Guess”; 16 “Sync Count”			
778	**PositTP Data Int** Displays the data selected by Par 777 [Posit TP Select]. This display should only be used if the selected value is integer data.	Default: 0 Min/Max: -/+2147483648			32-bit Integer
779	**PositTP DataReal** Displays the data selected by Par 777 [Posit TP Select] in RPM. This display should only be used if the selected value is floating point data.	Units: RPM Default: 0.0000 Min/Max: -/+3.8880799961088.0000 Comm Scale: Par 4 [Motor NP RPM] = 1.0			Real
780	**PositDetct1 Stpt** Provides the setpoint for Position Watch 1. Position Watch 1 is enabled and configured with Par 740 [Position Control] bits 16 & 17. Position Watch 1 compares this value with Par 784 [Posit Detct1 In] and sets bit 8 [Posit Watch1] of Par 741 [Position Status] when the appropriate condition is satisfied.	Default: 0 Min/Max: -/+2147483648			32-bit Integer
781	**PositDetct2 Stpt** Provides the setpoint for Position Watch 2. Position Watch 2 is enabled and configured with Par 740 [Position Control] bits 18 & 19. Position Watch 2 compares this value with Par 785 [Posit Detct2 In] and sets bit 9 [Posit Watch2] of Par 741 [Position Status] when the appropriate condition is satisfied.	Default: 0 Min/Max: -/+2147483648	✓	✓	32-bit Integer

No.	Name Description	Values	Linkable	Read-Write	Data Type
782	**In Posit BW** Sets overall bandwidth of the In Position detector. The detector sets bit 10 [In Position] of Par 741 [Position Status], when Par 769 [Position Error] is within this bandwidth for a sufficient time, specified by Par 783 [In Posit Dwell]. A modest hysteresis count is added to the position bandwidth after the position error is within specified limits.	Default: 200 Min/Max: 0/1000000	✓	✓	32-bit Integer
783	**In Posit Dwell** Position error must be within the value specified by Par 782 [In Posit BW] for this amount of time before the In Position detector sets bit 10 [In Position] of Par 741 [Position Status]. A momentary out of position indication will reset the internal timer and clear the In Position status bit.	Units: Sec Default: 0.0040 Min/Max: 0.0000/10.0000	✓	✓	Real
784	**Posit Detct1 In** Provides the input variable for Position Watch 1. Position Watch 1 is enabled and configured with Par 740 [Position Control] bits 16 & 17. Position Watch 1 compares this value with Par 780 [PositDetct1 Stpt] and sets bit 8 [Posit Watch1] of Par 741 [Position Status] when the appropriate condition is satisfied. A default link connects this parameter to Par 763 [Act Motor Posit].	Default: 0 Min/Max: -/+2147483648	✓	✓	32-bit Integer
785	**Posit Detct2 In** Provides the input variable for Position Watch 2. Position Watch 2 is enabled and configured with Par 740 [Position Control] bits 18 & 19. Position Watch 2 compares this value with Par 781 [PositDetct2 Stpt] and sets bit 9 [Posit Watch2] of Par 741 [Position Status] when the appropriate condition is satisfied. A default link connects this parameter to Par 763 [Act Motor Posit].	Default: 0 Min/Max: -/+2147483648	✓	✓	32-bit Integer
786	**Xsync Status** Bit 0 [Sync Pulse] will go high for 0.5ms latching the Sync Generator inputs to the Sync Generator outputs. The period at which this bit is set is determined by Par 787 [Xsync Gen Period].				

Options	Reserved	Reserved	Reserved	Reserved	Reserved	Reserved	Reserved	Reserved	Reserved	Reserved	Reserved	Reserved	Reserved	Reserved	Reserved	Reserved	Reserved	Reserved	Reserved	Reserved	Reserved	Reserved	Reserved	Reserved	Reserved	Reserved	Reserved	Reserved	Sync Unstbl	Sync Loss	InterpInSync	Reserved	Sync Pulse
Default	0	0	0	0	0	0	0	0	0	0	0	0	0	0	0	0	0	0	0	0	0	0	0	0	0	0	0	0	1	1	1	1	1
Bit	31	30	29	28	27	26	25	24	23	22	21	20	19	18	17	16	15	14	13	12	11	10	9	8	7	6	5	4	3	2	1	0	

0 = False
1 = True

787	**Xsync Gen Period** Sets the period for the Sync Pulse Generator. Bit 0 [Sync Pulse] of Par 786 [Xsync Status] will be set for 0.5 msec and will be cleared for 0.5msec * 2[Xsync Gen Period] - 0.5 msec.	Default: 1 "4 msec" Options: 0 "2 msec" 1 "4 msec" 2 "8 msec" 3 "16 msec" 4 "32 msec"			
788	**Xsync In 1** 32 bit integer input of the Sync Generator. Latched to Par 789 [Xsync Out 1]. Link any 32 bit integer parameter to this input parameter.	Default: 0 Min/Max: -/+2147483648	✓	✓	32-bit Integer
789	**Xsync Out 1** Sync Generator 32 bit output register. Latched to Par 788 [Xsync In 1] every time bit 0 [Sync Pulse] of Par 786 [Xsync Status] is set.	Default: 0 Min/Max: -/+2147483648			32-bit Integer
790	**Xsync In 2** 32 bit integer input of the Sync Generator. Latched to Par 791 [Xsync Out 2]. Link any 32 bit integer parameter to this input parameter.	Default: 0 Min/Max: -/+2147483648	✓	✓	32-bit Integer
791	**Xsync Out 2** Sync Generator 32 bit output register. Latched to Par 790 [Xsync In 2] every time bit 0 [Sync Pulse] of Par 786 [Xsync Status] is set.	Default: 0 Min/Max: -/+2147483648			32-bit Integer
792	**Xsync Out 2 Dly** Displays data of Par 791 [Xsync Out 2] from the last sync period.	Default: 0 Min/Max: -/+2147483648			32-bit Integer
793	**Xsync In 3** 32 bit integer input of the Sync Generator. Latched to Par 794 [Xsync Out 3]. Link any 32 bit integer parameter to this input parameter.	Default: 0 Min/Max: -/+2200000000.0000	✓	✓	Real
794	**Xsync Out 3** Sync Generator 32 bit output register. Latched to Par 793 [Xsync In 3] every time bit 0 [Sync Pulse] of Par 786 [Xsync Status] is set.	Default: 0 Min/Max: -/+2200000000.0000			Real
795	**Xsync Out 3 Dly** Displays data of Par 794 [Xsync Out 3] from the last sync period.	Default: 0 Min/Max: -/+2200000000.0000			Real

No.	Name Description	Values	Linkable	Read-Write	Data Type
796	**Posit Index Ctrl** Set bits to control the Position Index function. • Setting bit 0 [Enable] allows the Position Index function to run. • Setting bit 1 [Step] causes Par 799 [PositIndexOutput] to change by the amount in Par 797 [Posit Index Step] if bit 0 [Enable] is on. • Setting bit 2 [Reverse] causes Par 799 [PositIndexOutput] to decrement by the value in Par 797 [Posit Index Step] instead of increment if bit 0 [Enable] is on. • Setting bit 3 [Preset] forces the value in Par 798 [PositIndexPreset] into Par 799 [PositIndexOutput] if bit 0 [Enable] is set. Bit 3 [Preset] overrides bits 1 [Step] and 2 [Reverse].				
797	**Posit Index Step** Specifies the amount added to or subtracted from Par 799 [PositIndexOutput] on the rising edge of Par 796 [Posit Index Ctrl], bit 1 [Step]. Note that this value can be positive and negative.	Default: 0 Min/Max: -/+2147483648	✓	✓	32-bit Integer
798	**PositIndexPreset** Specifies the value to be moved into Par 799 [PositIndexOutput] when Par 796 [Posit Index Ctrl], bits 0 [Enable] and 3 [Preset] are on.	Default: 0 Min/Max: -/+2147483648	✓	✓	32-bit Integer
799	**PositIndexOutput** Displays the output of the Position Index function.	Default: 0 Min/Max: -/+2147483648			32-bit Integer
800	**Anlg In1 Data** Displays the value of Analog Input 1. This is the final value (after conversion, offsetting, scaling and filtering).	Default: 0.0000 Min/Max: -/+2200000000.0000			Real
801	**Anlg In1 Volts** Displays the sum of Par 803 [Anlg In1 Offset] and the analog to digital conversion of Analog Input 1. The display range is +/-10V. If switch SW1-1 is closed (set for +/-1.0V) the value is scaled and displayed as +/-10V.	Units: Volt Default: 0.0000 Min/Max: -/+10.0000			Real
802	**Anlg In1 Scale** Scales the range of Analog Input 1 to the range of Par 800 [Anlg In1 Data]. Par 801 [Anlg In1 Volts] is multiplied by this number to produce the input to the lead lag filter function. Par 802 = 1 and Par 800 = 10 when 10V is applied.	Units: /1v Default: 0.0000 Min/Max: -/+2200000000.0000	✓	✓	Real
803	**Anlg In1 Offset** Applies an offset to Analog Input 1. The output of the analog to digital conversion is summed with this number to produce Par 801 [Anlg In1 Volts]. This is used to zero out the analog input.	Units: Volt Default: 0.0000 Min/Max: -/+20.0000	✓	✓	Real
804	**AI 1 Filt Gain** Provides the lead term for the Analog Input 1 filter. A values greater than 1 will result in a lead function and a value less than 1 will result in a lag function.	Default: 1.0000 Min/Max: -/+5.0000	✓	✓	Real
805	**Anlg In1 Filt BW** Sets the frequency for the Analog Input 1 filter.	Units: R/S Default: 0.0000 Min/Max: 0.0000/3760.0000l	✓	✓	Real
806	**Anlg In2 Data** Displays the value of Analog Input 2. This is the final value (after conversion, offsetting, scaling and filtering).	Units: Default: 0.0000 Min/Max: -/+2200000000.0000 Comm Scale: x 1			Real
807	**Anlg In2 Volts** Displays sum of the Par 809 [Anlg In2 Offset] and the analog to digital conversion of Analog Input 1. The display range is +/-10V. If switch SW1-1 is closed (set for +/-1.0V) the value is scaled and displayed as +/-10V.	Units: Volt Default: 0.0000 Min/Max: -/+10.0000			Real
808	**Anlg In2 Scale** Scales the range of Analog Input 2 to the range of Par 806 [Anlg In2 Data]. Par 807 [Anlg In2 Volts] is multiplied by this number to produce the input to the lead lag filter function.	Units: /1v Default: 0.0000 Min/Max: -/+2200000000.0000	✓	✓	Real
809	**Anlg In2 Offset** Applies an offset to Analog Input 2. The output of the analog to digital conversion is summed with this number to produce Par 807 [Anlg In2 Volts].	Units: Volt Default: 0.0000 Min/Max: -/+20.0000	✓	✓	Real
810	**AI 2 Filt Gain** Provides the lead term for the Analog Input 2 filter. A values greater than 1 will result in a lead function and a value less than 1 will result in a lag function.	Default: 1.0000 Min/Max: -/+5.0000	✓	✓	Real
811	**Anlg In2 Filt BW** Sets the frequency for the Analog Input 2 filter.	Units: R/S Default: 0.0000 Min/Max: 0.0000/3760.0000	✓	✓	Real
812	**Anlg Out1 Offset** Provides an offset for Analog Output 1, before the scaling and limit blocks in the Analog Output 1 function. This parameter is summed with either Par 814 [AnlgOut1 Integer] or 815 [Anlg Out1 Real] at the beginning of the function.	Default: 0.0000 Min/Max: -/+2200000000.0000	✓	✓	Real
813	**Anlg Out2 Offset** Provides an offset for Analog Output 2, before the scaling and limit blocks in the Analog Output 2 function. This parameter is summed with either Par 819 [AnlgOut2 Integer] or 820 [Anlg Out2 Real] at the beginning of the function.	Default: 0.0000 Min/Max: -/+2200000000.0000	✓	✓	Real

Options	Reserved	Reserved	Reserved	Reserved	Reserved	Reserved	Reserved	Reserved	Reserved	Reserved	Reserved	Reserved	Preset	Reverse	Step	Enable
Default	0	0	0	0	0	0	0	0	0	0	0	0	0	0	0	0
Bit	15	14	13	12	11	10	9	8	7	6	5	4	3	2	1	0

0 = False
1 = True

No.	Name Description	Values	Linkable	Read-Write	Data Type
814	**AnlgOut1 Integer** Link this parameter to an integer source parameter and that source will control Analog Output 1.	Default: 0 Min/Max: -/+2147483648	✓	✓	32-bit Integer
815	**Anlg Out1 Real** Link this parameter to a real (floating point) source parameter and that source will control Analog Output 1.	Default: 0.0000 Min/Max: -/+2200000000.0000.0000	✓	✓	Real
816	**Anlg Out1 Volts** Displays the voltage reference for Analog Output 1, before the digital to analog conversion.	Units: Volt Default: 0.0000 Min/Max: -/+10.0000			Real
817	**Anlg Out1 Scale** Scales the range of the source parameter to the range of Analog Output 1. Par 814 [AnlgOut1 Integer] or Par 815 [Anlg Out1 Real] is multiplied by this number after the limit function.	Units: /1v Default: 0.0000 Min/Max: -/+2200000000.0000	v	✓	Real
818	**Anlg Out1 Zero** Applies an offset to the scaled value of the Analog Output 1 function. This parameter is summed with the output of the scaling block. This sum produces Par 816 [Anlg Out1 Volts]. Typically this value corresponds to 0V for Analog Output 1.	Units: Volt Default: 0.0000 Min/Max: -/+20.0000	✓	✓	Real
819	**AnlgOut2 Integer** Link this parameter to an integer source parameter and that source will control Analog Output 2.	Default: 0 Min/Max: -/+2147483648	✓	✓	Real
820	**Anlg Out2 Real** Link this parameter to a real (floating point) source parameter and that source will control Analog Output 2.	Default: 0.0000 Min/Max: -/+2200000000.0000	✓	✓	Real
821	**Anlg Out2 Volts** Displays the voltage reference for Analog Output 2, before the digital to analog conversion.	Units: Volt Default: 0.0000 Min/Max: -/+10.0000			Real
822	**Anlg Out2 Scale** Scales the range of the source parameter to the range of Analog Output 2. Par 819 [AnlgOut2 Integer] or Par 820 [Anlg Out2 Real] is multiplied by this number after the limit function.	Units: /1v Default: 0.0000 Min/Max: -/+2200000000.0000	✓	✓	Real
823	**Anlg Out2 Zero** Applies an offset to the scaled value of the Analog Output 2 function. This parameter is summed with the output of the scaling block. This sum produces Par 821 [Anlg Out2 Volts]. Typically this value corresponds to 0V for Analog Output 2.	Units: Volt Default: 0.0000 Min/Max: -/+20.0000	✓	✓	Real
824	**Local I/O Status** Displays the status of the local I/O.				

Options	Reserved	Reserved	Reserved	Reserved	Reserved	Reserved	Reserved	Reserved	Reserved	VPL Gate Ena	Watch Dog	VP TP2 Out	VP TP1 Out	Aux Out 2	Aux Out 1	Output Relay	Reserved	Reserved	Reserved	Reserved	Reserved	Reserved	Reserved	Reserved	Reserved	Reserved	Reserved	LogixPresent	DigIn 3	DigIn 2	DigIn 1	Enable In
Default	0	0	0	0	0	0	0	0	0	0	0	0	0	0	0	0	0	0	0	0	0	0	0	0	0	0	0	0	0	0	0	0
Bit	31	30	29	28	27	26	25	24	23	22	21	20	19	18	17	16	15	14	13	12	11	10	9	8	7	6	5	4	3	2	1	0

0 = False
1 = True

825	**En In Debounce** Sets the value of the debounce filter for the Enable input. The filter requires the input signal to be stable for the specified time period. Input transitions within the filter time setting will be ignored.	Units: mSec Default: 8.0000/0.0000 Min/Max: 15.5000	✓	✓	Real
826	**DigIn1 Data** Sets the value of Par 828 [DigIn1 User Data], except for the bit controlled by bit 1 [DigIn 1] of Par 824 [Local I/O Status].	Default: 00000000000000000000000000000000 Min 00000000000000000000000000000000 Max: 11111111111111111111111111111111	✓	✓	32-bit Boolean
827	**DigIn1 Bit** Selects the bit, in Par 828 [DigIn1 User Data], which is controlled by bit controlled by bit 1 [DigIn 1] of Par 824 [Local I/O Status].	Default: 0 Min/Max: -32/31	✓	✓	16-bit Integer
828	**DigIn1 User Data** Provides a source of data controlled by bit 1 [DigIn 1] of Par 824 [Local I/O Status]. Link to a Read-Write parameter and enter a value of 13 in Par 838 [DigIn1 Sel] to activate this function.	Default: 00000000000000000000000000000000 Min: 00000000000000000000000000000000 Max: 11111111111111111111111111111111			32-bit Boolean
829	**DigIn1 Debounce** Sets the value of the debounce filter for Digital Input 1. The filter requires the input signal to be stable for the specified time period. Input transitions within the filter time setting will be ignored.	Units: mSec Default: 8.0000 Min/Max: 0.0000/15.5000	✓	✓	Real
830	**DigIn2 Data** Sets the value of Par 832 [DigIn2 User Data], except for the bit controlled by bit 2 [DigIn 2] of Par 824 [Local I/O Status].	Default: 00000000000000000000000000000000 Min: 00000000000000000000000000000000 Max: 11111111111111111111111111111111	✓	✓	32-bit Boolean
831	**DigIn2 Bit** Selects the bit, in Par 832 [DigIn2 User Data], which is controlled by bit controlled by bit 2 [DigIn 2] of Par 824 [Local I/O Status].	Default: 0 Min/Max: -32/31	✓	✓	16-bit Integer

No.	Name Description	Values	Linkable	Read-Write	Data Type
832	**DigIn2 User Data** Provides a source of data controlled by bit 2 [DigIn 2] of Par 824 [Local I/O Status]. Link to a Read-Write parameter and enter a value of 13 in Par 839 [DigIn2 Sel] to activate this function.	Default: 00000000000000000000000000000000 Min: 00000000000000000000000000000000 Max: 11111111111111111111111111111111 Comm Scale: Inputs & Outputs Digital Inputs			32-bit Boolean
833	**DigIn2 Debounce** Sets the value of the debounce filter for Digital Input 2. The filter requires the input signal to be stable for the specified time period. Input transitions within the filter time setting will be ignored.	Units: mSec Default: 8.0000 Min/Max: 0.000015.5000	✓	✓	Real
834	**DigIn3 Data** Sets the value of Par 836 [DigIn3 User Data], except for the bit controlled by bit 3 [DigIn 3] of Par 824 [Local I/O Status].	Default: 00000000000000000000000000000000 Min: 00000000000000000000000000000000 Max: 11111111111111111111111111111111	✓	✓	32-bit Boolean
835	**DigIn3 Bit** Selects the bit, in Par 836 [DigIn 3 User Data], which is controlled by bit controlled by bit 3 [DigIn 3] of Par 824 [Local I/O Status].	Default: 0 Min/Max: -32/31	✓	✓	16-bit Integer
836	**DigIn3 User Data** Provides a source of data controlled by bit 3 [DigIn 3] of Par 824 [Local I/O Status]. Link to a Read-Write parameter and enter a value of 13 in Par 840 [DigIn3 Sel] to activate this function.	Default: 00000000000000000000000000000000 Min: 00000000000000000000000000000000 Max: 11111111111111111111111111111111			32-bit Boolean
837	**DigIn3 Debounce** Sets the value of the debounce filter for Digital Input 3. The filter requires the input signal to be stable for the specified time period. Input transitions within the filter time setting will be ignored.	Units: mSec Default: 8.0000 Min/Max: 0.0000/15.5000	✓	✓	Real
838	**DigIn1 Sel** Enter or write a value to select the function of Digital Input 1.	Default: 0 "Not Used" Options: 0 "Not Used" 1 "Normal Stop" 2 "Start" 3 "Run" 4 "Clear Faults" 5 "Stop - CF" 6 "Jog 1" 7 "Jog 2" 8 "Fwd/Reverse" 9 "CurLim Stop" 10 "Coast Stop" 11 "Aux Fault" 12 "AuxFault Inv" 13 "User Select" 14 "PreChrg/Disc"			
839	**DigIn2 Sel** Enter or write a value to select the function of Digital Input 2.	Default: 4 "Not Used" Options: 0 "Not Used" 1 "Normal Stop" 2 "Start" 3 "Run" 4 "Clear Faults" 5 "Stop - CF" 6 "Jog 1" 7 "Jog 2" 8 "Fwd/Reverse" 9 "CurLim Stop" 10 "Coast Stop" 11 "Aux Fault" 12 "AuxFault Inv" 13 "User Select" 14 "Reserved" 15 "Reserved" 16 "Reserved" 17 "Reserved" 18 "Reserved" 19 "Reserved" 20 "Reserved" 21 "Reserved" 22 "Reserved" 23 "Logix Motion" 24 "+Hrd OvrTrvl" 25 "-Hrd OvrTrvl"			
840	**DigIn3 Sel** Enter or write a value to select the function of Digital Input 3.	Default: 0 "Not Used" Options: 0 "Not Used" 1 "Normal Stop" 2 "Start" 3 "Run" 4 "Clear Faults" 5 "Stop-CF" 6 "Jog 1" 7 "Jog 2" 8 "Fwd/Reverse" 9 "CurLim Stop" 10 "Coast Stop" 11 "Aux Fault" 12 "AuxFault Inv" 13 "User Select" 14 "Reserved" 15 "Reserved" 16 "Reserved" 17 "Reserved" 18 "Reserved" 19 "Reserved" 21 "Reserved" 22 "Reserved" 23 "Logix Motion" 24 "+Hrd OvrTrvl" 25 "-Hrd OvrTrvl"			
841	**Relay Out Data** Link a word to this parameter that will control the Relay Output. The bit within the selected word that will control the Relay Output is set by Par 842 [Relay Out Bit].	Default: 00000000000000000000000000000000 Min: 00000000000000000000000000000000 Max: 11111111111111111111111111111111	✓	✓	32-bit Boolean
842	**Relay Out Bit** Selects the bit, from the word linked to Par 841 [Relay Out Data] that will change the status of the Relay Output (e.g., when Par 842 [Relay Out Bit] equals 0, bit 0 of Par 841 [Relay Out Data] will control the Relay Output).	Default: 0 Min/Max: -32/31	✓	✓	16-bit Integer
843	**DigOut 1 Data** Link a word to this parameter that will control Digital Output 1. The bit within the selected word that will control Digital Output 1 is set by Par 844 [DigOut 1 Bit].	Default: 00000000000000000000000000000000 Min: 00000000000000000000000000000000 Max: 11111111111111111111111111111111	✓	✓	32-bit Boolean

No.	Name Description	Values	Linkable	Read-Write	Data Type
844	**DigOut 1 Bit** Selects the bit, from the word linked to Par 843 [DigOut 1 Data], that will change the status of Digital Output 1 (e.g., when Par 844 [DigOut 1 Bit] equals 0, bit 0 of Par 843 [DigOut 1 Data] will control Digital Output 1).	Default: 0 Min/Max: -32/31	✓	✓	16-bit Integer
845	**DigOut 2 Data** Link a word to this parameter that will control Digital Output 2. The bit within the selected word that will control Digital Output 2 is set by Par 846 [DigOut 2 Bit].	Default: 00000000000000000000000000000000 Min: 00000000000000000000000000000000 Max: 11111111111111111111111111111111	✓	✓	32-bit Boolean
846	**DigOut 2 Bit** Selects the bit, from the word linked to Par 845 [DigOut 2 Data], that will change the status of Digital Output 2 (e.g., when Par 846 [DigOut 2 Bit] equals 0, bit 0 of Par 845 [DigOut 2 Data] will control Digital Output 2).	Default: 0 Min/Max: -32/31	✓	✓	16-bit Integer
850	**ParamAccessLevel** The value of this parameter establishes the level of parameter access for the Human Interface Module (HIM). • 0 “Basic” - grants access to the minimum number of parameters • 1 “Advance” - grants access to a larger group of parameters • 2 “Engineering” - grants access to all the parameters	Default: 0 “Basic” Options: 0 “Basic” 1 “Advanced” 2 “Engineering”			
901	**MotnUpdatePeriod** Servo update period for the Servo axis (drive).	Units: uSec Default: 2000 Min/Max: 1/999999			DWord
902	**Motion CoarseMulti** Number of Par 901 [MotnUpdatePeriod] comprising one Course Update Period from the Motion Period.	Default: 4 Min/Max: 2/16			DWord

903 Motn Config

Configuration bits pertaining to Motion-related functions for the Servo axis.

Options	Reserved	Reserved	Reserved	Reserved	Reserved	Reserved	Reserved	Reserved	Reserved	Reserved	Reserved	Reserved	Reserved	Hrd Ovr Trvl	Sft Ovr Trvl	Polarity Neg
Default	1	1	1	1	1	1	1	1	1	1	1	1	1	1	1	1
Bit	15	14	13	12	11	10	9	8	7	6	5	4	3	2	1	0

0 = False
1 = True

904 Motn Axis Status

Status bits pertaining to Motion-related functions for the Servo axis.

Options	Reserved	Reserved	Reserved	Reserved	Reserved	Reserved	Reserved	Reserved	Reserved	Reserved	Reserved	Reserved	Reserved	AxisShtdwnC1	Reserved	Reserved	Chng Ref	Reserved	Reserved	Course Updt	CST Updt Err	-Hrd OvrTrvl	+Hrd OvrTrvl	-Sft OvrTrvl	+Sft OvrTrvl	Reserved	Reserved	Reserved	Posit Lock	AxisShutdown	Drv Enable	Motn Action
Default	0	0	0	0	0	0	0	0	0	0	0	0	0	0	0	0	0	0	0	0	0	0	0	0	0	0	0	0	0	0	0	0
Bit	31	30	29	28	27	26	25	24	23	22	21	20	19	18	17	16	15	14	13	12	11	10	9	8	7	6	5	4	3	2	1	0

0 = False
1 = True

905 Motn AxisControl

Command request bits from the Motion Planner to both the Servo and Feedback Only axis.

Options	ChngCmdRefC1	Reserved	Reserved	Reserved	Reserved	Reserved	Reserved	Reserved	Reserved	Reserved	Reserved	Abrt Evnt C1	Abrt Home C1	Reserved	Shutdown C1	Reserved	ChngCmdRefC0	Reserved	Reserved	Reserved	Reserved	Reserved	Reserved	Reserved	Reserved	Reserved	Reserved	Abrt Evnt C0	Abrt Home C0	Reserved	Shutdown C0	Reserved
Default	0	0	0	0	0	0	0	0	0	0	0	0	0	0	0	0	0	0	0	0	0	0	0	0	0	0	0	0	0	0	0	0
Bit	31	30	29	28	27	26	25	24	23	22	21	20	19	18	17	16	15	14	13	12	11	10	9	8	7	6	5	4	3	2	1	0

0 = False
1 = True

906 Motn Axis Resp

Command response from both the Servo and Feedback Only axis to the Motion Planner.

Options	ChngCmdRefC1	Reserved	Reserved	Reserved	Reserved	Reserved	Reserved	Reserved	Reserved	Reserved	Reserved	Abrt Evnt C1	Abrt Home C1	Reserved	Shutdown C1	Reserved	Chng XRef C0	Reserved	Reserved	Reserved	Reserved	Reserved	Reserved	Reserved	Reserved	Reserved	Reserved	Abrt Evnt C0	Abrt Home C0	Reserved	Shutdown C0	Reserved
Default	0	0	0	0	0	0	0	0	0	0	0	0	0	0	0	0	0	0	0	0	0	0	0	0	0	0	0	0	0	0	0	0
Bit	31	30	29	28	27	26	25	24	23	22	21	20	19	18	17	16	15	14	13	12	11	10	9	8	7	6	5	4	3	2	1	0

0 = False
1 = True

No.	Name Description	Values	Linkable	Read-Write	Data Type
907	**Motn Cnct Status** Status of all Motion connections. Also includes status for the configuration state relating to the motion connections.				

Options	Reserved	Reserved	Reserved	Reserved	Reserved	Reserved	Reserved	Reserved	Reserved	MSO Input	Drive Ready	Asynch Cnct	Event Cnct	Synch Cnct	UserIO Cnct	Config OK
Default	0	0	0	0	0	0	0	0	0	0	0	0	0	0	0	0
Bit	15	14	13	12	11	10	9	8	7	6	5	4	3	2	1	0

0 = False
1 = True

No.	Name Description	Values	Linkable	Read-Write	Data Type
908	**Motn EventStatus** Status of all events supported by the Motion Event Connection.				

Options	Reserved	Reserved	Reserved	Reserved	Reserved	Reserved	Reserved	Reserved	Home	Home Arm	Regis2 Posit	Regis2 X Arm	Regis1 Posit	Regis1 X Arm	Watch Posit	Watch X Arm
Default	0	0	0	0	0	0	0	0	0	0	0	0	0	0	0	0
Bit	15	14	13	12	11	10	9	8	7	6	5	4	3	2	1	0

0 = False
1 = True

No.	Name Description	Values	Linkable	Read-Write	Data Type
909	**Motn Event Ctrl** Shows configuration state of Motion Event functions.				

Options	Reserved	Reserved	Reserved	Reserved	Reserved	Reserved	Reserved	Reserved	Reserved	Home Axis	Event Cndt	Home Type 1	Home Type 0	Wndw Regis2	Wndw Regis1	Watch X Rev
Default	0	0	0	0	0	0	0	0	0	0	0	0	0	0	0	0
Bit	15	14	13	12	11	10	9	8	7	6	5	4	3	2	1	0

0 = False
1 = True

No.	Name Description	Values	Linkable	Read-Write	Data Type
911	**Motn Mx Pos Trvl** Positive soft overtravel threshold for the Motion Servo Axis.	Default: 0 Min/Max: -/+2147483648			DWord
912	**Motn Mx Neg Trvl** Negative soft overtravel threshold for the Motion Servo Axis.	Default: 0 Min/Max: -/+2147483648			DWord
913	**Motn PositErrTol** Position error tolerance for the Motion Servo Axis.	Default: 4096 Min/Max: 0/2147483648			DWord
914	**MotnPositLockTol** Position lock tolerance for the Motion Servo Axis.	Default: 0 Min/Max: 0/2147483648			DWord
917	**Motn Posit Cmmd** Position command input from the Motion Planner. This is linked as the source to the interpolator's coarse position target specified in Par 748 [CoarsePosit Trgt].	Default: 0 Min/Max: -/+2147483648			DWord
918	**Motn Speed Cmmd** Speed command input from the Motion Planner. This is linked as the source to the interpolator's coarse speed target specified in Par 750 [Coarse Spd Trgt].	Units: P.U. Default: 0.0000 Min/Max: -/+8.0000			Real
919	**Motn Posit Sync** Synchronization input signal from the Motion Planner. Pulse received once per coarse update period. This is linked as the course to Par 1003 [Interp SyncInput].				

Options	Reserved	Reserved	Reserved	Reserved	Reserved	Reserved	Reserved	Reserved	Reserved	Reserved	Reserved	Reserved	Reserved	Reserved	Reserved	Reserved	Reserved	Reserved	Reserved	Reserved	Reserved	Reserved	Reserved	Reserved	Reserved	Reserved	Reserved	Reserved	Reserved	Reserved	Reserved	Reserved	SyncDataActv	Sync Pulse
Default	0	0	0	0	0	0	0	0	0	0	0	0	0	0	0	0	0	0	0	0	0	0	0	0	0	0	0	0	0	0	0	0	0	0
Bit	31	30	29	28	27	26	25	24	23	22	21	20	19	18	17	16	15	14	13	12	11	10	9	8	7	6	5	4	3	2	1	0		

0 = False
1 = True

No.	Name Description	Values	Linkable	Read-Write	Data Type
920	**FdbkAxis FdbkSel** Selection for the Motion Feedback Only Axis feedback source. Note: Selections 5 and 6 are only available when compatible feedback option card is installed.	1 "Encoder 1" 0 "Encoder 0" 1 "Encoder 1" 2 "Reserved" 3 "Reserved" 4 "Reserved" 5 "FB Opt Port0" 6 "FB Opt Port1" 7 "SL DirIntRx0" 8 "SL DirIntRx1" 9 "SL DirIntRx2" 10 "SL DirIntRx3"			
921	**FdbkAxis FdbkVal** Present value of the selected feedback for the Motion Feedback Only axis.	Default: 0 Min/Max: -/+2147483648			DWord

No.	Name Description	Values	Linkable	Read-Write	Data Type
922	**Motn TP Select** Selector for diagnostic testpoint relating to Motion functionality.	0 "ServoAxisCnfg" 0 "ServoAxisCnfg" 16 ""CST Upper" 1 "ServoAxisUnwd" 17 "Reserved" 2 "Marker Dist" 18 "Reserved" 3 "HomeEvent X" 19 "I/O Rx Seq#" 4 "Watch Posit" 20 "I/O Rx Msg#" 5 "Home Posit" 21 "I/O Tx Msg# 6 "SrvoMRP Ofst" 22 "Syn Rx Seq#" 7 "SrvoAct Ofst" 23 "Syn RxMsg#" 8 "PositRegis 1" 24 "Syn Tx Msg#" 9 "PositRegis 2" 25 "Evt Rx Seq#" 10 "FdbkAxisCnfg" 26 "Evt Rx Msg#" 11 "FdbkAxisUnwd" 27 "Evt Rx Tx Msg#" 12 "FdbkMRP Ofst" 28 "Asy Rx Seq#" 13 "FdbkAct Ofst" 29 "Asy Rx Msg#" 14 "TimeEvntStat" 30 "Asy Tx Msg#" 15 "CST Lower" 31 "Reset Msg#"			
923	**Motn TP Value** Data for diagnostic testpoint relating to Motion functionality.	Default: 0 Min/Max: -/+2147483648			DWord
924	**Motn RotaryCmmd** Position command input from the Motion Planner to the Servo axis when configured in rotary mode.	Default: 0 Min/Max: -/+2147483648			DWord
925	**MotnUnwdTurnCmmd** Position unwind turns command input from the Motion Planner to the Servo axis when configured in rotary mode.	Default: 0 Min/Max: -/+32768			Word
926	**SrvoAxis RotFdbk** Position feedback output to the Motion Planner for the Servo axis when configured in rotary mode.	Default: 0 Min/Max: -/+2147483648			DWord
927	**SrvoAxisUnwdFdbk** Potion unwind feedback output to the Motion Planner for the Servo axis when configured in rotary mode.	Default: 0 Min/Max: -/+32768			Word
928	**FdbkAxis RotFdbk** Position feedback output to the Motion Planner for the Feedback Only axis when configured in rotary mode.	Default: 0 Min/Max: -/+2147483648			DWord
929	**FdbkAxisUnwdFdbk** Position unwind feedback output to the Motion Planner for the Feedback Only axis when configured in rotary mode.	Default: 0 Min/Max: -/+32768			Word
930	**MotnCnfgErrParam** Indicates a parameter that is not configured properly for a motion connection to be accepted. Parameter could either have a wrong value or an incorrect link. When bit 0 [Config OK] of Par 907 [Motn Cnct Status} is set, then this parameter contains the parameter number of an incorrectly configured parameter. If more than one parameter is incorrectly configured, they are displayed after others are fixed. If there are no configuration problems relating to Motion, then this parameter contains the value of zero and bit 0 [Config OK] of Par 907 is cleared.	Default: 0 Min/Max: 0/65535			Word
940 941	**+Sft OvrTrvlCnfg** **-Sft OvrTrvlCnfg** Synchronization input to the Interpolator has been lost or has become excessively irregular. • 0 "Ignore" - configures the drive to continue running, as normal, when this event occurs • 1 "Alarm" - configures the drive to continue running and set the appropriate alarm bit when this event occurs • 2 "FltCoastStop" - configures the drive to perform a coast stop and set the appropriate fault bit, in response this event. • 3 "Flt RampStop" - configures the drive to perform a ramp stop and set the appropriate fault bit, in response this event. • 4 "FltCurLimStp" - configures the drive to perform a current-limit stop and set the appropriate fault bit, in response this event.	Default: 1 "Alarm" Options: 0 "Ignore" 1 "Alarm" 2 "FltCoastStop" 3 "Flt RampStop" 4 "FltCurLimStp"			
942 943	**+Hrd OvrTrvlCnfg** **-Hrd OvrTrvlCnfg** Active signal from a digital input that is configured as a positive hard overtravel input. • 0 "Ignore" - configures the drive to continue running, as normal, when this event occurs • 1 "Alarm" - configures the drive to continue running and set the appropriate alarm bit when this event occurs • 2 "FltCoastStop" - configures the drive to perform a coast stop and set the appropriate fault bit, in response this event. • 3 "Flt RampStop" - configures the drive to perform a ramp stop and set the appropriate fault bit, in response this event. • 4 "FltCurLimStp" - configures the drive to perform a current-limit stop and set the appropriate fault bit, in response this event.	Default: 1 "Alarm" Options: 0 "Ignore" 1 "Alarm" 2 "FltCoastStop" 3 "Flt RampStop" 4 "FltCurLimStp"			

No.	Name Description	Values	Linkable	Read-Write	Data Type
944	**Positin ErrCnfg** Position error for a Motion Servo axis has exceeded the configured limit. • 0 “Ignore” - configures the drive to continue running, as normal, when this event occurs • 1 “Alarm” - configures the drive to continue running and set the appropriate alarm bit when this event occurs • 2 “FltCoastStop” - configures the drive to perform a coast stop and set the appropriate fault bit, in response this event. • 3 “Flt RampStop” - configures the drive to perform a ramp stop and set the appropriate fault bit, in response this event. • 4 “FltCurLimStp” - configures the drive to perform a current-limit stop and set the appropriate fault bit, in response this event.	Default: 1 “Alarm” Options: 0 “Ignore” 1 “Alarm” 2 “FltCoastStop” 3 “Flt RampStop” 4 “FltCurLimStp”			
1000	**SL Node Cnfg** Set bits to configure the SynchLink node. • Setting bit 0 [Time Keeper] configures the local node as the Time Master. • Setting bit 2 [Sync Now] configures the node to synchronize with the Time Master immediately (1-2S per node) on power-up or recovery. If you do not set bit 2, the node will stay in the fast mode, taking up to 36S per node to synchronize on power-up or recovery.				
1001	**SynchLink Rev** Indicates the current revision of the local SynchLink Programmable Logic Firmware.	Default: 0.1 Min/Max: 0.1/999.9 Comm Scale: x 10			16-bit Integer
1002	**SL System Rev** Indicates the system revision of the SynchLink network. To be compatible on the network, all nodes must have the same major revision.	Default: 0.001 Min/Max: 0.001/999.999 Comm Scale: x 1000			32-bit Integer
1003	**Interp SynchInput** Bit 0 [Sync Pulse] of this parameter is used as the synchronization pulse for he Interpolator. This parameter is linked to Par 919 [Motn Posit Sync] for a Motion Servo axis. It is linked to Par 786 [Xsync Status] for a SynchLink application.				
1010	**SL Rx Comm Frmt** Defines the node's communication format for receiving SynchLink data. This determines the number of axis data, direct data and buffered data words received. Configure the format by using the Peer Communication window in the DriveExecutive programming software.	Options: Value / (A)xis / (D)irect / (B)uffered 0 / 0 / 0 / 0 6 / 1 / 2 / 4 7 / 0 / 2 / 18 9 / 0 / 4 / 8 16 / 1 / 4 / 4 17 / 0 / 4 / 18			
1011	**SL Rx DirectSel0** Determines the destination for the data received at word 0 of direct received data. Configure the selection by using the Peer Communication window in the DriveExecutive programming software.	Default: 0 “No Data” Options: 0 “No Data” 1 “SL Multiply” 2 “Event P0” 3 “Reserved” 4 “Reserved” 5 “Reserved” 6 “Reserved” 7 “Reserved” 8 “Event Opt0” 9 “Reserved” 10 “Event Status”			
1012	**SL Rx DirectSel1** Determines the destination for the data received at word 1 of direct received data. Configure the selection by using the Peer Communication window in the DriveExecutive programming software.	Default: 0 “No Data” Options: 0 “No Data” 1 “SL Multiply” 2 “Event P0” 3 “Reserved” 4 “Reserved” 5 “Reserved” 6 “Reserved” 7 “Reserved” 8 “Event Opt0” 9 “Reserved” 10 “Event Status”			

1000 SL Node Cnfg — Options

Bit	15	14	13	12	11	10	9	8	7	6	5	4	3	2	1	0
	Reserved	Reserved	Reserved	Reserved	Reserved	Reserved	Reserved	Reserved	Reserved	Reserved	Reserved	Reserved	Reserved	Sync Now	Reserved	Time Keeper
Default	0	0	0	0	0	0	0	0	0	0	0	0	0	0	0	0

0 = False
1 = True

1003 Interp SynchInput — Options

Bit	31	30	29	28	27	26	25	24	23	22	21	20	19	18	17	16	15	14	13	12	11	10	9	8	7	6	5	4	3	2	1	0
	Reserved	Reserved	Reserved	Reserved	Reserved	Reserved	Reserved	Reserved	Reserved	Reserved	Reserved	Reserved	Reserved	Reserved	Reserved	Reserved	Reserved	Reserved	Reserved	Reserved	Reserved	Reserved	Reserved	Reserved	Reserved	Reserved	Reserved	Reserved	Reserved	Reserved	Reserved	Sync Pulse
Default	0	0	0	0	0	0	0	0	0	0	0	0	0	0	0	0	0	0	0	0	0	0	0	0	0	0	0	0	0	0	0	0

0 = False
1 = True

No.	Name Description	Values					Linkable	Read-Write	Data Type
1013	**SL Rx DirectSel2** Determines the destination for the data received at word 2 of direct received data. Configure the selection by using the Peer Communication window in the DriveExecutive programming software.	Default:	0	"No Data"					
		Options:	0	"No Data"	6	"Reserved"			
			1	"SL Multiply"	7	"Reserved"			
			2	"Event P0"	8	"Event Opt0"			
			3	"Reserved"	9	"Reserved"			
			4	"Reserved"	10	"Event Status"			
			5	"Reserved"					
1014	**SL Rx DirectSel3** Determines the destination for the data received at word 3 of direct received data. Configure the selection by using the Peer Communication window in the DriveExecutive programming software.	Default:	0	"No Data"					
		Options:	0	"No Data"	6	"Reserved"			
			1	"SL Multiply"	7	"Reserved"			
			2	"Event P0"	8	"Event Opt0"			
			3	"Reserved"	9	"Reserved"			
			4	"Reserved"	10	"Event Status"			
			5	"Reserved"					
1020	**SL Tx Comm Frmt** Defines the node's communication format for transmitting SynchLink data. This determines the number of axis data words, direct data words and buffered data words transmitted. Configure the format by using the Peer Communication window in the DriveExecutive programming software.		Value	Axis	Direct	Buffered			
		Options	0	0	0	0			
			7	0	2	18			
			9	0	4	8			
			17	0	4	18			
1021	**SL Tx DirectSel0** Determines the source type for the data transmitted by direct transmit word 0. The source type selections are: no data, event, feedback and drive parameter. If drive parameter is selected, a parameter of the appropriate data format (integer or real) must be linked to Parameter 1141 [SL Dir Int Tx0] or Parameter 1142 [SL Dir Real Tx0]. Configure the selection by using the Peer Communication window in the DriveExecutive programming software.	Default:	0	"No Data"					
		Options:	0	"No Data"	14	"Reserved"			
			1	"SL Multiply"	15	"Reserved"			
			2	"Event P0"	16	"Reserved"			
			3	"Event P1"	17	"Reserved"			
			4	"Reserved"	18	"Reserved"			
			5	"Reserved"	19	"Reserved"			
			6	"Reserved"	20	"Reserved"			
			7	"Reserved"	21	"Dir Tx Data"			
			8	"Event Opt0"	22	"Dir Rx Data"			
			9	"Reserved"	23	"E0 Accum"			
			10	"Event Status"	24	"E1 Accum"			
			11	"Reserved"	25	"Opt0 Accum"			
			12	"Reserved"	26	"Opt1 Accum"			
			13	"Reserved"					
1022	**SL Tx DirectSel1** Determines the source type for the data transmitted by direct transmit word 1. The source type selections are: no data, event, feedback and drive parameter. If drive parameter is selected, a parameter of the appropriate data format (integer or real) must be linked to Par 1143 [SL Dir Int Tx1] or Par 1144 [SL Dir Real Tx1]. Configure the selection by using the Peer Communication window in the DriveExecutive programming software.	Default:	0	"No Data"					
		Options:	0	"No Data"	14	"Reserved"			
			1	"SL Multiply"	15	"Reserved"			
			2	"Event P0"	16	"Reserved"			
			3	"Event P1"	17	"Reserved"			
			4	"Reserved"	18	"Reserved"			
			5	"Reserved"	19	"Reserved"			
			6	"Reserved"	20	"Reserved"			
			7	"Reserved"	21	"Dir Tx Data"			
			8	"Event Opt0"	22	"Dir Rx Data"			
			9	"Reserved"	23	"E0 Accum"			
			10	"Event Status"	24	"E1 Accum"			
			11	"Reserved"	25	"Opt0 Accum"			
			12	"Reserved"	26	"Opt1 Accum"			
			13	"Reserved"					
1023	**SL Tx DirectSel2** Determines the source type for the data transmitted by direct transmit word 2. The source type selections are: no data, event, feedback and drive parameter. If drive parameter is selected, a parameter of the appropriate data format (integer or real) must be linked to Parameter 1145 [SL Dir Int Tx2] or Parameter 1146 [SL Dir Real Tx2]. Configure the selection by using the Peer Communication window in the DriveExecutive programming software.	Default:	0	"No Data"					
		Options:	0	"No Data"	14	"Reserved"			
			1	"SL Multiply"	15	"Reserved"			
			2	"Event P0"	16	"Reserved"			
			3	"Event P1"	17	"Reserved"			
			4	"Reserved"	18	"Reserved"			
			5	"Reserved"	19	"Reserved"			
			6	"Reserved"	20	"Reserved"			
			7	"Reserved"	21	"Dir Tx Data"			
			8	"Event Opt0"	22	"Dir Rx Data"			
			9	"Reserved"	23	"E0 Accum"			
			10	"Event Status"	24	"E1 Accum"			
			11	"Reserved"	25	"Opt0 Accum"			
			12	"Reserved"	26	"Opt1 Accum"			
			13	"Reserved"					

No.	Name Description	Values	Linkable	Read-Write	Data Type
1024	**SL Tx DirectSel3** Determines the source type for the data transmitted by direct transmit word 3. The source type selections are: no data, event, feedback and drive parameter. If drive parameter is selected, a parameter of the appropriate data format (integer or real) must be linked to Par 1147 [SL Dir Int Tx3] or Par 1148 [SL Dir Real Tx3]. Configure the selection by using the Peer Communication window in the DriveExecutive programming software.	Default: 0 "No Data" Options: 0 "No Data" 1 "SL Multiply" 2 "Event P0" 3 "Event P1" 4 "Reserved" 5 "Reserved" 6 "Reserved" 7 "Reserved" 8 "Event Opt0" 9 "Reserved" 10 "Event Status" 11 "Reserved" 12 "Reserved" 13 "Reserved" 14 "Reserved" 15 "Reserved" 16 "Reserved" 17 "Reserved" 18 "Reserved" 19 "Reserved" 20 "Reserved" 21 "Dir Tx Data" 22 "Dir Rx Data" 23 "E0 Accum" 24 "E1 Accum" 25 "Opt0 Accum" 26 "Opt1 Accum"			
1030	**SL Mult A In** Displays the A Multiplier Input, as a floating point (real) value. This value is divided by the Par 1032 [SL Mult Base]. The source of the A Multiplier is determined by the "Rx Direct Data Selector" (Pars 1011-1014). The possible sources are: 0 (zero), Par 1054 [SL Dir Int Rx0], Par 1056 [SL Dir Int Rx1], Par 1058 [SL Dir Int Rx2], or Par 1060 [SL Dir Int Rx3]. The SynchLink Multiply function takes this input before it is converted to floating point.	Default: 0.0000 Min/Max: 0.0000/65535.0000			Real
1031	**SL Mult B In** The B Multiplier Input. This must be a floating point (real) value. The SynchLink Multiply function takes this input after it is converted to integer.	Default: 1.0000 Min/Max: 0.25000/2.0000	✓	✓	Real
1032	**SL Mult Base** Specifies the base for SynchLink real to integer and integer to real conversion functions. Determines the resolution of the conversion results. You must use the same value at the transmitting node and receiving / multiplying nodes. Enter a value that will not produce an overflow - the product of this value and the inputs to the conversion and multiply functions must be less than 65,536.	Default: 10000.0000 Min/Max: 0.2000/50000.0000		✓	Real
1033	**SL Mult Out** Displays the output of the SynchLink Multiply function as a floating (real) value. The value is the result of the formula Par 1030 [SL Mult A In] source (integer) x Par 1031 [SL Mult B In] / Par 1032 [SL Mult Base] or Par 1030 [SL Mult A In] x Par 1031 [SL Mult B In]. Note: the SynchLink Multiply function produces an output that is always positive.	Default: 0.0000 Min/Max: 0.0000/65535.0000			Real

1034 SL Mult State

Displays the status of the SynchLink Multiply function.

- Bit 0 [Local Ovflow] indicates a math overflow due to local multiply.
- Bit 1 [Rx Overflow] indicates a math overflow in received data.
- Bit 3 [Ftol Ovflow] indicates a math overflow in the real to integer conversion function.

Options	Reserved	Reserved	Reserved	Reserved	Reserved	Reserved	Reserved	Reserved	Reserved	Reserved	Reserved	Reserved	Reserved	Reserved	Reserved	Reserved	Reserved	Reserved	Reserved	Reserved	Reserved	Reserved	Reserved	Reserved	Reserved	Reserved	Reserved	Reserved	Ftol Ovflow	Reserved	Rx Ovflow	Local Ovflow
Default	0	0	0	0	0	0	0	0	0	0	0	0	0	0	0	0	0	0	0	0	0	0	0	0	0	0	0	0	0	0	0	0
Bit	31	30	29	28	27	26	25	24	23	22	21	20	19	18	17	16	15	14	13	12	11	10	9	8	7	6	5	4	3	2	1	0

0 = False
1 = True

No.	Name Description	Values	Linkable	Read-Write	Data Type
1035	**Real to Int In** Provides the floating point (real) input to the real to integer conversion function.	Default: 0.0000 Min/Max: -/+16.0000	✓	v	Real
1036	**Real to Int Out** Displays the integer output of the real to integer conversion function. The value is the result of the formula Par 1035 [Real to Int In] x Par 1032 [SL Mult Base].	Default: 0 Min/Max: 0/65535			16-bit Integer

1040 SL Rcv Events

Displays the received event status from Par 1041 [SL Rx P0 Regis] through Par 1047 [SL Rx Opt0 Regis].

Options	Reserved	Reserved	Reserved	Reserved	Reserved	Reserved	Reserved	Reserved	Reserved	Reserved	Reserved	Reserved	Reserved	Reserved	Reserved	Reserved	Reserved	Reserved	Reserved	Reserved	Reserved	Reserved	Reserved	Reserved	Reserved	Opt0 Regis	Reserved	Reserved	Reserved	D0Reserved	E1 Regis	E0 Regis
Default	0	0	0	0	0	0	0	0	0	0	0	0	0	0	0	0	0	0	0	0	0	0	0	0	0	0	0	0	0	0	0	0
Bit	31	30	29	28	27	26	25	24	23	22	21	20	19	18	17	16	15	14	13	12	11	10	9	8	7	6	5	4	3	2	1	0

0 = False
1 = True

No.	Name Description	Values	Linkable	Read-Write	Data Type
1041	**SL Rx P0 Regis** Displays received port 0 registration data, if direct received data is configured to be port 0 registration data by the Rx Direct Data Selector (Pars 1011-1014). Configure this selection by using the Peer Communication window in the DriveExecutive programming software.	Default: 0 Min/Max: -/+2147483648			32-bit Integer

No.	Name Description	Values	Linkable	Read-Write	Data Type
1042	**SL Rx P1 Regis** Displays received port 1 registration data, if direct received data is configured to be port 1 registration data by the Rx Direct Data Selector (Pars 1011-1014). Configure this selection by using the Peer Communication window in the DriveExecutive programming software.	Default: 0 Min/Max: -/+2147483648			32-bit Integer
1047	**SL Rx Opt0 Regis** Displays received registration data from feedback option 1 (high resolution encoder daughter card), if direct received data is configured to be feedback option 1 registration data by the Rx Direct Data Selector (Pars 1011-1014). Configure this selection by using the Peer Communication window in the DriveExecutive programming software.	Default: 0 Min/Max: -/+2147483648			32-bit Integer
1049	**SL Clr Events** Set these bits to clear the corresponding event latches indicated in Par 1040 [SL Rcv Events].				

Options	Reserved	Reserved	Reserved	Reserved	Reserved	Reserved	Reserved	Reserved	Reserved	Reserved	Reserved	Reserved	Reserved	Reserved	Reserved	Reserved	Reserved	Reserved	Reserved	Reserved	Reserved	Reserved	Reserved	Reserved	Reserved	Opt0 Regis	Reserved	Reserved	Reserved	Reserved	E1 Regis	E0 Regis
Default	0	0	0	0	0	0	0	0	0	0	0	0	0	0	0	0	0	0	0	0	0	0	0	0	0	0	0	0	0	0	0	0
Bit	31	30	29	28	27	26	25	24	23	22	21	20	19	18	17	16	15	14	13	12	11	10	9	8	7	6	5	4	3	2	1	0

0 = False
1 = True

No.	Name Description	Values	Linkable	Read-Write	Data Type
1054	**SL Dir Int Rx0** Displays the integer value of the Direct Received Data for word 0. Data transmitted from one node to another must be the same data type. This parameter is paired with Par 1055 [SL Dir Real Rx0].	Default: 0 Min/Max: -/+2147483648			32-bit Integer
1055	**SL Dir Real Rx0** Displays the floating point (real) value of the Direct Received Data for word 0. Data transmitted from one node to another must be the same data type. This parameter is paired with Par 1054 [SL Dir Int Rx0].	Default: 0.0000 Min/Max: -/+2200000000.0000			Real
1056	**SL Dir Int Rx1** Displays the integer value of the Direct Received Data for word 1. Data transmitted from one node to another must be the same data type. This parameter is paired with Par 1057 [SL Dir Real Rx1].	Default: 0 Min/Max: -/+2147483648			32-bit Integer
1057	**SL Dir Real Rx1** Displays the floating point (real) value of the Direct Received Data for word 1. Data transmitted from one node to another must be the same data type. This parameter is paired with Par 1056 [SL Dir Int Rx1].	Default: 0.0000 Min/Max: -/+2200000000.0000			Real
1058	**SL Dir Int Rx2** Displays the integer value of the Direct Received Data for word 2. Data transmitted from one node to another must be the same data type. This parameter is paired with Par 1059 [SL Dir Real Rx2].	Default: 0 Min/Max: -/+2147483648			32-bit Integer
1059	**SL Dir Real Rx2** Displays the floating point (real) value of the Direct Received Data for word 2. Data transmitted from one node to another must be the same data type. This parameter is paired with Par 1058 [SL Dir Int Rx2].	Default: 0.0000 Min/Max: -/+2200000000.0000			Real
1060	**SL Dir Int Rx3** Displays the integer value of the Direct Received Data for word 3. Data transmitted from one node to another must be the same data type. This parameter is paired with Par 1061 [SL Dir Real Rx3].	Default: 0 Min/Max: -/+2147483648			32-bit Integer
1061	**SL Dir Real Rx3** Displays the floating point (real) value of the Direct Received Data for word 3. Data transmitted from one node to another must be the same data type. This parameter is paired with Par 1060 [SL Dir Int Rx3].	Default: 0.0000 Min/Max: -/+2200000000.0000			Real
1073	**SL Buf Int Rx00** Displays the integer value of the Buffered Received Data for word 0. Data transmitted from one node to another must be the same data type. This parameter is paired with Par 1074 [SL Buf Real Rx00].	Default: 0 Min/Max: -/+2147483648			32-bit Integer
1074	**SL Buf Real Rx00** Displays the floating point (real) value of the Buffered Received Data for word 0. Data transmitted from one node to another must be the same data type. This parameter is paired with Par 1073 [SL Buf Int Rx00].	Default: 0.0000 Min/Max: -/+2200000000.0000			Real
1075	**SL Buf Int Rx01** Displays the integer value of the Buffered Received Data for word 1. Data transmitted from one node to another must be the same data type. This parameter is paired with Par 1076 [SL Buf Real Rx01].	Default: 0 Min/Max: -/+2147483648			32-bit Integer
1076	**SL Buf Real Rx01** Displays the floating point (real) value of the Buffered Received Data for word 1. Data transmitted from one node to another must be the same data type. This parameter is paired with Par 1075 [SL Buf Int Rx01].	Default: 0.0000 Min/Max: -/+2200000000.0000			Real
1077	**SL Buf Int Rx02** Displays the integer value of the Buffered Received Data for word 2. Data transmitted from one node to another must be the same data type. This parameter is paired with Par 1078 [SL Buf Real Rx02].	Default: 0 Min/Max: -/+2147483648			32-bit Integer

No.	Name Description	Values	Linkable	Read-Write	Data Type
1078	**SL Buf Real Rx02** Displays the floating point (real) value of the Buffered Received Data for word 2. Data transmitted from one node to another must be the same data type. This parameter is paired with Par 1077 [SL Buf Int Rx02].	Default: 0.0000 Min/Max: -/+2200000000.0000			Real
1079	**SL Buf Int Rx03** Displays the integer value of the Buffered Received Data for word 3. Data transmitted from one node to another must be the same data type. This parameter is paired with Par 1080 [SL Buf Real Rx03].	Default: 0 Min/Max: -/+2147483648			32-bit Integer
1080	**SL Buf Real Rx03** Displays the floating point (real) value of the Buffered Received Data for word 3. Data transmitted from one node to another must be the same data type. This parameter is paired with Par 1079 [SL Buf Int Rx03].	Default: 0.0000 Min/Max: -/+2200000000.0000			Real
1081	**SL Buf Int Rx04** Displays the integer value of the Buffered Received Data for word 4. Data transmitted from one node to another must be the same data type. This parameter is paired with Par 1082 [SL Buf Real Rx04].	Default: 0 Min/Max: -/+2147483648			32-bit Integer
1082	**SL Buf Real Rx04** Displays the floating point (real) value of the Buffered Received Data for word 4. Data transmitted from one node to another must be the same data type. This parameter is paired with Par 1081 [SL Buf Int Rx04].	Default: 0.0000 Min/Max: -/+2200000000.0000			Real
1083	**SL Buf Int Rx05** Displays the integer value of the Buffered Received Data for word 5. Data transmitted from one node to another must be the same data type. This parameter is paired with Par 1084 [SL Buf Real Rx05].	Default: 0 Min/Max: -/+2147483648			32-bit Integer
1084	**SL Buf Real Rx05** Displays the floating point (real) value of the Buffered Received Data for word 5. Data transmitted from one node to another must be the same data type. This parameter is paired with Par 1083 [SL Buf Int Rx05].	Default: 0.0000 Min/Max: -/+2200000000.0000			Real
1085	**SL Buf Int Rx06** Displays the integer value of the Buffered Received Data for word 6. Data transmitted from one node to another must be the same data type. This parameter is paired with Par 1086 [SL Buf Real Rx06].	Default: 0 Min/Max: -/+2147483648			32-bit Integer
1086	**SL Buf Real Rx06** Displays the floating point (real) value of the Buffered Received Data for word 6. Data transmitted from one node to another must be the same data type. This parameter is paired with Par 1085 [SL Buf Int Rx06].	Default: 0.0000 Min/Max: -/+2200000000.0000			Real
1087	**SL Buf Int Rx07** Displays the integer value of the Buffered Received Data for word 7. Data transmitted from one node to another must be the same data type. This parameter is paired with Par 1088 [SL Buf Real Rx07].	Default: 0 Min/Max: -/+2147483648			32-bit Integer
1088	**SL Buf Real Rx07** Displays the floating point (real) value of the Buffered Received Data for word 7. Data transmitted from one node to another must be the same data type. This parameter is paired with Par 1087 [SL Buf Int Rx07].	Default: 0.0000 Min/Max: -/+2200000000.0000			Real
1089	**SL Buf Int Rx08** Displays the integer value of the Buffered Received Data for word 8. Data transmitted from one node to another must be the same data type. This parameter is paired with Par 1090 [SL Buf Real Rx08].	Default: 0 Min/Max: -/+2147483648			32-bit Integer
1090	**SL Buf Real Rx08** Displays the floating point (real) value of the Buffered Received Data for word 8. Data transmitted from one node to another must be the same data type. This parameter is paired with Par 1089 [SL Buf Int Rx08].	Default: 0.0000 Min/Max: -/+2200000000.0000			Real
1091	**SL Buf Int Rx09** Displays the integer value of the Buffered Received Data for word 9. Data transmitted from one node to another must be the same data type. This parameter is paired with Par 1092 [SL Buf Real Rx09].	Default: 0 Min/Max: -/+2147483648			32-bit Integer
1092	**SL Buf Real Rx09** Displays the floating point (real) value of the Buffered Received Data for word 9. Data transmitted from one node to another must be the same data type. This parameter is paired with Par 1091 [SL Buf Int Rx09].	Default: 0.0000 Min/Max: -/+2200000000.0000			Real
1093	**SL Buf Int Rx10** Displays the integer value of the Buffered Received Data for word 10. Data transmitted from one node to another must be the same data type. This parameter is paired with Par 1094 [SL Buf Real Rx10].	Default: 0 Min/Max: -/+2147483648			32-bit Integer
1094	**SL Buf Real Rx10** Displays the floating point (real) value of the Buffered Received Data for word 10. Data transmitted from one node to another must be the same data type. This parameter is paired with Par 1093 [SL Buf Int Rx10].	Default: 0.0000 Min/Max: -/+2200000000.0000			Real
1095	**SL Buf Int Rx11** Displays the integer value of the Buffered Received Data for word 11. Data transmitted from one node to another must be the same data type. This parameter is paired with Par 1096 [SL Buf Real Rx11].	Default: 0 Min/Max: -/+2147483648			32-bit Integer

No.	Name Description	Values	Linkable	Read-Write	Data Type
1096	**SL Buf Real Rx11** Displays the floating point (real) value of the Buffered Received Data for word 11. Data transmitted from one node to another must be the same data type. This parameter is paired with Par 1095 [SL Buf Int Rx11].	Default: 0.0000 Min/Max: -/+2200000000.0000			Real
1097	**SL Buf Int Rx12** Displays the integer value of the Buffered Received Data for word 12. Data transmitted from one node to another must be the same data type. This parameter is paired with Par 1098 [SL Buf Real R12].	Default: 0 Min/Max: -/+2147483648			32-bit Integer
1098	**SL Buf Real Rx12** Displays the floating point (real) value of the Buffered Received Data for word 12. Data transmitted from one node to another must be the same data type. This parameter is paired with Par 1097 [SL Buf Int R12].	Default: 0.0000 Min/Max: -/+2200000000.0000			Real
1099	**SL Buf Int Rx13** Displays the integer value of the Buffered Received Data for word 13. Data transmitted from one node to another must be the same data type. This parameter is paired with Par 1100 [SL Buf Real R13].	Default: 0 Min/Max: -/+2147483648			32-bit Integer
1100	**SL Buf Real Rx13** Displays the floating point (real) value of the Buffered Received Data for word 13. Data transmitted from one node to another must be the same data type. This parameter is paired with Par 1099 [SL Buf Int R13].	Default: 0.0000 Min/Max: -/+2200000000.0000.0000			Real
1101	**SL Buf Int Rx14** Displays the integer value of the Buffered Received Data for word 14. Data transmitted from one node to another must be the same data type. his parameter is paired with Par 1102 [SL Buf Real R14].	Default: 0 Min/Max: -/+2147483648			32-bit Integer
1102	**SL Buf Real Rx14** Displays the floating point (real) value of the Buffered Received Data for word 14. Data transmitted from one node to another must be the same data type. This parameter is paired with Par 1101 [SL Buf Int R14].	Default: 0.0000 Min/Max: -/+2200000000.0000			Real
1103	**SL Buf Int Rx15** Displays the integer value of the Buffered Received Data for word 15. Data transmitted from one node to another must be the same data type. This parameter is paired with Par 1104 [SL Buf Real R15].	Default: 0 Min/Max: -/+2147483648			32-bit Integer
1104	**SL Buf Real Rx15** Displays the floating point (real) value of the Buffered Received Data for word 15. Data transmitted from one node to another must be the same data type. This parameter is paired with Par 1103 [SL Buf Int R15].	Default: 0.0000 Min/Max: -/+2200000000.0000			Real
1105	**SL Buf Int Rx16** Displays the integer value of the Buffered Received Data for word 16. Data transmitted from one node to another must be the same data type. This parameter is paired with Par 1106 [SL Buf Real Rx16].	Default: 0 Min/Max: -/+2147483648			32-bit Integer
1106	**SL Buf Real Rx16** Displays the floating point (real) value of the Buffered Received Data for word 16. Data transmitted from one node to another must be the same data type. This parameter is paired with Par 1105 [SL Buf Int Rx16].	Default: 0.0000 Min/Max: -/+2200000000.0000			Real
1107	**SL Buf Int Rx17** Displays the integer value of the Buffered Received Data for word 17. Data transmitted from one node to another must be the same data type. This parameter is paired with Par 1108 [SL Buf Real Rx17].	Default: 0 Min/Max: -/+2147483648			32-bit Integer
1108	**SL Buf Real Rx17** Displays the floating point (real) value of the Buffered Received Data for word 17. Data transmitted from one node to another must be the same data type. This parameter is paired with Par 1107 [SL Buf Int Rx17].	Default: 0.0000 Min/Max: -/+2200000000.0000			Real
1109	**SL Buf Int Rx18** Displays the integer value of the Buffered Received Data for word 18. Data transmitted from one node to another must be the same data type. This parameter is paired with Par 1110 [SL Buf Real Rx18].	Default: 0 Min/Max: -/+2147483648			32-bit Integer
1110	**SL Buf Real Rx18** Displays the floating point (real) value of the Buffered Received Data for word 18. Data transmitted from one node to another must be the same data type. This parameter is paired with Par 1109 [SL Buf Int Rx18].	Default: 0.0000 Min/Max: -/+2200000000.0000			Real
1111	**SL Buf Int Rx19** Displays the integer value of the Buffered Received Data for word 19. Data transmitted from one node to another must be the same data type. This parameter is paired with Par 1112 [SL Buf Real Rx19].	Default: 0 Min/Max: -/+2147483648			32-bit Integer
1112	**SL Buf Real Rx19** Displays the floating point (real) value of the Buffered Received Data for word 19. Data transmitted from one node to another must be the same data type. This parameter is paired with Par 1111 [SL Buf Int Rx19].	Default: 0.0000 Min/Max: -/+2200000000.0000			Real
1113	**SL Buf Int Rx20** Displays the integer value of the Buffered Received Data for word 20. Data transmitted from one node to another must be the same data type. This parameter is paired with Par 1114 [SL Buf Real Rx20].	Default: 0 Min/Max: -/+2147483648			32-bit Integer

No.	Name Description	Values	Linkable	Read-Write	Data Type
1114	**SL Buf Real Rx20** Displays the floating point (real) value of the Buffered Received Data for word 20. Data transmitted from one node to another must be the same data type. This parameter is paired with Par 1113 [SL Buf Int Rx20].	Default: 0.0000 Min/Max: -/+2200000000.0000			Real
1115	**SL Buf Int Rx21** Displays the integer value of the Buffered Received Data for word 21. Data transmitted from one node to another must be the same data type. This parameter is paired with Par 1116 [SL Buf Real Rx21].	Default: 0 Min/Max: -/+2147483648			32-bit Integer
1116	**SL Buf Real Rx21** Displays the floating point (real) value of the Buffered Received Data for word 21. Data transmitted from one node to another must be the same data type. This parameter is paired with Par 1115 [SL Buf Int Rx21].	Default: 0.0000 Min/Max: -/+2200000000.0000			Real
1117	**SL Buf Int Rx22** Displays the integer value of the Buffered Received Data for word 22. Data transmitted from one node to another must be the same data type. This parameter is paired with Par 1118 [SL Buf Real Rx22].	Default: 0 Min/Max: -/+2147483648			32-bit Integer
1118	**SL Buf Real Rx22** Displays the floating point (real) value of the Buffered Received Data for word 22. Data transmitted from one node to another must be the same data type. This parameter is paired with Par 1117 [SL Buf Int Rx22].	Default: 0.0000 Min/Max: -/+2200000000.0000			Real
1119	**SL Buf Int Rx23** Displays the integer value of the Buffered Received Data for word 23. Data transmitted from one node to another must be the same data type. This parameter is paired with Par 1120 [SL Buf Real Rx23].	Default: 0 Min/Max: -/+2147483648			32-bit Integer
1120	**SL Buf Real Rx23** Displays the floating point (real) value of the Buffered Received Data for word 23. Data transmitted from one node to another must be the same data type. This parameter is paired with Par 1119 [SL Buf Int Rx23].	Default: 0.0000 Min/Max: -/+2200000000.0000			Real
1121	**SL Buf Int Rx24** Displays the integer value of the Buffered Received Data for word 24. Data transmitted from one node to another must be the same data type. This Par is paired with Par 1122 [SL Buf Real Rx24].	Default: 0 Min/Max: -/+2147483648			32-bit Integer
1122	**SL Buf Real Rx24** Displays the floating point (real) value of the Buffered Received Data for word 24. Data transmitted from one node to another must be the same data type. This parameter is paired with Par 1121 [SL Buf Int Rx24].	Default: 0.0000 Min/Max: -/+2200000000.0000			Real
1123	**SL Buf Int Rx25** Displays the integer value of the Buffered Received Data for word 25. Data transmitted from one node to another must be the same data type. This parameter is paired with Par 1124 [SL Buf Real Rx25].	Default: 0 Min/Max: -/+2147483648			32-bit Integer
1124	**SL Buf Real Rx25** Displays the floating point (real) value of the Buffered Received Data for word 25. Data transmitted from one node to another must be the same data type. This parameter is paired with Par 1123 [SL Buf Int Rx25].	Default: 0.0000 Min/Max: -/+2200000000.0000			Real
1125	**SL Buf Int Rx26** Displays the integer value of the Buffered Received Data for word 26. Data transmitted from one node to another must be the same data type. This parameter is paired with Par 1126 [SL Buf Real Rx26].	Default: 0 Min/Max: -/+2147483648			32-bit Integer
1126	**SL Buf Real Rx26** Displays the floating point (real) value of the Buffered Received Data for word 26. Data transmitted from one node to another must be the same data type. This parameter is paired with Par 1125 [SL Buf Int Rx26].	Default: 0.0000 Min/Max: -/+2200000000.0000			Real
1127	**SL Buf Int Rx27** Displays the integer value of the Buffered Received Data for word 27. Data transmitted from one node to another must be the same data type. This parameter is paired with Par 1128 [SL Buf Real Rx27].	Default: 0 Min/Max: -/+2147483648			32-bit Integer
1128	**SL Buf Real Rx27** Displays the floating point (real) value of the Buffered Received Data for word 27. Data transmitted from one node to another must be the same data type. This parameter is paired with Par 1127 [SL Buf Int Rx27].	Default: 0.0000 Min/Max: -/+2200000000.0000			Real
1129	**SL Buf Int Rx28** Displays the integer value of the Buffered Received Data for word 28. Data transmitted from one node to another must be the same data type. This parameter is paired with Par 1130 [SL Buf Real Rx28].	Default: 0 Min/Max: -/+2147483648			32-bit Integer
1130	**SL Buf Real Rx28** Displays the floating point (real) value of the Buffered Received Data for word 28. Data transmitted from one node to another must be the same data type. This parameter is paired with Par 1129 [SL Buf Int Rx28].	Default: 0.0000 Min/Max: -/+2200000000.0000			Real
1131	**SL Buf Int Rx29** Displays the integer value of the Buffered Received Data for word 29. Data transmitted from one node to another must be the same data type. This parameter is paired with Par 1132 [SL Buf Real Rx29].	Default: 0 Min/Max: -/+2147483648			32-bit Integer

No.	Name Description	Values	Linkable	Read-Write	Data Type
1132	**SL Buf Real Rx29** Displays the floating point (real) value of the Buffered Received Data for word 29. Data transmitted from one node to another must be the same data type. This parameter is paired with Par 1131 [SL Buf Int Rx29].	Default: 0.0000 Min/Max: -/+2200000000.0000			Real
1140	**Tx Dir Data Type** Indicates the data type of each Direct Transmit word. If the word's bit is set the data type is floating point (real). If the word's bit is not set the data type is integer. Use the Peer Communication window to configure this selection.				
1141	**SL Dir Int Tx0** Provides integer data for Direct Transmit word 0, if the data type for word 0 indicated in Par 1140 [Tx Dir Data Type] is integer.	Default: 0 Min/Max: -/+2147483648	✓	✓	32-bit Integer
1142	**SL Dir Real Tx0** Provides floating point (real) data for Direct Transmit word 0, if the data type for word 0 indicated in Par 1140 [Tx Dir Data Type] is real.	Default: 0.0000 Min/Max: -/+2200000000.0000	✓	✓	Real
1143	**SL Dir Int Tx1** Provides integer data for Direct Transmit word 1, if the data type for word 1 indicated in Par 1140 [Tx Dir Data Type] is integer.	Default: 0 Min/Max: -/+2147483648	✓	✓	32-bit Integer
1144	**SL Dir Real Tx1** Provides floating point (real) data for Direct Transmit word 1, if the data type for word 1 indicated in Par 1140 [Tx Dir Data Type] is real.	Default: 0.0000 Min/Max: -/+2200000000.0000	✓	✓	Real
1145	**SL Dir Int Tx2** Provides integer data for Direct Transmit word 2, if the data type for word 2 indicated in Par 1140 [Tx Dir Data Type] is integer.	Default: 0 Min/Max: -/+2147483648	✓	✓	32-bit Integer
1146	**SL Dir Real Tx2** Provides floating point (real) data for Direct Transmit word 2, if the data type for word 2 indicated in Par 1140 [Tx Dir Data Type] is real.	Default: 0.0000 Min/Max: -/+2200000000.0000	✓	✓	Real
1147	**SL Dir Int Tx3** Provides integer data for Direct Transmit word 3, if the data type for word 3 indicated in Par 1140 [Tx Dir Data Type] is integer.	Default: 0 Min/Max: -/+2147483648	✓	✓	32-bit Integer
1148	**SL Dir Real Tx3** Provides floating point (real) data for Direct Transmit word 3, if the data type for word 3 (indicated in Par 1140 [Tx Dir Data Type]) is real.	Default: 0.0000 Min/Max: -/+2200000000.0000	✓	✓	Real
1160	**Tx Buf Data Type** Indicates the data type of each Buffered Transmit word. If the word's bit is set the data type is floating point (real). If the word's bit is not set the data type is integer. Use the Peer Communication window to configure this selection.				
1161	**SL Buf Int Tx00** Provides integer data for Direct Transmit word 0, if the data type for word 0 indicated in Par 1160 [Tx Buf Data Type] is integer.	Default: 0 Min/Max: -/+2147483648	✓	✓	32-bit Integer
1162	**SL Buf Real Tx00** Provides floating point (real) data for Direct Transmit word 0, if the data type for word 0 indicated in Par 1160 [Tx Buf Data Type] is real.	Default: 0.0000 Min/Max: -/+2200000000.0000	✓	✓	Real
1163	**SL Buf Int Tx01** Provides integer data for Direct Transmit word 1, if the data type for word 1 indicated in Par 1160 [Tx Buf Data Type] is integer.	Default: 0 Min/Max: -/+2147483648	✓	✓	32-bit Integer
1164	**SL Buf Real Tx01** Provides floating point (real) data for Direct Transmit word 1, if the data type for word 1 indicated in Par 1160 [Tx Buf Data Type] is real.	Default: 0.0000 Min/Max: -/+2200000000.0000	✓	✓	Real
1165	**SL Buf Int Tx02** Provides integer data for Direct Transmit word 2, if the data type for word 2 indicated in Par 1160 [Tx Buf Data Type] is integer.	Default: 0 Min/Max: -/+2147483648	✓	✓	32-bit Integer
1166	**SL Buf Real Tx02** Provides floating point (real) data for Direct Transmit word 2, if the data type for word 2 indicated in Par 1160 [Tx Buf Data Type] is real.	Default: 0.0000 Min/Max: -/+2200000000.0000	✓	✓	Real

Par 1140 Options:

Bit	31	30	29	28	27	26	25	24	23	22	21	20	19	18	17	16	15	14	13	12	11	10	9	8	7	6	5	4	3	2	1	0
Options	Reserved	Reserved	Reserved	Reserved	Reserved	Reserved	Reserved	Reserved	Reserved	Reserved	Reserved	Reserved	Reserved	Reserved	Reserved	Reserved	Reserved	Reserved	Reserved	Reserved	Reserved	Reserved	Reserved	Reserved	Reserved	Reserved	Reserved	Reserved	Real Tx3	Real Tx2	Real Tx1	Real Tx0
Default	0	0	0	0	0	0	0	0	0	0	0	0	0	0	0	0	0	0	0	0	0	0	0	0	0	0	0	0	0	0	0	0

0 = False
1 = True

Par 1160 Options:

Bit	31	30	29	28	27	26	25	24	23	22	21	20	19	18	17	16	15	14	13	12	11	10	9	8	7	6	5	4	3	2	1	0
Options	Reserved	Reserved	Real Tx29	Real Tx28	Real Tx27	Real Tx26	Real Tx25	Real Tx24	Real Tx23	Real Tx22	Real Tx21	Real Tx20	Real Tx19	Real Tx18	Real Tx17	Real Tx16	Real Tx15	Real Tx14	Real Tx13	Real Tx12	Real Tx11	Real Tx10	Real Tx9	Real Tx8	Real Tx7	Real Tx6	Real Tx5	Real Tx4	Real Tx3	Real Tx2	Real Tx1	Real Tx0
Default	0	0	0	0	0	0	0	0	0	0	0	0	0	0	0	0	0	0	0	0	0	0	0	0	0	0	0	0	0	0	0	0

0 = False
1 = True

No.	Name Description	Value		Linkable	Read-Write	Data Type
1167	**SL Buf Int Tx03** Provides integer data for Direct Transmit word 3, if the data type for word 3 indicated in Par 1160 [Tx Buf Data Type] is integer.	Default: Min/Max:	0 -/+2147483648	✓	✓	32-bit Integer
1168	**SL Buf Real Tx03** Provides floating point (real) data for Direct Transmit word 3, if the data type for word 3 indicated in Par 1160 [Tx Buf Data Type] is real.	Default: Min/Max:	0.0000 -/+2200000000.0000	✓	✓	Real
1169	**SL Buf Int Tx04** Provides integer data for Direct Transmit word 4, if the data type for word 4 indicated in Par 1160 [Tx Buf Data Type] is integer.	Default: Min/Max:	0 -/+2147483648	✓	✓	32-bit Integer
1170	**SL Buf Real Tx04** Provides floating point (real) data for Direct Transmit word 4, if the data type for word 4 indicated in Par 1160 [Tx Buf Data Type] is real.	Default: Min/Max:	0.0000 -/+2200000000.0000	✓	✓	Real
1171	**SL Buf Int Tx05** Provides integer data for Direct Transmit word 5, if the data type for word 5 indicated in Par 1160 [Tx Buf Data Type] is integer.	Default: Min/Max:	0 -/+2147483648	✓	✓	32-bit Integer
1172	**SL Buf Real Tx05** Provides floating point (real) data for Direct Transmit word 5, if the data type for word 5 indicated in Par 1160 [Tx Buf Data Type] is real.	Default: Min/Max:	0.0000 -/+2200000000.0000	✓	✓	Real
1173	**SL Buf Int Tx06** Provides integer data for Direct Transmit word 6, if the data type for word 6 indicated in Par 1160 [Tx Buf Data Type] is integer.	Default: Min/Max:	0 -/+2147483648	✓	✓	32-bit Integer
1174	**SL Buf Real Tx06** Provides floating point (real) data for Direct Transmit word 6, if the data type for word 6 indicated in Par 1160 [Tx Buf Data Type] is real.	Default: Min/Max:	0.0000 -/+2200000000.0000	✓	✓	Real
1175	**SL Buf Int Tx07** Provides integer data for Direct Transmit word 7, if the data type for word 7 indicated in Par 1160 [Tx Buf Data Type] is integer.	Default: Min/Max:	0 -/+2147483648	✓	✓	32-bit Integer
1176	**SL Buf Real Tx07** Provides floating point (real) data for Direct Transmit word 7, if the data type for word 7 indicated in Par 1160 [Tx Buf Data Type] is real.	Default: Min/Max:	0.0000 -/+2200000000.0000	✓	✓	Real
1177	**SL Buf Int Tx08** Provides integer data for Direct Transmit word 8, if the data type for word 8 indicated in Par 1160 [Tx Buf Data Type] is integer.	Default: Min/Max:	0 -/+2147483648	✓	✓	32-bit Integer
1178	**SL Buf Real Tx08** Provides floating point (real) data for Direct Transmit word 8, if the data type for word 8 indicated in Par 1160 [Tx Buf Data Type] is real.	Default: Min/Max:	0.0000 -/+2200000000.0000	✓	✓	Real
1179	**SL Buf Int Tx09** Provides integer data for Direct Transmit word 9, if the data type for word 9 indicated in Par 1160 [Tx Buf Data Type] is integer.	Default: Min/Max:	0 -/+2147483648	✓	✓	32-bit Integer
1180	**SL Buf Real Tx09** Provides floating point (real) data for Direct Transmit word 9, if the data type for word 9 indicated in Par 1160 [Tx Buf Data Type] is real.	Default: Min/Max:	0.0000 -/+2200000000.0000	✓	✓	Real
1181	**SL Buf Int Tx10** Provides integer data for Direct Transmit word 10, if the data type for word 10 indicated in Par 1160 [Tx Buf Data Type] is integer.	Default: Min/Max:	0 -/+2147483648	✓	✓	32-bit Integer
1182	**SL Buf Real Tx10** Provides floating point (real) data for Direct Transmit word 10, if the data type for word 10 indicated in Par 1160 [Tx Buf Data Type] is real.	Default: Min/Max:	0.0000 -/+2200000000.0000	✓	✓	Real
1183	**SL Buf Int Tx11** Provides integer data for Direct Transmit word 11, if the data type for word 11 indicated in Par 1160 [Tx Buf Data Type] is integer.	Default: Min/Max:	0 -/+2147483648	✓	✓	32-bit Integer
1184	**SL Buf Real Tx11** Provides floating point (real) data for Direct Transmit word 11, if the data type for word 11 indicated in Par 1160 [Tx Buf Data Type] is real.	Default: Min/Max:	0.0000 -/+2200000000.0000	✓	✓	Real
1185	**SL Buf Int Tx12** Provides integer data for Direct Transmit word 12, if the data type for word 12 indicated in Par 1160 [Tx Buf Data Type] is integer.	Default: Min/Max:	0 -/+2147483648	✓	✓	32-bit Integer
1186	**SL Buf Real Tx12** Provides floating point (real) data for Direct Transmit word 12, if the data type for word 12 indicated in Par 1160 [Tx Buf Data Type] is real.	Default: Min/Max:	0.0000 -/+2200000000.0000	✓	✓	Real
1187	**SL Buf Int Tx13** Provides integer data for Direct Transmit word 13, if the data type for word 13 indicated in Par 1160 [Tx Buf Data Type] is integer.	Default: Min/Max:	0 -/+2147483648	✓	✓	32-bit Integer
1188	**SL Buf Real Tx13** Provides floating point (real) data for Direct Transmit word 13, if the data type for word 13 indicated in Par 1160 [Tx Buf Data Type] is real.	Default: Min/Max:	0.0000 -/+2200000000.0000	✓	✓	Real
1189	**SL Buf Int Tx14** Provides integer data for Direct Transmit word 14, if the data type for word 14 indicated in Par 1160 [Tx Buf Data Type] is integer.	Default: Min/Max:	0 -/+2147483648	✓	✓	32-bit Integer

No.	Name Description	Value	Linkable	Read-Write	Data Type
1190	**SL Buf Real Tx14** Provides floating point (real) data for Direct Transmit word 14, if the data type for word 14 indicated in Par 1160 [Tx Buf Data Type] is real.	Default: 0.0000 Min/Max: -/+2200000000.0000	✓	✓	Real
1191	**SL Buf Int Tx15** Provides integer data for Direct Transmit word 15, if the data type for word 15 indicated in Par 1160 [Tx Buf Data Type] is integer.	Default: 0 Min/Max: -/+2147483648	✓	✓	32-bit Integer
1192	**SL Buf Real Tx15** Provides floating point (real) data for Direct Transmit word 15, if the data type for word 15 indicated in Par 1160 [Tx Buf Data Type] is real.	Default: 0.0000 Min/Max: -/+2200000000.0000	✓	✓	Real
1193	**SL Buf Int Tx16** Provides integer data for Direct Transmit word 16, if the data type for word 16 indicated in Par 1160 [Tx Buf Data Type] is integer.	Default: 0 Min/Max: -/+2147483648	✓	v	32-bit Integer
1194	**SL Buf Real Tx16** Provides floating point (real) data for Direct Transmit word 16, if the data type for word 16 indicated in Par 1160 [Tx Buf Data Type] is real.	Default: 0.0000 Min/Max: -/+2200000000.0000	✓	✓	Real
1195	**SL Buf Int Tx17** Provides integer data for Direct Transmit word 17, if the data type for word 17 indicated in Par 1160 [Tx Buf Data Type] is integer.	Default: 0 Min/Max: -/+2147483648	✓	✓	32-bit Integer
1196	**SL Buf Real Tx17** Provides floating point (real) data for Direct Transmit word 17, if the data type for word 17 indicated in Par 1160 [Tx Buf Data Type] is real.	Default: 0.0000 Min/Max: -/+2200000000.0000	✓	✓	Real
1197	**SL Buf Int Tx18** Provides integer data for Direct Transmit word 18, if the data type for word 18 indicated in Par 1160 [Tx Buf Data Type] is integer.	Default: 0 Min/Max: -/+2147483648	✓	✓	32-bit Integer
1198	**SL Buf Real Tx18** Provides floating point (real) data for Direct Transmit word 18, if the data type for word 18 indicated in Par 1160 [Tx Buf Data Type] is real.	Default: 0.0000 Min/Max: -/+2200000000.0000	✓	✓	Real
1199	**SL Buf Int Tx19** Provides integer data for Direct Transmit word 19, if the data type for word 19 indicated in Par 1160 [Tx Buf Data Type] is integer.	Default: 0 Min/Max: -/+2147483648	✓	✓	32-bit Integer
1200	**SL Buf Real Tx19** Provides floating point (real) data for Direct Transmit word 19, if the data type for word 19 indicated in Par 1160 [Tx Buf Data Type] is real.	Default: 0.0000 Min/Max: -/+2200000000.0000	✓	✓	Real
1201	**SL Buf Int Tx20** Provides integer data for Direct Transmit word 20, if the data type for word 20 indicated in Par 1160 [Tx Buf Data Type] is integer.	Default: 0 Min/Max: -/+2147483648	✓	✓	32-bit Integer
1202	**SL Buf Real Tx20** Provides floating point (real) data for Direct Transmit word 20, if the data type for word 20 indicated in Par 1160 [Tx Buf Data Type] is real.	Default: 0.0000 Min/Max: -/+2200000000.0000	✓	v	Real
1203	**SL Buf Int Tx21** Provides integer data for Direct Transmit word 21, if the data type for word 21 indicated in Par 1160 [Tx Buf Data Type] is integer.	Default: 0 Min/Max: -/+2147483648	✓	✓	32-bit Integer
1204	**SL Buf Real Tx21** Provides floating point (real) data for Direct Transmit word 21, if the data type for word 21 indicated in Par 1160 [Tx Buf Data Type] is real.	Default: 0.0000 Min/Max: -/+2200000000.0000	✓	✓	Real
1205	**SL Buf Int Tx22** Provides integer data for Direct Transmit word 22, if the data type for word 22 (indicated in Par 1160 [Tx Buf Data Type]) is integer.	Default: 0 Min/Max: -/+2147483648	✓	✓	32-bit Integer
1206	**SL Buf Real Tx22** Provides floating point (real) data for Direct Transmit word 22, if the data type for word 22 (indicated in Par 1160 [Tx Buf Data Type]) is real.	Default: 0.0000 Min/Max: -/+2200000000.0000	✓	✓	Real
1207	**SL Buf Int Tx23** Provides integer data for Direct Transmit word 23, if the data type for word 23 indicated in Par 1160 [Tx Buf Data Type] is integer.	Default: 0 Min/Max: -/+2147483648	✓	✓	32-bit Integer
1208	**SL Buf Real Tx23** Provides floating point (real) data for Direct Transmit word 23, if the data type for word 23 indicated in Par 1160 [Tx Buf Data Type] is real.	Default: 0.0000 Min/Max: -/+2200000000.0000	✓	✓	Real
1209	**SL Buf Int Tx24** Provides integer data for Direct Transmit word 24, if the data type for word 24 indicated in Par 1160 [Tx Buf Data Type] is integer.	Default: 0 Min/Max: -/+2147483648	✓	✓	32-bit Integer
1210	**SL Buf Real Tx24** Provides floating point (real) data for Direct Transmit word 24, if the data type for word 24 indicated in Par 1160 [Tx Buf Data Type] is real.	Default: 0.0000 Min/Max: -/+2200000000.0000	✓	✓	Real
1211	**SL Buf Int Tx25** Provides integer data for Direct Transmit word 25, if the data type for word 25 indicated in Par 1160 [Tx Buf Data Type] is integer.	Default: 0 Min/Max: -/+2147483648	✓	✓	32-bit Integer
1212	**SL Buf Real Tx25** Provides floating point (real) data for Direct Transmit word 25, if the data type for word 25 indicated in Par 1160 [Tx Buf Data Type] is real.	Default: 0.0000 Min/Max: -/+2200000000.0000 Comm Scale: x 1	✓	✓	Real

No.	Name Description	Value	Linkable	Read-Write	Data Type
1213	**SL Buf Int Tx26** Provides integer data for Direct Transmit word 26, if the data type for word 26 indicated in Par 1160 [Tx Buf Data Type] is integer.	Default: 0 Min/Max: -/+2147483648	✓	✓	32-bit Integer
1214	**SL Buf Real Tx26** Provides floating point (real) data for Direct Transmit word 26, if the data type for word 26 indicated in Par 1160 [Tx Buf Data Type] is real.	Default: 0.0000 Min/Max: -/+2200000000.0000	✓	✓	real
1215	**SL Buf Int Tx27** Provides integer data for Direct Transmit word 27, if the data type for word 27 indicated in Par 1160 [Tx Buf Data Type] is integer.	Default: 0 Min/Max: -/+2147483648	✓	✓	32-bit Integer
1216	**SL Buf Real Tx27** Provides floating point (real) data for Direct Transmit word 27, if the data type for word 27 indicated in Par 1160 [Tx Buf Data Type] is real.	Default: 0.0000 Min/Max: -/+2200000000.0000	✓	✓	Real
1217	**SL Buf Int Tx28** Provides integer data for Direct Transmit word 28, if the data type for word 28 indicated in Par 1160 [Tx Buf Data Type] is integer.	Default: 0 Min/Max: -/+2147483648	✓	✓	32-bit Integer
1218	**SL Buf Real Tx28** Provides floating point (real) data for Direct Transmit word 28, if the data type for word 28 indicated in Par 1160 [Tx Buf Data Type] is real.	Default: 0.0000 Min/Max: -/+2200000000.0000	✓	✓	Real
1219	**SL Buf Int Tx29** Provides integer data for Direct Transmit word 29, if the data type for word 29 indicated in Par 1160 [Tx Buf Data Type] is integer.	Default: 0 Min/Max: -/+2147483648	✓	✓	32-bit Integer
1220	**SL Buf Real Tx29** Provides floating point (real) data for Direct Transmit word 29, if the data type for word 29 indicated in Par 1160 [Tx Buf Data Type] is real.	Default: 0.0000 Min/Max: -/+2200000000.0000	✓	✓	Real
1226	**SL Comm TP Sel** Enter or write a value to select SynchLink data displayed by Par 1227 [SL Comm TP Data].	Default: 0 "Zero" Options: 0 "Zero" 1 "SL MultA Src" 2 "SL Mult A In" 3 "SL Mult B In" 4 "SL Mult Out" 5 "Rx Axis Size" 6 "Rx Dir Size" 7 "Rx Buf Size" 8 "Rx Pkg Size" 9 "Rx Seq Cnt" 10 "Rx Index 0" 11 "Rx Index 1" 12 "Rx Index 2" 13 "BufSeqErrTim" 14 "Rx Sys Rev" 15 "Tx Axis Size" 16 "Tx Dir Size" 17 "Tx Buf Size" 18 "Tx Pkg Size" 19 "Tx Seq Cnt" 20 "Tx Index 0" 21 "Tx Index 1" 22 "Tx Index 2" 23 "Rx Vendor ID" 24 "Rx ModuleTyp" 25 "Rx Serial #"			
1227	**SL Comm TP Data** Displays data selected by Par 1226 [SL Comm TP Sel].	Default: 0 Min/Max: -/+2147483648			32-bit Integer

1228 SL Error History

Displays SynchLink faults which have occurred since the last fault clear operation or power cycle.

- Bit 0 [Sync Loss] indicates SynchLink communication has failed, after it had been established
- Bit 1 [Rx Loss] indicates the receive port is not receiving data, and the receive port configuration is set to receive data
- Bit 2 [Many BOF Err] indicates the number of Beginning Of Frame (BOF) errors exceeds limit set by Par 1235 [SL BOF Err Limit]
- Bit 3 [Many CRC Err] indicates the number of Cyclic Redundancy Check (CRC) errors exceeds limit set by Par 1234 [SL CRC Err Limit]
- Bit 4 [Pckg Msg Err] indicates the received package sequence number has not matched for 1.0S
- Bit 5 [CommForm Err] indicates the format of received data does not match the configuration of the receive port
- Bit 6 [Sys Rev Err] indicates the system revision in the received data does not match the value of Par 1001 [SynchLink Rev]
- Bit 7 [Mult TKeeper] indicates more than one node on the SynchLink system is configured as a time keeper

Options	Reserved	Reserved	Reserved	Reserved	Reserved	Reserved	Reserved	Reserved	Mult TKeeper	Sys Rev Err	CommForm Err	Pckg Msg Err	Many CRC Err	Many BOF Err	Rx Loss	Sync Loss
Default	0	0	0	0	0	0	0	0	0	0	0	0	0	0	0	0
Bit	15	14	13	12	11	10	9	8	7	6	5	4	3	2	1	0

0 = True
1 = False

No.	Name Description	Value	Linkable	Read-Write	Data Type
1229	**SL Error Status** Indicates presence of SynchLink faults. This data is visible on the SynchLink diagnostics tab of the Peer Communication window. • Bit 0 [Sync Loss] indicates SynchLink communication has failed, after it had been established • Bit 1 [Rx Loss] indicates the receive port is not receiving data, and the receive port configuration is set to receive data • Bit 2 [Many BOF Err] indicates the number of Beginning Of Frame (BOF) errors exceeds limit set by Par 1235 [SL BOF Err Limit] • Bit 3 [Many CRC Err] indicates the number of Cyclic Redundancy Check (CRC) errors exceeds limit set by Par 1234 [SL CRC Err Limit] • Bit 4 [Pckg Msg Err] indicates the received package sequence number has not matched for 1.0S • Bit 5 [CommForm Err] indicates the format of received data does not match the configuration of the receive port • Bit 6 [Sys Rev Err] indicates the system revision in the received data does not match the value of Par 1001 [SynchLink Rev] • Bit 7 [Mult TKeeper] indicates more than one node on the SynchLink system is configured as a time keeper				
1230	**SL CRC Err Accum** Displays the total accumulated number of CRC errors. Clearing a CRC fault resets this accumulator. This data is visible on the SynchLink diagnostics tab of the Peer Communication window.	Default: 0 Min/Max: 0/4294967296			32-bit Integer
1231	**SL CRC Error** Displays the number of CRC errors that occurred during the last test (last 8 mS). This data is visible on the SynchLink diagnostics tab of the Peer Communication window.	Default: 0 Min/Max: 0/4294967296			32-bit Integer
1232	**SL BOF Err Accum** Displays the total accumulated number of BOF errors. Clearing a BOF fault resets this accumulator. This data is visible on the SynchLink diagnostics tab of the Peer Communication window.	Default: 0 Min/Max: 0/4294967296r			32-bit Integer
1233	**SL BOF Error** Displays the number of BOF errors that occurred during the last test (last 8 mS). This data is visible on the SynchLink diagnostics tab of the Peer Communication window.	Default: 0 Min/Max: 0/4294967296			32-bit Integer
1234	**SL CRC Err Limit** The number of CRC errors per test (per 8 mS) allowed before the drive declares a SynchLink CRC Error exception event. Set this limit on the SynchLink diagnostics tab of the Peer Communication window.	Default: 2 Min/Max: 0/256			32-bit Integer
1235	**SL BOF Err Limit** The number of BOF errors per test (per 8 mS) allowed before the drive declares a SynchLink BOF Error exception event. Set this limit on the SynchLink diagnostics tab of the Peer Communication window.	Default: 2 Min/Max: 0/256			32-bit Integer
1250	**Trend Control** Set bits to configure the Data Trend function: • Bit 0 [Enbl Collect] - Trend data collection begins on the rising edge of this bit and continues until either this bit is set low or the trend data has been completely collected. This bit should be cleared following either the 'Triggered' status or 'Complete' status (bit 1 and 2, respectively, in Par 1251 [Trend Status]) in order to complete the trend sequence. This bit can also be cleared at any time to force the trend data sampling to stop and set the 'Complete' status bit. • Setting bit 1 [In1 Real] - specifies the Real data type for Trend Input 1. The source for Real data is Par 1265 [Trend In1 Real]. Clearing the bit specifies the Integer data type. The source for Integer data is Par 1264 [Trend In1 Int]. • Setting bit 2 [In2 Real] - specifies the Real data type for Trend Input 2. The source for Real data is Par 1267 [Trend In2 Real]. Clearing the bit specifies the Integer data type. The source for Integer data is Par 1266 [Trend In2 Int]. • Setting bit 3 [In3 Real] - specifies the Real data type for Trend Input 3. The source for Real data is Par 1269 [Trend In3 Real]. Clearing the bit specifies the Integer data type. The source for Integer data is Par 1268 [Trend In3 Int]. • Setting bit 4 [In4 Real] - specifies the Real data type for Trend Input 4. The source for Real data is Par 1271 [Trend In4 Real]. Clearing the bit specifies the Integer data type. The source for Integer data is Par 1270 [Trend In4 Int]. • Setting bit 15 [Auto Output] causes the trend output parameters to automatically cycle through the entire trend buffer at the rate specified in Par 1253 [Trend Rate]. Typically, you link the output to an analog output for display on an oscilloscope. • Auto output is accomplished by writing to Par 1283 [TrendBuffPointer]. Clearing this bit requires manual selection of Par 1283 [TrendBuffPointer] to view the trend buffer contents.				

Bit 1229:

Options	Reserved	Reserved	Reserved	Reserved	Reserved	Reserved	Reserved	Reserved	Mult TKeeper	Sys Rev Err	CommForm Err	Pckg Msg Err	Many CRC Err	Many BOF Err	Rx Loss	Sync Loss
Default	0	0	0	0	0	0	0	0	0	0	0	0	0	0	0	0
Bit	15	14	13	12	11	10	9	8	7	6	5	4	3	2	1	0

0 = False
1 = True

Bit 1250:

Options	Auto Output	Reserved	Reserved	Reserved	Reserved	Reserved	Reserved	Reserved	Reserved	Reserved	Reserved	In 4 Real	In 3 Real	In 2 Real	In 1 Real	Enbl Collect
Default	0	0	0	0	0	0	0	0	0	0	0	0	0	0	0	0
Bit	15	14	13	12	11	10	9	8	7	6	5	4	3	2	1	0

0 = False
1 = True

No.	Name Description	Value	Linkable	Read-Write	Data Type
1251	**Trend Status** Bits indicate the status of the Data Trend function: • Bit 1 [Triggered] indicates a Trend Trigger event has been detected. This bit will clear in response to the rise of Par 1250 [Trend Control], bit 0 [Enbl Collect]. • Bit 2 [Complete] indicates all the post trigger data samples have been gathered and the trend buffers are full. It will also be set if the Par 1250 [Trend Control], bit 0 [Enbl Collect] is cleared before the trigger occurs. The trend data outputs will be updated from the contents of the trend buffer data when this bit is set. Par 1250 [Trend Control], bit 0 [Enbl Collect] can be cleared after this bit is set without affecting the trend data buffer contents. This bit will clear in response to the rise of Par 1250 [Trend Control], bit 0 [Enbl Collect]. The trend outputs will be forced to zero while this bit is clear. Options: Reserved, Reserved, Reserved, Reserved, Reserved, Reserved, Reserved, Reserved, Reserved, Reserved, Reserved, Reserved, Reserved, Complete, Triggered, Reserved Default: 0 0 0 0 0 0 0 0 0 0 0 0 0 0 0 0 Bit: 15 14 13 12 11 10 9 8 7 6 5 4 3 2 1 0 0 = False 1 = True				
1252	**Trend State** Value indicates the state of the Data Trend function. • 0 “Wait Enable” - indicates the trend function is ready and waiting to begin data collection. Setting bit 0 [Enbl Collect] of Par1250 [Trend Control] will cause data collection to begin. In this state, Par 1283 [TrendBuffPointer] and the Trend Output parameters are active. • 1 “First Scan” - indicates the Trend function is executing the first pass through the trend sample buffer. This takes 512 ms. (0.5 ms x 1024 samples). When it enters this state, the Trend function clears bit 1 [Triggered] and bit 2 [Complete] of Par 1251 [Trend Status]. While in this state, the Trend function refreshes the data. Also while in this state, the function forces the Trend Output parameters to zero. When done, it enters the Pre-trigger state. • 2 “Pre-trigger” - indicates the Trend function is sampling the trend inputs and storing them in memory, at a rate determined by parameter 1253 [Trend Rate]. Sampling continues until either the trend trigger event occurs or bit 0 [Enbl Collect] of Par 1250 [Trend Control] is cleared. While in this state, the Trend function forces the Trend Output parameters to zero. If the trigger event occurs, the function sets bit 1 [Triggered] of Par 1251 [Trend Status] and enters the Post-trigger state. If bit 0 [Enbl Collect] of Par 1250 [Trend Control] is cleared, the function sets bit 2 [Complete] of Par 1251 [Trend Status] and returns to the Wait Enable state. • 3 “Post-trigger” indicates the Trend function is continuing to sample and save the trend inputs until the buffer is full. While in this state, the function forces the Trend Output parameters to zero. When the buffer is full, the function sets bit 2 [Complete] of Par 1251 [Trend Status] and enters the Wait Disable state. • 4 “Wait Disable” - indicates the Trend function is complete and waiting for bit 0 [Enbl Collect] of Par 1250 [Trend Control] to be cleared. When this is done, the trend function returns to the Wait Enable state. While in the Wait Disable state, Par 1283 [TrendBuffPointer] and the Trend Output Parameters are active.	Default: 0 “Wait Enable” Options: 0 “Wait Enable” 1 “First Scan” 2 “Pre-trigger” 3 “Post-trigger” 4 “Wait Disable” 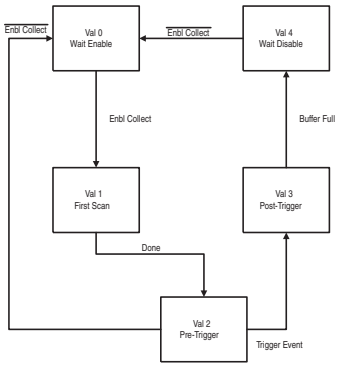 			
1253	**Trend Rate** Sets the sample time for both trend input and output updates.	Units: mSec Default: 0.5000 Min/Max: 0.5000/1000.0000l	✓	✓	Real
1254	**Trend TrigA Int** Provides the integer input for the A trigger function. This integer is converted to a real number and summed with Par 1255 [Trend TrigA Real]. The result is compared with the Trigger B sum. If the A sum exceeds the B sum, then a trend trigger will occur.	Default: 0 Min/Max: -/+2147483648	✓	✓	32-bit Integer
1255	**Trend TrigA Real** Provides the real input for the A trigger function. This real number is summed with Par 1254 [Trend TrigA Int]. The result is compared with the Trigger B sum. If the A sum exceeds the B sum, then a trend trigger will occur.	Default: 0.0000 Min/Max: -/+2200000000.0000	✓	✓	Real
1256	**Trend TrigB Int** Provides the integer input for the B trigger function. This integer is converted to a real number and summed with Par 1257 [Trend TrigB Real]. The result is compared with the Trigger A sum. If the A sum exceeds the B sum, then a trend trigger will occur.	Default: 0 Min/Max: -/+2147483648	✓	✓	32-bit Integer
1257	**Trend TrigB Real** Provides the real input for the B trigger function. This real number is summed with Par 1257 [Trend TrigB Real]. The result is compared with the Trigger A sum. If the A sum exceeds the B sum, then a trend trigger will occur.	Default: 0.0000 Min/Max: -/+2200000000.0000	✓	✓	Real
1258	**Trend Trig Data** This is the logic input for the Trend Trigger Function. A trigger will occur on the rise of the specified bit in this word. The bit will be specified by Par 1259 [Trend Trig Bit].	Default: 00000000000000000000000000000000 Min: 00000000000000000000000000000000 Max: 11111111111111111111111111111111	✓	✓	32-bit Boolean
1259	**Trend Trig Bit** Specifies the bit in Par 1258 [Trend Trig Data] that will cause a Trend Trigger to occur. Positive numbers specify rising edges and negative numbers specify falling edges.	Default: 0 Min/Max: -32/31	✓	✓	16-bit Integer
1260	**Trend PreSamples** Specifies the number of pre-trigger samples in the trend buffer. Pre-trigger samples are the samples that occur before the trigger and remain in the buffer. The remainder of the trend buffer will contain post-trigger samples.	Default: 511 Min/Max: 0/1022 j	✓	✓	16-bit Integer
1264	**Trend In1 Int** Provides integer input to the Trend 1 function. The Trending function samples this parameter for Trend Buffer 1, if bit 1 [In 1 Real] of Par 1250 [Trend Control] is cleared.	Default: 0 Min/Max: -/+2147483648	✓	✓	32-bit Integer

No.	Name Description	Value		Linkable	Read-Write	Data Type
1265	**Trend In1 Real** Provides real input to the Trend 1 function. The Trending function samples this parameter for Trend Buffer 1, if bit 1 [In 1 Real] of Par 1250 [Trend Control] is set.	Default: Min/Max:	0.0000 -/+2200000000.0000	✓	✓	Real
1266	**Trend In2 Int** Provides integer input to the Trend 2 function. The Trending function samples this parameter for Trend Buffer 2, if bit 2 [In 2 Real] of Par 1250 [Trend Control] is cleared.	Default: Min/Max:	0 -/+2147483648	✓	✓	32-bit Integer
1267	**Trend In2 Real** Provides real input to the Trend 2 function. The Trending function samples this parameter for Trend Buffer 2, if bit 2 [In 2 Real] of Par 1250 [Trend Control] is set.	Default: Min/Max:	0.0000 -/+2200000000.0000	✓	✓	Real
1268	**Trend In3 Int** Provides integer input to the Trend 3 function. The Trending function samples this parameter for Trend Buffer 3, if bit 3 [In 3 Real] of Par 1250 [Trend Control] is cleared.	Default: Min/Max:	0 -/+2147483648	✓	✓	32-bit Integer
1269	**Trend In3 Real** Provides real input to the Trend 3 function. The Trending function samples this parameter for Trend Buffer 3, if bit 3 [In 3 Real] of Par 1250 [Trend Control] is set.	Default: Min/Max:	0.0000 -/+2200000000.0000	✓	✓	Real
1270	**Trend In4 Int** Provides integer input to the Trend 4 function. The Trending function samples this parameter for Trend Buffer 4, if bit 4 [In 4 Real] of Par 1250 [Trend Control] is cleared.	Default: Min/Max:	0 -/+2147483648	✓	✓	32-bit Integer
1271	**Trend In4 Real** Provides real input to the Trend 4 function. The Trending function samples this parameter for Trend Buffer 4, if bit 4 [In 4 Real] of Par 1250 [Trend Control] is set.	Default: Min/Max:	0.0000 -/+2200000000.0000	✓	✓	Real
1280	**Trend Marker Int** Marks the start of data for trend buffers that are using integer data. The Trend Marker can be used to provide a scope trigger signal for the Auto Output function.	Default: Min/Max:	0 -/+2147483648	✓	✓	32-bit Integer
1281	**Trend Marker Real** Marks the start of data for trend buffers that are using real data. The Trend Marker can be used to provide a scope trigger signal for the Auto Output function.	Default: Min/Max:	0.0000 -/+2200000000.0000	✓	✓	Real
1283	**TrendBuffPointer** Selects the trend buffer element to be displayed in the Trend Output Parameters when the trend function is inactive (not collecting data samples). A zero value points to the element that corresponds to the trigger event. Negative values point to pre-trigger data. Positive values point to post-trigger data. When the Auto Output function is running, this parameter will automatically sequence through it's full range, at a rate set by Par 1253 [Trend Rate].	Default: Min/Max:	0 -/+1023	✓	✓	16-bit Integer
1284	**Trend Out1 Int** Displays the output for Trend Buffer 1, if the buffer is using integer data. This will equal the value of the element, in Trend Buffer 1, specified by Par 1283 [TrendBuffPointer].	Default: Min/Max:	0 -/+2147483648			32-bit Integer
1285	**Trend Out1 Real** Displays the output for Trend Buffer 1, if the buffer is using real data. This will equal the value of the element, in Trend Buffer 1, specified by Par 1283 [TrendBuffPointer].	Default: Min/Max:	0.0000 -/+2200000000.0000			Real
1286	**Trend Out2 Int** Displays the output for Trend Buffer 2, if the buffer is using integer data. This will equal the value of the element, in Trend Buffer 2, specified by Par 1283 [TrendBuffPointer].	Default: Min/Max:	0 -/+2147483648			32-bit Integer
1287	**Trend Out2 Real** Displays the output for Trend Buffer 2, if the buffer is using real data. This will equal the value of the element, in Trend Buffer 2, specified by Par 1283 [TrendBuffPointer].	Default: Min/Max:	0.0000 -/+2200000000.0000			Real
1288	**Trend Out3 Int** Displays the output for Trend Buffer 3, if the buffer is using integer data. This will equal the value of the element, in Trend Buffer 3, specified by Par 1283 [TrendBuffPointer].	Default: Min/Max:	0 -/+2147483648			32-bit Integer
1289	**Trend Out3 Real** Displays the output for Trend Buffer 3, if the buffer is using real data. This will equal the value of the element, in Trend Buffer 3, specified by Par 1283 [TrendBuffPointer].	Default: Min/Max:	0.0000 -/+2200000000.0000			Real
1290	**Trend Out4 Int** Displays the output for Trend Buffer 4, if the buffer is using integer data. This will equal the value of the element, in Trend Buffer 4, specified by Par 1283 [TrendBuffPointer].	Default: Min/Max:	0 -/+2147483648			32-bit Integer
1291	**Trend Out4 Real** Displays the output for Trend Buffer 4, if the buffer is using real data. This will equal the value of the element, in Trend Buffer 4, specified by Par 1283 [TrendBuffPointer].	Default: Min/Max:	0 -/+2200000000.0000			Real
1300	**User Data Int 05** General purpose parameter available for storage of 32-bit enumerated data by the operator. This value will be retained through a power cycle.	Default: Min/Max:	0 -/+2147483648	✓	✓	32-bit Integer
1301	**User Data Int 06** General purpose parameter available for storage of 32-bit enumerated data by the operator. This value will be retained through a power cycle.	Default: Min/Max:	0 -/+2147483648	✓	✓	32-bit Integer
1315	**User Data Real 01** General purpose parameter available for storage of real data by the operator. This value will be retained through a power cycle.	Default: Min/Max:	0.0000 -/+2200000000.0000			Real
1316	**User Data Real 02** General purpose parameter available for storage of real data by the operator. This value will be retained through a power cycle.	Default: Min/Max:	0.0000 -/+2200000000.0000			Real

No.	Name Description	Value	Linkable	Read-Write	Data Type
1317	**User Data Real 03** General purpose parameter available for storage of real data by the operator. This value will be retained through a power cycle.	Default: 0.0000 Min/Max: -/+2200000000.0000			Real
1318	**User Data Real 04** General purpose parameter available for storage of real data by the operator. This value will be retained through a power cycle.	Default: 0.0000 Min/Max: -/+2200000000.0000			Real
1319	**User Data Real 05** General purpose parameter available for storage of real data by the operator. This value will be retained through a power cycle.	Default: 0.0000 Min/Max: -/+2200000000.0000			Real
1320	**User Data Real 06** General purpose parameter available for storage of real data by the operator. This value will be retained through a power cycle.	Default: 0.0000 Min/Max: -/+2200000000.0000			Real
1370	**Switch Control** Set bits to control the two software SPDT switches. • Bit 1 [SW Int 1 On] controls the integer switch. Setting bit 1 moves the value from Par 1371 [SW Int 1 NO] into Par 1373 [SW Int 1 Output]. Resetting this bit moves the value of Par 1372 [SW Int 1 NC] into Par 1373 [SW Int 1 Output]. • Bit 2 [SW Real 1 On] controls the real switch. Setting bit 2 moves the value from Par 1374 [SW Real 1 NO] into Par 1376 [SW Real 1 Output]. Resetting this bit moves the value of Par 1375 [SW Real 1 NC] into Par 1376 [SW Real 1 Output].				
1371	**SW Int 1 NO** The integer switch moves the value of this parameter into Par 1373 [SW Int 1 Output] when bit 0 [SW Int 1 On] of Par 1370 [Switch Control] is set.	Default: 0 Min/Max: -/+2147483648	✓	✓	32-bit Integer
1372	**SW Int 1 NC** The integer switch moves the value of this parameter into Par 1373 [SW Int 1 Output] when bit 0 [SW Int 1 On] of Par 1370 [Switch Control] is reset.	Default: 0 Min/Max: -/+2147483648	✓	✓	32-bit Integer
1373	**SW Int 1 Output** Displays the output of the integer switch. It will reflect the value of either Par 1371 [SW Int 1 NO] or 1372 [SW Int 1 NC].	Default: 0 Min/Max: -/+2147483648	✓	✓	32-bit Integer
1374	**SW Real 1 NO** The real switch moves the value of this parameter into Par 1376 [SW Real 1 Output] when bit 0 [SW Int 1 On] of Par 1370 [Switch Control] is set.	Default: 0.0000 Min/Max: -/+2200000000.0000			Real
1375	**SW Real 1 NC** The real switch moves the value of this parameter into Par 1376 [SW Real 1 Output] when bit 0 [SW Int 1 On] of Par 1370 [Switch Control] is reset.	Default: 0.0000 Min/Max: -/+2200000000.0000			Real
1376	**SW Real 1 Output** Displays the output of the real switch. It will reflect the value of either Parameter 1374 [SW Real 1 NO] or 1375 [SW Real 1 NC].	Default: 0.0000 Min/Max: -/+2200000000.0000			Real

Options	Reserved	Reserved	Reserved	Reserved	Reserved	Reserved	Reserved	Reserved	Reserved	Reserved	Reserved	Reserved	Reserved	SW Real 1 On	SW Int 1 On	Reserved
Default	0	0	0	0	0	0	0	0	0	0	0	0	0	0	0	0
Bit	15	14	13	12	11	10	9	8	7	6	5	4	3	2	1	0

0 = False
1 = True

Parameter Cross Reference By Name

Name	Number
% Motor Flux	309
Abs OverSpd Lim	335
Abs Posit Offset	757
Accel Time	32
Act Motor Posit	763
Act Spd Reg BW	97
AI 1 Filt Gain	804
AI 2 Filt Gain	810
Alarm Status 1	326
Alarm Status 2	327
Anlg In1 Data	800
Anlg In1 Filt BW	805
Anlg In1 Offset	803
Anlg In1 Scale	802
Anlg In1 Volts	801
Anlg In2 Data	806
Anlg In2 Filt BW	811
Anlg In2 Offset	809
Anlg In2 Scale	808
Anlg In2 Volts	807
Anlg Out1 Offset	812
Anlg Out1 Real	815
Anlg Out1 Scale	817
Anlg Out1 Volts	816
Anlg Out1 Zero	818
Anlg Out2 Offset	813
Anlg Out2 Real	820
Anlg Out2 Scale	822
Anlg Out2 Volts	821
Anlg Out2 Zero	823
AnlgOut1 Integer	814
AnlgOut2 Integer	819
Applied LogicCmd	152
Atune Spd Ref	19
Atune Torq Ref	129
Aux Posit Ref	743
Brake OL Cnfg	369
Brake PulseWatts	416
Brake TP Data	419
Brake TP Sel	418
Brake Watts	417
Brake/Bus Cnfg	414
Bus Util Limit	500
BusReg/Brake Ref	415
BusUndervoltCnfg	393
Control Options	153
Curr Ref TP Data	364
Curr Ref TP Sel	363
Current Reg BW	503
Data In A1 Int	707
Data In A1 Real	708
Data In A2 Int	709
Data In A2 Real	710
Data In B1 Int	711
Data In B1 Real	712
Data In B2 Int	713
Data In B2 Real	714
Data In C1 Int	715
Data In C1 Real	716

Name	Number
Data In C2 Int	717
Data In C2 Real	718
Data In D1 Int	719
Data In D1 Real	720
Data In D2 Int	721
Data In D2 Real	722
Data Out A1 Int	724
Data Out A1 Real	725
Data Out A2 Int	726
Data Out A2 Real	727
Data Out B1 Int	728
Data Out B1 Real	729
Data Out B2 Int	730
Data Out B2 Real	731
Data Out C1 Int	732
Data Out C1 Real	733
Data Out C2 Int	734
Data Out C2 Real	735
Data Out D1 Int	736
Data Out D1 Real	737
Data Out D2 Int	738
Data Out D2 Real	739
DC Bus Voltage	306
Dead Time	404
Dead Time Comp	405
Decel Time	33
Delayed Spd Ref	45
DeltaSpeedScale	60
DigIn ConfigStat	159
DigIn1 Bit	827
DigIn1 Data	826
DigIn1 Debounce	829
DigIn1 Sel	838
DigIn1 User Data	828
DigIn2 Bit	831
DigIn2 Data	830
DigIn2 Debounce	833
DigIn2 Sel	839
DigIn2 User Data	832
DigIn3 Bit	835
DigIn3 Data	834
DigIn3 Debounce	837
DigIn3 Sel	840
DigIn3 User Data	836
DigOut 1 Bit	844
DigOut 1 Data	843
DigOut 2 Bit	846
DigOut 2 Data	845
Direction Mask	696
Direction Owner	703
DLink OutDataTyp	723
DPI Baud Rate	692
DPI CommLoss Cfg	391
DPI Ref Select	691
Drive Logic Rslt	158
Drive OL JnctTmp	345
Drive OL Status	346
Drive OL TP Data	348
Drive OL TP Sel	347
Elapsed MWHrs	299
Elapsed Run Time	298
En In Debounce	825

Name	Number
Encdr0 Config	233
Encdr0 Error	234
Encdr0 Loss Cnfg	365
Encdr0 Position	230
Encdr0 Spd Fdbk	231
Encdr1 Config	243
Encdr1 Error	244
Encdr1 Loss Cnfg	366
Encdr1 Position	240
Encdr1 Spd Fdbk	241
Encoder0 PPR	232
Encoder1 PPR	242
Est Speed Fdbk	548
Est Theta Delay	477
Exception Event1	320
Exception Event2	321
Ext Flt/Alm Cnfg	379
Fault Clr Mask	697
Fault Clr Owner	704
Fault Status 1	323
Fault Status 2	324
Fault TP Data	330
Fault TP Sel	329
FB Opt0 Posit	250
FB Opt0 Spd Fdbk	251
FB Opt1 LossCnfg	368
FB Opt1 Posit	276
FB Opt1 Spd Fdbk	277
Fdbk Option ID	249
Filtered Spd Ref	44
Filtered SpdFdbk	71
Flux Current	488
Flux Rate Limit	425
Flux Ratio Ref	424
Flux Reg I Gain	444
Flux Reg P Gain1	443
Flux Reg P Gain2	470
Flx LpassFilt BW	361
FOC Mode Config	510
FOC2 Mode Config	511
Freq Reg FF Gain	473
Freq Reg I Gain	449
Freq Reg P Gain	450
Freq Reg We BW	474
Freq Reg Wr BW	475
FricComp Rated	144
FricComp Setup	141
FricComp Slip	143
FricComp Spd Ref	140
FricComp Stick	142
FricComp TorqAdd	145
Fwd Speed Limit	31
Heatsink Temp	313
Hi Res0 Config	259
Hi Res0 Status	260
Hi Res0 TP Data	262
Hi Res0 TP Sel	261
Ids Command	537
Ids Feedback	540
Ids Integ Freq	429
Ids Reg P Gain	430
In Posit BW	782

Name	Number
In Posit Dwell	783
Inertia SpeedRef	56
Inertia Torq Add	59
InertiaAccelGain	57
InertiaDecelGain	58
Integer In00	600
Integer In01	602
Integer In02	604
Integer In03	606
Integer In04	608
Integer In05	610
Integer In06	612
Integer In07	614
Integer In08	616
Integer In09	618
Integer In10	620
Integer In11	622
Integer In12	624
Integer In13	626
Integer In14	628
Integer In15	630
Integer Out00	632
Integer Out01	634
Integer Out02	636
Integer Out03	638
Integer Out04	640
Integer Out05	642
Integer Out06	644
Integer Out07	646
Integer Out08	648
Integer Out09	650
Integer Out10	652
Integer Out11	654
Integer Out12	656
Integer Out13	658
Integer Out14	660
Integer Out15	662
Inv OL Pend Cnfg	376
Inv OL Trip Cnfg	377
Inv OT Pend Cnfg	375
Iq Actual Lim	353
Iq Actual Ref	350
Iq Rate Limit	354
Iq Rate Limited	355
Iq Ref Limited	358
Iq Ref Trim	351
Iqs Command	535
Iqs Feedback	539
Iqs Integ Freq	421
Iqs Rate Limit	423
Iqs Reg P Gain	422
Is Actual Lim	352
Iu Offset	453
Iw Offset	454
Jog Mask	695
Jog Owner	702
Jog Speed 1	17
Jog Speed 2	18
Leak Inductance	492
Lgx Closed Cnfg	388
Lgx Comm Format	664
Lgx CommLossData	385

Name	Number
Lgx LinkChngCnfg	389
Lgx OutOfRunCnfg	386
Lgx Timeout Cnfg	387
LimGen X axis In	206
LimGen Y axis Mn	205
LimGen Y axis Mx	204
Limit Gen Hi Out	207
Limit Gen Lo Out	208
Limit Status	304
Limited Spd Ref	41
Lin1 Update Rate	289
Line Undervolts	409
Linear1 CPR	290
Linear1 Status	286
Linear1 TP Data	288
Linear1 TP Sel	287
Load Estimate	221
Local I/O Status	824
Logic Command	151
Logic Ctrl State	157
Logic Mask	693
Logic State Mach	150
Logic Status	155
Logic TP Data	162
Logic TP Sel	161
MC Build Number	526
MC Cmd Lim Cnfg	382
MC Diag Done	551
MC Diag Error 1	552
MC Diag Error 2	553
MC Diag Error 3	554
MC Diag Status	550
MC Firmware Rev	527
MC Status	555
MC TP Bit	546
MC TP Select	544
MC TP Value	545
Min Flux	360
Motor Ctrl Ackn	167
Motor Ctrl Cmmd	166
Motor Ctrl Mode	485
Motor Fdbk Sel	222
Motor Inertia	8
Motor NP FLA	2
Motor NP Hertz	3
Motor NP Power	5
Motor NP RPM	4
Motor NP Volts	1
Motor NTC Coef	487
Motor Poles	7
Motor Spd Est	74
Motor Spd Fdbk	300
Motor Speed Ref	301
Motor Stall Cnfg	374
Motor Stall Time	373
Motor Torque Ref	303
MotorFluxCurr FB	312
Mtr Current Lim	356
Mtr I2T Calibrat	339
Mtr I2T Curr Min	337
Mtr I2T Spd Min	338
Mtr I2T Trp ThrH	340

Name	Number
Mtr NP Pwr Units	6
Mtr OL Pend Cnfg	372
Mtr OL Trip Cnfg	371
Mtr Posit Fdbk	762
Mtr TorqCurr Ref	305
Mtr Vds Base	434
Mtr Vqs Base	435
Mtring Power Lim	127
MtrSpd Est Posit	75
MtrSpd Sim Posit	70
MtrSpd Simulated	76
NetLoss DPI Cnfg	392
Notch Filt Freq	118
Notch Filt Mode	117
OL ClsLp CurrLim	344
OL OpnLp CurrLim	343
Opt 0 Regis Cnfg	254
Opt 0 Regis Ctrl	255
Opt 0 Regis Ltch	253
Opt 0 Regis Stat	256
Opt 1 Regis Cnfg	280
Opt 1 Regis Ctrl	281
Opt 1 Regis Ltch	279
Opt 1 Regis Stat	282
Output Curr Disp	297
Output Current	308
Output Freq	310
Output Power	311
Output Voltage	307
ParamAccessLevel	850
Peak Ctrl Status	211
PeakDetect1 Out	215
PeakDetect2 Out	219
PeakDtct Ctrl In	210
PeakDtct1 In Int	212
PeakDtct1 Preset	214
PeakDtct2 In Int	216
PeakDtct2 Preset	218
PI Command	183
PI Feedback	182
PI High Limit	191
PI Integ HLim	188
PI Integ LLim	189
PI Integ Output	190
PI Integ Time	187
PI Lower Limit	192
PI Lpass Filt BW	184
PI Output	180
PI Preload	185
PI Prop Gain	186
PI Reference	181
PI TP Data	194
PI TP Sel	193
PkDtct1 In Real	213
PkDtct2 In Real	217
PM AbsEncd Offst	504
PM D Inductance	521
PM Mtr CEMF Coef	523
PM Mtr CEMF Comp	427
PM Q Inductance	520
PM Stator Resist	522
PM Test Freq Ref	508

Name	Number
PM Test FreqRamp	507
PM Test I Ref	509
PM Test Idc Ramp	506
PM TestWait Time	505
PMag Mode Cnfg	512
PMag Tune Cnfg	517
Port0 Regis Cnfg	236
Port0 Regis Ctrl	237
Port0 Regis Ltch	235
Port0 Regis Stat	238
Port1 Regis Cnfg	246
Port1 Regis Ctrl	247
Port1 Regis Ltch	245
Port1 Regis Stat	248
Posit Actl Load	765
Posit Detct1 In	784
Posit Detct2 In	785
Posit FB EGR Div	767
Posit FB EGR Mul	766
Posit Index Ctrl	796
Posit Index Step	797
Posit Load Fdbk	764
Posit Offset 1	753
Posit Offset 2	754
Posit Offset Spd	755
Posit Ref Sel	742
Posit Spd Output	318
Posit TP Select	777
PositDetct1 Stpt	780
PositDetct2 Stpt	781
PositIndexOutput	799
PositIndexPreset	798
Position Cmmd	747
Position Control	740
Position Error	769
Position Status	741
PositRef EGR Div	746
PositRef EGR Mul	745
PositRef EGR Out	744
PositReg Droop	771
PositReg Integ	770
PositReg P Gain	768
PositTP Data Int	778
PositTP DataReal	779
Power EE TP Data	413
Power EE TP Sel	412
Power Loss Level	408
Power Loss Mode	406
Power Loss Time	407
PreCharge Delay	472
PreChrg Control	411
PreChrg Err Cnfg	381
PreChrg TimeOut	410
Pt-Pt Accel Time	759
Pt-Pt Decel Time	760
Pt-Pt Filt BW	761
Pt-Pt Posit Ref	758
PWM Frequency	402
Ramped Spd Ref	42
Rated Amps	400
Rated Slip Freq	486
Rated Volts	401

Name	Number
Real In00	601
Real In01	603
Real In02	605
Real In03	607
Real In04	609
Real In05	611
Real In06	613
Real In07	615
Real In08	617
Real In09	619
Real In10	621
Real In11	623
Real In12	625
Real In13	627
Real In14	629
Real In15	631
Real Out00	633
Real Out01	635
Real Out02	637
Real Out03	639
Real Out04	641
Real Out05	643
Real Out06	645
Real Out07	647
Real Out08	649
Real Out09	651
Real Out10	653
Real Out11	655
Real Out12	657
Real Out13	659
Real Out14	661
Real Out15	663
Real to Int In	1035
Real to Int Out	1036
Regen Power Lim	128
Relay Out Bit	842
Relay Out Data	841
Reserved	1240
Reserved	1241
Reserved	1242
Reserved	1243
Reserved	1244
Reserved	1245
Reserved	1246
Reslvr0 CableBal	274
Reslvr0 Carrier	271
Reslvr0 Config	266
Reslvr0 In Volts	272
Reslvr0 SpdRatio	270
Reslvr0 Status	267
Reslvr0 TP Data	269
Reslvr0 TP Sel	268
Rev Speed Limit	30
Rotor Resistance	502
Rslvr0 XfrmRatio	273
Run Inhibit Stat	156
S Curve Spd Ref	43
S Curve Time	34
Scaled Spd Fdbk	72
Scaled Spd Ref	46
Selected Spd Ref	40
Service Factor	336

Name	Number
Servo Lock Gain	85
Set Speed Lim	171
Setpt 1 Data	172
Setpt 1 Limit	174
Setpt 2 Data	175
Setpt 2 Limit	177
Setpt1 TripPoint	173
Setpt2 TripPoint	176
SL BOF Err Accum	1232
SL BOF Err Limit	1235
SL BOF Error	1233
SL Buf Int Rx00	1073
SL Buf Int Rx01	1075
SL Buf Int Rx02	1077
SL Buf Int Rx03	1079
SL Buf Int Rx04	1081
SL Buf Int Rx05	1083
SL Buf Int Rx06	1085
SL Buf Int Rx07	1087
SL Buf Int Rx08	1089
SL Buf Int Rx09	1091
SL Buf Int Rx10	1093
SL Buf Int Rx11	1095
SL Buf Int Rx12	1097
SL Buf Int Rx13	1099
SL Buf Int Rx14	1101
SL Buf Int Rx15	1103
SL Buf Int Rx16	1105
SL Buf Int Rx17	1107
SL Buf Int Rx18	1109
SL Buf Int Rx19	1111
SL Buf Int Rx20	1113
SL Buf Int Rx21	1115
SL Buf Int Rx22	1117
SL Buf Int Rx23	1119
SL Buf Int Rx24	1121
SL Buf Int Rx25	1123
SL Buf Int Rx26	1125
SL Buf Int Rx27	1127
SL Buf Int Rx28	1129
SL Buf Int Rx29	1131
SL Buf Int Tx00	1161
SL Buf Int Tx01	1163
SL Buf Int Tx02	1165
SL Buf Int Tx03	1167
SL Buf Int Tx04	1169
SL Buf Int Tx05	1171
SL Buf Int Tx06	1173
SL Buf Int Tx07	1175
SL Buf Int Tx08	1177
SL Buf Int Tx09	1179
SL Buf Int Tx10	1181
SL Buf Int Tx11	1183
SL Buf Int Tx12	1185
SL Buf Int Tx13	1187
SL Buf Int Tx14	1189
SL Buf Int Tx15	1191
SL Buf Int Tx16	1193
SL Buf Int Tx17	1195
SL Buf Int Tx18	1197
SL Buf Int Tx19	1199
SL Buf Int Tx20	1201

Name	Number
SL Buf Int Tx21	1203
SL Buf Int Tx22	1205
SL Buf Int Tx23	1207
SL Buf Int Tx24	1209
SL Buf Int Tx25	1211
SL Buf Int Tx26	1213
SL Buf Int Tx27	1215
SL Buf Int Tx28	1217
SL Buf Int Tx29	1219
SL Buf Real Rx00	1074
SL Buf Real Rx01	1076
SL Buf Real Rx02	1078
SL Buf Real Rx03	1080
SL Buf Real Rx04	1082
SL Buf Real Rx05	1084
SL Buf Real Rx06	1086
SL Buf Real Rx07	1088
SL Buf Real Rx08	1090
SL Buf Real Rx09	1092
SL Buf Real Rx10	1094
SL Buf Real Rx11	1096
SL Buf Real Rx12	1098
SL Buf Real Rx13	1100
SL Buf Real Rx14	1102
SL Buf Real Rx15	1104
SL Buf Real Rx16	1106
SL Buf Real Rx17	1108
SL Buf Real Rx18	1110
SL Buf Real Rx19	1112
SL Buf Real Rx20	1114
SL Buf Real Rx21	1116
SL Buf Real Rx22	1118
SL Buf Real Rx23	1120
SL Buf Real Rx24	1122
SL Buf Real Rx25	1124
SL Buf Real Rx26	1126
SL Buf Real Rx27	1128
SL Buf Real Rx28	1130
SL Buf Real Rx29	1132
SL Buf Real Tx00	1162
SL Buf Real Tx01	1164
SL Buf Real Tx02	1166
SL Buf Real Tx03	1168
SL Buf Real Tx04	1170
SL Buf Real Tx05	1172
SL Buf Real Tx06	1174
SL Buf Real Tx07	1176
SL Buf Real Tx08	1178
SL Buf Real Tx09	1180
SL Buf Real Tx10	1182
SL Buf Real Tx11	1184
SL Buf Real Tx12	1186
SL Buf Real Tx13	1188
SL Buf Real Tx14	1190
SL Buf Real Tx15	1192
SL Buf Real Tx16	1194
SL Buf Real Tx17	1196
SL Buf Real Tx18	1198
SL Buf Real Tx19	1200
SL Buf Real Tx20	1202
SL Buf Real Tx21	1204
SL Buf Real Tx22	1206

Name	Number
SL Buf Real Tx23	1208
SL Buf Real Tx24	1210
SL Buf Real Tx25	1212
SL Buf Real Tx26	1214
SL Buf Real Tx27	1216
SL Buf Real Tx28	1218
SL Buf Real Tx29	1220
SL Clr Events	1049
SL Comm TP Data	1227
SL Comm TP Sel	1226
SL CommLoss Cnfg	384
SL CommLoss Data	383
SL CRC Err Accum	1230
SL CRC Err Limit	1234
SL CRC Error	1231
SL Dir Int Rx0	1054
SL Dir Int Rx1	1056
SL Dir Int Rx2	1058
SL Dir Int Rx3	1060
SL Dir Int Tx0	1141
SL Dir Int Tx1	1143
SL Dir Int Tx2	1145
SL Dir Int Tx3	1147
SL Dir Real Rx0	1055
SL Dir Real Rx1	1057
SL Dir Real Rx2	1059
SL Dir Real Rx3	1061
SL Dir Real Tx0	1142
SL Dir Real Tx1	1144
SL Dir Real Tx2	1146
SL Dir Real Tx3	1148
SL Error History	1228
SL Error Status	1229
SL Mult A In	1030
SL Mult B In	1031
SL Mult Base	1032
SL Mult Out	1033
SL Mult State	1034
SL MultErr Cnfg	390
SL Node Cnfg	1000
SL Rcv Events	1040
SL Rx Comm Frmt	1010
SL Rx DirectSel0	1011
SL Rx DirectSel1	1012
SL Rx DirectSel2	1013
SL Rx DirectSel3	1014
SL Rx Opt0 Regis	1047
SL Rx P0 Regis	1041
SL Rx P1 Regis	1042
SL System Rev	1002
SL System Time	317
SL Tx Comm Frmt	1020
SL Tx DirectSel0	1021
SL Tx DirectSel1	1022
SL Tx DirectSel2	1023
SL Tx DirectSel3	1024
Slip Gain Comp	476
Slip Gain Max	445
Slip Gain Min	446
Slip Ratio	533
Slip Reg I Gain	448
Slip Reg P Gain	447

Name	Number
Spd Err Filt BW	89
Spd Fdbk Scale	73
Spd Fdbk TP Data	79
Spd Fdbk TP RPM	78
Spd Fdbk TP Sel	77
Spd Gain TP Data	99
Spd Gain TP Sel	98
Spd Obs Trq Gain	227
Spd Observer BW	220
Spd Ref Bypass	37
Spd Ref TP Data	52
Spd Ref TP RPM	51
Spd Ref TP Sel	50
Spd Ref1 Divide	11
Spd Ref2 Multi	13
Spd Reg BW	90
Spd Reg Damping	91
Spd Reg Droop	86
Spd Reg I Gain	82
Spd Reg Neg Lim	103
Spd Reg P Gain	81
Spd Reg PI Out	302
Spd Reg Pos Lim	102
Spd Reg TP Data	109
Spd Reg TP Sel	108
Spd Trim1 SpdRef	47
Spd/Torq ModeSel	110
SpdRef Filt BW	36
SpdRef Filt Gain	35
SpdReg AntiBckup	84
SpdReg Integ Out	101
SpdReg P Gain Mx	92
SpdTrim 3 Scale	24
SpdTrim2 Filt BW	26
Speed Comp	55
Speed Error	100
Speed Ref 1	10
Speed Ref 2	12
Speed Ref 4	14
Speed Ref 5	15
Speed Ref DPI	20
Speed Ref Scale	38
Speed Ref Sel	16
Speed Reg Ctrl	80
Speed Trim 1	21
Speed Trim 2	22
Speed Trim 3	23
SReg FB Filt BW	94
SReg Out Filt BW	96
SReg Torq Preset	87
SRegFB Filt Gain	93
SRegOut FiltGain	95
Start Mask	694
Start Owner	701
Stator Frequency	534
StatorInduc Gain	469
StatorInductance	490
StatorResistance	491
Stop Dwell Time	154
Stop Oper TP Sel	163
Stop Owner	700
StopOper TP Data	164

Name	Number
STrim2 Filt Gain	25
SW Int 1 NC	1372
SW Int 1 NO	1371
SW Int 1 Output	1373
SW Real 1 NC	1375
SW Real 1 NO	1374
SW Real 1 Output	1376
Switch Control	1370
SynchLink Rev	1001
SynchLink Status	316
Test Current Ref	431
Test Freq Rate	433
Test Freq Ref	432
Test Mode Config	514
Test Status	165
Time Axis Output	201
Time Axis Rate	200
Torq NegLim Actl	124
Torq PosLim Actl	123
Torq Ref TP Data	131
Torq Ref TP Sel	130
Torq Ref1 Div	112
Torq Ref2 Mult	114
Torque En Dly	501
Torque Neg Limit	126
Torque Pos Limit	125
Torque Ref 1	111
Torque Ref 2	113
Torque Step	116
Torque Trim	115
Total Inertia	9
Trend Control	1250
Trend In1 Int	1264
Trend In1 Real	1265
Trend In2 Int	1266
Trend In2 Real	1267
Trend In3 Int	1268
Trend In3 Real	1269
Trend In4 Int	1270
Trend In4 Real	1271
Trend Mark Real	1281
Trend Marker Int	1280
Trend Out1 Int	1284
Trend Out1 Real	1285
Trend Out2 Int	1286
Trend Out2 Real	1287
Trend Out3 Int	1288
Trend Out3 Real	1289
Trend Out4 Int	1290
Trend Out4 Real	1291
Trend PreSamples	1260
Trend Rate	1253
Trend State	1252
Trend Status	1251
Trend Trig Bit	1259
Trend Trig Data	1258
Trend TrigA Int	1254
Trend TrigA Real	1255
Trend TrigB Int	1256
Trend TrigB Real	1257
TrendBuffPointer	1283
Tx Buf Data Type	1160

Name	Number
Tx Dir Data Type	1140
User Data Int 01	396
User Data Int 02	397
User Data Int 03	398
User Data Int 04	399
User Data Int 05	1300
User Data Int 06	1301
UserData Real 01	1315
UserData Real 02	1316
UserData Real 03	1317
UserData Real 04	1318
UserData Real 05	1319
UserData Real 06	1320
Vds Command	542
Vds Fdbk Filt	441
Vds Max	438
Vds Min	440
Virt Encdr Dlyed	63
Virt Encdr Posit	62
Virt Encoder EPR	61
Virtual Edge/Rev	226
Voltage Class	403
VoltFdbkLossCnfg	394
VPL Build Number	315
VPL Firmware Rev	314
Vqs Command	541
Vqs Fdbk Filt	442
Vqs Max	437
Vqs Min	439
X Offst SpdFilt	756
XReg Integ HiLim	773
XReg Integ LoLim	772
XReg Integ Out	774
XReg Spd HiLim	776
XReg Spd LoLim	775
Xsync Gen Period	787
Xsync In 1	788
Xsync In 2	790
Xsync In 3	793
Xsync Out 1	789
Xsync Out 2	791
Xsync Out 2 Dly	792
Xsync Out 3	794
Xsync Out 3 Dly	795
Xsync Status	786
Zero Speed Lim	160

Troubleshooting

Chapter Objectives

This chapter provides information to guide you in troubleshooting the PowerFlex 700S. A list and description of drive faults (with possible solutions, when applicable) and alarms is included.

For Information on...	See page...
Faults and Alarms	4-1
Drive Status	4-1
Manually Clearing Faults	4-4
Fault Descriptions	4-4

Faults and Alarms

A fault is a condition that stops the drive. There are two fault types.

Type	Fault Description	
①	Non-Resettable	This type of fault normally requires drive or motor repair. The cause of the fault must be corrected before the fault can be cleared. The fault will be reset on power up after repair
②	User Configurable	Programming and commissioning personnel can configure the drive's response to these exception events. Responses include: • Ignore • Alarm • Fault Coast Stop • Fault Ramp Stop • Fault Current Limit Stop

Drive Status

The condition or state of your drive is constantly monitored. Any changes will be indicated through the front panel LEDs and/or the HIM (if present).

LED Indications

Figure 4.1 Drive Status Indicators

Table 4.A Drive Status Indicators

			#	Name	Color	State	Description	Action
DRIVE	Power Structure		❶	PWR (Power)	Green	Steady	Illuminates when power is applied to the drive.	No action - no faults present
			❷ STS (Status)		Green	Flashing	Drive ready, but not running & no faults are present.	No action - no faults present
						Steady	Drive running, no faults are present.	No action - no faults present
					Yellow	Flashing	A type 2 (non-configurable) alarm condition exists, drive continues to run.	A run inhibit exists. Refer to Table 4.B
						Steady	A type 1 (user configurable) alarm condition exists, but drive continues to run.	
					Red	Flashing	A fault has occurred.	Refer to Table for faults.
						Steady	A non-resettable fault has occurred.	
					Red / Yellow	Flashing Alternately	The drive is in flash recovery mode. The only operation permitted is flash upgrade.	Complete Flash Upgrade
	Control Assembly	Communications	❸	PORT	Refer to the *Communication Adapter User Manual*		Status of DPI port internal communications (if present).	
				MOD			Status of communications module (when installed).	
				NET A			Status of network (if connected).	
				NET B			Status of secondary network (if connected).	
		Control	❹	SYNCHLINK	Green	Steady	• The module is configured as the time keeper or • The module is configured as a follower and synchronization is complete.	
					Green	Flashing	The follower(s) are not configured with the time keeper.	
					Red	Flashing	• The module is configured as a time master on SynchLink and has received time information from another time master on SynchLink.	
				ENABLE	Green	On	The drive's enable input is high.	

Precharge Board LED Indications

Precharge Board LED indicators are found on Frame 5 & 6 drives. The LEDs are located above the "Line Type" jumper shown in Figure 1.2.

Name	Color	State	Description
Power	Green	Steady	Indicates when precharge board power supply is operational
Alarm	Yellow	Flashing [1] [2] [3] [4] [5] [6] [7]	Number in "[ ]" indicates flashes and associated alarm(1): Low line voltage (<90%). Very low line voltage (<50%). Low phase (one phase <80% of line voltage). Frequency out of range or asymmetry (line sync failed). Low DC bus voltage (triggers ride-through operation). Input frequency momentarily out of range (40-65 Hz). DC bus short circuit detection active.
Fault	Red	Flashing [2] [4]	Number in "[ ]" indicates flashes and associated fault(2): DC bus short (Udc <2% after 20 ms). Line sync failed or low line (Uac <50% Unom).

(1) An alarm condition automatically resets when the condition no longer exists

(2) A fault indicates a malfunction that must be corrected and can only be reset after cycling power.

Table 4.B Common Causes of a Pre-Start Alarm

Examine Parameter 156 [Run Inhibit Status]			
Bit	**Description**		**Action**
1	No power is present at the Enable Terminal TB1- T7		Apply the enable
2, 3, 4	A stop command is being issued		Close all stop inputs
5	Power loss event is in progress, indicating a loss of the AC input voltage		Restore AC power
6	Data supplied by the power structure EEprom is invalid or corrupt		Cycle the power. If problem persists, replace the power structure.
7	Flash Update in Progress		Complete Flash Procedures
8	Drive is expecting a Start Edge and is receiving a continuous signal.		Open all start buttons and remove all start commands
9	Drive is expecting a Jog Edge and is receiving a continuous signal.		Open all jog buttons and remove all jog commands
10	A conflict exists between the Encoder PPR programming (Parameter 232 or 242) and the encoder configuration for edge counts (Parameter 233 or 243, bits 4 & 5).		Verify encoder data and reprogram
11	The drive cannot precharge because a precharge input is programmed and no signal is present.		Reprogram the input or close the precharge control contact.
12	Digital Configuration	Start input configured but stop not configured	Program Par 838-840 to include a stop button, rewire the drive
		Run input configured but control options do not match	Program Par 153, Bit 8 to "0" (2 wire control)
		Start input configured but control options do not match	Program Par 153, Bit 8 to "1" (3 wire control)
		Multiple inputs configured as Start or Run	Reprogram Par 838-840 so multiple starts, multiple runs or any combination do not exist
		Multiple inputs configured as Jog1	Reprogram Par 838-840 so only (1) is set to Jog1
		Multiple inputs configured as Jog2	Reprogram Par 838-840 so only (1) is set to Jog2
		Multiple inputs configured as Fwd/Rev	Reprogram Par 838-840 so only (1) is set to Fwd/Rev
14	Invalid Feedback Device for Permanent Magnet Motor Control		Set Par 222 to Value 5 (FB Opt Port0)

HIM Indication

The HIM also provides visual notification of a fault.

Condition	Display
Drive is indicating a fault. The LCD HIM immediately reports the fault condition by displaying the following: • "Faulted" appears in the status line • Fault number • Fault name • Time that has passed since the fault occurred Press Esc to regain control of the HIM	F-> Faulted Auto — Fault — F24 DC Bus Overvolt Time since Fault 00:23:52

Manually Clearing Faults

This section will contain a table that illustrates the HIM keystrokes necessary to clear faults.

Step	Key(s)
1. Press Esc to acknowledge the fault. The fault information will be removed so that you can use the HIM.	Esc
2. Address the condition that caused the fault. The cause must be corrected before the fault can be cleared.	
3. After corrective action has been taken, clear the fault by one of these methods. • Press Stop • Cycle drive power • Select "Clear Faults" from Diagnostic - Faults menu	

Fault Descriptions

Fault Descriptions and Configuration Parameters

No.	Name	Description	Action
1	Abs Ovespd Det	Motor speed has exceeded the limits set by parameter 30 [Rev Speed Limit] minus parameter 335 [Abs OverSpd Lim] or parameter 31 [Fwd Speed Limit] plus parameter 335 [Abs OverSpd Lim]	1. Verify the encoder feedback is correct polarity 2. Verify drive is not in torque mode, Par 110 [Spd/Torq ModeSel], value 2, Torque Ref -If in torque mode, verify load is present. 3. Verify min/max settings Par 30 [Rev Speed Lim] and Par 31 [Fwd Speed Lim]. 4. Verify the load is not overhauling. -If the load is overhauling, turn bus regulator off, Par 414 [Brake/Bus Cnfg], bit 2 [BusRef High].
2	Vref Decel Fail	The value of parameter 301 [Motor Spd Ref] has failed to decrease during a ramp to zero speed stop. This could possibly be due to a speed trim from parameters 21 [Speed Trim 1], 22 [Speed Trim 2] or 23 [Speed Trim 3].	
3	Encoder 0 Loss	One of the following has occurred on encoder 0: • missing encoder (broken wire) • quadrature error • phase loss	SynchLink report the event status to the VPL which acts according to the configuration of parameter 365 [Encdr0 Loss Cnfg]. Reconnect encoder or replace encoder.
4	Encoder 1 Loss	One of the following has occurred on encoder10: • missing encoder (broken wire) • quadrature error • phase loss	SynchLink report the event status to the VPL which acts according to the configuration of parameter 366 [Encdr1 Loss Cnfg].Reconnect encoder or replace encoder.

No.	Name	Description	Action
5	Opt Port 0 Loss	A fault on port 0 of the Hi-Resolution Encoder Feedback Option Card, MDI Option Card, or Resolver Feedback Option Card has occurred. Parameter 260 [Hi-Res0 Status] displays the fault status for port 0 of the Hi-Resolution Encoder Feedback Option Card. Parameter 267 [Resolver0 Status] displays the fault status for port 0 of the Resolver Feedback Option Card.	
6	Opt Port 1 Loss	The Linear sensor portion of the MDI feedback option card has detected a fault condition. Parameter 286 [Linear1 Status] displays the fault status for linear portion of the MDI feedback Option Card.	
9	Slink Comm Fail	A SynchLink communication fault has occurred. Parameter 1229 [SL Error Status] displays SynchLink errors.	
10	Drive Power Loss	DC Bus voltage has fallen below the minimum value • Parameter 306 [DC Bus Voltage] displays bus voltage • Parameter 330 [Fault TP Data] displays the minimum value when parameter 329 [Fault TP Sel] is set to five The drive must first complete precharge before this check is made	
11	Motor Oload Trip	A motor overload trip has occurred. Parameter 308 [Output Current] is squared, scaled and integrated over time. When this integrated value exceeds 1.0, this Exception Event occurs. The integrator's output can be viewed in Parameter 330 [Fault TP Data] when parameter 329 [Fault TP Sel] is set to 13 “Mtr OL Outpt”. The overload integration rate is affected by parameters 336 [Service Factor], 337 [Mtr I2T Curr Min], 338 [Mtr I2T Spd Min] and 339 [Mtr I2T Calibrat].	Reduce mechanical load
12	Motor Oload Pend	A motor overload is pending. Parameter 308 [Output Current] is squared, scaled and integrated over time. When this integrated value exceeds 0.5, this Exception Event occurs. The integrator's output can be viewed in Parameter 330 [Fault TP Data] when parameter 329 [Fault TP Sel] is set to 13 “Mtr OL Outpt”. The overload integration rate is affected by parameters 336 [Service Factor], 337 [Mtr I2T Curr Min], 338 [Mtr I2T Spd Min] and 339 [Mtr I2T Calibrat].	Reduce mechanical load
13	Motor Stalled	The motor has stalled. These three conditions have occurred at the same time for the amount of time specified in parameter 373 [Motor Stall Time]: • Drive is not stopped (parameter 150 [Logic State Mach] not equal to zero) • Drive is on limit (parameter 304 [Limit Status] not equal to zero) • Drive is at zero speed (parameter 155 [Logic Status], bit 13 [At Zero Spd] is set).	1. Increase torque limit 2. Reduce mechanical load
14	Inv Otemp Pend	Parameter 313 [Heatsink Temp] is within 10° C of maximum. View the maximum heat sink temperature in parameter 348 [Drive OL TP Data] when parameter 347 [Drive OL TP Se] is set to 30 [fMaxHsDegc].	
15	Inv Otemp Trip	Parameter 313 [Heatsink Temp] is above the maximum limit or temperature sensor has failed (shorted or open. See parameter 346 [Drive OL Status], bit 0 [NTC Shorted] and bit 1 [NTC Open].	

No.	Name	Description	Action
16	Inv OLoad Pend	The drive's operating point is approaching the intermittent current rating limitation. If output current remains at or above present levels, an Inverter Overload condition will occur. Operation of the Inverter Overload function is configured with the following parameters: • 336 [Service Factor] • 337 [Mtr I2T Curr Min] • 338 [Mtr I2T Spd Min] • 339 [Mtr I2T Calibrat]	Reduce the load on the drive
17	Inv OLoad Trip	The drive's operating point has exceeded the intermittent current rating and a foldback to the continuous rating in parameter 400 [Rated Amps] has occurred. Operation of the Inverter Overload function is configured with the following parameters: • 336 [Service Factor] • 337 [Mtr I2T Curr Min] • 338 [Mtr I2T Spd Min] • 339 [Mtr I2T Calibrat]	Reduce mechanical load
18	Ext Fault Input	A digital input has detected an external fault. Enter a value of 11 “Aux Fault” or 12 “AuxFault Inv” in one of the following parameters to configure an input to detect an external fault: • 838 [Digin 1 Sel] • 839 [Digin 2 Sel] • 840 [Digin 3 Sel]	
19	DSP Memory Error	Flash memory does not match the SRAM memory	
20	DSP Device Error	A DSP (VPL) interrupt task has not been completed in the allotted time.	
21	Err Inertia Test	Not Used	
22	Over Frequency Fault	Encoderless algorithm fails to converge on correct speed. Two possible causes: Velocity regulator is attempting to run below motor’s slip speed Frequency regulator “pulls out” and commanded motor frequency slows to maximum frequency limit.	
23	MC Commissn Fail	The drive has failed to complete either the Motor Autotuning procedure or the Power Circuits Diagnostics test. Parameters 552 [MC Diag Error 1], 553 [MC Diag Error 2], and 554 [MC Diag Error 3] display Motor Autotuning and Power Circuit Diagnostic faults.	
24	DC Bus Overvolt	Bus voltage has exceeded 815V dc in 400volt class drives or 405V dc for 200 volt class drives.	1. Verify the AC Line. 2. Verify that either Par 414 [Brake/Bus Cnfg], the brake or bus regulator is enabled. 3. Verify that Par 128 [Regen Power Lim] is set properly. 4. If Par 414, bit 0 [Brake Enable] is set, verify braking resistor is properly sized.
26	Ground Fault	A current to earth exceeds 35% of the peak drive rating	Check the motor and external wiring to the drive output terminals for a grounded condition.
27	Inst Overcurrent	Instantaneous motor current exceeds 214% of rating	
28	VPL/MC Comm Fail	A communication failure has occurred between the Velocity Position Loop (VLP processor and the Motor Control (MC) processor on the main control board. Possible causes are: • MC has failed to complete or pass diagnostic tests This is Indicated when Fault Test Point 16 equals 1. This test point is viewed in parameter 330 [Fault TP Data] when parameter 329 [Fault TP Sel] equals 16 “VPL Handshak”. • VPL has not detected MC handshake activity for over 32 ms. This is Indicated when Fault Test Point 16 equals 1. This test point is viewed in parameter 330 [Fault TP Data] when parameter 329 [Fault TP Sel] equals 15 “MC Handshake”. • MC has not detected VPL handshake activity for over 32 ms.	

No.	Name	Description	Action
29	PWM Signal short	This fault is detected when ever the actual IGBT gate are different than the commanded IGBT states. This fault is detected by the Motor Control processor.	
30	MC Firmware	One of the following Motor Control (MC) firmware errors has occurred: • MC Task Over Run • Illegal Interrupt • Self Diagnostic Fault • Data Error	
31	Precharge Error	The precharge function has failed to complete within 30 seconds of the precharge request. A precharge request is initiated when the DC Bus voltage is above the Undervoltage Trip level and the precharge input is high (the requirement for the precharge being high can be bypassed by setting parameter 838 [DigIn 1 Sel] to a value other than 14 “PreChrg/Disc”).	
32	PWM Asynch	The Motor Control Processor is not synchronized with SynchLink.	
33	+/- 12volt Power	The12V dc control voltage is outside the tolerance range. The positive voltage power must be within the band from +15.25 to +11.4V dc. The negative voltage power must be within the band from -16.6 to -10V dc.	Replace switch mode power supply. For smaller frames, replace drive.
35	Ctrl EE Checksum	The checksum read from the EEPROM does not match the checksum calculated	1. Cycle power 2. Replace MCB
38	Brake OL Trip	The calculated temperature of the dynamic braking resistor is too high. The temperature is calculated by a thermal model. • If the resistor is internal, the model uses resistor characteristic stored in the power structure EEPROM memory. • If the resistor is external, the model uses values of parameters 416 [Brake PulseWatts] and 417 [Brake Watts].	1. Verify actual temperature of brake -If hot, wait for brake to cool -If cold, cycle power to the drive 2. If cold, verify Par 416 [Brake PulseWatts] and Par 417 [Brake Watts] are correct.
39	PowerEE CRC fail	The Cycling Ring Checksum (CRC) of the data stored in the Power Board EEPROM does not match the stored CRC.	
40	Slink Mult Oflow	A SynchLink Multiplier Overflow has occurred. Parameter 1034 [SL Mult State] displays SynchLink multiplier overflow errors.	
41	Ridethru Timeout	The drive has been in a bus loss ridethrough condition for more than two seconds.	
42	DC Bus Undervolt	Bus voltage has fallen below the level configured by parameter 409 [Line Undervolts].	1. Verify the AC Line. 2. In frames 1-4, verify the precharge resistor is present. (With power off, there should be a resistance between DC+ and BR+). In frames 5 & 6, check the precharge board for errors. See the precharge board LED for fault sequence.
43	VoltageFdbk Loss	Loss of Motor or DC Bus Voltage Feedback has occurred because of a communication failure between Motor Control and Voltage Feedback board.	
44	Runtime Data Rst	Runtime data (hours, energy) has been reset to zero due to a checksum error.	
46	Interp Out Synch	Interpolator is out of synch on motion control mode.	
48	No Ctrl Device	The controlling device (HIM or controller) has been disconnected while the drive was running.	
49	DPI Loss Port 1	DPI Port 1 has stopped communicating. A SCAN port device is connected to a drive operating DPI devices at 500k Baud	Verify DPI device is present in port 1.
50	DPI Loss Port 2	DPI Port 2 has stopped communicating. A SCAN port device is connected to a drive operating DPI devices at 500k Baud	Verify DPI device is present in port 2.

No.	Name	Description	Action
51	DPI Loss Port 3	DPI Port 3 has stopped communicating. A SCAN port device is connected to a drive operating DPI devices at 500k Baud	Verify DPI device is present in port 3.
52	DPI Loss Port 4	DPI Port 4 has stopped communicating. A SCAN port device is connected to a drive operating DPI devices at 500k Baud	Verify DPI device is present in port 4.
53	DPI Loss Port 5	DPI Port 5 has stopped communicating. A SCAN port device is connected to a drive operating DPI devices at 500k Baud	Verify AC line power
54	DPI Loss Port 6	DPI Port 6 has stopped communicating. A SCAN port device is connected to a drive operating DPI devices at 500k Baud	
55	Net Loss DPI P1	A communications fault has occurred on the communication adapter at DPI port 1.	
56	Net Loss DPI P2	A communications fault has occurred on the communication adapter at DPI port 2.	
57	Net Loss DPI P3	A communications fault has occurred on the communication adapter at DPI port 3.	
58	Net Loss DPI P4	A communications fault has occurred on the communication adapter at DPI port 4.	
59	Net Loss DPI P5	A communications fault has occurred on the communication adapter at DPI port 5.	
60	Net Loss DPI P6	A communications fault has occurred on the communication adapter at DPI port 6.	
61	Logix Out of Run	The DriveLogix controller is in a Non-Run mode. Non-Run modes include program, remote-program and faulted modes.	Clear fault
62	Logix Timeout	The communication connection to the DriveLogix controller has timed out.	
63	Logix Closed	The DriveLogix controller has closed the Controller to Drive connection.	Verify drive is present in I/O
64	Logix Link Chng	A required link in the Controller to Drive Communication Format has been modified.	Clear fault
65	HiHp In PhaseLs	*(High Horse Power Only)* AC Input Phase Loss - AC voltage is not present on one or two input phases.	1. Check for voltage on each input phase. 2. Check the status of each external input fuse.
66	HiHp Bus Com Dly	*(High Horse Power Only)* Bus Communication Time Delay - the processor has not received proper periodic feedback information.	Check fiber-optic connections between the Power Interface Circuit Board and Voltage Feedback Circuit Board.
67	HiHp Bus Link Ls	*(High Horse Power Only)* Bus Communication Link Loss - bus communication between the Power Interface Circuit Board and Voltage Feedback Circuit Board has halted.	Check fiber-optic connections between the Power Interface Circuit Board and Voltage Feedback Circuit Board.
68	HiHp Bus CRC Er	*(High Horse Power Only)* Bus Communication CRC Error - too many Cycling Ring Checksum (CRC) errors have occurred in the communication bus. A fast power cycle may cause the 700S Main Control Board to attempt to communicate with the ASIC Board before the ASIC Board is energized.	Check fiber-optic connections between the Power Interface Circuit Board and Voltage Feedback Circuit Board. Wait five minutes before re-energizing the drive.
69	HiHp Bus WtchDog	*(High Horse Power Only)* Bus Communication Watchdog Error - communication has halted in the communication bus, causing the watch dog timer to expire.	1. Check fiber-optic connections between the Power Interface Circuit Board and Voltage Feedback Circuit Board. 2. Check connections between the Main Control Board and the Power Interface Circuit Board. 3. Replace the Voltage Feedback Circuit Board. 4. Replace the Power Interface Circuit Board. 5. Replace the Main Control Board.

No.	Name	Description	Action
70	HiHp Fan Fdbk Ls	*(High Horse Power Only)* Fan Feedback Loss - a fan feedback signal has been lost.	1. Check the main cooling fan. 2. Check the Main Control Board cooling fan.
71	HiHp Drv OvrLoad	*(High Horse Power Only)* Drive Overload - the circuit board on the Power Module has detected an overload.	Measure output current of the drive. If the level is ever greater than the maximum drive rated output current level reduce the load. If the levels are always well below the drive rated levels, then replace the power module.
72	HiHp PwrBd PrcEr	*(High Horse Power Only)* Power Board Processor Error - a microprocessor on the Power Board has detected a communication error.	1. Check fiber-optic connections between the Power Interface Circuit Board and Voltage Feedback Circuit Board. 2. Check connections between the Main Control Board and the Power Interface Circuit Board. 3. Replace the Voltage Feedback Circuit Board 4. Replace the Power Interface Circuit Board. 5. Replace the Main Control Board.
73	HiHp PrChrg Cntc	*(High Horse Power Only)* Precharge Contactor Fault - proper contactor feedback has not occurred. The precharge contactor has probably failed to pick up or the feedback signal has failed. This fault only applies to DC input drives.	• Check precharge circuit wiring. • Check for loose connections on X50 terminal block and/or the X9 and X15 connectors on the ASIC Board.
74	HiHp PwrEE Error	*(High Horse Power Only)* Power EEPROM Error - the rating of the drive and data in the Power EEPROM on the Power Board do not match.	Replace output power module or program a new power board.
75	HiHP PwrBd Otemp	*(High Horse Power Only)* Power Board Over-Temperature - temperature of the Power Board on has exceeded 85° C.	Check the main cooling fan and fan power supply, replace if necessary.
85	Position Error	Position feedback exceeds the position error tolerance setting, Par 913 [Motn PositErrTol].	

Notes:

Supplemental Information

Chapter Objectives

For Information on ...	See Page...
Specifications	A-1
DPI Communication Configurations	A-4
Output Devices	A-6
Drive, Fuse & Circuit Breaker Ratings	A-6
List of Motors with Compatible Thermistor Ratings	A-17
Spare Connectors	A-18
Dimensions	A-19

Specifications

Category	Specification											
		Frames 1-6 (690V Drive frames 5 & 6 only)						Frames 9 & up				
Protection		200-208V Drive	240V Drive	380/400V Drive	480V Drive	600V Drive	690V Drive	380/400V Drive	480V Drive	500V Drive	600V Drive	690V Drive
	AC Input Overvoltage Trip:	247VAC	285VAC	475VAC	570VAC	690VAC	863VAC	475VAC	570V AC	611V AC	690VAC	863VAC
	Bus Overvoltage Trip:	350VDC	405VDC	675VDC	810VDC	1013VDC	1164VDC	675VDC	810VDC	810VDC	1013VDC	1164VDC
	Bus Undervoltage Trip:	Adjustable						Adjustable				
	Nominal Bus Voltage:	281VDC	324VDC	540VDC	648VDC	810VDC	931VDC	540VDC	648VDC	645VDC	810VDC	931VDC
	Heat Sink Thermistor:	Monitored by microprocessor overtemp trip						Monitored by microprocessor overtemp trip				
	Drive Overcurrent Trip Software Current Limit: Hardware Current Limit: Instantaneous Current Limit:	Calculated value, 105% of motor rated to 200% of drive rated 105% of 3 sec. rating (158%-210%) 143% of 3 sec rating (215%-287%)						Calculated value, 105% of motor rated to 200% of drive rated 360% of rated Heavy Duty current (typical) —				
	Line Transients:	Up to 6000 volts peak per IEEE C62.41-1991						up to 6000 volts peak per IEEE C62.41-1991				
	Control Logic Noise Immunity:	Showering arc transients up to 1500V peak						Showering arc transients up to 1500V peak				
	Power Ride-Thru:	15 milliseconds at full load						15 milliseconds at full load				
	Logic Control Ride-Thru	0.25 sec., drive not running						0.25 seconds, drive not running				
	Ground Fault Trip:	Phase-to-ground on drive output						Phase-to-ground on drive output				
	Short Circuit Trip:	Phase-to-phase on drive output						Phase-to-phase on drive output				

Category	Specification		
		Frames 1-6 (690V Drive frames 5 & 6 only)	**Frames 9 & up**
Agency Certification		The drive is designed to meet applicable requirements of the following codes/standards: IEC 61800-2 Adjustable speed electrical power drive systems - General requirements IEC 61800-5-1 Adjustable speed electrical power drive systems - Safety requirements NFPA 70 – US National Electric Code NEMA 250 – Enclosures for Electrical Equipment	The drive is designed to meet applicable requirements of the following codes/standards: IEC 61800-2 Adjustable speed electrical power drive systems - General requirements IEC 61800-5-1 Adjustable speed electrical power drive systems - Safety requirements NFPA 70 - US National Electrical Code
	c UL US	UL and cUL Listed to UL508C and CAN/CSA - 22.2 No. 14-95	UL and cUL Listed to UL508C and CAN/CSA - 22.2 No. 14-95
	CE	Marked for all applicable European Directives EMC Directive (89/336/EEC) Emissions EN 61800-3 Adjustable Speed electrical power drive systems Part 3 Immunity EN 61800-3 Second Environment, Restricted Distribution Low Voltage Directive (73/23/EEC) EN 50178 Electronic Equipment for use in Power Installations	Marked for all applicable European Directives EMC Directive (89/336/EEC) Emissions EN 61800-3 Adjustable Speed electrical power drive systems Part 3 Low Voltage Directive (73/23/EEC) EN 50178 Electronic Equipment for use in Power Installations
	TÜV Rheinland Product Safety; EMC; TÜV; EN 50178; TÜV Rheinland; Bauart geprüft FS Type approved	TUV Rheinland (applies to frames 1 - 6, 200/400V, and frames 5 & 6, 690V only) TUV Functional Safety Report only for frames 1 - 4, 600V (no FS mark on the label)	TUV functional safety report only (no FS mark on the label)
Environment	Altitude:	1000 m (3300 ft.) max. without derating	1000 m (3300 ft) max. without derating
	Surrounding Air Temperature without Derating: Open Type: IP20: NEMA Type 1: IP56, NEMA Type 4X:	 0 to 50° C (32 to 122° F) 0 to 50° C (32 to 122° F) 0 to 40° C (32 to 104 ° F) 0 to 40 ° C (32 to 104 ° F) **Note**: Frames 9 & 10 are rated 0 to 40 ° C (32 to 104 ° F) surrounding air.	Based on drive rating, refer to Drive Frame chapters
	Storage Temperature (all const.):	-40 to 70° C (-40 to 158° F)	–40 to 70 degrees C (–40 to 158 degrees F)
	Relative Humidity:	5 to 95% non-condensing	5 to 95% non-condensing
	Shock:	10G peak for 11 ms duration (+/- 1.0 ms)	15G peak for 11ms duration (±1.0 ms)
	Vibration:	0.152 mm (0.006 in.) displacement, 1G peak, 5.5 Hz	2 mm (0.0787 in.) displacement, 1G peak EN50178 / EN60068-2-6
	Atmosphere	—	**Important:** Drive **must** **not** be installed in an area where the ambient atmosphere contains volatile or corrosive gas, vapors or dust. If the drive is not going to be installed for a period of time, it must be stored in an area where it will not be exposed to a corrosive atmosphere.
Electrical	AC Input Voltage Tolerance:	 See Input Voltage Range/Tolerance on page C-1 for Full Power and Operating Range	—
	Frequency Tolerance:	47-63 Hz	47-63 Hz.
	Input Phases:	Three-phase input provides full rating for all drives. Single-phase operation provides 50% of rated current.	Three-phase input provides full rating for all drives. Single-phase operation provides 50% of rated current.
	DC Input Voltage Tolerance	 +/- 10% of Nominal Bus Voltage (above)	—
	Displacement Power Factor:	0.98 across speed range	0.98 across speed range
	Efficiency:	97.5% at rated amps, nominal line volts.	97.5% at rated amps, nominal line volts.
	Max. Short Circuit Current Rating: Using Recommended Fuse or Circuit Breaker Type	Maximum short circuit current rating to match specified fuse/ circuit breaker capability. ≤ 200,000 Amps	≤ 200,000 Amps
	Maximum Drive to Motor Power Ratio	The drive to motor rating cannot exceed a 2:1 ratio	The drive to motor rating cannot exceed a 2:1 ratio

Category	Specification		
		Frames 1-6 (690V Drive frames 5 & 6 only)	**Frames 9 & up**
Control	Method Induction Motor: Brushless Motor:	Sine coded PWM with programmable carrier frequency, Indirect Self-Organized, Field-Oriented Control, Current-regulated. Ratings apply to all drives. Refer to the PowerFlex® 700S - Phase I Control Reference Manual, publication PFLEX-RM002, for derating guidelines. The drive can be supplied as 6 pulse or 12 pulse in a configured package.	Sine coded PWM with programmable carrier frequency, Indirect Self-Organized, Field-Oriented Control, Current-regulated. Ratings apply to all drives. Refer to the PowerFlex® 700S - Phase I Control Reference Manual, publication PFLEX-RM002, for derating guidelines. The drive can be supplied as 6 pulse or 12 pulse in a configured package.
	Carrier Frequency	Drive rating: 4 kHz Settings: 2, 4, 8, 10 kHz	Drive rating: 2 kHz Settings: 2, 4, 8, 10 kHz
	Output Voltage Range:	0 to rated motor voltage	0 to rated motor voltage
	Output Frequency Range:	0 – 320 Hz	0 – 320 Hz
	Speed Control	Speed regulation - without feedback 0.1% of base speed across 120:1 speed range 120:1 operating range 50 rad/sec bandwidth	Speed regulation - without feedback 0.1% of base speed across 120:1 speed range 120:1 operating range 50 rad/sec bandwidth
		Speed regulation - with feedback 0.001% of base speed across 120:1 speed range 1000:1 operating range 300 rad/sec bandwidth	Speed regulation - with feedback 0.001% of base speed across 120:1 speed range 1000:1 operating range 300 rad/sec bandwidth
	Torque Regulation	Torque Regulation - without feedback +/-10%, 600 rad/sec bandwidth	Torque Regulation - without feedback +/-10%, 600 rad/sec bandwidth
		Torque Regulation - with feedback +/-2%, 2500 rad/sec bandwidth	Torque Regulation - with feedback +/-5%, 2500 rad/sec bandwidth
	Selectable Motor Control:	Field Oriented Control with and without a feedback device and permanent magnet motor control	Field Oriented Control with and without a feedback device and permanent magnet motor control
	Stop Modes:	Multiple programmable stop modes including – Ramp, Coast and Current Limit	Multiple programmable stop modes including – Ramp, Coast and Current Limit
	Accel/Decel	Independently programmable accel and decel times adjustable from 0 to 6553.5 in 0.1 second increments.	Independently programmable accel and decel times adjustable from 0 to 6553.5 in 0.1 second increments.
	S-Curve Time	Adjustable from 0.5 to 4.0 seconds	Adjustable from 0.5 to 4.0 seconds
	Intermittent Overload:	110% Overload capability for up to 1 minute 150% Overload capability for up to 3 seconds	110% Overload capability for up to 1 minute 150% Overload capability for up to 3 seconds
	Current Limit Capability:	Independent Motoring and Regenerative Power Limits programmable to 800% of rated output current	Independent Motoring and Regenerative Power Limits programmable to 800% of rated output current
	Electronic Motor Overload Protection	Provides class 10 motor overload protection according to NEC article 430 and motor over-temperature protection according to NEC article 430.126 (A) (2). UL 508C File E59272.	Provides class 10 motor overload protection according to NEC article 430 and motor over-temperature protection according to NEC article 430.126 (A) (2). UL 508C File E59272.

Category	Specification		
		Frames 1-6 (690V Drive frames 5 & 6 only)	**Frames 9 & up**
Feedback	Encoder Inputs (2):	Dual Channel Plus Marker, Isolated with differential transmitter Output (Line Drive) Incremental, Dual Channel Quadrature type	Dual Channel Plus Marker, Isolated with differential transmitter Output (Line Drive) Incremental, Dual Channel Quadrature type
	Encoder Voltage Supply:	5V DC or 12 V DC 320 mA/channel 5V DC requires an external power supply. 12 V DC minimum high state voltage of 7V DC, maximum low state voltage of 0.4V DC	5V DC or 12 V DC 320 mA/channel 5V DC requires an external power supply. 12 V DC minimum high state voltage of 7V DC, maximum low state voltage of 0.4V DC
	Maximum Input Frequency:	400 kHz	500 kHz
	Stegmann Option:		
	Encoder Voltage Supply:	11.5V DC @ 130 mA	11.5V DC @ 130 mA
	Hi-Resolution Feedback:	Sine/Cosine 1V P-P Offset 2.5	Sine/Cosine 1V P-P Offset 2.5
	Maximum Cable Length:	182 m (600 ft.)	182 m (600 ft.)
	RS-485 Interface:	Hi-Resolution Feedback Option card obtains the following information via the Hiperface RS-485 interface shortly after power-up: Address, Command Number, Mode, Number of turns, Number of Sine/Cos cycles, Checksum	Hi-Resolution Feedback Option card obtains the following information via the Hiperface RS-485 interface shortly after power-up: Address, Command Number, Mode, Number of turns, Number of Sine/Cos cycles, Checksum
	Customer-I/O Plug (P1) - Hi Res:	Allen-Bradley PN: S94262912 Weidmuller PN: BL3.50/90/12BK	Allen-Bradley PN: S94262912 Weidmuller PN: BL3.50/90/12BK
	Resolver Option:		
	Excitation Frequency:	2400 Hz	2400 Hz
	Excitation Voltage:	4.25-26 Vrms	4.25-26 Vrms
	Operating Frequency Range:	1 - 10 kHz	1 - 10 kHz
	Resolver Feedback Voltage:	2V ± 300 mV	2V ± 300 mV
	Maximum Cable Length:	304.8 meters (1000 ft.)	304.8 meters (1000 ft.)
DriveLogix	User Available MemoryBase: With Memory Expansion Board:	256 kbytes 768 kbytes	256 kbytes 768 kbytes
	Battery:	1756-BA1 (Allen-Bradley PN 94194801) 0.59g lithium	1756-BA1 (Allen-Bradley PN 94194801) 0.59g lithium
	Serial Cable:	1761-CBLPM02 to 1761-NET-AIC	1761-CBLPM02 to 1761-NET-AIC
		1761-CBLPA00 to 1761-NET-AIC	1761-CBLPA00 to 1761-NET-AIC
		1756-CP3 directly to controller	1756-CP3 directly to controller
		1747-CP3 directly to controller	1747-CP3 directly to controller
		category 3 (2)	category 3 (2)
	Flex I/O Connection:	Up to (8) modules	Up to (8) modules
	FLEXBUS Current Output:	640 mA maximum @ 5.1V dc	640 mA maximum @ 5.1V dc
	Cable:	4100-CCF3	4100-CCF3

DPI Communication Configurations

Typical Programmable Controller Configurations

Important: If programs are written that continuously write information to the drive, care must be taken to properly format the block transfer. If attribute 10 is selected for the block transfer, values will be written only to RAM and will not be saved by the drive. This is the preferred attribute for continuous transfers. If attribute 9 is selected, each program scan will complete a write to the drives non-volatile memory (EEprom). Since the EEprom has a fixed number of allowed writes, continuous block transfers will quickly damage the EEprom. Do Not assign attribute 9 to continuous block transfers. Refer to the individual communications adapter User Manual for additional details.

Logic Command Word

Logic Bits																	
15	14	13	12	11	10	9	8	7	6	5	4	3	2	1	0	Command	Description
															x	Normal Stop	0 = Not Normal Stop 1 = Normal Stop
														x		Start(1)	0 = Not Start 1 = Start
													x			Jog 1	0 = Not Jog using [Jog Speed 1] 1 = Jog using [Jog Speed 1]
												x				Clear Fault(2)	0 = Not Clear Fault 1 = Clear Fault
										x	x					Unipolar Direction	00 = No Command 01 = Forward Command 10 = Reverse Command 11 = Hold Direction Control
									x							Reserved	
								x								Jog 2	0 = Not Jog using [Jog Speed 2] 1 = Jog using [Jog Speed 2]
							x									Current Limit Stop	0 = Not Current Limit Stop 1 = Current Limit Stop
						x										Coast Stop	0 = Not Coast to Stop 1 = Coast to Stop
					x											Reserved	
				x												Reserved	
			x													Reserved	
		x														Reserved	
	x															Reserved	
x																Reserved	

(1) A Not Stop condition (logic bit 0 = 0, logic bit 8 = 0, and logic bit 9 = 0) must first be present before a 1 = Start condition will start the drive.
(2) To perform this command, the value must switch from “0” to “1.”

Logic Status Word

Logic Bits																	
15	14	13	12	11	10	9	8	7	6	5	4	3	2	1	0	Status	Description
															x	Enabled	0 = Not Enabled 1 = Enabled
														x		Running	0 = Not Running 1 = Running
													x			Command Direction	0 = Reverse 1 = Forward
												x				Actual Direction	0 = Reverse 1 = Forward
											x					Accel	0 = Not Accelerating 1 = Accelerating
										x						Decel	0 = Not Decelerating 1 = Decelerating
									x							Jogging	0 = Not Jogging 1 = Jogging
								x								Fault	0 = No Fault 1 = Fault
							x									Alarm	0 = No Alarm 1 = Alarm
						x										Flash Mode	0 = Not in Flash Mode 1 = In Flash Mode
					x											Run Ready	0 = Not Ready to Run 1 = Ready to Run
				x												At Limit(1)	0 = Not At Limit 1 = At Limit
			x													Tach Loss Sw	0 = Not Tach Loss Sw 1 = Tach Loss Sw
		x														At Zero Spd	0 = Not At Zero Speed 1 = At Zero Speed
	x															At Setpt Spd	0 = Not At Setpoint Speed 1= At Setpoint Speed
x																Reserved	

(1) See Parameter 304 - [Limit Status] in the PowerFlex 700S drive for a description of the limit status conditions.

Output Devices

Common mode cores are internal to the drive. For information on output devices such as output contactors, cable terminators and output reactors refer to the *PowerFlex Reference Manual, Vol. 2*.

Fusing and Circuit Breakers

The tables on the following pages provide recommended AC line input fuse and circuit breaker information. See Fusing and Circuit Breakers below for UL and IEC requirements. Sizes listed are the recommended sizes based on 40 °C (104 °F) and the U.S. NEC. Other country, state, or local codes can require different ratings. Tables with DC link fuse recommendations for DC input drives are also provided.

Fusing

The recommend fuse types are listed below. If available current ratings do not match those listed in the tables provided, choose the next higher fuse rating.

- IEC - BS88 (British Standard) Parts 1 & 2, EN60269-1, Parts 1 & 2, type gG or equivalent should be used.
- UL - UL requirements specify that UL Class CC, T, RK1, or J fuses must be used for all drives in this section.

Circuit Breakers

The “non-fuse” listings in the following tables include inverse time circuit breakers, instantaneous trip circuit breakers (motor circuit protectors) and 140M self-protected combination motor controllers. If one of these is chosen as the desired protection method, the following requirements apply:

- IEC - Both types of circuit breakers and 140M self-protected combination motor controllers are acceptable for IEC installations.
- UL - Only inverse time circuit breakers and the specified 140M self-protected combination motor controllers are acceptable for UL installations.

(1) Typical designations include, but may not be limited to the following; Parts 1 & 2: AC, AD, BC, BD, CD, DD, ED, EFS, EF, FF, FG, GF, GG, GH.

AC Input Protection Devices

The following tables provide informaiton on the recommended fuses and circuit breakers for PowerFlex 700S Phase I AC drives.

208 Volt AC Input Frames 1…6 Drive Protection Devices

Drive Catalog Number	Frame	kW Rating		Input Ratings		Dual Element Time Delay Fuse		Non-Time Delay Fuse		Circuit Breaker[3]	Motor Circuit Protector[5]	140M Motor Starter with Adjustable Current Range[6][7]			
		ND	HD	Amps	kVA	Min.[1]	Max.[2]	Min.[1]	Max.[2]	Max.[4]	Max.[5]	Available Catalog Numbers[8]			Minimum Enclosure Volume (in.^{3})[9]
20DB4P2	1	0.75	0.55	3.7	1.3	6	10	6	17.5	15	7	M-C2E-B63	M-D8E-B63	–	7269
20DB6P8	1	1.5	1.1	6.8	2.4	10	15	10	30	30	15	M-C2E-C10	M-D8E-C10	M-F8E-C10	7269
20DB9P6	1	2.2	1.5	9.5	3.4	12	20	12	40	40	15	M-C2E-C16	M-D8E-C16	M-F8E-C16	7269
20DB015	1	4.0	3.0	15.7	5.7	20	35	20	70	70	30	M-C2E-C20	M-D8E-C20	M-F8E-C20	7269
20DB022	1	5.5	4.0	23.0	8.3	30	50	30	100	100	30	–	M-D8E-C25	M-F8E-C25	7269
20DB028	2	7.5	5.5	29.6	10.7	40	70	40	125	125	50	–	–	M-F8E-C32	7269
20DB042	3	11	7.5	44.5	16.0	60	100	60	175	175	70	–	–	M-F8E-C45	13630
20DB052	3	15	11	51.5	18.6	80	125	80	200	200	100	–	–	–	–
20DB070	4	18.5	15	72	25.9	90	175	90	300	300	100	–	–	–	–
20DB080	4	22	18.5	84.7	30.5	110	200	110	350	350	150	–	–	–	–
20DB104	5	30	–	113	40.7	150	250	150	475	350	150	–	–	–	–
		–	22	84.7	30.5	125	200	125	350	300	150	–	–	–	–
20DB130	5	37	–	141	44.1	175	275	175	500	375	250	–	–	–	–
		–	30	113	35.3	125	225	125	400	300	150	–	–	–	–
20DB154	6	45	–	167	60.1	225	350	225	500	500	250	–	–	–	–
		–	37	141	50.9	200	300	200	500	450	250	–	–	–	–
20DB192	6	55	–	208	75.0	300	450	300	600	600	400	–	–	–	–
		–	45	167	60.1	225	350	225	500	500	250	–	–	–	–
20DB260	6	66	–	255	96.7	300	575	300	750	750	400	–	–	–	–
		–	55	199	71.7	225	450	225	600	600	400	–	–	–	–

(1) Minimum protection device size is the lowest rated device that supplies maximum protection without nuisance tripping.
(2) Maximum protection device size is the highest rated device that supplies drive protection. For US NEC, minimum size is 125% of motor FLA. Ratings shown are maximum.
(3) Circuit Breaker - inverse time breaker. For US NEC, minimum size is 125% of motor FLA. Ratings shown are maximum.
(4) Maximum allowable rating by US NEC. Exact size must be chosen for each installation.
(5) Motor Circuit Protector - instantaneous trip circuit breaker. For US NEC minimum size is 125% of motor/drive FLA. Ratings shown are suggested. Instantaneous trip settings must be set to US NEC code. Not to exceed 1300% FLA.
(6) Bulletin 140M with adjustable current range should have the current trip set to the minimum range that the device will not trip.
(7) Manual Self-Protected (Type E) Combination Motor Controller, UL listed for 208 Wye or Delta, 240 Wye or Delta, 480Y/277 or 600Y/ 347. Not UL listed for use on 480V or 600V Delta/Delta, corner ground, or high-resistance ground systems.
(8) The AIC ratings of the Bulletin 140M Motor Protector Circuit Breakers may vary. See Bulletin 140M Motor Protection Circuit Breakers Application Ratings.
(9) When using a Manual Self-Protected (Type E) Combination Motor Controller, the drive must be installed in a ventilated or non-ventilated enclosure with the minimum volume specified in this column. Application specific thermal considerations may require a larger enclosure.

240 Volt AC Input Frames 1…6 Drive Protection Devices

Drive Catalog Number	Frame	HP Rating		Input Ratings		Dual Element Time Delay Fuse		Non-Time Delay Fuse		Circuit Breaker[3]	Motor Circuit Protector[5]	140M Motor Starter with Adjustable Current Range[6][7]			
		ND	HD	Amps	kVA	Min.[1]	Max.[2]	Min.[2]	Max.[3]	Max.[4]	Max.[5]	Available Catalog Numbers[8]			Minimum Enclosure Volume (in.^{3})[9]
20DB4P2	1	1	0.75	3.3	1.4	5	8	5	15	15	7	M-C2E-B63	M-D8E-B63	–	7269
20DB6P8	1	2	1.5	5.9	2.4	10	15	10	25	25	15	M-C2E-C10	M-D8E-C10	M-F8E-C10	7269
20DB9P6	1	3	2	8.3	3.4	12	20	12	35	35	15	M-C2E-C10	M-D8E-C10	M-F8E-C10	7269
20DB015	1	5	3	13.7	5.7	20	30	20	60	60	30	M-C2E-C16	M-D8E-C16	M-F8E-C16	7269
20DB022	1	7.5	5	19.9	8.3	25	50	25	80	80	30	–	M-D8E-C25	M-F8E-C25	7269
20DB028	2	10	7.5	25.7	10.7	35	60	35	100	100	50	–	–	M-F8E-C32	7269
20DB042	3	15	10	38.5	16.0	50	90	50	150	150	50	–	–	M-F8E-C45	13630
20DB052	3	20	15	47.7	19.8	60	100	60	200	200	100	–	–	–	–
20DB070	4	25	20	64.2	26.7	90	150	90	275	275	100	–	–	–	–
20DB080	4	30	25	73.2	30.5	100	180	100	300	300	100	–	–	–	–
20DB104	5	40	–	98	40.6	125	225	125	400	300	150	–	–	–	–
		–	30	73	30.5	100	175	100	300	300	100	–	–	–	–
20DB130	5	50	–	122	50.7	175	275	175	500	375	250	–	–	–	–
		–	40	98	40.6	125	225	125	400	300	150	–	–	–	–
20DB154	6	60	–	145	60.1	200	300	200	600	450	250	–	–	–	–
		–	50	122	50.7	175	275	175	500	375	250	–	–	–	–
20DB192	6	75	–	180	74.9	225	400	225	600	575	250	–	–	–	–
		–	60	145	60.1	200	300	200	600	450	250	–	–	–	–
20DB260	6	100	–	233	96.8	300	575	300	750	750	400	–	–	–	–
		–	75	169	74.9	225	450	225	600	600	400	–	–	–	–

(1) Minimum protection device size is the lowest rated device that supplies maximum protection without nuisance tripping.
(2) Maximum protection device size is the highest rated device that supplies drive protection. For US NEC, minimum size is 125% of motor FLA. Ratings shown are maximum.
(3) Circuit Breaker - inverse time breaker. For US NEC, minimum size is 125% of motor FLA. Ratings shown are maximum.
(4) Maximum allowable rating by US NEC. Exact size must be chosen for each installation.
(5) Motor Circuit Protector - instantaneous trip circuit breaker. For US NEC minimum size is 125% of motor/drive FLA. Ratings shown are suggested. Instantaneous trip settings must be set to US NEC code. Not to exceed 1300% FLA.
(6) Bulletin 140M with adjustable current range should have the current trip set to the minimum range that the device will not trip.
(7) Manual Self-Protected (Type E) Combination Motor Controller, UL listed for 208 Wye or Delta, 240 Wye or Delta, 480Y/277 or 600Y/ 347. Not UL listed for use on 480V or 600V Delta/Delta, corner ground, or high-resistance ground systems.
(8) The AIC ratings of the Bulletin 140M Motor Protector Circuit Breakers may vary. See Bulletin 140M Motor Protection Circuit Breakers Application Ratings.
(9) When using a Manual Self-Protected (Type E) Combination Motor Controller, the drive must be installed in a ventilated or non-ventilated enclosure with the minimum volume specified in this column. Application specific thermal considerations may require a larger enclosure.

400 Volt AC Input Frames 1…6 Drive Protection Devices

Drive Catalog Number	Frame	kW Rating		Input Ratings		Dual Element Time Delay Fuse		Non-Time Delay Fuse		Circuit Breaker[5]	Motor Circuit Protector[7]	140M Motor Starter with Adjustable Current Range[8][9]			
		ND	HD	Amps	kVA	Min.[3]	Max.[4]	Min.[5]	Max.[6]	Max.[6]	Max.[8]	Available Catalog Numbers[10]			Minimum Enclosure Volume (in.^{3})[11]
20DC2P1	1	0.75	0.55	1.8	1.3	3	6	3	8	15	3	M-C2E-B25	M-D8E-B25	–	7269
20DC3P5	1	1.5	1.1	3.2	2.2	6	7	6	12	15	7	M-C2E-B40	M-D8E-B40	–	7269
20DC5P0	1	2.2	1.5	4.6	3.2	6	10	6	20	20	7	M-C2E-B63	M-D8E-B63	–	7269
20DC8P7	1	4	3.0	7.9	5.5	15	17.5	15	30	30	15	M-C2E-C10	M-D8E-C10	M-F8E-C10	7269
20DC011	1	5.5	4	10.8	7.5	15	25	15	45	45	15	M-C2E-C16	M-D8E-C16	M-F8E-C16	7269
20DC015	1	7.5	5.5	14.4	10.0	20	30	20	60	60	20	M-C2E-C20	M-D8E-C20	M-F8E-C20	7269
20DC022	1	11	7.5	20.6	14.3	30	45	30	80	80	30	–	M-D8E-C25	M-F8E-C25	7269
20DC030	2	15	11	28.4	19.7	35	60	35	120	120	50	–	–	M-F8E-C32	7269
20DC037	2	18.5	15	35.0	24.3	45	80	45	125	125	50	–	–	M-F8E-C45	7269
20DC043	3	22	18.5	40.7	28.2	60	90	60	150	150	60	–	–	–	–
20DC056	3	30	22	53	36.7	70	125	70	200	200	100	–	–	–	–
20DC072	3	37	30	68.9	47.8	90	150	90	250	250	100	–	–	–	–

Drive Catalog Number	Frame	kW Rating		Input Ratings		Dual Element Time Delay Fuse		Non-Time Delay Fuse		Circuit Breaker (5)	Motor Circuit Protector (7)	140M Motor Starter with Adjustable Current Range (8)(9)			
		ND	HD	Amps	kVA	Min. (3)	Max. (4)	Min. (5)	Max. (6)	Max. (6)	Max. (8)	Available Catalog Numbers (10)			Minimum Enclosure Volume (in.^{3})(11)
20DC085 (1)	4	45	–	81.4	56.4	110	200	110	300	300	150	–	–	–	–
		–	37	68.9	47.8	90	175	90	275	300	100	–	–	–	–
20DC105	5	55	–	100.5	69.6	125	225	125	400	300	150	–	–	–	–
		–	45	81.4	56.4	110	175	110	300	300	150	–	–	–	–
20DC125	5	55	–	121.1	83.9	150	275	150	500	375	250	–	–	–	–
		–	45	101	63.7	125	200	125	375	375	150	–	–	–	–
20DC140	5	75	–	135.6	94	200	300	200	400	400	250	–	–	–	–
		–	55	121	69.6	150	225	150	300	300	150	–	–	–	–
20DC170	6	90	–	164.6	114	250	375	250	600	500	250	–	–	–	–
		–	75	136	94	200	300	200	550	400	250	–	–	–	–
20DC205 (2)	6	110	–	198.5	138	250	450	250	600	600	400	–	–	–	–
		–	90	164	114	250	375	250	600	500	250	–	–	–	–
20DC260	6	132	–	254.7	166	350	550	350	750	750	400	–	–	–	–
		–	110	199	138	250	450	250	600	600	400	–	–	–	–

(1) 20DC085 current rating is limited to 45 degrees C ambient.
(2) 20DC205 current rating is limited to 40 degrees C ambient.
(3) Minimum protection device size is the lowest rated device that supplies maximum protection without nuisance tripping.
(4) Maximum protection device size is the highest rated device that supplies drive protection. For US NEC, minimum size is 125% of motor FLA. Ratings shown are maximum.
(5) Circuit Breaker - inverse time breaker. For US NEC, minimum size is 125% of motor FLA. Ratings shown are maximum.
(6) Maximum allowable rating by US NEC. Exact size must be chosen for each installation.
(7) Motor Circuit Protector - instantaneous trip circuit breaker. For US NEC minimum size is 125% of motor/drive FLA. Ratings shown are suggested. Instantaneous trip settings must be set to US NEC code. Not to exceed 1300% FLA.
(8) Bulletin 140M with adjustable current range should have the current trip set to the minimum range that the device will not trip.
(9) Manual Self-Protected (Type E) Combination Motor Controller, UL listed for 208 Wye or Delta, 240 Wye or Delta, 480Y/277 or 600Y/ 347. Not UL listed for use on 480V or 600V Delta/Delta, corner ground, or high-resistance ground systems.
(10) The AIC ratings of the Bulletin 140M Motor Protector Circuit Breakers may vary. See Bulletin 140M Motor Protection Circuit Breakers Application Ratings.
(11) When using a Manual Self-Protected (Type E) Combination Motor Controller, the drive must be installed in a ventilated or non-ventilated enclosure with the minimum volume specified in this column. Application specific thermal considerations may require a larger enclosure.

400 Volt AC Input Frames 9…11 Drive Protection Devices

Drive Catalog Number	Frame	kW Rating		Input Ratings	Dual Element Time Delay Fuse		Non-Time Delay Fuse		Bussmann Style Semi-Conductor Fuse	Circuit Breaker (3)	Motor Circuit Protector (5)
		ND	HD	Amps	Min. (1)	Max. (2)	Min. (1)	Max. (3)		Max. (4)	Max. (5)
20DC261	9	132	-	263	350	550	350	700	170M5813	700	400
		-	110	207	275	450	275	600	170M5813	600	300
20DC300	9	160	-	302	400	650	400	900	170M5813	900	400
		-	132	247	350	500	350	700	170M5813	700	400
20DC385	10	200	-	388	500	850	500	1100	170M5813	1100	600
		-	160	302	400	650	400	900	170M5813	900	400
20DC460	10	250	-	463	600	1000	600	1300	170M8547	1300	600
		-	200	388	500	850	500	1100	170M8547	1100	600
20DC500	10	250	-	504	650	1100	650	1500	170M8547	1500	700
		-	250	423	550	900	550	1200	170M8547	1200	600
20DC590	11	315	-	594	750 (1 per phs) 375 (2 per phs)	1300	750 (1 per phs) 375 (2 per phs)	1700	170M5813	1700	800
		-	250	524	700 (1 per phs) 350 (2 per phs)	1100	700 (1 per phs) 350 (2 per phs)	1500	170M5813	1500	700

Drive Catalog Number	Frame	kW Rating		Input Ratings	Dual Element Time Delay Fuse		Non-Time Delay Fuse		Bussmann Style Semi-Conductor Fuse	Circuit Breaker (3)	Motor Circuit Protector (5)
		ND	HD	Amps	Min. (1)	Max. (2)	Min. (1)	Max. (3)		Max. (4)	Max. (5)
20DC650	11	355	-	655	850 (1 per phs) 425 (2 per phs)	1400	850 (1 per phs) 425 (2 per phs)	1900	170M5813	1900	1000
		-	315	594	750 (1 per phs) 375 (2 per phs)	1300	750 (1 per phs) 375 (2 per phs)	1700	170M5813	1700	800
20DC730	11	400	-	735	1000 (1 per phs) 500 (2 per phs)	1600	1000 (1 per phs) 500 (2 per phs)	2100	170M5813	2100	1200
		-	355	655	850 (1 per phs) 425 (2 per phs)	1400	850 (1 per phs) 425 (2 per phs)	1900	170M5813	1900	1000

(1) Minimum protection device size is the lowest rated device that supplies maximum protection without nuisance tripping.
(2) Maximum protection device size is the highest rated device that supplies drive protection. For US NEC, minimum size is 125% of motor FLA. Ratings shown are maximum.
(3) Circuit Breaker - inverse time breaker. For US NEC, minimum size is 125% of motor FLA. Ratings shown are maximum.
(4) Maximum allowable rating by US NEC. Exact size must be chosen for each installation.
(5) Motor Circuit Protector - instantaneous trip circuit breaker. For US NEC minimum size is 125% of motor/drive FLA. Ratings shown are suggested. Instantaneous trip settings must be set to US NEC code. Not to exceed 1300% FLA.

480 Volt AC Input Frames 1…6 Drive Protection Devices

Drive Catalog Number	Frame	HP Rating		Input Ratings		Dual Element Time Delay Fuse		Non-Time Delay Fuse		Circuit Breaker (3)	Motor Circuit Protector (5)	140M Motor Starter with Adjustable Current Range (6)(7)			
		ND	HD	Amps	kVA	Min. (1)	Max. (2)	Min. (3)	Max. (4)	Max. (4)	Max. (6)	Available Catalog Numbers (8)			Minimum Enclosure Volume (in.^{3}) (9)
20DD2P1	1	1	0.75	1.6	1.4	3	6	3	8	15	3	M-C2E-B25	–	–	7269
20DD3P4	1	2	1.5	2.6	2.2	4	8	4	12	15	7	M-C2E-B40	M-D8E-B40	–	7269
20DD5P0	1	3	2	3.9	3.2	6	10	6	20	20	7	M-C2E-B63	M-D8E-B63	–	7269
20DD8P0	1	5	3	6.9	5.7	10	15	10	30	30	15	M-C2E-C10	M-D8E-C10	M-F8E-C10	7269
20DD011	1	7.5	5	9.5	7.9	15	20	15	40	40	15	M-C2E-C16	M-D8E-C16	M-F8E-C16	7269
20DD014	1	10	7.5	12.5	10.4	17.5	30	17.5	50	50	20	M-C2E-C16	M-D8E-C16	M-F8E-C16	7269
20DD022	1	15	10	19.9	16.6	25	50	25	80	80	30	–	M-D8E-C25	M-F8E-C25	7269
20DD027	2	20	15	24.8	20.6	35	60	35	100	100	50	–	–	M-F8E-C32	7269
20DD034	2	25	20	31.2	25.9	40	70	40	125	125	50	–	–	M-F8E-C45	7269
20DD040	3	30	25	36.7	30.5	50	90	50	150	150	50	–	–	M-F8E-C45	13630
20DD052	3	40	30	47.7	39.7	60	110	60	200	200	70	–	–	–	–
20DD065	3	50	40	59.6	49.6	80	125	80	250	250	100	–	–	–	–
20DD077	4	60	–	72.3	60.1	100	170	100	300	300	100	–	–	–	–
		–	50	59.6	49.6	80	125	80	250	250	100	–	–	–	–
20DD096	5	75	–	90.1	74.9	125	200	125	350	350	125	–	–	–	–
		–	60	72.3	60.1	100	170	100	300	300	100	–	–	–	–
20DD125	5	100	–	117	97.6	150	250	150	500	375	150	–	–	–	–
		–	75	90.1	74.9	125	200	125	350	350	125	–	–	–	–
20DD156	6	125	–	146.5	121.7	200	350	200	600	450	250	–	–	–	–
		–	100	131	97.6	175	250	175	500	375	250	–	–	–	–
20DD180	6	150	–	169	140.5	225	400	225	600	500	250	–	–	–	–
		–	125	147	121.7	200	350	200	600	450	250	–	–	–	–
20DD248	6	200		232.8	188	300	550	300	700	700	400	–	–	–	–
			150	169	140.5	225	400	225	600	500	250	–	–	–	–

(1) Minimum protection device size is the lowest rated device that supplies maximum protection without nuisance tripping.
(2) Maximum protection device size is the highest rated device that supplies drive protection. For US NEC, minimum size is 125% of motor FLA. Ratings shown are maximum.
(3) Circuit Breaker - inverse time breaker. For US NEC, minimum size is 125% of motor FLA. Ratings shown are maximum.
(4) Maximum allowable rating by US NEC. Exact size must be chosen for each installation.
(5) Motor Circuit Protector - instantaneous trip circuit breaker. For US NEC minimum size is 125% of motor/drive FLA. Ratings shown are suggested. Instantaneous trip settings must be set to US NEC code. Not to exceed 1300% FLA.
(6) Bulletin 140M with adjustable current range should have the current trip set to the minimum range that the device will not trip.
(7) Manual Self-Protected (Type E) Combination Motor Controller, UL listed for 208 Wye or Delta, 240 Wye or Delta, 480Y/277 or 600Y/ 347. Not UL listed for use on 480V or 600V Delta/Delta, corner ground, or high-resistance ground systems.
(8) The AIC ratings of the Bulletin 140M Motor Protector Circuit Breakers may vary. See Bulletin 140M Motor Protection Circuit Breakers Application Ratings.
(9) When using a Manual Self-Protected (Type E) Combination Motor Controller, the drive must be installed in a ventilated or non-ventilated enclosure with the minimum volume specified in this column. Application specific thermal considerations may require a larger enclosure.

480 Volt AC Input Frames 9…11 Drive Protection Devices

Drive Catalog Number	Frame	HP Rating		Input Ratings	Dual Element Time Delay Fuse		Non-Time Delay Fuse		Bussmann Style Semi-Conductor Fuse	Circuit Breaker(3)	Motor Circuit Protector(5)
		ND	HD	Amps	Min. (1)	Max. (2)	Min. (1)	Max. (3)		Max. (4)	Max. (5)
20DD261	9	200	-	252	350	550	350	700	170M5813	700	400
		-	150	207	275	450	275	600	170M5813	600	300
20DD300	9	250	-	290	400	650	400	900	170M5813	900	400
		-	200	247	350	550	350	700	170M5813	700	400
20DD385	10	300	-	372	500	850	500	1100	170M5813	1100	600
		-	250	302	400	650	400	900	170M5813	900	400
20DD460	10	350	-	444	600	1000	600	1300	170M8547	1300	600
		-	300	388	500	850	500	1100	170M8547	1100	600
20DD500	10	450	-	483	650	1000	650	1500	170M8547	1500	700
		-	350	423	550	900	550	1200	170M8547	1200	600
20DD590	11	500	-	570	750 (1 per phs) 375 (2 per phs)	1300	750 (1 per phs) 375 (2 per phs)	1700	170M5813	1700	800
		-	450	524	700 (1 per phs) 350 (2 per phs)	1100	700 (1 per phs) 350 (2 per phs)	1500	170M5813	1500	700
20DD650	11	500	-	628	800 (1 per phs) 400 (2 per phs)	1400	800 (1 per phs) 400 (2 per phs)	1900	170M5813	1900	800
		-	500	594	750 (1 per phs) 375 (2 per phs)	1300	750 (1 per phs) 375 (2 per phs)	1700	170M5813	1700	800
20DD730	11	600	-	705	900 (1 per phs) 450 (2 per phs)	1600	900 (1 per phs) 450 (2 per phs)	2100	170M5813	2100	900
		-	500	655	850 (1 per phs) 425 (2 per phs)	1400	850 (1 per phs) 425 (2 per phs)	1900	170M5813	1900	900

(1) Minimum protection device size is the lowest rated device that supplies maximum protection without nuisance tripping.
(2) Maximum protection device size is the highest rated device that supplies drive protection. For US NEC, minimum size is 125% of motor FLA. Ratings shown are maximum.
(3) Circuit Breaker - inverse time breaker. For US NEC, minimum size is 125% of motor FLA. Ratings shown are maximum.
(4) Maximum allowable rating by US NEC. Exact size must be chosen for each installation.
(5) Motor Circuit Protector - instantaneous trip circuit breaker. For US NEC minimum size is 125% of motor/drive FLA. Ratings shown are suggested. Instantaneous trip settings must be set to US NEC code. Not to exceed 1300% FLA.

600 Volt AC Input Frames 1…6 Drive Protection Devices

Drive Catalog Number	Frame	HP Rating		Input Ratings		Dual Element Time Delay Fuse		Non-Time Delay Fuse		Circuit Breaker(3)	Motor Circuit Protector(5)	140M Motor Starter with Adjustable Current Range(6)(7)			
		ND	HD	Amps	kVA	Min. (1)	Max. (2)	Min. (3)	Max. (4)	Max. (4)	Max. (6)	Available Catalog Numbers (8)			Minimum Enclosure Volume (in.^{3})(9)
20DE1P7	1	1	0.75	1.3	1.4	2	4	2	6	15	3	M-C2E-B16	–	–	7269
20DE2P7	1	2	1.5	2.1	2.1	3	6	3	10	15	3	M-C2E-B25	–	–	7269
20DE3P9	1	3	2	3.0	3.1	6	9	6	15	15	7	M-C2E-B40	M-D8E-B40	–	7269
20DE6P1	1	5	3	5.3	5.5	9	12	9	20	20	15	–	M-D8E-B63	–	7269
20DE9P0	1	7.5	5	7.8	8.1	10	20	10	35	30	15	–	M-D8E-C10	M-F8E-C10	7269
20DE011	1	10	7.5	9.9	10.2	15	25	15	40	40	15	–	M-D8E-C10	M-F8E-C10	7269
20DE017	1	15	10	15.4	16.0	20	40	20	60	50	20	–	M-D8E-C16	M-F8E-C16	7269
20DE022	2	20	15	20.2	21.0	30	50	30	80	80	30	–	–	M-F8E-C25	7269
20DE027	2	25	20	24.8	25.7	35	60	35	100	100	50	–	–	M-F8E-C25	7269
20DE032	3	30	25	29.4	30.5	40	70	40	125	125	50	–	–	M-F8E-C32	13630
20DE041	3	40	30	37.6	39.1	50	90	50	150	150	100	–	–	–	–
20DE052	3	50	40	47.7	49.6	60	110	60	200	200	100	–	–	–	–
20DE062	4	60	50	58.2	60.5	80	125	80	225	225	100	–	–	–	–
20DE077	5	75	–	72.3	75.1	90	150	90	300	300	100	–	–	–	–
		–	60	58.2	60.5	90	125	90	250	250	100	–	–	–	–

Drive Catalog Number	Frame	HP Rating		Input Ratings		Dual Element Time Delay Fuse		Non-Time Delay Fuse		Circuit Breaker (3)	Motor Circuit Protector (5)	140M Motor Starter with Adjustable Current Range (6)(7)			
		ND	HD	Amps	kVA	Min. (1)	Max. (2)	Min. (3)	Max. (4)	Max. (4)	Max. (6)	Available Catalog Numbers (8)			Minimum Enclosure Volume (in.^{3}) (9)
20DE099	5	100	–	92.9	96.6	125	200	125	375	375	150	–	–	–	–
		–	75	72.3	75.1	100	175	100	300	300	100	–	–	–	–
20DE125	6	125	–	117	121.6	150	250	150	375	375	250	–	–	–	–
		–	100	93	96.6	125	200	125	375	375	150	–	–	–	–
20DE144	6	150	–	135	140.5	175	300	175	400	400	250	–	–	–	–
		–	125	117	121.6	150	275	150	375	375	250	–	–	–	–

(1) Minimum protection device size is the lowest rated device that supplies maximum protection without nuisance tripping.
(2) Maximum protection device size is the highest rated device that supplies drive protection. For US NEC, minimum size is 125% of motor FLA. Ratings shown are maximum.
(3) Circuit Breaker - inverse time breaker. For US NEC, minimum size is 125% of motor FLA. Ratings shown are maximum.
(4) Maximum allowable rating by US NEC. Exact size must be chosen for each installation.
(5) Motor Circuit Protector - instantaneous trip circuit breaker. For US NEC minimum size is 125% of motor/drive FLA. Ratings shown are suggested. Instantaneous trip settings must be set to US NEC code. Not to exceed 1300% FLA.
(6) Bulletin 140M with adjustable current range should have the current trip set to the minimum range that the device will not trip.
(7) Manual Self-Protected (Type E) Combination Motor Controller, UL listed for 208 Wye or Delta, 240 Wye or Delta, 480Y/277 or 600Y/ 347. Not UL listed for use on 480V or 600V Delta/Delta, corner ground, or high-resistance ground systems.
(8) The AIC ratings of the Bulletin 140M Motor Protector Circuit Breakers may vary. See Bulletin 140M Motor Protection Circuit Breakers Application Ratings.
(9) When using a Manual Self-Protected (Type E) Combination Motor Controller, the drive must be installed in a ventilated or non-ventilated enclosure with the minimum volume specified in this column. Application specific thermal considerations may require a larger enclosure.

690 Volt AC Input Frames 5 and 6 Drive Protection Devices

Drive Catalog Number	Frame	kW Rating		Input Ratings		Dual Element Time Delay Fuse		Non-Time Delay Fuse		Circuit Breaker(3)	Motor Circuit Protector(5)
		ND	HD	Amps	kVA	Min. (1)	Max. (2)	Min. (2)	Max. (3)	Max. (4)	Max. (5)
20DF052	5	45	–	46.9	59.5	60	110	60	175	175	–
		–	37.5	40.1	48.0	50	90	50	150	150	–
20DF060	5	55	–	57.7	68.9	80	125	80	225	225	–
		–	45	46.9	59.5	60	110	60	175	175	–
20DF082	5	75	–	79.0	94.4	100	200	100	375	375	–
		–	55	57.7	68.9	80	125	80	225	225	–
20DF098	5	90	–	94.7	113	125	200	125	375	375	–
		–	75	79.0	94.4	100	200	100	375	375	–
20DF119	6	110	–	115	138	150	250	150	400	–	–
		–	90	92.9	113	125	200	125	375	–	–
20DF142	6	132	–	139	165.9	175	300	175	450	–	–
		–	110	115	137	150	250	150	400	–	–

(1) Minimum protection device size is the lowest rated device that supplies maximum protection without nuisance tripping.
(2) Maximum protection device size is the highest rated device that supplies drive protection. For US NEC, minimum size is 125% of motor FLA. Ratings shown are maximum.
(3) Circuit Breaker - inverse time breaker. For US NEC, minimum size is 125% of motor FLA. Ratings shown are maximum.
(4) Maximum allowable rating by US NEC. Exact size must be chosen for each installation.
(5) Motor Circuit Protector - instantaneous trip circuit breaker. For US NEC minimum size is 125% of motor/drive FLA. Ratings shown are suggested. Instantaneous trip settings must be set to US NEC code. Not to exceed 1300% FLA.

540 Volt DC Input Frames 1…6 Drive Protection Devices

Drive Catalog Number	Frame	kW Rating		DC Input Ratings	Fuse	Non-Time Delay Fuse(2)
		ND	HD	Amps		
20DC3P5	1	1.5	1.1	3.7	8	JKS-8
20DC5P0	1	2.2	1.5	5.3	10	JKS-10
20DC8P7	1	4	3.0	9.3	15	HSJ15
20DC011	1	5.5	4	12.6	20	HSJ20
20DC015	1	7.5	5.5	16.8	25	HSJ25
20DC022	1	11	7.5	24	40	HSJ40
20DC030	2	15	11	33.2	50	HSJ50
20DC037	2	18.5	15	40.9	70	HSJ70
20DC043	3	22	18.5	47.5	90	HSJ90
20DC056	3	30	22	61.9	100	HSJ100
20DC072	3	37	30	80.5	125	HSJ125
20DC085	4	45	37	95.1	150	HSJ150
20DH105 (1)	5	55	–	120.2	175	HSJ175
		–	45	95.1	175	HSJ175
20DH125 (1)	5	55	–	120.2	200	HSJ200
		–	45	95.1	200	HSJ200
20DH140	5	75	–	159	250	HSJ250
		–	55	120.2	250	HSJ250
20DH170 (1)	6	90	–	192	350	HSJ350
		–	75	159	350	HSJ350
20DH205 (1)	6	110	–	226	350	HSJ350
		–	90	192	350	HSJ350
20DH260 (1)	6	132	–	298	400	HSJ400
		–	110	226	400	HSJ400

(1) Also applies to "P" voltage class. Fuses must be applied in the (+) leg and (-) leg of the DC Common Bus.
(2) The power source to Common Bus inverters must be derived from AC voltages 600V or less, as defined in NFPA70; Art 430-18 (NEC). Battery supplies or MG sets are not included. The following devices were validated to break current of the derived power DC Bus: *Disconnects*: Allen-Bradley Bulletin No. 1494, 30 to 400 A; Bulletin No. 194, 30 to 400 A, or ABB: OESA, 600 & 800 A; OESL, all sizes. *Fuses*: Bussmann Type JKS, all sizes;Type 170M, Case Sizes 1, 2 and 3, or Ferraz Shawmut Type HSJ, all sizes. For any other devices, please contact the factory.

540 Volt DC Input Frames 9…11 Drive Protection Devices

Drive Catalog Number	Frame	kW Rating		DC Input Ratings	Fuse	Bussmann Style Fuse
		ND	HD	Amps		
20DH261	9	132	-	307	500	170M6608
		-	110	241	500	170M6608
20DH300	9	160	-	353	630	170M6610
		-	132	288	630	170M6610
20DH385	10	200	-	453	700	170M6611
		-	160	353	700	170M6611
20DH460	10	250	-	541	900	170M6613
		-	200	453	900	170M6613
20DH500	10	250	-	589	500 (2 per phs)	170M6608
		-	250	494	500 (2 per phs)	170M6608
20DH590	11	315	-	695	550 (2 per phs)	170M6609
		-	250	612	550 (2 per phs)	170M6609
20DH650	11	355	-	765	630 (2 per phs)	170M6610
		-	315	695	630 (2 per phs)	170M6610
20DH730	11	400	-	859	700 (2 per phs)	170M6611
		-	355	765	700 (2 per phs)	170M6611

650 Volt DC Input Frames 1…6 Drive Protection Devices

Drive Catalog Number	Frame	HP Rating		DC Input Ratings	Fuse	Non-Time Delay Fuse(2)
		ND	HD	Amps		
20DD2P1	1	1	0.75	1.9	6	JKS-6
20DD3P4	1	2	1.5	3.0	6	JKS-6
20DD5P0	1	3	2	4.5	10	JKS-10
20DD8P0	1	5	3	8.1	15	HSJ15
20DD011	1	7.5	5	11.1	20	HSJ20
20DD014	1	10	7.5	14.6	30	HSJ30
20DD022	1	15	10	23.3	40	HSJ40
20DD027	2	20	15	28.9	50	HSJ50
20DD034	2	25	20	36.4	60	HSJ60
20DD040	3	30	25	42.9	80	HSJ80
20DD052	3	40	30	55.7	90	HSJ90
20DD065	3	50	40	69.6	100	HSJ100
20DD077	4	60	50	84.5	150	HSJ150
20DJ096 (1)	5	75	–	105.3	175	HSJ175
		–	60	84.5	175	HSJ175
20DJ125 (1)	5	100	–	137.1	200	HSJ200
		–	75	105.3	200	HSJ200
20DJ156 (1)	6	125	–	171	300	HSJ300
		–	100	137.1	300	HSJ300
20DJ180 (1)	6	150	–	198	400	HSJ400
		–	125	171.2	400	HSJ400
20DJ248 (1)	6	200	–	272	400	HSJ400
		–	150	198	400	HSJ400

(1) Also applies to "R" voltage class. Fuses must be applied in the (+) leg and (-) leg of the DC Common Bus.

(2) The power source to Common Bus inverters must be derived from AC Voltages 600V or less, as defined in NFPA70; Art 430-18 (NEC). Battery supplies or MG sets are not included. The following devices were validated to break current of the derived power DC Bus: *Disconnects*: Allen-Bradley Bulletin No. 1494, 30 to 400 A; Bulletin No. 194, 30 to 400 A, or ABB: OESA, 600 & 800 A; OESL, all sizes. *Fuses*: Bussmann Type JKS, all sizes;Type 170M, Case Sizes 1, 2 and 3, or Ferraz Shawmut Type HSJ, all sizes. For any other devices, please contact the factory.

650 Volt DC Input Frames 9…11 Drive Protection Devices

Drive Catalog Number	Frame	HP Rating		DC Input Ratings	Fuse	Bussmann Style Fuse
		ND	HD	Amps		
20DJ261	9	200	-	294	500	170M6608
		-	150	231	500	170M6608
20DJ300	9	250	-	338	630	170M6610
		-	200	294	630	170M6610
20DJ385	10	300	-	434	700	170M6611
		-	250	338	700	170M6611
20DJ460	10	350	-	519	900	170M6613
		-	300	434	900	170M6613
20DJ500	10	450	-	564	500 (2 per phs)	170M6608
		-	350	474	500 (2 per phs)	170M6608
20DJ590	11	500	-	666	550 (2 per phs)	170M6609
		-	450	587	550 (2 per phs)	170M6609
20DJ650	11	500	-	733	630 (2 per phs)	170M6610
		-	500	666	630 (2 per phs)	170M6610
20DJ730	11	600	-	824	700 (2 per phs)	170M6611
		-	500	733	700 (2 per phs)	170M6611

List of Motors with Compatible Thermistor Ratings

Motor Type	Motor (kW)	Type (Catalog No.)(1)	Poles	Base Speed (RPM)	Voltage (Vrms)	Rate Current (Arms)	Ex. Current (Arms)	GD2 (Kg/m^2)
200 STD Motor	1.5	M-51027	4	1500	180	7.5	-	0.024
	2.2	M-51028	4	1500	180	11	-	0.045
	3.7	M-51001	4	1500	180	18	-	0.066
	3.7	M-51007-1	4	1500	180	18	-	0.066
	5.5	M-51002	4	1500	180	25	-	0.12
	5.5	M-51008-1	4	1500	180	25	-	0.12
	7.5	M-51003	4	1500	180	33	-	0.15
	7.5	M-51009-1	4	1500	180	33	-	0.15
	11	M-51004	4	1500	180	47	-	0.32
	11	M-51010-1	4	1500	180	47	-	0.32
	15	M-51005	4	1500	180	63	-	0.43
	15	M-51011-1	4	1500	180	63	-	0.43
	18.5	M-51012	4	1500	180	81	-	0.71
	18.5	M-51012-1	4	1500	180	81	-	0.71
	22	M-51013	4	1500	180	95	-	0.82
	22	M-51013-1	4	1500	180	95	-	0.82
	30	M-51050	4	1500	155	145	-	0.83
	37	M-51051	4	1500	155	183	-	1.1
	45	M-51052	4	1500	155	220	-	1.4
	55	M-51053	4	1500	155	265	-	2
	75	M-51054	4	1500	155	346	-	2.7
200 SVO Motor	0.75	M-51043	4	1500	140	5.3	-	0.0075
	1.5	M-51015	4	1500	140	11.4	-	0.0100
	2.2	M-51016	4	1500	140	15	-	0.0120
	3.7	M-51017	4	1500	140	24.5	-	0.0180
	5.5	M-51018	4	1500	140	34.8	-	0.0390
	7.5	M-51019	4	1500	140	44	-	0.0470
	11	M-51020	4	1500	140	67.1	-	0.0810
	15	M-51021	4	1500	140	80.7	-	0.1370
	22	M-51022	4	1500	140	120	-	0.2000
	30	M-51023	6	1000	155	176	-	0.5800
	37	M-51024	6	1000	155	210	-	0.7000
	55	M-51026	6	1000	135	334	-	1.1000
	55	M-51027	6	500	155	315	-	4.0000
400 STD Motor	1.5	MC-M2051	4	1500	320	4.7	2.045	-
	2.2	MC-M2052	4	1500	320	6.3	3.24	-
	3.7	MC-M2053	4	1500	320	10	5.25	-
	5.5	MC-M2054	4	1500	320	15.5	8.8	-
	7.5	MC-M2055	4	1500	320	20.5	11.25	-
	11	MC-M2056	4	1500	320	29	14.3	-
	15	MC-M2057	4	1500	320	37	16.4	-
	18.5	MC-M2058	4	1500	320	45	19.65	-
	22	MC-M2059	4	1500	320	53	23	-
	30	MC-M2060	4	1500	320	71	28.15	-
	37	MC-M2061	4	1500	320	85	29.7	-
	45	MC-M2062	4	1500	320	97	30.55	-
	55	MC-M2063	4	1500	320	121	-	-
	75	MC-M2064	4	1500	320	163	-	-
	90	MC-M2065	4	1500	320	188	-	-
	110	MC-M2066	4	1500	320	227	-	-
	132	MC-M2067	4	1500	320	280	-	-
	160	MC-M2068	4	1500	320	335	-	-
	200	MC-M2069	4	1500	320	375	-	-

Motor Type	Motor (kW)	Type (Catalog No.)(1)	Poles	Base Speed (RPM)	Voltage (Vrms)	Rate Current (Arms)	Ex. Current (Arms)	GD2 (Kg/m^2)
400 SVO Motor	1.5	MC-M20	4	1500	280	5.4	-	-
	2.2	MC-M20	4	1500	280	7.3	-	-
	3.7	MC-M20	4	1500	280	12.3	-	-
	5.5	MC-M20	4	1500	280	17.3	-	-
	7.5	MC-M20	4	1500	280	22	-	-
	11	MC-M20	4	1500	280	34	-	-
	15	MC-M20	4	1500	280	42	-	-
	22	MC-M20	4	1500	280	58.5	-	-
	22	MC-M20	4	1500	280	58.5	-	-
	30	MC-M20	6	1000	280	88	-	-
	37	MC-M20	6	1000	280	125	-	-

(1) Manufacturer, Reliance Electric-Japan, catalog number for ordering.

Spare Connectors

This section provides part numbers for “Customer-I/O” plugs (both Allen-Bradley numbers and connector manufacture numbers). This allows users to procure spare or replacement parts from Allen-Bradley or directly from the connector manufacturer.

Main Control Board

Phoenix Contact manufactures all four “Customer-I/O” connectors for the Main Control Board, according to Allen-Bradley specifications. Allen-Bradley specifies custom markings on standard Phoenix Contact plugs.

Connector	Allen-Bradley Number	Phoenix Contact Standard Number
TB1 - Row T	305334-Q01	MCV 1,5/13-ST3, 81 27 21 1
TB1 - Row B	305334-Q02	MCV 1,5/13-ST3, 81 27 21 1
TB2 - Row T	305335-Q01	MCV 1,5/13-ST3, 81 18 03 68 8
TB2 - Row B	305335-Q02	MCV 1,5/13-ST3, 81 18 03 68 8

High Resolution Encoder Interface Board

Weidmuller manufactures the “Customer-I/O” plug on the High Resolution Encoder Interface Board.

Connector	Allen-Bradley Number	Weidmuller Number
P1	S94262912	BL3.50/90/12BK

Resolver Interface Board

Weidmuller manufactures the “Customer-I/O” plug on the Resolver Interface Board.

Connector	Allen-Bradley Number	Weidmuller Number
P1	S94262908	BL3.50/90/8BK

Dimensions

Table A.A PowerFlex 700S Frames

Frame	AC Input												DC Input			
	208		240		380 . . . 400V		480V		600V		690V		540V		650V	
	ND HP	HD HP	ND HP	HD HP	ND kW	HD kW	ND HP	HD HP	ND HP	HD HP	ND HP	HD HP	ND HP	HD HP	ND HP	HD HP
1	0.75	0.37	1.0	0.75	0.75	0.55	1	0.75	1	0.5	–	–	–	–	–	–
	1.5	0.75	2.0	1.5	1.5	0.75	2	1.5	2	1	–	–	–	–	–	–
	2.2	1.5	3.0	2.0	2.2	1.5	3	2	3	2	–	–	–	–	–	–
	4.0	2.2	5.0	3.0	4.0	2.2	5	3	5	3	–	–	–	–	–	–
	5.5	4.0	7.5	5.0	5.5	4.0	7.5	5	7.5	5	–	–	–	–	–	–
	–	–	–	–	7.5	5.5	10	7.5	10	7.5	–	–	–	–	–	–
	–	–	–	–	11	7.5	15	10	15	10	–	–	–	–	–	–
2	7.5	5.5	10	7.5	15	11	20	15	20	15	–	–	–	–	–	–
	–	–			18.5	15	25	20	25	20	–	–	–	–	–	–
3	11	7.5	15	10	22	18.5	30	25	30	25	–	–	–	–	–	–
	15	11	20	15	30	22	40	30	40	30	–	–	–	–	–	–
	–	–	–	–	37	30	50	40	50	40	–	–	–	–	–	–
4	18.5	15	25	20	45	37	60	50	60	50	–	–	–	–	–	–
	22	18.5	30	25	–	–	–	–	–	–			–	–	–	–
5	30	22	40	30	55	45	75	60	75	60	75	55	55	45	75	60
	30	30	50	40	55	45	100	75	100	75	90	75	55	45	75	60
	–	–	–	–	–	–	–	–	–	–	–	–	55	45	100	75
	–	–	–	–	–	–	–	–	–	–	–	–	55	45	100	75
6	45	37	60	50	90	75	125	100	125	100	110	90	90	75	125	100
	55	45	75	60	110	90	150	125	150	125	132	110	90	75	125	100
	66	55	100	75	132	110	200	150	–	–	–	–	110	90	150	125
	–	–	–	–	–	–	–	–	–	–	–	–	110	90	150	125
	–	–	–	–	–	–	–	–	–	–	–	–	132	110	200	150
	–	–	–	–	–	–	–	–	–	–	–	–	132	110	200	150
9	–	–	–	–	132	110	200	150	150	150	160	132	–	–	–	–
	–	–	–	–	160	130	250	200	200	150	200	160	–	–	–	–
10	–	–	–	–	200	160	300	250	250	200	250	200	–	–	–	–
	–	–	–	–	250	200	350	300	350	250	315	250	–	–	–	–
	–	–	–	–	250	250	450	350	400	350	355	315	–	–	–	–
	–	–	–	–	–	–	–	–	450	350	400	315	–	–	–	–
11	–	–	–	–	315	250	500	450	450	400	450	355	–	–	–	–
	–	–	–	–	355	315	500	500	500	450	500	450	–	–	–	–
	–	–	–	–	400	355	600	500	600	500	560	500	–	–	–	–

Figure A.1 PowerFlex 700S Frame 1-3 (*Frame 1 Shown*)

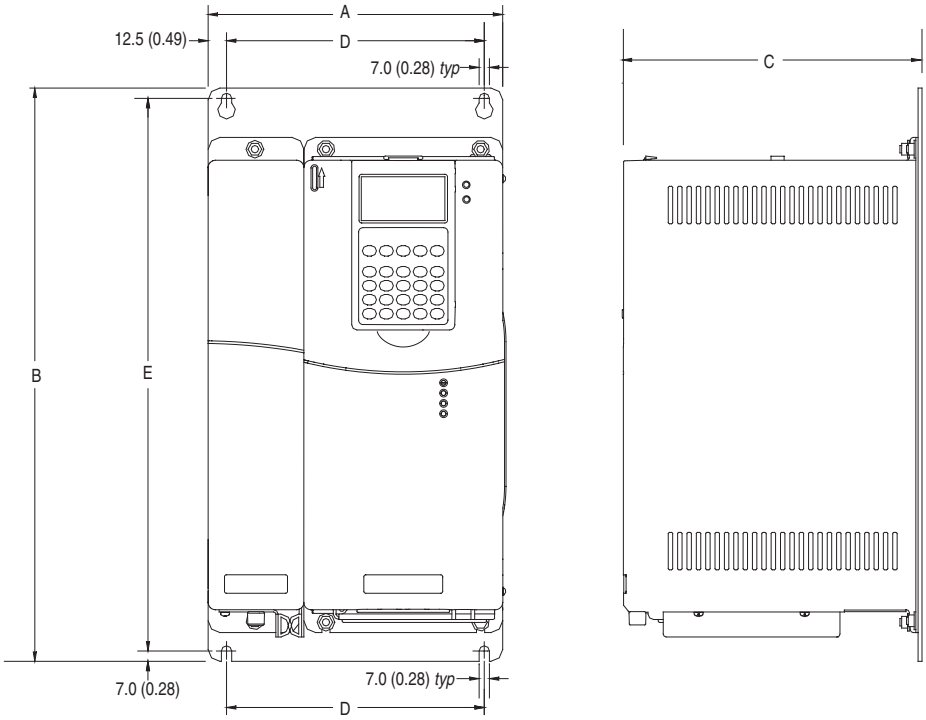

Dimensions are in millimeters and (inches)

Frame	A	B	C	D	E	Weight[1] kg (lbs.) Drive
1	200.0 (7.87)	389.0 (15.31)	202.8 (7.98)	175.0 (6.89)	375.0 (14.76)	11.3 (24.92)
2	285.0 (11.22)	389.0 (15.31)	202.7 (7.98)	250.0 (9.84)	375.0 (14.76)	18.4 (40.57)
3	285.0 (11.22)	564.0 (22.20)	202.7 (7.98)	250.0 (9.84)	550.0 (21.65)	26.6 (58.65)

(1) Weights include HIM, DriveLogix controller with ControlNet daughtercard, Hi-Resolution Encoder Option, and 20-COMM-C ControlNet adapter

Figure A.2 PowerFlex 700S Frame 4

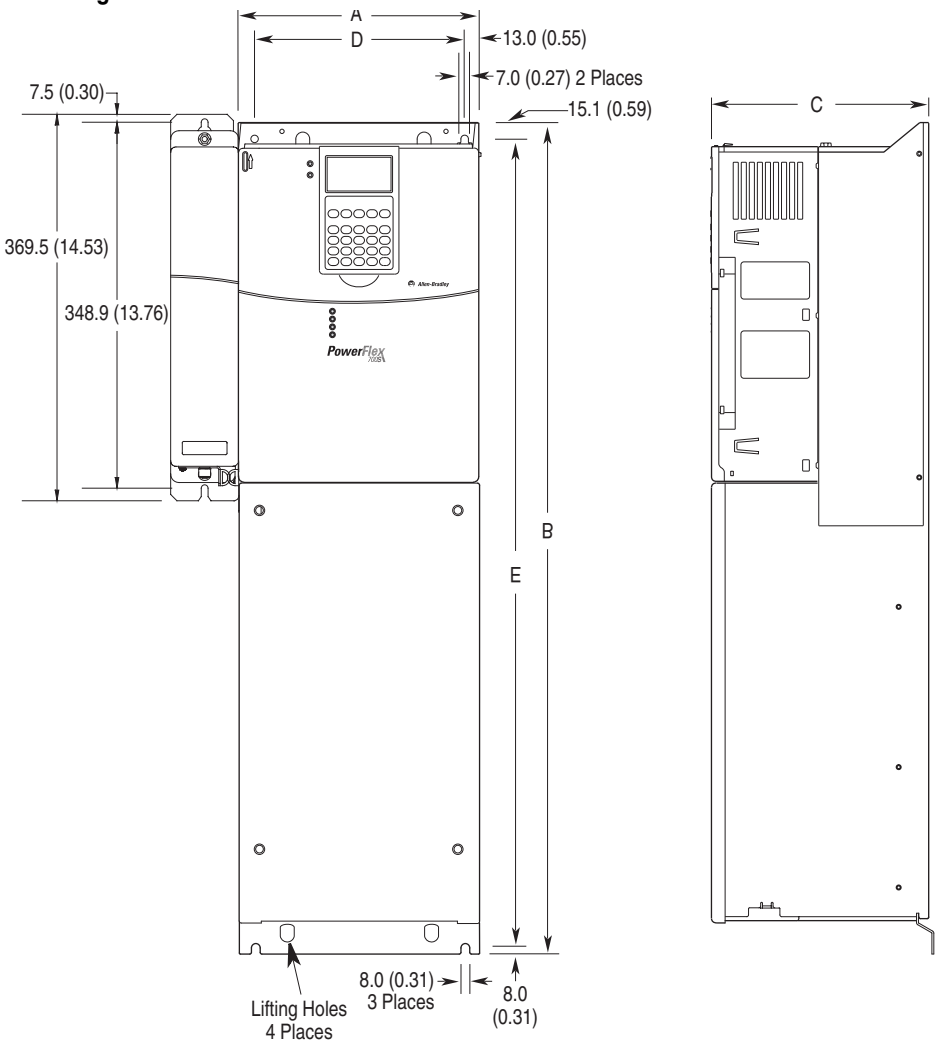

Dimensions are in millimeters and (inches)

Frame	A *(Max.)*	B	C *(Max.)*	D	E	Approx. Weight (1) *kg (lbs.)*	
						Drive	Drive & Packaging
4	220.8 (8.69)	758.8 (29.9)	201.8 (7.94)	192.0 (7.56)	741.7 (29.2)	28.4 (62.5)	29.03 (63.9)

(1) Weights include HIM and Standard I/O.

Figure A.3 PowerFlex 700S Frame 5

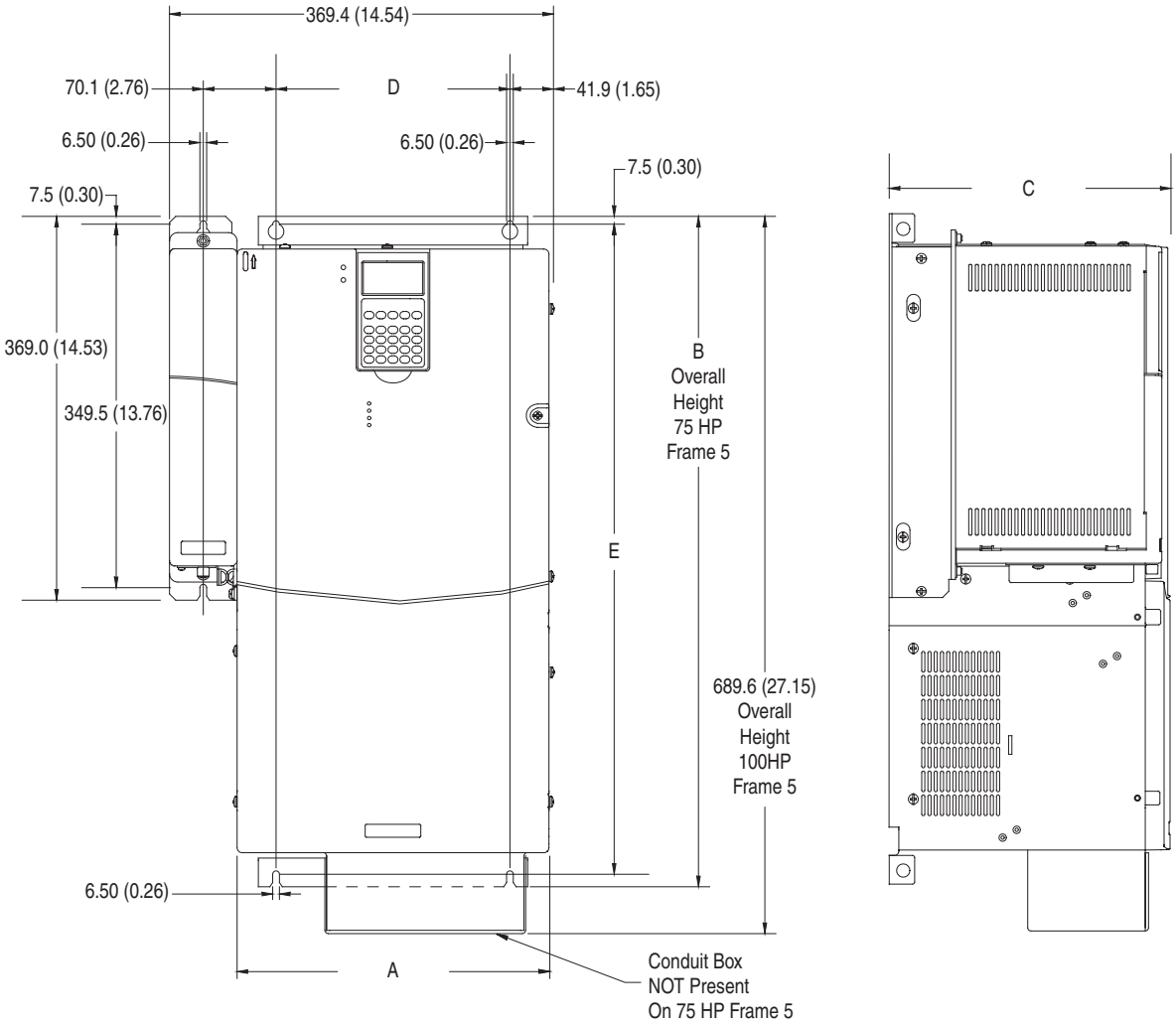

Dimensions are in millimeters and (inches)

Weight(1) kg (lbs.)
Drive
42.6 (93.93)

(1) Weights include HIM, DriveLogix controller with ControlNet daughtercard, Hi-Resolution Encoder Option, and 20-COMM-C ControlNet adapter

Figure A.4 PowerFlex 700S Frame 6

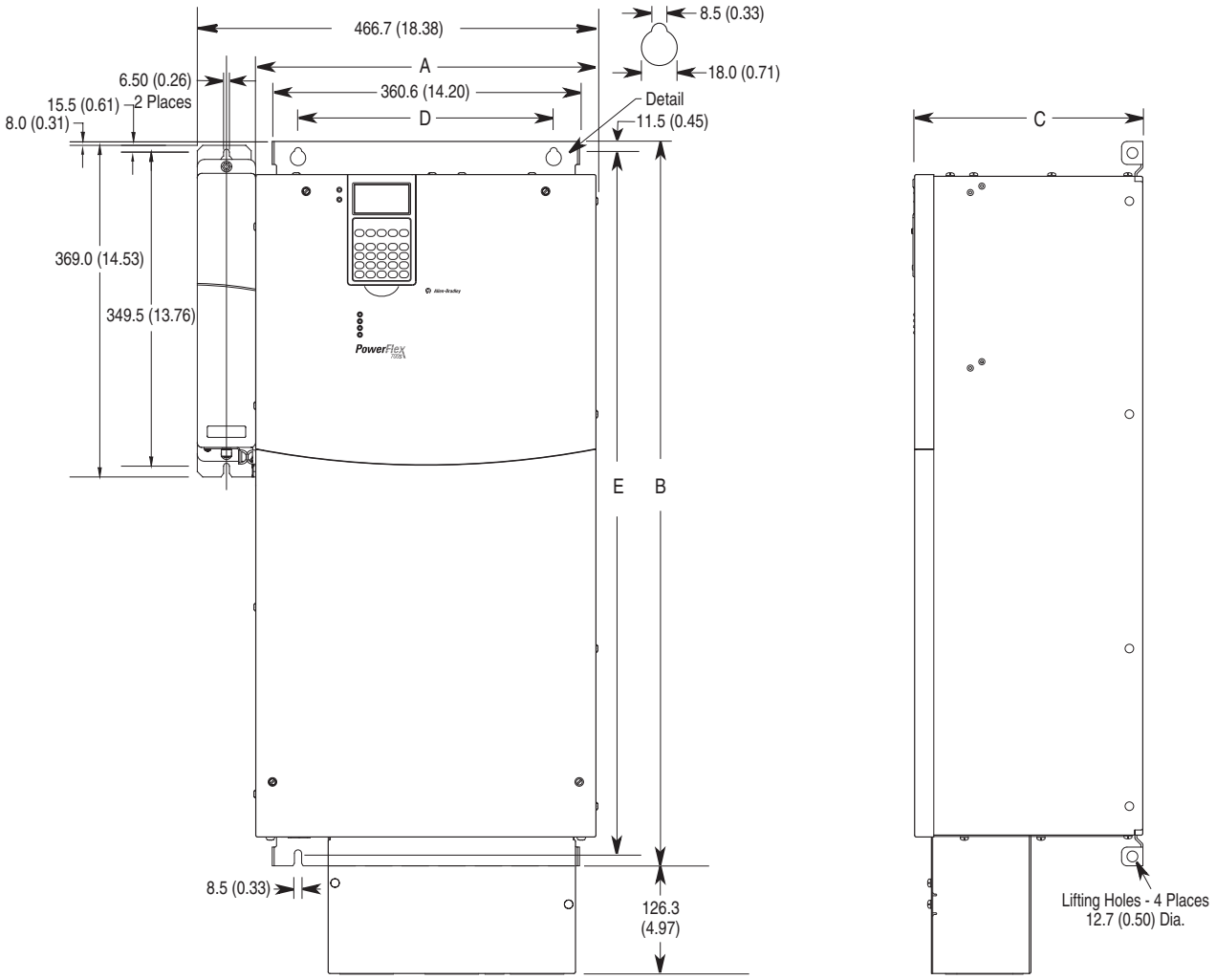

Dimensions are in millimeters and (inches)

Frame	A *(Max.)*	B	C *(Max.)*	D	E	Weight(1) kg (lbs.) Drive	Drive and Packaging
6	403.80 (15.90)	850.00 (33.46)	275.50 (10.85)	300.00 (11.81)	825.0 (157.5)	70.31 (154.70)	89.09 (196.00)

(1) Weights include HIM, DriveLogix controller with ControlNet daughtercard, Hi-Resolution Encoder Option, and 20-COMM-C ControlNet adapter

Figure A.5 PowerFlex 700S Frame 9

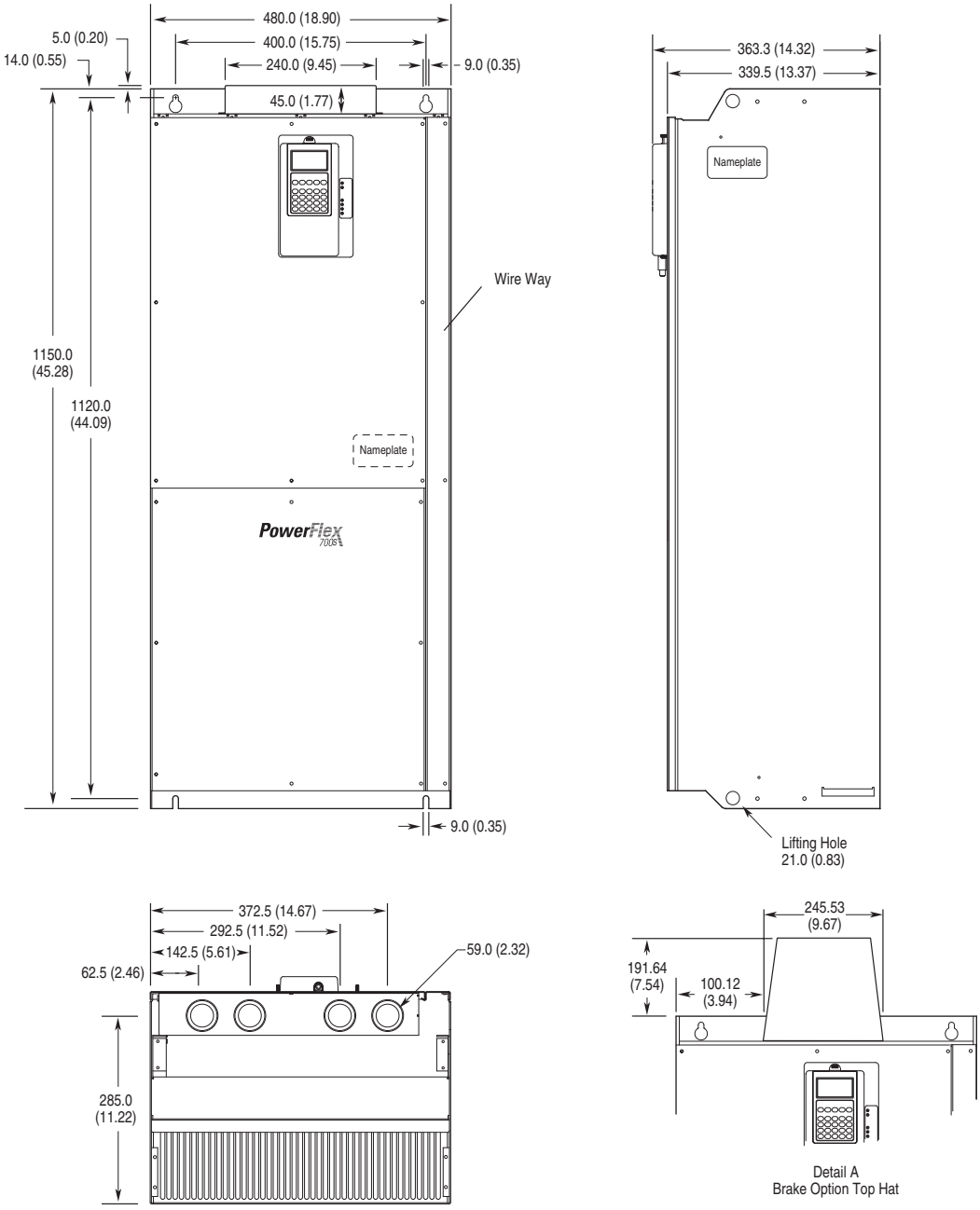

Dimensions are in millimeters and (inches)

Frame	A	B	C	D	E	Weight *kg (lbs.)* Drive	Weight *kg (lbs.)* Drive & Packaging
9	480 (18.9)	1150 (45.28)	339 (13.37)	400 (15.75)	1120 (44.09)	142.9 (315)	176.9 (390)

Figure A.6 PowerFlex 700S Frame 10

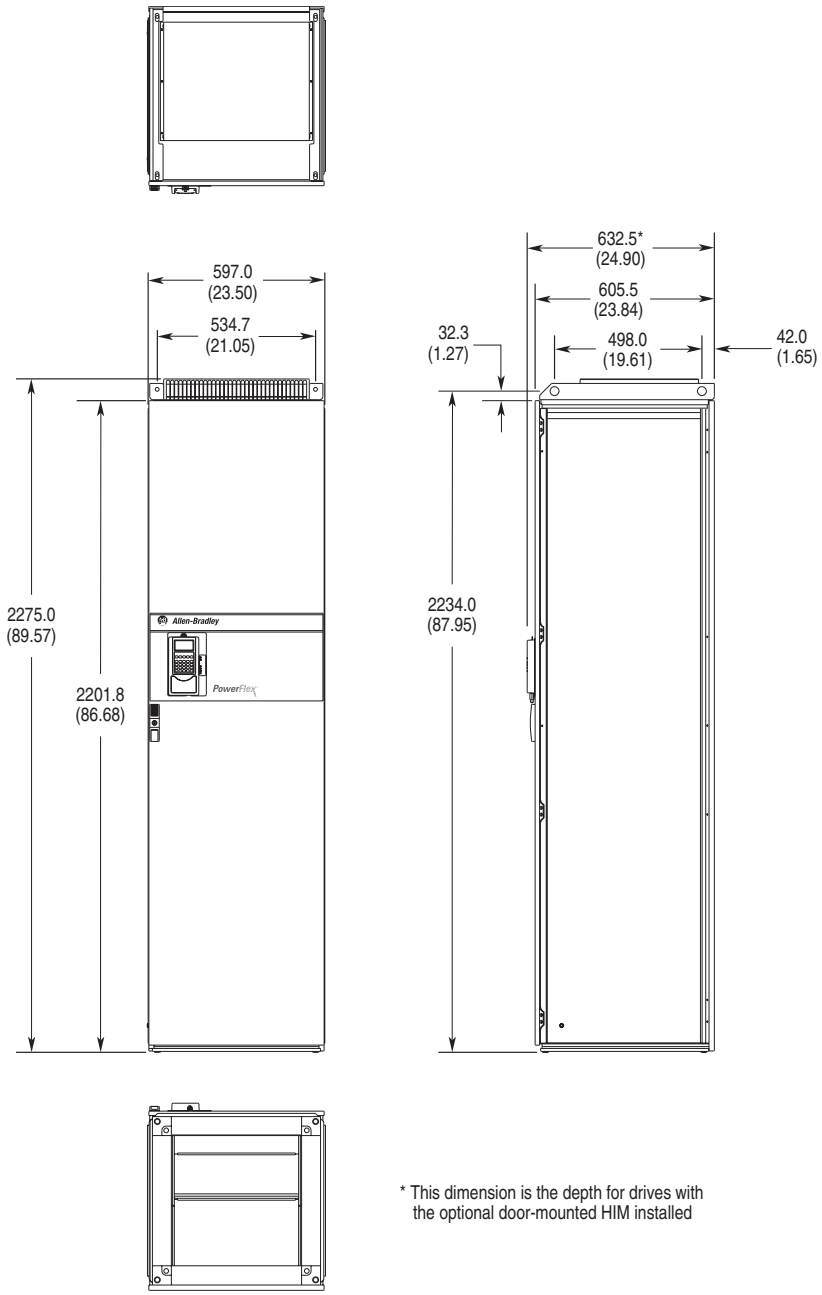

Dimensions are in millimeters and (inches)

Frame	A	B	C	D	E	Weight *kg (lbs.)* Drive	Drive & Packaging
10	597 (23.5)	2275 (89.57)	632.45 (24.9)	534 (21.05)	2201.75 (86.68)	432 (950)	447 (985)

Figure A.7 PowerFlex 700S Frame 11

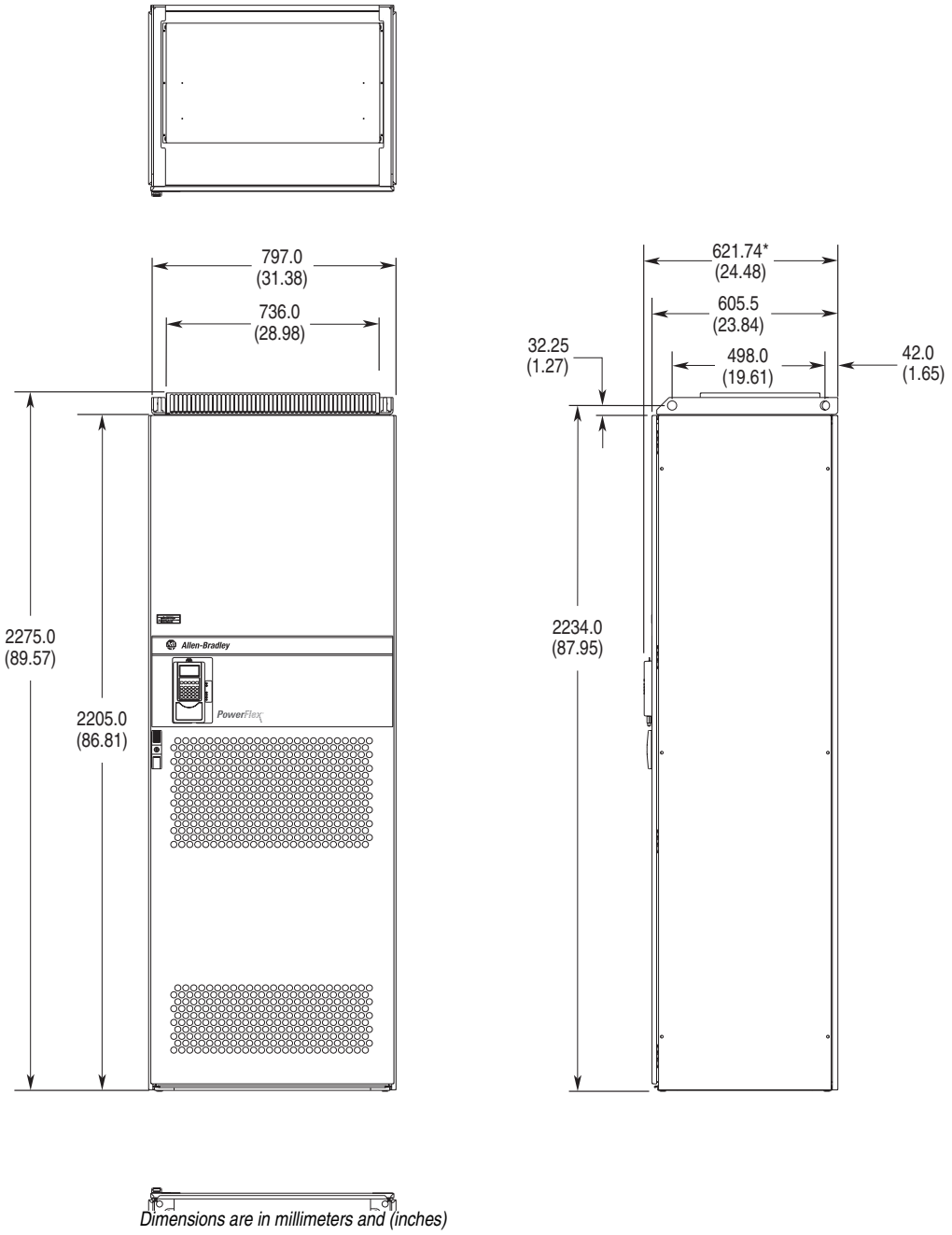

Dimensions are in millimeters and (inches)

Figure A.8 PowerFlex 700S Bottom View Dimensions

Frame 1

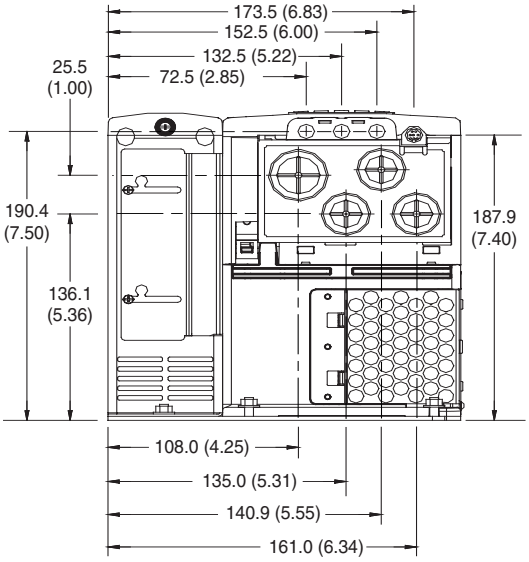

Frame 2

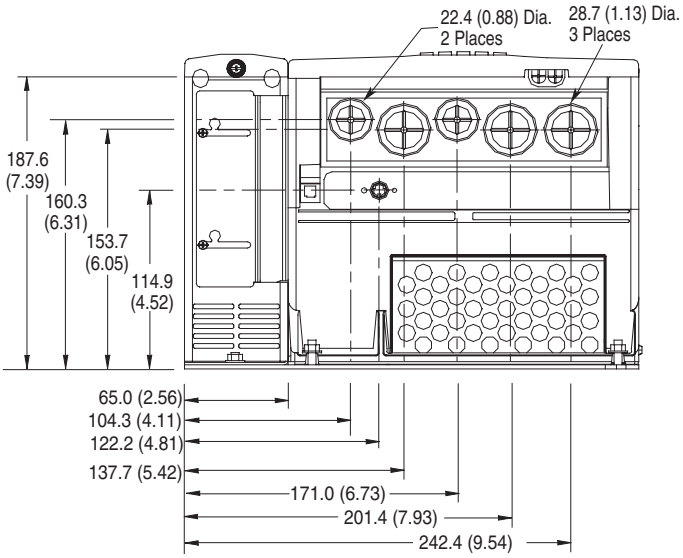

Frame 3 - All Drives *except* 50 HP, 480V (37 kW, 400V)

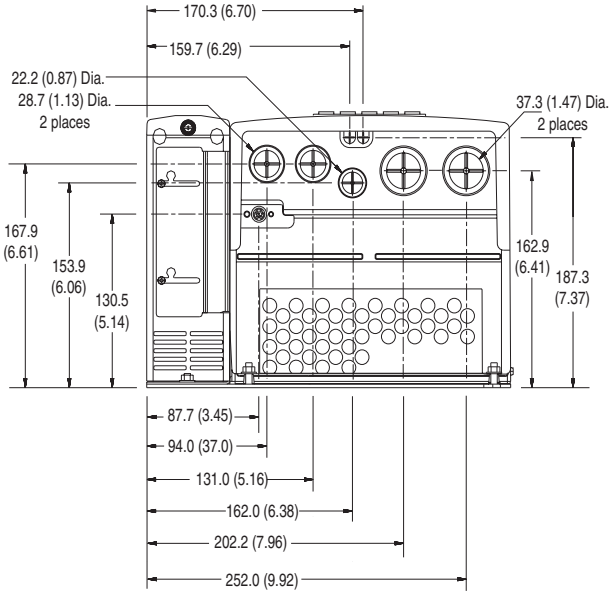

Frame 3 - 50 HP, 480V (37 kW, 400V) Normal Duty Drive

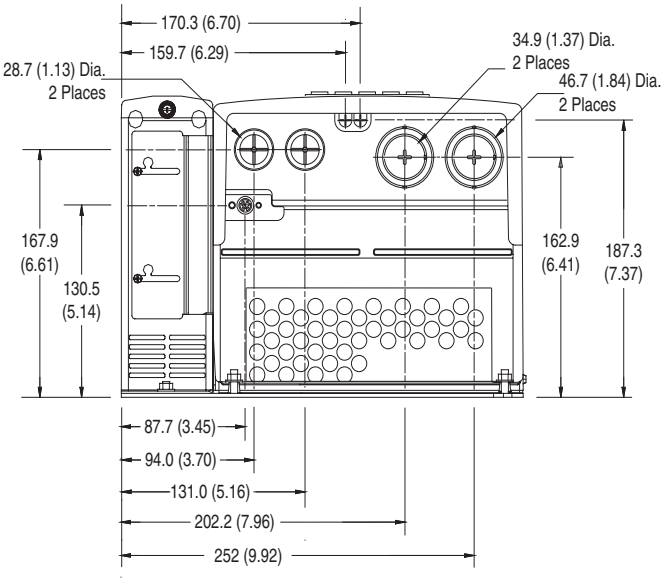

Dimensions are in millimeters and (inches)

Figure A.9 PowerFlex 700S Bottom View Dimensions (continued)

Frame 4

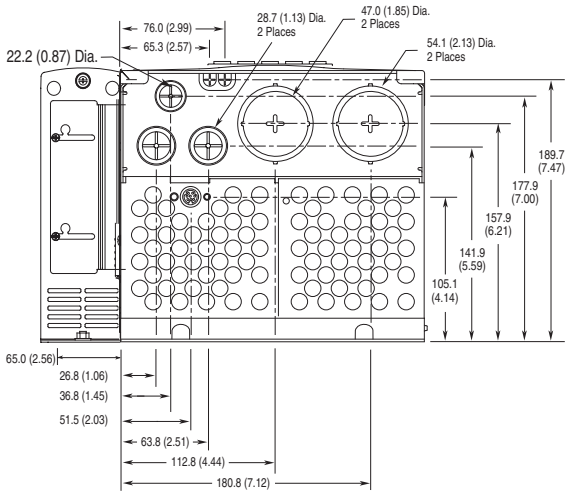

Frame 5 - 75 HP, 480V (55 kW, 400V) Normal Duty Drive

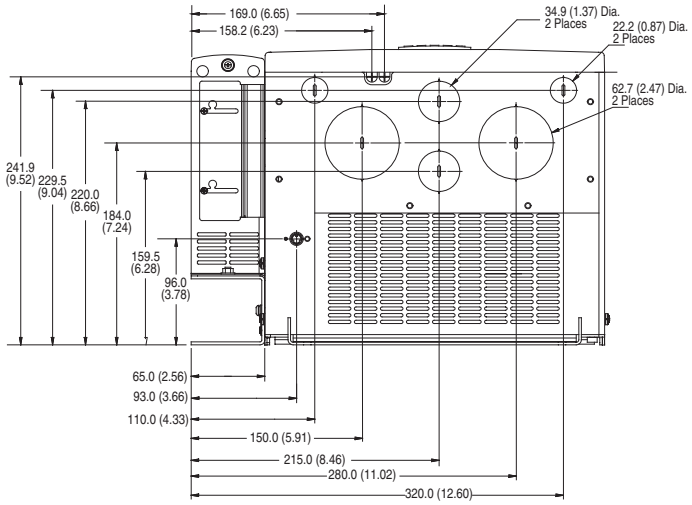

Frame 5 - 100 HP, 480V (55 kW, 400V) Normal Duty Drive

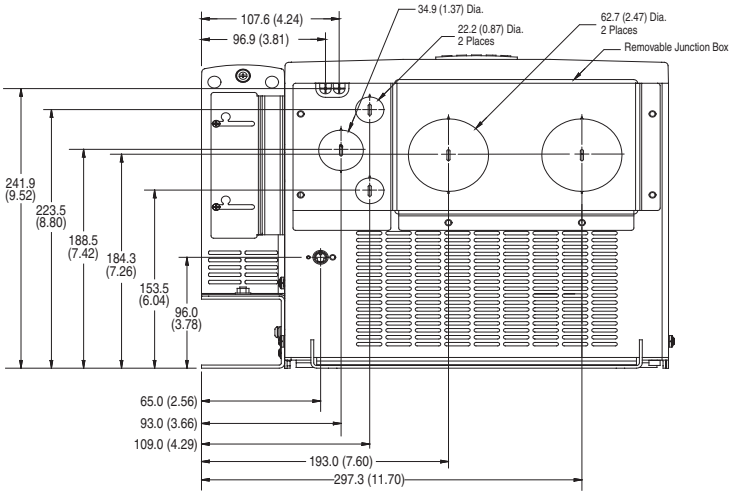

Frame 6

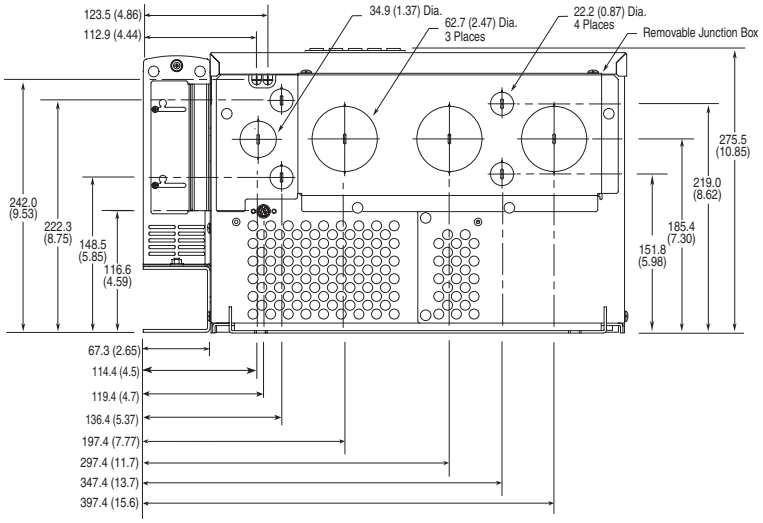

Dimensions are in millimeters and (inches)

Control Block Diagrams

List of Control Block Diagrams

Flow diagrams on the following pages illustrate the drives' control algorithms.

For Information on …	See Page...
Overview	B-2
Speed Control - Reference	B-3
Speed Control - Regulator	B-4
Process Control	B-5
Position Control - Interpolated/Direct	B-6
Position Control - Point to Point	B-7
Position Control - Auxiliary/Control	B-8
Torque Control-Torque	B-9
Torque Control-Current	B-10
Speed/Position Feedback	B-11
Inputs & Outputs - Discrete	B-12
Inputs & Outputs - Analog	B-13
Inverter Overload IT	B-14
User Functions	B-15
Control Logic	B-16
Trend	B-17

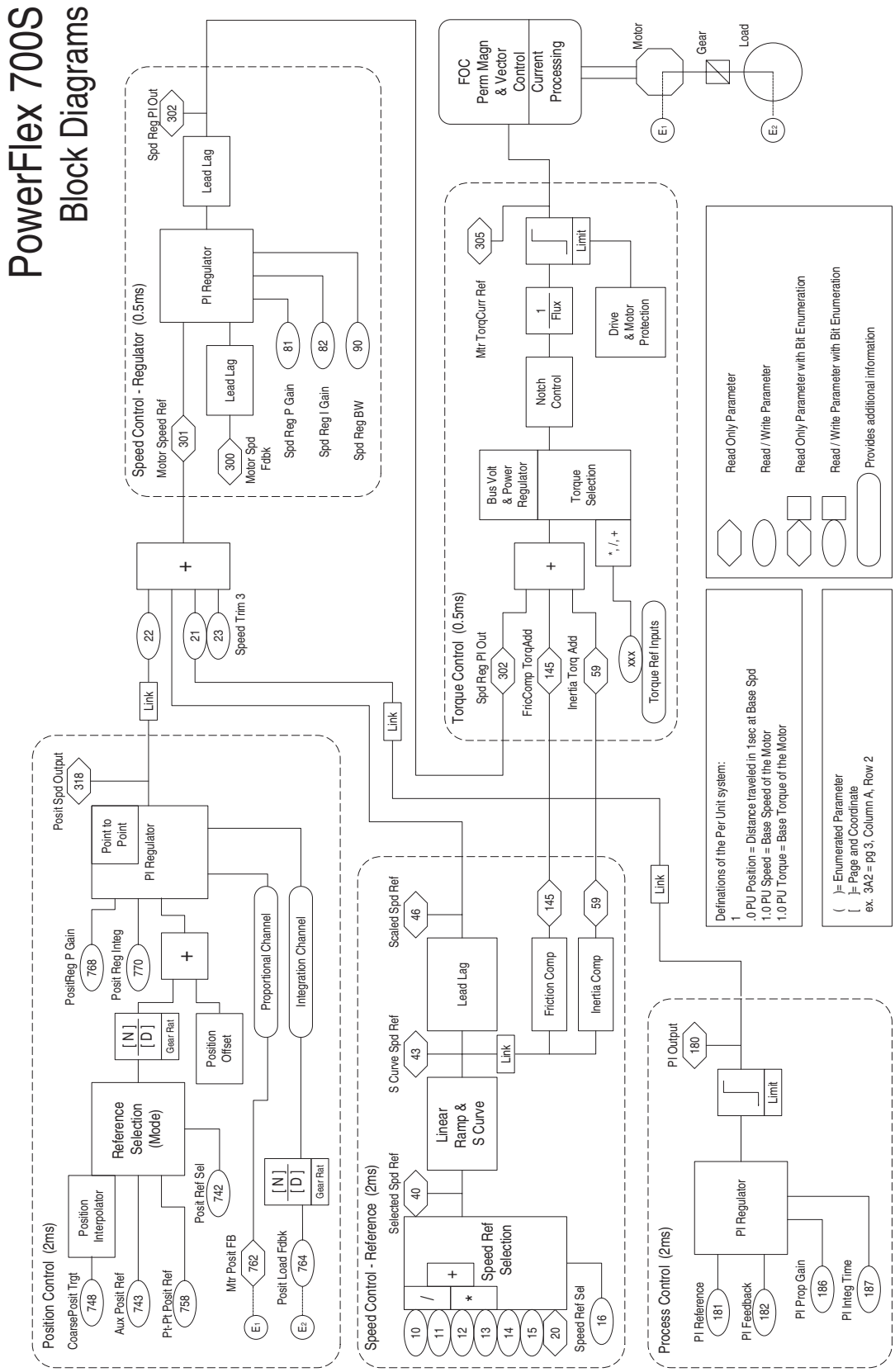
PowerFlex 700S
Block Diagrams
Speed Control - Regulator (0.5ms)
Spd Reg PI Out
302
Lead Lag
PI Regulator
Motor Speed Ref
301
Lead Lag
300
Motor Spd Fdbk
81
Spd Reg P Gain
82
Spd Reg I Gain
90
Spd Reg BW
+
22
21
23
Speed Trim 3
Link
FOC
Perm Magn
& Vector
Control
Current
Processing
Motor
Gear
Load
E1
E2
Torque Control (0.5ms)
Mtr TorqCurr Ref
305
Limit
1
Flux
Drive
& Motor
Protection
Notch
Control
Bus Volt
& Power
Regulator
Torque
Selection
+
* , / , +
Spd Reg PI Out
302
FricComp TorqAdd
145
Inertia Torq Add
59
xxx
Torque Ref Inputs
Link
Read Only Parameter
Read / Write Parameter
Read Only Parameter with Bit Enumeration
Read / Write Parameter with Bit Enumeration
Provides additional information
Definations of the Per Unit system:
1
.0 PU Position = Distance traveled in 1sec at Base Spd
1.0 PU Speed = Base Speed of the Motor
1.0 PU Torque = Base Torque of the Motor
( )= Enumerated Parameter
[ ]= Page and Coordinate
ex. 3A2 = pg 3, Column A, Row 2
Position Control (2ms)
Posit Spd Output
318
Point to
Point
PI Regulator
PositReg P Gain
768
Posit Reg Integ
770
+
[N]
[D]
Gear Rat
Position
Offset
Proportional Channel
Integration Channel
Reference
Selection
(Mode)
Position
Interpolator
Posit Ref Sel
742
[N]
[D]
Gear Rat
CoarsePosit Trgt
748
Aux Posit Ref
743
Pt-Pt Posit Ref
758
Mtr Posit FB
762
Posit Load Fdbk
764
E1
E2
Speed Control - Reference (2ms)
Scaled Spd Ref
46
Lead Lag
S Curve Spd Ref
43
Link
Linear
Ramp &
S Curve
Selected Spd Ref
40
Speed Ref
Selection
/
*
+
10
11
12
13
14
15
20
Speed Ref Sel
16
145
Friction Comp
59
Inertia Comp
Link
Process Control (2ms)
PI Output
180
Limit
PI Regulator
PI Reference
181
PI Feedback
182
PI Prop Gain
186
PI Integ Time
187

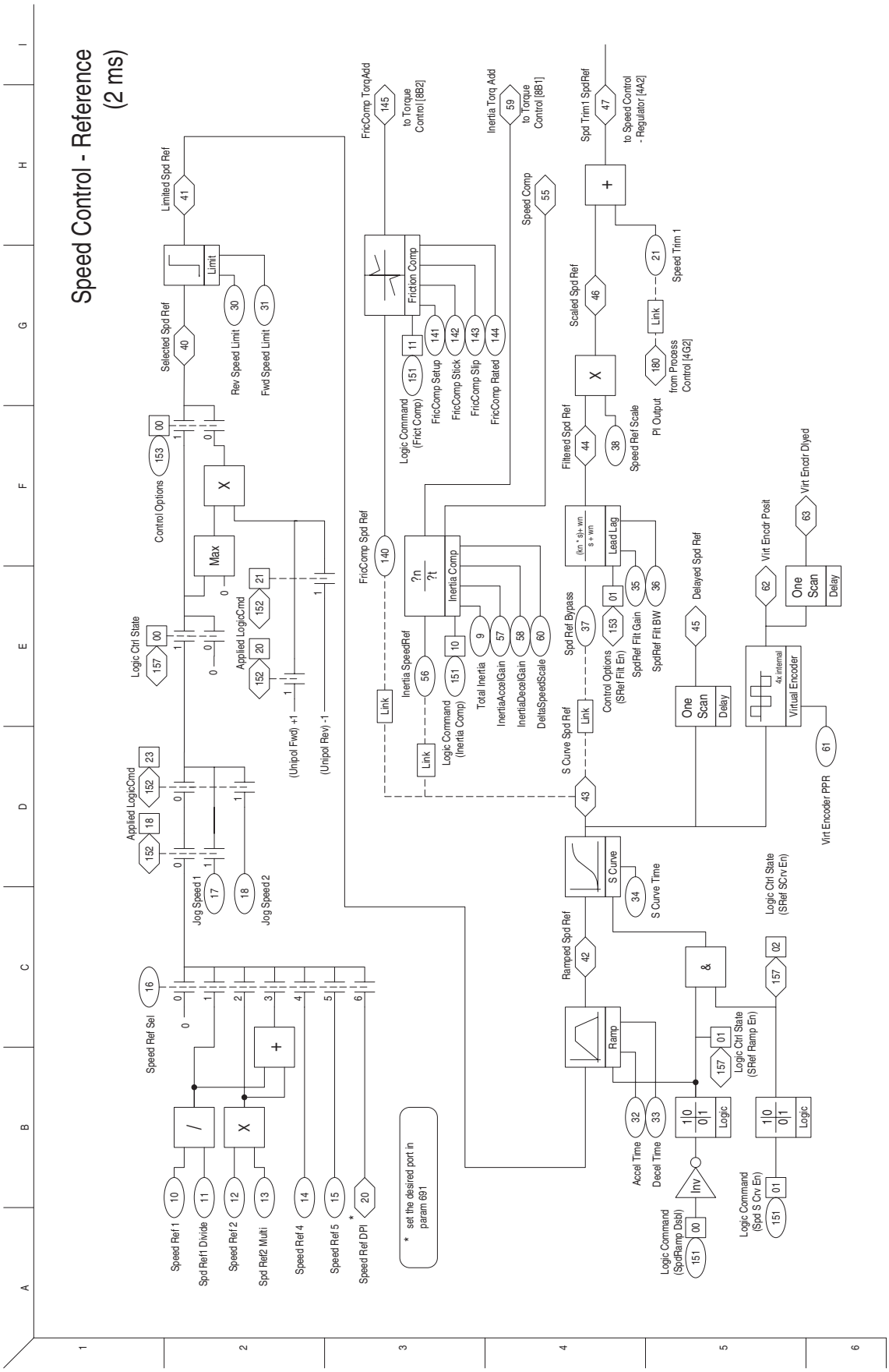
Speed Control - Reference
(2 ms)
Speed Ref Sel
Speed Ref 1
Spd Ref1 Divide
Speed Ref 2
Spd Ref2 Multi
Speed Ref 4
Speed Ref 5
Speed Ref DPI
* set the desired port in param 691
Applied LogicCmd
Jog Speed 1
Jog Speed 2
Logic Ctrl State
Control Options
Max
Limit
Selected Spd Ref
Limited Spd Ref
Rev Speed Limit
Fwd Speed Limit
(Unipol Fwd) +1
(Unipol Rev) -1
FricComp Spd Ref
FricComp TorqAdd
to Torque Control [8B2]
Friction Comp
Logic Command (Frict Comp)
FricComp Setup
FricComp Stick
FricComp Slip
FricComp Rated
Inertia Torq Add
to Torque Control [8B1]
Speed Comp
Inertia Comp
Inertia SpeedRef
Logic Command (Inertia Comp)
Total Inertia
InertiaAccelGain
InertiaDecelGain
DeltaSpeedScale
Link
S Curve Spd Ref
Spd Ref Bypass
Control Options (SRef Filt En)
SpdRef Filt Gain
SpdRef Filt BW
Lead Lag
Filtered Spd Ref
Speed Ref Scale
PI Output
Scaled Spd Ref
Spd Trim1 SpdRef
to Speed Control - Regulator [4A2]
Speed Trim 1
from Process Control [4G2]
Delayed Spd Ref
One Scan
Delay
Virtual Encoder
4X internal
Virt Encdr Posit
Virt Encdr Dlyed
Virt Encoder PPR
S Curve
S Curve Time
Ramped Spd Ref
Ramp
Accel Time
Decel Time
Logic Ctrl State (SRef Ramp En)
Logic Ctrl State (SRef SCrv En)
Logic
Inv
Logic Command (SpdRamp Dsbl)
Logic Command (Spd S Crv En)

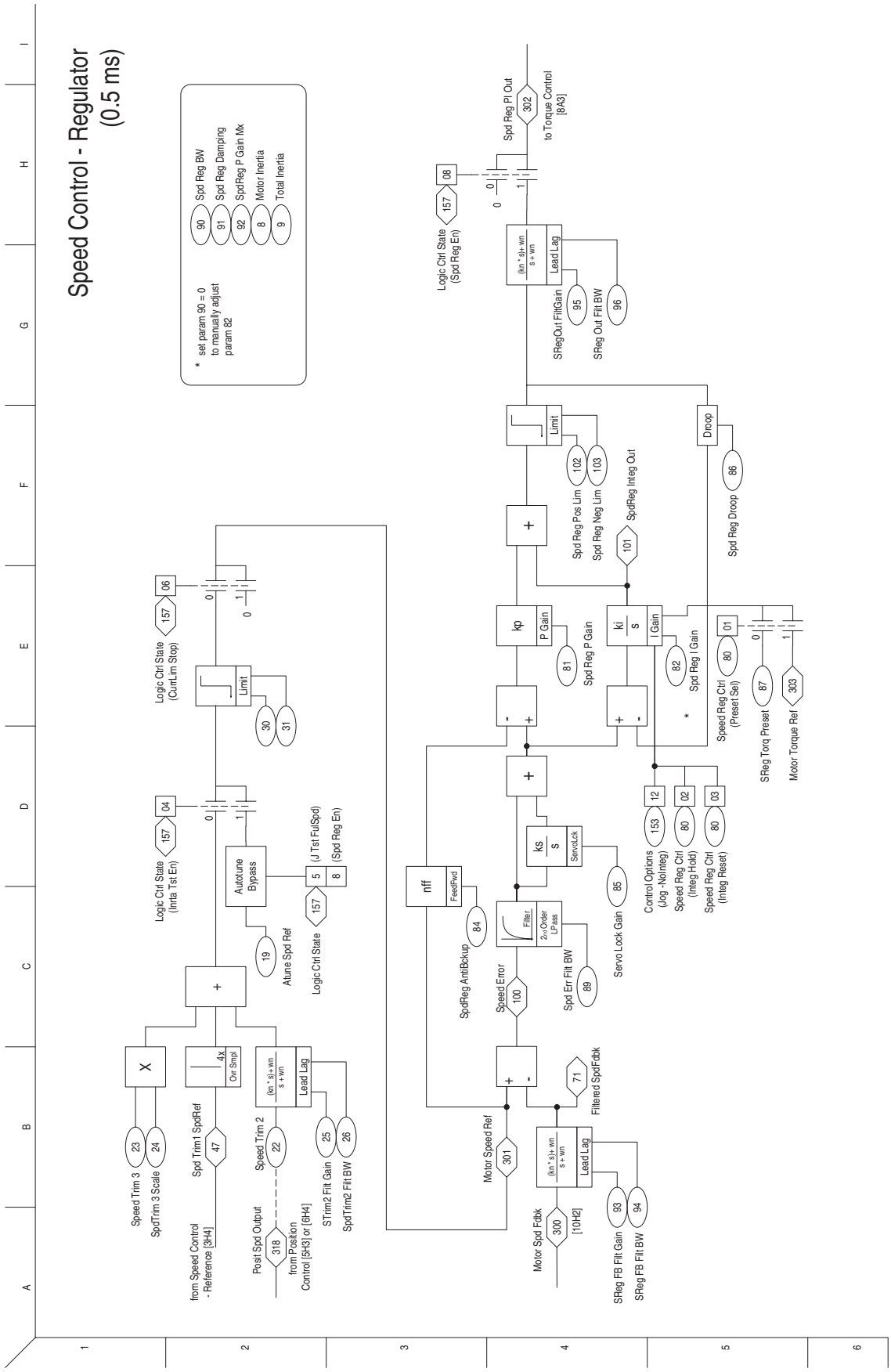
Speed Control - Regulator
(0.5 ms)
* set param 90 = 0
to manually adjust
param 82
90 Spd Reg BW
91 Spd Reg Damping
92 SpdReg P Gain Mx
8 Motor Inertia
9 Total Inertia
Spd Reg PI Out
302
to Torque Control
[8A3]
Logic Ctrl State
(Spd Reg En)
157
08
Lead Lag
SRegOut FiltGain
95
SRegOut Filt BW
96
Limit
102
103
Spd Reg Pos Lim
Spd Reg Neg Lim
SpdReg Integ Out
101
Droop
86
Spd Reg Droop
kp
P Gain
81
Spd Reg P Gain
ki
s
I Gain
82
Spd Reg I Gain
Speed Reg Ctrl
(Preset Sel)
80
01
SReg Torq Preset
87
Motor Torque Ref
303
12
02
03
Control Options
(Jog -NoInteg)
153
Speed Reg Ctrl
(Integ Hold)
Speed Reg Ctrl
(Integ Reset)
ks
s
ServoLck
85
Servo Lock Gain
Filter
2nd Order
LPass
Spd Err Filt BW
89
nff
FeedFwd
84
SpdReg AntiBckup
Speed Error
100
Motor Speed Ref
301
71
Filtered SpdFdbk
Lead Lag
93
94
SReg FB Filt Gain
SReg FB Filt BW
Motor Spd Fdbk
300
[10H2]
Limit
30
31
Logic Ctrl State
(CurtLim Stop)
157
06
Autotune
Bypass
5
8
(J Tst FulSpd)
(Spd Reg En)
Logic Ctrl State
157
Atune Spd Ref
19
Logic Ctrl State
(Inrta Tst En)
157
04
Lead Lag
Speed Trim 2
22
STrim2 Filt Gain
25
SpdTrim2 Filt BW
26
Ovr Smpl
4x
Spd Trim1 SpdRef
47
Posit Spd Output
318
from Position
Control [5H3] or [6H4]
Speed Trim 3
23
SpdTrim 3 Scale
24
from Speed Control
- Reference [3H4]

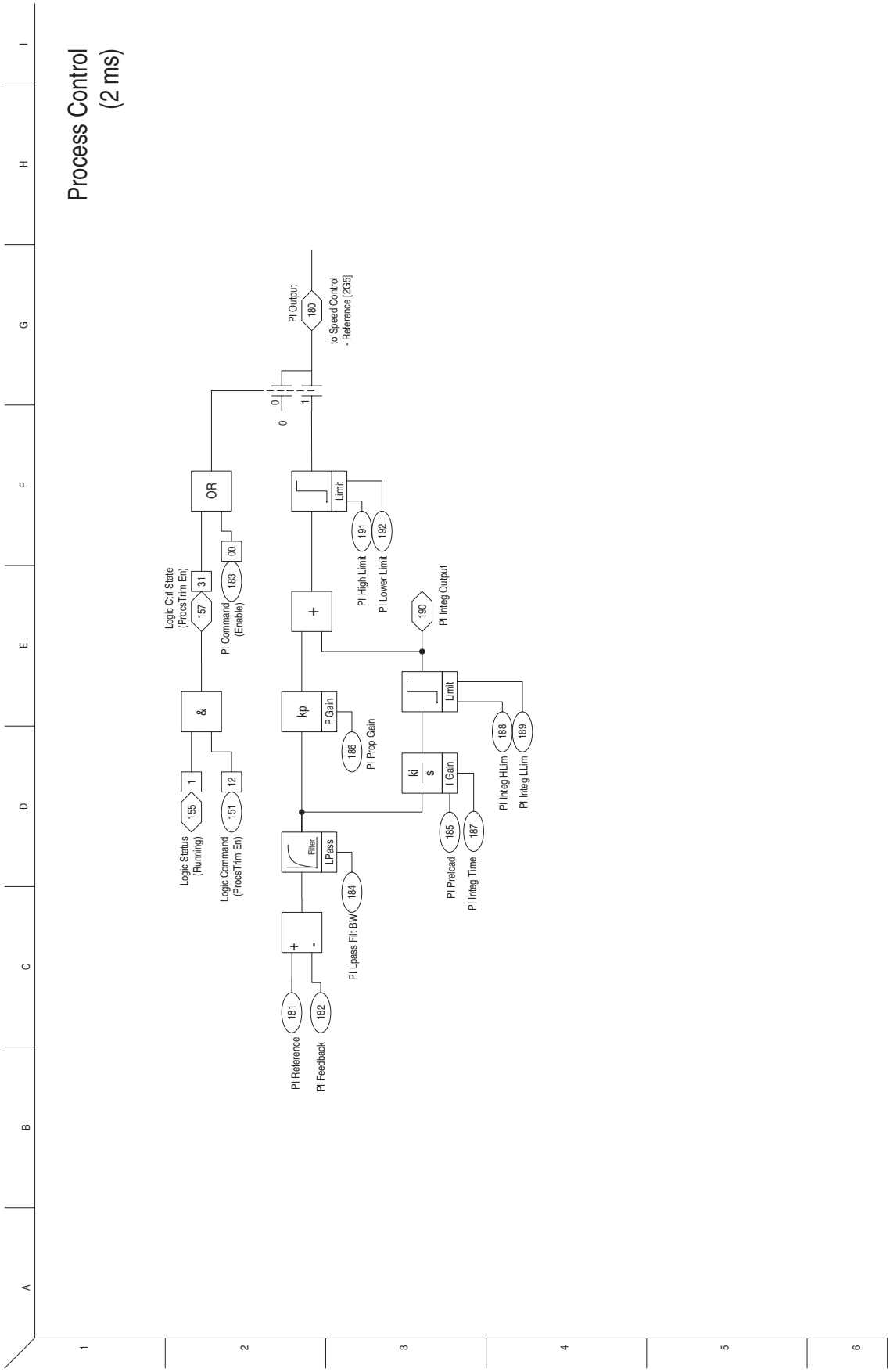
Process Control
(2 ms)
Logic Status
(Running)
155
1
Logic Command
(ProcsTrim En)
151
12
&
Logic Ctrl State
(ProcsTrim En)
157
31
PI Command
(Enable)
183
00
OR
PI Reference
181
PI Feedback
182
+
-
Filter
LPass
PI Lpass Filt BW
184
kp
P Gain
186
PI Prop Gain
+
PI High Limit
191
PI Lower Limit
192
Limit
0
0
1
PI Output
180
to Speed Control
- Reference [2G5]
ki
s
I Gain
185
PI Preload
187
PI Integ Time
Limit
190
PI Integ Output
188
PI Integ HLim
189
PI Integ LLim

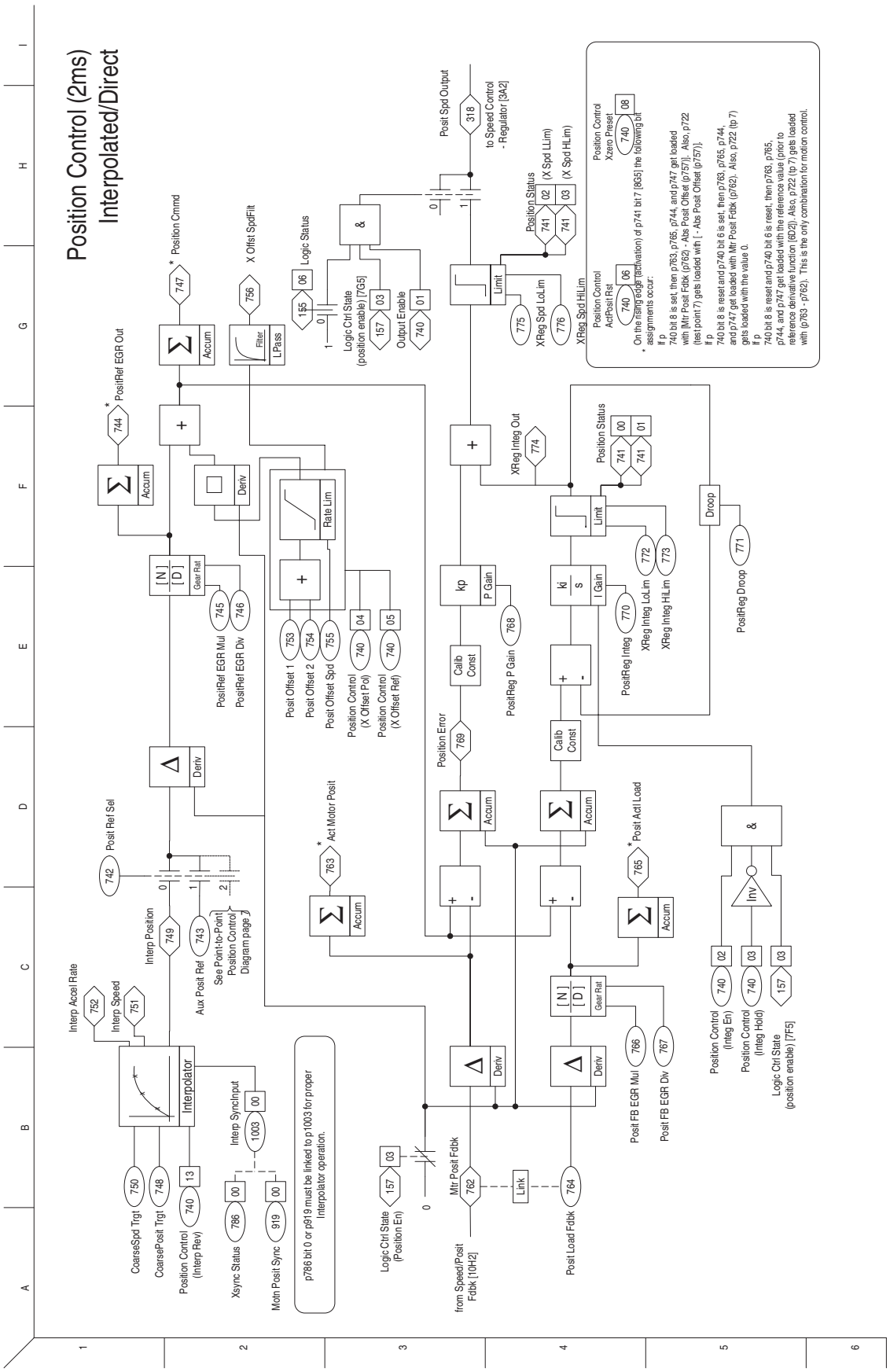
Position Control (2ms)
Interpolated/Direct
Interp Accel Rate
752
Interp Speed
751
Interpolator
Interp Position
749
Aux Posit Ref
743
See Point-to-Point Position Control Diagram page 3
Posit Ref Sel
742
Interp SyncInput
1003
00
CoarseSpd Trgt
750
CoarsePosit Trgt
748
Position Control (Interp Rev)
740
13
Xsync Status
786
00
Motn Posit Sync
919
00
p786 bit 0 or p919 must be linked to p1003 for proper Interpolator operation.
Logic Ctrl State (Position En)
157
03
Mtr Posit Fdbk
762
Link
from Speed/Posit Fdbk [10H2]
Posit Load Fdbk
784
Posit FB EGR Mul
766
Posit FB EGR Div
767
Gear Rat
Deriv
Posit Act Load
765
Accum
Inv
&
Position Control (Integ En)
Position Control (Integ Hold)
Logic Ctrl State (position enable) [7F5]
Act Motor Posit
763
Position Error
769
Calib Const
kp
P Gain
PositReg P Gain
768
ki
s
I Gain
PositReg Integ
770
XReg Integ LoLim
772
XReg Integ HiLim
773
Limit
Droop
PositReg Droop
771
XReg Integ Out
774
Position Status
741
00
01
PositRef EGR Out
744
Position Cmmd
747
PositRef EGR Mul
745
PositRef EGR Div
746
Posit Offset 1
753
Posit Offset 2
754
Posit Offset Spd
755
Position Control (X Offset Pol)
740
04
Position Control (X Offset Ref)
740
05
Rate Lim
X Offst SpdFilt
756
Filter
LPass
Logic Status
06
Logic Ctrl State (position enable) [7G5]
157
03
Output Enable
740
01
Posit Spd Output
318
to Speed Control - Regulator [3A2]
Position Status
741
02
(X Spd LLim)
03
(X Spd HLim)
XReg Spd LoLim
775
XReg Spd HiLim
776
Position Control ActPosit Rst
740
06
Position Control Xzero Preset
740
08
* On the rising edge (activation) of p741 bit 7 [8G5] the following bit assignments occur:
If p
740 bit 8 is set, then p763, p765, p744, and p747 get loaded with [Mtr Posit Fdbk (p762) - Abs Posit Offset (p757)]. Also, p722 (test point 7) gets loaded with [- Abs Posit Offset (p757)].
If p
740 bit 8 is reset and p740 bit 6 is set, then p763, p765, p744, and p747 get loaded with Mtr Posit Fdbk (p762). Also, p722 (tp 7) gets loaded with the value 0.
If p
740 bit 8 is reset and p740 bit 6 is reset, then p763, p765, p744, and p747 get loaded with the reference value (prior to reference derivative function [6D2]). Also, p722 (tp 7) gets loaded with (p763 - p762). This is the only combination for motion control.

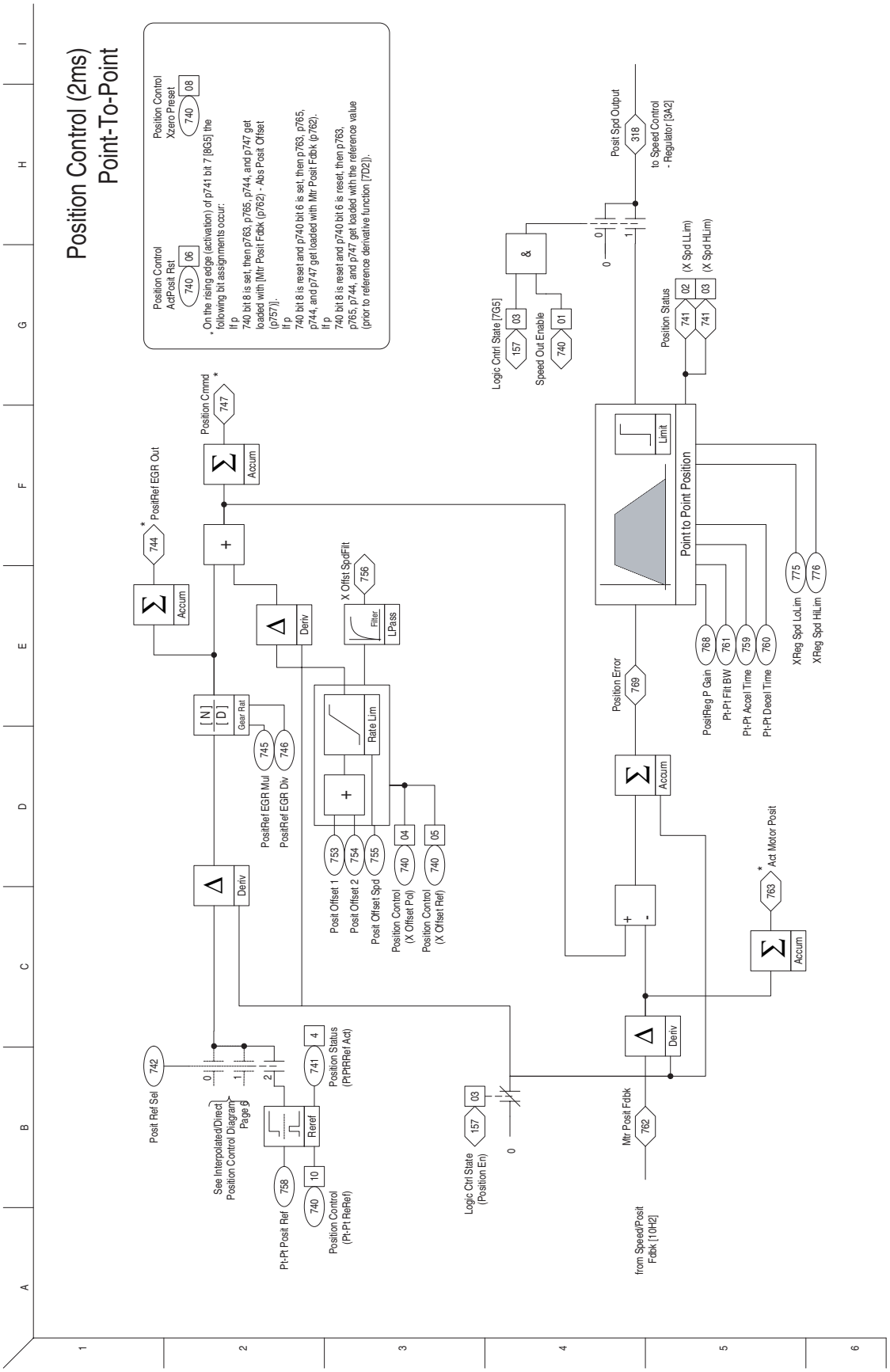
Position Control (2ms)
Point-To-Point
Position Control
AdtPosit Rst
740
06
Position Control
Xzero Preset
740
08
* On the rising edge (activation) of p741 bit 7 [9G5] the following bit assignments occur:
If p
740 bit 8 is set, then p763, p765, p744, and p747 get loaded with [Mtr Posit Fdbk (p762) - Abs Posit Offset (p757)].
If p
740 bit 8 is reset and p740 bit 6 is set, then p763, p765, p744, and p747 get loaded with Mtr Posit Fdbk (p762).
If p
740 bit 8 is reset and p740 bit 6 is reset, then p763, p765, p744, and p747 get loaded with the reference value (prior to reference derivative function [7D2]).
Posit Spd Output
318
to Speed Control
- Regulator [3A2]
Logic Cntrl State [7G5]
157
03
Speed Out Enable
740
01
&
Position Status
741
02
741
03
(X Spd LLim)
(X Spd HLim)
Position Cmmd
747
*
Accum
PositRef EGR Out
744
*
Accum
Limit
Point to Point Position
X Offst SpdFlt
756
Filter
LPass
Deriv
[N]
[D]
Gear Rat
745
746
PositRef EGR Mul
PositRef EGR Div
Rate Lim
753
754
755
Posit Offset 1
Posit Offset 2
Posit Offset Spd
04
05
740
740
Position Control
(X Offset Pol)
Position Control
(X Offset Ref)
Deriv
Position Error
769
Accum
768
761
759
760
PositReg P Gain
Pt-Pt Filt BW
Pt-Pt Accel Time
Pt-Pt Decel Time
775
776
XReg Spd LoLim
XReg Spd HiLim
Act Motor Posit
763
*
Accum
Posit Ref Sel
742
See Interpolated/Direct
Position Control Diagram
Page 6
Reref
741
4
Position Status
(PtPtRef Act)
758
Pt-Pt Posit Ref
740
10
Position Control
(Pt-Pt ReRef)
Logic Ctrl State
(Position En)
157
03
Deriv
Mtr Posit Fdbk
762
from Speed/Posit
Fdbk [10H2]

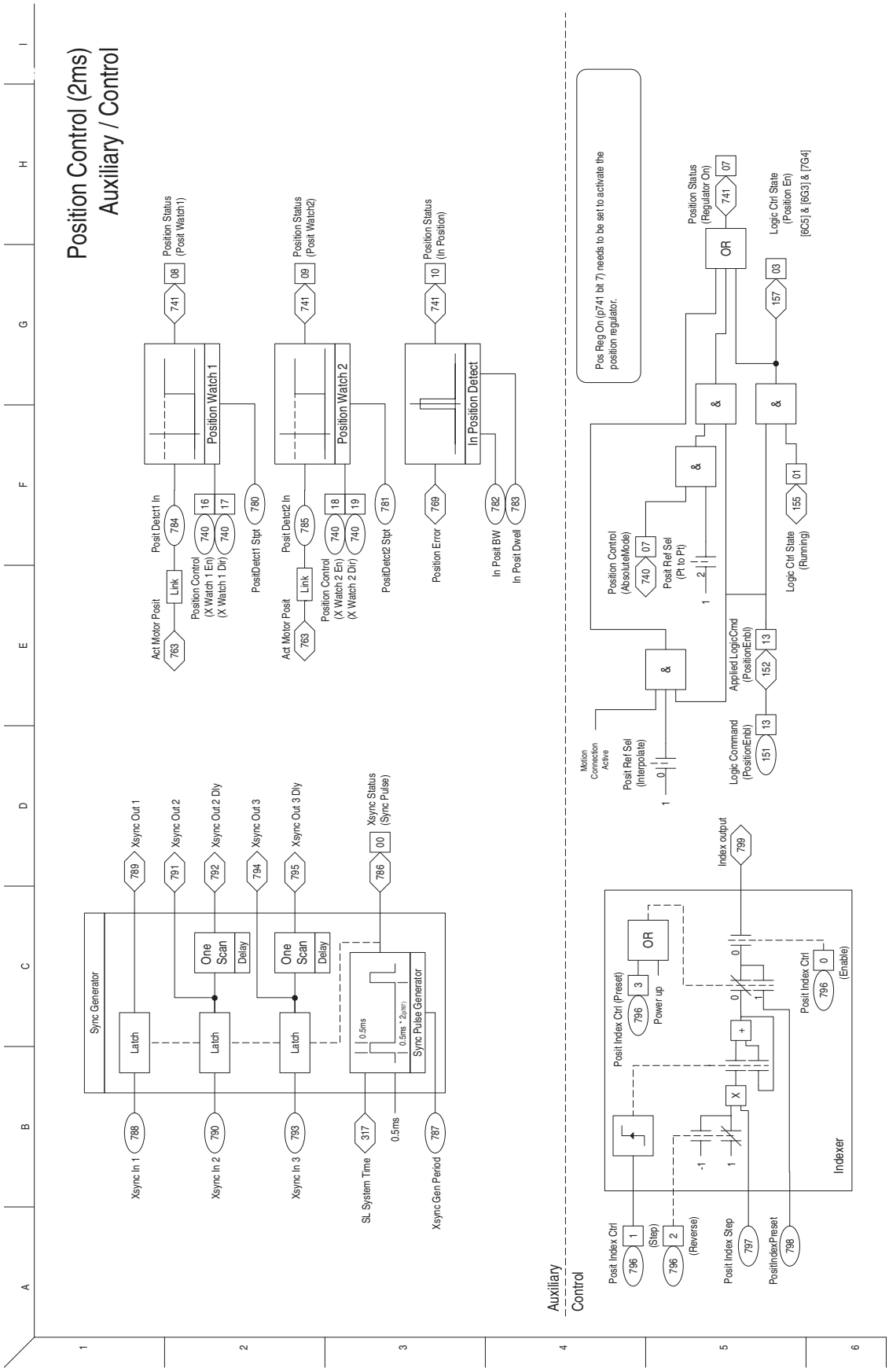
Position Control (2ms)
Auxiliary / Control
Position Status (Posit Watch1)
Position Watch 1
Position Status (Posit Watch2)
Position Watch 2
Position Status (In Position)
In Position Detect
Posit Detct1 In
Act Motor Posit
Link
Position Control (X Watch 1 En)
(X Watch 1 Dir)
PositDetct1 Stpt
Posit Detct2 In
Position Control (X Watch 2 En)
(X Watch 2 Dir)
PositDetct2 Stpt
Position Error
In Posit BW
In Posit Dwell
Pos Reg On (p741 bit 7) needs to be set to activate the position regulator.
Position Status (Regulator On)
OR
Logic Ctrl State (Position En)
[6C5] & [6G3] & [7G4]
Position Control (AbsoluteMode)
Posit Ref Sel (Pt to Pt)
Logic Ctrl State (Running)
Applied LogicCmd (PositionEnbl)
Motion Connection Active
Posit Ref Sel (Interpolate)
Logic Command (PositionEnbl)
Sync Generator
Xsync In 1
Xsync In 2
Xsync In 3
SL System Time
Xsync Gen Period
Latch
One Scan
Delay
Sync Pulse Generator
Xsync Out 1
Xsync Out 2
Xsync Out 2 Dly
Xsync Out 3
Xsync Out 3 Dly
Xsync Status (Sync Pulse)
Index output
Posit Index Ctrl (Preset)
Power up
Posit Index Ctrl
(Step)
(Reverse)
Posit Index Step
PositIndexPreset
(Enable)
Indexer
Auxiliary
Control

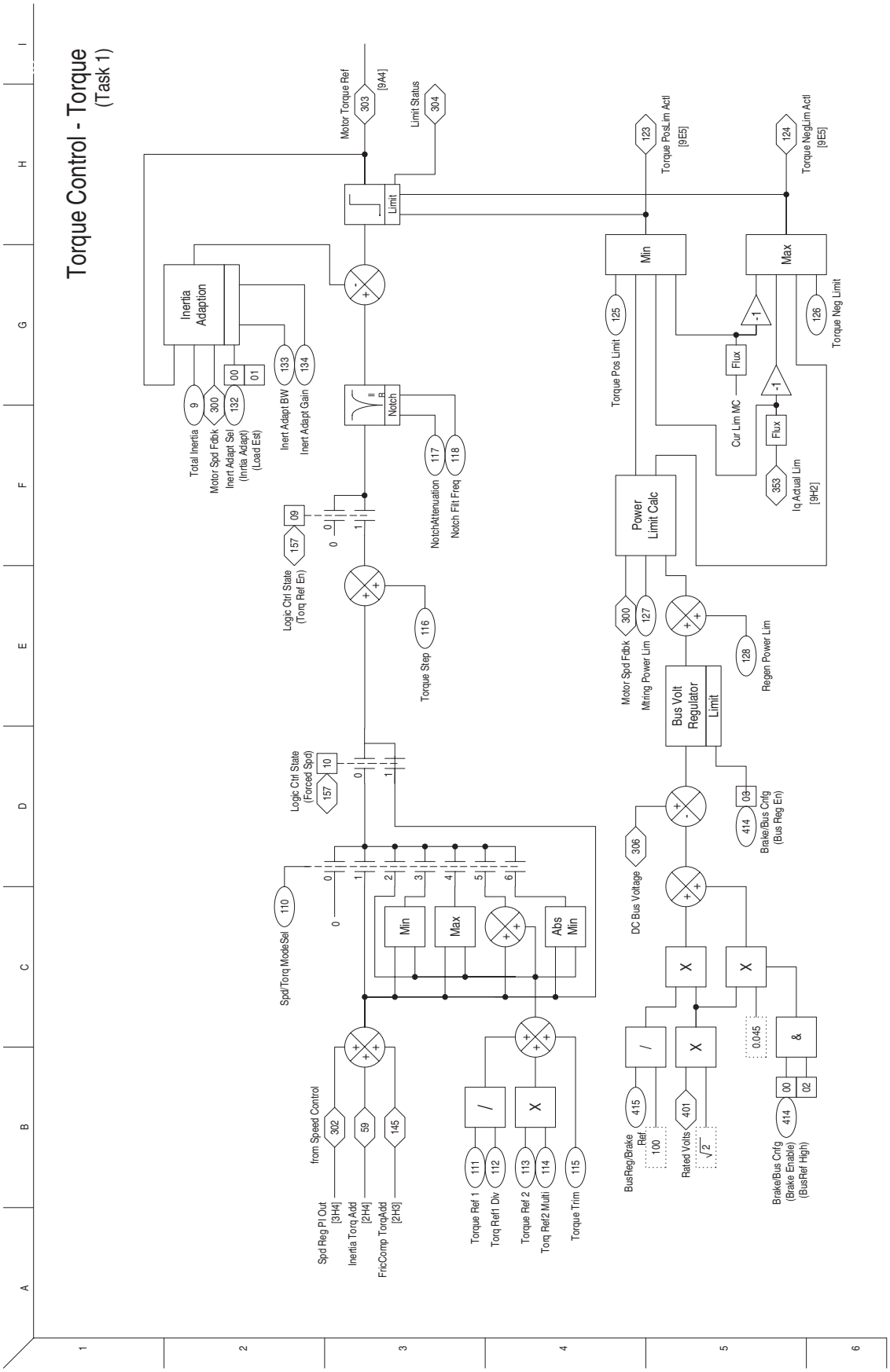
Torque Control - Torque
(Task 1)
Motor Torque Ref
303
[9A4]
Limit Status
304
Limit
Torque PosLim Actl
[9E5]
123
Torque NegLim Actl
[9E5]
124
Inertia Adaption
Min
Max
Torque Pos Limit
125
Torque Neg Limit
126
-1
Flux
Cur Lim MC
Iq Actual Lim
[9H2]
353
Total Inertia
9
Motor Spd Fdbk
300
Inert Adapt Sel
(Inrtia Adapt)
(Load Est)
132
00
01
Inert Adapt BW
133
Inert Adapt Gain
134
Notch
NotchAttenuation
117
Notch Filt Freq
118
Power
Limit Calc
Logic Ctrl State
(Torq Ref En)
157
09
Torque Step
116
Motor Spd Fdbk
300
Mtring Power Lim
127
Regen Power Lim
128
Bus Volt
Regulator
Limit
Logic Ctrl State
(Forced Spd)
157
10
Brake/Bus Cnfg
(Bus Reg En)
414
08
DC Bus Voltage
306
Spd/Torq ModeSel
110
Min
Max
Abs
Min
X
/
0.045
&
from Speed Control
Spd Reg PI Out
[3H4]
302
Inertia Torq Add
[2H4]
59
FricComp TorqAdd
[2H3]
145
Torque Ref 1
111
Torq Ref1 Div
112
Torque Ref 2
113
Torq Ref2 Multi
114
Torque Trim
115
BusReg/Brake
Ref.
415
100
Rated Volts
401
√2
Brake/Bus Cnfg
(Brake Enable)
(BusRef High)
414
00
02

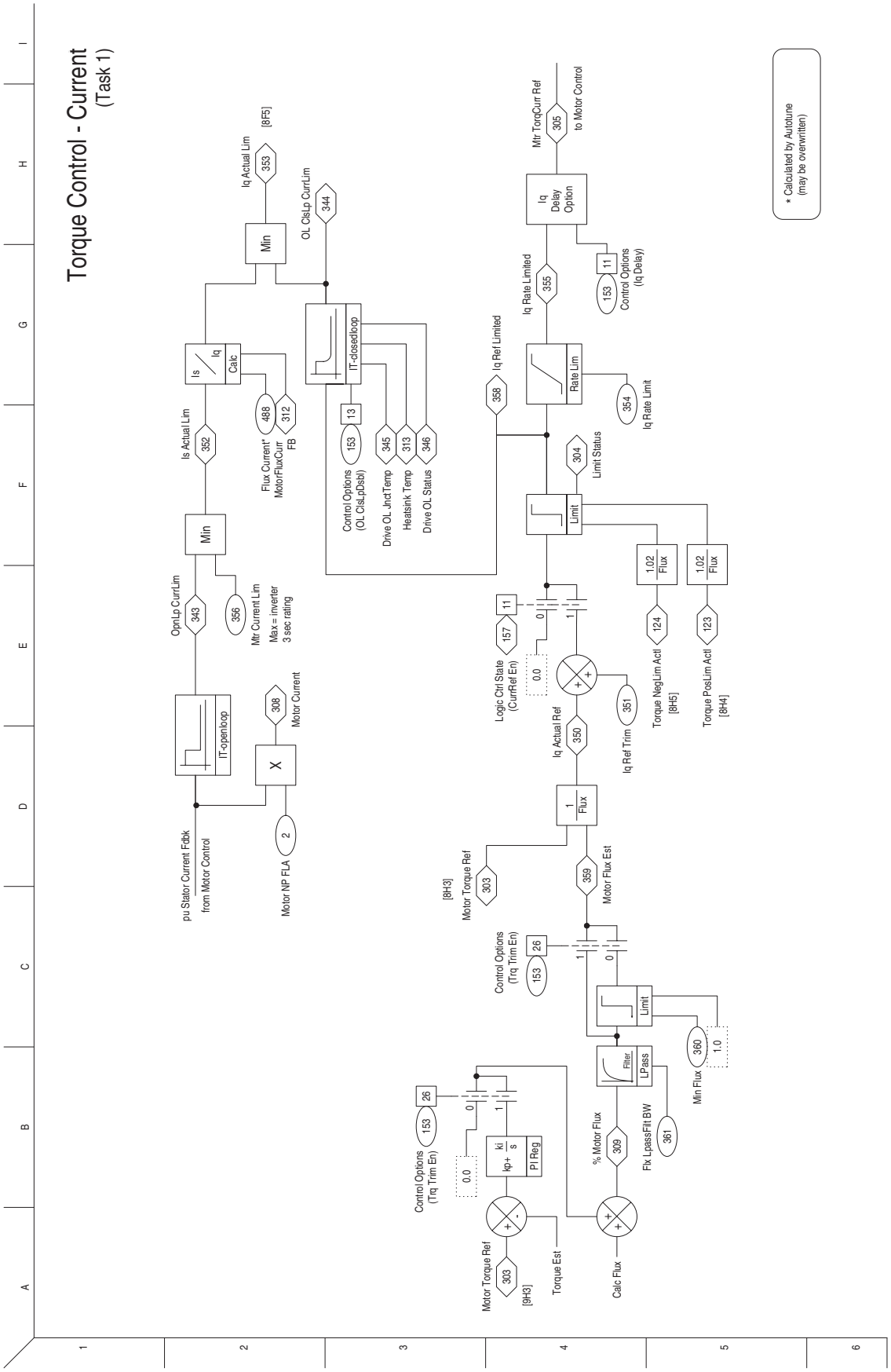
Torque Control - Current
(Task 1)
pu Stator Current Fdbk
from Motor Control
IT-openloop
OpnLp CurrLim
343
Min
356
Mtr Current Lim
Max = inverter
3 sec rating
Is Actual Lim
352
Is
Iq
Calc
Motor NP FLA
2
X
308
Motor Current
Flux Current*
Motor/FluxCurr
FB
488
312
Iq Actual Lim
353
[8F5]
Min
OL ClsLp CurrLim
344
IT-closedloop
Control Options
(OL ClsLpDsbl)
153
13
Drive OL_JnctTemp
Heatsink Temp
Drive OL Status
345
313
346
Iq Ref Limited
358
Iq Rate Limited
355
Iq
Delay
Option
Control Options
(Iq Delay)
153
11
Mtr TorqCurr Ref
305
to Motor Control
Rate Lim
Iq Rate Limit
354
Limit Status
304
Limit
1.02
Flux
124
Torque NegLim Actl
[8H5]
1.02
Flux
123
Torque PosLim Actl
[8H4]
Logic Ctrl State
(CurrRef En)
157
11
0.0
Iq Actual Ref
350
Iq Ref Trim
351
1
Flux
[8H3]
Motor Torque Ref
303
Motor Flux Est
359
Control Options
(Trq Trim En)
153
26
Limit
Filter
LPass
Min Flux
360
1.0
Fltr LpassFilt BW
361
% Motor Flux
309
Control Options
(Trq Trim En)
153
26
0.0
ki
kp+
s
PI Reg
Motor Torque Ref
303
[9H3]
Torque Est
Calc Flux
* Calculated by Autotune
(may be overwritten)

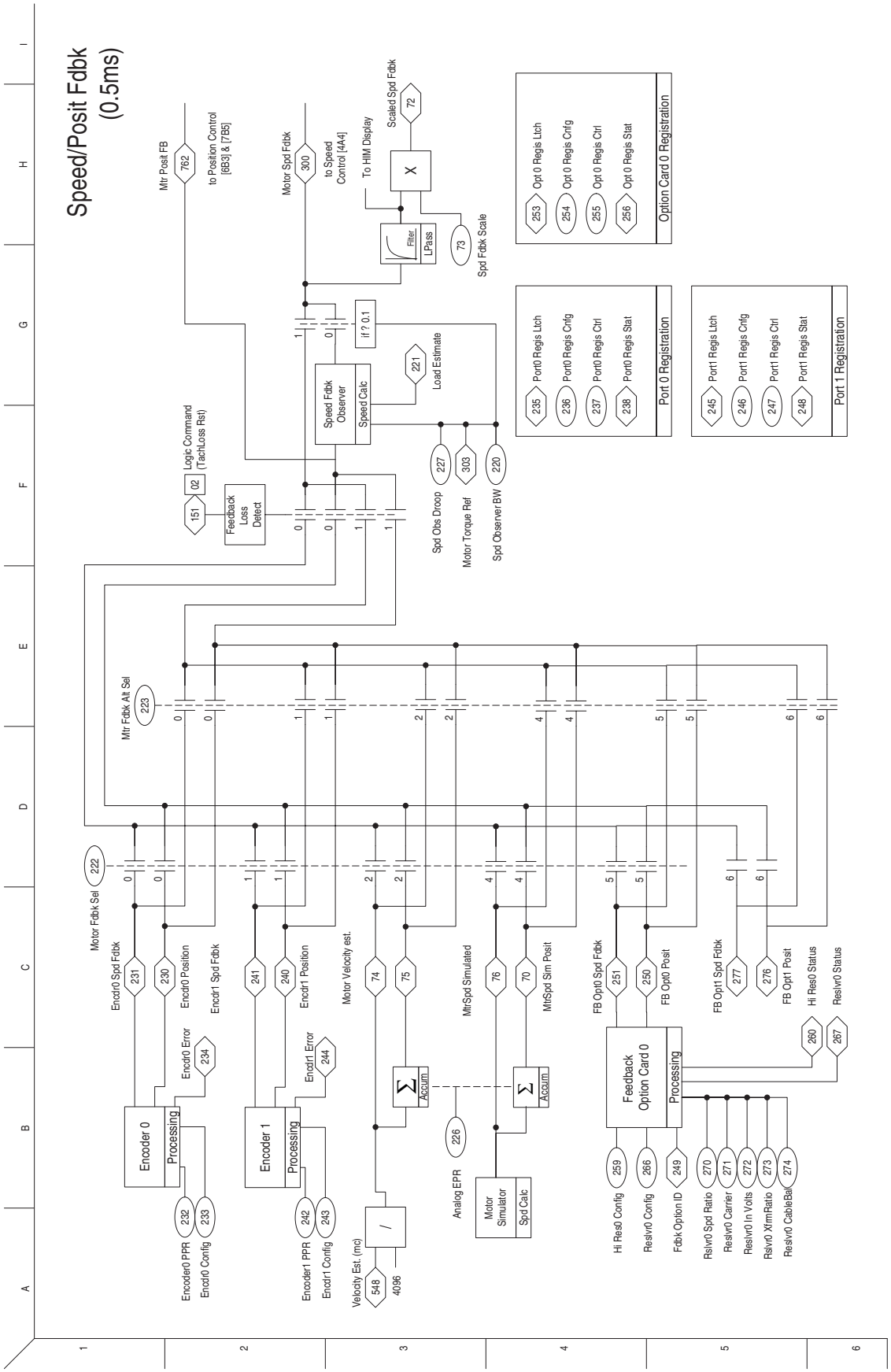
Speed/Posit Fdbk
(0.5ms)
Mtr Posit FB
762
to Position Control
[6B3] & [7B5]
Motor Spd Fdbk
300
to Speed
Control [4A4]
To HIM Display
Scaled Spd Fdbk
72
X
Filter
LPass
73
Spd Fdbk Scale
Opt 0 Regis Ltch
253
Opt 0 Regis Cnfg
254
Opt 0 Regis Ctrl
255
Opt 0 Regis Stat
256
Option Card 0 Registration
Port0 Regis Ltch
235
Port0 Regis Cnfg
236
Port0 Regis Ctrl
237
Port0 Regis Stat
238
Port 0 Registration
Port1 Regis Ltch
245
Port1 Regis Cnfg
246
Port1 Regis Ctrl
247
Port1 Regis Stat
248
Port 1 Registration
Logic Command
(TachLoss Rst)
151
02
Feedback
Loss
Detect
Speed Fdbk
Observer
Speed Calc
I f ? 0.1
221
Load Estimate
227
Spd Obs Droop
303
Motor Torque Ref
220
Spd Observer BW
Mtr Fdbk Alt Sel
223
Motor Fdbk Sel
222
Encdr0 Spd Fdbk
231
Encdr0 Position
230
Encdr1 Spd Fdbk
241
Encdr1 Position
240
Motor Velocity est.
74
75
MtrSpd Simulated
76
MtrSpd Sim Posit
70
FB Opt0 Spd Fdbk
251
FB Opt0 Posit
250
FB Opt1 Spd Fdbk
277
FB Opt1 Posit
276
Hi Res0 Status
260
Reslvr0 Status
267
Encdr0 Error
234
Encdr1 Error
244
Encoder 0
Processing
Encoder 1
Processing
Accum
Accum
226
Analog EPR
Motor
Simulator
Spd Calc
Feedback
Option Card 0
Processing
232
Encoder0 PPR
233
Encdr0 Config
242
Encoder1 PPR
243
Encdr1 Config
/
548
4096
Velocity Est. (mc)
259
Hi Res0 Config
266
Reslvr0 Config
249
Fdbk Option ID
270
Rslvr0 Spd Ratio
271
Reslvr0 Carrier
272
Reslvr0 In Volts
273
Rslvr0 XfmRatio
274
Reslvr0 CableBal

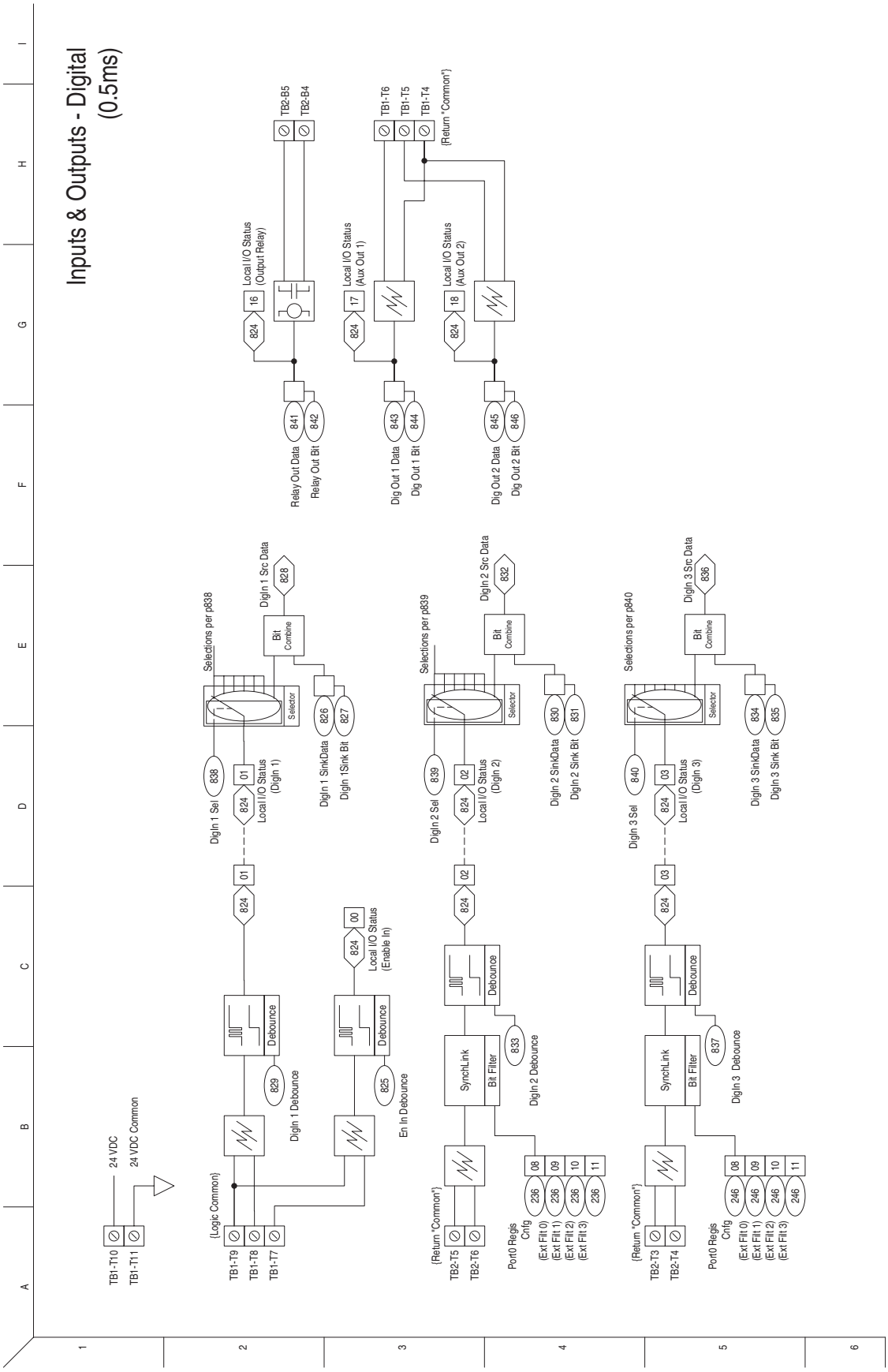
Inputs & Outputs - Digital
(0.5ms)
Local I/O Status
(Output Relay)
16
824
TB2-B5
TB2-B4
Relay Out Data
Relay Out Bit
841
842
Local I/O Status
(Aux Out 1)
17
824
TB1-T6
TB1-T5
TB1-T4
{Return "Common"}
Dig Out 1 Data
Dig Out 1 Bit
843
844
Local I/O Status
(Aux Out 2)
18
824
Dig Out 2 Data
Dig Out 2 Bit
845
846
Selections per p838
DigIn 1 Sel
838
824
01
Local I/O Status
(DigIn 1)
Selector
Bit
Combine
DigIn 1 Src Data
828
DigIn 1 SinkData
826
DigIn 1Sink Bit
827
Debounce
DigIn 1 Debounce
829
Local I/O Status
(Enable In)
00
En In Debounce
825
Selections per p839
DigIn 2 Sel
839
DigIn 2 Src Data
832
DigIn 2 SinkData
830
DigIn 2 Sink Bit
831
02
SynchLink
Bit Filter
DigIn 2 Debounce
833
Port0 Regis
Cntg
(Ext Filt 0)
(Ext Filt 1)
(Ext Filt 2)
(Ext Filt 3)
236
08
09
10
11
Selections per p840
DigIn 3 Sel
840
DigIn 3 Src Data
836
DigIn 3 SinkData
834
DigIn 3 Sink Bit
835
03
DigIn 3 Debounce
837
246
24 VDC
24 VDC Common
TB1-T10
TB1-T11
{Logic Common}
TB1-T9
TB1-T8
TB1-T7
TB2-T5
TB2-T6
TB2-T3
TB2-T4

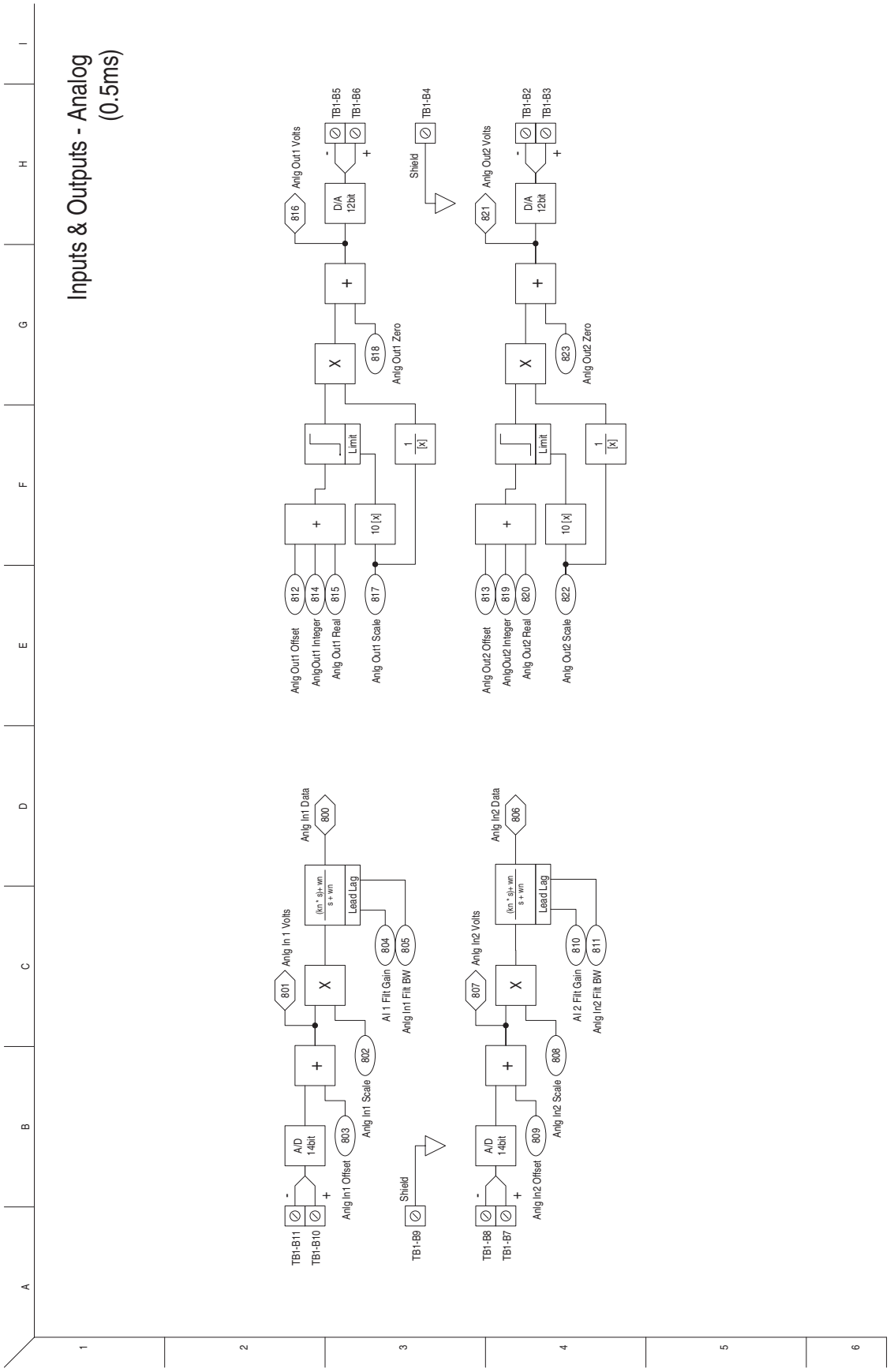
Inputs & Outputs - Analog
(0.5ms)
TB1-B11
TB1-B10
A/D
14bit
Anlg In1 Offset
803
Anlg In1 Scale
802
801
Anlg In 1 Volts
Lead Lag
A1 1 Filt Gain
804
Anlg In1 Filt BW
805
800
Anlg In1 Data
Shield
TB1-B9
TB1-B8
TB1-B7
A/D
14bit
Anlg In2 Offset
809
Anlg In2 Scale
808
807
Anlg In2 Volts
Lead Lag
A1 2 Filt Gain
810
Anlg In2 Filt BW
811
806
Anlg In2 Data
Anlg Out1 Offset
812
AnlgOut1 Integer
814
Anlg Out1 Real
815
Anlg Out1 Scale
817
10 [x]
Limit
Anlg Out1 Zero
818
D/A
12bit
816
Anlg Out1 Volts
TB1-B5
TB1-B6
Shield
TB1-B4
Anlg Out2 Offset
813
AnlgOut2 Integer
819
Anlg Out2 Real
820
Anlg Out2 Scale
822
10 [x]
Limit
Anlg Out2 Zero
823
D/A
12bit
821
Anlg Out2 Volts
TB1-B2
TB1-B3

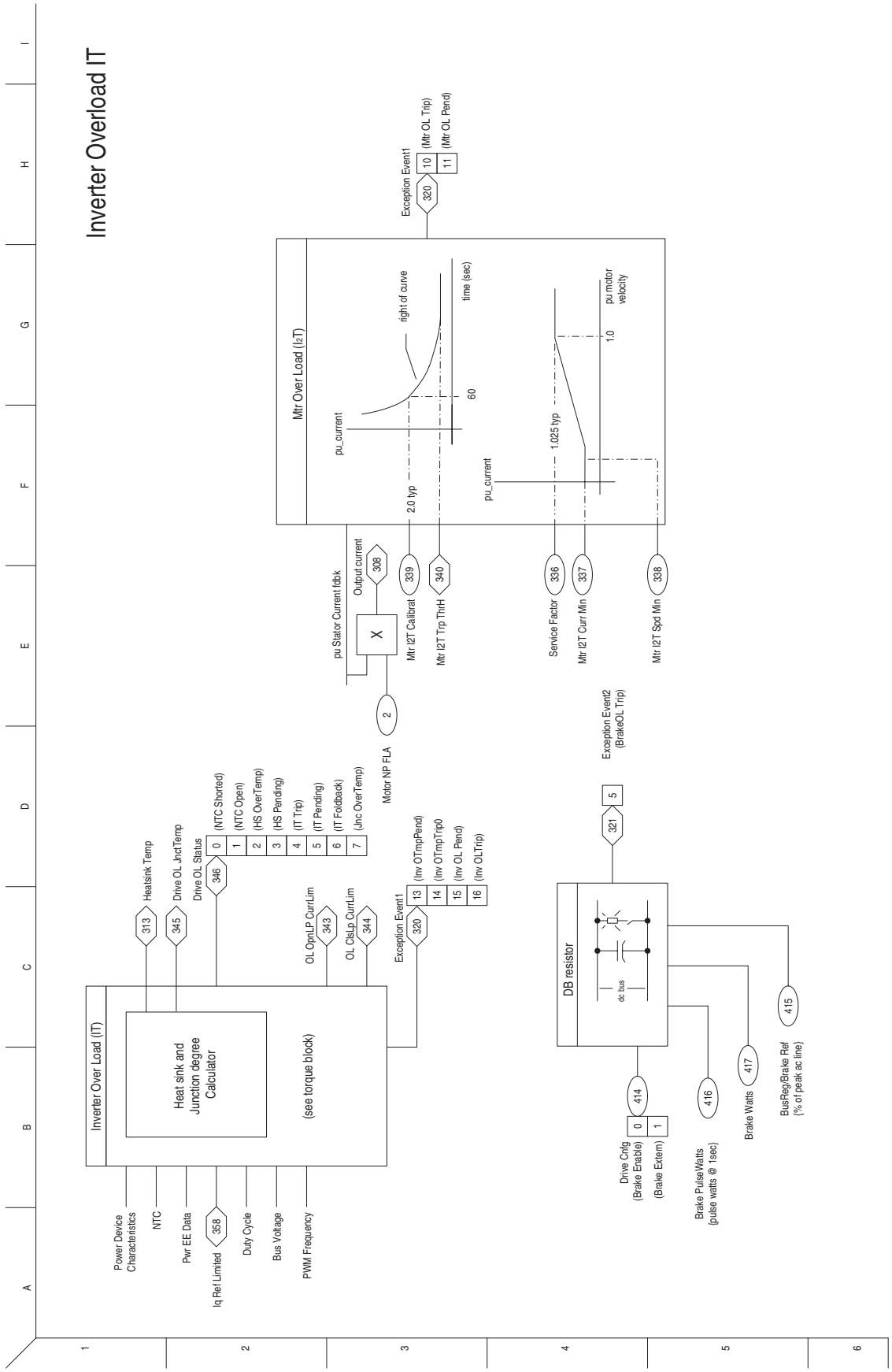
Inverter Overload IT
Mtr Over Load (I2T)
pu_current
right of curve
time (sec)
60
2.0 typ
pu_current
1.025 typ
1.0
pu motor velocity
Exception Event1
320
10 (Mtr OL Trip)
11 (Mtr OL Pend)
pu Stator Current fdbk
Output current
308
X
2
Motor NP FLA
339
Mtr I2T Calibrat
340
Mtr I2T Trip ThrH
336
Service Factor
337
Mtr I2T Curr Min
338
Mtr I2T Spd Min
Exception Event2
(BrakeOL Trip)
321
5
DB resistor
dc bus
414
Drive Cnfg
0 (Brake Enable)
1 (Brake Extern)
416
Brake Pulse Watts
(pulse watts @ 1sec)
417
Brake Watts
415
BusReg/Brake Ref
(% of peak ac line)
Inverter Over Load (IT)
Heat sink and
Junction degree
Calculator
(see torque block)
313
Heatsink Temp
345
Drive OL JnctTemp
346
Drive OL Status
0 (NTC Shorted)
1 (NTC Open)
2 (HS OverTemp)
3 (HS Pending)
4 (IT Trip)
5 (IT Pending)
6 (IT Foldback)
7 (Jnc OverTemp)
343
OL OpnLP CurrLim
344
OL ClsLp CurrLim
320
Exception Event1
13 (Inv OTmpPend)
14 (Inv OTmpTrip0)
15 (Inv OL Pend)
16 (Inv OLTrip)
Power Device
Characteristics
NTC
Pwr EE Data
358
Iq Ref Limited
Duty Cycle
Bus Voltage
PWM Frequency

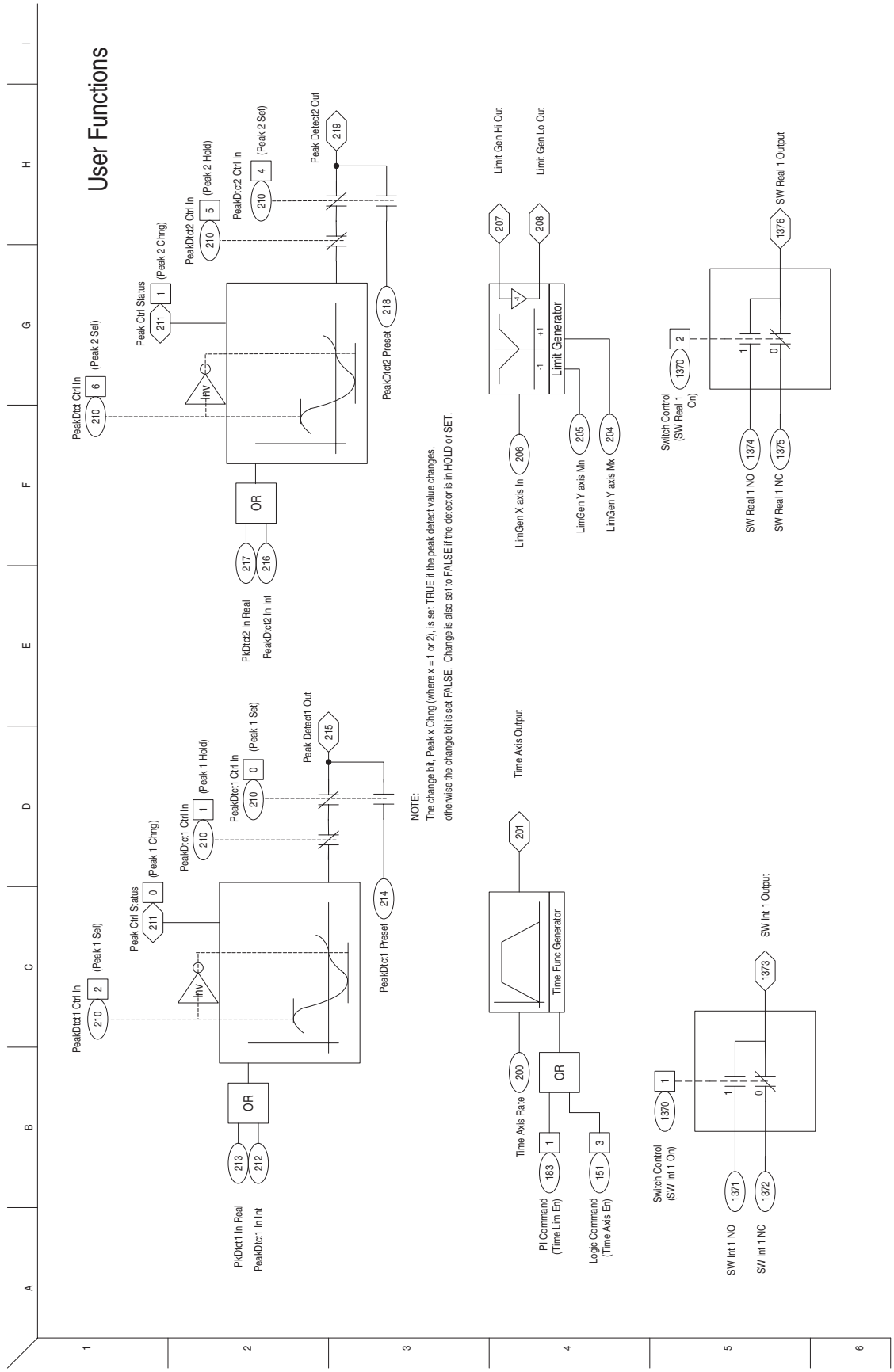
User Functions
PeakDtct Ctrl In
210
6
(Peak 2 Sel)
Peak Ctrl Status
211
1
(Peak 2 Chng)
PeakDtct2 Ctrl In
210
5
(Peak 2 Hold)
PeakDtct2 Ctrl In
210
4
(Peak 2 Set)
Peak Detect2 Out
219
INV
OR
217
216
PkDtct2 In Real
PeakDtct2 In Int
PeakDtct2 Preset
218
PeakDtct1 Ctrl In
210
2
(Peak 1 Sel)
Peak Ctrl Status
211
0
(Peak 1 Chng)
PeakDtct1 Ctrl In
210
1
(Peak 1 Hold)
PeakDtct1 Ctrl In
210
0
(Peak 1 Set)
Peak Detect1 Out
215
INV
OR
213
212
PkDtct1 In Real
PeakDtct1 In Int
PeakDtct1 Preset
214
NOTE:
The change bit, Peak x Chng (where x = 1 or 2), is set TRUE if the peak detect value changes,
otherwise the change bit is set FALSE. Change is also set to FALSE if the detector is in HOLD or SET.
Limit Gen Hi Out
Limit Gen Lo Out
207
208
-1
+1
Limit Generator
LimGen X axis In
206
LimGen Y axis Mn
205
LimGen Y axis Mx
204
Switch Control
(SW Real 1
On)
1370
2
1
0
SW Real 1 NO
1374
SW Real 1 NC
1375
SW Real 1 Output
1376
Time Axis Output
201
Time Func Generator
Time Axis Rate
200
OR
PI Command
(Time Lim En)
183
1
Logic Command
(Time Axis En)
151
3
Switch Control
(SW Int 1 On)
1370
1
1
0
SW Int 1 NO
1371
SW Int 1 NC
1372
SW Int 1 Output
1373

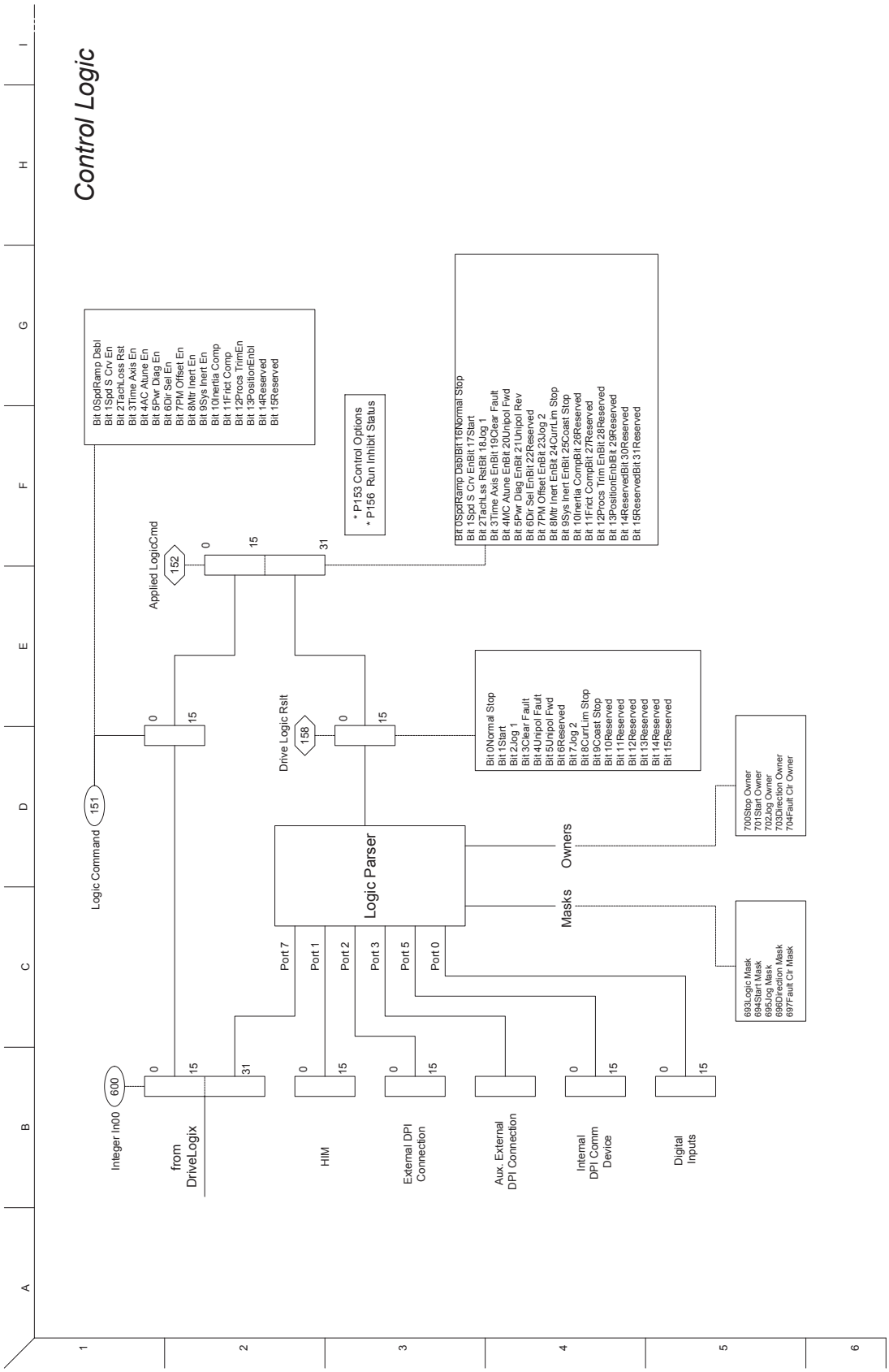
Control Logic
Integer In00
600
from DriveLogix
HIM
External DPI Connection
Aux. External DPI Connection
Internal DPI Comm Device
Digital Inputs
Port 7
Port 1
Port 2
Port 3
Port 5
Port 0
Logic Parser
Masks
Owners
693Logic Mask
694Start Mask
695Jog Mask
696Direction Mask
697Fault Clr Mask
700Stop Owner
701Start Owner
702Jog Owner
703Direction Owner
704Fault Clr Owner
Logic Command
151
Drive Logic Rslt
158
Applied LogicCmd
152
Bit 0Normal Stop
Bit 1Start
Bit 2Jog 1
Bit 3Clear Fault
Bit 4Unipol Fault
Bit 5Unipol Fwd
Bit 6Reserved
Bit 7Jog 2
Bit 8CurrLim Stop
Bit 9Coast Stop
Bit 10Reserved
Bit 11Reserved
Bit 12Reserved
Bit 13Reserved
Bit 14Reserved
Bit 15Reserved
Bit 0SpdRamp Dsbl
Bit 1Spd S Crv En
Bit 2TachLoss Rst
Bit 3Time Axis En
Bit 4AC Atune En
Bit 5Pwr Diag En
Bit 6Dir Sel En
Bit 7PM Offset En
Bit 8Mtr Inert En
Bit 9Sys Inert En
Bit 10Inertia Comp
Bit 11Frict Comp
Bit 12Procs TrimEn
Bit 13PositionEnbl
Bit 14Reserved
Bit 15Reserved
* P153 Control Options
* P156 Run Inhibit Status
Bit 0SpdRamp DsblBit 16Normal Stop
Bit 1Spd S Crv EnBit 17Start
Bit 2TachLss RstBit 18Jog 1
Bit 3Time Axis EnBit 19Clear Fault
Bit 4MC Atune EnBit 20Unipol Fwd
Bit 5Pwr Diag EnBit 21Unipol Rev
Bit 6Dir Sel EnBit 22Reserved
Bit 7PM Offset EnBit 23Jog 2
Bit 8Mtr Inert EnBit 24CurrLim Stop
Bit 9Sys Inert EnBit 25Coast Stop
Bit 10Inertia CompBit 26Reserved
Bit 11Frict CompBit 27Reserved
Bit 12Procs Trim EnBit 28Reserved
Bit 13PositionEnblBit 29Reserved
Bit 14ReservedBit 30Reserved
Bit 15ReservedBit 31Reserved

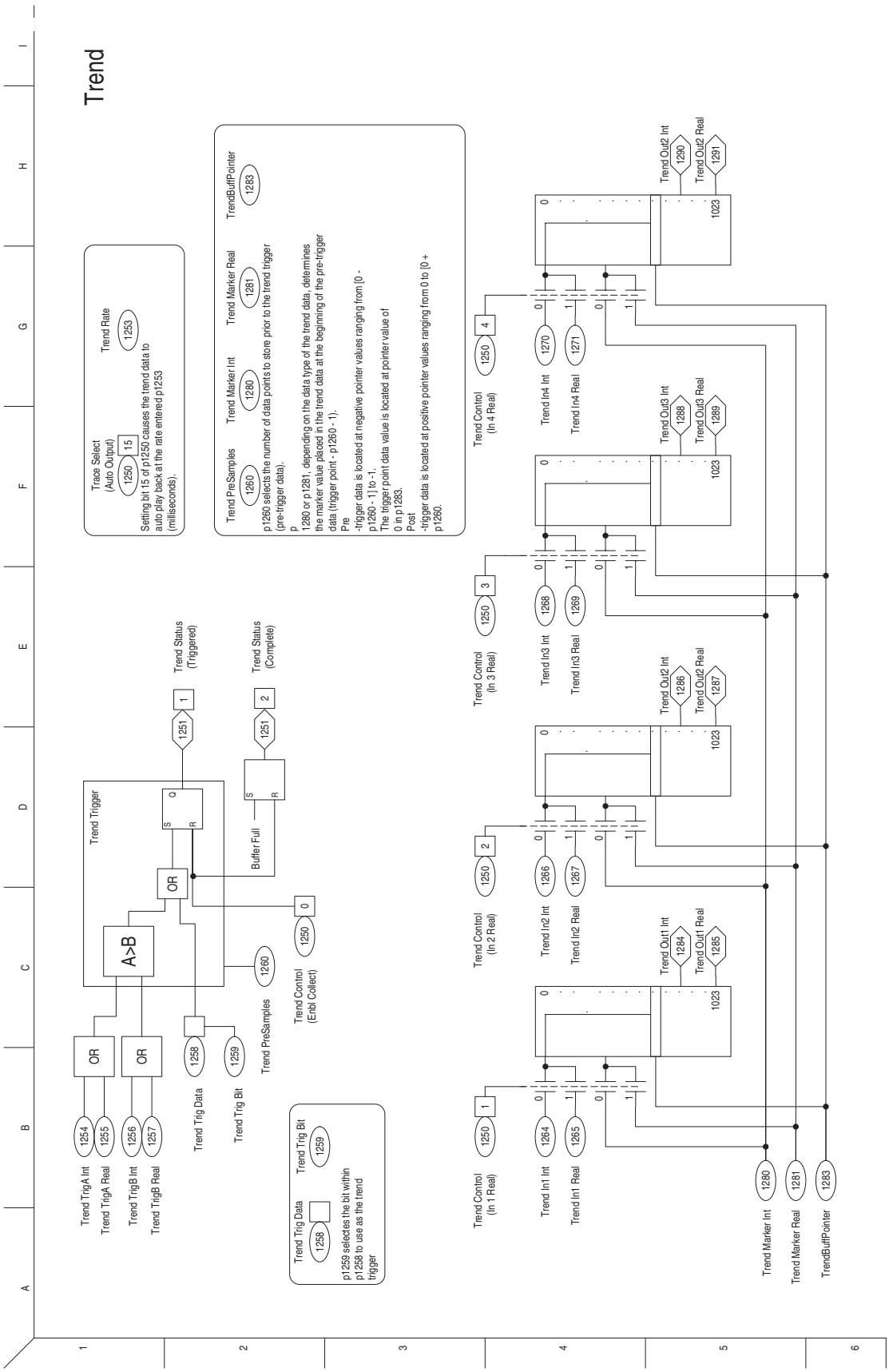
Trend
Trace Select (Auto Output)
1250
15
Trend Rate
1253
Setting bit 15 of p1250 causes the trend data to auto play back at the rate entered p1253 (milliseconds).
Trend PreSamples
1260
Trend Marker Int
1280
Trend Marker Real
1281
TrendBuffPointer
1283
p1260 selects the number of data points to store prior to the trend trigger (pre-trigger data).
p
1280 or p1281, depending on the data type of the trend data, determines the marker value placed in the trend data at the beginning of the pre-trigger data (trigger point - p1260 - 1).
Pre
-trigger data is located at negative pointer values ranging from [0 - p1260 - 1] to -1.
The trigger point data value is located at pointer value of 0 in p1283.
Post
-trigger data is located at positive pointer values ranging from 0 to [0 + p1260.
Trend Trigger
A>B
OR
OR
OR
S
Q
R
Buffer Full
Trend Status (Triggered)
1251
Trend Status (Complete)
1251
Trend Control (Enbl Collect)
1250
0
Trend PreSamples
1260
Trend Trig Data
1258
Trend Trig Bit
1259
Trend TrigA Int
1254
Trend TrigA Real
1255
Trend TrigB Int
1256
Trend TrigB Real
1257
Trend Trig Data
1258
Trend Trig Bit
1259
p1259 selectes the bit within p1258 to use as the trend trigger
Trend Control (In 1 Real)
1250
1
Trend Control (In 2 Real)
1250
2
Trend Control (In 3 Real)
1250
3
Trend Control (In 4 Real)
1250
4
Trend In1 Int
1264
Trend In1 Real
1265
Trend In2 Int
1266
Trend In2 Real
1267
Trend In3 Int
1268
Trend In3 Real
1269
Trend In4 Int
1270
Trend In4 Real
1271
Trend Out1 Int
1284
Trend Out1 Real
1285
Trend Out2 Int
1286
Trend Out2 Real
1287
Trend Out3 Int
1288
Trend Out3 Real
1289
Trend Out2 Int
1290
Trend Out2 Real
1291
1023
Trend Marker Int
1280
Trend Marker Real
1281
TrendBuffPointer
1283

Notes:

Application Notes

For additional application notes, refer to the *PowerFlex 700S Adjustable Frequency AC Drive with Phase I Control - Reference Manual*, publication PFLEX-RM002.

For Information on ...	See Page...
Input Voltage Range/Tolerance	C-1
Motor Control Mode	C-2
Motor Overload	C-3
Overspeed Limit	C-4
Stop Dwell Time	C-5
Setpt 1 Data	C-6
Setpt 2 Data	C-6

Input Voltage Range/ Tolerance

Drive Rating	Nominal Line Voltage	Nominal Motor Voltage	Drive Full Power Range	Drive Operating Range
200-240	200	200†	200-264	180-264
	208	208	208-264	
	240	230	230-264	
380-400	380	380†	380-528	342-528
	400	400	400-528	
	480	460	460-528	
500-600 *(Frames 1-4 Only)*	600	575†	575-660	432-660
500-690 *(Frames 5 & 6 Only)*	600	575†	575-660	475-759
	690	690	690-759	475-759

Drive Full Power Range =	Nominal Motor Voltage to Drive Rated Voltage + 10%. Rated current is available across the entire Drive Full Power Range
Drive Operating Range =	Lowest† Nominal Motor Voltage - 10% to Drive Rated Voltage + 10%. Drive Output is linearly derated when Actual Line Voltage is less than the Nominal Motor Voltage

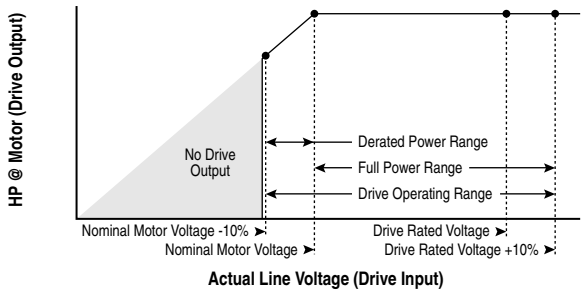

Example:

Calculate the maximum power of a 5 HP, 460V motor connected to a 480V rated drive supplied with 342V Actual Line Voltage input.

- Actual Line Voltage / Nominal Motor Voltage = 74.3%
- 74.3% × 5 HP = 3.7 HP
- 74.3% × 60 Hz = 44.6 Hz

At 342V Actual Line Voltage, the maximum power the 5 HP, 460V motor can produce is 3.7 HP at 44.6 Hz.

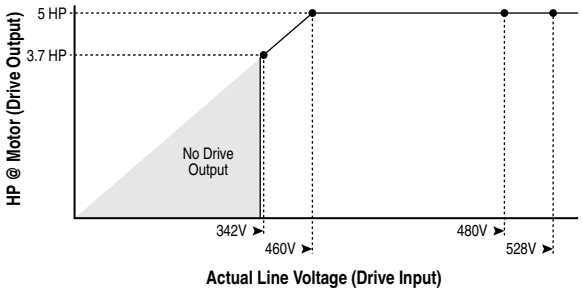

Motor Control Mode

Parameter 485 [Motor Ctrl Mode] selects the type of motor control to use. This parameter is set during the HIM assisted startup when asked to select the Motor Control. The settings for Parameter 485 [Motor Ctrl Mode] are

- 0 - "FOC" selects field oriented control. Field oriented control is used with AC squirrel cage induction motors for high performance.
- 1 - "FOC2" selects field oriented control and is only used for a specific type of AC induction motor with motor thermal feedback.
- 2 - "Pmag Motor" selects control for permanent magnet motors.
- 3 - "Reserved"
- 4 - "Test" puts the drive in a test mode to perform the direction test. "Test" is automatically selected during the direction test portion of the Start-Up routine and does not need to be set manually by the user.

Field Oriented Control, Permanent Magnet Motor Control, and Volts/Hertz Control are described in further detail below.

Field Oriented Control

Field oriented control is used with AC squirrel cage induction motors for high performance. Motor data and an autotune is required for correct operation in this mode. Field oriented control is selected by setting parameter 485 [Motor Ctrl Mode] = 0 "FOC".

In field oriented control, the drive takes the speed reference that is specified by the Speed Reference Selection Block and compares it to the speed feedback. The speed regulator uses Proportional and Integral gains to adjust the torque reference for the motor. This torque reference attempts to operate the motor at the specified speed. The torque reference is then converted to the torque producing component of the motor current.

This type of speed regulator produces a high bandwidth response to speed command and load changes. In field oriented control the flux and torque producing currents are independently controlled. Therefore, you can send a torque reference directly instead of a speed reference. The independent flux control also allows you to reduce the flux in order to run above base motor speed.

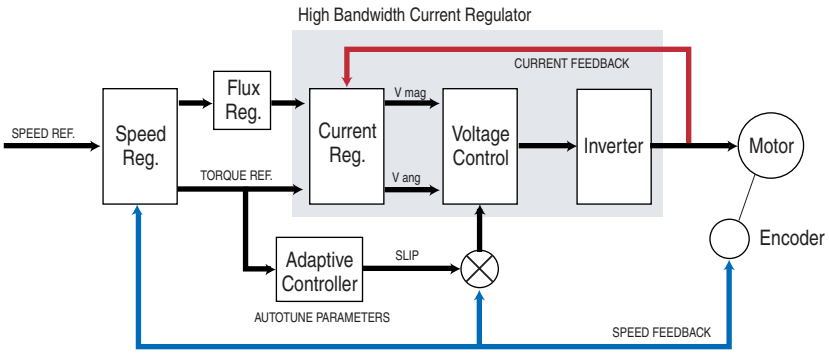

Permanent Magnet Control

Permanent magnet control is used with permanent magnet motors. Permanent magnet motor control is selected by setting parameter 485 [Motor Ctrl Mode] = 2 "Pmag Motor".

- Permanent magnet motor control requires either a hi-resolution Stegmann encoder or compatible resolver feedback on the motor. Refer to PowerFlex 700S Stegmann Hi-Resolution Encoder Feedback Option on page E-1 for a list of compatible hi-resolution Stegmann encoders and compatible resolvers.
- Motor data and an autotune is required for correct operation in this mode. Refer to PowerFlex 700S Permanent Magnet Motor Specifications on page I-1 for a list of compatible Allen-Bradley permanent magnet motors and motor data to be used with the PowerFlex 700S.

Motor Overload

Mtr I2T Spd Min

Sets the minimum speed for the motor overload (I^2T) function. The value indicates minimum speed below the minimum current threshold [Mtr I2T Curr Min], and these are the first current/speed breakpoint. From this point the current threshold is linear to the value specified by the motor service factor [Service Factor].

Figure C.1 Motor Overload Curve With Parameter 338 [Mtr I2T Spd Min] Is Less Than 1.0

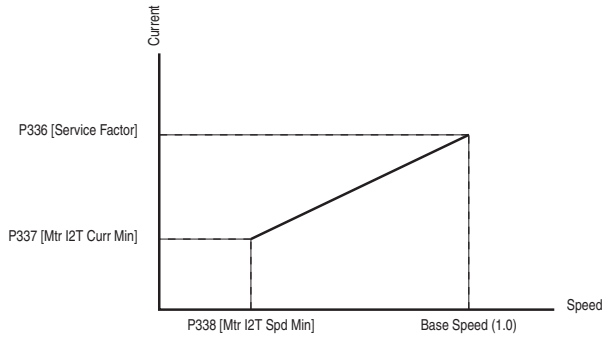

When motor current exceeds the value of the curve, Mtr OL Output integrates. A motor overload exception event occurs when the value in Mtr OL Output reaches 1.0. The value of Mtr OL Output is visible in parameter 330 [Fault TP Data] when the value of parameter 329 [Fault TP Sel] equals 13.

Figure C.2 Motor Overload Curve With Parameter 338 [Mtr I2T Spd Min] Is Equal To 1.0

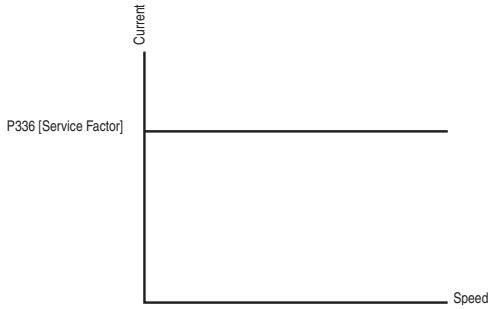

When the value of parameter 338 [Mtr I2T Spd Min] equals 1.0, the curve is flat - at the value of rated motor current times the value of parameter 336 [Service Factor]. If motor current exceeds the value of the curve, the value of Mtr OL Output integrates. The value of Mtr OL Output is visible in parameter 330 [Fault TP Data] when the value of parameter 329 [Fault TP Sel] equals 13.

Overspeed Limit

The absolute overspeed limit parameter, parameter 335 [Abs OverSpd Lim], is an adjustable setting. This sets a limit tolerance below parameter 30 [Rev Speed Lim] and above parameter 31 [Fwd Speed Lim], that is allowable. This can be used as a safe working speed limit.

Example 1 Speed reference is set to equal parameter 31 [Fwd Speed Lim]. Based on tuning of the drive, the speed could overshoot the commanded speed. If parameter 335 [Abs OverSpd Lim] is set equal to the forward speed limit and an overshoot is speed occurs, the drive will fault on an absolute overspeed.

Example 2 Drive is configured as a torque follower. If the mechanical connection to the load is severed, the torque command to the drive will probably be greater than the motor unloaded will require to maintain the system speed. This will cause the motor speed to increase until the torque command is met. Setting parameter 335 [Abs OverSpd Lim] to the safe motor speed will cause the fault to occur when the motor speed increase beyond this limit.

Stop Dwell Time

Sets an adjustable delay time between detecting zero speed and disabling the speed and torque regulators, when responding to a stop command.

Important: Consult industry and local codes when setting the value of this parameter.

Figure C.3 Drive Operation When Parameter 154 [Stop Dwell Time] Equals Zero

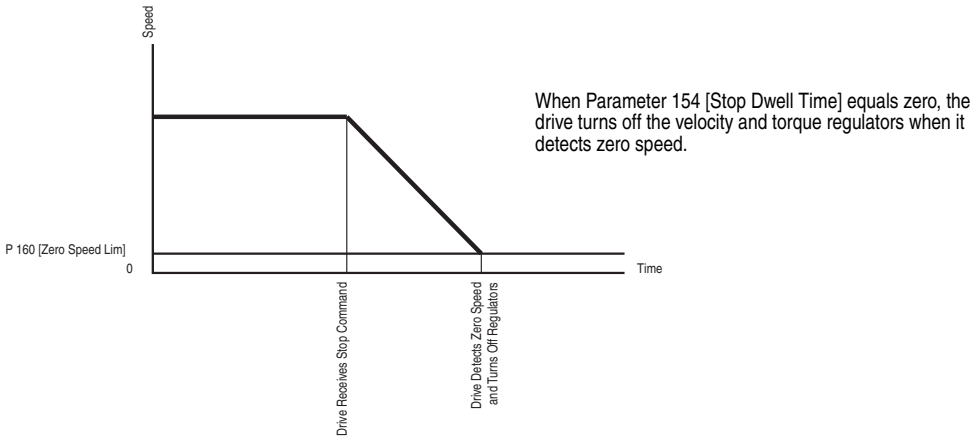

Figure C.4 Drive Operation When Parameter 154 [Stop Dwell Time] Equals Zero

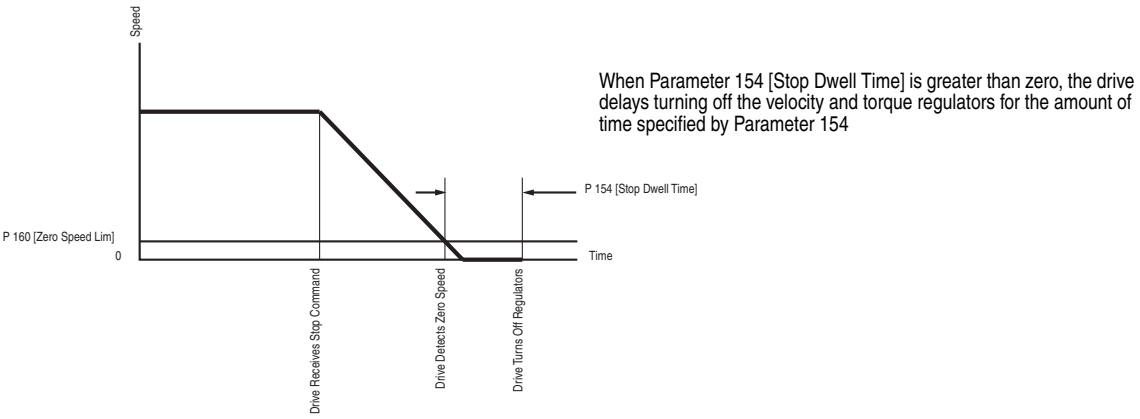

Setpt 1 Data

Provides data for comparison of Par 172 [Setpt 1 Data] to Par 173 [Setpt1 TripPoint], driving bit 16 [At Setpt 1] of Par 155 [Logic Status].

Figure C.5 At Setpoint 1 Status

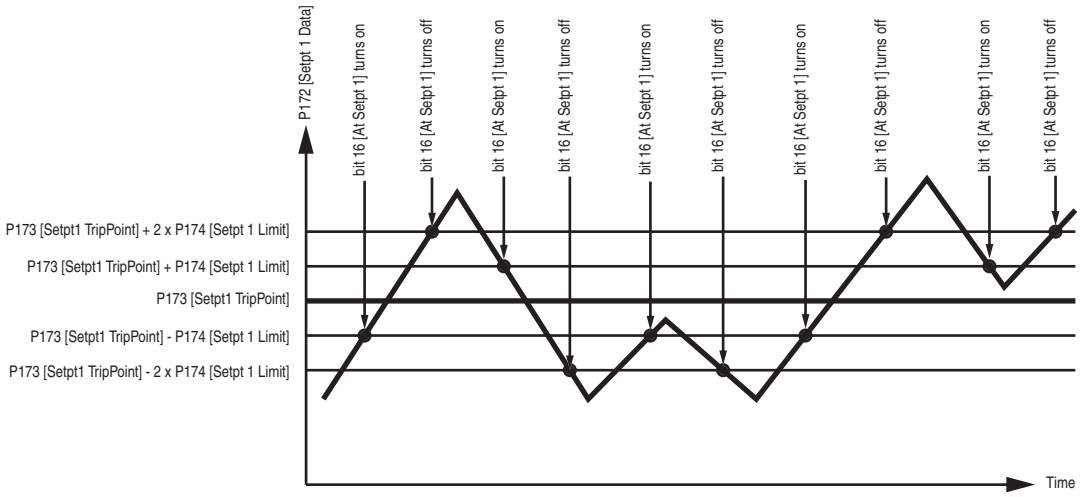

Setpt 2 Data

Provides data for comparison of Par175 [Setpt 2 Data] to Par 176 [Setpt2 TripPoint], driving bit 17 [Above Setpt 2] of Par 155 [Logic Status].

Figure C.6 Above Setpoint 2 Status

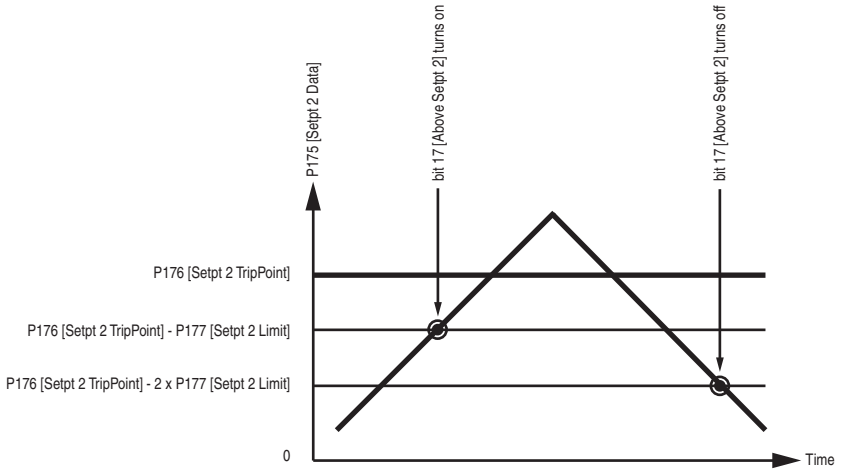

HIM Overview

For Information on …	See Page...
External and Internal Connections	D-1
LCD Display Elements	D-2
Removing/Installing the HIM	D-3

External and Internal Connections

The PowerFlex 700S provides cable connection for a handheld HIM or Port Expander/Splitter (Frame 1 shown).

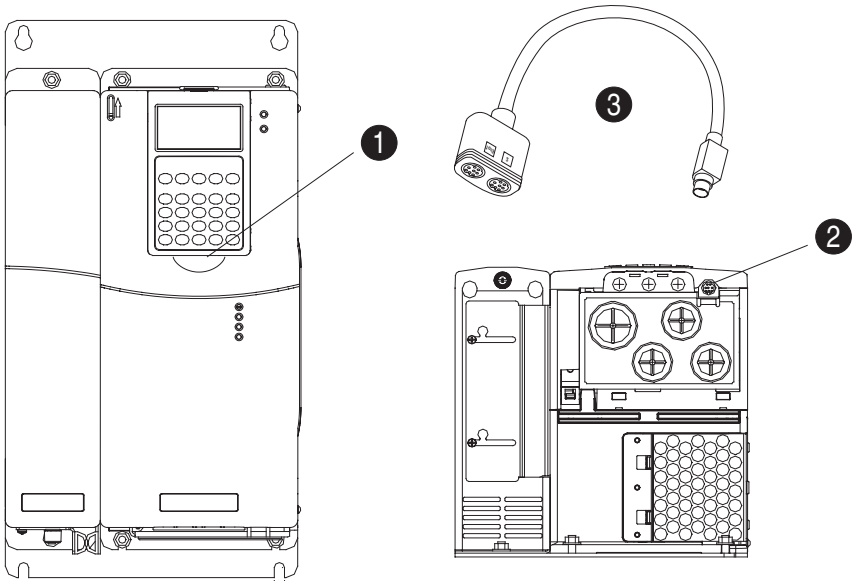

.

No.	Connector	Description
❶	DPI Port 1	HIM connection when installed in cover.
❷	DPI Port 2	Cable connection for handheld and remote options.
❸	DPI Port 3 or 2	Splitter cable connected to DPI Port 2 provides additional port.

LCD Display Elements

Display	Description
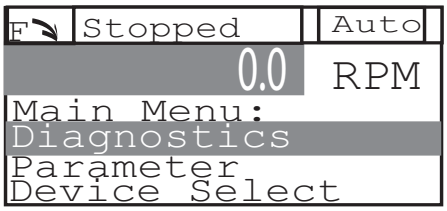	Direction | Drive Status | Alarm | Auto/Manual | Information Commanded or Output Frequency Programming / Monitoring / Troubleshooting

ALT Functions

To use an ALT function, press the ALT key release it, then press the programming key associated with one of the following functions:

Table D.A ALT Key Functions

ALT Key and then...			
ALT	Esc	S.M.A.R.T.	Function not available
	Sel	View	Allows the selection of how parameters will be viewed or detailed information about a parameter or component.
	▲	Lang	Not Functional at this time
	▼	Auto/Man	Function not available
	↵	Remove	Allows HIM removal without causing a fault if the HIM is not the last controlling device and does not have Manual control of the drive.
	.	Exp	Allows the value to be entered as an exponent.
	+/–	Param #	Allows entry of a parameter number for viewing/editing.

Removing/Installing the HIM

The HIM can be removed or installed while the drive is powered.

Step	Key(s)	Example Displays
To remove the HIM... 1. Press ALT and then Enter (Remove). The Remove HIM configuration screen appears. 2. Press Enter to confirm that you want to remove the HIM. 3. Remove the HIM from the drive. To install HIM... 1. Insert into drive or connect cable.	ALT + ↵	Remove Op Intrfc: Press Enter to Disconnect Op Intfc? (Port 1 Control)

Notes:

PowerFlex 700S Stegmann Hi-Resolution Encoder Feedback Option

Chapter Objectives

For Information on …	See Page...
Specifications	E-1
Wiring the Stegmann Hi-Resolution Feedback Option Card to an Encoder	E-2

Specifications

Stegmann Hi-Resolution Feedback Option Card Specifications

Consideration	Description
Encoder Voltage Supply	11.5V dc @ 130 mA
Hi-Resolution Feedback	Sine/Cosine 1V P-P Offset 2.5
Maximum Cable Length	90m (295 ft)
Maximum Frequency (Encoder Speed)	12.5 µs/cycle (4687.5 RPM for encoders with 1024 sine cycles per revolution) (9375 RPM for encoders with 512 sine cycles per revolution)
RS-485 Interface	The Hi-Resolution Feedback Option card obtains the following information via the Hiperface RS-485 interface shortly after power-up: • Address • Command Number • Mode • Number of turns • Number of Sine/Cos cycles • Checksum
Customer-I/O plug (P1)	Allen-Bradley PN: S94262912 Weidmuller PN: BL3.50/90/12BK

Supported Encoders

Table E.A specifies which encoders are supported by the 700S Hi-Resolution Stegmann Encoder Feedback Option module.

Important: Please note that encoders must be ordered as "Single Ended". This will ensure that the RS-485 channel has the proper termination network installed at the factory.

Table E.A Supported Stegmann Encoders

Model	Resolution	Comment
SINCOS® SCS-60, SCS-70, SCM-60, and SCM-70	512 sine cycles per revolution.	SCM-60 and SCM-70 have built-in mechanical turns counter.
SINCOS® SCS-KIT-101 and SCM-KIT-101	1024 sine cycles per revolution.	SCM-60 and SCM-70 have built-in mechanical turns counter.
SINCOS® SRS-50, SRS-60, SRM-50, and SRM-60	1024 sine cycles per revolution.	SRM-50 and SRM-60 have built-in mechanical turns counter.
SINCOS® SRS/M 25	1024 sine cycles per revolution	SRS25 and SRM25 have built-in mechanical turns counter. IP65 Protection Class. Size 25 square flange mounting.
SINCOS® SRS660	1024 sine cycles per revolution	Hollow-shaft up to 14 mm diameter
SINCOS® SHS-170	512 sine cycles per revolution.	While the software supports this encoder, the SHS-170 draws excessive current and should only be used with an external power supply.

SINCOS®, SINCODER® and LINCODER® are registered trademarks of Stegmann Inc.

Wiring the Stegmann Hi-Resolution Feedback Option Card to an Encoder

Terminal block P1 contains connection points for a Stegmann Hiperface® encoder. This terminal block resides on the Hi-Resolution Encoder Feedback Option card.

Hiperface® is a registered trademark of Stegmann Inc.

Figure E.1 Control Assembly Sliding Access Panel

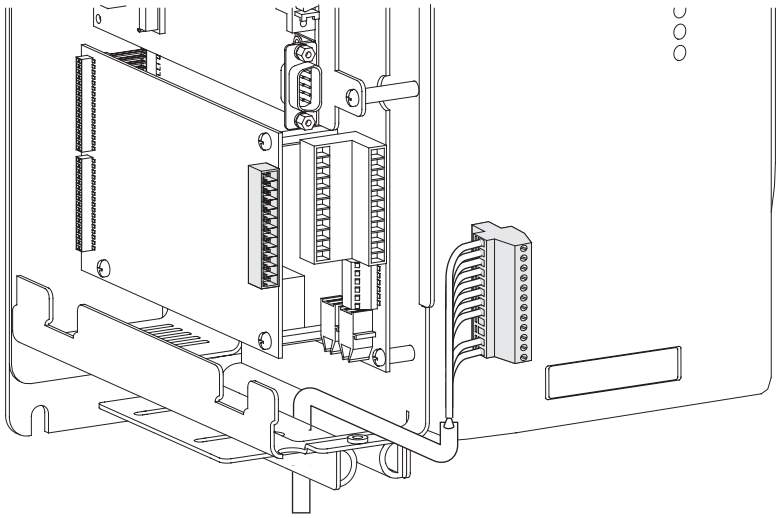

▶ **TIP:** Remember to route wires through the sliding access panel at the bottom of the Control Assembly.

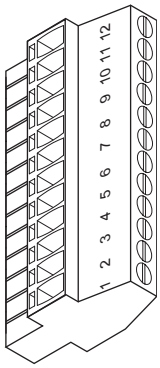

Terminal	Signal	Description
12	POWER COMMON	Power supply for encoder interface.
11	POWER	
10	REFSIN	Negative Sine signal.
9	+SIN	Positive Sine signal.
8	REFCOS	Negative Cosine signal.
7	+COS	Positive Cosine signal.
6	SHIELD	Connection point for encoder cable shield.
5	SHIELD	
4	N/C	Not connected.
3	N/C	
2	DATA+ (RS 485)	Positive DH485 terminal.
1	DATA- (RS 485)	Negative DH485 terminal.

Recommended Cables

If you are using this motor and feedback device:	Use this cable:	See this wiring diagram:
Allen-Bradley 1326AB-BXXXX-21ML, and -21MKXL motors with embedded Stegmann rotary encoder	Allen-Bradley 1326-CECU-XXL-XXX	Figure E.2 on page E-3
Allen-Bradley 1326AB-BXXXX-M2L, -M2KXL, -S2L, and -S2KXL motors with embedded Stegmann rotary encoder	Allen-Bradley 2090-CDNFDMP-SXX	Figure E.3 on page E-4
Allen-Bradley MP-Series 460V motors with embedded Stegmann rotary encoder	Allen-Bradley 2090-CDNFDMP-SXX or 2090-XXNFMP-SXX	Figure E.3 on page E-4
Allen-Bradley MP-Series 230V motors with embedded Stegmann rotary encoder	Allen-Bradley 2090-UXNFDMP-SXX or 2090-XXNFMP-SXX	Figure E.4 on page E-4
Any other motor with external Stegmann SHS-170 rotary encoder	Stegmann shielded twisted-pair cable with12-pin DIN style connector	Figure E.5 on page E-4
Any other motor with external Stegmann SCS-60, SCS-70, SCM-60 or SCM-70, SRS-50, SRS-60, SRM-60, SRM-60, SRS-25 or SRM-252 rotary encoder	Stegmann shielded twisted-pair cable with 12-pin DIN style connector or 8-pin Berg style connector	Figure E.5 on page E-4 or Figure E.7 on page E-5
Any other motor with external Stegmann SCS-Kit 101 or SCK-Kit 101 rotary encoder	Stegmann shielded twisted-pair cable with 8-pin Berg style connector	Figure E.7 on page E-5
Any other motor with external Stegmann SRS660 rotary encoder	Is available only with pre-attached Stegmann shielded twisted-pair cable of various lengths	Figure E.8 on page E-5

Connection Examples

Figure E.2 1326-CECU-XXL-XXX cable

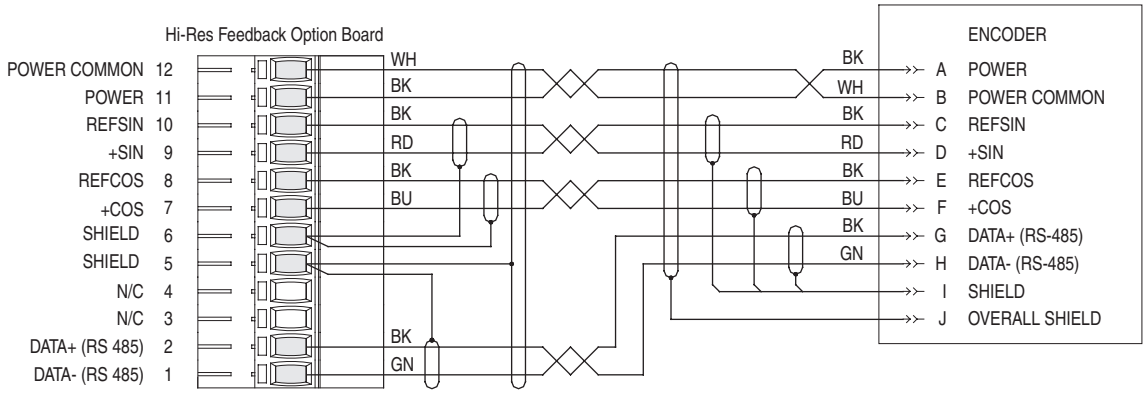

Connection Examples

Figure E.3 460V MP Series Motor with 2090-CDNFDMP-SXX or 2090-XXNFMP-SXX cable; or 1326AB-BXXXX-M2L, -M2KXL, -S2L, and -S2KXL motor with 2090-XXNFMP-SXX cable

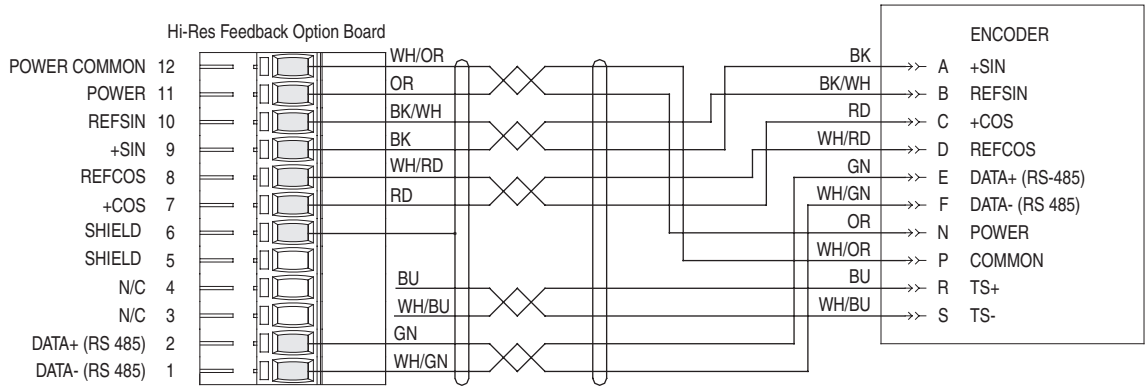

Figure E.4 230V MP Series Motor with 2090-UXNFDMP-SXX or 2090-XXNFMP-SXX cable

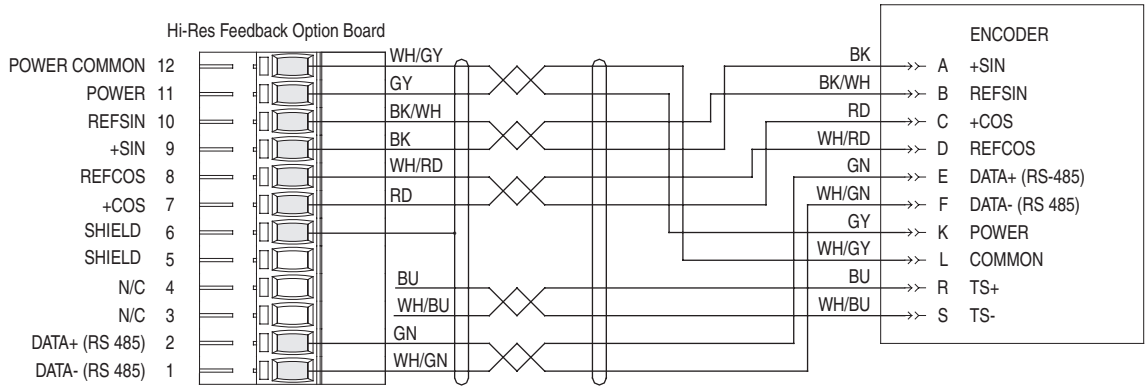

Figure E.5 Stegmann shielded twisted-pair cable with 12-pin DIN style connector

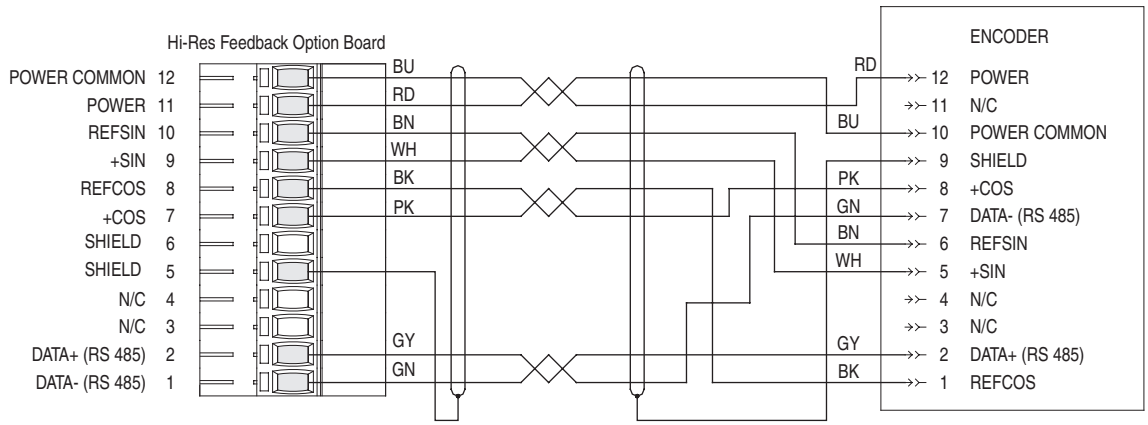

Connection Examples

Figure E.6 Stegmann shielded twisted-pair cable with 10-pin MS style connector

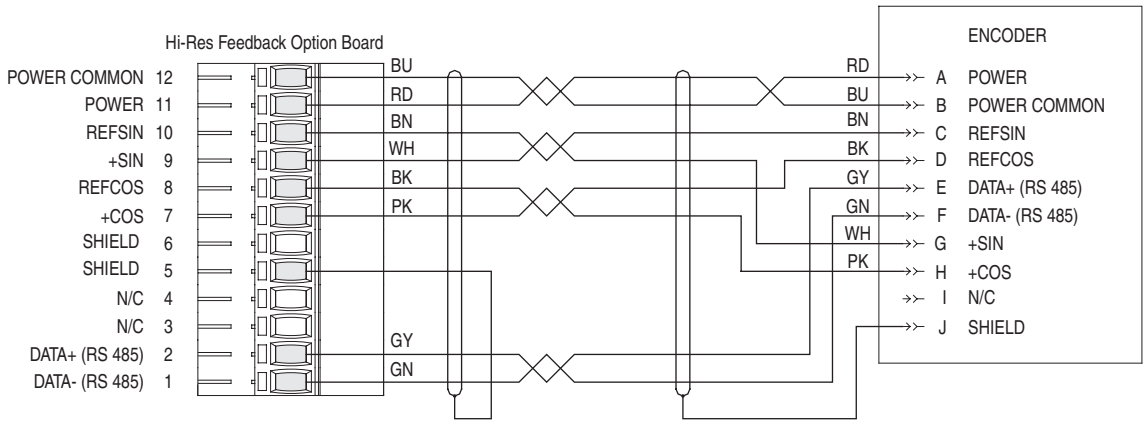

Figure E.7 Stegmann shielded twisted-pair cable with 8-pin Berg style connector

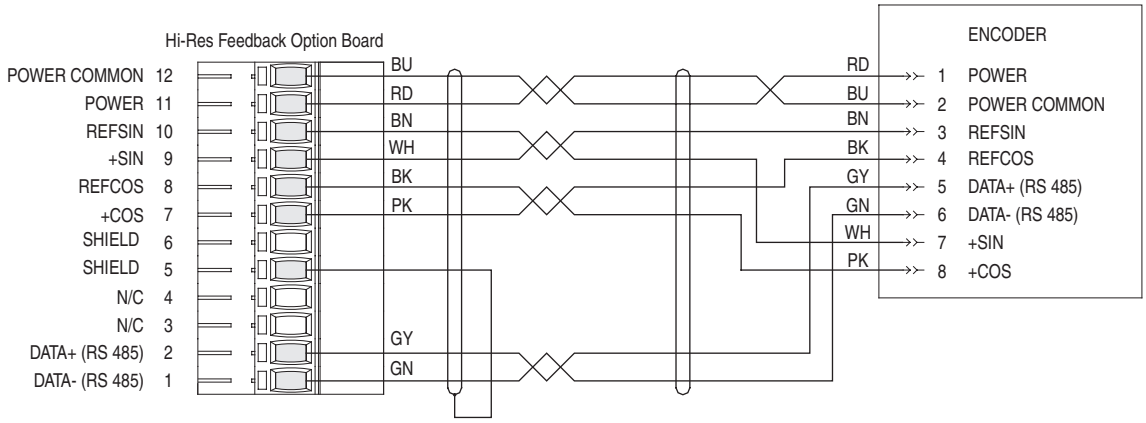

Figure E.8 Stegmann pre-attached shielded twisted-pair cable

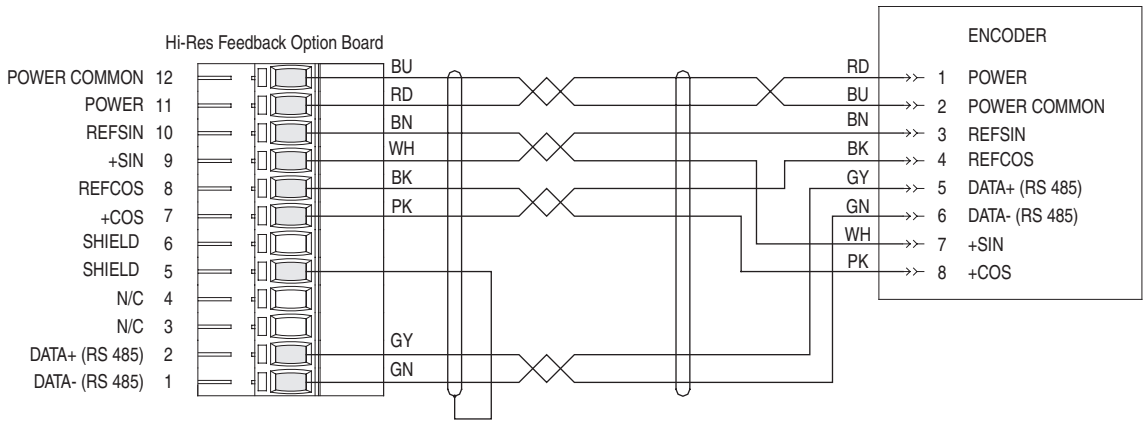

Notes:

PowerFlex 700S Resolver Feedback Option Card

Chapter Objectives

For Information on …	See Page...
Chapter Objectives	F-1
Specifications	F-1

Specifications

Resolver Feedback Option Card Specifications

Consideration	Description
Excitation Frequency	2400 Hz
Excitation Voltage	26 Vrms
Resolver Feedback Voltage	2 Vrms +/- 300 mV
Customer-I/O plug (P1)	Allen-Bradley PN: S94262908 Weidmuller PN: BL3.50/90/8BK

Compatible Resolvers

Table G specifies which resolvers are supported by the 700S Resolver Feedback Option module.

Table G Compatible Resolvers.

Manufacturer	Manufacturer Catalog Number	Notes
Tamagawa	TS-2014N181E32	x 1, flange-mounted enclosure
Tamagawa	TS-2014N182E32	x 2, flange-mounted enclosure
Tamagawa	TS-2014N185E32	x 5, flange-mounted enclosure
Tamagawa	TS-2087N12E9	x 2, HD foot-mounted enclosure, double shaft
Tamagawa	TS-2087N1E9	x 1, HD foot-mounted enclosure
Tamagawa	TS-2087N2E9	x 2, HD foot-mounted enclosure
Tamagawa	TS-2087N5E9	x 5, HD foot-mounted enclosure
Tamagawa	TS-2087N11E9	x 1, HD foot-mounted enclosure, double shaft
Advanced Micro Controls Inc. (AMCI)	R11X-C10/7	

Allen-Bradley servo motors may be ordered with factory installed resolvers. Table H specifies which factory installed resolvers are supported by the 700S Resolver Feedback Option module.

Table H Compatibility with Resolvers on Allen-Bradley Motors

Motor / Resolver Type	Compatible	Notes
1326 AB 230V Primary Resolver	No	Receiver type - not supported
1326 AB 230V Secondary Resolver	Yes	Transmitter type - supported Secondary resolver is geared to motor - not intended for motor speed / position feedback
1326 AB 460V Primary Resolver	Yes	Transmitter type - supported
1326 AB 460V Secondary Resolver	Yes	Transmitter type - supported Secondary resolver is geared to motor - not intended for motor speed / position feedback
1326AD 230V Rare Earth	No	Receiver type - not supported
1326AH 460V Explosion Proof Motor Primary Resolver	Yes	Transmitter type - supported
1326AH 460V Explosion Proof Motor Secondary Resolver	Yes	Transmitter type - supported Secondary resolver is geared to motor - not intended for motor speed / position feedback
1326AS 460V Rare Earth	Yes	Transmitter type - supported
MPL 460V	Yes	Transmitter type - supported

Wiring the Resolver Feedback Option Card to a Resolver

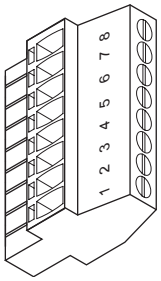

Terminal	Signal	Description
8	REF HIGH	Positive Reference signal
7	SHIELD	Connection point for resolver cable shield
6	REF LOW	Negative Reference signal
5	SIN HIGH	Positive Sine signal
4	SHIELD	Connection point for resolver cable shield
3	SIN LOW	Negative Sine signal
2	COS HIGH	Positive Cosine signal
1	COS LOW	Negative Cosine signal

Connection Examples

Resolver Interface - Clockwise Rotation = Count Up

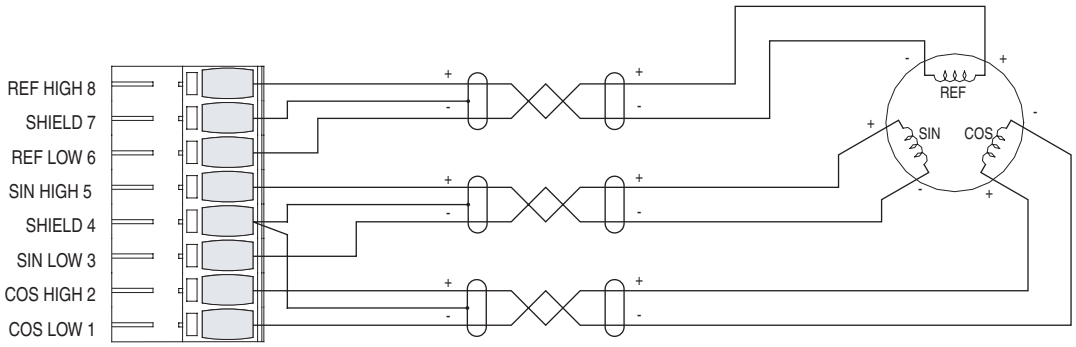

Resolver Interface - Clockwise Rotation = Count Down (Reverse Polarity of Sine or Cosine Signals)

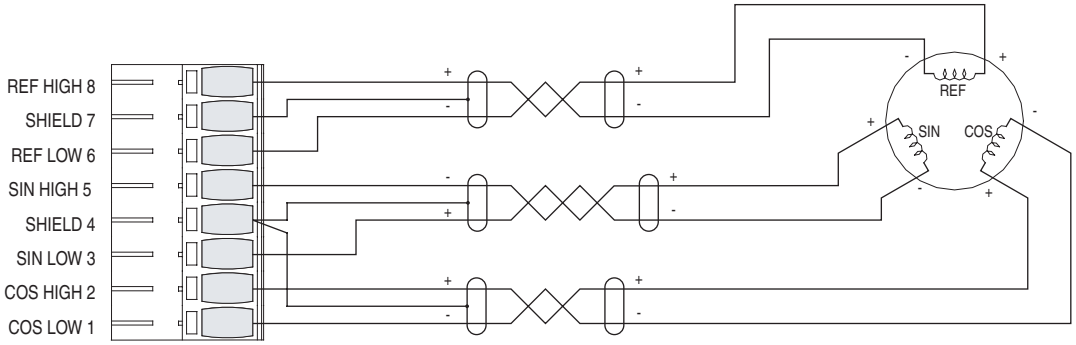

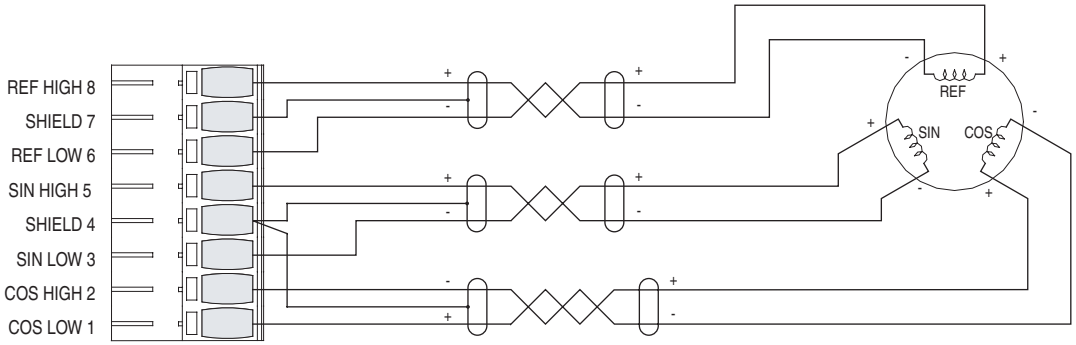

Notes

Access Procedures

Using this Appendix

For information about:	See page
Removing Cover(s)	G-1
Replacing Cover(s)	G-2

Removing Cover(s)

Task	Description
Ⓐ	Loosen captive screw
Ⓑ	Push down on front cover
Ⓒ	Pull front cover away from assembly
Ⓓ	Pull side cover forward
Ⓔ	Lift side cover off of control assembly

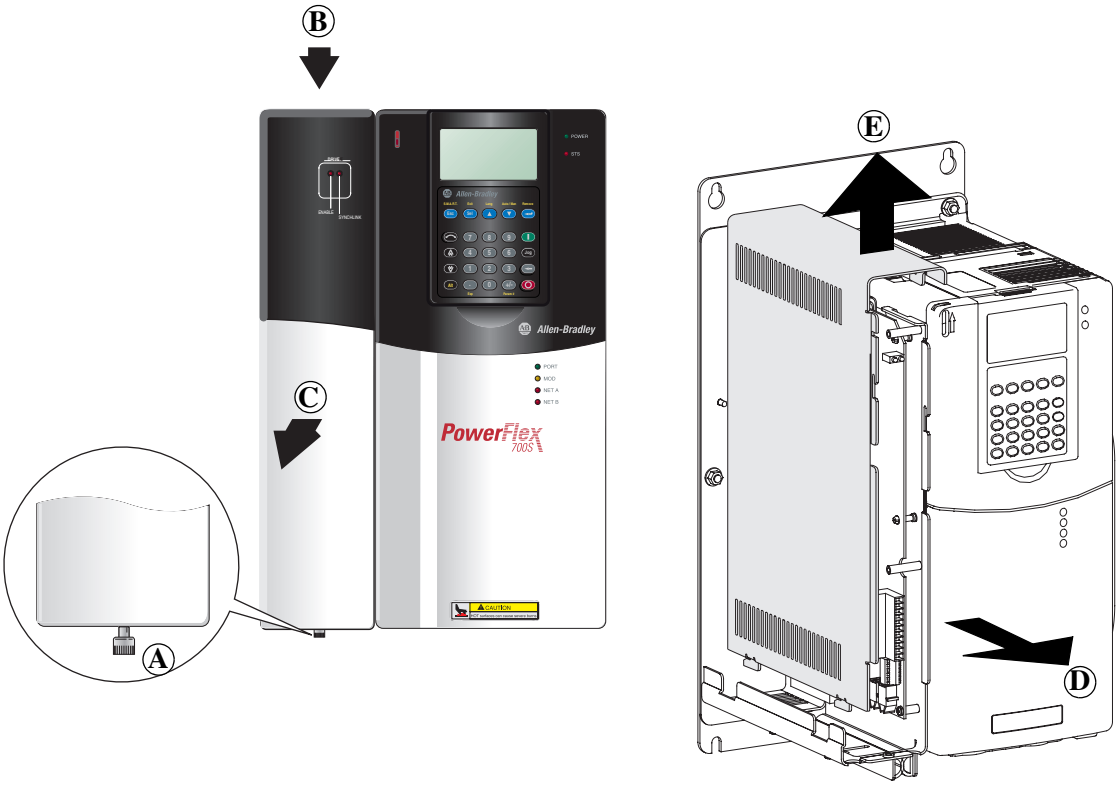

Replacing Cover(s)

Task	Description
Ⓐ	Align tabs on side cover with slots on drive
Ⓑ	Push side cover down onto control assembly
Ⓒ	Push side cover back onto control assembly

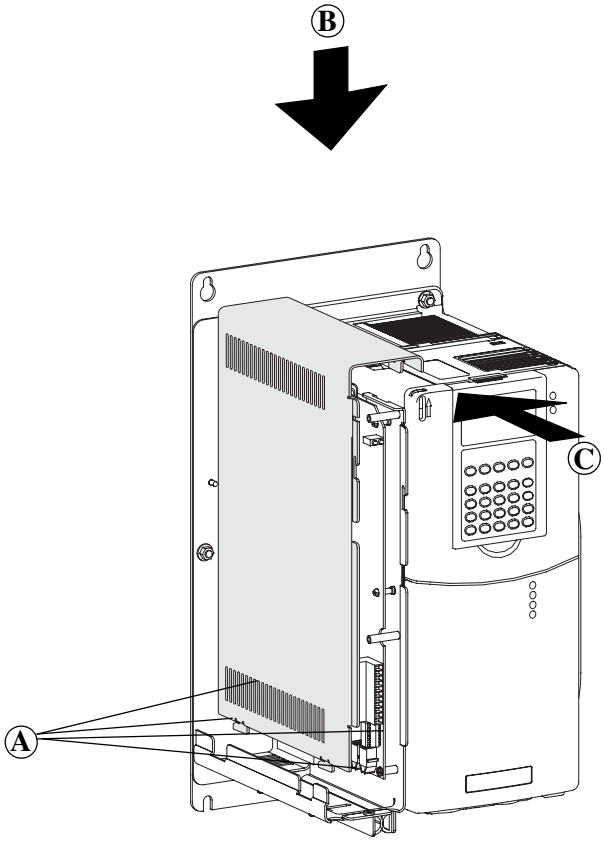

Task	Description
D	Locate tabs on inside of front cover
E	Align tabs on front cover with slots on flanges
F	Push front cover onto drive
G	Push front cover up into slots
H	Tighten captive screw

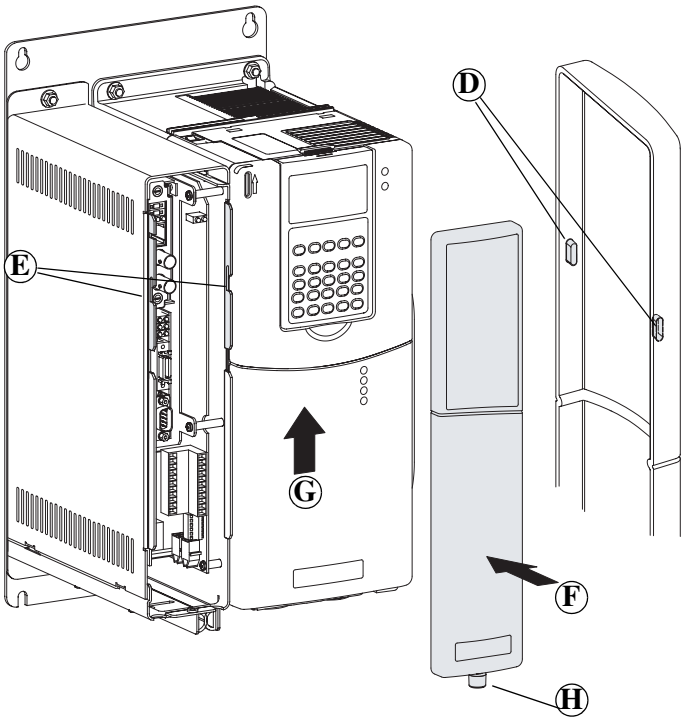

Notes

PowerFlex 700S Multi-Device Interface Option Card

For information about:	See page
Specifications	H-1
Wiring the MDI Option Card	H-3

Specifications

MDI Option Card Specifications

Consideration	Description
Rotary Encoder Voltage Supply	11.5V dc @ 130 mA
Rotary Encoder Hi-Resolution Feedback	Sine/Cosine 1V P-P Offset 2.5
Rotary Encoder Maximum Cable Length	182m (600 ft.)
Rotary Encoder RS-485 Interface	The MDI Option card obtains the following information via the Hiperface RS-485 interface shortly after power-up: • Address • Command Number • Mode • Number of turns • Number of Sine/Cos cycles • Checksum
Registration Inputs	high speed 12-24V dc sinking digital inputs
Customer-I/O plug (P1)	Allen-Bradley PN: S94274917 Weidmuller PN: 67601782

Supported Linear Sensors

Temposonics® III Linear sensors with MTS® part numbers ending in 1S2G1102 work with the MDI Option.

Part Number Character	Characteristic
1	Input Voltage = +24Vdc
S	SSI output
2	Data Length = 24 Bits
G	Output Format = Gray Code
1	Resolution = 0.005 mm
1	Performance = Standard
02	Scale Orientation = Forward-acting Synchronized

Temposonics® is a registered trademark of MTS Systems Corporation.

Supported Rotary Encoders

Table H.A specifies which encoders work with the MDI Option.

Important: Please note that encoders must be ordered as "Single Ended". This will ensure that the RS-485 channel has the proper termination network installed at the factory.

Table H.A Supported Stegmann Rotary Encoders

Model	Resolution	Comment
SINCOS® SCS-60, SCS-70, SCM-60, and SCM-70	512 sine cycles per revolution.	SCM-60 and SCM-70 have built-in mechanical turns counter.
SINCOS® SCS-KIT-101 and SCM-KIT-101	1024 sine cycles per revolution.	SCM-60 and SCM-70 have built-in mechanical turns counter.
SINCOS® SRS-50, SRS-60, SRM-50, and SRM-60	1024 sine cycles per revolution.	SRM-50 and SRM-60 have built-in mechanical turns counter.
SINCOS® SRS/M 25	1024 sine cycles per revolution	SRS25 and SRM25 have built-in mechanical turns counter. IP65 Protection Class. Size 25 square flange mounting.
SINCOS® SRS660	1024 sine cycles per revolution	Hollow-shaft up to 14 mm diameter
SINCOS® SHS-170	512 sine cycles per revolution.	While the software supports this encoder, the SHS-170 draws excessive current and should only be used with an external power supply.

SINCOS®, SINCODER® and LINCODER® are registered trademarks of Stegmann Inc.

Recommended Cables

If you are using this motor and feedback device:	Use this cable:
Temposonics III Linear sensors with MTS part numbers ending in 1S2G1102	Mating MTS molded extension cable for RG connector or integral P cable
Allen-Bradley 1326AB-BXXXX-21ML, and -21MKXL motors with embedded Stegmann rotary encoder	Allen-Bradley 1326-CECU-XXL-XXX
Allen-Bradley 1326AB-BXXXX-M2L, -M2KXL, -S2L, and -S2KXL motors with embedded Stegmann rotary encoder	Allen-Bradley 2090-CDNFDMP-SXX
Any other motor with external Stegmann SRS/SRM25 rotary encoder	Stegmann 6-411562-XX cables with 10-Pin MS connector assembly 6-430080-00
Any other motor with other external Stegmann rotary encoders	Stegmann 6-411682-XX cables with C12 FUR connectors **Important:** Please note that encoders must be ordered with the C12 FUR connectors to accommodate these cables.

Wiring the MDI Option Card

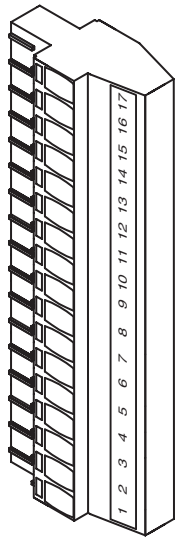

Terminal	Signal	Description
17	Rotary Encoder POWER COMMON	Power supply for Rotary Encoder interface
16	Rotary Encoder POWER	
15	Rotary Encoder REFSIN	Positive Sine signal for Rotary Encoder interface
14	Rotary Encoder +SIN	Negative Sine signal for Rotary Encoder interface
13	Rotary Encoder REFCOS	Negative Cosine signal for Rotary Encoder interface
12	Rotary Encoder +COS	Positive Cosine signal for Rotary Encoder interface
11	Rotary Encoder DATA+ (RS485)	Positive DH485 terminal for Rotary Encoder interface
10	Rotary Encoder DATA- (RS485)	Negative DH485 terminal for Rotary Encoder interface
9	Linear Sensor CLOCK+	Positive Clock terminal for Linear Sensor interface
8	Linear Sensor CLOCK-	Negative Clock terminal for Linear Sensor interface
7	Linear Sensor DATA+	Positive SSI terminal for Linear Sensor interface
6	Linear Sensor DATA-	Negative SSI terminal for Linear Sensor interface
5	Rotary Encoder REGISTRATION+	Positive terminal for Rotary Encoder registration strobe
4	Rotary Encoder REGISTRATION-	Negative terminal for Rotary Encoder registration strobe
3	Linear Sensor REGISTRATION+	Positive terminal for Linear Sensor registration strobe
2	Linear Sensor REGISTRATION-	Negative terminal for Linear Sensor registration strobe
1	CHASSIS GND	Connection point for cable shields

Connection Examples

Linear Sensor Connections with MDI RG Connector or P Integral Cable

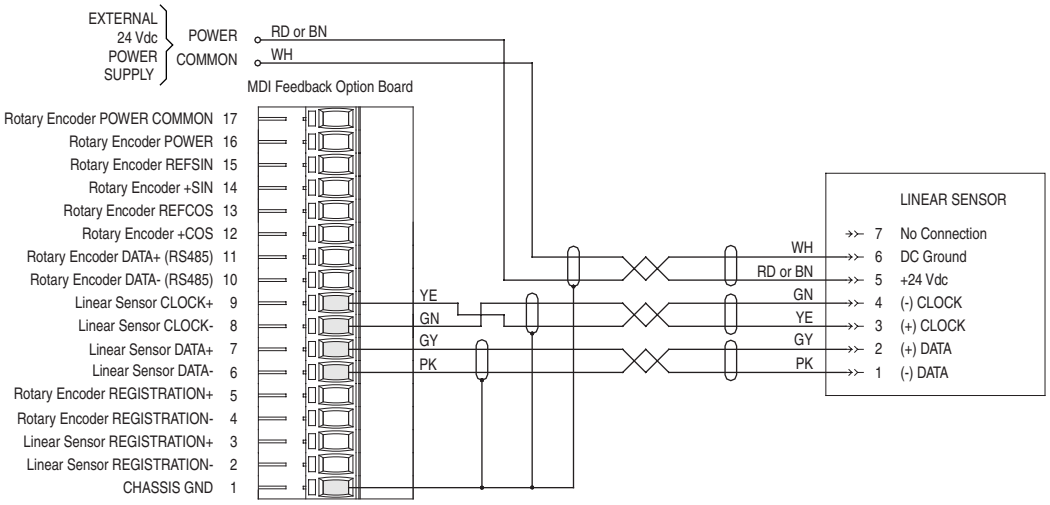

Rotary Encoder Connections with Allen-Bradley 1326-CECU-XXL-XXX Cable

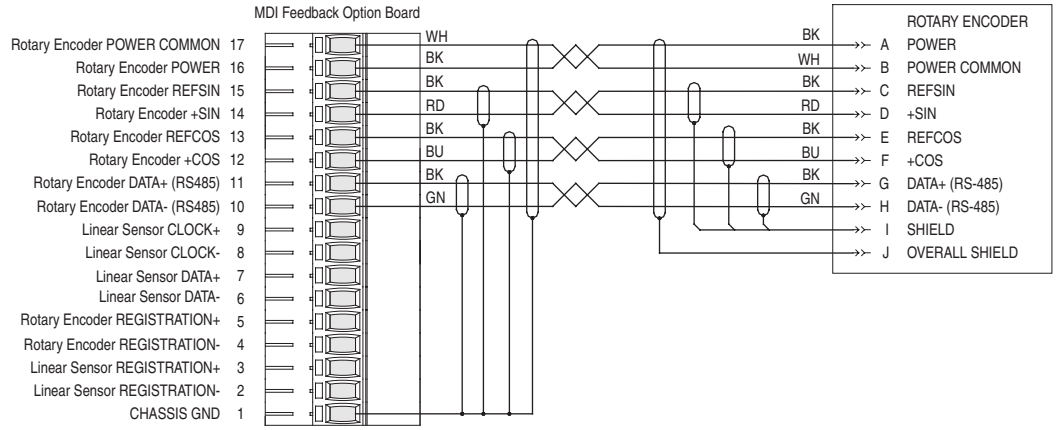

Rotary Encoder Connections for 460V MP Series Motor with 2090-CDNFDMP-SXX or 2090-XXNFMP-SXX cable; or 1326AB-BXXXX-M2L, -M2KXL, -S2L, and -S2KXL motor with 2090-XXNFMP-SXX cable

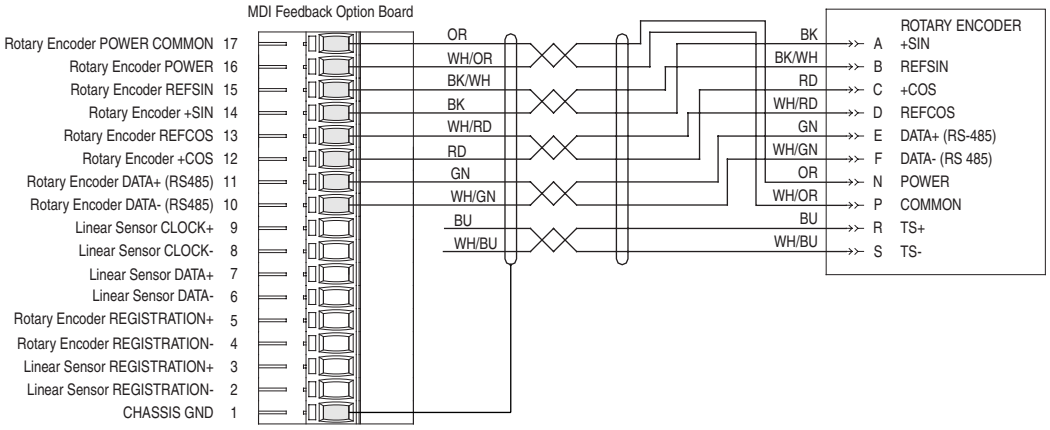

Connection Examples

Rotary Encoder Connections for 230V MP Series Motor with 2090-UXNFDMP-SXX or 2090-XXNFMP-SXX cable

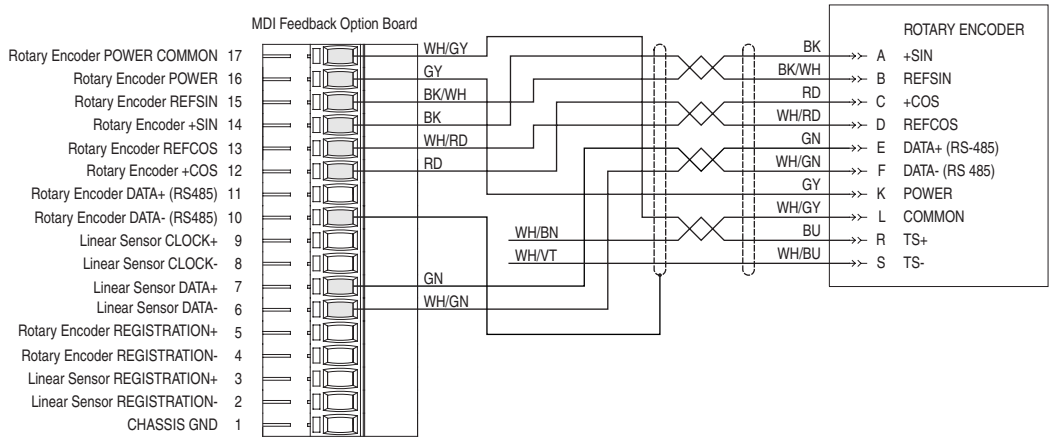

Stegmann shielded twisted-pair cable with 10-pin MS style connector

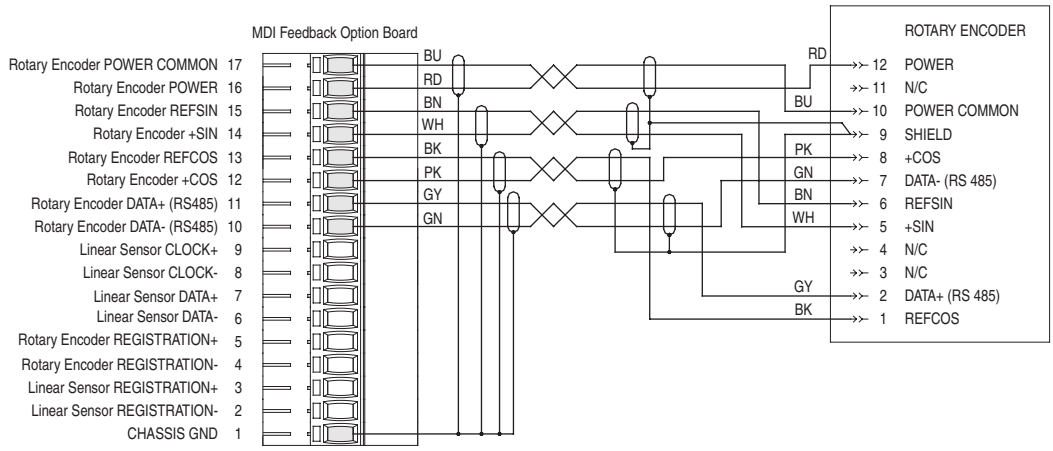

Rotary Encoder Connections with Stegmann shielded twisted-pair cable and 10-pin MS style connector

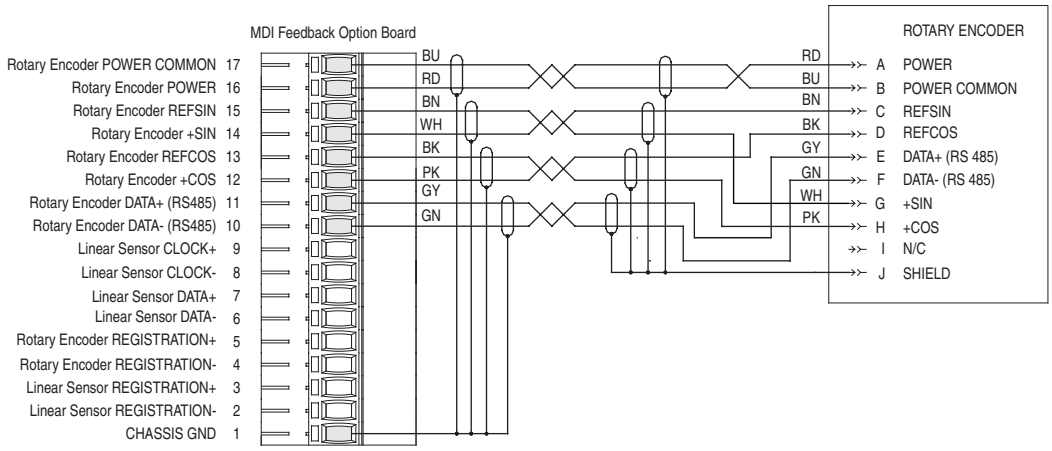

Connection Examples

Rotary Encoder Connections with Stegmann shielded twisted-pair cable and 8-pin Berg style connector

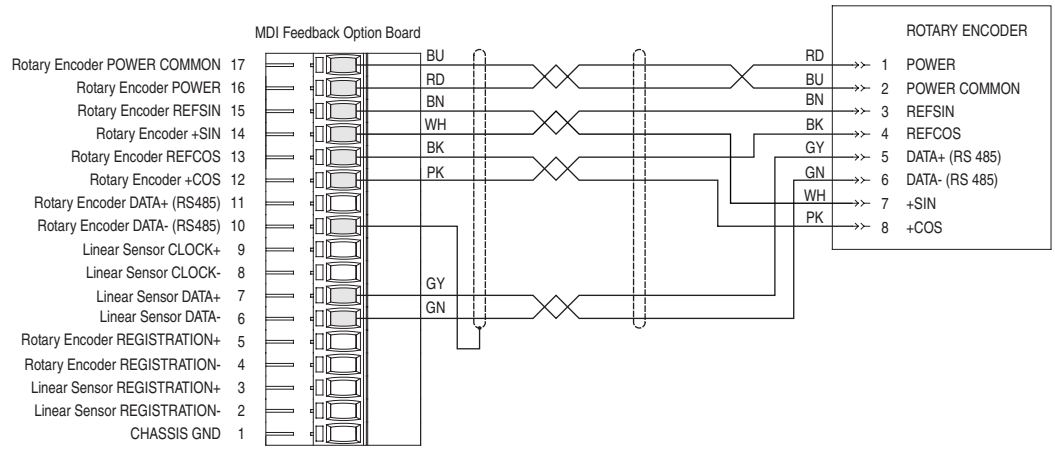

Rotary Encoder Connections with Stegmann pre-attached shielded twisted-pair cable

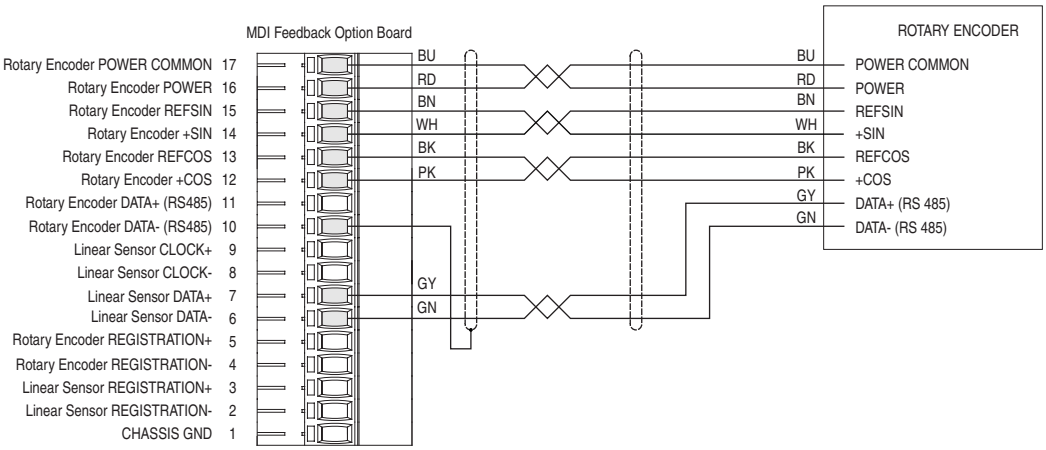

Registration Sensor Connection

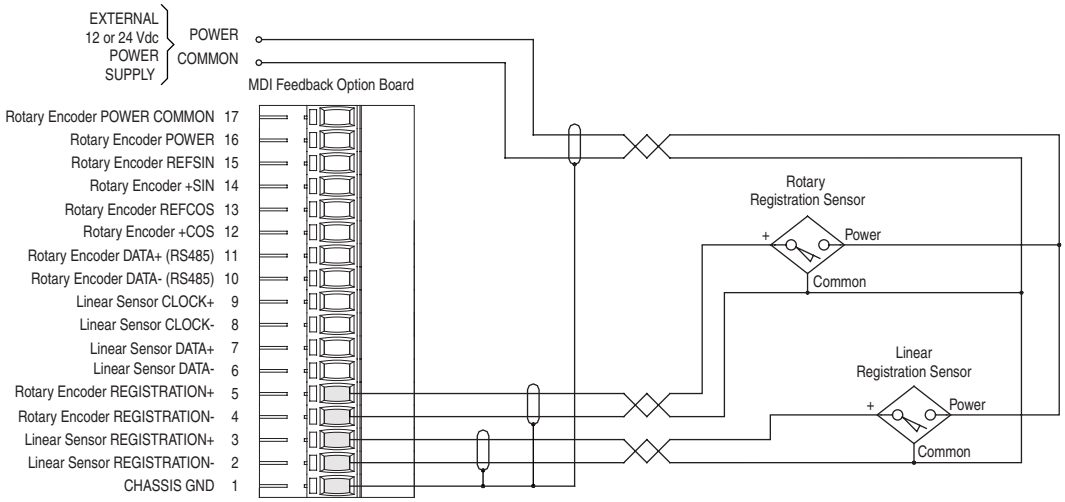

PowerFlex 700S Permanent Magnet Motor Specifications

Compatible Permanent Magnet Motors

The following table contains a list of specifications for the permanent magnet motors compatible with PowerFlex 700S drives. Note that you must have a high resolution Stegmann or compatible resolver.

Table I.A Motor Name Plate and Rating Specifications

Model Number	Motor NP Volts (line to line V rms)	Motor NP FLA (A rms)	Motor NP Frequency (Hz)	Motor NP RPM (oper. rpm)	Motor NP Power (KW)	Motor Poles	Current peak (A rms)	System Cont. Stall Torque (N-m)	Motor Max RPM (rpm)
Parameter #	**1**	**2**	**3**	**4**	**5**	**7**			
MPL-A310P	230	3.4	294.0	4410	0.73	8	9.9,	1.58	5000
MPL-A310F	230	2.1	185.3	2780	0.46	8	6.6	1.58	3000
MPL-A320P	230	6.4	271.3	4070	1.30	8	20.9	3.05	5000
MPL-A320H	230	4.6	208.7	3130	1.00	8	13.6	3.05	3500
MPL-A330P	230	8.5	280.7	4210	1.80	8	26.9	4.08	5000
MPL-A420P	230	9.0	268.7	4030	2.00	8	32.5	4.74	5000
MPL-A430P	230	11.9	234.0	3510	2.20	8	47.4	5.99	5000
MPL-A430H	230	8.6	184.7	2770	1.80	8	31.8	6.21	3500
MPL-A4520P	230	12.4	234.0	3510	2.20	8	35.4	5.99	5000
MPL-A4520K	230	10.6	223.3	3350	2.10	8	30.4	5.99	4000
MPL-A4530F	230	9.5	144.7	2170	1.90	8	29.7	8.36	2800
MPL-A4530K	230	14.4	196.0	2940	2.50	8	43.8	8.13	4000
MPL-A4540C	230	6.6	93.3	1400	1.50	8	20.5	10.20	1500
MPL-A4540F	230	13.0	162.0	2430	2.60	8	38.2	10.20	3000
MPL-A520K	230	16.3	208.0	3120	3.50	8	46.0	10.70	4000
MPL-A540K	230	29.3	180.7	2710	5.50	8	84.9	19.40	4000
MPL-A560F	230	29.3	125.3	1880	5.50	8	84.9	27.90	3000
MPL-B310P	460	1.7	310.0	4650	0.77	8	3.0	1.58	5000
MPL-B320P	460	3.2	313.3	4700	1.50	8	5.0	3.05	5000
MPL-B330P	460	4.3	274.0	4110	1.80	8	7.0	4.18	5000
MPL-B420P	460	4.5	255.3	3830	1.90	8	9.2	4.74	5000
MPL-B430P	460	6.5	214.0	3210	2.20	8	12.0	6.55	5000
MPL-B4520P	460	6.0	236.7	3550	2.10	8	17.0	5.65	5000
MPL-B4530F	460	5.0	162.0	2430	2.10	8	13.4	8.25	3000
MPL-B4530K	460	7.8	200.7	3010	2.60	8	19.1	8.25	4000
MPL-B4540F	460	6.4	162.0	2430	2.60	8	16.3	10.20	3000
MPL-B4560F	460	8.3	144.7	2170	3.20	8	25.5	14.10	3000
MPL-B520K	460	8.1	208.0	3120	3.50	8	23.3	10.70	4000
MPL-B540K	460	14.5	177.3	2660	5.40	8	42.4	19.40	4000
MPL-B560F	460	14.5	130.7	1960	5.50	8	42.4	26.80	3000
MPL-B580F	460	18.4	132.7	1990	7.10	8	66.5	34.00	3000
MPL-B580J	460	22.6	148.0	2220	7.90	8	66.5	34.00	3800
MPL-B640F	460	22.7	106.0	1590	6.11	8	46.0	36.70	3000
MPL-B660F	460	27.2	81.3	1220	6.15	8	67.9	48.00	3000
MPL-B680D	460	24.0	94.0	1410	9.30	8	66.5	62.80	2000
MPL-B680F	460	33.9	79.3	1190	7.50	8	67.9	60.00	3000
MPL-B860D	460	33.6	96.0	1440	12.50	8	67.5	83.10	2000
MPL-B880C	460	33.6	72.7	1090	12.60	8	69.0	110.00	1500
MPL-B880D	460	40.3	86.7	1300	15.00	8	113.2	110.00	2000
MPL-B960B	460	29.7	62.0	930	12.70	8	63.6	130.00	1200
MPL-B960C	460	38.9	76.0	1140	14.80	8	88.4	124.30	1500
MPL-B960D	460	50.2	76.7	1150	15.00	8	102.5	124.30	2000
MPL-B980B	460	31.8	59.3	890	15.02	8	70.7	162.70	1000
MPL-B980C	460	48.2	67.3	1010	16.80	8	99.0	158.20	1500
MPL-B980D	460	63.6	74.7	1120	18.60	8	141.4	158.20	2000

Model Number	Motor NP Volts (line to line V rms)	Motor NP FLA (A rms)	Motor NP Frequency (Hz)	Motor NP RPM (oper. rpm)	Motor NP Power (KW)	Motor Poles	Current peak (A rms)	System Cont. Stall Torque (N-m)	Motor Max RPM (rpm)
MPG-A004-031	230	1.8	222.7	3340	0.21	8	4.0	0.60	6000
MPG-A010-031	230	2.1	189.3	2840	0.36	8	6.0	1.21	4875
MPG-A010-091	230	0.9	295.3	4430	0.19	8	2.3	0.41	5900
MPG-A025-031	230	9.9	181.0	1810	0.88	12	19.8	4.65	5200
MPG-A025-091	230	3.0	168.0	1680	0.52	12	8.5	2.95	5625
MPG-A050-031	230	24.7	120.0	1200	1.50	12	53.0	11.90	2510
MPG-A050-091	230	5.0	275.0	2750	0.75	12	15.6	2.60	3775
MPG-A110-031	230	20.2	122.0	1220	2.20	12	53.0	17.20	2875
MPG-A110-091	230	17.0	184.0	1840	1.60	12	33.2	8.30	3500
MPG-B010-031	460	1.6	162.7	2440	0.34	8	4.4	1.33	6450
MPG-B010-091	460	0.7	357.3	5360	0.23	8	1.5	0.41	6450
MPG-B025-031	460	4.0	219.0	2190	0.92	12	11.3	4.02	4838
MPG-B025-091	460	1.9	175.0	1750	0.54	12	5.2	2.95	5900
MPG-B050-031	460	16.3	92.0	920	1.20	12	32.5	12.40	2510
MPG-B050-091	460	3.4	290.0	2900	0.79	12	9.9	2.60	4560
MPG-B110-031	460	12.9	112.0	1120	2.00	12	31.1	17.00	2420
MPG-B110-091	460	10.6	184.0	1840	1.60	12	20.5	8.30	3500
1326AB-B410G	460	2.5	118.0	3540	1.00	4	7.4	2.70	5000
1326AB-B410J	460	3.5	165.0	4950	1.40	4	10.4	2.70	7250
1326AB-B420E	460	2.8	70.0	2100	1.10	4	8.5	5.00	3000
1326AB-B420H	460	5.5	137.3	4120	2.20	4	15.6	5.10	6000
1326AB-B430E	460	3.9	67.7	2030	1.40	4	11.7	6.60	3000
1326AB-B430G	460	5.6	114.3	3430	2.30	4	16.8	6.40	5000
1326AB-B515E	460	6.1	70.3	2110	2.30	4	18.3	10.40	3000
1326AB-B515G	460	9.5	88.7	2660	2.90	4	28.5	10.40	5000
1326AB-B520E	460	6.7	71.0	2130	2.90	4	20.1	13.00	3000
1326AB-B520F	460	8.8	70.3	2110	2.90	4	26.4	13.10	3500
1326AB-B530E	460	9.5	74.3	2230	4.20	4	28.5	18.00	3000
1326AB-B720E	460	17.5	70.0	2100	6.80	4	52.5	30.90	3500
1326AB-B720F	460	27.5	117.0	3510	11.70	4	66.5	31.80	5000
1326AB-B730E	460	22.8	78.3	2350	9.60	4	66.5	39.00	3350
1326AB-B740C	460	20.9	52.3	1570	8.70	4	62.7	53.00	2200
1326AB-B740E	460	32.0	79.7	2390	12.70	4	66.5	50.80	3400
			0.0						
1326AS-B310H	460	0.8	204.5	4090	0.30	6	2.4	0.70	6200
1326AS-B330H	460	2.1	204.5	4090	0.90	6	6.0	2.10	6500
1326AS-B420G	460	2.6	179.0	3580	1.20	6	7.8	3.20	5250
1326AS-B440G	460	5.4	149.0	2980	2.00	6	16.2	6.40	5250
1326AS-B460F	460	6.2	148.5	2970	2.80	6	18.6	9.00	4300
1326AS-B630F	460	7.8	142.7	2140	2.40	8	18.5	10.70	4500
1326AS-B660E	460	11.8	100.7	1510	3.40	8	29.8	21.50	3000
1326AS-B690E	460	19.0	87.3	1310	5.00	8	41.3	36.40	3000
1326AS-B840E	460	21.2	79.3	1190	4.70	8	39.5	37.60	3000
1326AS-B860C	460	17.6	77.3	1160	6.00	8	44.4	49.30	2000
1326AH-B330F	460	2.1	0.0	3000	0.75		9.0		3000
1326AH-B440F	460	3.3	0.0	2500	1.22		13.8		2500
1326AH-B540F	460	11.1	0.0	2500	2.60		47.2		2500
3050R-7	390	66.0	50.0	500	30.00	12	132.0		500
11050R-7	390	218.0	50.0	500	110.00	12	436.0		500

A

AC Supply
  Source **1-3**
  Unbalanced **1-3**
  Ungrounded **1-3**
AC Supply Source Consideration **1-3**
Access **1-8**
  Transformer Tap **1-10**
Access Panel **1-8**
Access Panel Removal **1-8**
Ambient Operating Temperatures **1-3**
Ambient Temperature **1-3**
Armored Cable **1-6**
Assisted Start-Up **2-3**
Auxiliary Power Supply **1-20**

B

Before Applying Power **2-1**
Bipolar Inputs **1-19**
Bottom Plate Removal **1-8**
Bottom View Dimensions **A-27**
Brake Resistor **1-14**

C

Cable **1-8**
Cable Entry Plate
  Removal **1-8**
  SHLD Terminal **1-5**
Cable Length
  Motor **1-8**
Cable Trays **1-7**
Cables, Power
  Armored **1-6**
  Insulation **1-6**
  Separation **1-6**
  Shielded **1-6**
  Type **1-6**
  Unshielded **1-6**
Catalog Number Explanation **P-5**, **P-6**
CE
  Conformity **1-35**
Checklist, Start-Up **2-1**
Circuit Breaker Ratings **A-6**
Circuitry **1-21**
Clear
  Faults Manually **4-4**
Common Bus
  DC Input **1-10**
Common Mode Capacitors **1-16**
Common Mode Interference **1-19**
Communications
  Programmable Controller Configurations **A-4**
Compatible Motors
  Thermistor **A-17**
Conduit **1-7**
Control Assembly **1-2**
Control Block Diagrams **B-1**
Control Block Diagrams - Overview **B-2**
Control Logic **B-2**
Control Wire **1-19**
Conventions **P-3**
Cooling Fan Voltage **1-9**
cover
  removing **G-1**
  replacing **G-2**

D

Dimensions **A-19**
Dimensions Frame 1-3 **A-20**
Dimensions Frame 4 **A-21**
Dimensions Frame 5 **A-22**
Dimensions Frame 6 **A-23**
Distribution Systems
  Unbalanced **1-3**
  Ungrounded **1-3**
Documentation **P-2**
DPI Communication Configurations **A-4**
Drive Frame Sizes **P-3**
Drive Ratings **A-8**, **A-9**
Drive Status **4-1**
Dynamic Brake Resistor **1-14**

E

EMC
  Directive **1-35**
EMC Instructions **1-35**
EMI/RFI Filter Grounding, RFI Filter **1-5**

Enclosure Rating **1-3**

F

Fan Voltage **1-9**
Fault Descriptions **4-4**
Faults
  Manually Clear **4-4**
Faults and Alarms **4-1**
Filter, RFI **1-5**
Frame Sizes **P-3**
Fuse & Circuit Breaker Ratings **A-6**
Fuse Ratings **A-8**, **A-9**
Fuse Size **A-6**
Fuse Type **A-7**
Fuses **1-5**

G

General Precautions **P-4**
Grounding
  Filter **1-5**
  Shields **1-5**
Grounding Requirements **1-4**

H

Hard Enable Circuitry **1-21**
High Resolution (Stegmann)
  Specifications **E-1**
High Resolution Encoder Interface Board **A-18**
HIM **D-1**
  ALT Functions **D-2**
  External and Internal Connections **D-1**
  External Connections **D-1**
  Internal Connections **D-1**
  LCD Display Elements **D-2**
  Removing the HIM **D-3**
HIM Indication **4-4**
Hi-Resolution Encoder Feedback Option
  PowerFlex 700S **E-1**

I

I/O Wiring **1-19**
Input Phase Selection **1-9**
Input Power Conditioning **1-4**
Input/Output Contactors
  Using **1-15**
Inputs & Outputs - Analog **B-2**
Inputs & Outputs - Digital **B-2**
Installation **1-1**
Installation/Wiring
  Chapter 1 **1-1**
installing
  cover **G-2**
Inverter Overload IT **B-2**

J

Jumper Removal **1-16**

L

LED Indications **4-2**
Logic Command Word **A-5**
Logic Status Word **A-6**

M

Main Control Board **A-18**
  I/O Terminal Locations **1-20**
Main Control Board I/O Configuration Settings **1-32**
Manual Conventions **P-3**
Manually Clearing Faults **4-4**
Motor **1-8**
Motor Cable Lengths **1-8**
Motor Control Mode
  Field Oriented Control **C-2**
  Permanent Magnet Control **C-3**
Motor Control Technology **C-2**
Motor Ratings **A-17**
Mounting
  Clearances **1-2**
MOVs **1-16**

N

Non-Resettable **4-1**

O

Opening
  Cover **1-2**
Opening the Cover **1-2**

Operating Temperature **1-3**
Output Devices **A-6**
Overspeed **C-4**

P

Parameter
  By Name **3-96**
  Data **3-16**
  Linear List Format **3-16**
Parameters **3-1**
  About **3-1**
  Cross Reference **3-96**
  Organization **3-3**
  Programming **3-1**
Parameters, Groups
  Communication **3-4**
  Dynamic Control **3-3**
  Inputs & Outputs **3-4**
  Monitor **3-3**
  Motor Control **3-3**
  Position Control **3-4**
  Process Control **3-3**
  Speed Control **3-3**
  Speed/Posit Fdbk **3-4**
  SynchLink **3-4**
  Torque Control **3-3**
  Utility **3-4**
Peak Detector **B-2**
Permanent Magnet Motor Specifications **I-1**
Permanent Magnet Motors
  Compatible Motors **I-1**
  Motor Name Plate and Rating Specifications **I-1**
Position Control - Auxiliary **B-2**
Position Control - Interpolated/Direct **B-2**
Position Control - Point to Point **B-2**
Power **1-8**
Power Conditioning, Input **1-4**
Power Supply
  Auxiliary **1-20**
Power Terminal Block **1-8**
Power Wiring **1-6**
  Access Panel **1-8**
  General **1-8**
Powering Up the Drive **2-1**
Process Control **B-2**
Programmable Controller Configurations **A-4**

R

Recommended **1-19**, **E-3**
Recommended Cables
  Cables **E-3**
Recommended Documentation **P-2**
Removal **1-8**
  Access Panel **1-8**
removing
  cover **G-1**
replacing
  cover **G-2**
Resolver Interface Board **A-18**

S

Selecting/Verifying Fan Voltage **1-9**
Shielded Cables
  Power **1-6**
SHLD Terminal **1-5**
Signal Wire **1-19**
Spare Connectors **A-18**, **F-1**
Specifications **A-1**
Speed Control - Reference **B-2**
Speed Control - Regulator **B-2**
Speed/Position Feedback **B-2**
Start-Up **2-1**
  Assisted **2-3**
  Checklist **2-1**
Stegmann High Resolution **E-1**
  Support Encoders **E-1**
Stegmann Hi-Resolution
  Connection Examples **E-3**
Stegmann Hi-Resolution Specifications **E-1**
Supplemental Information **A-1**
Supply Source **1-3**
SynchLink **1-33**
SynchLink Cables and Connector Parts **A-19**

T

TB1 - Row B (Bottom) Terminals **1-24**
TB1 - Row T (Top) Terminals **1-21**
TB2 - Row B (Bottom) Terminals **1-30**
TB2 - Row T (Top) Terminals **1-26**
Terminal Block **1-8**
  Wire Size

Power **1-11**
Thermistor Ratings **A-17**
Torque Control **B-2**
Transformer Tap Access **1-10**

U

Unbalanced/Ungrounded Supply **1-3**
Ungrounded Distribution Systems **1-16**
Unshielded Power Cables **1-6**

W

Web Sites, see *WWW, World Wide Web*
Wire
Signal **1-19**
Wiring
Access Panel Removal **1-8**
Cable Entry Plate Removal **1-8**
Power **1-6**
Wiring Examples
TB1 - Row B (Bottom) **1-25**
TB1 - Row T (Top) **1-22**
TB2 - Row R (Top) **1-27**
WWW, World Wide Web **P-1**

Rockwell Automation Support

Rockwell Automation provides technical information on the Web to assist you in using its products. At http://www.rockwellautomation.com/support you can find technical and application notes, sample code, and links to software service packs. You can also visit our Support Center at https://rockwellautomation.custhelp.com/ for software updates, support chats and forums, technical information, FAQs, and to sign up for product notification updates.

In addition, we offer multiple support programs for installation, configuration, and troubleshooting. For more information, contact your local distributor or Rockwell Automation representative, or visit http://www.rockwellautomation.com/services/online-phone.

Installation Assistance

If you experience a problem within the first 24 hours of installation, review the information that is contained in this manual. You can contact Customer Support for initial help in getting your product up and running.

United States or Canada	1.440.646.3434
Outside United States or Canada	Use the Worldwide Locator at http://www.rockwellautomation.com/rockwellautomation/support/overview.page, or contact your local Rockwell Automation representative.

New Product Satisfaction Return

Rockwell Automation tests all of its products to help ensure that they are fully operational when shipped from the manufacturing facility. However, if your product is not functioning and needs to be returned, follow these procedures.

United States	Contact your distributor. You must provide a Customer Support case number (call the phone number above to obtain one) to your distributor to complete the return process.
Outside United States	Please contact your local Rockwell Automation representative for the return procedure.

Documentation Feedback

Your comments will help us serve your documentation needs better. If you have any suggestions on how to improve this document, complete this form, publication RA-DU002, available at http://www.rockwellautomation.com/literature/.

Rockwell Otomasyon Ticaret A.Ş., Kar Plaza İş Merkezi E Blok Kat:6 34752 İçerenköy, İstanbul, Tel: +90 (216) 5698400

www.rockwellautomation.com

Power, Control and Information Solutions Headquarters

Americas: Rockwell Automation, 1201 South Second Street, Milwaukee, WI 53204-2496 USA, Tel: (1) 414.382.2000, Fax: (1) 414.382.4444
Europe/Middle East/Africa: Rockwell Automation NV, Pegasus Park, De Kleetlaan 12a, 1831 Diegem, Belgium, Tel: (32) 2 663 0600, Fax: (32) 2 663 0640
Asia Pacific: Rockwell Automation, Level 14, Core F, Cyberport 3, 100 Cyberport Road, Hong Kong, Tel: (852) 2887 4788, Fax: (852) 2508 1846

Publication 20D-UM001G-EN-P - August 2013
Supersedes Publication 20D-UM001F-EN-P - October 2005

Copyright © 2013 Rockwell Automation, Inc. All rights reserved. Printed in the U.S.A.