**Technical Data**

Original Instructions

# Signaling Specifications

Bulletin Numbers 854J, 854K, 855B, 855BS/BM/BL, 855D, 855E, 855F, 855H/HM, 855L, 855P, 855T, 855W, 855X/XM, 856T


| Topic | Page |
|---|---|
| Summary of Changes | 2 |
| Bulletin 855P – Panel-mount Signaling Alarms | 3 |
| Bulletin 855L – Panel Light Bars | 9 |
| Bulletin 855H – General-purpose Electronic Horns | 11 |
| Bulletin 855H – High-performance Electronic Horns | 12 |
| Bulletin 855H – Recordable Electronic Horns | 19 |
| Bulletin 855HM – High-performance Electronic Metal Horns | 23 |
| Bulletin 855B – Mini Square Beacons | 28 |
| Bulletin 855B – Industrial Round Beacons | 30 |
| Bulletin 855D – 30 mm Compact Control Tower Stack Lights | 39 |

| Topic | Page |
|---|---|
| Bulletin 855F – 70 mm Compact Control Tower Stack Lights | 44 |
| Bulletin 854J – 40 mm Control Tower Stack Lights | 49 |
| Bulletin 854K – 60 mm Control Tower Stack Lights | 58 |
| Bulletin 855E – 50 mm Control Tower Stack Lights | 67 |
| Bulletin 855T – 70 mm Control Tower Stack Lights | 75 |
| Bulletin 856T – 70 mm Control Tower Stack Lights | 89 |
| Bulletin 855W – Wall-mount Signal Light | 101 |
| Bulletin 855X – Hazardous Location Horns, Beacons, and Combination Units | 105 |
| Bulletin 855XM – Hazardous Location Metal Horns | 113 |
| Additional Resources | 121 |


Our signaling devices are available in two types:

- Audible Devices
  Including general and high-performance electronic horns, panel mount signaling alarms, and hazardous location horns and beacons.
- Visual Devices
  Including panel mount xenon strobes, mini square beacons, panel-mount with selectable steady or flashing light indicators, wall-mount signal lights, panel light bars, industrial round beacons, tower lights, stack lights, and panel-mount dual circuit alarms.

Our signaling devices are designed for fast, flexible, and easy installation to save you time with advanced modular assembly and unparalleled performance and reliability.

# Summary of Changes

This publication contains the following new or updated information. This list includes substantive updates only and is not intended to reflect all changes.

| Topic | Page |
|---|---|
| Added recordable sounder to Sound Modules section. | 90 |
| Added IO-Link Module section. | 91 |
| Updated Pre-configured Control Tower Lights, 1...7 Modules section. | 93 |
| Updated Table 125. | 94 |
| Updated Table 127. | 95 |
| Updated Table 128. | 95 |
| Added Table 129. | 95 |
| Updated Table 131. | 96 |
| Updated Table 132. | 97 |
| Updated Table 133. | 97 |
| Added Figure 15. | 99 |
| Added recordable sound module to Figure 17. | 100 |

This product line includes sounders, status indicator beacons, xenon strobes, and sounders with status indicator combination and dual-circuit alarms. These alarms significantly reduce panel space requirements and installation time. Our panel-mount alarms are rear-securing and fingersafe, which adds a high level of environmental integrity to your panel.

## Bulletin 855P — Panel-mount Sounder

30 mm Panel-mount Sounder

45 mm Panel-mount Sounder

65 mm Panel-mount Sounder

| 855P | - | B | 10 | ME | 22 |
|---|---|---|---|---|---|
| | | a | b | c | d |

| a | |
|---|---|
| Housing Color | |
| Code | Description |
| B | Black |

| b | |
|---|---|
| Voltage | |
| Code | Description |
| 30 | 12...24V AC/DC |
| 10 | 120V AC |
| 20 | 240V AC |

| c | |
|---|---|
| Size | |
| Code | Description |
| SE | 30 mm, fully enclosed, smooth front, 72 dB |
| SH | 30 mm, high output, 80 dB |
| ME | 45 mm |
| LE | 65 mm |

| d | |
|---|---|
| Mounting Hole | |
| Code | Description |
| 22 | 22.5 mm |

## Bulletin 855PC — Panel-mount Combined Sounder with LED Beacon

45 mm Panel-mount Combined Sounder with LED (Light-emitting Diode) Beacon

65 mm Panel-mount Combined Sounder with LED Beacon

| 855PC | - | B | 10 | ME | 3 | 22 |
|---|---|---|---|---|---|---|
| | | a | b | c | d | e |

| a | |
|---|---|
| Housing Color | |
| Code | Description |
| B | Black |

| b | |
|---|---|
| Voltage | |
| Code | Description |
| 12 | 12V AC/DC |
| 24 | 24V AC/DC |
| 10 | 120V AC |
| 20 | 240V AC |

| c | |
|---|---|
| Size | |
| Code | Description |
| ME | 45 mm |
| LE | 65 mm |

| d | |
|---|---|
| Lens Color | |
| Code | Description |
| 3 | Green |
| 4 | Red |
| 5 | Amber |
| 6 | Blue |
| 7 | Clear |
| 8 | Yellow |

| e | |
|---|---|
| Mounting Hole | |
| Code | Description |
| 22 | 22.5 mm |

# Bulletin 855PS — Panel-mount Strobe

30 mm Panel-mount Strobe

45 mm Panel-mount Strobe

65 mm Panel-mount Strobe

| 855PS | - | B | 10 | ME | 3 | 22 |
|---|---|---|---|---|---|---|
| | | a | b | c | d | e |

| a | |
|---|---|
| **Housing Color** | |
| **Code** | **Description** |
| B | Black |

| b | |
|---|---|
| **Voltage** | |
| **Code** | **Description** |
| 12 | 12V AC/DC |
| 24 | 24V AC/DC |
| 10 | 120V AC |
| 20 | 240V AC |
| 30 | 12...24V AC/DC |

| c | |
|---|---|
| **Size** | |
| **Code** | **Description** |
| SE | 30 mm (1) (2) |
| ME | 45 mm (3) (4) |
| LE | 65 mm (3) (4) |

| d | |
|---|---|
| **Lens Color** | |
| **Code** | **Description** |
| 3 | Green |
| 4 | Red |
| 5 | Amber |
| 6 | Blue |
| 7 | Clear |
| 8 | Yellow |

| e | |
|---|---|
| **Mounting Hole** | |
| **Code** | **Description** |
| 22 | 22.5 mm |

(1) 30 mm units are LED type.
(2) Only available in 12V AC/DC, 24V AC/DC, 120V AC, or 240V AC.
(3) 45 mm and 65 mm units are Xenon strobe.
(4) Only available in 12...24V AC/DC, 120V, or 240V AC.

# Bulletin 855PB — Panel-mount Selectable Steady or Flashing LED Beacon

30 mm Panel-mount LED Beacon

45 mm Panel-mount LED Beacon

65 mm Panel-mount LED Beacon

| 855PB | - | B | 10 | ME | 3 | 22 |
|---|---|---|---|---|---|---|
| | | a | b | c | d | e |

| a | |
|---|---|
| **Housing Color** | |
| **Code** | **Description** |
| B | Black |

| b | |
|---|---|
| **Voltage** | |
| **Code** | **Description** |
| 12 | 12V AC/DC |
| 24 | 24V AC/DC |
| 10 | 120V AC |
| 20 | 240V AC |

| c | |
|---|---|
| **Size** | |
| **Code** | **Description** |
| SE | 30 mm |
| ME | 45 mm |
| LE | 65 mm |

| d | |
|---|---|
| **Lens Color** | |
| **Code** | **Description** |
| 3 | Green |
| 4 | Red |
| 5 | Amber |
| 6 | Blue |
| 7 | Clear |
| 8 | Yellow |

| e | |
|---|---|
| **Mounting Hole** | |
| **Code** | **Description** |
| 22 | 22.5 mm |

# Bulletin 855PD — Panel-mount Dual-circuit Alarms

Half-lens Illumination

Full-lens Illumination

Combined Sounder with LED Beacon

| 855PD | - | B | 24 | ME | F | 3 | 4 | 22 |
|---|---|---|---|---|---|---|---|---|
| | | a | b | c | d | e | f | g |

| a | |
|---|---|
| **Housing Color** | |
| **Code** | **Description** |
| B | Black |

| b | |
|---|---|
| **Voltage** | |
| **Code** | **Description** |
| 12 (1) | 12V AC/DC |
| 24 | 24V AC/DC |
| 10 | 120V AC |
| 20 | 240V AC |

| c | |
|---|---|
| **Size** | |
| **Code** | **Description** |
| SE | 30 mm (2) (3) |
| ME | 45 mm |
| LE | 65 mm |

| d | |
|---|---|
| **Function** | |
| **Code** | **Description** |
| F | Two-color, full-lens illumination |
| H | Two-color, half-lens illumination with barrier |
| C | Combined sounder with LED beacon (3) |

(1) Voltage code 12 is only valid for sounder with LED devices.
(2) 30 mm available in 24V AC/DC only, for 2-color versions.
(3) The sounder with LED is not available in the 30 mm size.

| e | |
|---|---|
| **LED Color (1)/Sound** | |
| **Code** | **Description** |
| 1 | Sound |
| 3 | Green |
| 4 | Red |
| 5 | Amber |
| 6 | Blue |
| 7 | Clear |
| 8 | Yellow |

| f | |
|---|---|
| **LED Color (2)** | |
| **Code** | **Description** |
| 3 | Green |
| 4 | Red |
| 5 | Amber (3) |
| 6 | Blue |
| 7 | Clear |
| 8 | Yellow (3) |

| g | |
|---|---|
| **Mounting Hole** | |
| **Code** | **Description** |
| 22 | 22.5 mm |

(1) Voltage code 12 is only valid for sounder with LED devices.
(2) For two-color devices, the first color code listed in the catalog number corresponds to the same side as the panel tab found on the housing. For example: catalog number 855PD-B24MEH4322 indicates that the red color is on the same side as the panel tab and the green color is on the opposite side as the panel tab.
(3) The color combination of yellow and amber is not allowed because of their similarity

# Accessories

| Description | Cat. No. |
|---|---|
| 22.5...30.5 mm hole adapter kit | 855P-AHA1 |

# Specifications

### Table 1 - Standards and Certifications

| Attribute | Bulletin 855P |
|---|---|
| Standards Compliance | • EN/IEC 60947-1<br>• EN/IEC 60947-5-1<br>• UL 508<br>• CSA C22.2 No. 14 |
| Certifications | • c-UL-us Listed (File No. E14840, Guides NKCR, NKCR7)<br>• CE Marked |

## Panel Sounder and Single-/Dual-circuit Panel Sounder with LED

### Table 2 - Technical

| Attribute | | Bulletin 855P |
|---|---|---|
| Housing | Base Material | Polycarbonate, black |
| | Lens | Polycarbonate, red, amber, yellow, green, blue, and clear |
| Protection class | | UL Type 4/4X/13, IP65 |
| Terminals | | Plug-in terminal block, up to 2.5 $mm^2$ (14 AWG), IP2X |
| Operation temperature range | | -25...+60 °C (-13...+140 °F) |
| Storage temperature range | | -25...+85 °C (-13...+185 °F) |
| Mounting | | Central mounting for bore holes 22 mm or 30.5 mm with hole adapter kit (catalog number 855P-AHA1) |
| Mounting nut torque | | 1.7 N•m (15 lb•in) |

### Table 3 - Electrical

| Attribute | | Sounder | | | Sounder with Warning Light | |
|---|---|---|---|---|---|---|
| | | 65 mm | 45 mm | 30 mm | 65 mm | 45 mm |
| Supply voltage range | 12V AC/DC - 50/60 Hz | — | — | — | ±10% | ±10% |
| | 24V AC/DC - 50/60 Hz | — | — | — | ±10% | ±10% |
| | 12...24V AC/DC - 50/60 Hz | 8...26V AC/DC | 8...26V AC/DC | 10...26V AC/DC | — | — |
| | 120V AC - 50/60 Hz | 50...140V AC | 50...140V AC | 80...140V AC | ±10% | ±10% |
| | 230/240V AC - 50/60 Hz | 150...260V AC | 150...260V AC | 180...260V AC | ±10% | ±10% |
| Nominal current — single circuit (dual circuit) | 12V AC/DC - 50/60 Hz | — | — | — | 50 mA (62 mA) | 35 mA (48 mA) |
| | 24V AC/DC - 50/60 Hz | 57 mA | 20 mA | 20 mA | 73 mA (95 mA) | 58 mA (73 mA) |
| | 120V AC - 50/60 Hz | 40 mA | 40 mA | 20 mA | 60 mA (52 mA) | 40 mA (51 mA) |
| | 230/240V AC - 50/60 Hz | 42 mA | 42 mA | 20 mA | 63 mA (52 mA) | 42 mA (51 mA) |
| Turn-on leakage current | | ≥3 mA | ≥3 mA | ≥3 mA | ≥3 mA | ≥3 mA |
| Sound level, max (average) | | 105 dB(A) @ 1 m (3.3 ft) | 100 dB(A) @ 1 m (3.3 ft) | SE: 72 dB(A) @ 1 m (3.3 ft) SH: 80 dB(A) @ 1 m (3.3 ft) | 103 dB(A) @ 1 m (3.3 ft) | 98 dB(A) @ 1 m (3.3 ft) |
| Sound level, min | | < 85 dB | < 85 dB | — | < 85 dB | < 85 dB |
| Sound level adjustment | | Stepless | Stepless | — | Stepless | Stepless |
| Sound main frequency | | 3300 Hz | 3300 Hz | 3500 Hz | 3300 Hz | 3300 Hz |
| Sound types | Continuous | Yes | Yes | Yes | Yes | Yes |
| | Pulsing(1) | Yes | Yes | Yes | Yes | Yes |
| | Alternating frequency(1) | Yes | No | No | Yes | No |
| Sound selection | | Externally by terminal connection | | | | |
| Weight | | 65 g (2.3 oz) | 35 g (1.2 oz) | 25 g (0.9 oz) | 85 g (3 oz) | 55 g (1.9 oz) |

(1) Single circuit only.

# Panel Strobe and Single/Two Color LED Lights

## Table 4 - Technical

| Attribute | | Bulletin 855P |
|---|---|---|
| Housing | Base material | Polycarbonate, black |
| | Lens | Polycarbonate, red, amber, yellow, green, blue, and clear |
| Protection class | | UL Type 4/4X/13, IP2X, IP65 |
| Terminals | | Plug-in terminal block, up to 2.5 $mm^2$ (14 AWG), IP2X fingersafe |
| Operation temperature range | | -25...+60 °C (-13...+140 °F) |
| Storage temperature range | | -25...+85 °C (-13...+185 °F) |
| Mounting | | Central mounting for bore holes 22 mm or 30.5 mm with hole adapter kit (Cat. No. 855P-AHA1) |
| Mounting nut torque | | 1.7 N•m (15 lb•in) |

## Table 5 - Electrical

| Attribute | | LED Beacon — Steady/Flashing | | | Strobe Light | | |
|---|---|---|---|---|---|---|---|
| | | 65 mm | 45 mm | 30 mm | 65 mm | 45 mm | 30 mm |
| Supply voltage range | 12V AC/DC, 50/60 Hz | ±10% | ±10% | ±10% | — | — | ±10% |
| | 24V AC/DC, 50/60 Hz | ±10% | ±10% | ±10% | — | — | ±10% |
| | 12...24V AC/DC, 50/60 Hz | — | — | — | 8...26V AC/DC | 8...26V AC/DC | — |
| | 120V AC, 50/60 Hz | ±10% | ±10% | ±10% | ±10% | ±10% | ±10% |
| | 230/240V AC, 50/60 Hz | ±10% | ±10% | ±10% | ±10% | ±10% | ±10% |
| Nominal current — single circuit (dual circuit) | 12V AC/DC, 50/60 Hz | 75 mA | 60 mA | 30 mA | — | — | 15 mA |
| | 24V AC/DC, 50/60 Hz | 54 mA (full: 71 mA half: 44 mA) | 35 mA (full: 46 mA half: 39 mA) | 25 mA (full: 28 mA half: 30 mA) | — | — | 10 mA |
| | 12...24V AC/DC, 50/60 Hz @ 12V | — | — | — | 150 mA | 110 mA | — |
| | 12...24V AC/DC, 50/60 Hz @ 24V | — | — | — | 140 mA | 100 mA | — |
| | 120V AC, 50/60 Hz | 25 mA (full: 61 mA half: 41 mA) | 25 mA (full: 35 mA half: 35 mA) | 20 mA | 30 mA | 20 mA | 10 mA |
| | 230/240V AC, 50/60 Hz | 25 mA (full: 61 mA half: 41 mA) | 25 mA (full: 35 mA half: 34 mA) | 20 mA | 20 mA | 12 mA | 10 mA |
| Turn-on leakage current | | ≥3 mA | ≥3 mA | ≥3 mA | ≥3 mA | ≥3 mA | ≥3 mA |
| Steady/Flashing light | | Externally by terminal connection | | | — | — | — |
| Flashing frequency | | 2 Hz | 2 Hz | 2 Hz | 1.4 Hz (min) | 1.4 Hz (min) | 1.4 Hz (min) |
| Light source | | LED | | | Xenon tube | | LED |
| Flash energy | | — | — | — | 1 J | 1.5 J | — |
| Weight | | 60 g (2.1 oz) | 40 g (1.4 oz) | 40 g (1.4 oz) | 80 g (2.8 oz) | 60 g (2.1 oz) | 40 g (1.4 oz) |

# Approximate Dimensions

Dimensions in millimeters (inches). Dimensions are not intended to be used for manufacturing purposes.

Terminal connector for 30 mm devices adds 14 mm (0.55 in.) to back-of-panel depth
Terminal connector for 45 mm and 65 mm devices adds 9 mm (0.35 in.) to back-of-panel depth

30 mm Sounder

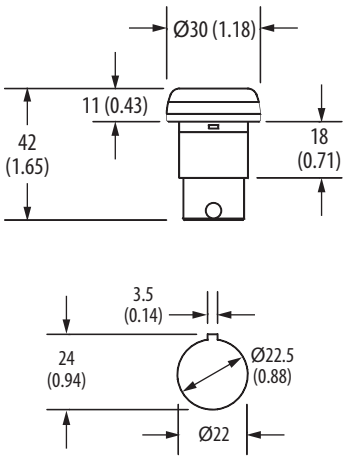


45 mm Sounder

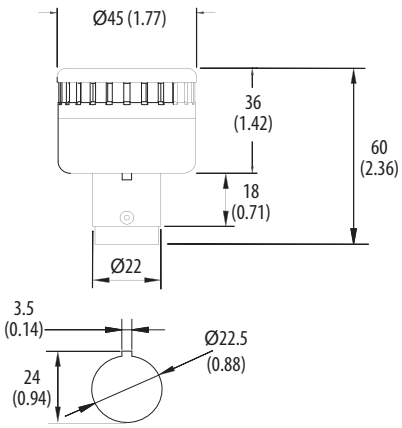


65 mm Sounder

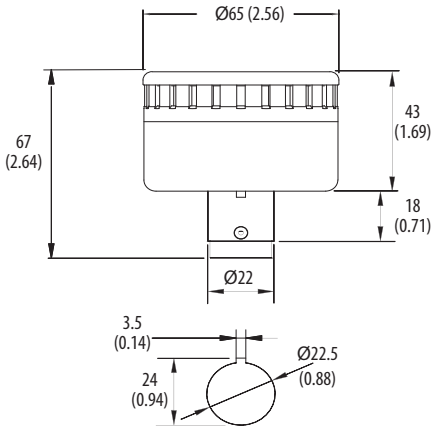


45 mm Combined Sounder with LED Beacon

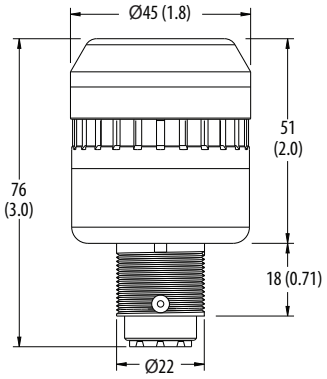


65 mm Combined Sounder with LED Beacon

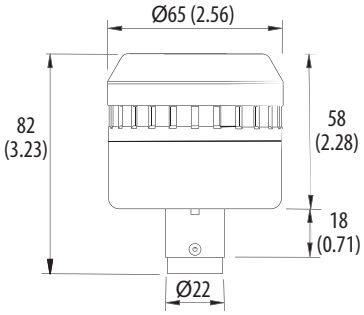


30 mm LED
30 mm Strobe

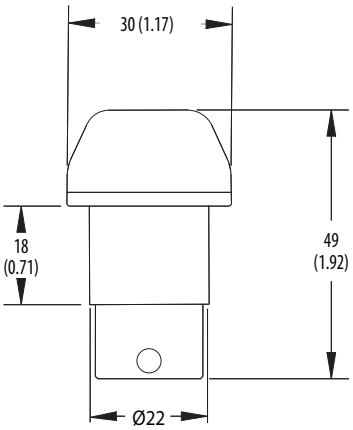


45 mm LED
45 mm Strobe

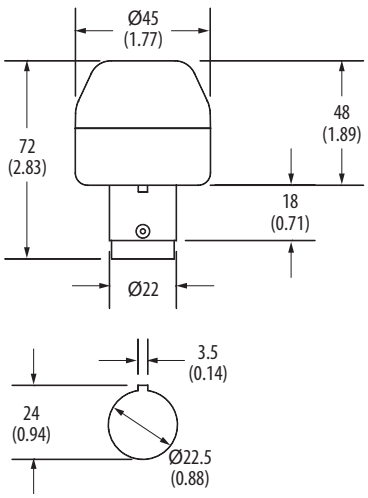


65 mm LED
65 mm Strobe

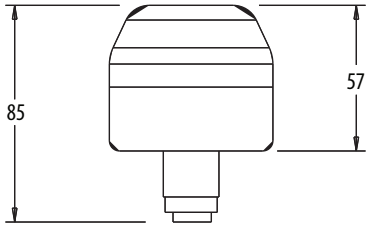

These panel light bars are ideal for OEMs and panel builders who want to reduce the quantity of components without the loss of design reliability or functionality. These devices remove your need for a separate fluorescent lamps purchase. They can be left ON continuously due to low power consumption and minimum heat generation of modern status indicator technology.

## Specifications

Cat. No. 855L-NX1

Cat. No. 855L-NX4

| Attribute | 855L-NX1 (24...48V with ON/OFF Switch)<br>855L-NX2 (24...48V - No Switch) | 855L-NX3 (110...240V with ON/OFF Switch)<br>855L-NX4 (110...240V - No Switch) |
|---|---|---|
| Nominal Input Voltage | 24...48V AC/DC, 50/60 Hz | 855L-NX3: 110...240V AC, 50/60 Hz<br>855L-NX4: 110...240V AC/DC, 50/60 Hz |
| Input Voltage Limits | 17...63V DC<br>17...53V AC, 50/60 Hz | 90...320V DC (855L-NX4 only)<br>90...250V AC, 50/60 Hz |
| Nominal Current | ~300 mA @ 24V DC/ ~150 mA @ 48V DC | <70 mA @ 120V AC/ <55 mA @ 240V AC |
| Inrush Current | 1 A @ 24V DC, ~2 A @ 48V DC, 25 °C (77 °F) | ~3.5 A @ 120V AC/ ~7 A @ 240V AC |
| Leakage Current Immunity | >8 mA DC | >3 mA AC/~1 mA DC |
| Ingress Protection | 855L-NX1: NEMA 1, IP40<br>855L-NX2: NEMA 1, IP44 | 855L-NX3: NEMA 1, IP40<br>855L-NX4: NEMA 1, IP44 |
| Operating Temperature Range | -35...+60 °C (-31...+140 °F) | |
| Storage Temperature Range | -35...+85 °C (-31...+185 °F) | |
| Wire Size | 22...14 AWG (0.5...2.5 $mm^2$) | |
| Light Beam Angle | ~70° | |
| LED Color | White | |
| Light Output, min | 470 lumens | |
| Lens Material | Polycarbonate (clear) | |
| Base Material | Polycarbonate (light gray) | |
| Mounting Orientation | No restrictions | |
| Mounting Screws (not provided) | 2 X 1/4 in. (M5/ M6) | |
| Weight | 380 g (<1 lb) | |
| LED MTFB | 50,000 hr | |

### Table 6 - Standards and Certifications

| Attribute | Bulletin 855L |
|---|---|
| Standards Compliance | • EN61000-6-2<br>• EN61000-6-3<br>• EN60947-5-1 |
| Certifications | • CE Marked<br>• c-UL-us File No. E14840 |

# Approximate Dimensions

Dimensions in millimeters (inches). Dimensions are not intended to be used for manufacturing purposes.

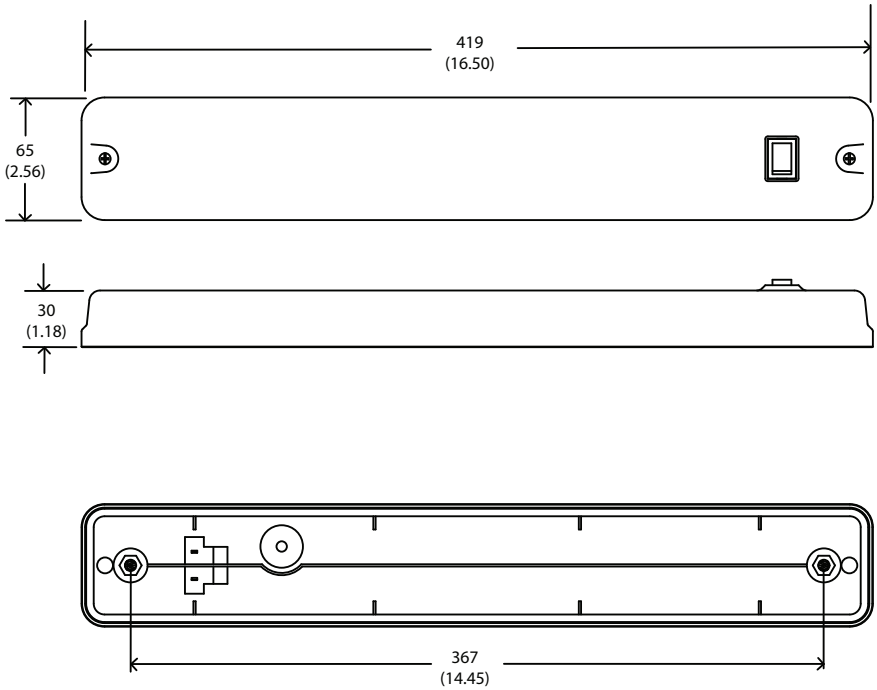

This product line includes general-purpose, high-performance, and recordable electronic horns.

## Bulletin 855H — General-purpose Electronic Horns

These devices produce a sound output of 108 dB (A) maximum, which is suitable for most mid-range industrial and institutional, single-status signaling applications. The enhanced version produces sound output of 113 dB (A) max. Our horns have multi-tone and volume control capabilities. You can retrofit the horns directly into most machine panel cutouts or mount them into traditional 10.2 cm (4 in.) electrical back boxes.

| 855H | - | SG | 10 | GPA |
|---|---|---|---|---|
| | | a | b | c |

| a | |
|---|---|
| **Mounting Type** | |
| **Code** | **Description** |
| FG | Semi-flush wall plate, gray housing |
| SG | Surface base with two conduit entrances, gray housing |

| b | |
|---|---|
| **Voltage** | |
| **Code** | **Description** |
| 24 | 24V AC/DC |
| 10 | 120V AC |
| 20 | 240V AC |
| 30 | 10...30V DC |
| 45 | 40...260V AC/DC, 50/60 Hz |

| c | |
|---|---|
| **Horn Type** | |
| **Code** | **Description** |
| GPA (1) | General-purpose, 108 dB(A) max, single stage/circuit, three tones |
| GPE (2) | Enhanced version, 113 dB(A) max @ 1 m (3.3 ft), two stage, three tones, volume control |

(1) Not valid with voltage codes 30 and 45 (Table b).
(2) Not valid with mounting type FG (Table a) or with voltage codes 24, 10, and 20 (Table b).

## Accessories

| | Description | Cat. No. |
|---|---|---|
| | M20 hole plug replacement kit (1) | 855H-AHPK |

(1) For use with mounting type SG only.

## Specifications

### Table 7 - Environmental

| Attribute | | Value |
|---|---|---|
| Ingress Ratings | Semi-flush Mount | UL Type 3R/13, IP54 |
| | Surface Mount | UL Type 4/4X/13/3R, IP66 |
| Temperature Ranges | Operating | -25...+55 °C (-13...+131 °F) |
| | Storage | -40...+70 °C (-40...+158 °F) |

### Table 8 - Materials

| Part | Material |
|---|---|
| Housings including horn cover and base | Polycarbonate |
| O-ring | NBR |
| Gasket (mounting type FG) | EPDM/SBR closed-cell foam |

### Table 9 - Performance Ratings

| Attribute | | Performance Rating |
|---|---|---|
| Sound Output | Standard (GPA) | 105±3 dB(A) @ 1 m (3.3 ft) |
| | Enhanced (GPE) | 110±3 dB(A) @ 1 m (3.3 ft) |

### Table 10 - Operating Voltage and Currents

| Attribute | Horn Type | DC Voltage | AC Voltage | | |
|---|---|---|---|---|---|
| Input Voltage Ranges | Standard (GPA) | 24V DC (±25%) | 24V AC, 50/60 Hz (±10%) | 120V AC, 50/60 Hz (±10%) | 240V AC, 50/60 Hz (±10%) |
| | Enhanced (GPE) | 10...30V DC | 40...260V AC/DC | | |
| Input Currents @ Nominal Voltage | Standard (GPA) | 62 mA | 220 mA | 40 mA | 50 mA |
| | Enhanced (GPE) | 105 mA | — | 36 mA | 18 mA |

### Table 11 - Standards and Certifications

| Attribute | Bulletin 855H — General-purpose Electronic Horns |
|---|---|
| Standards Compliance | • UL 464<br>• CSA C22.2 No. 205<br>• EN/IEC 60947-1<br>• EN/IEC 60947-5-1<br>• EN 6100-6-2<br>• EN 6100-6-3 |
| Certifications | • c-UL-us Listed (File No. S6583, Guides UCST, UCST7)<br>• CE Marked |

## Approximate Dimensions

Dimensions in millimeters (inches). Dimensions are not intended to be used for manufacturing purposes.

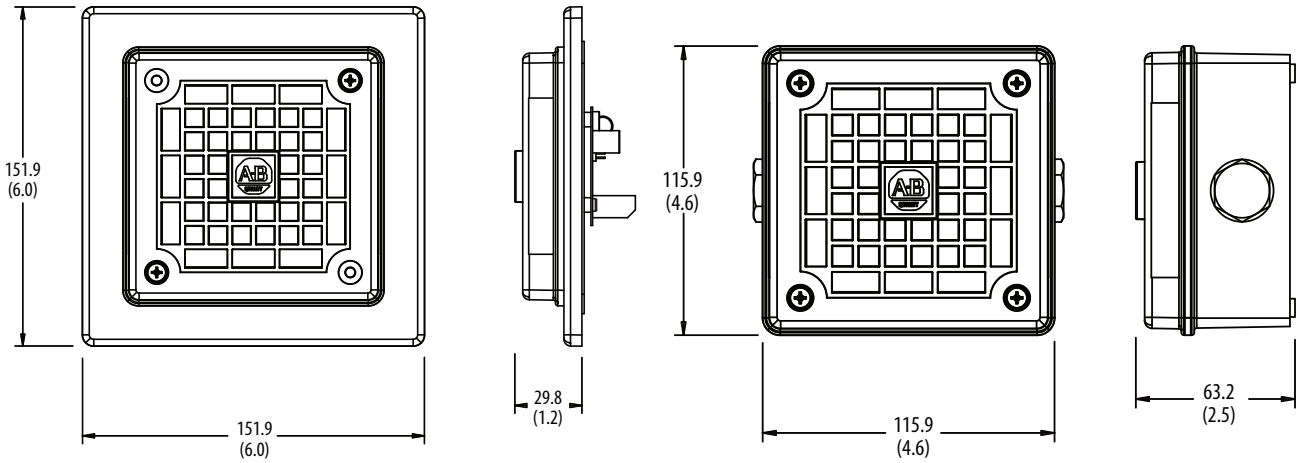


Semi-flush Mount

Surface Mount

## Bulletin 855H — High-performance Electronic Horns

These devices are available as a standalone electronic horn or with beacon. They are available in plastic or marine-grade aluminum housing.

- 24V DC, 120V AC, and 240V AC
- IP66 enclosure rating
- Square xenon tube illumination available in six colors
- UV-stable plastic enclosure. UL Type 13/3R, IP66 (Frames A, B, D), c-UL-us Type 4/4X/13/3R (Frames C and E)
- Output/Tones:
  - Frame A: 100dB/10 tones (1 or 2 stages)
  - Frame B: 104 dB/32 tones (3 stages)
  - Frame C: 112 dB/32 tones (3 stages)
  - Frame D: 119 dB/45 tones (3 stages)
  - Frame E: 126 dB/45 tones (3 stages)

## High-performance Electronic Horns

Range "A" Industrial Horn

Range "C" Industrial Horn

Range "E" Industrial Horn

| 855H | - | B | D30 | B | D |
|---|---|---|---|---|---|
| | | a | b | c | d |

| a | |
|---|---|
| **Product Type** | |
| **Code** | **Description** |
| B | Industrial horn, gray housing |

| b | |
|---|---|
| **Voltage** | |
| **Code** | **Description** |
| D30 | 10...30V DC |
| A24 | 24V AC, 50/60 Hz |
| A10 | 115V AC, 50/60 Hz |
| A20 | 230V AC, 50/60 Hz |

| c | |
|---|---|
| **Horn Type** | |
| **Code** | **Description** |
| A | 100 dB, 10 tone, 2-stage (DC) |
| | 100 dB, 10 tone, 1-stage (AC) |
| B | 104 dB, 32 tone, 3-stage (DC) |
| | 104 dB, 32 tone, 3-stage (AC) |
| C | 112 dB, 32 tone, 3-stage (DC) |
| | 112 dB, 32 tone, 3-stage (AC) |
| D | 119 dB, 45 tone, 3-stage (DC) |
| | 119 dB, 45 tone, 3-stage (AC) |
| E | 126 dB, 45 tone, 3-stage (DC) |
| | 126 dB, 45 tone, 3-stage (AC) |

| d | |
|---|---|
| **Mount Option** | |
| **Code** | **Description** |
| D | Standard base for surface or on-the-wall mounting with conduit openings and hole plugs |

# High-performance Electronic Horns with Attached Strobe Beacons

Range "A" Horn with Beacon

Range "C" Horn with Beacon

Range "E" Horn with Beacon

| 855H | - | BC | D12 | E | D | R | 3 |
|---|---|---|---|---|---|---|---|
| | | a | b | c | d | e | f |

| a | |
|---|---|
| **Product Type** | |
| **Code** | **Description** |
| BC | Electronic horn with Xenon strobe beacon, gray housing |

| b | |
|---|---|
| **Voltage** | |
| **Code** | **Description** |
| D12 | 12V DC |
| D24 | 24V DC |
| A24 | 24V AC, 50/60 Hz |
| A10 | 115V AC, 50/60 Hz |
| A20 | 230V AC, 50/60 Hz |

| c | |
|---|---|
| **Horn Type** | |
| **Code** | **Description** |
| A | 100 dB, 10 tone, 2-stage (DC) |
| | 100 dB, 10 tone, 1-stage (AC) |
| B | 104 dB, 32 tone, 3-stage (DC) |
| | 104 dB, 32 tone, 3-stage (AC) |
| C | 112 dB, 32 tone, 3-stage (DC) |
| | 112 dB, 32 tone, 3-stage (AC) |
| D | 119 dB, 45 tone, 3-stage (DC) |
| | 119 dB, 45 tone, 3-stage (AC) |
| E | 126 dB, 45 tone, 3-stage (DC) |
| | 126 dB, 45 tone, 3-stage (AC) |

| d | |
|---|---|
| **Mount Option** | |
| **Code** | **Description** |
| D | Standard base for surface or on-the-wall mounting with conduit openings and hole plugs |

| e | |
|---|---|
| **Illuminated Function** | |
| **Code** | **Description** |
| R | 5 J strobe |

| f | |
|---|---|
| **Lens Color** | |
| **Code** | **Description** |
| 3 | Green |
| 4 | Red |
| 5 | Amber |
| 6 | Blue |
| 7 | Clear |
| 8 | Yellow |

# Accessories

| | Description | | Cat. No. |
|---|---|---|---|
| | M20 hole plug replacement kit | | 855H-AHPK |
| 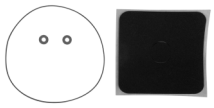 | **Description** | **Type** | **Cat. No.** |
| | Gasket set replacement kit | Range A, B, and beacon light | 855H-AGKBAB |
| | | Range C horn | 855H-AGKC |
| | | Range D horn | 855H-AGKD |
| | | Range E horn | 855H-AGKE |
| | **Description** | **Color** | **Cat. No.** |
| | Replacement Beacon Light Lens | Red | 855B-ABLR |
| | | Green | 855B-ABLG |
| | | Amber | 855B-ABLA |
| | | Blue | 855B-ABLB |
| | | Clear | 855B-ABLC |
| | | Yellow | 855B-ABLY |

# Specifications

## Table 12 - Mechanical

| Device | The following are reference guidelines for maximum shock and vibration standards for the 855H horn. | |
|---|---|---|
| | Shock | Vibration |
| Range A horn | 15 G peak | 3 G peak |
| Range B horn | 15 G peak | 3 G peak |
| Range C horn | 15 G peak | 3 G peak |
| Range D horn | 15 G peak | 3 G peak |
| Range E horn | 15 G peak | 1 G peak |
| Range A horn with strobe beacon | 15 G peak | 3 G peak |
| Range B horn with strobe beacon | 15 G peak | 3 G peak |
| Range C horn with strobe beacon | 15 G peak | 3 G peak |
| Range D horn with strobe beacon | 15 G peak | 3 G peak |
| Range E horn with strobe beacon | 15 G peak | 1 G peak |

## Table 13 - Environmental

| Attribute | Device | Value |
|---|---|---|
| Ingress ratings | Electronic horns | Range A, B, and D: UL Type 13/3R, IP66<br>Range C and E: UL Type 4/4X/13/3R, IP66 |
| | Horn with beacon | Range A, B, and D: UL Type 13/3R, IP66<br>Range C and E: UL Type 4/4X/13/3R, IP66 |
| Temperature ranges | Operating | -25...+55 °C (-13...+131 °F) |
| | Storage | -40...+75 °C (-40...+167 °F) |

## Table 14 - Materials

| Part | Material |
|---|---|
| Horn cover and base | ABS |
| Beacon housing | Polycarbonate |
| Beacon lens | Polycarbonate |
| Gasket (cover to base) | Nitrile 70 |
| Gasket (enclosure back to wall) | Nitrile 70 |
| Gasket (horn to beacon) | Nitrile 70 |
| Gasket (screw mounting hole) | Fiber |

## Table 15 - Performance Ratings

| Attribute | Device | Performance Rating |
|---|---|---|
| Sound output | Range A horn | 100 dB max @ 1 m (3.3 ft) |
| | Range B horn | 104 dB max @ 1 m (3.3 ft) |
| | Range C horn | 112 dB max @ 1 m (3.3 ft) |
| | Range D horn | 119 dB max @ 1 m (3.3 ft) |
| | Range E horn | 126 dB max @ 1 m (3.3 ft) |
| Xenon Lamp Rating | Strobe beacon | 5 J output |

## Table 16 - Operating Voltage

| Device | DC Voltage | | AC Voltage | | |
|---|---|---|---|---|---|
| | Range A | Range B | Range C | Range D | Range E |
| All horns | 10...30V DC | 10...30V DC | 24V AC, 50/60 Hz (±10%) | 115V AC, 50/60 Hz (±10%) | 230V AC, 50/60 Hz (±10%) |
| All horns with strobe beacon | 12V DC ±10% | 24V DC ±10% | | | |

**Table 17 - Current Consumption [mA]**

| Attribute | | Range A | Range B | Range C | Range D | Range E |
|---|---|---|---|---|---|---|
| Horns | 10...30V DC | 25 | 25 | 25 | 200 | 950 |
| | 24V AC, 50/60 Hz | 40 | 40 | 40 | 500 | 1000 |
| | 115V AC, 50/60 Hz | 13 | 20 | 20 | 100 | 240 |
| | 240V AC, 50/60 Hz | 13 | 15 | 15 | 60 | 120 |
| Horns with strobe beacon | 12V DC | 525 | 525 | 525 | 700 | 1450 |
| | 24V DC | 275 | 275 | 275 | 450 | 1200 |
| | 24V AC | 405 | 405 | 405 | 865 | 1200 |
| | 115V AC | 113 | 120 | 120 | 200 | 340 |
| | 240V AC | 63 | 65 | 65 | 110 | 170 |

**Table 18 - Flashing Frequency**

| Attribute | Range A | Range B | Range C | Range D | Range E |
|---|---|---|---|---|---|
| Strobe beacon | 1 Hz | | | | |

**Table 19 - Standards and Certifications**

| Attribute | Bulletin 855H — High-performance Electronic Horns |
|---|---|
| Standards compliance | • UL 464<br>• CSA C22.2 No. 205<br>• EN/IEC 60947-1<br>• EN/IEC 60947-5-1<br>• EN 6100-6-2<br>• EN 6100-6-4 |
| Certifications | • c-UL-us Listed (File No. S6583, Guides UCST, UCST7)<br>• CE Marked |

## Approximate Dimensions

Dimensions in millimeters (inches). Dimensions are not intended to be used for manufacturing purposes.

### Figure 1 - Horns

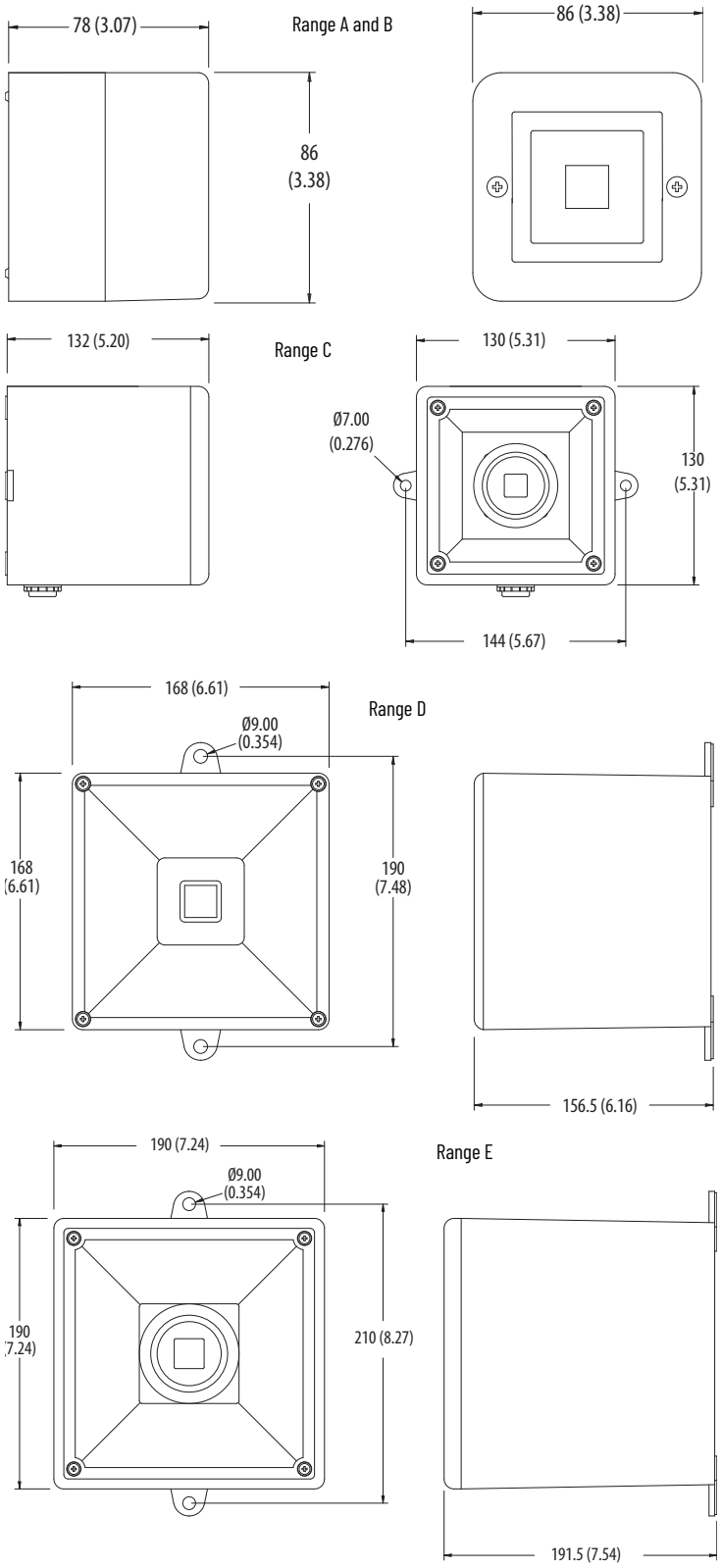

Dimensions in millimeters (inches). Dimensions are not intended to be used for manufacturing purposes.

## Figure 2 - Horns with Beacons

Range A and B

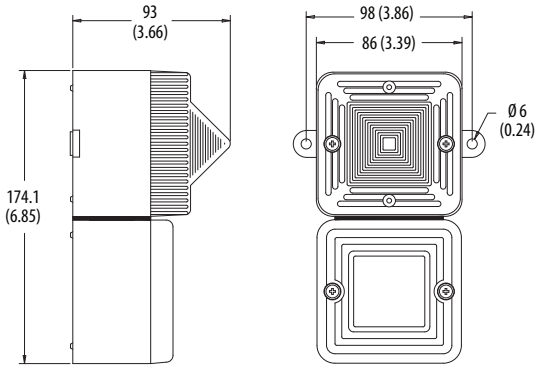


Range C

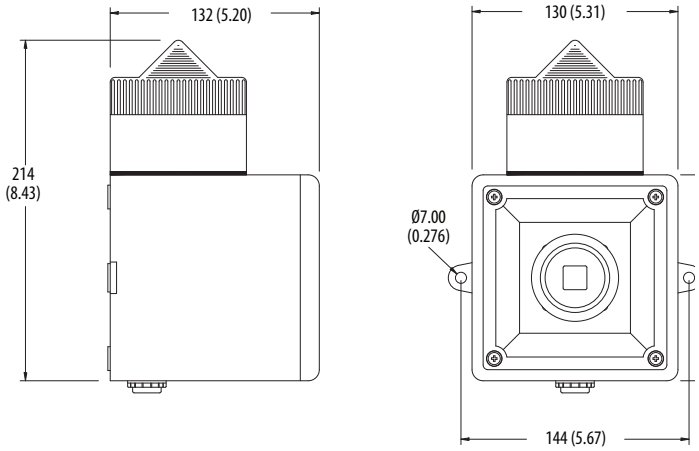


Range D

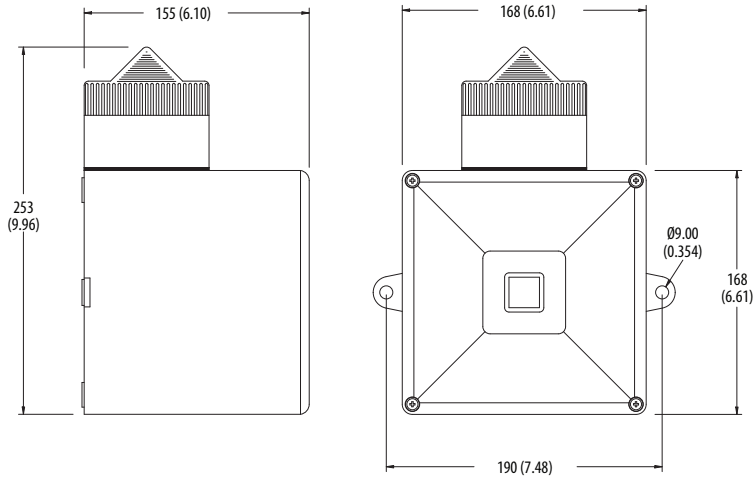


Range E

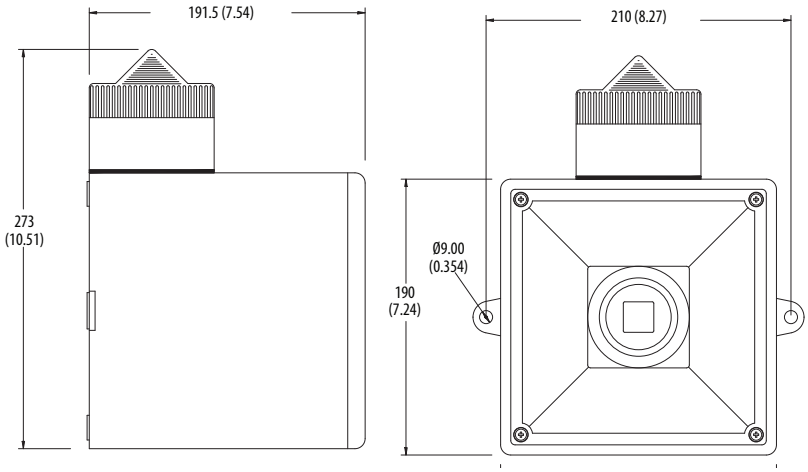

# Bulletin 855H – Recordable Electronic Horns

These devices are available as a standalone electronic horn or with a beacon. You can download melodies or customized tones from any analog device (such as a personal computer or MP3 player). You can also record voice by speaking directly into the unit via an onboard microphone; you do not need to purchase additional recording hardware or equipment.

Frame C (DC)

Frame C (AC)

Frame E (All Versions)

Flair Style (All Versions)

| 855H | - | R | 30 | C |
|---|---|---|---|---|
| | | a | b | c |

| a | |
|---|---|
| **Product Type** | |
| **Code** | **Description** |
| R | Recordable horn |

| b | |
|---|---|
| **Voltage (1)** | |
| **Code** | **Description** |
| 30 | 10...30V DC |
| 45 | 90...260V AC, 50/60 Hz |

| c | |
|---|---|
| **Frame Size** | |
| **Code** | **Description** |
| C | Frame C, 101 dB (A) voice, 110 dB (A) tone at 1 m (3.3 ft), 45 tones, gray housing |
| E | Frame E, 111 dB (A) voice, 126 dB (A) tone at 1 m (3.3 ft), 45 tones, gray housing |
| F | Flare style, 111 dB (A) voice, 126 dB (A) tone at 1 m (3.3 ft), 45 tones, gray housing |

(1) Frame C is 10...30V DC; Frame E and Flare are 14...30V DC

## Recordable Electronic Horns with Attached LED Beacons

Frame C Horn with Beacon (DC)

Frame C Horn with Beacon (AC)

Frame E Horn with Beacon (All Versions)

| 855H | - | RC | 30 | C | 3 |
|---|---|---|---|---|---|
| | | a | b | c | d |

| a | |
|---|---|
| **Product Type (1)** | |
| **Code** | **Description** |
| RC | Recordable horn with LED beacon, gray housing |

| b | |
|---|---|
| **Voltage (2)** | |
| **Code** | **Description** |
| 30 | 12...30V DC |
| 45 | 90...260V AC, 50/60 Hz |

| c | |
|---|---|
| **Horn Type** | |
| **Code** | **Description** |
| C | Frame C, 101 db(A) voice, 110 dB(A) tone at 1 m (3.3 ft), 45 selectable tones, 4 stages |
| E | Frame E, 111 db(A) voice, 126 dB(A) tone at 1 m (3.3 ft), 45 selectable tones, 4 stages |

| d | |
|---|---|
| **LED Color** | |
| **Code** | **Description** |
| 3 | Green |
| 4 | Red |
| 5 | Amber |

(1) LED beacon steady or flashing selectable/
(2) Frame C is 12...30V DC; Frame E is 14...30V DC

# Specifications

**Table 20 - Mechanical**

| Device | The following are reference guidelines for maximum shock and vibration standards for the 855H horn. | |
|---|---|---|
| | Shock | Vibration |
| Frame C horn | 15 G peak | 3 G peak |
| Frame E horn | 15 G peak | 1 G peak |
| Flare style | 15 G peak | 1 G peak |
| Frame C horn with LED beacon | 15 G peak | 3 G peak |
| Frame E horn with LED beacon | 15 G peak | 1 G peak |

**Table 21 - Environmental**

| Attribute | Device | Value |
|---|---|---|
| Ingress ratings | Electronic horns | Frame C & E: UL Type 3R, 4/4X, 13, IP66<br>Flare: UL Type 3R, 4/4X, 13, IP66/IP67 |
| | Horn with beacon | |
| Temperature ranges | Operating | -25...+55 °C (-13...+131 °F) |
| | Storage | -40...+70 °C (-40...+158 °F) |

**Table 22 - Materials**

| Part | Material |
|---|---|
| Horn cover and base | ABS |
| Beacon housing | Polycarbonate |
| Beacon lens | Polycarbonate |
| Gasket (cover to base) | Nitrile 70 |
| Gasket (enclosure back to wall) | Closed-cell neoprene foam |
| Gasket (horn to beacon) | Closed-cell neoprene foam |
| Gasket (screw mounting hole) | Fiber |

**Table 23 - Performance Ratings**

| Attribute | Device | Performance Rating |
|---|---|---|
| Sound output | Frame C horn | 110 dB(A) tone, 103 dB(A) music, 101 dB(A) voice @ 1 m (3.3 ft) |
| | Frame E horn | 126 dB(A) tone, 112 dB(A) music, 111 dB(A) voice @ 1 m (3.3 ft) |
| | Flare style | |

**Table 24 - Operating Voltage**

| Device | DC Voltage | AC Voltage |
|---|---|---|
| All horns | Frame C: 10...30V DC<br>Frame E and Flare: 14...30V DC | 90...260V AC, 50/60 Hz |
| All horns with LED beacon | Frame C: 12...30V DC<br>Frame E: 14...30V DC | |

**Table 25 - Maximum Current Consumption**

| Attribute | | Frame C | Frame E | Flare Style |
|---|---|---|---|---|
| Horns | 24V DC | 256 mA | 1.51 A | 1.51 A |
| | 120V AC, 50/60 Hz | 112 mA | 542 mA | 542 mA |
| | 230V AC, 50/60 Hz | 124 mA | 517 mA | 517 mA |
| Horns with LED beacon | 24V DC | 413 mA | 1.67 A | — |
| | 120V AC, 50/60 Hz | 172 mA | 602 mA | — |
| | 230V AC, 50/60 Hz | 159 mA | 552 mA | — |

**Table 26 - Flashing Frequency**

| Attribute | | Frame C | Frame E | Flare Style |
|---|---|---|---|---|
| LED beacon | | 2 Hz | | |
| LED light output | Red | 66 cd | | |
| | Amber | 78 cd | | |
| | Green | 129 cd | | |

**Table 27 - Standards and Certifications**

| Attribute | Bulletin 855H — Recordable Electronic Horns |
|---|---|
| Standards compliance | • UL 464<br>• CSA C22.2 No. 205<br>• EN 60065<br>• EN 6100-6-1<br>• EN 6100-6-2<br>• EN 6100-6-3<br>• EN 6100-6-4 |
| Certifications | • c-UL-us Listed (File No. S6583, Guides UCST, UCST7)<br>• CE Marked |

## Approximate Dimensions

Dimensions in millimeters (inches). Dimensions are not intended to be used for manufacturing purposes.

**Figure 3 - Recordable Horns**

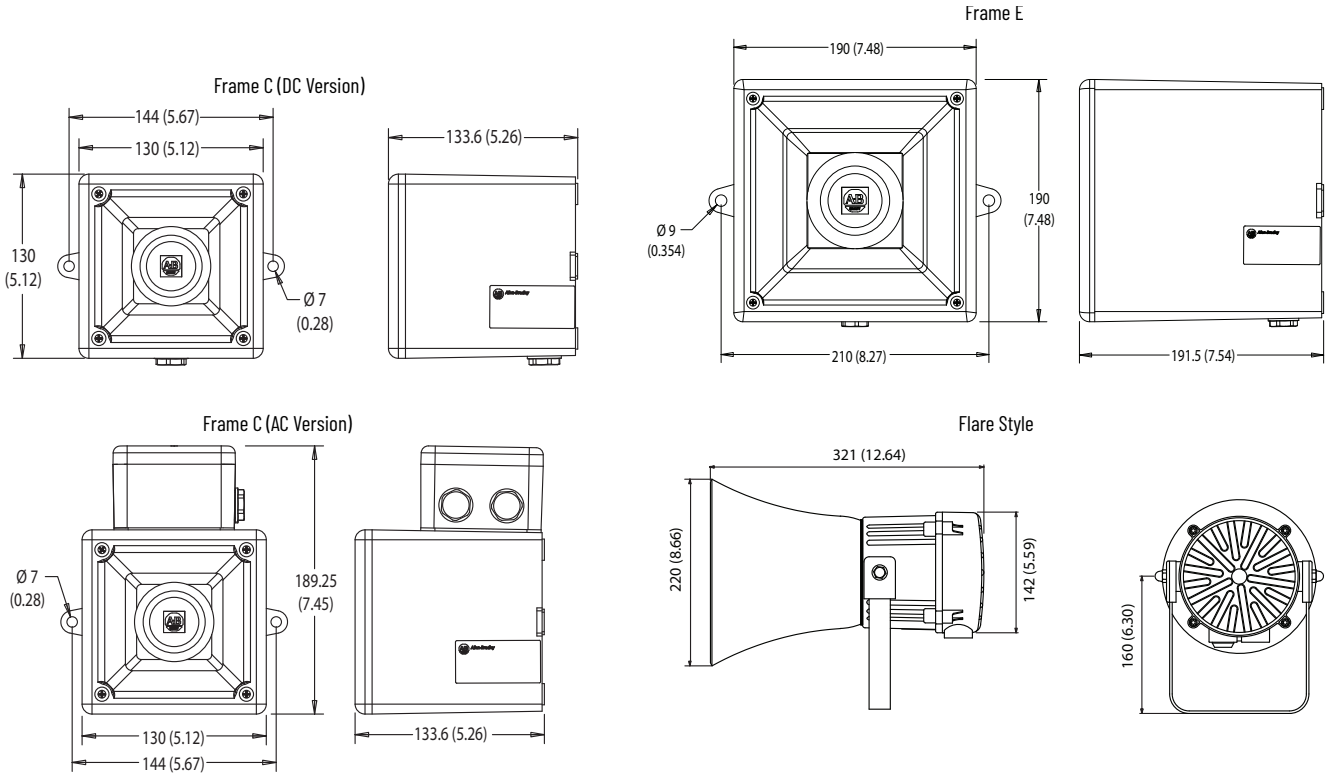

## Figure 4 - Recordable Horns with LED Beacon

Frame C (DC Version)

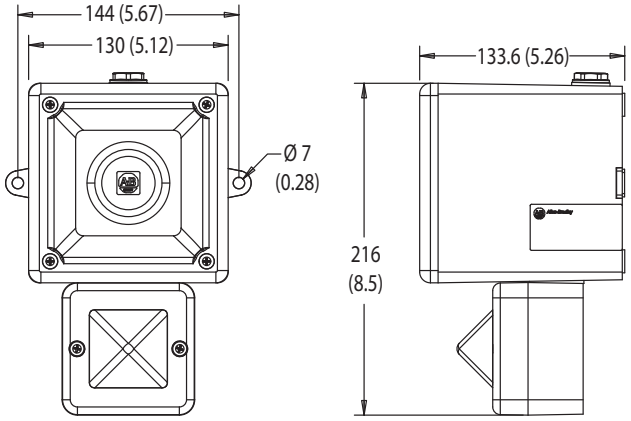


Frame C (AC Version)

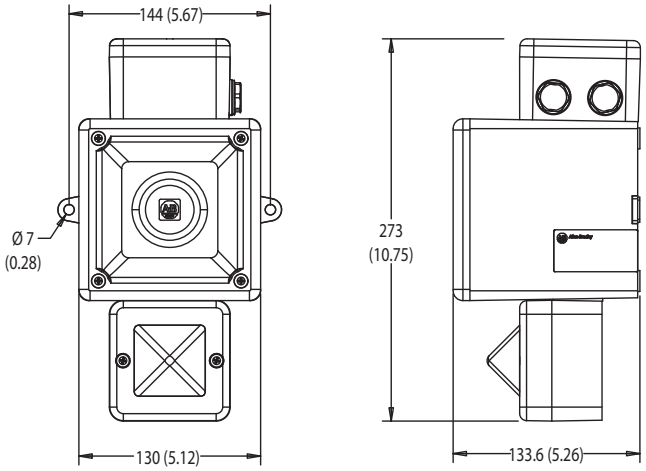


Frame E

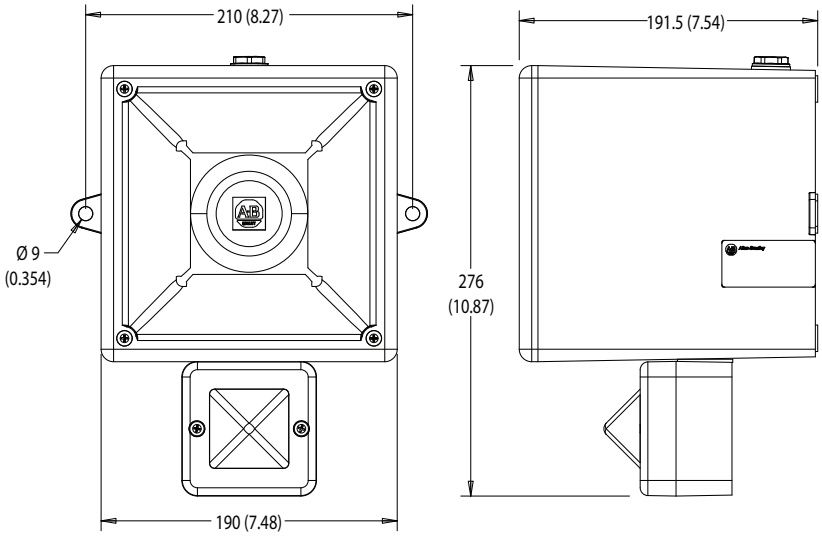

# Bulletin 855HM — High-performance Electronic Metal Horns

These devices are available as a standalone electronic horn or with a beacon. They are available in plastic or marine-grade aluminum housing.

- 24V DC, 120V AC, and 240V AC
- IP66 enclosure rating
- Selectable steady/flashing LED dome-shaped illumination available in five colors
- Marine-grade aluminum enclosure (c-UL-us, Type 4/4X/13/3R)
- Output/Tones: 119 dB/45 tones (3 stages)

## High-performance Electronic Metal Horns

| 855HM | - | G | M | D30 | D |
|---|---|---|---|---|---|
| | | a | b | c | d |

| a | |
|---|---|
| Housing Color | |
| Code | Description |
| G | Gray |

| b | |
|---|---|
| Conduit Entry | |
| Code | Description |
| M | Two M20 x 1.5 mm conduit entries |

| c | |
|---|---|
| Voltage | |
| Code | Description |
| D30 | 10...30V DC |
| A10 | 115V AC, 50/60 Hz |
| A20 | 230V AC, 50/60 Hz |

| d | |
|---|---|
| Horn Type | |
| Code | Description |
| D | 119 dB, 45 tone, 3-stage |

## High-performance Electronic Metal Horns with Attached LED Beacons

| 855HM | - | C | G | M | D30 | D | L | 3 |
|---|---|---|---|---|---|---|---|---|
| | | a | b | c | d | e | f | g |

| a | |
|---|---|
| Product Type | |
| Code | Description |
| C | Electronic horn with LED steady/flashing beacon |

| b | |
|---|---|
| Housing Color | |
| Code | Description |
| G | Gray |

| c | |
|---|---|
| Conduit Entry | |
| Code | Description |
| M | Two M20 x 1.5 mm conduit entries |

| d | |
|---|---|
| Voltage | |
| Code | Description |
| D30 | 12...30V DC |
| A10 | 115V AC, 50/60 Hz |
| A20 | 230V AC, 50/60 Hz |

| e | |
|---|---|
| Horn Type | |
| Code | Description |
| D | 119 dB, 45 tone, 3-stage |

| f | |
|---|---|
| Illumination Function | |
| Code | Description |
| L | Steady/flashing LED |

| g | |
|---|---|
| Lens Color | |
| Code | Description |
| 3 | Green |
| 4 | Red |
| 5 | Amber |
| 6 | Blue |
| 7 | Clear |

## Accessories

| | Description | Cat. No. |
|---|---|---|
| | M20 hole plug replacement kit | 855H-AHPK |

## Specifications

### Table 28 - Mechanical

| Device | The following are reference guidelines for maximum shock and vibration standards for the 855XM horn. | |
|---|---|---|
| | Shock [G] | Vibration [G] |
| Metal horn | 40 | 3 |
| Metal horn with LED beacon | 30 | 3 |

### Table 29 - Environmental

| Attribute | Device | Value |
|---|---|---|
| Ingress rating | Electronic horn | UL Type 4/4X/13/3R, IP66 |
| | Horn with beacon | UL Type 4/4X/13/3R, IP66 |
| Temperature range | Operating | -25...+55 °C (-13...+131 °F) |
| | Storage | -40...+70 °C (-40...+158 °F) |

### Table 30 - Materials

| Part | Material |
|---|---|
| Housing | Marine-grade aluminum Al Si 12 Cu (phosphated and powder-coated) |
| Screws | Stainless steel |
| Beacon lens | Clear polycarbonate over glass |
| Lens cage | Stainless steel |
| Gasket (cover to base) | O-ring nitrile UL |
| Gasket (screw mounting hole) | Fiber washer |

### Table 31 - Performance Ratings

| Device | Sound Output @ 1 m (3.3 ft) | Volume Control | No. of Tones | Stages |
|---|---|---|---|---|
| Metal horn | 119 dB max | Adjustable -12 dB | 45 | 3 |
| | LED Output [cd] | | | |
| Red LED beacon | 66 | | | |
| Amber LED beacon | 78 | | | |
| Green LED beacon | 176 | | | |
| Blue LED beacon | 45 | | | |
| Clear LED beacon | 120 | | | |

### Table 32 - Operating Voltage

| Device | DC Voltage | AC Voltage |
|---|---|---|
| Horn | 10...30V DC | 115V AC 50/60 Hz (±10%)<br>230V AC 50/60 Hz (±10%) |
| Horn with beacon | 12...30V DC | 115V AC 50/60 Hz (±10%)<br>230V AC 50/60 Hz (±10%) |

### Table 33 - Current Consumption

| Device | Voltage | Current Consumption |
|---|---|---|
| Horns | 10...30V DC | 270 mA max. @ 30V<br>200 mA @ 24V<br>100 mA @ 12V |
| | 115V AC 50/60 Hz | 100 mA |
| | 230V AC 50/60 Hz | 60 mA |
| Horns with LED beacon | 12...30V DC | 436 mA max. @ 30V<br>357 mA @ 24V<br>220 mA @ 12V |
| | 115V AC | 160 mA |
| | 230V AC | 95 mA |

### Table 34 - Flashing Frequency

| Device | Frequency |
|---|---|
| LED beacon | Steady or 2 Hz |

### Table 35 - Standards and Certifications

| Attribute | Bulletin 855HM — High-performance Electronic Metal Horns |
|---|---|
| Standards compliance | • CSA C22.2 No. 205<br>• EN/IEC 60947-1<br>• EN/IEC 60947-5-1<br>• EN 61000-6-2<br>• EN 61000-6-4<br>• UL 464<br>• UL 1638 |
| Certifications | • CE Marked<br>• c-UL-us Listed (File No. E197159 and S6583, Guides UCST, UCST7) |

# Tone Table

| Tone Selection | | | | | | | | | | |
|---|---|---|---|---|---|---|---|---|---|---|
| STAGE 1 | FREQUENCY DESCRIPTION | | Switch | | | | | | Stage 2 | Stage 3 |
| Tone 1 | 340 Hz Continuous | | | | | | | | Tone 2 | Tone 5 |
| Tone 2 | 800/1000Hz @ 0.25 sec Alternating | | ■ | | | | | | Tone 17 | Tone 5 |
| Tone 3 | 500/1200Hz @ 0.3Hz 0.5 sec Slow Whoop | | | ■ | | | | | Tone 2 | Tone 5 |
| Tone 4 | 800/1000Hz @ 1Hz Sweeping | | ■ | ■ | | | | | Tone 6 | Tone 5 |
| Tone 5 | 2400Hz Continuous | | | | ■ | | | | Tone 3 | Tone 20 |
| Tone 6 | 2400/2900Hz @ 7Hz Sweeping | | ■ | | ■ | | | | Tone 7 | Tone 5 |
| Tone 7 | 2400/2900Hz @ 1Hz Sweeping | | | ■ | ■ | | | | Tone 10 | Tone 5 |
| Tone 8 | 500/1200/500Hz @ 0.3Hz Sweeping | | ■ | ■ | ■ | | | | Tone 2 | Tone 5 |
| Tone 9 | 1200/500Hz @ 1Hz - DIN / PFEER P.T.A.P. | | | | | ■ | | | Tone 15 | Tone 2 |
| Tone 10 | 2400/2900Hz @ 2Hz Alternating | | ■ | | | ■ | | | Tone 7 | Tone 5 |
| Tone 11 | 1000Hz @ 1Hz Intermittent | | | ■ | | ■ | | | Tone 2 | Tone 5 |
| Tone 12 | 800/1000Hz @ 0.875Hz Alternating | | ■ | ■ | | ■ | | | Tone 4 | Tone 5 |
| Tone 13 | 2400Hz @ 1Hz Intermittent | | | | ■ | ■ | | | Tone 15 | Tone 5 |
| Tone 14 | 800Hz 0.25sec on, 1 sec off Intermittent | | ■ | | ■ | ■ | | | Tone 4 | Tone 5 |
| Tone 15 | 800Hz Continuous | | | ■ | ■ | ■ | | | Tone 2 | Tone 5 |
| Tone 16 | 660Hz 150mS on, 150mS off Intermittent | | ■ | ■ | ■ | ■ | | | Tone 18 | Tone 5 |
| Tone 17 | 544Hz (100mS)/440Hz (400mS) - NF S 32-001 | | | | | | ■ | | Tone 2 | Tone 27 |
| Tone 18 | 660Hz 1.8sec on, 1.8sec off Intermittent | | ■ | | | | ■ | | Tone 2 | Tone 5 |
| Tone 19 | 1.4KHz-1.6KHz 1s, 1.6KHz-1.4KHz 0.5s -NFC48-265 | | | ■ | | | ■ | | Tone 2 | Tone 5 |
| Tone 20 | 660Hz Continuous | | ■ | ■ | | | ■ | | Tone 2 | Tone 5 |
| Tone 21 | 554Hz/440Hz @ 1Hz Alternating | | | | ■ | | ■ | | Tone 2 | Tone 5 |
| Tone 22 | 544Hz @ 0.875 sec. Intermittent | | ■ | | ■ | | ■ | | Tone 2 | Tone 5 |
| Tone 23 | 800Hz @ 2Hz Intermittent | | | ■ | ■ | | ■ | | Tone 6 | Tone 5 |
| Tone 24 | 800/1000Hz @ 50Hz Sweeping | | ■ | ■ | ■ | | ■ | | Tone 29 | Tone 5 |
| Tone 25 | 2400/2900Hz @ 50Hz Sweeping | | | | | ■ | ■ | | Tone 29 | Tone 5 |
| Tone 26 | Bell | | ■ | | | ■ | ■ | | Tone 2 | Tone 15 |
| Tone 27 | 554Hz Continuous | | | ■ | | ■ | ■ | | Tone 26 | Tone 5 |
| Tone 28 | 440Hz Continuous | | ■ | ■ | | ■ | ■ | | Tone 2 | Tone 5 |
| Tone 29 | 800/1000Hz @ 7Hz Sweeping | | | | ■ | ■ | ■ | | Tone 7 | Tone 5 |
| Tone 30 | 300Hz Continuous | | ■ | | ■ | ■ | ■ | | Tone 2 | Tone 5 |
| Tone 31 | 660/1200Hz @ 1Hz Sweeping | | | ■ | ■ | ■ | ■ | | Tone 26 | Tone 5 |
| Tone 32 | Two tone chime. | | ■ | ■ | ■ | ■ | ■ | | Tone 26 | Tone 15 |
| Tone 33 | 745Hz @ 1Hz Intermittent | | | | | | | ■ | Tone 2 | Tone 5 |
| Tone 34 | 1000 & 2000Hz @ 0.5 sec Alternating - Singapore | | ■ | | | | | ■ | Tone 38 | Tone 45 |
| Tone 35 | 420Hz @ 0.625 sec Australian Alert | | | ■ | | | | ■ | Tone 36 | Tone 5 |
| Tone 36 | 500-1200Hz 3.75sec /0.25sec. Australian Evac. | | ■ | ■ | | | | ■ | Tone 35 | Tone 5 |
| Tone 37 | 1000Hz Continuous - PFEER Toxic Gas | | | | ■ | | | ■ | Tone 9 | Tone 45 |
| Tone 38 | 2000Hz Continuous | | ■ | | ■ | | | ■ | Tone 34 | Tone 45 |
| Tone 39 | 800Hz 0.25sec on, 1 sec off Intermittent | | | ■ | ■ | | | ■ | Tone 23 | Tone 17 |
| Tone 40 | 544Hz (100mS)/440Hz (400mS) - NF S 32-001 | | ■ | ■ | ■ | | | ■ | Tone 31 | Tone 27 |
| Tone 41 | Motor Siren - slow rise to 1200 Hz | | | | | ■ | | ■ | Tone 2 | Tone 5 |
| Tone 42 | Motor Siren - slow rise to 800 Hz | | ■ | | | ■ | | ■ | Tone 2 | Tone 5 |
| Tone 43 | 1200 Hz Continuous | | | ■ | | ■ | | ■ | Tone 2 | Tone 5 |
| Tone 44 | Motor Siren - slow rise to 2400 Hz | | ■ | ■ | | ■ | | ■ | Tone 2 | Tone 5 |
| Tone 45 | 1KHz 1s on, 1s off Intermittent - PFEER Gen. Alarm | | | | ■ | ■ | | ■ | Tone 38 | Tone 34 |

## Approximate Dimensions

Dimensions in millimeters (inches). Dimensions are not intended to be used for manufacturing purposes.

855HM Metal Horn

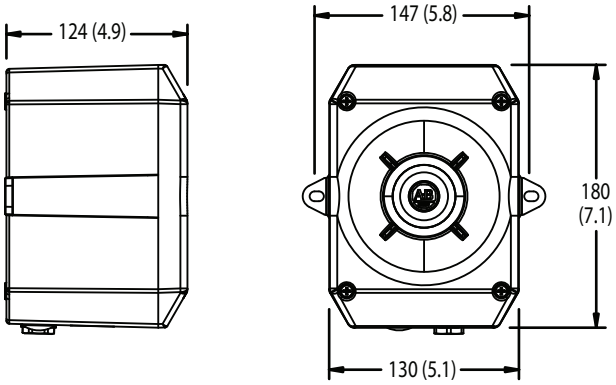


855HM-C Metal Horn with LED Beacon

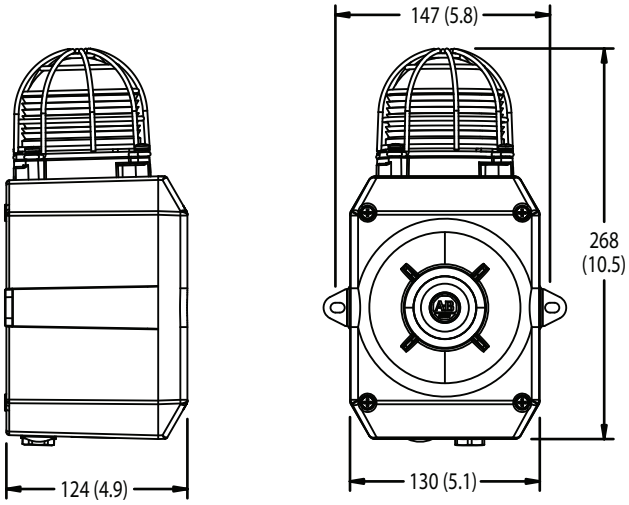

This product line includes mini square and round beacons.

## Bulletin 855B — Mini Square Beacons

Mini square 5 J strobe beacons are for general signaling applications. Bases accept conduit connections in the side and back of enclosure.

Mini Square Strobe Beacon

| 855B | - | G | MS | 12 | R | 3 |
|---|---|---|---|---|---|---|
| | | a | b | c | d | e |

| a | |
|---|---|
| Housing Color | |
| Code | Description |
| G | Gray |

| b | |
|---|---|
| Beacon Type | |
| Code | Description |
| MS | Mini square beacon |

| c | |
|---|---|
| Voltage | |
| Code | Description |
| 24 | 24V AC/DC |
| 10 | 115V AC, 50/60 Hz |
| 20 | 230V AC, 50/60 Hz |

| d | |
|---|---|
| Illumination Type | |
| Code | Description |
| R | 5 J strobe |

| e | |
|---|---|
| Lens Color | |
| Code | Description |
| 3 | Green |
| 4 | Red |
| 5 | Amber |
| 6 | Blue |
| 7 | Clear |
| 8 | Yellow |

## Accessories

| | Description | Color | Cat. No. |
|---|---|---|---|
| | Replacement Beacon Light Lens | Red | 855B-ABLR |
| | | Green | 855B-ABLG |
| | | Amber | 855B-ABLA |
| | | Blue | 855B-ABLB |
| | | Clear | 855B-ABLC |
| | | Yellow | 855B-ABLY |

# Specifications

## Table 36 - Mechanical

| Device | The following are reference guidelines for maximum shock and vibration standards for the 855B beacon lights. | |
|---|---|---|
| | Shock | Vibration |
| All strobe beacons | 50 G peak | 5 G peak |

## Table 37 - Environmental

| Attribute | Value |
|---|---|
| Ingress ratings | UL Type 4/4X/13/3R, IP66 |
| Operating temperature range | -25...+55 °C (-12...+131 °F) |

## Table 38 - Materials

| Part | Material |
|---|---|
| Housing and lens | Polycarbonate |
| Gasket | Nitrile 70 |

## Table 39 - Performance Ratings

| Attribute | Device | Performance Rating |
|---|---|---|
| Xenon lamp rating | All strobe beacons | 5 J |

## Table 40 - Operating Voltage

| Device | Operating Voltage | | |
|---|---|---|---|
| All strobe beacons | 24V AC/DC, 50/60 Hz (±20%) | 120V AC, 50/60 Hz (±10%) | 230V AC, 50/60 Hz (±10%) |

## Table 41 - Current Consumption

| Device | | Current Consumption [mA] |
|---|---|---|
| All strobe beacons | 24V AC/DC | 365/250 |
| | 120V AC | 100 |
| | 230V AC | 50 |

## Table 42 - Flashing Frequency

| Device | Flashing Frequency |
|---|---|
| Strobe beacon | 1 Hz |

## Table 43 - Standards and Certifications

| Attribute | Bulletin 855B — Mini Square Beacons |
|---|---|
| Standards compliance | • UL 464<br>• UL 1638<br>• CSA C22.2 No. 205<br>• EN/IEC 60947-1<br>• EN/IEC 60947-5-1<br>• EN 6100-6-2<br>• EN 6100-6-4<br>• CAN/ULLC-S526-M87 |
| Certifications | • c-UL-us Listed (File No. E197159, Guides UUES, UEES7)<br>• CE Marked |

## Approximate Dimensions

Dimensions in millimeters (inches). Dimensions are not intended to be used for manufacturing purposes.

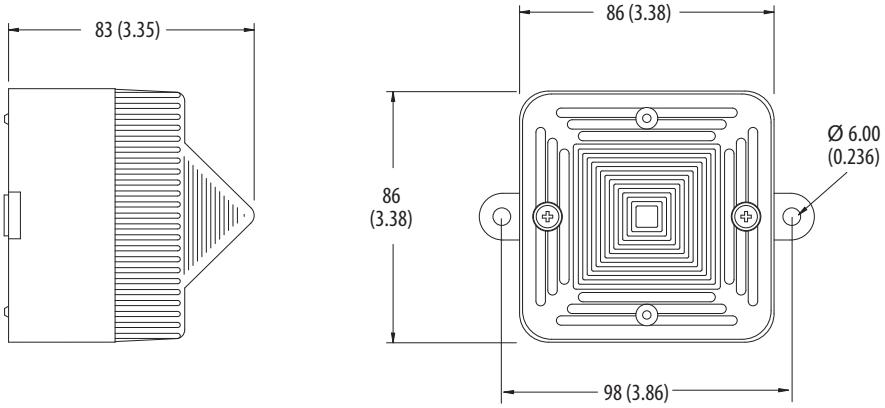


## Bulletin 855B — Industrial Round Beacons

These devices are available in three diameters: 90 mm (Bul. 855BS), 120 mm (Bul. 855BM), and 160 mm (Bul. 855BL).

All sizes are available in steady halogen, flashing halogen, strobe, and rotating halogen versions for flexibility in your applications. You can select from a wide range of mounting options, voltages, and colors.

### Bulletin 855BS — 90 mm Beacons

| 855BS | - | S | 10 | RH | 3 |
|---|---|---|---|---|---|
| | | a | b | c | d |

| a | |
|---|---|
| **Base Type** | |
| **Code** | **Description** |
| S | Surface mount (1) |
| N | 1/2 in. NPT conduit mount |
| T | 25 mm tube mount (2) |

| b | |
|---|---|
| **Voltage** | |
| **Code** | **Description** |
| 12 | 12V AC/DC |
| 24 | 24V AC/DC |
| 10 | 120V AC |
| 20 | 240V AC |
| 35 | 24/48V AC/DC |
| 45 | 120/240V AC/DC |

| c | |
|---|---|
| **Function** | |
| **Code** | **Description** |
| DH | Steady halogen |
| FH | Flashing halogen |
| RH | Rotating halogen |
| BR | Xenon tube strobe (3) |
| SL | Single-color LED selectable steady/flash (4) |
| ML | Three-color LED (5) (6) |
| BL | LED strobe selectable single/double flash(7) |

| d | |
|---|---|
| **Lens Color** | |
| **Code** | **Description** |
| 345 | Green, red, amber (6) |
| 3 | Green |
| 4 | Red |
| 5 | Amber |
| 6 | Blue |
| 7 | Clear |
| 8 | Yellow |

(1) Surface mount base must be installed with rough wall plate for UL Type 4/4X/13 rating, otherwise UL Type 1 only.
(2) 25 mm tube mount is UL Recognized. Other mounting types are UL Listed.
(3) Not available in 12V AC/DC.
(4) SL function uses 35 (16...60V AC/16...80V DC) and 45 (90...250V AC/DC) voltage codes only
(5) ML function uses 24, 10, and 20 voltage codes only.
(6) Green, red, amber color combination is only valid for the three-color LED selection (ML).
(7) BL function uses 35 (19...52V AC/16...60V DC), 10, and 20 voltage codes only.

## Bulletin 855BM — 120 mm Beacons

| 855BM | - | S | 10 | FH | 4 |
|---|---|---|---|---|---|
| | | a | b | c | d |

| a | |
|---|---|
| **Base Type** | |
| **Code** | **Description** |
| S | Surface mount [1] |
| N | 1/2 in. NPT conduit mount |
| T | 25 mm tube mount |

| b | |
|---|---|
| **Voltage** | |
| **Code** | **Description** |
| 12 | 12V AC/DC |
| 24 | 24V AC/DC |
| 10 | 120V AC |
| 20 | 240V AC |

| c | |
|---|---|
| **Function** | |
| **Code** | **Description** |
| DH | Steady halogen |
| FH | Flashing halogen |
| RH | Rotating halogen |
| BR | Xenon tube strobe [2] |

| d | |
|---|---|
| **Lens Color** | |
| **Code** | **Description** |
| 3 | Green |
| 4 | Red |
| 5 | Amber |
| 6 | Blue |
| 7 | Clear |
| 8 | Yellow |

(1) When used outdoors, surface mount base must be installed with rough wall plate for UL Type 4/4X/13 rating, otherwise UL Type 1 only.
(2) Not available in 12V AC/DC.

## Bulletin 855BL — 160 mm Beacons

| 855BL | - | N | 24 | DH | 5 |
|---|---|---|---|---|---|
| | | a | b | c | d |

| a | |
|---|---|
| **Base Type** | |
| **Code** | **Description** |
| S | Surface mount [1] |
| N | 1 in. NPT conduit mount |
| T | 25 mm tube mount |

| b | |
|---|---|
| **Voltage** | |
| **Code** | **Description** |
| 12 | 12V AC/DC |
| 24 | 24V AC/DC |
| 10 | 120V AC |
| 20 | 240V AC |

| c | |
|---|---|
| **Function** | |
| **Code** | **Description** |
| DH | Steady halogen |
| FH | Flashing halogen |
| RH | Rotating halogen |
| BR | Xenon tube strobe [2] |

| d | |
|---|---|
| **Lens Color** | |
| **Code** | **Description** |
| 3 | Green |
| 4 | Red |
| 5 | Amber |
| 6 | Blue |
| 7 | Clear |
| 8 | Yellow |

(1) When used outdoors surface mount base must be installed with rough wall plate for UL Type 4/4X/13 rating, otherwise UL Type 1 only.
(2) Not available in 12V AC/DC.

# Accessories

## Lamps

| 855B | M | - | LH | 10 |
|---|---|---|---|---|
| | a | | b | c |

| a | |
|---|---|
| Size | |
| Code | Description |
| S | 90 mm |
| M | 120 mm |
| L | 160 mm |

| b | |
|---|---|
| Function | |
| Code | Description |
| LH | Halogen |

| c | |
|---|---|
| Voltage | |
| Code | Description |
| 12 | 12V AC/DC |
| 24 | 24V AC/DC |
| 10 | 120V AC |
| 20 | 240V AC |

## Lenses

| 855B | L | - | AFL | 4 |
|---|---|---|---|---|
| | a | | b | c |

| a | |
|---|---|
| Size | |
| Code | Description |
| S | 90 mm |
| M | 120 mm |
| L | 160 mm |

| b | |
|---|---|
| Function | |
| Code | Description |
| ASL | Replacement smooth lens (1) |
| AFL | Replacement Fresnel lens (2) |
| ALL | Replacement LED lens (3) |

| c | |
|---|---|
| Voltage | |
| Code | Description |
| 3 | Green |
| 4 | Red |
| 5 | Amber |
| 6 | Blue |
| 7 | Clear |
| 8 | Yellow |

(1) Smooth lens for rotating function only.
(2) Fresnel lens not for use with LED beacons
(3) LED lens for 90 mm only.

## Power Module Assemblies

| 855B | L | - | ARA | 10 |
|---|---|---|---|---|
| | a | | b | c |

| a | |
|---|---|
| Size | |
| Code | Description |
| S | 90 mm |
| M | 120 mm |
| L | 160 mm |

| b | |
|---|---|
| Function | |
| Code | Description |
| ARA | Replacement rotating power module |
| ADA | Replacement steady power module |
| AFA | Replacement flashing power module |
| ABA | Replacement strobe power module |

| c | |
|---|---|
| Voltage | |
| Code | Description |
| 12 | 12V AC/DC |
| 24 | 24V AC/DC |
| 10 | 120V AC |
| 20 | 240V AC |

## Miscellaneous Accessories and Replacement Parts

| 855B | M | - | LS |
|---|---|---|---|
| | a | | b |

| a | |
|---|---|
| Size | |
| Code | Description |
| S | 90 mm |
| M | 120 mm |
| L | 160 mm |

| b | |
|---|---|
| Function | |
| Code | Description |
| ALSG | Lens gaskets (bag of 5) |
| AMM | Magnetic mount |
| ASFG | Surface mount gaskets (bag of 5) |
| AMTG | Metric tube gaskets (bag of 5) |
| AWP | Rough wall plate (1) |
| AVM | Vertical bracket |
| LS | Strobe tube (120 mm or 160 mm only) (2) |
| ABS | Surface mount base (3) |
| ABN | NPT conduit mount base |

(1) Required for UL Type 4/4X/13 rating when using surface mount base outdoors.
(2) This replacement part is for use only in 120V and 240V units. For 24V units, order complete power module replacement (catalog number 855BM-ABA24 or catalog number 855BL-ABA24).
(3) When used outdoors surface mount base must be installed with rough wall plate for UL Type 4/4X/13 rating, otherwise UL Type 1 only.

## Table 44 - Lamps, Lenses, and Power Modules

| | Description | | 90 mm | 120 mm | 160 mm |
|---|---|---|---|---|---|
| | **Replacement Lamps** | **Voltage** | **Cat. No.** | **Cat. No.** | **Cat. No.** |
| | Xenon strobe tube | | – | 855BM-LS (1) | 855BL-LS (1) |
| | Halogen for steady burning, flashing, and rotating illumination functions | 12V AC/DC | 855BS-LH12 | 855BM-LH12 | 855BL-LH12 |
| | | 24V AC/DC | 855BS-LH24 | 855BM-LH24 | 855BL-LH24 |
| | | 120V AC | 855BS-LH10 | 855BM-LH10 | 855BL-LH10 |
| | | 240V AC | 855BS-LH20 | 855BM-LH20 | 855BL-LH20 |
| | **Replacement Lenses** | **Lens Color** | **Cat. No.** | **Cat. No.** | **Cat. No.** |
| | Smooth lens for rotating beacon only | Green | 855BS-ASL3 | 855BM-ASL3 | 855BL-ASL3 |
| | | Red | 855BS-ASL4 | 855BM-ASL4 | 855BL-ASL4 |
| | | Amber | 855BS-ASL5 | 855BM-ASL5 | 855BL-ASL5 |
| | | Blue | 855BS-ASL6 | 855BM-ASL6 | 855BL-ASL6 |
| | | Clear | 855BS-ASL7 | 855BM-ASL7 | 855BL-ASL7 |
| | | Yellow | 855BS-ASL8 | 855BM-ASL8 | 855BL-ASL8 |
| | Fresnel lens for steady and flashing halogen and xenon strobe functions (not for use in LED beacons) | Green | 855BS-AFL3 | 855BM-AFL3 | 855BL-AFL3 |
| | | Red | 855BS-AFL4 | 855BM-AFL4 | 855BL-AFL4 |
| | | Amber | 855BS-AFL5 | 855BM-AFL5 | 855BL-AFL5 |
| | | Blue | 855BS-AFL6 | 855BM-AFL6 | 855BL-AFL6 |
| | | Clear | 855BS-AFL7 | 855BM-AFL7 | 855BL-AFL7 |
| | | Yellow | 855BS-AFL8 | 855BM-AFL8 | 855BL-AFL8 |
| | LED lens for 90 mm beacons only | Green | 855BS-ALL3 | – | – |
| | | Red | 855BS-ALL4 | – | – |
| | | Amber | 855BS-ALL5 | – | – |
| | | Blue | 855BS-ALL6 | – | – |
| | | Clear | 855BS-ALL7 | – | – |
| | | Yellow | 855BS-ALL8 | – | – |
| | **Power Modules (2)** | **Voltage** | **Cat. No.** | **Cat. No.** | **Cat. No.** |
| | Rotating power module | 12V AC/DC | 855BS-ARA12 | 855BM-ARA12 | 855BL-ARA12 |
| | | 24V AC/DC | 855BS-ARA24 | 855BM-ARA24 | 855BL-ARA24 |
| | | 120V AC | 855BS-ARA10 | 855BM-ARA10 | 855BL-ARA10 |
| | | 240V AC | 855BS-ARA20 | 855BM-ARA20 | 855BL-ARA20 |
| | Steady power module | 12V AC/DC | 855BS-ADA12 | 855BM-ADA12 | 855BL-ADA12 |
| | | 24V AC/DC | 855BS-ADA24 | 855BM-ADA24 | 855BL-ADA24 |
| | | 120V AC | 855BS-ADA10 | 855BM-ADA10 | 855BL-ADA10 |
| | | 240V AC | 855BS-ADA20 | 855BM-ADA20 | 855BL-ADA20 |
| | Flashing power module | 12V AC/DC | 855BS-AFA12 | 855BM-AFA12 | 855BL-AFA12 |
| | | 24V AC/DC | 855BS-AFA24 | 855BM-AFA24 | 855BL-AFA24 |
| | | 120V AC | 855BS-AFA10 | 855BM-AFA10 | 855BL-AFA10 |
| | | 240V AC | 855BS-AFA20 | 855BM-AFA20 | 855BL-AFA20 |
| | Strobe power module | 24V AC/DC | 855BS-ABA24 | 855BM-ABA24 | 855BL-ABA24 |
| | | 120V AC | 855BS-ABA10 | 855BM-ABA10 | 855BL-ABA10 |
| | | 240V AC | 855BS-ABA20 | 855BM-ABA20 | 855BL-ABA20 |

(1) This replacement part is for use only in 120V and 240V units. For 24V units, order complete power module replacement (Cat. No. 855BM-ABA24 or Cat. No. 855BL-ABA24).
(2) All power modules include a lamp.

### Table 45 - Bases and Miscellaneous Accessories and Replacement Parts

| | Description | 90 mm | 120 mm | 160 mm |
|---|---|---|---|---|
| | **Replacement Bases** | **Cat. No.** | **Cat. No.** | **Cat. No.** |
| | Surface mount base [1] | 855BS-ABS | 855BM-ABS | 855BL-ABS |
| | 1/2 in. NPT conduit mount base | 855BS-ABN | 855BM-ABN | 855BL-ABN |
| | Tube mount base | 855BS-ABT | 855BM-ABT | 855BL-ABT |
|  | **Miscellaneous Accessories and Replacement Parts** | **Cat. No.** | **Cat. No.** | **Cat. No.** |
| | Lens gasket (must order in multiples of 5) | 855BS-ALSG | 855BM-ALSG | 855BL-ALSG |
| | Surface mount gaskets (must order in multiples of 5) | 855BS-ASFG | 855BM-ASFG | 855BL-ASFG |
| | Tube mount gaskets (must order in multiples of 5) | 855BM-AMTG | 855BM-AMTG | 855BL-AMTG |
| | Magnetic mount | 855BS-AMM | 855BM-AMM | 855BL-AMM |
| | Rough wall plate [2] | 855BS-AWP | 855BM-AWP | 855BL-AWP |
| | Vertical bracket | 855BS-AVM | 855BM-AVM | 855BL-AVM |
| | Screws and washers for rough wall plate and magnetic mount | 855BS-ASCW | 855BM-ASCW | |
| | Bonding kit (required for bonding between conduit connections) | 855BM-ABK | | |

(1) When used outdoors surface mount base must be installed with rough wall plate for UL Type 4/4X/13 rating.
(2) Required for UL Type 4/4X/13 rating when using surface mount base outdoors.

## Specifications

### Table 46 - Technical

| Attribute | | Value |
|---|---|---|
| Housing | Base material | Polycarbonate |
| | Lenses (all) | Polycarbonate, red, amber, yellow, green, blue, and clear |
| | Pole mount base | 90 mm: polycarbonate<br>120 mm and 160 mm: aluminum die-cast, powder-coated |
| | Bracket | Powder-coated steel |
| Protection class | | Type 4/4X/13 (surface mount base must be installed with rough wall plate for Type 4/4X/13 rating), IP65 |
| Terminals (120 mm and 160 mm only) | | Up to 2.5 $mm^2$ (14 AWG) |
| Temperature Ranges | Operating | -25...+60 °C (-13...+140 °F); -25...+50 °C (-13...+122 °F),<br>120 mm and 160 mm steady halogen, and 120/240V AC single-color LED |
| | Storage | -25...+85 °C (-13...+185 °F) |
| Mounting | Horizontal surfaces: | Indoor — direct to the surface, outdoor — with additional metal plate between surface and base part |
| | Vertical surfaces | With bracket, for indoor and outdoor |
| | Tube or NPT conduit | For indoor and outdoor |

## Table 47 - Electrical and Mechanical

| Attribute | | Steady Halogen | | | Flashing Halogen | | | Strobe | | | Rotating Light | | |
|---|---|---|---|---|---|---|---|---|---|---|---|---|---|
| | | 160 mm | 120 mm | 90 mm | 160 mm | 120 mm | 90 mm | 160 mm | 120 mm | 90 mm | 160 mm | 120 mm | 90 mm |
| Halogen bulb | [W] | 50 | 35 | 20 | 50 | 35 | 20 | – | – | – | 50 | 35 | 20 |
| Bulb socket | | GY6.35 | GY6.35 | GY6.35 | GY6.35 | GY6.35 | GY6.35 | – | – | – | GY6.35 | GY6.35 | GY6.35 |
| Strobe energy | [J] | – | – | – | – | – | – | 31 | 15 | 7 | – | – | – |
| Xenon strobe tube | | – | – | – | | | | Helical | Helical | Helical | – | – | – |
| Strobe tube socket | | – | – | – | | | | Terminals | Terminals | Terminals | – | – | – |
| Flashing/strobe frequency | [Hz] | – | – | – | 1 | 1 | 1 | 1 | 1 | 1 | – | – | – |
| Rotating speed (selectable via jumper wire) | [rpm] | – | – | – | – | – | – | – | – | – | 90/180 | 90/180 | 90/180 |
| Nominal current [A] | 12V AC/DC | 4 | 2.9 | 1.6 | 4.2 | 3 | 1.6 | – | – | – | 4.2 | 3.2 | 1.8 |
| | 24V AC/DC | 2.1 | 1.5 | 0.8 | 2.1 | 1.5 | 0.8 | 1.9 | 1.3 | 0.48 | 2.3 | 1.7 | 0.95 |
| | 110/120V AC, 50/60 Hz | 0.42 | 0.29 | 0.2 | 0.42 | 0.3 | 0.2 | 0.7 | 0.32 | 0.21 | 0.58 | 0.32 | 0.30 |
| | 230/240V AC, 50 Hz | 0.21 | 0.15 | 0.09 | 0.21 | 0.15 | 0.09 | 0.35 | 0.15 | 0.12 | 0.39 | 0.17 | 0.27 |
| Weight [g] | Surface mount | 900 | 500 | 251 | 900 | 500 | 251 | 900 | 500 | 296 | 900 | 500 | 378 |
| | Tube mount | 900 | 500 | 424 | 900 | 500 | 424 | 900 | 500 | 469 | 900 | 500 | 551 |

| Attribute | | 90 mm | | |
|---|---|---|---|---|
| | | Single-color LED | Three-color LED | Strobe LED |
| Nominal current [mA] | 24V AC/DC | – | 155 | – |
| | 110/120V AC, 50/60 Hz | – | 100 | 70 |
| | 230/240V AC, 50 Hz | – | 105 | 70 |
| | 24/48V AC/DC, 50/60 Hz | 230...270 (16...60V AC/16...80V DC) | – | 300 (19...52V AC/16...60V DC) |
| | 120/240V AC | 38...43 mA (90...250V AC) | – | – |
| Weight [g] | Surface mount | 250 | | |
| | Tube mount | 450 | | |

## Table 48 - Standards and Certifications

| Attribute | Bulletin 855B – Industrial Round Beacons |
|---|---|
| Standards Compliance | • UL 508<br>• EN/IEC 60947-1<br>• EN/IEC 60947-5-1<br>• CSA C22.2 No. 14 |
| Certifications | • c-UL-us Listed (File No. E14840, Guides NKCR, NKCR7)<br>• CE Marked |

## Approximate Dimensions

Dimensions in millimeters (inches). Dimensions are not intended to be used for manufacturing purposes.

**Figure 5 - Bulletin 855BS — 90 mm Beacon**

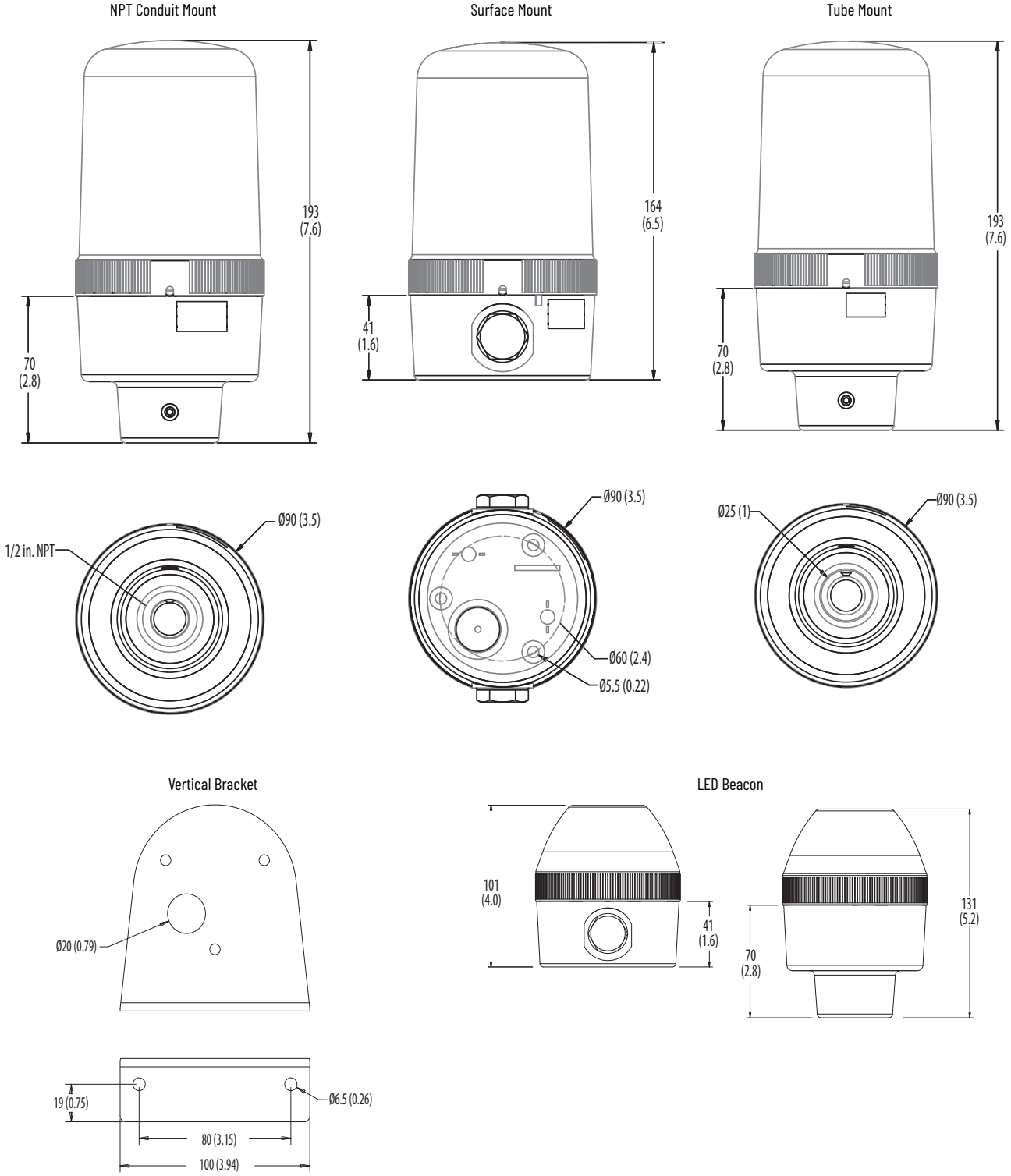

Dimensions in millimeters (inches). Dimensions are not intended to be used for manufacturing purposes.

**Figure 6 - Bulletin 855BM — 120 mm Beacon**

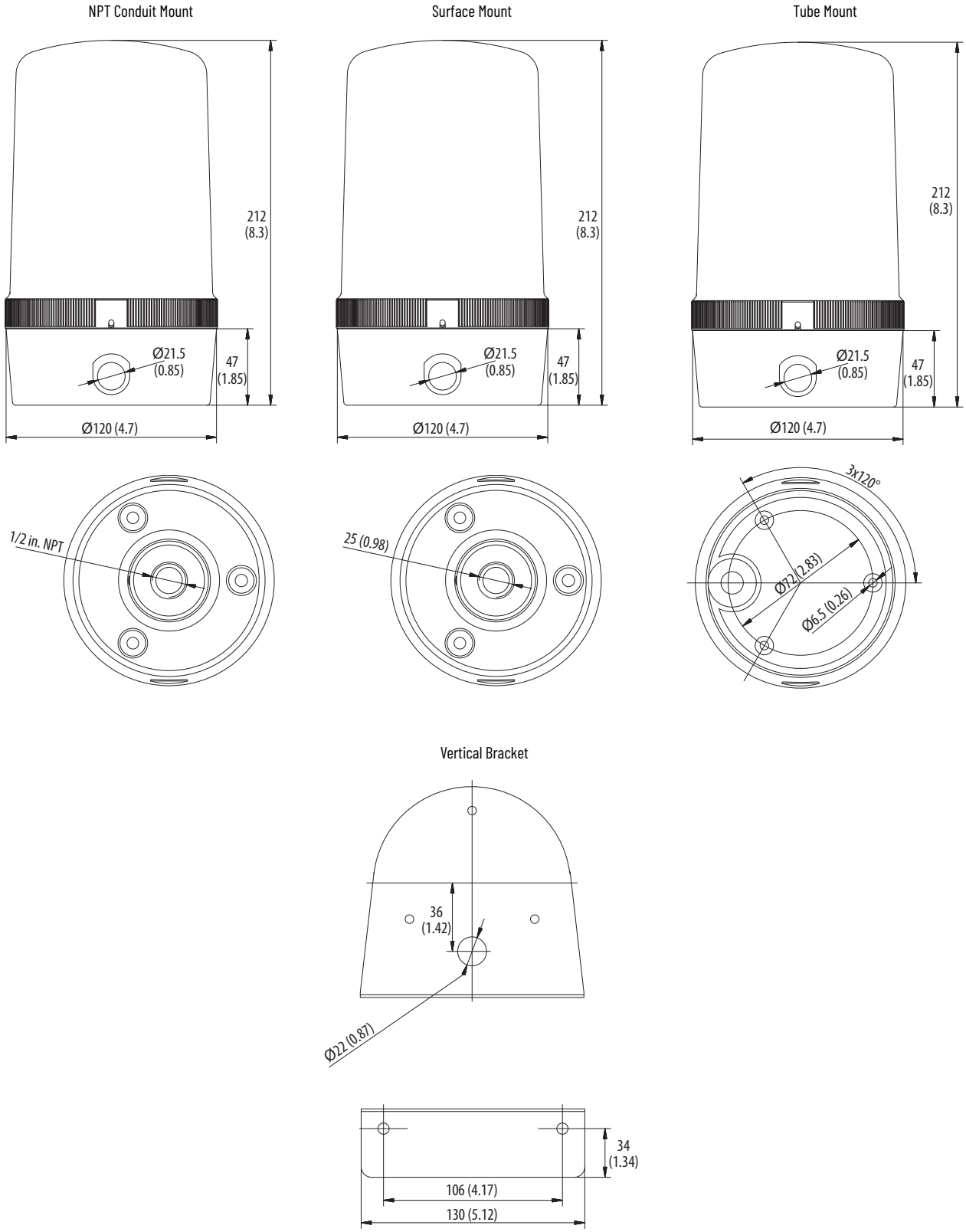

Dimensions in millimeters (inches). Dimensions are not intended to be used for manufacturing purposes.

**Figure 7 - Bulletin 855BL — 160 mm Beacon**

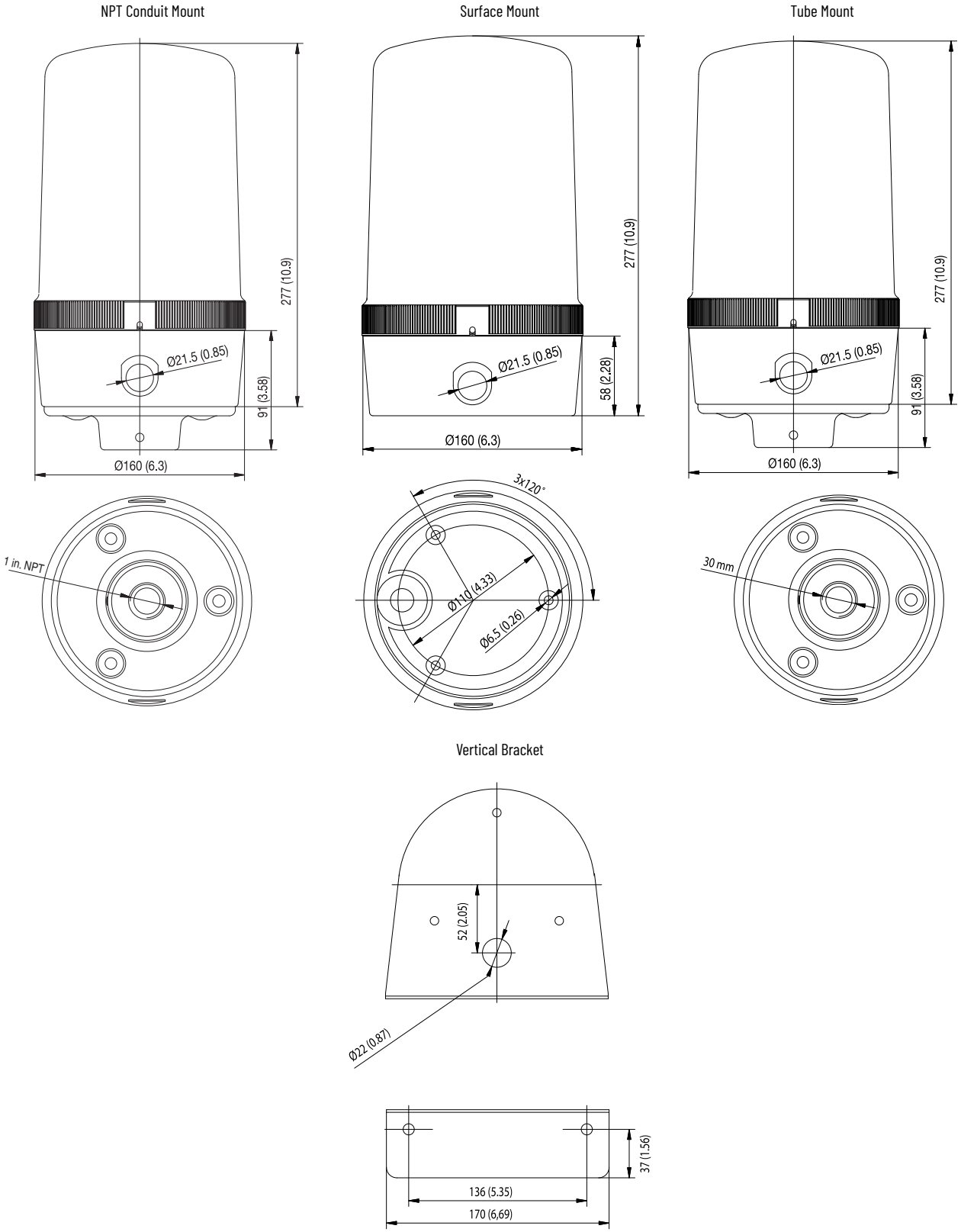

This product line includes 30 mm (855D) and 70 mm (855F) stack lights.

## Bulletin 855D — 30 mm Compact Control Tower Stack Lights

These devices are available with UL Type 4/4X/13, IP65 ratings to meet the most challenging panel and on-machine applications.

### Pre-assembled and Pre-wired Tower Lights, 1...5 Modules

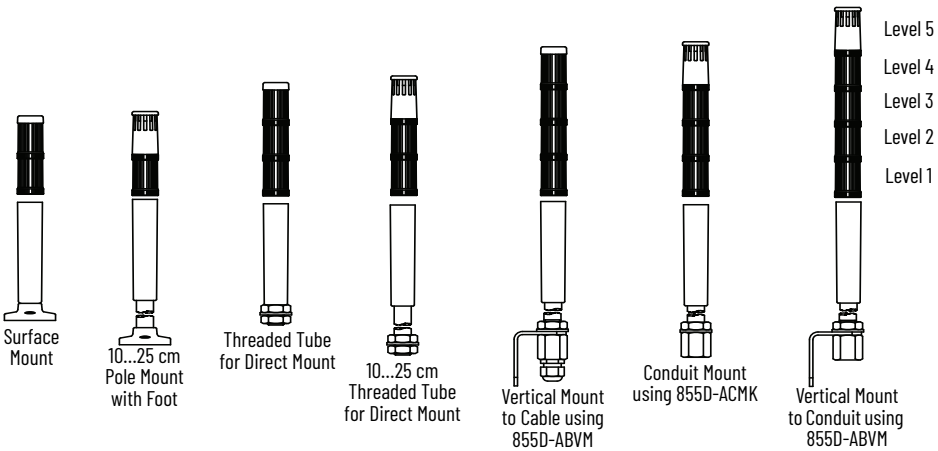

| 855D | - | P00 | | SC20 | B | 24 | Y | 3 | Y | 4 | Y | 5 | L | 7 | P | 1 |
|---|---|---|---|---|---|---|---|---|---|---|---|---|---|---|---|---|
| | | a | b | c | d | e | f | g | f | g | f | g | f | g | f | g |
| | | | | | | | (Level 1, f+g) | | (Level 2, f+g) | | (Level 3, f+g) | | (Level 4, f+g) | | (Level 5, f+g) | |

| a | |
|---|---|
| **Base Type** | |
| **Code** | **Description** |
| P00 | Surface mount |
| P10 | 10 cm aluminum pole mount with foot |
| P25 | 25 cm aluminum pole mount with foot |
| T00 | 0 cm M20 metric threaded tube for direct mount |
| T10 | 10 cm M20 metric threaded tube for direct mount |
| T25 | 25 cm M20 metric threaded tube for direct mount |
| Q10 | 10 cm quick release mount pole |
| Q25 | 25 cm quick release mount pole |

| b | |
|---|---|
| **Network Option** | |
| **Code** | **Description** |
| Blank | No network option |

| c | |
|---|---|
| **Cable Connector and Length (1)** | |
| **Code** | **Description** |
| SC20 | Stranded cable, 2 m (6.6 ft), yellow jacket |
| Blank | No cable (only for Q10 or Q25 base types) |

(1) The SC20 cable must be ordered for all bases, except the Q10 and Q25 bases.

| d | |
|---|---|
| **Housing Color** | |
| **Code** | **Description** |
| B | Black |
| G | Gray |

| e | |
|---|---|
| **Voltage** | |
| **Code** | **Description** |
| 24 | 24V AC/DC |
| 10 | 120V AC |
| 20 | 240V AC |

| f | |
|---|---|
| **Module Type (1) (2)** | |
| **Code** | **Description** |
| Y | Steady LED |
| L | Flashing LED |
| C | Piezo sound alarm, continuous tone |
| P | Piezo sound alarm, pulsing tone |
| Q | Dual-circuit piezo sound alarm (3) |

| g | |
|---|---|
| **Lens Color/Sound** | |
| **Code** | **Description** |
| 1 | Sound module |
| 3 | Green |
| 4 | Red |
| 5 | Amber |
| 6 | Blue |
| 7 | Clear |
| 8 | Yellow |

(1) Sound module types (C, P, Q) must be on the top-most level, they must be configured with Lens Color/Sound Code 1, and only one sound module is allowed per assembly.
(2) Light module types (Y, L) can only be configured with Lens Color/Sound Codes 3, 4, 5, 6, 7, or 8.
(3) If the dual-circuit sound module (Q) is selected, the maximum number of light modules that are allowed is three (two circuits are required for the dual-circuit sound module).

# Accessories

| | Description | | Cat. No. |
|---|---|---|---|
| 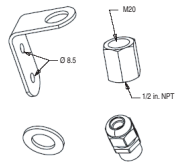 | Vertical Mount Kit<br>Includes the following:<br>• L-bracket<br>• Thread adapter<br>• Black cable gland (1/2 in. NPT)<br>• Plastic washer | | 855D-ABVM |
| 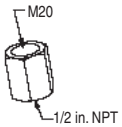 | Conduit Mount Kit<br>M20 to 1/2 in. NPT thread adapter | | 855D-ACMK |
| 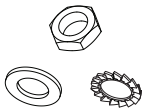 | Direct Mount Kit<br>Includes the following:<br>• M20 nut<br>• Plastic washer<br>• Metal lock washer | | 855D-ARDM |
| | Base Foot Gasket (Bag of 5) | | 855D-APFG |
| | Mounting Screw Washer Kit<br>Replacement flat washers are used to provide a seal where the mounting screw meets the pole base.<br>(1 kit includes 20 pieces) | | 855T-AMSG |
| | Field-installable 4-pin DC Micro style terminal chamber.<br>For additional chamber style terminals, see https://ab.rockwellautomation.com/Connection-Devices/Cables-and-Cordsets. | | 871A-TS4-DM |
| | **Description** | **Color** | **Cat. No.** |
| | Locking ring for Bulletin 854J, 855D, and 855E quick release bases | Black | 855D-ABQLR |
| | Locking ring for quick release base | Gray | 855D-AGQLR |
| | Internal gasket for quick release base (order quantity of 1 and receive bag of five gaskets) | | 855D-AQG |
| | Quick-release mounting base with gasket | | 855D-AQMB |

# Specifications

## Table 49 - Mechanical

| Standard Bases | | Based on the weight and style of mounting; tower lights are subject to damage from shock and vibration. The following are reference guidelines for maximum acceptable conditions. | |
|---|---|---|---|
| | | Shock [G] | Vibration [G] |
| Surface-mount base or 10cm or 25 cm aluminum pole base | 1 module stack | 150 | 2.5 |
| | 3 module stack | 45 | 2.5 |
| | 5 module stack | 35 | 2.0 |

## Table 50 - Environmental

| Attribute | | Value |
|---|---|---|
| Ingress ratings | Light modules | IP65/UL Type 4/4X/13 |
| | Sound modules | IP65/UL Type 4/4X/13 |
| | Surface, pole, vertical, tube mount bases | IP65/UL Type 4/4X/13 |
| Temperature ranges | Operating | -25...+50 °C (-13...+122 °F) |
| | Storage | -25...+85 °C (-13...+185 °F) |

## Table 51 - Materials

| Part | Material |
|---|---|
| Bases, caps, lens covers, sound module housings | Polycarbonate |
| Rubber seals and gaskets | Nitrile rubber |
| Pole (for aluminum pole assembly) | Aluminum |
| Pole base footing (for aluminum pole base) | Polycarbonate |
| Insulation sleeve (for pole insulation) | PVC |
| Mounting screw washers | Polyamide |

## Table 52 - Estimated Light Output(1)

| Attribute | Estimated Light Output [mcd] |
|---|---|
| Steady, flashing, red | 1000 |
| Steady, flashing, amber | 800 |
| Steady, flashing, green | 1500 |
| Steady, flashing, yellow | 700 |
| Steady, flashing, blue | 250 |
| Steady, flashing, white | 1000 |

(1) Light output values are calculated from the LED Data Sheet and show typical values of luminous density. These values are not exact because the knurling in the lens affects the light distribution and because the viewing angle of the LED that directly relates to the Cd output value, is not identical for all LEDs.

## Table 53 - Operating Voltage

| Device | Operating Voltage | | |
|---|---|---|---|
| | 24V AC/DC | 120V AC | 240V AC |
| Light modules and sound modules | 24V AC/DC (±10%) | 110V AC, 50 Hz (±10%)<br>120V AC, 60 Hz (±10%) | 230V AC, 50 (±10%)<br>240V AC, 60 (±10%) |

## Table 54 - Lamp Life Ratings (Design Life) Average Life Under Static, No Vibration, Conditions

| Device | Lamp Life Rating | | |
|---|---|---|---|
| | 24V AC/DC | 120V AC | 240V AC |
| LED modules | 100,000 hr | | |
| Sound modules | 20,000 hr | | |

### Table 55 - Current Consumption

| Device | | Current Consumption [mA] | | |
|---|---|---|---|---|
| | | 24V AC/DC | 120V AC | 240V AC |
| Light modules | Steady or flashing LED | 20 | 22 | 21 |
| Piezo-style sound modules | Single- and dual-circuit | 40 | 22 | 21 |

### Table 56 - Flashing Frequency (Light Only Modules)

| Device | Flashing Frequency |
|---|---|
| Flashing LED modules | Approximately 2 Hz |

### Table 57 - Decibel Rating (Sound Modules) (1)

| Device | Decibel Rating |
|---|---|
| Piezo sound module | 85 dB(A) (+2 dB/-5 dB) |

(1) All dB(A) ratings are determined at a distance of 1 m (3.3 ft) from the sound module.

### Table 58 - Leakage Current Impact

| |
|---|
| All light and sound modules can absorb up to 3 mA of leakage current from solid-state outputs without module activation. |

### Table 59 - Standards and Certifications

| Attribute | Bulletin 855D — 30 mm Compact Control Tower Stack Lights |
|---|---|
| Standards compliance | • UL 508<br>• CSA C22.2 No. 14<br>• EN/IEC 60947-1<br>• EN/IEC 60947-5-1 |
| Certifications | • c-UL-us Listed (File No. E14840, Guides NKCR, NKCR7) |

## Approximate Dimensions

Dimensions in millimeters (inches). Dimensions are not intended to be used for manufacturing purposes.

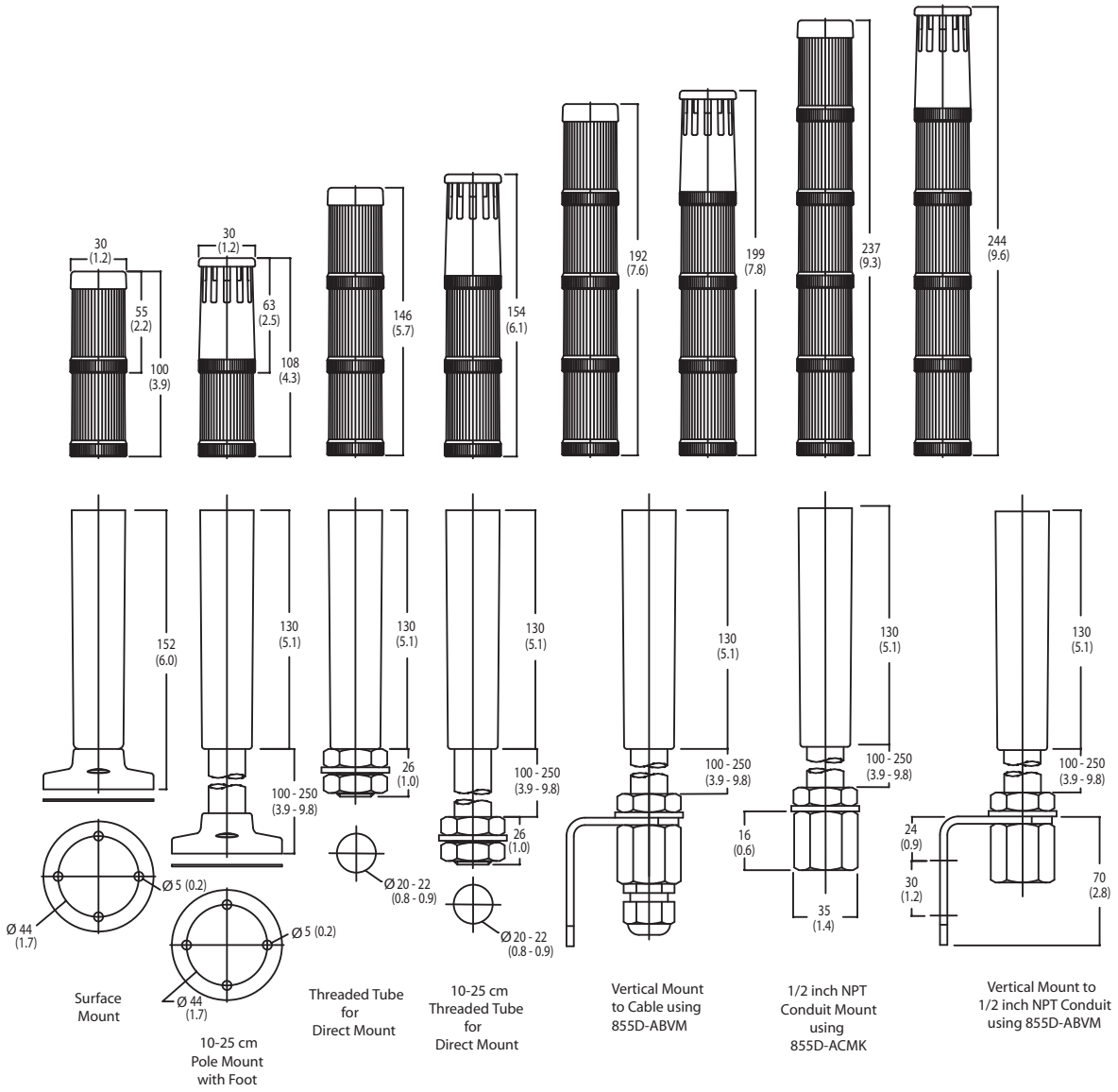

# Bulletin 855F — 70 mm Compact Control Tower Stack Lights

These devices are available with UL Type 4/4X/13, IP65 ratings to meet the most challenging panel and on-machine applications.

## Pre-assembled and Pre-wired Tower Lights, 1...5 Modules

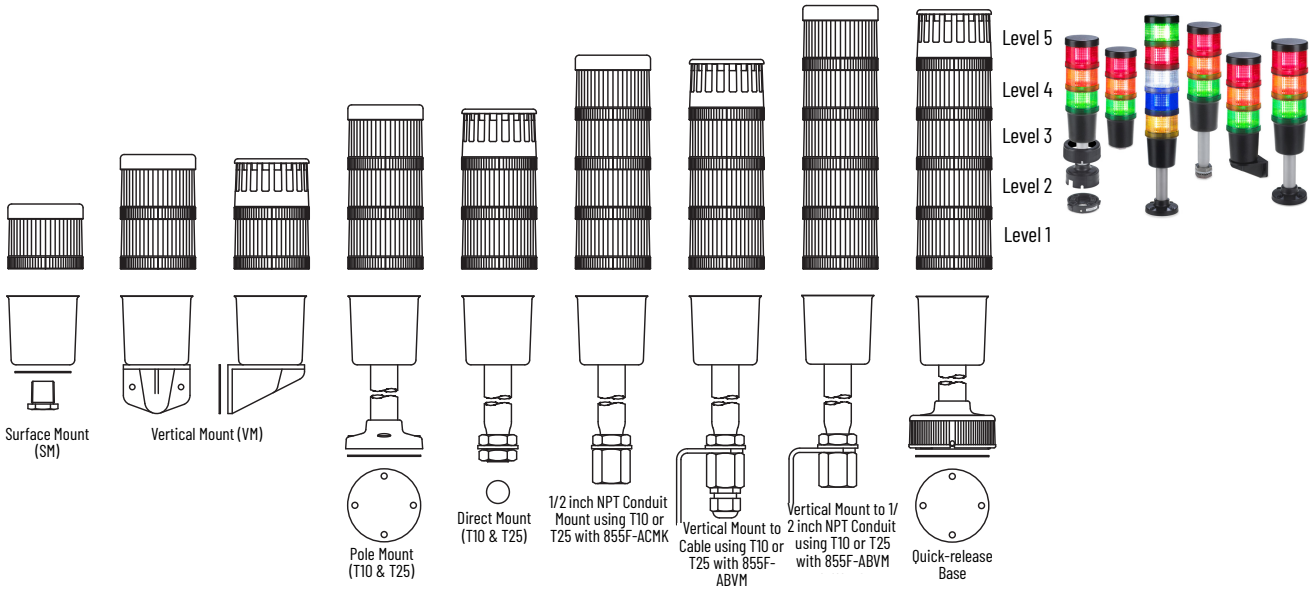


| 855F | - | P10 | SC20 | B | 24 | Y | 3 | Y | 4 | Y | 5 | L | 7 | P | 1 |
|---|---|---|---|---|---|---|---|---|---|---|---|---|---|---|---|
| | | a | b | c | d | e | f | e | f | e | f | e | f | e | f |
| | | | | | | (Level 1, e+f) | | (Level 2, e+f) | | (Level 3, e+f) | | (Level 4, e+f) | | (Level 5, e+f) | |

| a | |
|---|---|
| **Base Type** | |
| **Code** | **Description** |
| SB | Surface mount with 1/2 in. NPT threaded connector and mounting nut |
| P10 | 10 cm aluminum pole mount with foot |
| P25 | 25 cm aluminum pole mount with foot |
| T10 | 10 cm threaded tube for direct mount |
| T25 | 25 cm threaded tube for direct mount |
| VM | Vertical mount |
| Q10 | 10 cm quick release mount pole |
| Q25 | 25 cm quick release mount pole |

(1) The SC20 cable must be ordered for all bases, except the Q10 and Q25 bases.

| b | |
|---|---|
| **Cable Connector and Length (1)** | |
| **Code** | **Description** |
| SC20 | Stranded cable, 2 m (6.6 ft), yellow jacket |
| Blank | No cable (only for Q10 or Q25 base types) |

| c | |
|---|---|
| **Housing Color** | |
| **Code** | **Description** |
| B | Black |

| d | |
|---|---|
| **Voltage** | |
| **Code** | **Description** |
| 24 | 24V AC/DC |
| 10 | 120V AC |
| 20 | 240V AC |

| e | |
|---|---|
| **Module Type (1) (2)** | |
| **Code** | **Description** |
| Y | Steady LED |
| L | Flashing LED |
| C | Piezo sound alarm, continuous tone |
| P | Piezo sound alarm, pulsing tone |
| Q | Dual-circuit piezo sound alarm (3) |

| f | |
|---|---|
| **Lens Color/Sound** | |
| **Code** | **Description** |
| 1 | Sound module |
| 3 | Green |
| 4 | Red |
| 5 | Amber |

| f, cont'd. | |
|---|---|
| **Lens Color/Sound** | |
| **Code** | **Description** |
| 6 | Blue |
| 7 | Clear |
| 8 | Yellow |

(1) Sound module types (C, P, Q) must be on the top-most level, they must be configured with Lens Color/Sound Code 1, and only one sound module is allowed per assembly.
(2) Light module types (Y, L) can only be configured with Lens Color/Sound codes 3, 4, 5, 6, 7, or 8.
(3) If the dual-circuit sound module (Q) is selected, the maximum number of light modules that are allowed is three (two circuits are required for the dual-circuit sound module).

## Accessories

| | Description | Cat. No. |
|---|---|---|
| 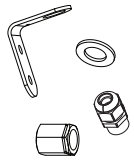 | Vertical Mount Kit<br>Includes the following:<br>• L-bracket<br>• Thread adapter (G1/2 in. to 1/2 in. NPT)<br>• Black cable gland (1/2 in. NPT)<br>• Plastic washer | 855F-ABVM |
| 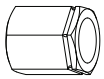 | Conduit Mount Kit<br>G1/2 in. to 1/2 in. NPT thread adapter | 855F-ACMK |
| 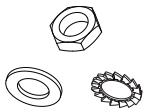 | Direct Mount Kit<br>Includes the following:<br>• G1/2 in. nut<br>• Plastic washer<br>• Metal lock washer | 855F-ARDM |
| 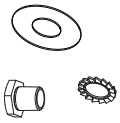 | Surface Mount Kit<br>Includes the following:<br>• Threaded connector (1/2 in. NPT)<br>• Surface-mount gasket<br>• Lock washer | 855F-ASMK |
| | Mounting Screw Washer Kit<br>Replacement flat washers are used to provide a seal where the mounting screw meets the pole base.<br>(1 kit includes 20 pieces) | 855T-AMSG |
| | Field-installable 4-pin DC Micro style terminal chamber.<br>For additional chamber style terminals, see<br>https://www.rockwellautomation.com/en-us/products/hardware/allen-bradley/connection-devices/cables-and-cordsets.html. | 871A-TS4-DM |

# Specifications

## Table 60 - Mechanical

| Standard Bases | | Based on the weight and style of mounting; tower lights are subject to damage from shock and vibration. The following are reference guidelines for maximum acceptable conditions. | |
|---|---|---|---|
| | | Shock [G] | Vibration [G] |
| Surface-mount base or 10 cm or 25 cm aluminum pole base | 1 module stack | 150 | 2.5 |
| | 3 module stack | 45 | 2.5 |
| | 5 module stack | 35 | 2.0 |

## Table 61 - Environmental

| Attribute | | Value |
|---|---|---|
| Ingress ratings | Light modules | UL Type 4/4X/13, IP65 |
| | Sound modules | UL Type 4/4X/13, IP65 |
| | Surface, pole, vertical, tube mount bases | UL Type 4/4X/13, IP65 |
| Temperature ranges | Operating | -25...+60 °C (-13...+140 °F) |
| | Storage | -25...+85 °C (-13...+185 °F) |

## Table 62 - Materials

| Part | Material |
|---|---|
| Bases, caps, lens covers, sound module housings | Polycarbonate |
| Rubber seals and gaskets | Nitrile rubber |
| Pole (for aluminum pole assembly) | Aluminum |
| Pole base footing (for aluminum pole base) | Polycarbonate |
| Insulation sleeve (for pole insulation) | PVC |
| Mounting screw washers | Polyamide |

## Table 63 - Estimated Light Output (1)

| Attribute | Estimated Light Output [mcd] |
|---|---|
| Steady, flashing, Red | 1000 |
| Steady, flashing, amber | 800 |
| Steady, flashing, green | 1500 |
| Steady, flashing, yellow | 700 |
| Steady, flashing, blue | 250 |
| Steady, flashing, white | 1000 |

(1) Light output values are calculated from the LED Data Sheet and show typical values of luminous density. These values are not exact because the knurling in the lens affects the light distribution and because the viewing angle of the LED that directly relates to the Cd output value, is not identical for all LEDs.

## Table 64 - Operating Voltage

| Device | Operating Voltage | | |
|---|---|---|---|
| | 24V AC/DC | 120V AC | 240V AC |
| Light modules and sound modules | 24V AC/DC (±10%) | 110V AC, 50 Hz (±10%)<br>120V AC, 60 Hz (±10%) | 230V AC, 50 Hz (±10%)<br>240V AC, 60 Hz (±10%) |

## Table 65 - Lamp Life Ratings (Design Life) Average Life Under Static, No Vibration, Conditions

| Device | Lamp Life Rating | | |
|---|---|---|---|
| | 24V AC/DC | 120V AC | 240V AC |
| LED modules | 100,000 hr | | |
| Sound modules | 20,000 hr | | |

### Table 66 - Current Consumption

| Device | | Current Consumption [mA] | | |
|---|---|---|---|---|
| | | 24V AC/DC | 120V AC | 240V AC |
| Light modules | Steady or flashing LED | 20 | 22 | 21 |
| Piezo-style sound modules | Single- and dual-circuit | 53 | 22 | 21 |

### Table 67 - Flashing Frequency (Light Only Modules)

| Device | Flashing Frequency |
|---|---|
| Flashing LED modules | Approximately 2 Hz |

### Table 68 - Decibel Rating (Sound Modules) (1)

| Device | Decibel Rating |
|---|---|
| Piezo sound module | 100 dB(A) (+2 dB/-5 dB) |

(1) All dB(A) ratings are determined at a distance of 1 m (3.3 ft) from the sound module.

### Table 69 - Leakage Current Impact

| |
|---|
| All light and sound modules can absorb up to 3 mA of leakage current from solid-state outputs without module activation. |

### Table 70 - Standards and Certifications

| Attribute | Bulletin 855F — 70 mm Compact Control Tower Stack Lights |
|---|---|
| Standards compliance | • UL 508<br>• CSA C22.2 No. 14<br>• EN/IEC 60947-1<br>• EN/IEC 60947-5-1 |
| Certifications | • c-UL-us Listed (File No. E14840, Guides NKCR, NKCR7)<br>• CE Marked |

## Approximate Dimensions

Dimensions in millimeters (inches). Dimensions are not intended to be used for manufacturing purposes.

**Figure 8 - Assembled Stacks**

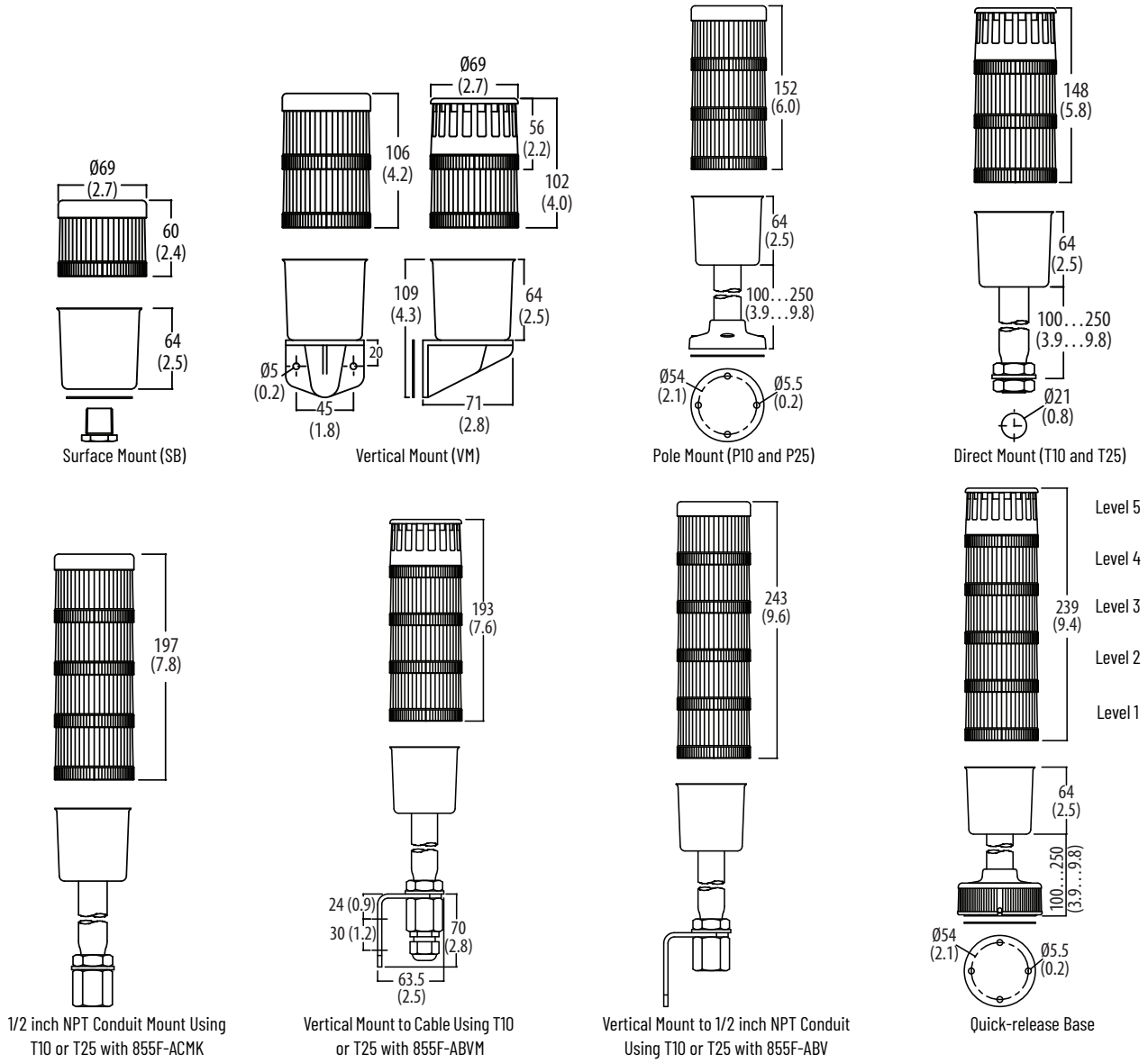

This product line includes 40 mm (854J) and 60 mm (854K) stack lights.

## Bulletin 854J – 40 mm Control Tower Stack Lights

Steady LED Module

These devices provide reliable, high-performance, high-visibility machine multi-status indication in a cost-effective package. They feature IP66 enclosure rating and is rated for indoor and outdoor use, which makes them an ideal signaling solution for a broad range of applications. With a wide variety of mounting bases available, they can be installed in any orientation – vertical, sideways, or upside-down – to best suit the application. They can be preassembled to save time or ordered as separate light and sound modules for customized field assembly.

### Light Modules

| 854J | - | 10 | TL | 4 |
|---|---|---|---|---|
| | | a | b | c |

| a | |
|---|---|
| Voltage | |
| Code | Description |
| 00 | 0...250V AC/DC (no-lamp module) (1) |
| 24 | 24V AC/DC (2) |
| 10 | 120V AC (2) |
| 20 | 240V AC (2) |

| b | |
|---|---|
| Light Module Type | |
| Code | Description |
| XN | Steady no lamp (3) |
| TL | Steady LED |
| GL | Flashing LED |
| BL | LED strobe, single flash |

| c | |
|---|---|
| Lens Color | |
| Code | Description |
| 3 | Green |
| 4 | Red |
| 5 | Amber |
| 6 | Blue |
| 7 | Clear |
| 8 | Yellow |

(1) Can only be selected with module type XN, voltage code 00. Accepts 4 W socket mount incandescent lamp types only.
(2) Not valid with module type XN.
(3) Incandescent lamps (catalog numbers 854J-L24, 854J-L10, and 854J-L20) must be purchased separately.

| Voltage | Color | Steady Incandescent | Steady LED | Flashing LED | Strobe LED |
|---|---|---|---|---|---|
| | | Cat. No. (1) | Cat. No. | Cat. No. | Cat. No. |
| 0...250V AC/DC | Green | 854J-00XN3 | – | – | – |
| | Red | 854J-00XN4 | – | – | – |
| 24V AC/DC | Green | – | 854J-24TL3 | 854J-24GL3 | 854J-24BL3 |
| | Red | – | 854J-24TL4 | 854J-24GL4 | 854J-24BL4 |
| | Amber | – | 854J-24TL5 | 854J-24GL5 | 854J-24BL5 |
| 120V AC | Green | – | 854J-10TL3 | 854J-10GL3 | 854J-10BL3 |
| | Red | – | 854J-10TL4 | 854J-10GL4 | 854J-10BL4 |
| | Amber | – | 854J-10TL5 | 854J-10GL5 | 854J-10BL5 |
| 240V AC | Green | – | 854J-20TL3 | 854J-20GL3 | 854J-20BL3 |
| | Red | – | 854J-20TL4 | 854J-20GL4 | 854J-20BL4 |
| | Amber | – | 854J-20TL5 | 854J-20GL5 | 854J-20BL5 |

(1) No lamp included; must be ordered separately

## Sound Modules

Sound modules have continuous and pulsing tones selectable via DIP switch. Maximum sound output is 80 dB(A) at 1 meter (3.3 feet).

Sound Module

| 854J | - | B | 10 | SA3 |
|---|---|---|---|---|
| | | a | b | c |

| a | |
|---|---|
| **Housing Color** | |
| **Code** | **Description** |
| B | Black |

| b | |
|---|---|
| **Light Module Type** | |
| **Code** | **Description** |
| 24 | 24V AC/DC |
| 10 | 120V AC |
| 20 | 240V AC |

| c | |
|---|---|
| **Module Type** | |
| **Code** | **Description** |
| SA3 | Single-circuit piezo-style steady/pulsing DIP switch selectable |

| Voltage | Housing Color | Module Type | Cat. No. |
|---|---|---|---|
| 24V AC/DC | Black | Single-circuit sounder, single tone | 854J-B24SA3 |
| 120V AC | | | 854J-B10SA3 |
| 240V AC | | | 854J-B20SA3 |

## Standard Stack Light Bases

Surface-mount Base with External Holes | Vertical-mount Base | Pole-mount Base | Double-sided Base | Threaded Tube Base | 1/2 in. NPT Base | Quick Release Base | Flange Style with M12 Micro Connector (Male)

**854J - B VM C**

a b c

| a | |
|---|---|
| **Housing Color** | |
| **Code** | **Description** |
| B | Black |

| b | |
|---|---|
| **Base Type** (1) | |
| **Code** | **Description** |
| NPT | 1/2 in. NPT |
| VM | Vertical mount |
| SH | Surface mount, preinstalled mounting hardware |
| SF | Surface mount, external mounting holes |
| PM10 | 10 cm (3.9 in.) aluminum pole mount base |
| PM25 | 25 cm (9.8 in.) aluminum pole mount base |
| T10 | 10 cm (3.9 in.) threaded tube (M20) |
| T25 | 25 cm (9.8 in.) threaded tube (M20) |
| DS | Double-sided base (2) |
| Q10 | 10 cm (3.9 in.) quick release base |
| Q25 | 25 cm (9.8 in.) quick release base |
| SFQD5 | Flange-style base with M12 (5-pin DC) micro connector (3) (4) (5) (6) (7) |

| c | |
|---|---|
| **Cap Option** | |
| **Code** | **Description** |
| C | Cap included |

(1) PM10, PM25, T10, T25, Q10, and Q25 bases have powder-coated aluminum tubes
(2) Double-sided base can accommodate up to ten modules per base that are divided in two groups up to five levels each.
(3) For vertical mounting of the base use Cat. No. 855T-AVM.
(4) Maximum number of levels that are allowed in the stack is four.
(5) For use with Bulletin 889D cordsets.
(6) Cannot be used with 10 cm plastic base extension (Cat. No. 854J-ABBE).
(7) Maximum 250V AC/DC UL / 60V AC/DC IEC.

| Housing Color | Base Type | Cat. No. (1) |
|---|---|---|
| Black | 1/2 in. NPT thread | 854J-BNPTC |
| | Vertical mount | 854J-BVMC |
| | Surface mount — pre-installed hardware | 854J-BSHC |
| | Surface mount — external mounting holes | 854J-BSFC |
| | 10 cm (3.9 in.) aluminum pole mount | 854J-BPM10C |
| | 25 cm (9.8 in.) aluminum pole mount | 854J-BPM25C |
| | 10 cm (3.9 in.) threaded tube (M20) | 854J-BT10C |
| | 25 cm (9.8 in.) threaded tube (M20) | 854J-BT25C |
| | Double-sided base | 854J-BDSC |
| | 10 cm (3.9 in.) quick release base | 854J-BQ10C |
| | 25 cm (9.8 in.) quick release base | 854J-BQ25C |
| | Flange-style base with M12 (5-pin DC) micro connector | 854J-BSFQD5C |

(1) All listed bases include a cap.

# Pre-configured Tower Lights, 1...5 Modules

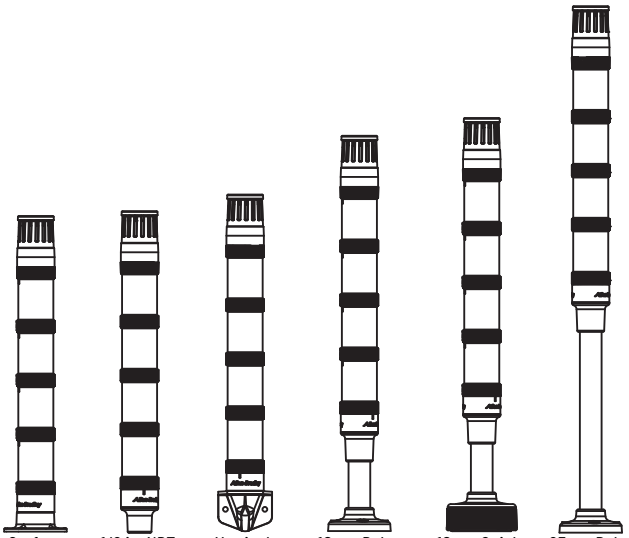

Surface Mount | 1/2 in. NPT Thread | Vertical Mount | 10 cm Pole Mount | 10 cm Quick Release | 25 cm Pole Mount

| 854JC | - | SF | B | 10 | Y | 3 | L | 5 | B | 3 | L | 7 | Y | 6 |
|---|---|---|---|---|---|---|---|---|---|---|---|---|---|---|
| | | a | | b | c | d | c | d | c | d | c | d | c | d |
| | | | | | (Level 1, c+d) | | (Level 2, c+d) | | (Level 3, c+d) | | (Level 4, c+d) | | (Level 5, c+d) | |

| a | |
|---|---|
| **Base Type** [1] | |
| **Code** | **Description** |
| NPT | 1/2 in. NPT |
| VM | Vertical mount |
| SF | Surface mount —external mounting holes |
| P10 | 10 cm (3.9 in.) aluminum pole mount with foot |
| P25 | 25 cm (9.8 in.) aluminum pole mount with foot |
| Q10 | 10 cm (3.9 in.) quick release mount pole |
| Q25 | 25 cm (9.8 in.) quick release mount pole |

| b | |
|---|---|
| **Voltage** | |
| **Code** | **Description** |
| 24 | 24V AC/DC |
| 10 | 120V AC |

| c | |
|---|---|
| **Module Type** | |
| **Code** | **Description** |
| Y | Steady LED |
| L | Flashing LED |
| B | Strobe LED—single flash |
| P | Piezo sound alarm, continuous/pulsing tone |

| d | |
|---|---|
| **Lens Color/Sound** | |
| **Code** | **Description** |
| 1 | Sound module [2] |
| 3 | Green |
| 4 | Red |
| 5 | Amber |
| 6 | Blue |
| 7 | Clear |
| 8 | Yellow |

(1) P10, P25, Q10, Q25 bases have powder-coated aluminum tubes.
(2) Sound module option can only be selected with Module Type option P (Table c). They must be in the top position of the stack.

# Accessories

## Table 71 - Accessories

| | Description | | Cat. No. |
|---|---|---|---|
| | Incandescent Lamps (4 W) | 24V AC/DC | 854J-L24 |
| | | 120V AC | 854J-L10 |
| | | 240V AC | 854J-L20 |
| | Incandescent lamp removal tool | | 800T-N82 |
| | 10 cm plastic base extension, black | | 854J-ABBE |
| | Plastic vertical bracket for pole foot, black<br>(can be used with Bulletin 855T, 855E, 854K, and 855F pole bases) | | 854J-ABPB |
| | O-rings for lenses | | 854J-ALSG |
| | O-rings for bases | | 854J-ABSG |
| 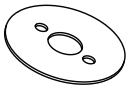 | Gasket for SH surface mount bases | | 854J-ASG2 |
| | Upper base with terminal block, black | | 854J-ABUB |
| 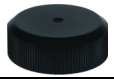 | Cap, black | | 854J-ABCAP |
| | Conduit mount adapter for threaded tube base (1/2 in. NPT to M20x1.5) | | 854J-ACMK |
| | L-bracket for threaded tube base (vertical mount kit) | | 854J-ABVM |
| | Direct mount kit for threaded tube base | | 854J-ARDM |

## Table 72 - Replacement Parts

| | Description | Cat. No. |
|---|---|---|
| | Vertical Mount Gasket<br>Replacement flat gasket is to be placed between the mounting surface and the vertical mount base (Cat. No. 854J-BVMC). | 855T-AVFG |
| | Pole Foot Gasket<br>Replacement flat gasket is to be placed between the mounting surface and the pole base bottom foot. (Must order multiples of 5.)<br>For use with Cat. No. 855T-BPM10C and 855T-BPM25C pole bases, Cat. No. 854J-BSFC and 854J-BSFQD5C bases, and Bul. 855T, 855E, 855F, 855D, 854J, and 854K quick release bases. | 855T-APFG |
| | Mounting Screw Washer Kit<br>Replacement flat washers are used to provide a seal where the mounting screw meets the pole base.<br>(1 kit includes 20 pieces) | 855T-AMSG |
| | Locking ring for Bulletin 854J, 855D, and 855E quick release bases | 855D-ABQLR |
| | Internal gasket for quick release base<br>(order quantity of 1 and receive bag of five gaskets) | 855D-AQG |
| | Quick-release mounting base with gasket | 855D-AQMB |

# Specifications

## Table 73 - Mechanical

| Standard Bases | | Based on the weight and style of mounting; tower lights are subject to damage from shock and vibration. The following are reference guidelines for maximum acceptable conditions. | |
|---|---|---|---|
| | | Shock [G] | Vibration [G] |
| Surface-mount base or 10 cm (3.9 in.) aluminum pole base | 1 module stack | 50 | 5 |
| | 3 module stack | 50 | 5 |
| | 5 module stack | 40 | 5 |
| Vertical base or 25 cm (9.8 in.) aluminum pole base | 1 module stack | 55 | 5 |
| | 3 module stack | 55 | 5 |
| | 5 module stack | 35 | 5 |
| Recommended wire size | | 0.2...1.5 $mm^2$ (24...16 AWG) | |
| Recommended terminal torque | | Screwless terminal blocks | |

## Table 74 - Environmental

| Attribute | | Value |
|---|---|---|
| Ingress ratings | Light modules | UL Type 4/4X/13, IP66 |
| | Sound modules | |
| | Surface, vertical, tube mount bases | |
| | Pole-mount bases | |
| | Flange-style base with M12 micro connector (1) | |
| Temperature ranges | Operating | -30...+60 °C (-22...+140 °F)<br>For Cat. No. 854J-BSFQD5C only: -30...+45 °C (-22...+113 °F) |
| | Storage | -30...+85 °C (-22...+185 °F) |

(1) UL Type 1 when used with Cat. No. 855T-AVM mounting bracket.

## Table 75 - Materials

| Part | Material |
|---|---|
| Bases, caps, lens covers, sound module housings | Polycarbonate |
| Lamp socket | Polycarbonate |
| Rubber seals and gaskets | Nitrile rubber |
| Pole (for aluminum pole assembly) | Aluminum |
| Pole base footing (for aluminum pole base) | Polycarbonate |
| Mounting screw washers | Polypropylene |

### Table 76 - Estimated Light Output

| Device | | Estimated Light Output [mcd] | |
|---|---|---|---|
| | | 24V AC/DC | 120V AC, 240V AC |
| Strobe LED | Red | 4430 | 3915 |
| | Green | 4216 | 4080 |
| | Amber | 4430 | 3915 |
| | Blue | 1673 | 1619 |
| | White | 4464 | 4320 |
| | Yellow | 3715 | 3283 |
| Steady/flashing LED | Red | 1793 | 2392 |
| | Green | 1714 | 3400 |
| | Amber | 1793 | 2391 |
| | Blue | 680 | 1349 |
| | White | 1814 | 3600 |
| | Yellow | 1503 | 2006 |

### Table 77 - Operating Voltage

| Device | Operating Voltage | | |
|---|---|---|---|
| | 24V AC/DC | 120V AC | 240V AC |
| Light modules and sound modules | 24V AC/DC (±10%) | 110V AC, 50 Hz (±10%)<br>120V AC, 60 Hz (±10%) | 230V AC, 50 Hz (±10%)<br>240V AC, 60 Hz (±10%) |

### Table 78 - Lamp Life Ratings (Design Life) Average Life Under Static, No Vibration, Conditions

| Device | Lamp Life Rating | | |
|---|---|---|---|
| | 24V AC/DC | 120V AC | 240V AC |
| LED modules | 50,000 hr | | |
| Sound modules | 20,000 hr | | |

### Table 79 - Current Consumption [mA]

| Device | | Current Consumption [mA] | | |
|---|---|---|---|---|
| | | 24V AC/DC | 120V AC | 240V AC |
| Light only modules | Steady LED | 22 (red, amber, and yellow)<br>33 (green, blue, and white) | 30 (red, amber, and yellow)<br>29 (green, blue, and white) | |
| | Flashing LED | 28 (red, amber, and yellow)<br>36 (green, blue, and white) | 30 (red, amber, and yellow)<br>29 (green, blue, and white) | |
| | Strobe LED | 35 (red, amber, and yellow)<br>65 (green, blue, and white) | 10 | |
| Sound modules | Single-tone | 65 | 31 | 32 |

### Table 80 - Flashing Frequency (Light Only Modules)

| Device | Flashing Frequency |
|---|---|
| Flashing LED Modules | Approximately 1.5 Hz; Time On/Time OFF = 1:1 |
| LED Strobe Modules | Approximately 2 Hz (flash duration 1/50,000 second) |

### Table 81 - Decibel Rating (Sound Modules) (1)

| Device | Decibel Rating |
|---|---|
| Single-tone sound module | 80 dB(A) (non-adjustable) |
| Tone frequency | Preset at 2500 Hz |

(1) All dB(A) ratings are determined at a distance of 1 m (3.3 ft) from the sound module.

### Table 82 - Leakage Current Impact

| |
|---|
| All light and sound modules can absorb up to 3 mA of leakage current from solid-state outputs without module activation. |

### Table 83 - Standards and Certifications

| Attribute | Bulletin 854J — 40 mm Control Tower Stack Lights |
|---|---|
| Standards compliance | • UL 508<br>• CSA C22.2 No. 14<br>• EN/IEC 60947-1<br>• EN/IEC 60947-5-1 |
| Certifications | • c-UL-us Listed (File No. E14840, Guides NKCR, NKCR7)<br>• CE Marked<br>• RoHS Compliant |

## Approximate Dimensions

Dimensions in millimeters (inches). Dimensions are not intended to be used for manufacturing purposes.

Light Module

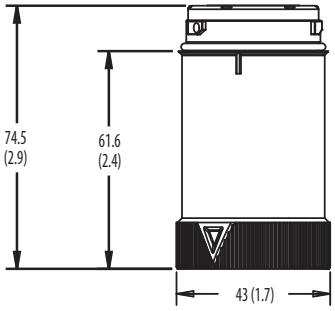


Sound Module

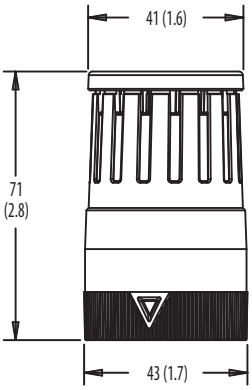


Cap

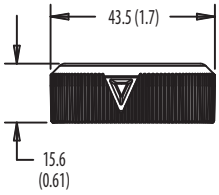


Surface-mount Base

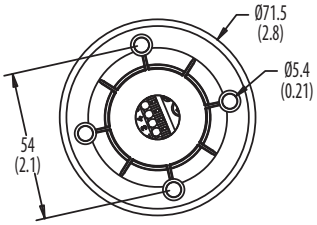


External Mounting Holes

Vertical-mount Base

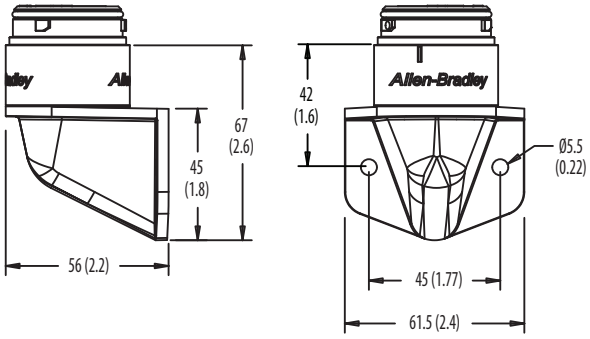


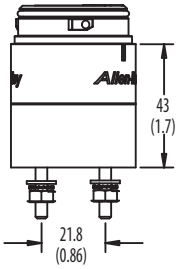


Pre-installed Hardware

Dimensions in millimeters (inches). Dimensions are not intended to be used for manufacturing purposes.

Quick-release Base

10 cm Base

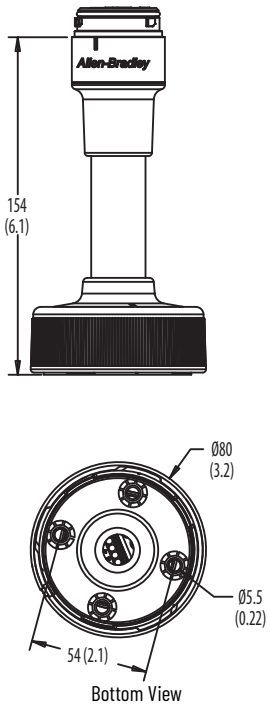


25 cm Base

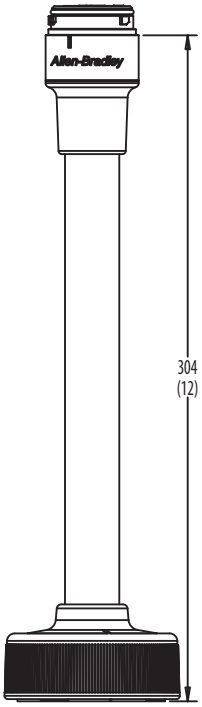


Pole-mount Base

10 cm Base

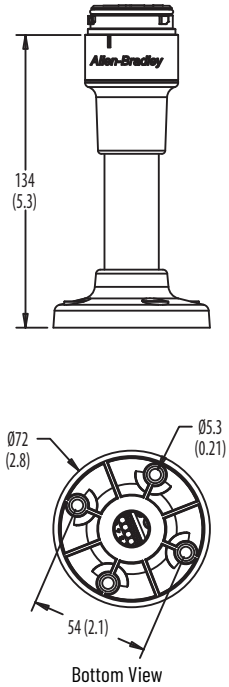


25 cm Base

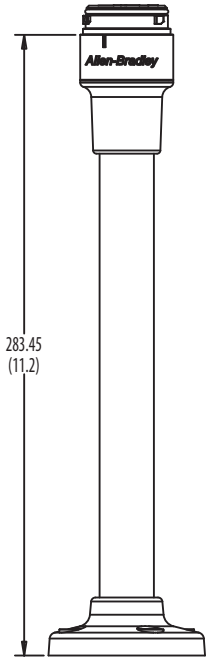


1/2 in. NPT Thread Base

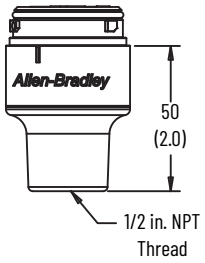


Double-sided Base

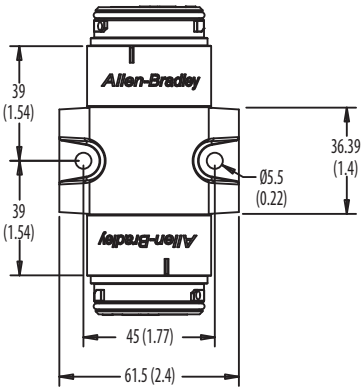


Flange-style Base with M12 Micro Connector (Male)

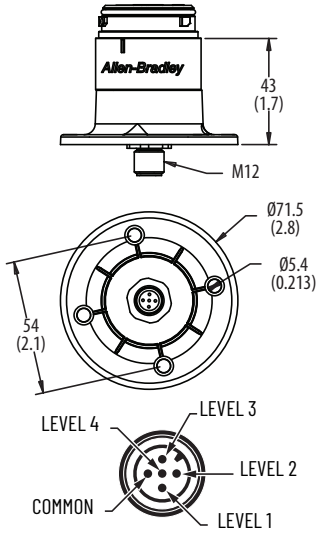


5-pin DC Micro Configuration

# Bulletin 854K — 60 mm Control Tower Stack Lights

Steady LED Module

These devices are designed to communicate application status, alerting you to critical equipment and system needs on the plant floor. They feature an IP66 enclosure rating and is rated for indoor and outdoor use, which makes them an ideal signaling solution for a broad range of applications. With a wide variety of mounting bases available, they can be installed in any orientation — vertical, sideways, or upside-down — to best suit the application. They can be preassembled to save time or ordered as separate light and sound modules for customized field assembly.

## Light Modules

| 854K | - | 10 | TL | 4 |
|---|---|---|---|---|
| | | a | b | c |

| a | |
|---|---|
| Voltage | |
| Code | Description |
| 00 | 0...250V AC/DC (no lamp module) (1) |
| 24 | 24V AC/DC (2) |
| 10 | 120V AC (2) |
| 20 | 240V AC (2) |

| b | |
|---|---|
| Light Module Type | |
| Code | Description |
| XN | Steady no lamp (3) |
| TL | Steady socket-mount LED |
| GL | Flashing socket-mount LED |
| BL | LED strobe, single flash |

| c | |
|---|---|
| Lens Color | |
| Code | Description |
| 3 | Green |
| 4 | Red |
| 5 | Amber |
| 6 | Blue |
| 7 | Clear |
| 8 | Yellow |

(1) Can only be selected with module type XN, voltage code 00. Accepts socket mount incandescent lamp types only.
(2) Not valid with module type XN (Table b).
(3) Incandescent lamps (catalog numbers 854J-L24, 854J-L10, and 854J-L20) must be purchased separately.

| Voltage | Color | Steady Incandescent | Steady LED | Flashing LED | Strobe LED |
|---|---|---|---|---|---|
| | | Cat. No. (1) | Cat. No. | Cat. No. | Cat. No. |
| 0...250V AC/DC | Green | 854K-00XN3 | — | — | — |
| | Red | 854K-00XN4 | — | — | — |
| 24V AC/DC | Green | — | 854K-24TL3 | 854K-24GL3 | 854K-24BL3 |
| | Red | — | 854K-24TL4 | 854K-24GL4 | 854K-24BL4 |
| | Amber | — | 854K-24TL5 | 854K-24GL5 | 854K-24BL5 |
| 120V AC | Green | — | 854K-10TL3 | 854K-10GL3 | 854K-10BL3 |
| | Red | — | 854K-10TL4 | 854K-10GL4 | 854K-10BL4 |
| | Amber | — | 854K-10TL5 | 854K-10GL5 | 854K-10BL5 |
| 240V AC | Green | — | 854K-20TL3 | 854K-20GL3 | 854K-20BL3 |
| | Red | — | 854K-20TL4 | 854K-20GL4 | 854K-20BL4 |
| | Amber | — | 854K-20TL5 | 854K-20GL5 | 854K-20BL5 |

(1) No lamp included; must be ordered separately

## Sound Modules

Sound modules have continuous and pulsing tones selectable via DIP switch. Maximum sound output is 90 dB(A) at 1 m (3.3 ft) and the volume is adjustable.

Sound Module

| 854K | - | B | 10 | SA3 |
|---|---|---|---|---|
| | | a | b | c |

| a | |
|---|---|
| **Housing Color** | |
| **Code** | **Description** |
| B | Black |

| b | |
|---|---|
| **Voltage** | |
| **Code** | **Description** |
| 24 | 24V AC/DC |
| 10 | 120V AC |
| 20 | 240V AC |

| c | |
|---|---|
| **Module Type** | |
| **Code** | **Description** |
| SA3 | Single-circuit/single-tone piezo-style steady/pulsing DIP switch selectable |

| Voltage | Housing Color | Module Type | Cat. No. |
|---|---|---|---|
| 24V AC/DC | Black | Single-circuit sounder, single tone | 854K-B24SA3 |
| 120V AC | | | 854K-B10SA3 |
| 240V AC | | | 854K-B20SA3 |

# Standard Stack Light Bases

Surface-mount Base with External Holes

Vertical-mount Base

Pole-mount Base

Double-sided Base

Threaded Tube Base

1/2 in. NPT Base

Quick-release Base

Flange-style with M12 Micro Connector (Male)

**854K - B VM C**

a b c

| a | |
|---|---|
| **Housing Color** | |
| **Code** | **Description** |
| B | Black |

| b | |
|---|---|
| **Base Type** [1] | |
| **Code** | **Description** |
| NPT | 1/2 in. NPT threading |
| VM | Vertical mount |
| SH | Surface mount, preinstalled mounting hardware |
| SF | Surface mount, external mounting holes |
| PM10 | 10 cm (3.9 in.) aluminum pole-mount base |
| PM25 | 25 cm (9.8 in.) aluminum pole-mount base |
| T10 | 10 cm (3.9 in.) threaded tube (M20) |
| T25 | 25 cm (9.8 in.) threaded tube (M20) |
| DS | Double-sided base [2] |
| Q10 | 10 cm (3.9 in.) quick-release base |
| Q25 | 25 cm (9.8 in.) quick-release base |
| SFQD5 | Flange-style base with M12 (5-pin DC) micro connector[3] [4] [5] [6] [7] |

| c | |
|---|---|
| **Cap Option** | |
| **Code** | **Description** |
| C | Cap included |

(1) PM10, PM25, T10, T25, Q10, and Q25 bases have powder-coated aluminum tubes.
(2) Double-sided base can accommodate up to ten modules per base that are divided in two groups up to five levels each.
(3) For vertical mounting of the base use catalog number 854K-AVM.
(4) Maximum number of levels that are allowed in the stack is four.
(5) For use with Bulletin 889D cordsets.
(6) Cannot be used with 10 cm plastic base extension (catalog number 854K-ABBE).
(7) Maximum 250V AC/DC UL / 60V AC/DC IEC.

| Housing Color | Base Type | Cat. No. [1] |
|---|---|---|
| Black | 1/2 in. NPT thread | 854K-BNPTC |
| | Vertical mount | 854K-BVMC |
| | Surface mount — pre-installed hardware | 854K-BSHC |
| | Surface mount — external mounting holes | 854K-BSFC |
| | 10 cm (3.9 in.) aluminum pole mount | 854K-BPM10C |
| | 25 cm (9.8 in.) aluminum pole mount | 854K-BPM25C |
| | 10 cm (3.9 in.) threaded tube (M20) | 854K-BT10C |
| | 25 cm (9.8 in.) threaded tube (M20) | 854K-BT25C |
| | Double-sided base | 854K-BDSC |
| | 10 cm (3.9 in.) quick release base | 854K-BQ10C |
| | 25 cm (9.8 in.) quick release base | 854K-BQ25C |
| | Flange-style base with M12 (5-pin DC) micro connector | 854K-BSFQD5C |

(1) All listed bases include a cap.

## Preconfigured Tower Lights, 1...5 Modules

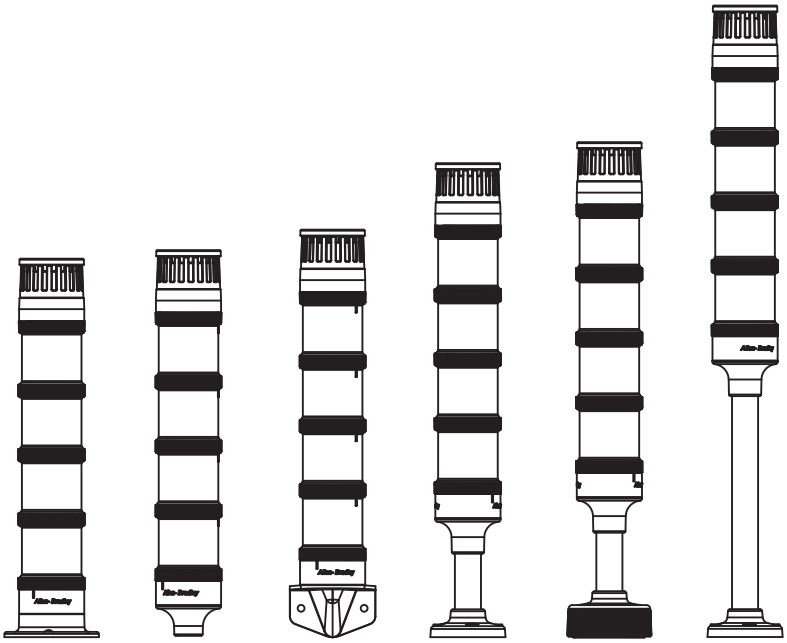

Surface Mount | 1/2 in. NPT Thread | Vertical Mount | 10 cm Pole Mount | 10 cm Quick Release | 25 cm Pole Mount

| 854KC | - | SF | B | 10 | Y | 3 | L | 5 | B | 3 | L | 7 | Y | 6 |
|---|---|---|---|---|---|---|---|---|---|---|---|---|---|---|
| | | a | | b | c | d | c | d | c | d | c | d | c | d |
| | | | | | (Level 1, c+d) | | (Level 2, c+d) | | (Level 3, c+d) | | (Level 4, c+d) | | (Level 5, c+d) | |

| a | |
|---|---|
| **Base Type** [1] | |
| **Code** | **Description** |
| NPT | 1/2 in. NPT |
| VM | Vertical mount |
| SF | Surface mount — external mounting holes |
| P10 | 10 cm aluminum pole mount |
| P25 | 25 cm aluminum pole mount |
| Q10 | 10 cm quick release base |
| Q25 | 25 cm quick release base |

| b | |
|---|---|
| **Voltage** | |
| **Code** | **Description** |
| 24 | 24V AC/DC |
| 10 | 120V AC |

| c | |
|---|---|
| **Module Type** | |
| **Code** | **Description** |
| Y | Steady LED |
| L | Flashing LED |
| B | Strobe |
| P | Single-circuit piezo sound module |

| d | |
|---|---|
| **Lens Color/Sound** | |
| **Code** | **Description** |
| 1 | Sound module [2] |
| 3 | Green |
| 4 | Red |
| 5 | Amber |
| 6 | Blue |
| 7 | Clear |
| 8 | Yellow |

(1) P10, P25, Q10, and Q25 bases have powder-coated aluminum tubes.
(2) Sound module option can only be selected with Module Type option P (Table c). They must be in the top position of the stack.

# Accessories

## Table 84 - Accessories

| | Description | | Cat. No. |
|---|---|---|---|
| | Incandescent Lamps (4 W) | 24V AC/DC | 854J-L24 |
| | | 120V AC | 854J-L10 |
| | | 240V AC | 854J-L20 |
| | Incandescent lamp removal tool | | 800T-N82 |
| | 10 cm plastic base extension, black | | 854K-ABBE |
| | O-rings for lenses | | 854K-ALSG |
| 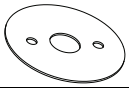 | Gasket for SH surface mount bases | | 854K-ASG2 |
| | Upper base with terminal block, black | | 854K-ABUB |
| | Cap, black | | 854K-ABCAP |
| 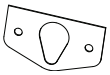 | Gasket for vertical mount bases | | 854K-AVFG |
| | Gasket for surface mount base with external mounting holes | | 854K-ASG4 |
| | Vertical mounting bracket for flange-style base (Cat. No. 854K-BSFQD5C) or surface mount base (Cat. No. 854K-BSFC) | | 854K-AVM |

## Table 85 - Replacement Parts

| | Description | Cat. No. |
|---|---|---|
| | Mounting Screw Washer Kit<br>Replacement flat washers are used to provide a seal where the mounting screw meets the pole base. (1 kit includes 20 pieces) | 855T-AMSG |
| | Pole Foot Gasket<br>Replacement flat gasket is to be placed between the mounting surface and the pole base bottom foot. (Must order multiples of 5.)<br>For use with Cat. No. 855T-BPM10C and 855T-BPM25C pole bases, Cat. No. 854J-BSFC and 854J-BSFQD5C bases, and Bul. 855T, 855E, 855F, 855D, 854J, and 854K quick release bases. | 855T-APFG |
| | Locking ring for Bulletin 854J, 855D, and 855E quick release bases | 855D-ABQLR |
| | Internal gasket for quick release base (order quantity of one and receive bag of five gaskets) | 855D-AQG |
| | Quick-release mounting base with gasket | 855D-AQMB |
| | Conduit mount adapter for threaded tube base (1/2 in. NPT to M20x1.5) | 854J-ACMK |
| | L-bracket for threaded tube base (vertical mount kit) | 854J-ABVM |
| | Direct mount kit for threaded tube base | 854J-ARDM |
| | Plastic vertical bracket for pole foot, black (can be used with Bul. 855T, 855E, 854K, and 855F pole bases) | 854J-ABPB |

# Specifications

## Table 86 - Mechanical

| Standard Bases | | Based on the weight and style of mounting; tower lights are subject to damage from shock and vibration. The following are reference guidelines for maximum acceptable conditions. | |
|---|---|---|---|
| | | Shock [G] | Vibration [G] |
| Surface-mount base with external holes or 10 cm (3.9 in.) aluminum pole base | 1 module stack | 50 | 5 |
| | 3 module stack | 50 | 5 |
| | 5 module stack | 40 | 5 |
| Vertical base or 25 cm (9.8 in.) aluminum pole base | 1 module stack | 55 | 5 |
| | 3 module stack | 55 | 5 |
| | 5 module stack | 35 | 5 |
| Recommended wire size | | 0.2...1.5 $mm^2$ (24...16 AWG) | |
| Recommended terminal torque | | Screwless terminal blocks | |

## Table 87 - Environmental

| Attribute | | Value |
|---|---|---|
| Ingress ratings | Light modules with cap | UL Type 4/4X/13, IP66 |
| | Sound modules | UL Type 4/4X/13, IP66 |
| | Surface, vertical, tube mount bases | UL Type 4/4X/13, IP66 |
| | Pole-mount bases | UL Type 4/4X/13, IP66 |
| | Flange-style base with M12 micro connector(1) | UL Type 4/4X/13, IP66 |
| Temperature ranges | Operating | -30...+60 °C (-22...+140 °F)<br>For Cat. No. 854J-BSFQD5C only: -30...+45 °C (-22...+113 °F) |
| | Storage | -30...+85 °C (-22...+185 °F) |

(1) UL Type 1 when used with Cat. No. 855K-AVM mounting bracket.

## Table 88 - Materials

| Part | Material |
|---|---|
| Bases, caps, lens covers, sound module housings, lenses | Polycarbonate |
| Lamp socket | Polycarbonate |
| Rubber seals and gaskets | Nitrile rubber |
| Pole (for aluminum pole assembly) | Aluminum |
| Pole base footing (for aluminum pole base) | Polycarbonate |
| Mounting screw washers | Polypropylene |

## Table 89 - Light Output

| Device | | Light Output [mcd] | |
|---|---|---|---|
| | | 24V AC/DC | 120V AC, 240V AC |
| Strobe LED | Red | 4430 | 3915 |
| | Green | 4216 | 4080 |
| | Amber | 4430 | 3915 |
| | Blue | 1673 | 1619 |
| | White | 4464 | 4320 |
| | Yellow | 3715 | 3283 |
| Steady/flashing LED | Red | 1793 | 2392 |
| | Green | 1714 | 3400 |
| | Amber | 1793 | 2392 |
| | Blue | 680 | 1349 |
| | White | 1814 | 3600 |
| | Yellow | 1503 | 2006 |

### Table 90 - Operating Voltage

| Device | Operating Voltage | | |
|---|---|---|---|
| | 24V AC/DC | 120V AC | 240V AC |
| Light modules and sound modules | 24V AC/DC (±10%) | 110V AC, 50 Hz (±10%)<br>120V AC, 60 Hz (±10%) | 230V AC, 50 Hz (±10%)<br>240V AC, 60 Hz (±10%) |

### Table 91 - Lamp Life Ratings (Design Life) Average Life Under Static, No Vibration, Conditions

| Device | Lamp Life Rating | | |
|---|---|---|---|
| | 24V AC/DC | 120V AC | 240V AC |
| LED modules | 50,000 hr | | |
| Sound modules | 20,000 hr | | |

### Table 92 - Current Consumption

| Device | | Current Consumption [mA] | | |
|---|---|---|---|---|
| | | 24V AC/DC | 120V AC | 240V AC |
| Light only modules | Steady LED | 22 (red, amber, and yellow)<br>33 (green, blue, and white) | 30 (red, amber, and yellow)<br>29 (green, blue, and white) | |
| | Flashing LED | 28 (red, amber, and yellow)<br>36 (green, blue, and white) | 30 (red, amber, and yellow)<br>29 (green, blue, and white) | |
| | Strobe LED | 35 (red, amber, and yellow)<br>65 (green, blue, and white) | 10 | |
| Sound modules | Single-tone | 65 | 31 | 32 |

### Table 93 - Flashing Frequency (Light Only Modules)

| Device | Flashing Frequency |
|---|---|
| Flashing LED modules | Approximately 1.5 Hz; Time On/Time OFF = 1:1 |
| LED strobe modules | Approximately 2 Hz (flash duration 1/50,000 second) |

### Table 94 - Tone Frequency

| Attribute | Value |
|---|---|
| Tone frequency | Preset at 2500 Hz |

### Table 95 - Decibel Rating (Sound Modules) (1)

| Device | Decibel Rating |
|---|---|
| Single-tone sound module (SA3) | Maximum volume output is 80 dB(A) (non-adjustable) |

(1) All dB(A) ratings are determined at a distance of 1 m (3.3 ft) from the sound module.

### Table 96 - Leakage Current Impact

| |
|---|
| All light and sound modules can absorb up to 3 mA of leakage current from solid-state outputs without module activation. |

### Table 97 - Standards and Certifications

| Attribute | Bulletin 854K — 60 mm Control Tower Stack Lights |
|---|---|
| Standards compliance | • UL 508<br>• CSA C22.2 No. 14<br>• EN/IEC 60947-1<br>• EN/IEC 60947-5-1 |
| Certifications | • c-UL-us Listed (File No. E14840, Guides NKCR, NKCR7)<br>• CE Marked<br>• RoHS Compliant |

## Approximate Dimensions

Dimensions in millimeters (inches). Dimensions are not intended to be used for manufacturing purposes.

Light Module

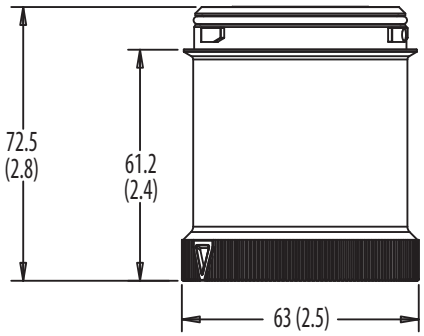


Sound Module

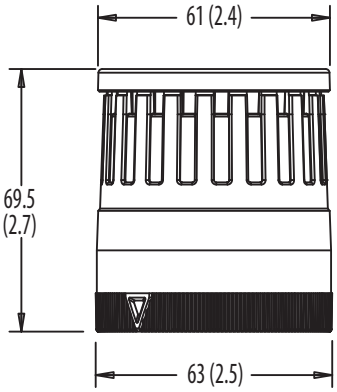


Cap

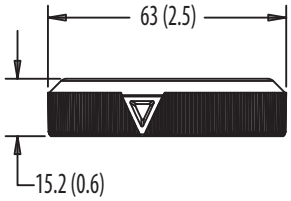


Vertical-mount Base

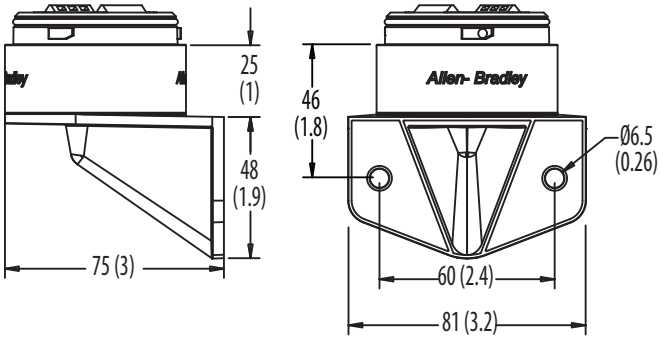


Surface-mount Base

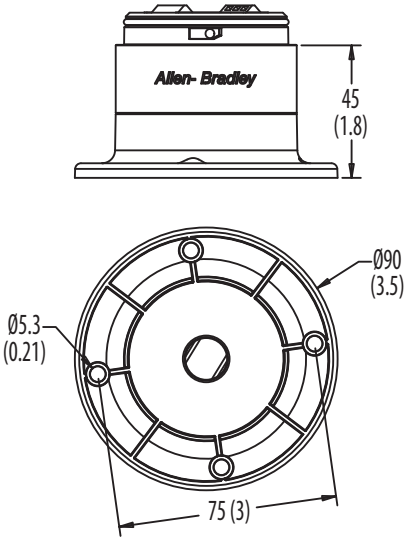


External Mounting Holes

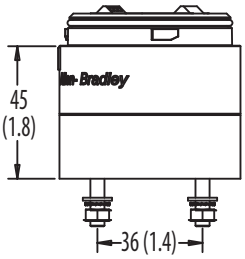


Pre-installed Hardware

Dimensions in millimeters (inches). Dimensions are not intended to be used for manufacturing purposes.

Quick-release Base

10 cm Base

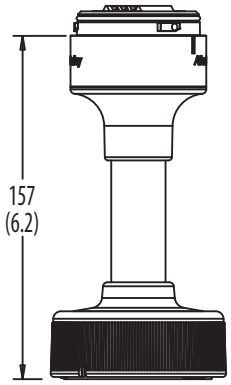


25 cm Base

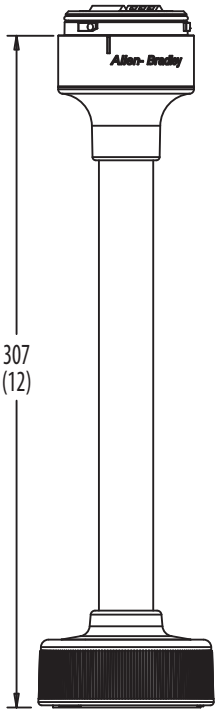


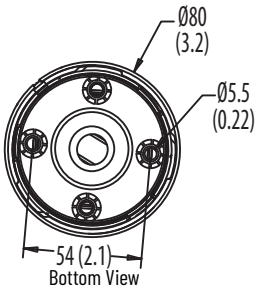


Pole-mount Bases

10 cm Base

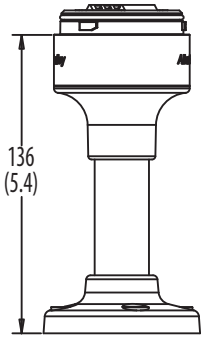


25 cm Base

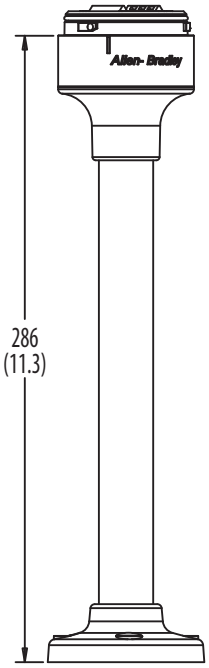


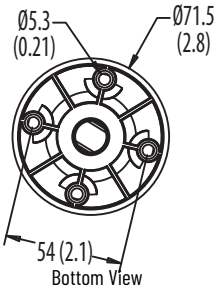


Double-sided Base

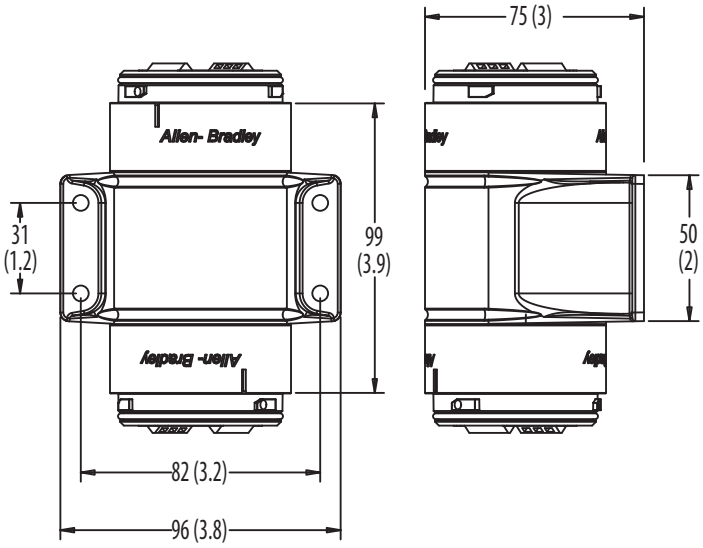


Flange-style Base with M12 Micro Connector (Male)

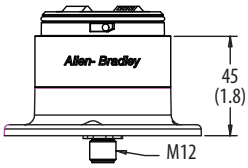


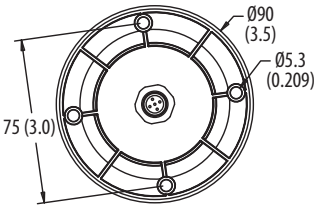


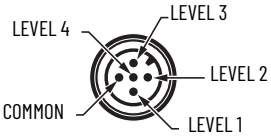


5-pin DC Micro Configuration

1/2 in. NPT Thread Base

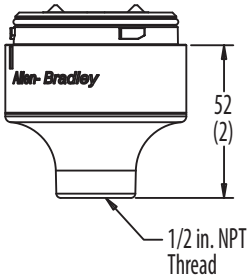

This product line includes 50 mm (855E) and 70 mm (855T) stack lights.

# Bulletin 855E — 50 mm Control Tower Stack Lights

These devices are designed to communicate application status, alerting you to critical equipment and system needs on the plant floor. They can be preassembled to save time or ordered as separate light and sound modules for customized field assembly.

## Light Modules

Flashing Incandescent

| 855E | - | 10 | FN | 4 |
|---|---|---|---|---|
| | | a | b | c |

| a | |
|---|---|
| Voltage | |
| Code | Description |
| 00 | 0...250V AC/DC (no lamp module) (1) |
| 12 | 12V AC/DC |
| 24 | 24V AC/DC |
| 10 | 120V AC |
| 20 | 240V AC |

| b | |
|---|---|
| Light Module Type | |
| Code | Description |
| XN | Steady no lamp (1) |
| DN | Steady incandescent |
| FN | Flashing incandescent |
| TL | Steady socket-mount LED |
| GL | Flashing socket-mount LED |
| BL | Strobe |

| c | |
|---|---|
| Lens Color | |
| Code | Description |
| 3 | Green |
| 4 | Red |
| 5 | Amber |
| 6 | Blue |
| 7 | Clear |
| 8 | Yellow |

(1) Can only be selected with module type XN, voltage code 00. Accepts socket mount incandescent lamp types only.

## Sound Modules

Sound modules have continuous and pulsing tones. Maximum sound output is 103 dB at 1 m (3.3 ft). A reduced volume setting is available by changing the position of the volume DIP switch, which produces a sound output of 88 dB(A) at 1 m (3.3 ft). Maximum sound output is 80 dB(A) at 1 m (3.3 ft).

Black Two-tone Sound Module

| 855E | - | B | 10 | TA3 |
|---|---|---|---|---|
| | | a | b | c |

| a | |
|---|---|
| Housing Color | |
| Code | Description |
| B | Black |
| G | Gray |

| b | |
|---|---|
| Voltage | |
| Code | Description |
| 12 | 12V AC/DC |
| 24 | 24V AC/DC |
| 10 | 120V AC |
| 20 | 240V AC |

| c | |
|---|---|
| Module Type | |
| Code | Description |
| SA3 | Single circuit/single tone piezo style steady/pulsing DIP switch selectable |
| TA3 | Two circuit/two-tone piezo style steady/pulsing DIP switch selectable |

# Standard Stack Light Bases

Surface-mount Base with Cap

Vertical-mount Base with Cap

Pole-mount Bases

Quick-release Base

| 855E | - | B | VM | C |
|---|---|---|---|---|
| | | a | b | c |

| a | |
|---|---|
| **Housing Color** | |
| **Code** | **Description** |
| B | Black |
| G | Gray |

| b | |
|---|---|
| **Base Type** | |
| **Code** | **Description** |
| CB | Surface mount with 1/2 in. NPT threading |
| RB | Surface mount with M20 metric threading |
| SB | Surface mount with PG16 threading |
| TM | 25 mm (0.98 in.) tube mount |
| VM | Vertical mount |
| PM10 | 10 cm (3.9 in.) aluminum pole-mount base |
| PM25 | 25 cm (9.8 in.) aluminum pole-mount base |
| PM40 | 40 cm (15.7 in.) aluminum pole-mount base |
| PM60 | 60 cm (23.6 in.) aluminum pole-mount base |
| PM80 | 80 cm (31.5 in.) aluminum pole-mount base |
| MM10 | 10 cm (3.9 in.) quick-release base |
| MM25 | 25 cm (9.8 in.) quick-release base |
| MM40 | 40 cm (15.7 in.) quick-release base |

| c | |
|---|---|
| **Cap Option (1)** | |
| **Code** | **Description** |
| Blank | No cap |
| C | Cap included |

(1) Quick-release bases always include a cap.

# Pre-configured Tower Lights, 1...5 Modules

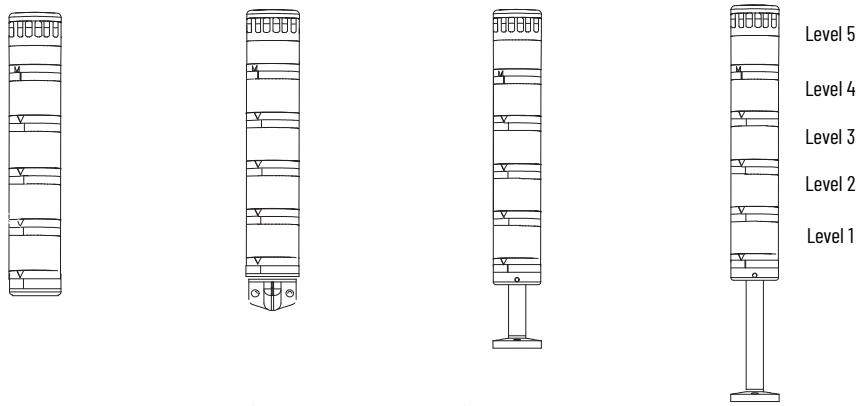


Surface Mount | Vertical Mount | 10 cm Pole Mount | 25 cm Pole Mount

| 855 | EC | - | B | 10 | Y | 3 | L | 5 | B | 3 | F | 7 | Y | 6 |
|---|---|---|---|---|---|---|---|---|---|---|---|---|---|---|
| | a | | b | c | d | e | d | e | d | e | d | e | d | e |
| | | | | | (Level 1, d+e) | | (Level 2, d+e) | | (Level 3, d+e) | | (Level 4, d+e) | | (Level 5, d+e) | |

| a | |
|---|---|
| **Base Type** | |
| **Code** | **Description** |
| EC | Surface mount - 1/2 in. NPT threading |
| ES | Surface mount - PG16 |
| EV | Vertical mount |
| EM | 25 mm tube mount |
| EP | 10 cm (3.9 in.) pole mount |
| EE | 25 cm (9.8 in.) pole mount |

| b | |
|---|---|
| **Base & Cap Color** | |
| **Code** | **Description** |
| B | Black |
| G | Gray |

| c | |
|---|---|
| **Voltage** | |
| **Code** | **Description** |
| 12 | 12V AC/DC |
| 24 | 24V AC/DC |
| 10 | 120V AC |
| 20 | 240V AC |

| d | |
|---|---|
| **Module Type** | |
| **Code** | **Description** |
| D | Steady incandescent |
| F | Flashing incandescent |
| Y | Steady LED |
| L | Flashing LED |
| B | Strobe |
| P | Single-circuit piezo sound module |
| Q | Two-circuit piezo sound module(1) |

| e | |
|---|---|
| **Lens Color/Sound** | |
| **Code** | **Description** |
| 1 | Sound module (2) |
| 3 | Green |
| 4 | Red |
| 5 | Amber |
| 6 | Blue |
| 7 | Clear |
| 8 | Yellow |

(1) If the two-circuit sound module (option Q in Table d) is selected, the maximum number of light modules that are allowed is three.
(2) Sound module option can only be selected with Module Type option P or Q in Table d. They must be in the top position of the stack.

# Accessories – Bulletin 855E/855T

| | Description | | Cat. No. |
|---|---|---|---|
| (BA15d Bayonet) 19 mm Socket Height | Incandescent Lamps | 12V AC/DC | 855T-L12 |
| | | 24V AC/DC | 855T-L24 |
| | | 120V AC | 855T-L10 |
| | | 240V AC | 855T-L20 |
| | LED Lamps for Socket-mounted Modules (For Industrial Use Only) | **Color** | **Cat. No.** |
| | 12V AC/DC | Red | 855E-LL12R |
| | | Green | 855E-LL12G |
| | | Amber | 855E-LL12A |
| | | Blue | 855E-LL12B |
| | | Yellow | 855E-LL12Y |
| | | White (1) | 855E-LL12W |
| | 24V AC/DC | Red | 855E-LL24R |
| | | Green | 855E-LL24G |
| | | Amber | 855E-LL24A |
| | | Blue | 855E-LL24B |
| | | Yellow | 855E-LL24Y |
| | | White (1) | 855E-LL24W |
| | 120V AC | Red | 855E-LL10R |
| | | Green | 855E-LL10G |
| | | Amber | 855E-LL10A |
| | | Blue | 855E-LL10B |
| | | Yellow | 855E-LL10Y |
| | | White (1) | 855E-LL10W |
| | 240V AC | Red | 855E-LL20R |
| | | Green | 855E-LL20G |
| | | Amber | 855E-LL20A |
| | | Blue | 855E-LL20B |
| | | Yellow | 855E-LL20Y |
| | | White (1) | 855E-LL20W |

(1) White LED lamps are to be used with a clear lens option.

| | Description | Color | Cat. No. |
|---|---|---|---|
| | Caps (top of stack)<br>The cap is installed to the top of the uppermost light module. No cap is needed if the top module is a sound module, or a light/with sound module. | Black | 855E-ABCAP (1) |
| | | Gray | 855E-AGCAP (1) |
| | | Black | 855T-ABCAP (2) |
| | | Gray | 855T-AGCAP (2) |
| | Module Securing Screws (Bag of 5) | | 855E-ASC (1) |

(1) For use with Bulletin 855E Control Tower™ stack lights only.
(2) For use with Bulletin 855T Control Tower stack lights only.

## Table 98 - Gaskets

| | Description | Cat. No. |
|---|---|---|
| | Lens O-ring Seal<br>Replacement rubber O-rings are to be installed between all bases, light, sound, and light/with sound modules. (Package quantity = 5) | 855E-ALSG (1) |
| | | 855T-ALSG (2) |
| | Surface Mount Gasket<br>Replacement flat gasket is to be placed between the mounting surface and the surface mount base. (Package quantity = 5) | 855E-ASFG (3) |
| | | 855T-ASFG (4) |
| | Pole Foot Gasket<br>Replacement flat gasket is to be placed between the mounting surface and the pole base bottom foot. (Must order multiples of 5.)<br>For use with Cat. No. 855T-BPM10C and 855T-BPM25C pole bases, Cat. No. 854J-BSFC and 854J-BSFQD5C bases, and Bul. 855T, 855E, 855F, 855D, 854J, and 854K quick release bases. | 855T-APFG |
| | Vertical Mount Gasket<br>Replacement flat gasket is to be placed between the mounting surface and the vertical mount base (Cat. No. 854J-BVMC). (Package quantity = 5) | 855T-AVFG |
| | Tube Mount Gasket<br>Replacement O-ring gasket is to be placed in the tube mount pole opening before the tube is installed (BTM- and GTM- type bases). (Package quantity = 5) | 855T-AVTG |
| | Mounting Screw Washer Kit<br>Replacement flat washers are used to provide a seal where the mounting screw meets the pole base. (1 kit includes 20 pieces) (Package quantity = 20) | 855T-AMSG |

(1) For use with Bulletin 855E Control Tower stack lights only.
(2) For use with Bulletin 855T Control Tower stack lights only.
(3) For use with Bulletin 855E Control Tower stack lights (SB, RB, & CB bases) only.
(4) For use with Bulletin 855T Control Tower stack lights (BSB and BCB bases) only.

## Table 99 - Pole Connection Boxes(1), Hole Plugs, and Cable Glands

| | Description | Cat. No. |
|---|---|---|
| | Black surface mount with PG16 threaded side entrance | 855T-BSMP |
| | Black surface mount with M20 threaded side entrance | 855T-BSMR |
| | Black vertical mount with PG16 threaded side entrance | 855T-BVMP |
| | Black vertical mount with M20 threaded side entrance | 855T-BVMR |
| | Black magnetic mount with PG16 threaded side entrance | 855T-BMMP |
| | Black magnetic mount with M20 threaded side entrance | 855T-BMMR |
| | Black magnetic mount with 1/2 in. NPT threaded side entrance | 855T-BMMN |
| | Black PG16 threaded hole plug | 855T-ABUP |
| | Black M20 threaded hole plug | 855T-ABUR |
| | Black PG16 threaded cable gland | 855T-ABCP |
| | Black M20 threaded cable gland | 855T-ABCR |
| | Black 1/2 in. NPT sealing connector | 855T-ABHN |
| | Mounting Screws<br>(M5 x 40 screws) for mounting Pole Mount Base to Pole Connection Box | 855T-AJBS |

(1) For use with Bulletin 855E and 855T pole mount bases, except for stainless steel and quick release base types.

## Table 100 - Mounting Kits

| | Description | Cat. No. |
|---|---|---|
| | Vertical Mount Kit<br>Kit includes vertical bracket and set of three sealing washers. For use with 855E surface mount base. | 855E-AVM |
| | Vertical Mount Kit<br>Kit includes vertical bracket and set of three sealing washers.<br>For use with 856T and 855E pole mount bases, 856T surface mount bases, and 856T M12 QD bases. | 855T-AVM |

# Specifications

## Table 101 - Mechanical

| Standard Bases | | Based on the weight and style of mounting; tower lights are subject to damage from shock and vibration. The following are reference guidelines for maximum acceptable conditions. | |
|---|---|---|---|
| | | Shock [G] | Vibration [G] |
| Surface-mount base or 10 cm aluminum pole base | 1 module stack | 150 | 5 |
| | 3 module stack | 45 | 1.5 |
| | 5 module stack | 35 | 0.75 |
| Vertical base or 25 cm aluminum pole base | 1 module stack | 95 | 3.5 |
| | 3 module stack | 30 | 1.25 |
| | 5 module stack | 20 | 0.5 |
| Recommended wire size | | 0.5...1.5 $mm^2$ (22...16 AWG) | |
| Recommended terminal torque | | 0.87 N•m (7 lb•in) | |

## Table 102 - Environmental

| Attribute | | Value |
|---|---|---|
| Ingress Ratings | Light modules with cap | UL Type 4/4X/13, IP66 |
| | Sound modules | UL Type 4/4X/13, IP66 |
| | Surface, vertical, tube mount bases | UL Type 4/4X/13, IP66 |
| | Pole-mount bases | UL Type 4/4X/13, IP66 |
| | Flange-style base with M12 micro connector(1) | UL Type 4/4X/13, IP66 |
| Temperature ranges | Operating | -25...+50 °C (-13...+122 °F) |
| | Storage | -40...+85 °C (-40...+185 °F) |

(1) UL Type 1 when used with Cat. No. 855T-AVM mounting bracket.

## Table 103 - Materials

| Part | Material |
|---|---|
| Bases, caps, lens covers, sound module housings, lenses | Polycarbonate |
| Lamp socket | Polycarbonate |
| Rubber seals and gaskets | Nitrile rubber |
| Pole (for aluminum pole assembly) | Aluminum |
| Pole base footing (for aluminum pole base) | Polycarbonate |
| Insulation sleeve (for pole insulation) | Polyolefin |
| Mounting screw washers | Polypropylene |

## Table 104 - Light Output

| Device | | Light Output | | | |
|---|---|---|---|---|---|
| | | 12V AC/DC | 24V AC/DC | 120V AC | 240V AC |
| Steady incandescent | | 0.5 MSCP<br>6.3 Lumens | 2.5 MSCP<br>31.4 Lumens | 3.0 MSCP<br>37.7 Lumens | 0.49 MSCP<br>6.2 Lumens |
| Flashing incandescent | | | | | |
| Strobe | | 1 J per lamp | | | |
| Steady, flashing socket mount LED | Red | 900...2240 mcd | | | |
| | Green | 900...1800 mcd | | | |
| | Amber | 1400...3550 mcd | | | |
| | Blue | 224...560 mcd | | | |
| | White and yellow | 900...1800 mcd | | | |

### Table 105 - Operating Voltage

| Device | Operating Voltage | | | |
|---|---|---|---|---|
| | 12V AC/DC | 24V AC/DC | 120V AC | 240V AC |
| Light modules and sound modules | 12V AC/DC (±10%) | 24V AC/DC (±10%) | 110V AC, 50 Hz (±10%)<br>120V AC, 60 Hz (±10%) | 230V AC, 50 Hz (±10%)<br>240V AC, 60 Hz (±10%) |

### Table 106 - Lamp Life Ratings (Design Life) Average Life Under Static, No Vibration, Conditions

| Device | Lamp Life Rating | | | |
|---|---|---|---|---|
| | 12V AC/DC | 24V AC/DC | 120V AC | 240V AC |
| Incandescent modules(1) (2) | 8000 hr | 7000 hr | 3000 hr | 1600 hr |
| LED modules | 100,000 hr | | | |
| Strobe modules | 15,000 hr | | | |
| Sound modules | 20,000 hr | | | |

(1) First failures at about 35% of average life. Severe vibration can reduce life to 44% of average life.
(2) Flashing applications can reduce life to 50% of average life.

### Table 107 - Current Consumption

| Device | | Current Consumption [mA] | | |
|---|---|---|---|---|
| | | 24V AC/DC | 120V AC | 240V AC |
| Light only modules | Steady LED | 22 (red, amber, and yellow)<br>33 (green, blue, and white) | 30 (red, amber, and yellow)<br>29 (green, blue, and white) | |
| | Flashing LED | 28 (red, amber, and yellow)<br>36 (green, blue, and white) | 30 (red, amber, and yellow)<br>29 (green, blue, and white) | |
| | Strobe LED | 35 (red, amber, and yellow)<br>65 (green, blue, and white) | 10 | |
| Sound modules | Single-tone | 65 | 31 | 32 |

### Table 108 - Flashing and Tone Frequency

| Attribute | Value |
|---|---|
| **Flashing Frequency (Light Only Modules)** | |
| Flashing incandescent modules | 12V module approximately 1.5 Hz<br>24V, 120V, and 240V modules approximately 2 Hz<br>Time ON/Time OFF = 1:1 |
| Flashing LED modules | Approximately 1.5 Hz; Time On/Time OFF = 1:1 |
| LED strobe modules | Approximately 2 Hz (flash duration 1/50,000 second) |
| **Flashing and Tone Frequency (Light Modules/with Sound Set at Continuous Tone)** | |
| Tone frequency | Tone frequency is preset at 2800 Hz |
| **Flashing and Tone Pulsing Frequencies (Light Modules/with Sound Set at Pulsing Tone)** | |
| Tone frequency | Tone frequency is preset at 2800 Hz |

### Table 109 - Decibel Rating (Sound Modules) (1)

| Device | Decibel Rating |
|---|---|
| Single-tone sound module (SA3) | Maximum volume ranges from 88 dB(A) or 103 dB(A) (volume adjustable by DIP switch) |
| Two-tone sound module (TA3) | |

(1) All dB(A) ratings are determined at a distance of 1 m (3.3 ft) from the sound module.

### Table 110 - Leakage Current Impact

| |
|---|
| All light and sound modules can absorb up to 3 mA of leakage current from solid-state outputs without module activation. |

### Table 111 - Standards and Certifications

| Attribute | Bulletin 855E — 50 mm Control Tower Stack Lights |
|---|---|
| Standards Compliance | • UL 508<br>• CSA C22.2 No. 14<br>• EN/IEC 60947-1<br>• EN/IEC 60947-5-1 |
| Certifications | • c-UL-us Listed (File No. E14840, Guides NKCR, NKCR7)<br>• CE Marked |

# Approximate Dimensions

Dimensions in millimeters (inches). Dimensions are not intended to be used for manufacturing purposes.

Light Modules

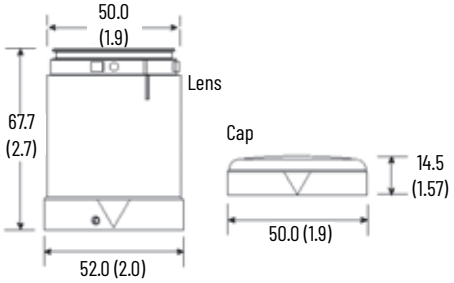


Vertical-mount Base

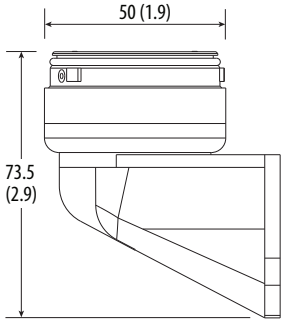


Sound Module

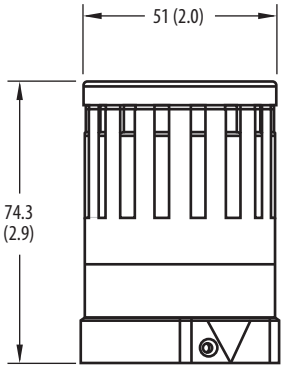


Surface-mount Base

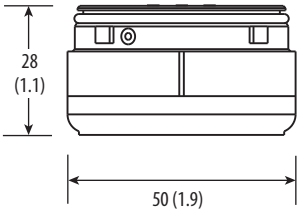


Quick Release Base

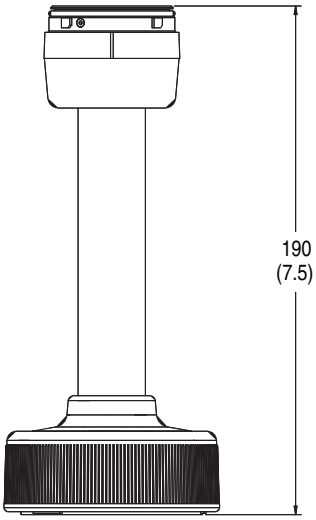


Pole-mount Bases

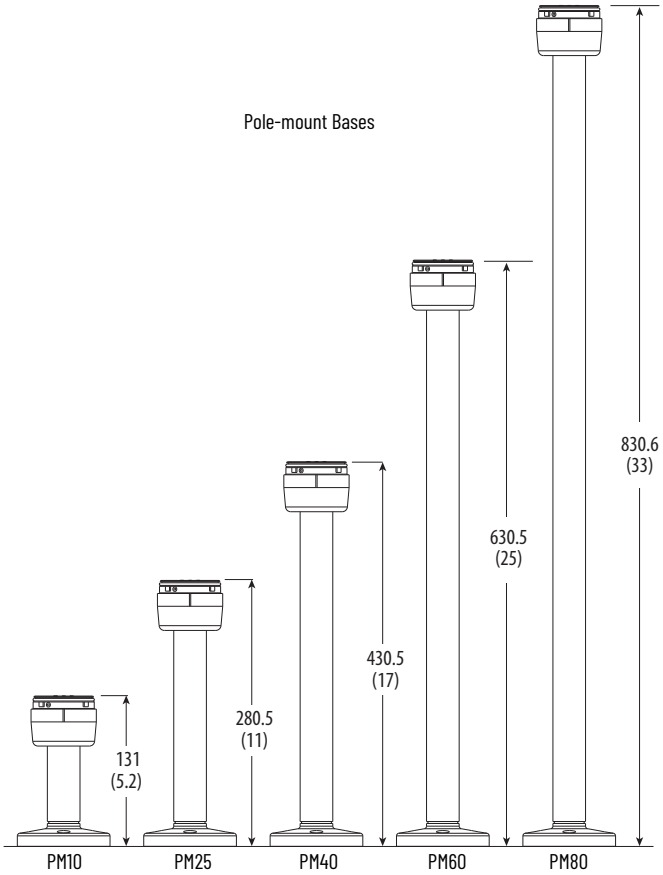

# Bulletin 855T — 70 mm Control Tower Stack Lights

These devices are designed to communicate application status, alerting you to critical equipment and system needs on the plant floor. They can be preassembled to save time or ordered as separate light and sound modules for customized field assembly.

## Light Modules

Red Flashing Incandescent (Black Housing)

| 855T | - | B | 10 | FN | 4 |
|---|---|---|---|---|---|
| | | a | b | c | d |

| a | |
|---|---|
| **Housing Color** | |
| **Code** | **Description** |
| B | Black |
| G | Gray |

| b | |
|---|---|
| **Voltage** | |
| **Code** | **Description** |
| 00 | 0...250V AC/DC (use only with module code XN) |
| 12 | 12V AC/DC |
| 24 | 24V AC/DC |
| 10 | 120V AC |
| 20 | 240V AC |

| c | |
|---|---|
| **Light Module Type** | |
| **Code** | **Description** |
| XN | Steady no lamp(1) |
| DN | Steady incandescent |
| FN | Flashing incandescent |
| TL | Steady LED |
| GL | Flashing LED |
| RL | Rotating LED, simulated with fixed LEDs(2) |
| BR | Strobe |

| d | |
|---|---|
| **Lens Color** | |
| **Code** | **Description** |
| 3 | Green |
| 4 | Red |
| 5 | Amber |
| 6 | Blue |
| 7 | Clear |
| 8 | Yellow |

(1) Use only with Voltage Code 00. Accepts LED module or incandescent lamp.
(2) Only available with Voltage Codes 10 or 24, and Color Codes 3, 4, or 5.

## Combined Light Modules with Piezo Sounder

All single-circuit modules contain a selected light option with a sound device that operates simultaneously. All two-circuit modules contain two circuits that allow for separate operation of light or sound. The piezo-style sound modules can be switched to pulsing or continuous sound with a DIP switch. Additionally, the volume can be adjusted to either low (92 dB(A)) or high (107 dB(A)), via a DIP switch. UL Type 4/4X/13, IP65.

Combination Module

| 855T | - | B | 10 | DC | 3 |
|---|---|---|---|---|---|
| | | a | b | c | d |

| a | |
|---|---|
| **Housing Color** | |
| **Code** | **Description** |
| B | Black |
| G | Gray |

| b | |
|---|---|
| **Voltage** | |
| **Code** | **Description** |
| 12 | 12V AC/DC |
| 24 | 24V AC/DC |
| 10 | 120V AC |
| 20 | 240V AC |

| c | |
|---|---|
| **Combined Module Type** (1) (2) | |
| **Code** | **Description** |
| DC | Steady incandescent with sound |
| DD | Two-circuit steady incandescent with sound |
| FC | Flashing incandescent with sound |
| TC | Steady LED with sound |
| GC | Flashing LED with sound |
| BC | Strobe with sound |

| d | |
|---|---|
| **Lens Color** | |
| **Code** | **Description** |
| 3 | Green |
| 4 | Red |
| 5 | Amber |
| 6 | Blue |
| 7 | Clear |
| 8 | Yellow |

(1) The single-circuit combined light/with sound module uses one circuit in a stack. It can be used with a maximum of four light modules and must be placed in the top position of a stack.
(2) The two-circuit combined light/with sound module uses two circuits in a stack. It can be used with a maximum of three light modules and must be placed in the top position of a stack.

## Transducer-style Sound Modules

- UL Type 12, IP54
- Up to 15 tones
- Adjustable volume from 85...103 dB at 1 m (3.3 ft)
- Adjustable frequency and speed tone

Sound Module

| 855T | - | B | 10 | SA1 |
|---|---|---|---|---|
| | | a | b | c |

| a | |
|---|---|
| **Housing Color** | |
| **Code** | **Description** |
| B | Black |
| G | Gray |

| b | |
|---|---|
| **Voltage** | |
| **Code** | **Description** |
| 12 | 12V AC/DC |
| 24 | 24V AC/DC |
| 10 | 120V AC |
| 20 | 240V AC |

| c | |
|---|---|
| **Module Type** | |
| **Code** | **Description** |
| SA1 | Single-tone sound module with 13 different tones (1) |
| TA1 | Dual-tone sound module with 15 sets of dual-tone combinations (2) |

(1) This module uses one circuit in a stack. It can be used with maximum of any four light modules and must be placed on top of stack.
(2) This module uses two circuits in a stack. It can be used with a maximum of any three light modules and must be placed on top of stack.

## Piezo-style Sound Modules

- Single- or dual-circuit versions
- High/low volume selectable via DIP switch

| 855T | - | G | 24 | TA2 |
|---|---|---|---|---|
| | | a | b | c |

| a | |
|---|---|
| **Housing Color** | |
| **Code** | **Description** |
| B | Black |
| G | Gray |

| b | |
|---|---|
| **Voltage** | |
| **Code** | **Description** |
| 12 | 12V AC/DC |
| 24 | 24V AC/DC |
| 10 | 120V AC |
| 20 | 240V AC |

| c | |
|---|---|
| **Module Type** | |
| **Code** | **Description** |
| SA2 | • Single-tone/single-circuit piezo-style module with continuous or pulsing tones (modified by a DIP switch)<br>• Type 12<br>• Volume 97 dB or 85 dB @ 1 m (3.3 ft) |
| TA2 | • Dual-tone/dual-circuit piezo-style module with continuous or pulsing tone (modified by energizing one or two circuits of sound modules)<br>• Type 12<br>• Volume 97 dB or 85 dB @ 1 m (3.3 ft) |
| SA3 | • Single-circuit piezo-style module with continuous or pulsing tones (modified by a DIP switch)<br>• Type 4/4X/13<br>• Volume 107 dB or 92 dB @ 1 m (3.3 ft) |
| TA3 | • Dual-circuit piezo-style module with continuous or pulsing tone (modified by energizing one or two circuits of sound modules)<br>• Type 4/4X/13<br>• Volume 107 dB or 92 dB @ 1 m (3.3 ft) |

# Standard and DeviceNet Stack Light Bases

Surface-mount Base with Cap

Vertical-mount Base with Cap

10 cm Pole-mount Base

25 cm Quick-release Base

40 cm Powder-coated Stainless Steel Pole-mount Base

80 cm Powder-coated Stainless Steel Pole-mount Base with Cap

Surface-mount, Conduit-mount Base with Stranded Wire Cable

10 cm Pole-mount Base with Micro-connect Cable and Cap

Vertical-mount Base with Micro-connect Cable and Cap

| 855T | - | DL1 | B | PM10 | C |
|---|---|---|---|---|---|
| | | a | b | c | c |

| a | |
|---|---|
| **Network Connection Type** | |
| **Code** | **Description** |
| Blank | No network connection |
| DM1 | DeviceNet® micro-connect with 1 m (3.3 ft) cable (1) |
| DS2 | DeviceNet stranded wire connect with 2 m (6.6 ft) cable (1) |
| DL1 | DeviceNet mini-connect with 1 m (3.3 ft) cable (1) |

| b | |
|---|---|
| **Housing Color** | |
| **Code** | **Description** |
| B | Black |
| G | Gray |

| c | |
|---|---|
| **Base Type** | |
| **Code** | **Description** |
| CB | Surface mount—1/2 in. NPT conduit mount |
| SB | Surface mount — PG16 conduit mount |
| RB | Surface mount — M20 x 1.5 conduit mount |
| VM | Vertical mount |
| TM | 25 mm diameter tube mount |
| PM10 | 10 cm (3.9 in.) aluminum pole mount base |
| PM25 | 25 cm (9.8 in.) aluminum pole mount base |
| PM40 | 40 cm (15.7 in.) aluminum pole mount base |
| SPM10 | 10 cm (3.9 in.) stainless steel pole mount (2) |
| SPM25 | 25 cm (9.8 in.) stainless steel pole mount (2) |
| SPM40 | 40 cm (15.7 in.) stainless steel pole mount (2) |
| SPM60 | 60 cm (23.6 in.) stainless steel pole mount (2) |
| SPM80 | 80 cm (31.5 in.) stainless steel pole mount (2) |
| MM10 | 10 cm (3.9 in.) quick release base |
| MM25 | 25 cm (9.8 in.) quick release base |
| MM40 | 40 cm (15.7 in.) quick release base |

| d | |
|---|---|
| **Cap Option** | |
| **Code** | **Description** |
| Blank | No cap |
| C | Cap included |

(1) DeviceNet bases DL1, DM1, or DS2 can only be used with 24V AC/DC and they are only available with Base Types CB, SB, VM, TM, PM10, or PM25.
(2) Stainless steel tube is powder-coated in black.

# Pre-configured Control Tower Lights, 1...5 Modules

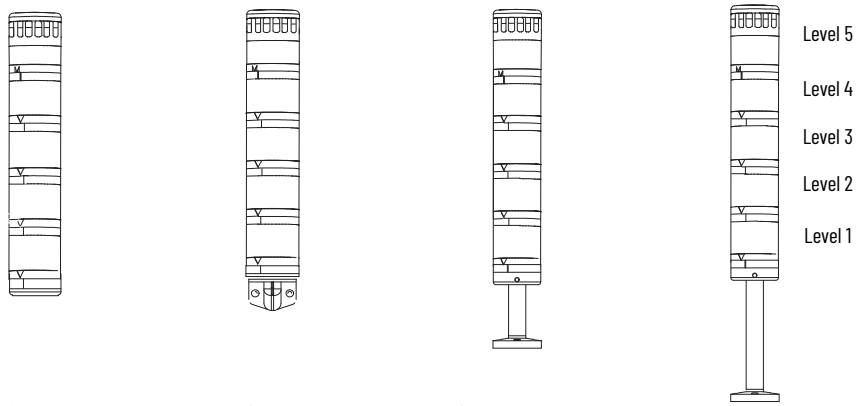


Surface Mount | Vertical Mount | 10 cm Pole Mount | 25 cm Pole Mount

| 855 | TS | - | DL1 | B | 24 | Y | 4 | L | 5 | B | 3 | F | 7 | Y | 6 |
|---|---|---|---|---|---|---|---|---|---|---|---|---|---|---|---|
| | a | | b | c | d | e | f | e | f | e | f | e | f | e | f |
| | | | | | | (Level 1, e+f) | | (Level 2, e+f) | | (Level 3, e+f) | | (Level 4, e+f) | | (Level 5, e+f) | |

| a | |
|---|---|
| **Base Type** | |
| **Code** | **Description** |
| TC | Surface mount 1/2 in. NPT conduit |
| TS | Surface mount PG16 conduit |
| TV | Vertical mount |
| TP | 10 cm (3.9 in.) pole mount |
| TE | 25 cm (9.8 in.) pole mount |
| TM | 25 mm diameter tube mount |

| b | |
|---|---|
| **Network Options** (1) | |
| **Code** | **Description** |
| Blank | Standard |
| DL1 | DeviceNet mini-connect with 1 m (3.3 ft) cable |
| DM1 | DeviceNet micro-connect with 1 m (3.3 ft) cable |
| DS2 | DeviceNet stranded wire connect with 2 m (6.6 ft) cable |

| c | |
|---|---|
| **Housing Color** | |
| **Code** | **Description** |
| B | Black |
| G | Gray |

(1) DeviceNet bases DL1, DM1, or DS2 can only be used with 24V AC/DC.

| d | |
|---|---|
| **Voltage** | |
| **Code** | **Description** |
| 12 | 12V AC/DC |
| 24 | 24V AC/DC |
| 10 | 120V AC |
| 20 | 240V AC |

| e | |
|---|---|
| **Module Type** | |
| **Code** | **Description** |
| D | Steady incandescent |
| F | Flashing incandescent |
| Y | Steady LED |
| L | Flashing LED |
| B | Strobe |
| T | Steady incandescent with sound (1) |
| H | Flashing incandescent with sound (1) |
| J | Dual-circuit steady incandescent with sound |
| E | Steady LED with sound (1) |
| G | Flashing LED with sound (1) |
| Z | Strobe with sound (1) |
| A | Transducer single-circuit sounder UL Type 12, IP54(1) |
| W | Transducer dual-circuit sounder UL Type 12, IP54 (1) |
| P | Single-circuit piezo alarm |
| Q | Dual-circuit piezo alarm |

| f | |
|---|---|
| **Lens Color/Sound** | |
| **Code** | **Description** |
| 1 | Sound module (2) |
| 3 | Green |
| 4 | Red |
| 5 | Amber |
| 6 | Blue |
| 7 | Clear |
| 8 | Yellow |

(1) Only one sound module or light module/with sound can be assembled per stack. These modules must be placed in the top position.
(2) Sound module from Table f can only be selected with single-tone or two-tone module types from Table e.

## Accessories

See Accessories – Bulletin 855E/855T on page 70.

## Specifications

### Table 112 - Mechanical

| Attribute | | | Based on the weight and style of mounting; tower lights are subject to damage from shock and vibration. The following are reference guidelines for maximum acceptable conditions. | |
|---|---|---|---|---|
| | | | Shock [G] | Vibration [G] |
| Standard bases | Surface-mount base or 10 cm (3.9 in.) aluminum pole base | 1 module stack | 150 | 5 |
| | | 3 module stack | 45 | 1.5 |
| | | 5 module stack | 35 | 0.75 |
| | Vertical base or 25 cm (9.8 in.) aluminum pole base | 1 module stack | 95 | 3.5 |
| | | 3 module stack | 30 | 1.25 |
| | | 5 module stack | 20 | 0.5 |
| DeviceNet bases | Surface-mount base or 10 cm (3.9 in.) aluminum pole base | 1 module stack | 50 | 5 |
| | | 3 module stack | 45 | 1.5 |
| | | 5 module stack | 35 | 0.75 |
| | Vertical base or 25 cm (9.8 in.) aluminum pole base | 1 module stack | 50 | 3.5 |
| | | 3 module stack | 30 | 1.25 |
| | | 5 module stack | 20 | 0.5 |
| Recommended wire size | | | 0.5...2.5 $mm^2$ (22...14 AWG) | |
| Recommended terminal torque | | | 0.8 N•m (7 lb•in) | |

### Table 113 - Environmental

| Attribute | | Value |
|---|---|---|
| Ingress ratings | Light modules with cap and combined light/sound modules | UL Type 4/4X/13, IP65 |
| | Sound modules (SA1, SA2, TA1, TA2) | UL Type 12, IP54 |
| | Sound modules (SA3, TA3) | UL Type 4/4X/13, IP65 |
| | Surface, vertical, tube mount, and On-Machine™ bases | UL Type 4/4X/13, IP65 |
| | Pole-mount bases (aluminum) | UL Type 4/13, IP65 |
| | Pole-mount bases (stainless steel) | UL Type 4/4X/13, IP65 |
| Temperature ranges | Operating | -25...+70 °C (-13...+158 °F) |
| | Storage | -40...+85 °C (-40...+185 °F) |

### Table 114 - Materials

| Part | Material |
|---|---|
| Bases, caps, lens covers, sound module housings, lenses, lamp sockets | Polycarbonate |
| Rubber seals and gaskets | Nitrile rubber |
| Pole (for aluminum pole assembly) | Aluminum |
| Pole base footing (for aluminum pole base) | Polycarbonate |
| Pole (for stainless steel assembly) | Powder-coated stainless steel |
| Pole base footing (for stainless steel pole base) | Zinc |
| Insulation sleeve (for pole insulation) | Polyolefin |
| Surface and vertical-mount pole connection box and magnetic mount housing | Polycarbonate |
| Mounting screw washers | Polypropylene |
| DeviceNet base grommet | Neoprene® |
| DeviceNet cable jackets | CPR Chlorinated Polyethylene |
| DeviceNet cable connectors | Santoprene® |

## Table 115 - Light Output

| Device | | Light Output | | | |
|---|---|---|---|---|---|
| | | 12V AC/DC | 24V AC/DC | 120V ACC | 240V AC |
| Steady incandescent | | 0.5 MSCP<br>6.3 Lumens | 2.5 MSCP<br>31.4 Lumens | 3.0 MSCP<br>37.7 Lumens | 0.49 MSCP<br>6.2 Lumens |
| Flashing incandescent | | | | | |
| Strobe | | 3 J per lamp | | | |
| Steady/flashing socket mount LED | Red | 900...2240 mcd | | | |
| | Green | 900...1800 mcd | | | |
| | Amber | 1400...3550 mcd | | | |
| | Blue | 224...560 mcd | | | |
| | White and yellow | 900...1800 mcd | | | |

## Table 116 - Operating Voltage

| Device | Operating Voltage | | | |
|---|---|---|---|---|
| | 12V AC/DC | 24V AC/DC | 120V AC | 240V AC |
| Light modules and sound modules | 12V AC/DC (±10%) | 24V AC/DC (±10%) | 110V AC, 50 Hz (±10%)<br>120V AC, 60 Hz (±10%) | 230V AC, 50 Hz (±10%)<br>240V AC, 60 Hz (±10%) |

## Table 117 - Lamp Life Ratings (Design Life) Average Life Under Static, No Vibration, Conditions

| Device | Lamp Life Rating | | | |
|---|---|---|---|---|
| | 12V AC/DC | 24V AC/DC | 120V AC | 240V AC |
| Incandescent modules(1) (2) | 8000 hr | 7000 hr | 3000 hr | 1600 hr |
| LED modules | 100,000 hr | | | |
| Strobe modules | 15,000 hr | | | |
| Sound modules | 20,000 hr | | | |

(1) First failures at about 35% of average life. Severe vibration can reduce life to 44% of average life.
(2) Flashing applications can reduce life to 50% of average life.

## Table 118 - Current Consumption

| Device | | Current Consumption [mA] | | | |
|---|---|---|---|---|---|
| | | 12V AC/DC | 24V AC/DC | 120V AC | 240V AC |
| Light only modules | Steady incandescent | 208 | 271 | 58 | 23 |
| | Steady or flashing LED | 42 | 29 | 21 | 20 |
| | Strobe | 240 | 170 | 50 | 35 |
| Light modules with sound | Steady incandescent/with sound | 218 | 281 | 78 | 43 |
| | Flashing incandescent/with sound | 218 | 281 | 78 | 43 |
| | Steady or flashing LED/with sound (red, amber, yellow) | 100 | 62 | 22.5 | 20 |
| | Steady or flashing LED/with sound (green, blue, white) | 250 | 180 | 70 | 55 |
| | Strobe/with sound | 250 | 180 | 70 | 55 |
| Transducer style sound modules | Single- and two-circuit modules | 30 | 65 | 110V/50 Hz<br>120V/60 Hz<br>60 mA | 230V/50 Hz<br>240V/60 Hz<br>60 mA |
| Piezo style sound modules | Single- and two-circuit modules | 27 | 45 | 43 | 40 |
| DeviceNet bases | | – | 70 | – | – |

## Table 119 - Flashing and Tone Frequency

| Attribute | Value |
|---|---|
| **Flashing Frequency (Light Only Modules)** | |
| Flashing incandescent modules | 12V module approximately 1.5 Hz<br>24V, 120V, and 240V modules approximately 2 Hz<br>Time ON/Time OFF = 1:1 |
| Flashing LED modules | Approximately 1.5 Hz; Time On/Time OFF = 1:1 |
| Strobe modules | Approximately 2 Hz (flash duration 1/50,000 second) |
| **Flashing and Tone Frequency (Light Modules/with Sound Set at Continuous Tone)** | |
| Tone frequency | Preset at 2400 Hz or 3300 Hz |
| Flashing incandescent/ with sound | 12V module approximately 1.5 Hz<br>24V, 120V, and 240V modules approximately 1.6 Hz |
| Flashing LED/ with sound | Flashing frequency approximately 1.5 Hz |
| Strobe/with sound | Flashing frequency approximately 1.4 Hz |
| **Flashing and Tone Pulsing Frequencies (Light Modules/with Sound Set at Pulsing Tone)** | |
| Tone frequency | Preset at 2400 Hz or 3300 Hz |
| Steady incandescent/ with sound | Sound Pulsing Frequency — 1.5 Hz |
| Flashing incandescent/ with sound | Flashing and Pulsing Frequency the same for 12V module approximately 1.5 Hz, for 24V, 120V, and 240V modules approximately 1.6 Hz |
| Steady LED/ with sound | Sound Pulsing Frequency — 1.5 Hz |
| Flashing LED/ with sound | Flashing and Pulsing Frequency the same at 1.5 Hz |
| Strobe/with sound | Flashing and Pulsing Frequency the same at 1.4 Hz |

## Table 120 - Decibel Rating (Sound Modules)

| Device | Decibel Rating (1) |
|---|---|
| Selectable tone sound module (SA1, TA1) | Maximum volume ranges from 64...103 dB(A) (volume adjustable)<br>Based on tone that is selected for all settings except signal horn, which has a maximum of 80 dB(A) |
| Piezo sound module (SA2, TA2) | High 97 dB/Low 85 dB, selectable via DIP switch |
| Piezo sound module (SA3, TA3) | High 107 dB/Low 95 dB, selectable via DIP switch |
| Piezo light modules and light modules/with sound (set at continuous or pulsing tone) | High 107 dB/Low 95 dB, selectable via DIP switch |

(1) All dB(A) ratings are determined at a distance of 1 m (3.3 ft) from sound module.

## Table 121 - Leakage Current Impact

| | |
|---|---|
| All light modules, sound modules, and light/sound modules can absorb up to 3 mA of leakage current from solid-state outputs without module activation. Some light and light modules with sound may not turn off completely when connected to solid-state outputs that emit leakage current. The following modules can be affected by an output module emitting a maximum of 3 mA. A dry contact can be used to reduce the effect of leakage current. | |
| 12V AC/DC, 24V AC/DC, 120V AC, 240V AC | All light/sound combination modules |

## Table 122 - DeviceNet Bases

| Attribute | Value |
|---|---|
| Communication rate options | 125K, 250K, 500K, Autobaud |

## Table 123 - Standards and Certifications

| Attribute | Bulletin 855T — 70 mm Control Tower Stack Lights |
|---|---|
| Standards compliance | • UL 508<br>• CSA C22.2 No. 14<br>• EN/IEC 60947-1<br>• EN/IEC 60947-5-1 |
| Certifications | • c-UL-us Listed (File No. E14840, Guides NKCR, NKCR7)<br>• CE Marked |

## Transducer Style Single-circuit Sound Module (SA1)

| | DIP Switch Position | Tone Description | | Speed [Hz] | Upper Frequency [Hz] | Lower Frequency [Hz] | Volume [dB(A)] |
|---|---|---|---|---|---|---|---|
| 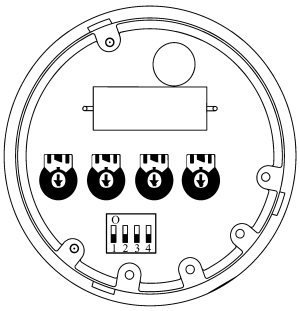 Adjustable Sound Settings | | Triangle Tone | | 7...22 | 1500 | 500 | 80...100 |
| | | Continuous Tone |  | – | (1) | 500 | 83...100 |
| | 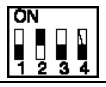 | Interrupted Tone |  | 0.5...1.5 | (1) | 500...1500 | 83...103 |
| | 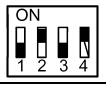 | Changing Tone | | 0.5...1.5 | 500...1500 | 500...1500 | 83...103 |
| | 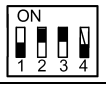 | Saw Tooth Tone Ascending | | 0.5...1.5 | 500...1500 | 500...1500 | 83...103 |
| | | Saw Tooth Tone Descending | | 0.5...1.5 | 500...1500 | 500...1500 | 83...103 |
| Volume Lower Freq. Upper Freq. Speed Rotated View of Sound Settings | 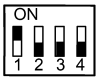 | Sine-wave Tone | | 0.5...1.5 | 500...1500 | 500...1500 | 82...102 |
| | 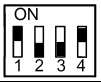 | DIN-Emergency Signal | DIN 33404 | 1 | 1200 | 500 | 82...102 |
| | 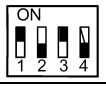 | Siren (Non-repeating) | | 2...4 s | 1500 | 500 | 83...103 |
| | 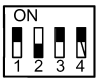 | Signal Horn Continuous Tone | | – | (1) | 100...350 | 64...80 |
| | 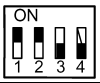 | Three-tone Gong | | 2...4 s | 660<br>550<br>440 | | 76...95 |
| | 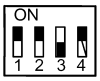 | Two-tone Gong | | 2...4 s | 550<br>440 | | 75...93 |
| | 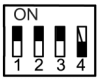 | Gong | | 1...3 s | (1) | 500...1500 | 75...93 |

(1) Set to maximum (+).

## Transducer Style Dual-circuit Sound Module (TA1)

| | DIP Switch Position | Tone A | | Tone B | |
|---|---|---|---|---|---|
| 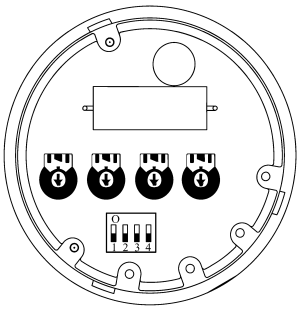 Adjustable Sound Settings | ON 1 2 3 4 | Triangle Tone | | Continuous Tone | |
| | ON 1 2 3 4 | Continuous Tone | | Changing Tone | |
| | ON 1 2 3 4 | Continuous Tone | | Interrupted Tone | |
| | ON 1 2 3 4 | Interrupted Tone | | Three-tone Gong | |
| | ON 1 2 3 4 | Interrupted Tone | | Siren (Non-repeating) | |
| | ON 1 2 3 4 | Changing Tone | | DIN-Emergency Signal | DIN 33404 |
| | ON 1 2 3 4 | Saw Tooth Tone Ascending | | Continuous Tone | |
| Volume, Lower Freq., Upper Freq., Speed<br>Rotated View of Sound Settings | ON 1 2 3 4 | Saw Tooth Tone Descending | | Interrupted Tone | |
| | ON 1 2 3 4 | Sine-wave Tone | | DIN-Emergency Signal | DIN 33404 |
| | ON 1 2 3 4 | DIN-Emergency Signal | DIN 33404 | Three-tone Gong | |
| | ON 1 2 3 4 | Siren (Non-repeating) | | Triangle Tone | |
| | ON 1 2 3 4 | Signal Horn Continuous Tone | | Continuous Tone | |
| | ON 1 2 3 4 | Three-tone Gong | | Sine-wave Tone | |
| | ON 1 2 3 4 | Two-tone Gong | | Two-tone Gong (Non-repeating) | |
| | ON 1 2 3 4 | Gong | | Continuous Tone | |

## Approximate Dimensions

Dimensions in millimeters (inches). Dimensions are not intended to be used for manufacturing purposes.

**Figure 9 - Assembled Control Tower Lights — Light Modules Only or Light Modules with Sound Module on Top Position [(a)]**

Surface-mount Base (SB and CB)

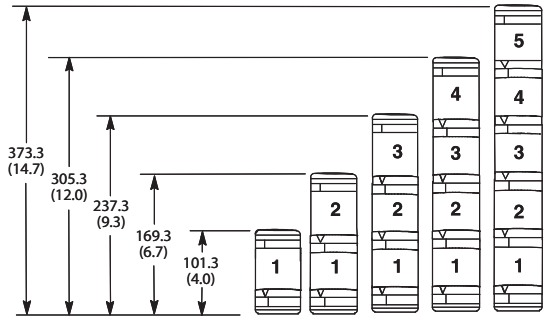


Tube-mount Base (TM)

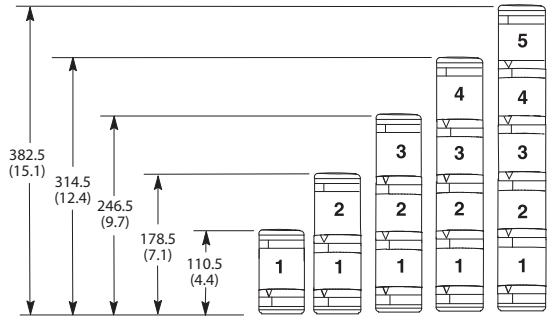


Vertical-mount Base (VM)

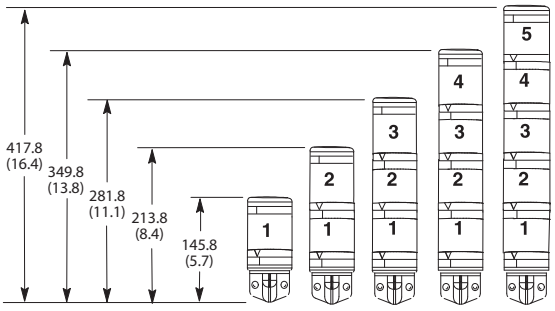


10 cm Pole-mount Base (PM10, SPM25)

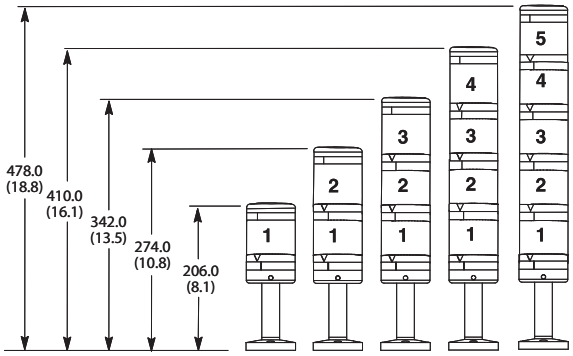


25 cm Pole-mount Base (PM25, SPM25)

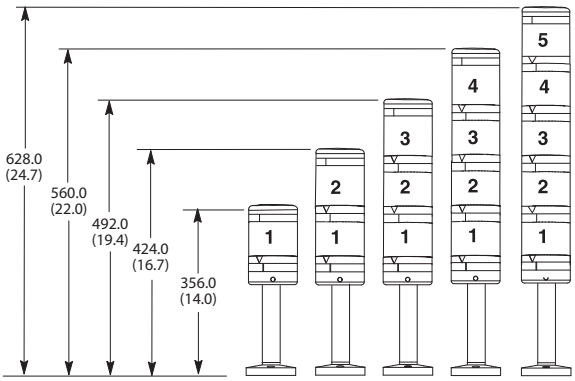


40 cm Pole-mount Base (PM40, SPM40)

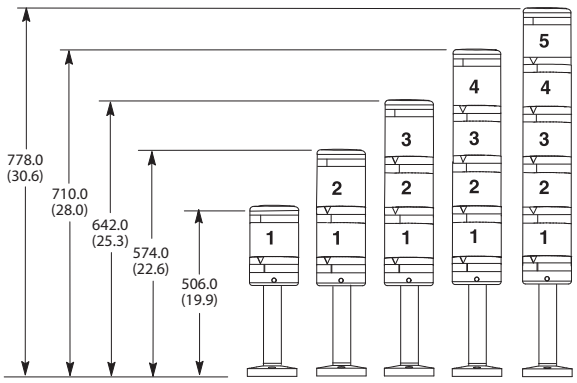


60 cm Pole-mount Base (SPM60)

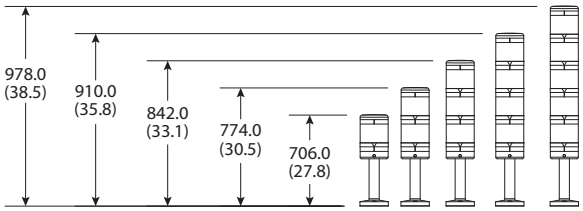


80 cm Pole-mount Base (SPM80)

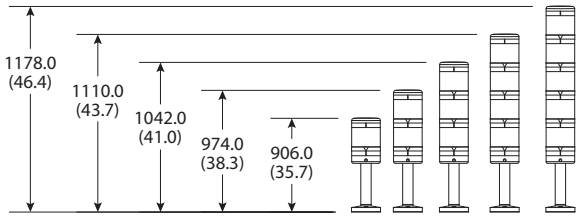


(a) If a combined light/sound module is used, add 21.5 mm (0.8 in.) to vertical dimensions.

Dimensions in millimeters (inches). Dimensions are not intended to be used for manufacturing purposes.

**Figure 10 - Component and Accessory Dimensions**

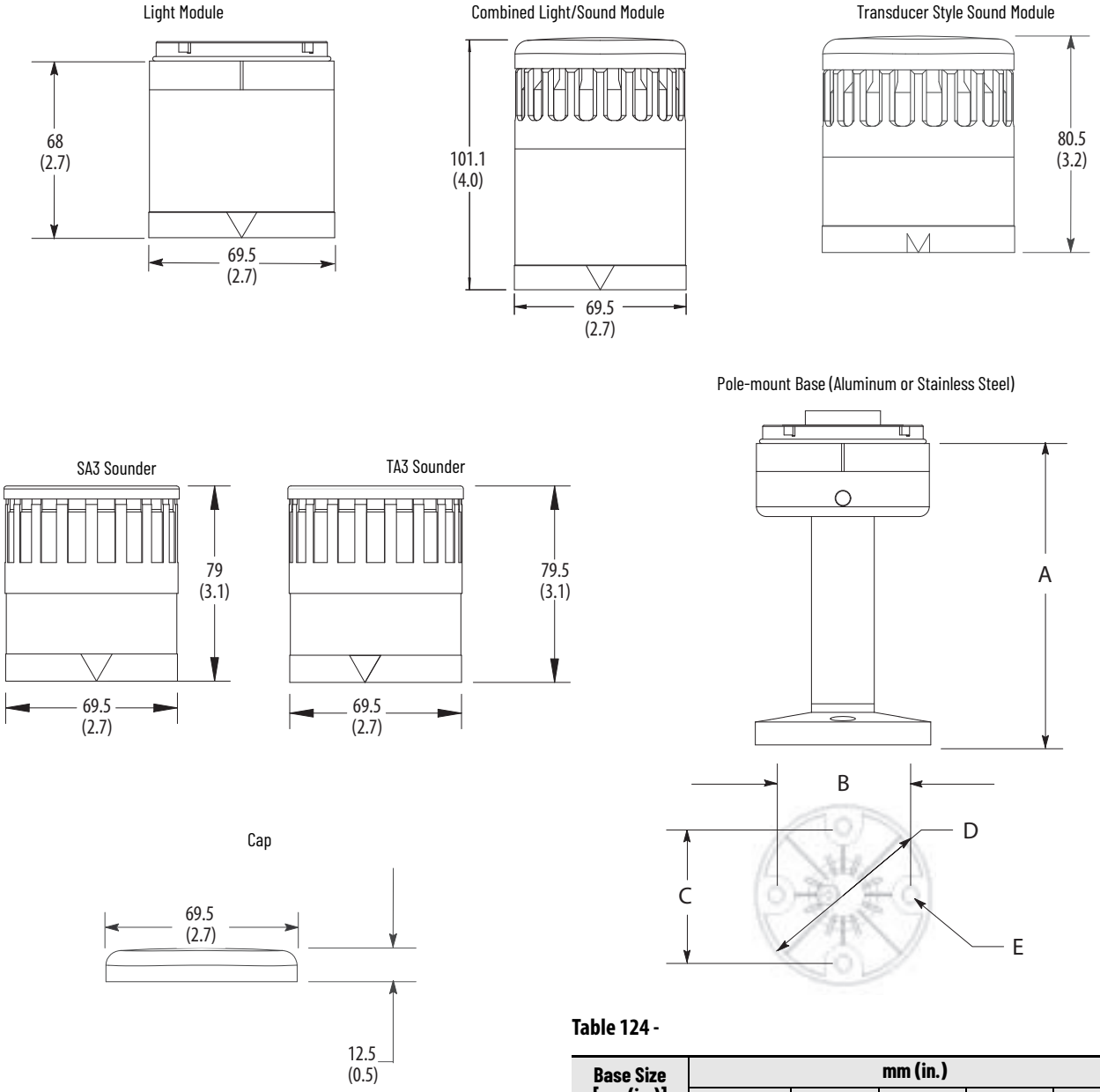


**Table 124 -**

| Base Size [cm (in.)] | mm (in.) | | | | |
|---|---|---|---|---|---|
| | A | B | C | D | E |
| 10 (3.9) | 124.5 (4.9) | 54.0 (2.1) | 54.0 (2.1) | 70.0 (2.8) | 5.0 (0.2) |
| 25 (9.8) | 274.5 (10.8) | | | | |
| 40 (15.7) | 424.5 (16.7) | | | | |
| 60 (23.6) | 624.5 (24.6) | | | | |
| 80 (31.5) | 824.5 (32.5) | | | | |

Dimensions in millimeters (inches). Dimensions are not intended to be used for manufacturing purposes.

**Figure 11 - Component and Accessory Dimensions**

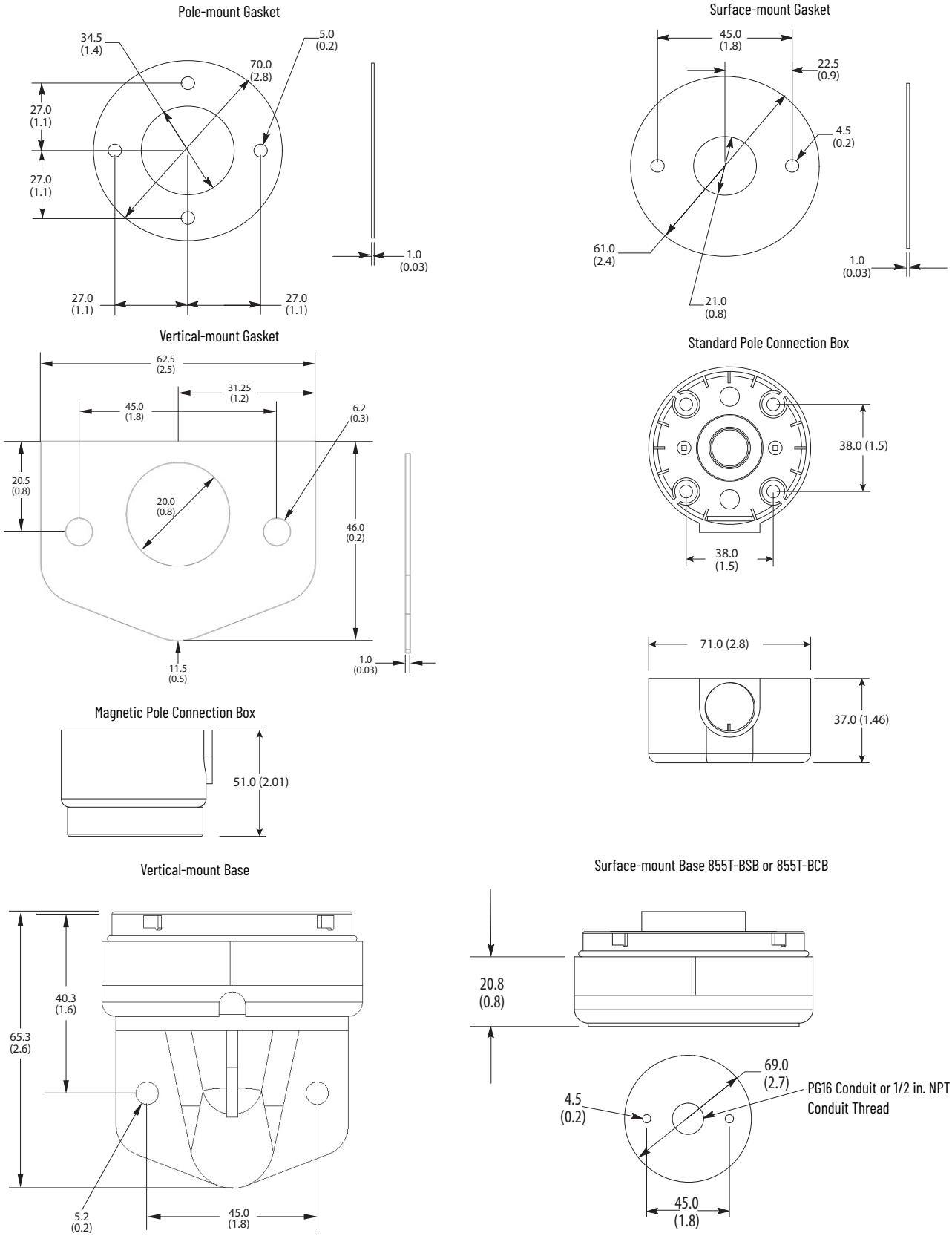

Dimensions in millimeters (inches). Dimensions are not intended to be used for manufacturing purposes.

## Figure 12 - Component and Accessory Dimensions

Catalog Number 855E-AVM Vertical-mount Bracket

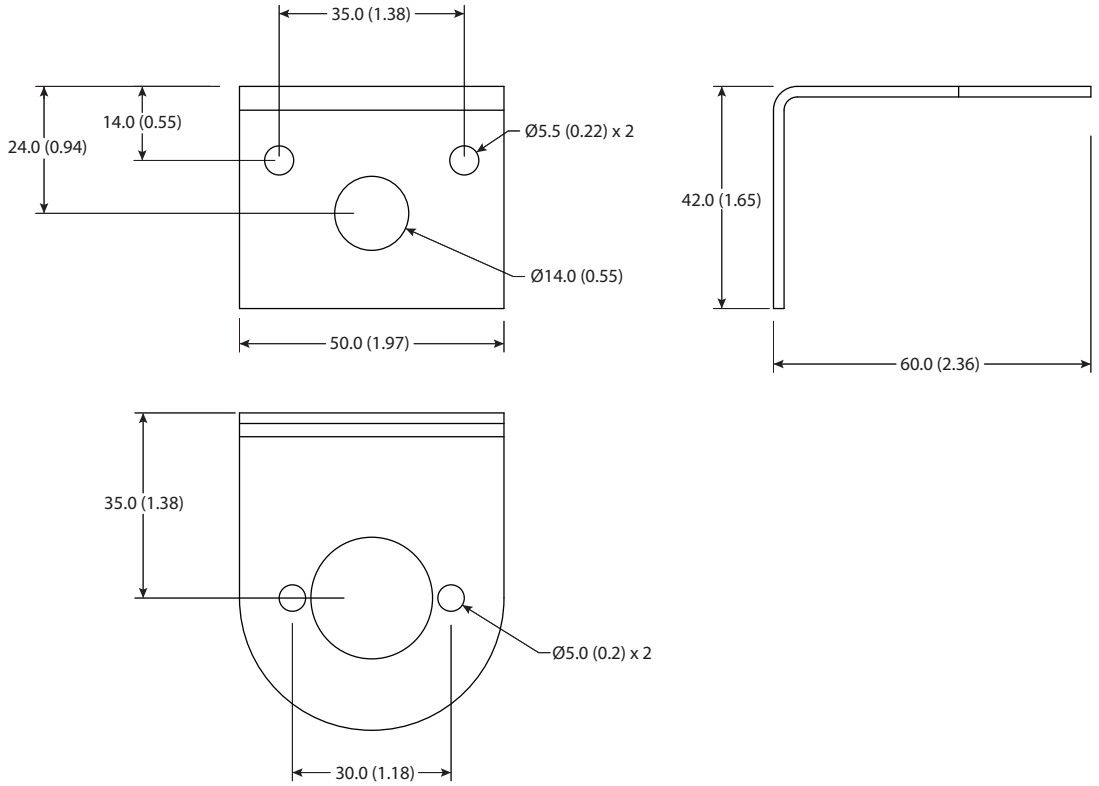


Catalog Number 855T-AVM Vertical-mount Bracket

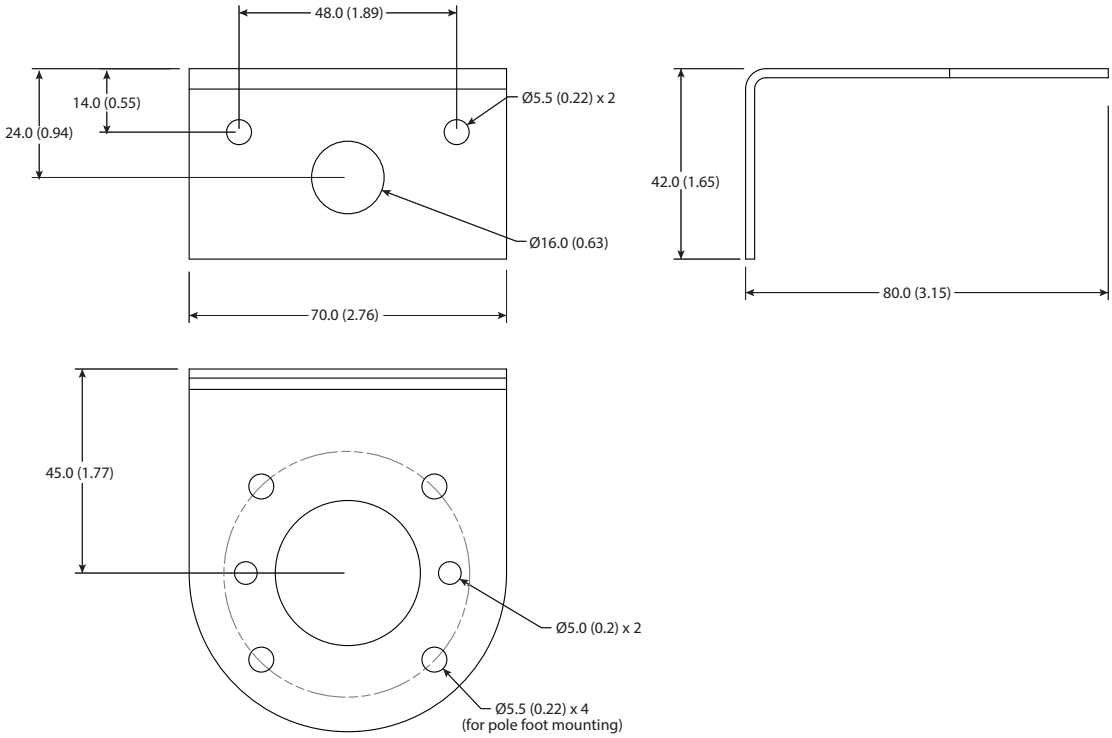

These devices give you the flexibility to meet the widest range of applications with a reduced number of components. This system uses a modular design that incorporates brighter LED illumination and a broad offering of sound technologies. All signals in the system are 24V AC/DC powered, which means that just three power modules can cover the entire system. They can be purchased as separate components or as a preconfigured, factory-assembled stack light for optimal flexibility.

## Light Modules

Steady LED Module

Multi-function LED Module

Steady/Flashing Beacon Style

**856T - B T 4**
a b c

| a | |
|---|---|
| **Housing Color** | |
| **Code** | **Description** |
| B | Black |

| b | |
|---|---|
| **Module Type** | |
| **Code** | **Description** |
| T | Steady LED |
| B | Multi-function LED steady/flashing/strobe 1/strobe 2 |
| R | Rotating LED |
| MC | 7-color LED (RGB) (1) (2) |
| GB | Steady/flashing, non-stackable beacon style |
| SB | Strobe 1/strobe 2, non-stackable beacon style (3) |
| RB | Rotating LED, non-stackable beacon style (4) |
| MB | 7-color LED (RGB), non-stackable beacon style (1) (2) |

| c | |
|---|---|
| **Output Color** | |
| **Code** | **Description** |
| 3 | Green |
| 4 | Red |
| 5 | Amber |
| 6 | Blue |
| 7 | Clear |
| 8 | Yellow |
| 9 | Magenta (5) |
| Blank | For use with Module Type MC and MB only |

(1) Output Color must be Blank (Table c).
(2) Can use three circuits to display up to seven colors, two circuits to display three colors, or one circuit to display one color.
(3) Can only be used with Output Color 4, 5, or 6 (Table c).
(4) Can only be used with Output Color 4 or 5 (Table c).
(5) Cannot be used with Module Type R and GB (Table b).

# Sound Modules

Transducer Sounder

Recordable Sounder

In-line Piezo Sounder

Top-mount Piezo Sounder

**856T - B P1**
a b

| a | |
|---|---|
| **Housing Color** | |
| **Code** | **Description** |
| B | Black |

| b | |
|---|---|
| **Module Type** | |
| **Code** | **Description** |
| P1 | Single-circuit piezo, eight tones, top mount |
| TR3 | Transducer, 16 tone tables/seven tones per table, three circuits (1) |
| PL1 | In-line piezo, single circuit, eight tones |
| H3 | Recordable sounder, up to 7 messages, three circuits (2) |

(1) Can use three circuits to play up to seven tones, two circuits to play three tones, or one circuit to play one tone.
(2) Can use three circuits to play up to seven messages, two circuits to play three messages, or one circuit to play one message

# Power Modules

24V AC/DC (seven circuits)

120/240V AC (three circuits)

120/240V AC (seven circuits)

**856T - B 24 C**
a b c

| a | |
|---|---|
| **Housing Color** | |
| **Code** | **Description** |
| B | Black |

| b | |
|---|---|
| **Voltage** | |
| **Code** | **Description** |
| 24 | 24V AC/DC, seven circuits |
| AC3 | 90...250V AC, three circuits |
| AC7 | 90...250V AC, seven circuits |

| d | |
|---|---|
| **Cap Option** | |
| **Code** | **Description** |
| C | Cap included |

# IO-Link Module

IO-Link Module

| 856T | - | B | 24 | LC |
|---|---|---|---|---|
| | | a | b | c |

| a | |
|---|---|
| Housing Color | |
| Code | Description |
| B | Black |

| b | |
|---|---|
| Voltage | |
| Code | Description |
| 24 | 24V DC |

| d | |
|---|---|
| Cap Option | |
| Code | Description |
| LC | Cap not included |

# Base Mounting Adapters

Surface 1/2 in. NPT

Surface with screws

Vertical mount

Pole mount

Threaded tube mount

| 856T | - | BMA | P10 |
|---|---|---|---|
| | | a | b |

| a | |
|---|---|
| Housing Color | |
| Code | Description |
| BMA | Black |

| b | |
|---|---|
| Mounting Style | |
| Code | Description |
| SN | NPT surface mount, Type 4/4X/13 |
| VM | Vertical mount |
| SH | Surface mount NPT, Type 4/4X/13, preinstalled mounting hardware |
| P10 | 10 cm (3.9 in.) aluminum pole mount |
| P25 | 25 cm (9.8 in.) aluminum pole mount |
| P40 | 40 cm (15.7 in.) aluminum pole mount |
| P60 | 60 cm (23.6 in.) aluminum pole mount |
| T10 | 10 cm (3.9 in.) threaded tube (M20) |
| T25 | 25 cm (9.8 in.) threaded tube (M20) |

# Preassembled Bases

Surface with M12
Micro connector (5-pin)

Surface with M12 Micro
connector (8-pin)

Catalog Number 856T-B24SNC
Surface Mount for 24V AC/DC (seven circuits)

Catalog Number 856T-BA7VMC
Vertical Mount for 120/240V AC (seven circuits)

Quick Release
Five levels (prewired)

Catalog Number 856T-BA3P10C
10 cm Pole for 120/240V AC (three circuits)

| 856T | - | | B | 24 | Q10 | C |
|---|---|---|---|---|---|---|
| | | a | b | c | d | e |

| a | |
|---|---|
| **Network Option** | |
| **Code** | **Description** |
| Blank | No network option |

| b | |
|---|---|
| **Housing Color** | |
| **Code** | **Description** |
| B | Black |

| c | |
|---|---|
| **Voltage** | |
| **Code** | **Description** |
| 24 | 24V AC/DC, seven circuits |
| A3 | 90...250V AC, three circuits |
| A7 | 90...250V AC, seven circuits |

| d | |
|---|---|
| **Mounting Style** | |
| **Code** | **Description** |
| SN | 1/2 in. NPT surface mount |
| VM | Vertical mount |
| SH | Surface mount, preinstalled mounting hardware |
| P10 | 10 cm (3.9 in.) aluminum pole mount |
| P25 | 25 cm (9.8 in.) aluminum pole mount |
| P40 | 40 cm (15.7 in.) aluminum pole mount |
| P60 | 60 cm (23.6 in.) aluminum pole mount |
| T10 | 10 cm (3.9 in.) threaded tube (M20) |
| T25 | 25 cm (9.8 in.) threaded tube (M20) |
| Q10 | 10 cm (3.9 in.) quick release (1) |
| Q25 | 25 cm (9.8 in.) quick release (1) |
| QD5 | 5-pin M12 connector, M30 mounting thread (1) |
| QD8 | 8-pin M12 connector, M30 mounting thread (1) |

(1) Can only be used with Voltage code 24 (Table c).

| e | |
|---|---|
| **Cap Option** | |
| **Code** | **Description** |
| C | Cap included |

# Pre-configured Control Tower Lights, 1...7 Modules

| 856TC - | | P10 | B | 24 | Y | 4 | B | 5 | B | 3 | R | 7 | Y | 6 | R | 8 | B | 6 |
|---|---|---|---|---|---|---|---|---|---|---|---|---|---|---|---|---|---|---|
| | a | b | c | d | e | f | e | f | e | f | e | f | e | f | e | f | e | f |
| | | | | | (Level 1, e+f) | | (Level 2, e+f) | | (Level 3, e+f) | | (Level 4, e+f) | | (Level 5, e+f) | | (Level 6, e+f) | | (Level 7, e+f) | |

| a | |
|---|---|
| **Network Options** | |
| **Code** | **Description** |
| Blank | No network option |
| L | IO-Link communication (1) |

| b | |
|---|---|
| **Base Type** | |
| **Code** | **Description** |
| SN | 1/2 in. NPT surface mount |
| VM | Vertical mount |
| SH | Surface mount, preinstalled mounting hardware |
| P10 | 10 cm (3.9 in.) aluminum pole mount |
| P25 | 25 cm (9.8 in.) aluminum pole mount |
| P40 | 40 cm (15.7 in.) aluminum pole mount |
| P60 | 60 cm (23.6 in.) aluminum pole mount |
| Q10 | 10 cm (3.9 in.) quick release (2) (3) |
| Q25 | 25 cm (9.8 in.) quick release (2) (3) |
| QD5 | 5-pin M12 connector (2) (4) |
| QD8 | 8-pin M12 connector (2) |
| T10 | 10 cm (3.9 in.) threaded tube (M20) |
| T25 | 25 cm (9.8 in.) threaded tube (M20) |
| X | No base (modules only) (5) |

| c | |
|---|---|
| **Housing Color** | |
| **Code** | **Description** |
| B | Black |

(1) IO-Link communication is available with Base Type codes SN, VM, SH, P10, P25, P40, P60, T10, and T25 only (Table b).
(2) Must be used with Voltage code 24 (Table d).
(3) Maximum number of circuits is five.
(4) Maximum number of circuits is four.
(5) Voltage code Blank (Table d) must be for this option.

| d | |
|---|---|
| **Voltage** | |
| **Code** | **Description** |
| 24 | 24V AC/DC, seven circuits (1) |
| A3 | 90...250V AC, three circuits |
| A7 | 90...250V AC, seven circuits |
| Blank | For use with Base Type code X only (Table b) |

| e | |
|---|---|
| **Module Type** | |
| **Code** | **Description** |
| Y | Steady LED |
| B | Multi-function LED steady/flashing/strobe 1/strobe 2 |
| R | Rotating |
| MC | 7-color LED (RGB) (2) (3) |
| P | Top mount piezo sounder (4) |
| T | Transducer (4) (5) |
| D | Beacon, steady/flashing (4) |
| K | Beacon, strobe 1/strobe 2 (4) (6) |
| Z | Beacon, rotating (4) (7) |
| MB | Beacon, multicolor (2) (3) (4) |
| W | In-line piezo sounder |
| H | Recordable sounder (4) (8) |

| f | |
|---|---|
| **Output Color/Sound** | |
| **Code** | **Description** |
| 1 | Sound module (9) |
| 3 | Green |
| 4 | Red |
| 5 | Amber |
| 6 | Blue |
| 7 | White |
| 8 | Yellow |
| 9 | Magenta (10) |
| Blank | For use with Module Type code MC and MB only (Table e) |

(1) For IO-link configurations, Voltage code 24 is 24V DC only.
(2) Output Color code must be Blank (Table f).
(3) Can use three circuits to display up to seven colors, two circuits to display three colors, or one circuit to display one color.
(4) Must be in top position.
(5) Can use three circuits to play up to seven tones, two circuits to play three tones, or one circuit to play one tone.
(6) Can only be used with Output Color codes 4, 5, or 6 (Table f).
(7) Can only be used with Output Color codes 4 or 5 (Table f).
(8) Can use three circuits to play up to seven messages, two circuits to play three messages, or one circuit to play one message.
(9) Can only be selected with Module Type codes P, H, T, and W (Table e).
(10) Cannot be used with Module Type codes R, D, K, and Z (Table e).

# Accessories

| | Description | Cat. No. |
|---|---|---|
| | Replacement O-ring for lenses and bases (bag of 1) | 856T-ARNG |
| | Replacement flat gasket for SN and SH surface bases (bag of 1) | 856T-ASFG |
| | Replacement vertical mount gasket (bag of 1) | 856T-AVFG |
| | Cap (black) | 856T-ABCAP |
| | Transition module for mounting Bulletin 856T modules on existing Bulletin 855T DeviceNet bases (five circuits, max) | 856T-ATM |
|  | Diffuser kit | 856T-ADK |
| | Vertical Mount Kit<br>Kit includes vertical bracket and set of three sealing washers.<br>For use with 856T and 855E pole mount bases, 856T surface mount bases, and 856T M12 QD bases. | 855T-AVM |
| | M5 x 50 mm mounting screws (bag of 4)<br>For mounting Bulletin 856T pole foot base to Bulletin 855T pole connection box | 856T-AJBS |

# Specifications

### Table 125 - Shock and Vibration (1)

| Attribute | | Based on the weight and style of mounting; tower lights are subject to damage from shock and vibration. The following are reference guidelines for maximum acceptable conditions. | | | |
|---|---|---|---|---|---|
| | | Control Tower Stack Lights | | IO-Link Module | |
| | | Shock, Peak [G] | Vibration, Peak [G] | Shock, Peak [G] | Vibration, Peak [G] |
| Surface mount base | 24V and AC three-circuit | 50 | 3 | 20 (2) | 3 (2) |
| | AC seven-circuit | 25 | 3 | — | — |
| Vertical mount base | | 50 | 3 | 50 | 3 |
| Pole/tube base | 10 cm | 50 | 3 | 50 | 3 |
| | 25 cm | 50 | 3 | 50 | 3 |
| Pole base | 40 cm | 50 | 3 | 50 | 3 |
| | 60 cm | 50 | 3 | 50 | 3 |
| QR base | | 50 | 3 | — | — |
| QD base | | 50 | 3 | — | — |
| Recommended wire size | | 24...14 AWG (UL)/0.2...1.5 $mm^2$ (IEC) (push-in type terminal block) | | | |

(1) For the IO-Link module (856T-B24LC), vibration is according to EN 60068-2-6, EN60721-3-2 Class 2M2 and shock is according to EN60068-2-27.
(2) These values are for a surface mount base with seven modules stacked. If only five modules are stacked, shock, peak = 30 G and vibration, peak = 3 G.

### Table 126 - Environmental

| Attribute | | Control Tower Stack Lights and IO-Link Module |
|---|---|---|
| Ingress ratings | | UL Type 4/4X/ 13, IP66/67 (1)<br>Suitable for indoor and outdoor use |
| Temperature ranges | Operating | -30...+70 °C (-22...+158 °F) (2) |
| | Storage | -30...+85 °C (-22...+185 °F) |
| Relative humidity | | 90% noncondensing |

(1) QR bases are IP66.
(2) -30...+45 °C (-22...+113 °F) for QD bases.

## Table 127 - Materials

| Device | Part | Material [1] |
|---|---|---|
| Control Tower stack lights | Bases, cap, sound module housing, lens, pole foot, diffuser | Polycarbonate |
| | Threaded tube/pole bases | Aluminum with clear powder coat |
| | Gaskets and O-rings | Nitrile rubber |
| | Mounting screw washers | Polypropylene |
| IO-Link module | Housing and cover | Polycarbonate |
| | M12 connector | Nylon |
| | Connector O-rings | Silicone [2] |
| | IO-Link module O-ring | Nitrile rubber |

(1) RoHS compliant
(2) The O-ring was tested to be well below 1% by weight when tested according to GMW17224 (Test for Volatiles in Silicone Rubber).

## Table 128 - Decibel Rating (Sound Modules)

| Device | Decibel Rating [1] | Volume Control | Number of Tones/Messages |
|---|---|---|---|
| 856T-BP1, piezo, top mount | 105 dB(A), max | Adjustable<br>-20 dB | 8 |
| 856T-BTR3, transducer | Rated: 105 dB(A)<br>(107 dB(A), max @ 2700 Hz) | Adjustable<br>-10 dB (also three adjustment pots for tone customization) | 80 tones, seven stages configured via DIP switch and three inputs |
| 856T-BPL1, piezo, in-line | 102 dB(A), max | Adjustable<br>-20 dB | 8 |
| 856T-BH3, recordable | Voice: 90 dB(A), max<br>Tone: 95 dB(A) | Adjustable<br>-10 dB | Plays up to seven user-recorded voice messages |

(1) All dB(A) ratings are determined at a distance of 1 m (3.3 ft) from sound module.

## Table 129 - IO-Link Module Specifications

| Attribute | | IO-Link Module (856T-B24LC) |
|---|---|---|
| Status indicator | | Bicolor (red/green) LED |
| Communication rate | | COM3 (230.4 kBd) |
| IO-Link cycle time, min | | 2 ms |
| Process data | Input bit length | 48 bits (6 Bytes) |
| | Output bit length | 56 bits (7 Bytes) |
| IO-Link standard (version) | | 1.1.2 |
| M12 connector | | 5-pin, Class B |
| MTTF | | 41,600 hr |

## Table 130 - Light Output

| Device | | Light Output [mcd] |
|---|---|---|
| **Steady** | | |
| 856T-BT3 (green) | | 7200 |
| 856T-BT4 (red) | | 5200 |
| 856T-BT5 (amber) | | 9500 |
| 856T-BT6 (blue) | | 1300 |
| 856T-BT7 (white) | | 17,200 |
| 856T-BT8 (yellow) | | 15,800 |
| 856T-BT9 (magenta) | | 5600 |
| **Multifunction** | | |
| 856T-BB3 (green) | Four functions:<br>• Steady<br>• Flashing (2 Hz)<br>• Single strobe (1.4 Hz)<br>• Double flash strobe (1.4 Hz)<br>(Selectable via DIP switches) | 12,600 |
| 856T-BB4 (red) | | 6900 |
| 856T-BB5 (amber) | | 16,700 |
| 856T-BB6 (blue) | | 2300 |
| 856T-BB7 (white) | | 30,300 |
| 856T-BB8 (yellow) | | 27,800 |
| 856T-BB9 (magenta) | | 9900 |
| **Rotating** | | |
| 856T-BR3 (green) | Two rotating speeds:<br>• Speed 1 = 90 RPM<br>• Speed 2 = 180 RPM<br>(Selectable via DIP switch) | 6300 |
| 856T-BR4 (red) | | 5000 |
| 856T-BR5 (amber) | | 8300 |
| 856T-BR6 (blue) | | 1100 |
| 856T-BR7 (white) | | 15,000 |
| 856T-BR8 (yellow) | | 13,800 |

| Device | | Light Output [mcd] |
|---|---|---|
| **Multicolor** | | |
| 856T-BMC | Seven colors:<br>• Green<br>• Red<br>• Yellow<br>• Blue<br>• White<br>• Magenta<br>• Turquoise<br>(Selectable via three inputs) | 4800 |
| **Beacon (Steady/Flashing)** | | |
| 856T-BGB3 (green) | Steady or flashing function selectable via DIP switch or by using two inputs (Flashing frequency = 2 Hz) | 8400 |
| 856T-BGB4 (red) | | 7200 |
| 856T-BGB5 (amber) | | 11,100 |
| 856T-BGB6 (blue) | | 1500 |
| 856T-BGB7 (white) | | 20,000 |
| 856T-BGB8 (yellow) | | 18,400 |
| **Beacon (Strobe)** | | |
| 856T-BSB4 (red) | Single or double strobe function selectable via DIP switch (1.4 Hz) | 10,600 |
| 856T-BSB5 (amber) | | 21,300 |
| 856T-BSB6 (blue) | | 2900 |
| **Beacon (Rotating)** | | |
| 856T-BRB4 (red) | Two speeds:<br>• Speed 1 = 90 RPM<br>• Speed 2 = 180 RPM<br>(Selectable via DIP switch) | 7500 |
| 856T-BRB5 (amber) | | 23,200 |
| **Beacon (Multicolor)** | | |
| 856T-BMB | Seven colors:<br>• Green<br>• Red<br>• Yellow<br>• Blue<br>• White<br>• Magenta<br>• Turquoise<br>(Selectable via three inputs) | 8100 |

## Table 131 - Operating Voltage (1)

| Device | Operating Voltage | |
|---|---|---|
| | Nominal Voltage | Voltage Range |
| All modules | 24V AC/DC, 50/60 Hz | 21...30V DC/<br>21.6...26.4V AC |
| 856T-B24C | | |
| 856T-BAC3C, three-circuit SMPS | 120/240V AC | 90...250V AC, 50/60Hz |
| 856T-BAC7C, seven-circuit SMPS | 120/240V AC | 90...250V AC, 50/60Hz |
| 856T-B24LC (2) | 24V DC | 18...30V DC per IO-Link specification |

(1) Maximum input switching frequency for SMPS (that is, from a PLC) is 5 Hz.
(2) At 24V DC, operating current consumption is 30 mA and inrush current is 0.1 A.

## Table 132 - Current Consumption and Life

| Device | Nominal Current | Inrush Current | Life |
|---|---|---|---|
| **Power Modules** | | | |
| 856T-B24C | — | — | — |
| 856T-BAC3C, three-circuit SMPS | 150 mA, max | 6 A, max | 30,000 hr |
| 856T-BAC7C, seven-circuit SMPS | 340 mA, max | 3.5 A, max | 30,000 hr |
| **Sound Modules** | | | |
| 856T-BP1, piezo, top mount | 120 mA | 1.8 A DC<br>2.15 A AC | 20,000 hr |
| 856T-BTR3, transducer | 200 mA | 1.06 A DC<br>1.24 A AC | 20,000 hr |
| 856T-BPL1, piezo, in-line | 120 mA | 1.8 A DC<br>2.15 A AC | 20,000 hr |
| 856T-BH3, recordable | 140 mA | 0.5A DC<br>1.0 A AC | 10,000 hr |
| **Steady Light Modules** | | | |
| 856T-BT3 (green) | 58 mA | — | >60,000 hr |
| 856T-BT4 (red) | | — | >40,000 hr |
| 856T-BT5 (amber) | | — | >60,000 hr |
| 856T-BT6 (blue) | | — | |
| 856T-BT7 (white) | | — | |
| 856T-BT8 (yellow) | | — | |
| 856T-BT9 (magenta) | | — | |
| **Multifunction Light Modules** | | | |
| 856T-BB3 (green) | 100 mA | 1.79 A DC<br>2.66 A AC | >60,000 hr |
| 856T-BB4 (red) | | 1.82 A DC<br>2.66 A AC | >40,000 hr |
| 856T-BB5 (amber) | | 1.79 A DC<br>2.66 A AC | >60,000 hr |
| 856T-BB6 (blue) | | | |
| 856T-BB7 (white) | | | |
| 856T-BB8 (yellow) | | | |
| 856T-BB9 (magenta) | | | |

| Device | Nominal Current | Inrush Current | Life |
|---|---|---|---|
| **Rotating Light Modules** | | | |
| 856T-BR3 (green) | 40 mA | 1.79 A DC<br>2.64 A AC | >60,000 hr |
| 856T-BR4 (red) | 45 mA | 1.79 A DC<br>2.66 A AC | >40,000 hr |
| 856T-BR5 (amber) | 40 mA | 1.79 A DC<br>2.64 A AC | >60,000 hr |
| 856T-BR6 (blue) | | | |
| 856T-BR7 (white) | | | |
| 856T-BR8 (yellow) | | | |
| **Multicolor Light Modules** | | | |
| 856T-BMC | 110 mA | 1.30 A DC<br>1.94 A AC | 30,000 hr |
| **Beacon Light Modules (Steady/Flashing)** | | | |
| 856T-BGB3 (green) | 100 mA | 0.74 A DC<br>1.24 A AC | >60,000 hr |
| 856T-BGB4 (red) | 108 mA | 0.70 A DC<br>1.16 A AC | >40,000 hr |
| 856T-BGB5 (amber) | 100 mA | 0.74 A DC<br>1.24 A AC | >60,000 hr |
| 856T-BGB6 (blue) | | | |
| 856T-BGB7 (white) | | | |
| 856T-BGB8 (yellow) | | | |
| **Beacon Light Modules (Strobe)** | | | |
| 856T-BSB4 (red) | 190 mA | 0.76 A DC<br>1.11 A AC | >40,000 hr |
| 856T-BSB5 (amber) | | 0.77 A DC<br>1.11 A AC | >60,000 hr |
| 856T-BSB6 (blue) | | | |
| **Beacon Light Modules (Rotating)** | | | |
| 856T-BRB4 (red) | 65 mA | 0.74 A DC<br>1.09 A AC | >40,000 hr |
| 856T-BRB5 (amber) | | 0.75 A DC<br>1.11 A AC | >60,000 hr |
| **Beacon Light Modules (Multicolor)** | | | |
| 856T-BMB | 200 mA | 1.65 A DC<br>2.46 A AC | 30,000 hr |

## Table 133 - Certifications

| 70 mm Control Tower Stack Lights | IO-Link Module (856T-B24LC) |
|---|---|
| • UL 60947-5-1<br>• CSA C22.2 No. 14<br>• CE Marked<br>– EN 60947-5-1:2004 + A1:2009<br>– EN 61000-6-2:2005<br>– EN 61000-6-3:2007 + A1:2011<br>– EN 50581: 2012<br>2014/35/EU (Low Voltage Directive)<br>2014/30/EU (EMC Directive)<br>2011/65/EU (RoHS Directive)<br>• c-UL-us Listed (File No. E14840, Guides NKCR, NKCR7)<br>• KCC (Registration No. R-REM-RAA-856T)<br>• China RoHS<br>• WEEE<br>• RCM (EN 61000-6-2:2005 and EN 61000-6-3:2007 + A1:2011) | • c-UL-us<br>• CE (EMC and RoHS)<br>• EMC compliance: 60947-5-1 standard<br>• UKCA<br>• RCM<br>• KCC<br>• Morocco |

# Approximate Dimensions

Dimensions in millimeters (inches). Dimensions are not intended to be used for manufacturing purposes.

**Figure 13 - Pole Mount Bases**

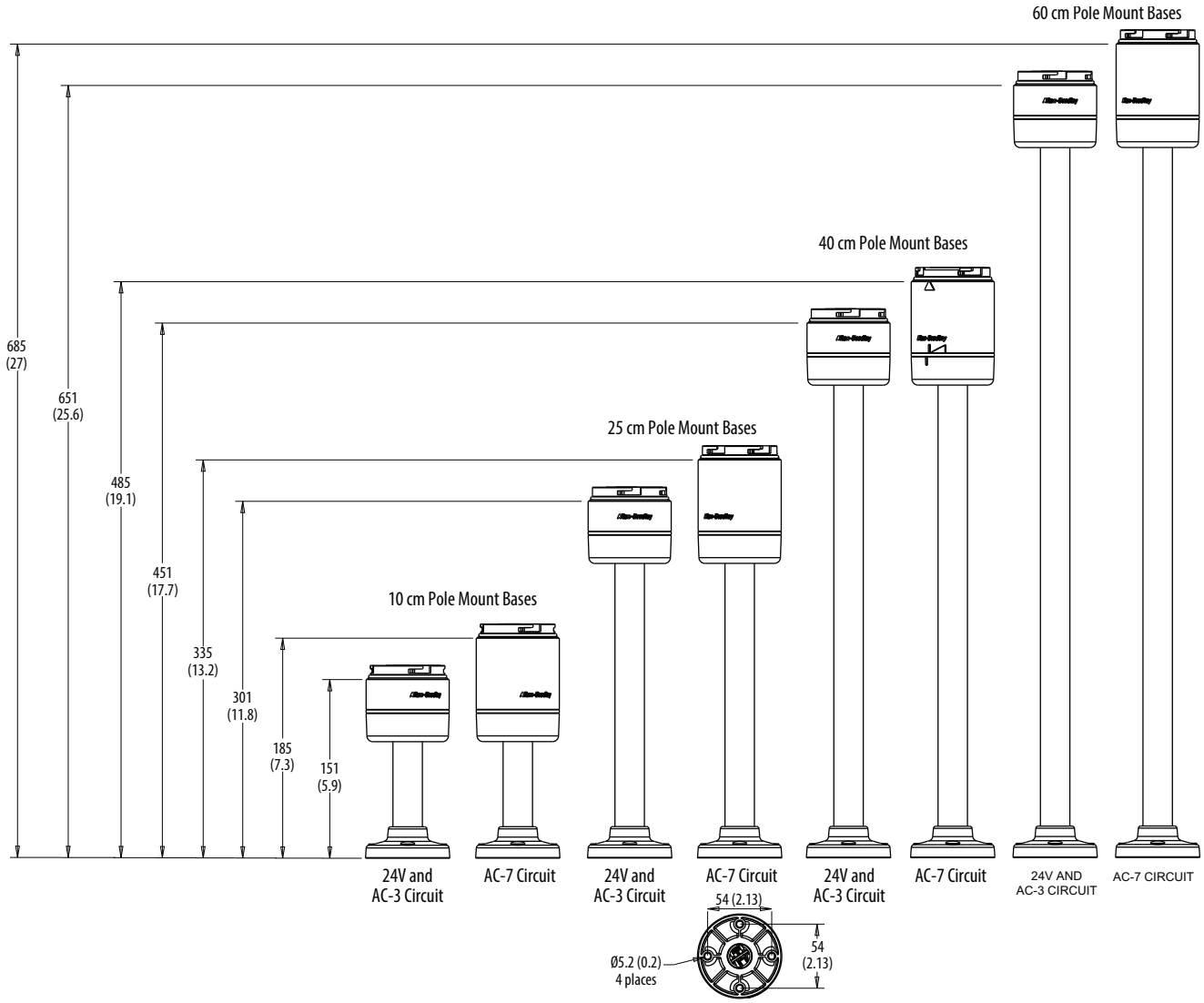

Dimensions in millimeters (inches). Dimensions are not intended to be used for manufacturing purposes.

**Figure 14 - LED Light Modules**

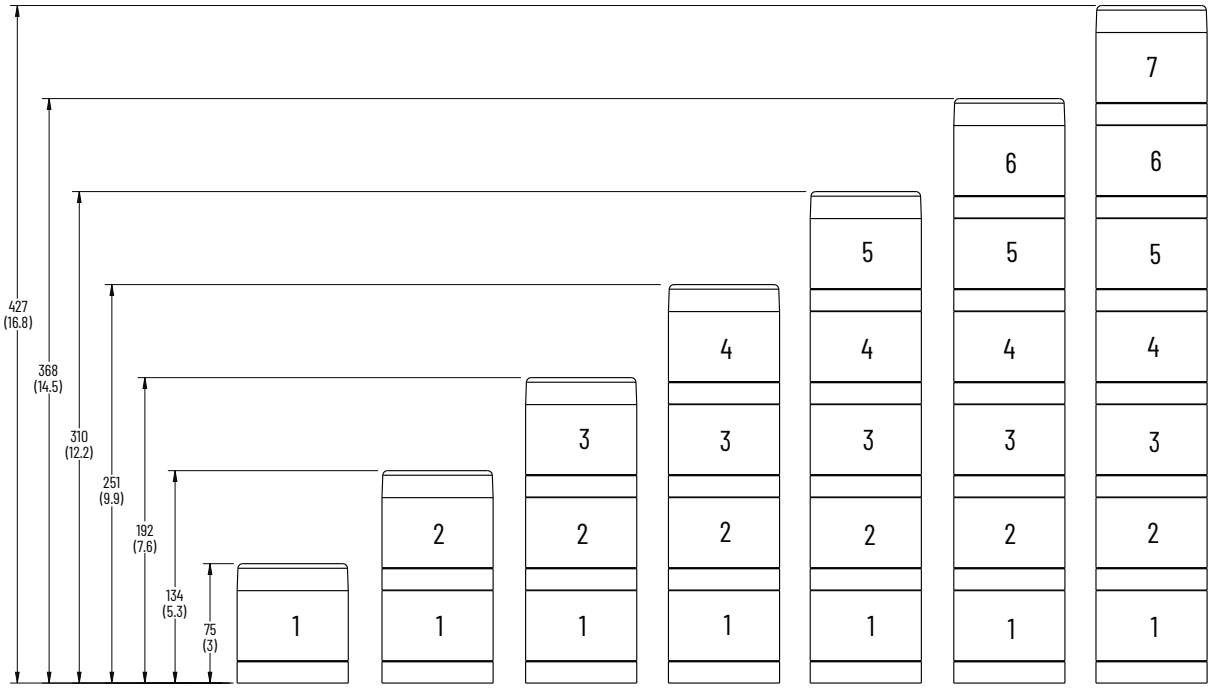


**Figure 15 - IO-Link Module Dimensions**

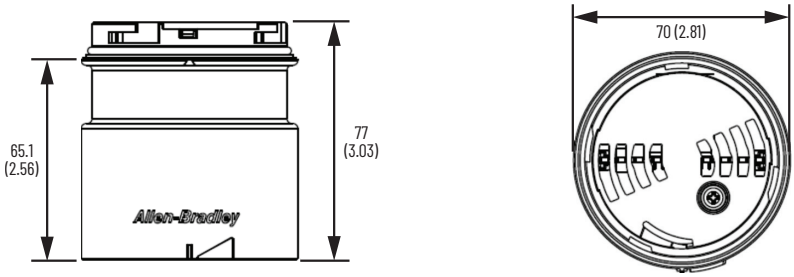


**Figure 16 - Component and Accessory Dimensions**

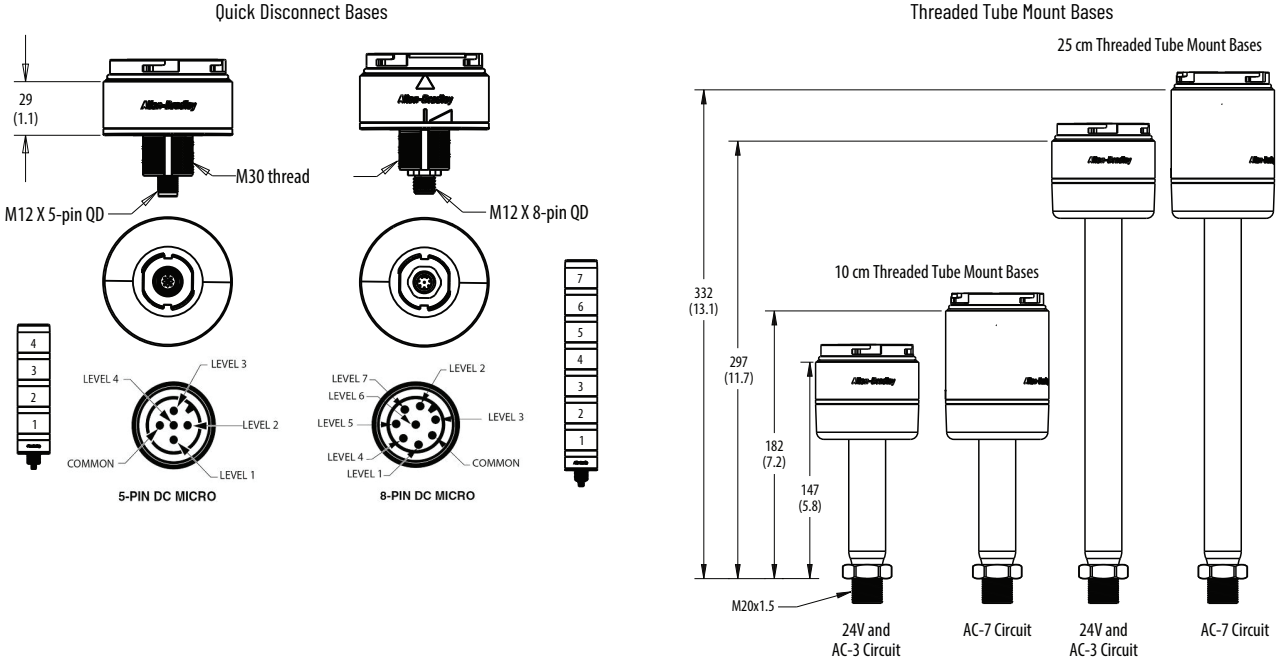

Dimensions in millimeters (inches). Dimensions are not intended to be used for manufacturing purposes.

**Figure 17 - Component and Accessory Dimensions**

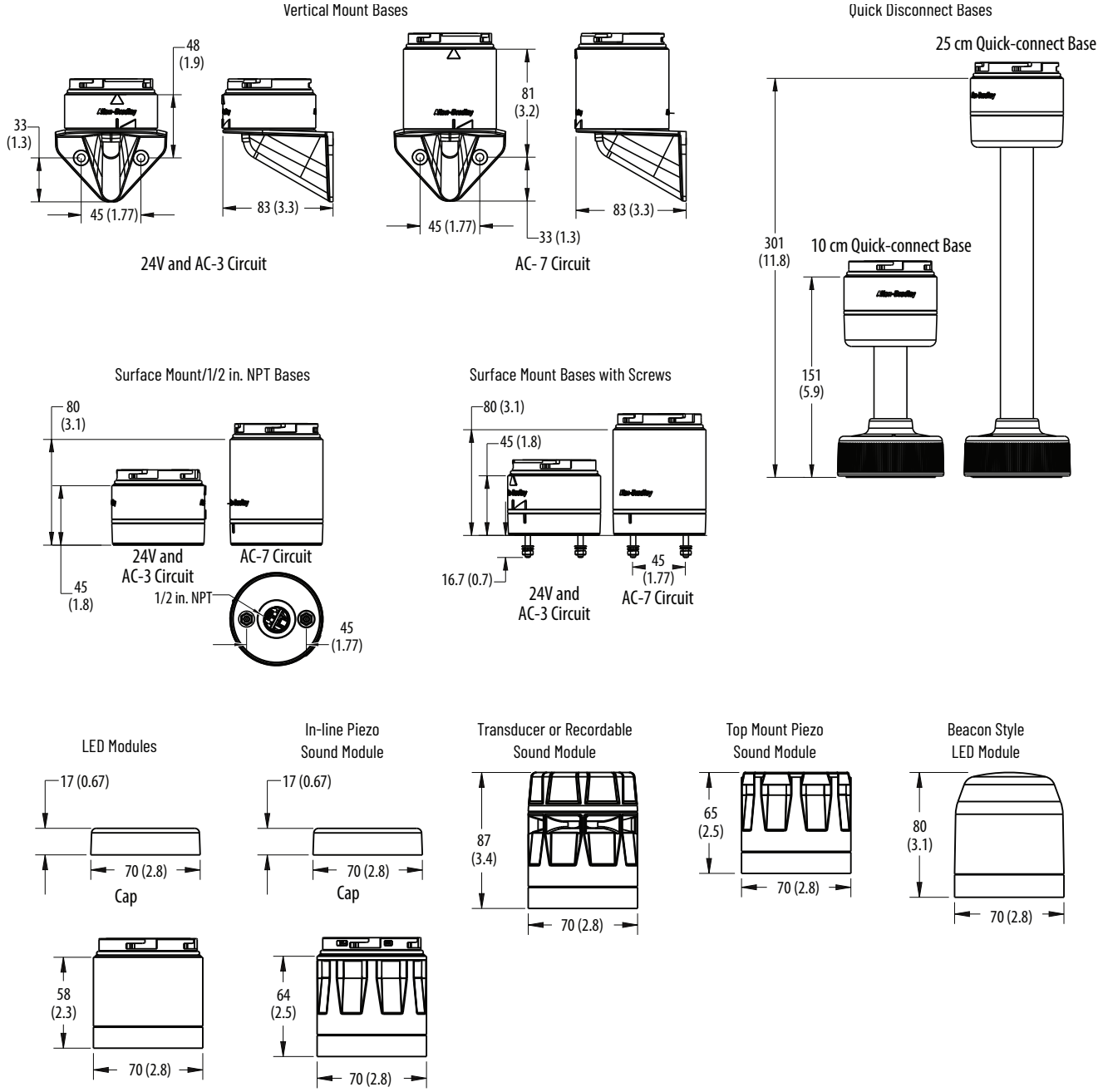

These devices are designed to communicate the status of different conditions in the machine or critical equipment in a compact size housing. Our signal lights are available in configurations from two to five light indicators with the ability to add the sound in the same unit. These devices provide the versatility to meet your application requirements without any mounting orientation restriction. We offer two color enclosures that allow you to choose the one that best fits the aesthetics of your machine or equipment.

## Pre-assembled Wall-mount Signal Lights, 2...5 Light Levels

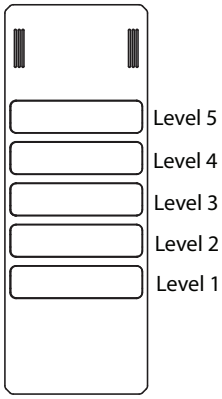

| 855W | _____ | - | G | 10 | Y | 7 | Y | 6 | Y | 3 | Y | 5 | L | 4 | P1 |
|---|---|---|---|---|---|---|---|---|---|---|---|---|---|---|---|
| | a | | b | c | d | e | d | e | d | e | d | e | d | e | f |
| | | | | | (Level 1, d+e) | | (Level 2, d+e) | | (Level 3, d+e) | | (Level 4, d+e) | | (Level 5, d+e) | | |

| a | |
|---|---|
| **Network Option** | |
| **Code** | **Description** |
| Blank | No network option |

| b | |
|---|---|
| **Housing Color** | |
| **Code** | **Description** |
| C | Chrome plated |
| G | Gray |

| c | |
|---|---|
| **Voltage** | |
| **Code** | **Description** |
| 24 | 24V AC/DC |
| 10 | 120V AC |
| 20 | 240V AC |

| d | |
|---|---|
| **Module Type** | |
| **Code** | **Description** |
| Y | Steady LED |
| L | Flashing LED |

| e | |
|---|---|
| **Lens Color** | |
| **Code** | **Description** |
| 3 | Green |
| 4 | Red |
| 5 | Amber |
| 6 | Blue |
| 7 | Clear |
| 8 | Yellow |

| f | |
|---|---|
| **Sound** | |
| **Code** | **Description** |
| Blank | No sound |
| P1 | Piezo sounder (continuous/pulsing) |

# Specifications

## Table 134 - Environmental

| Attribute | | Value |
|---|---|---|
| Ingress ratings | Light/sound modules | UL Type 4/4X/13, IP65 |
| Temperature ranges | Operating | -25...+50 °C (-13...+122 °F) |
| | Storage | -25...+85 °C (-13...+185 °F) |

## Table 135 - Materials

| Part | Material |
|---|---|
| Lenses and base | Polycarbonate (94V-0) |
| Cover | ABS |
| Rubber seals and gaskets | NBR 70 |

## Table 136 - Operating Voltage

| Device | Operating Voltage | | |
|---|---|---|---|
| | 24V AC/DC | 120V AC | 240V AC |
| Light modules and sound modules | 24V AC/DC (±10%) | 110V AC, 50 Hz (±10%)<br>120V AC, 60 Hz (±10%) | 230V AC, 50 Hz (±10%)<br>240V AC, 60 Hz (±10%) |

## Table 137 - Current Consumption

| Device | Current Consumption [mA] | | |
|---|---|---|---|
| | 24V AC/DC | 120V AC | 240V AC |
| Steady or flashing LED | 43 mA per channel, max | 33 mA per channel, max | 30 mA per channel, max |
| Piezo sounder | 62 | 24 | 24 |

## Table 138 - Leakage Current Impact

| |
|---|
| All light and sound modules can absorb up to 3 mA of leakage current from solid-state outputs without module activation. |

## Table 139 - Mechanical

| Attribute | | Value |
|---|---|---|
| Design life rating (average life under static, no vibration conditions) | Steady or flashing LED | 30,000...50,000 hr |
| | Piezo sounder | >10,000 hr |
| Frequency | Flashing LED | 2 Hz |
| Decibel rating | Piezo sounder | 90 dB(A) (potentiometer adjustable down to 70 dB(A))<br>All dB(A) ratings are determined at a distance of 1 m (3.3 ft) from the sound module |

# Approximate Dimensions

Dimensions in millimeters (inches). Dimensions are not intended to be used for manufacturing purposes.

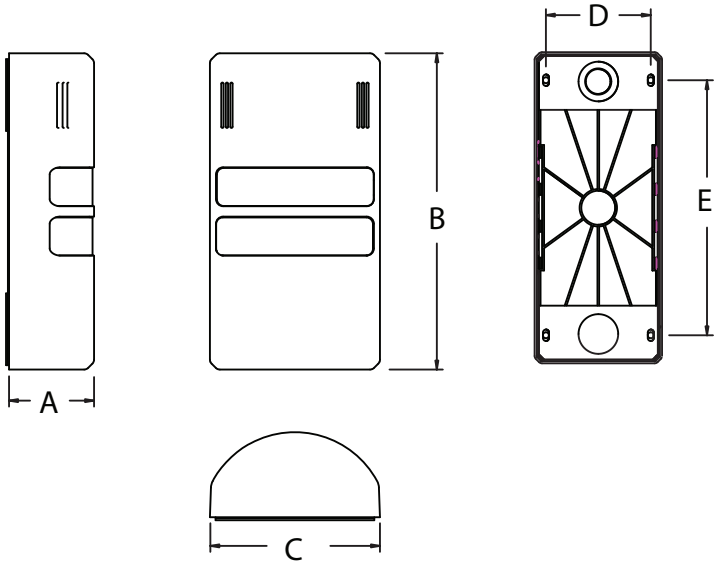


| Number of Levels | Dimension A [mm (in.)] | Dimension B [mm (in.)] | Dimension C [mm (in.)] | Dimension D [mm (in.)] | Dimension E [mm (in.)] |
|---|---|---|---|---|---|
| 2 | 45 (1.77) | 167.4 (6.59) | 90 (3.54) | 74 (2.91) | 125 (4.92) |
| 3 | | 193.5 (7.62) | | | 150 (5.91) |
| 4 | | 219.6 (8.65) | | | 180 (7.09) |
| 5 | | 245.7 (9.67) | | | 210 (8.27) |

These devices are designed to alert you to critical equipment and system needs on the plant floor. These alarms are available in a wide variety of light and sound functions, sizes, colors, voltages, and mounting options. These devices are also offered pre-assembled to save time.

- Provides low power consumption and long life
- Offers horn only or horn and attached beacon with six lens colors
- Offers 24V DC, 120V AC, and 240V AC voltage options
- Includes glass reinforced plastic and impact resistant ABS enclosure
- Offers -20...+55 °C (-4...+131 °F) operating temperature for Class 1 Division 2
- NEMA Type 4/4X/13, IP 66/67 certified
- UL listed, ATEX/IECEx certified

## Alarm Horn Sounders

| 855XH | - | BN | D30 | B |
|---|---|---|---|---|
| | | a | b | c |

| a | |
|---|---|
| **Product Type** | |
| **Code** | **Description** |
| BN | 1/2 in. NPT and M20x1.5 conduit entrance, black housing |

| b | |
|---|---|
| **Voltage** | |
| **Code** | **Description** |
| D30 | 10...30V DC |
| A10 | 115...120V AC |
| A20 | 220...230V AC |

| c | |
|---|---|
| **Horn Type** | |
| **Code** | **Description** |
| A | 110 dB @ 1 m (3.3 ft), 45 tone, 3 stage |
| B | 117 dB @ 1 m (3.3 ft), 45 tone, 3 stage |

# Xenon Strobe Beacons

| 855XB | - | BN | A10 | B | 4 |
|---|---|---|---|---|---|
| | | a | b | c | d |

| a | |
|---|---|
| Product Type | |
| Code | Description |
| BN | 1/2 in. NPT and M20x1.5 conduit entrance, black housing |

| b | |
|---|---|
| Voltage | |
| Code | Description |
| D24 | 24V DC |
| A10 | 115...120V AC |
| A20 | 220...230V AC |

| c | |
|---|---|
| Beacon Type | |
| Code | Description |
| A | Xenon strobe - 5 J, 1 Hz |
| B | Xenon strobe - 10 J, 1 Hz |
| L | LED - multifunction |

| c | |
|---|---|
| Lens Color | |
| Code | Description |
| 4 | Red |
| 5 | Amber |
| 7 | Clear |

# Combined Horn Sounder and Strobe Beacons

Xenon/Flare

LED/Radial

| 855XC | - | BN | A10 | A | 3 |
|---|---|---|---|---|---|
| | | a | b | c | d |

| a | |
|---|---|
| Product Type | |
| Code | Description |
| BN | 1/2 in. NPT and M20x1.5 conduit entrance, black housing |

| b | |
|---|---|
| Voltage | |
| Code | Description |
| D24 | 24V DC |
| A10 | 115...120V AC |
| A20 | 220...230V AC |

| c | |
|---|---|
| Horn/Beacon Type | |
| Code | Description |
| A | Xenon strobe - 5 J, Flare horn 110 dB @ 1 m (3.3 ft), 45 tones, 3 stages |
| RL | LED - multifunction Radial horn 110dB @ 1 m (3.3 ft), 45 tones, 3 stages |

| c | |
|---|---|
| Lens Color | |
| Code | Description |
| 4 | Red |
| 5 | Amber |
| 7 | Clear |

# Specifications

### Table 140 - Mechanical (Bul. 855XH, 855XB, and 855XC)

| Attribute | Value |
|---|---|
| Shock | 30 G peak |
| Vibration | 2 G peak |

### Table 141 - Environmental (Bul. 855XH, 855XB, and 855XC)

| Attribute | | Value |
|---|---|---|
| Ingress ratings | | UL Type 4/4X13, IP 66/67 |
| Temperature ranges | Operating | -20...+55 °C (-4...+131 °F) |
| | Storage | -40...+70 °C (-40...+158 °F) |
| Relative humidity | | 90% at 20 °C (68 °F) |

### Table 142 - Materials (Bul. 855XH, 855XB, and 855XC)

| Part | | Value |
|---|---|---|
| Housing | | PPS: RYTON type R-4 02 XT |
| Lens | | Polycarbonate over glass |
| Lens cage | | Stainless steel 304/A2 |
| Mounting bracket | | Stainless steel 304/A3 |
| O-ring | | Viton (housing and glass dome) |
| Horn | Flare | Polycarbonate |
| | Radial | Stat-Kon |
| Screws, washers, and nuts | | Stainless steel 302/304 |
| Dome glass | | Borosilicate glass |
| Cemented joint material (1) | | Moisture-cure silicon adhesive 7091 |

(1) Horn (855XH) and combo (855XC) only.

### Table 143 - Performance Ratings

| Attribute | 855XH (1) | | 855XC |
|---|---|---|---|
| | 855XH-BNxxxAy | 855XH-BNxxxBy | |
| Sound output @ 1 m (3.3 ft) (2) | 110 dB(A) | 117 dB(A) | 110 dB(A) |
| Volume control | Adjustable -8 dB | | Adjustable -8 dB |
| Number of tones | 45 | | 45 |
| Stages | 3 | | 3 |

(1) Replace the *y* with color code: Red (4), Amber (5), or Clear (7).
(2) SPL data ±3dB(A). Measured at optimum voltage.

### Table 144 - Light Output

| Attribute | 855XB-BNxxxAy 855XC-BNxxxAy (Xenon 5J) (1) | 855XB-BNxxxBy (Xenon 10J) (1) | 855XB-BNxxxLy 855XC-BNxxxRLy (LED) (1) |
|---|---|---|---|
| Measured ref. to I.E.S. (2) | 34,122 cd peak<br>108 cd effective | 61,164 cd peak<br>272 cd effective | 87 cd effective (high power steady)<br>160 cd effective (1 Hz flash) |
| Calculated from energy [J] | 500,000 cd peak<br>250 cd effective | 1,00,000 cd peak<br>500 cd effective | — |

(1) Replace the *y* with color code: Red (4), Amber (5), or Clear (7).
(2) All candela data is representative of performance with clear lens at optimum voltage

### Table 145 - Beacon Flashing Frequency

| Device (1) | Flashing Frequency |
|---|---|
| 855XB-BNxxxAy<br>855XC-BNxxxAy | 1 Hz |
| 855XB-BNxxxBy | 1 Hz |
| 855XB-BND24Ly<br>855XC-BND24Ly | High: Steady, 1 Hz, 2 Hz, 2X, 3X, 80FPM<br>Low: Steady (S1) + 1 Hz flashing (S2) + 3X (S3) |
| 855XB-BNA10Ly<br>855XC-BNA10Ly | High: Steady, 1 Hz, 2 Hz, 2X, 3X, 80FPM<br>Low: Steady |
| 855XB-BNA20Ly<br>855XC-BNA20Ly | High: Steady, 1 Hz, 2 Hz, 2X, 3X, 80FPM<br>Low: Steady |

(1) Replace the *y* with color code: Red (4), Amber (5), or Clear (7).

## Table 146 - Operating Voltage and Current Consumption

| Cat. No. (1) | Operating Voltage | Current Consumption, Nom | Inrush Current | Leakage Immunity |
|---|---|---|---|---|
| 855XH-BND30A | 10...30V DC | 284 mA | 16.79 A @ 0.29 ms | >3mA |
| 855XH-BNA10A | 115V AC 50/60Hz ±10% | 104 mA | 1.235 A @ 6.72 ms | >3 mA |
| 855XH-BNA20A | 230V AC 50/60Hz ±10% | 54 mA | 1.413 A @ 0.576 ms | >3mA |
| 855XH-BND30B | 10...30V DC | 280 mA | 13.53 A @ 0.19 ms | >3 mA |
| 855XH-BNA10B | 115V AC 50/60Hz ±10% | 142 mA | 1.405 A @ 4.03 ms | >3 mA |
| 855XH-BNA20B | 230V AC 50/60Hz ±10% | 76 mA | 1.722 A @ 0.96 ms | >3 mA |
| 855XB-BND24Ay | 20...28V DC | 275 mA | 6.40 A @ 1.15 ms | >3 mA |
| 855XB-BNA10Ay | 115V AC 50/60Hz ±10% | 80 mA | 963 mA @ 3.07 ms | >3 mA |
| 855XB-BNA20Ay | 230V AC 50/60Hz ±10% | 30 mA | 630 mA @ 0.58 ms | >3 mA |
| 855XB-BND24By | 20...28V DC | 560 mA | 6.71 A @ 0.77 ms | >3 mA |
| 855XB-BNA10By | 115V AC 50/60Hz ±10% | 185 mA | 739 mA @ 3.07 ms | >3 mA |
| 855XB-BNA20By | 230V AC 50/60Hz ±10% | 107 mA | 993 mA @ 1.15 ms | >3 mA |
| 855XB-BND24Ly | 18...54V DC | 240 mA (Steady high power)<br>134 mA (Steady low power)<br>110 mA (1Hz Flashing) | 1.9A @ 1.6 ms | >3 mA |
| 855XB-BNA10Ly | 103.5...126.5V AC 50/60 Hz | 95 mA (Steady high power)<br>78 mA (Steady low power)<br>90 mA (1Hz Flashing) | 1.04 A @ 11.1ms | >3mA (horn)<br>3 mA @ <13V AC (LED) |
| 855XB-BNA20Ly | 207...253V AC 50/60 Hz | 48 mA (Steady high power)<br>37 mA (Steady low power)<br>45 mA (1Hz Flashing) | 0.61 A @ 11.5ms | >3mA (horn)<br>3 mA @ <40V AC (LED) |
| 855XC-BND24Ay | 10...30V DC Horn<br>20...28V DC Beacon | 284 mA Horn<br>275 mA Beacon | 16.79 A @ 0.29 ms (horn)<br>6.40 A @ 1.15 ms (beacon) | >3 mA |
| 855XC-BNA10Ay | 115V AC 50/60Hz ±10% | 104 mA Horn<br>80 mA Beacon | 1.235 A @ 6.72 ms (horn)<br>963 mA @ 3.07 ms (beacon) | >3 mA |
| 855XC-BNA20Ay | 230V AC 50/60Hz ±10% | 54 mA Horn<br>30 mA Beacon | 1.413 A @ 0.576 ms (horn)<br>630 mA @ 0.58 ms (beacon) | >3 mA |
| 855XC-BND24RLy | 24V DC ±25% Horn<br>18...54V DC Beacon | 265 mA Horn<br>240 mA (LED-Steady high power)<br>134 mA (LED-Steady low power)<br>110 mA (LED-1Hz Flashing) | 16.79 A @ 0.29 ms (horn)<br>1.9 A @ 1.6 ms (beacon) | >3 mA |
| 855XC-BNA10RLy | 115V AC 50/60Hz ±10% | 110 mA Horn<br>95 mA (LED-Steady high power)<br>78 mA (LED-Steady low power)<br>90 mA (LED-1Hz Flashing) | 1.235 A @ 6.72 ms (horn)<br>1.04 A @ 11.1 ms (beacon) | 3 mA @ <13V AC |
| 855XC-BNA20RLy | 230V AC 50/60Hz ±10% | 56 mA horn<br>48 mA (LED-Steady high power)<br>37 mA (LED-Steady low power)<br>45 mA (LED-1Hz Flashing) | 1.413 A @ 0.576 ms (horn)<br>0.61 A @ 11.5 ms (beacon) | 3 mA @ <40V AC |

(1) Replace the *y* with color code: Red (4), Amber (5), or Clear (7).

## Table 147 - Wiring

| Haz Loc Device (1) | Tightening Torque [N•m (lb•in)] | Wire Strip Length [mm (in.)] | Wire Cross Section | AWG (Solid/Stranded) | Voltage Rating | Temperature |
|---|---|---|---|---|---|---|
| 855XH-BN*xxx*A | 0.45 (4) | 8 (0.31) | 0.2...4.0 mm² | 12...30 | 300V | -30...+105 °C (-22...+221 °F) |
| 855XH-BN*xxx*B | | | | | | |
| 855XC-BN*xxx*Ay (beacon PCB) | 0.56 (5) | 7...8 (0.28...0.31) | | 12...24 | | -40...+115 °C (-40...+239 °F) |
| 855XC-BN*xxx*Ay (horn PCB) | 0.45 (4) | 8 (0.31) | | 12...30 | | -30...+105 °C (-22...+221 °F) |
| 855XC-BN*xxx*RLy (beacon PCB) | 0.56 (5) | 7...8 (0.28...0.31) | | 12...24 | | -40...+115 °C (-40...+239 °F) |
| 855XC-BN*xxx*RLy (horn PCB) | 0.45 (4) | 8 (0.31) | | 12...30 | | -30...+105 °C (-22...+221 °F) |
| 855XB-BN*xxx*Ay | 0.56 (5) | 7...8 (0.28...0.31) | | 12...24 | | -40...+115 °C (-40...+239 °F) |
| 855XB-BN*xxx*By | | | | | | |
| 855XB-BN*xxx*RLy | | | | | | |

(1) Replace the *y* with color code: Red (4), Amber (5), or Clear (7).

## Table 148 - Hazardous Location Certifications

| Cat. No. | Description | ATEX/IECEx | NEC Class/Zone | CEC Class/Zone | Class/Div |
|---|---|---|---|---|---|
| 855XH-BND30A<br>855XH-BNA10A<br>855XH-BNA20A | Flare 110dB | • II 3G Ex nA IIC T4 Gc<br>Ta -20...+55 °C (-4...+131 °F)<br>• II 3D Ex tc IIIC T85 °C Dc<br>Ta -20...+55 °C (-4...+131 °F) | • Class I Zone 2 AEx nA IIC T4 Gc<br>Ta -20...+55 °C (-4...+131 °F)<br>• Zone 22 AEx tc IIIC T85°C Dc<br>Ta -20...+55 °C (-4...+131 °F) | • Ex nA IIC T4 Gc<br>Ta -20...+55 °C (-4...+131 °F)<br>• Ex tc IIIC T85°C Dc<br>Ta -20...+55 °C (-4...+131 °F) | • Class I, Div 2, ABCD T3C<br>Ta -20...+55 °C (-4...+131 °F)<br>• Class I, Div 2, ABCD T4<br>Ta -20...+40 °C (-4...+104 °F)<br>• Class II, Div 2, FG T6<br>Ta -20...+55 °C (-4...+131 °F)<br>• Class III T6<br>Ta -20...+55 °C (-4...+131 °F) |
| 855XH-BND30B<br>855XH-BNA10B<br>855XH-BNA20B | Flare 117dB | • II 3G Ex nA IIC T4 Gc<br>Ta -20...+55 °C (-4...+131 °F)<br>• II 3D Ex tc IIIC T85°C Dc<br>Ta -20...+55 °C (-4...+131 °F) | • Class I Zone 2 AEx nA IIC T4 Gc<br>Ta -20...+55 °C (-4...+131 °F)<br>• Zone 22 AEx tc IIIC T85°C Dc<br>Ta -20...+55 °C (-4...+131 °F) | • Ex nA IIC T4 Gc<br>Ta -20...+55 °C (-4...+131 °F)<br>• Ex tc IIIC T85°C Dc<br>Ta -20...+55 °C (-4...+131 °F) | • Class I, Div 2, ABCD T3C<br>Ta -20...+55 °C (-4...+131 °F)<br>• Class I, Div 2, ABCD T4<br>Ta -20...+40 °C (-4...+104 °F)<br>• Class II, Div 2, FG T6<br>Ta -20...+55 °C (-4...+131 °F)<br>• Class III<br>Ta -20...+55 °C (-4...+131 °F) |
| 855XB-BND24A*<br>855XB-BNA10A*<br>855XB-BNA20A* | Xenon 5J beacon | • II 3G Ex nA IIC T3 Gc<br>Ta -20...+40 °C (-4...+104 °F)<br>• II 3G Ex nA IIC T2 Gc<br>Ta -20...+55 °C (-4...+131 °F)<br>• II 3D Ex tc IIIC 85°C Dc<br>Ta -20...+40 °C (-4...+104 °F)<br>• II 3D Ex tc IIIC 100°C Dc<br>Ta -20...+55 °C (-4...+131 °F) | • Class I Zone 2 AEx nA IIC T3 Gc<br>Ta -20...+40 °C (-4...+104 °F)<br>• Class I Zone 2 AEx nA IIC T2 Gc<br>Ta -20...+55 °C (-4...+131 °F)<br>• Zone 22 AEx tc IIIC 85°C Dc<br>Ta -20...+40 °C (-4...+104 °F)<br>• Zone 22 AEx tc IIIC 100°C Dc<br>Ta -20...+55 °C (-4...+131 °F) | • Class I Zone 2 Ex nA IIC T3 Gc<br>Ta -20...+40 °C (-4...+104 °F)<br>• Class I Zone 2 Ex nA IIC T2 Gc<br>Ta -20...+55 °C (-4...+131 °F)<br>• Zone 22 Ex tc IIIC 85°C Dc<br>Ta -20...+40 °C (-4...+104 °F)<br>• Zone 22 Ex tc IIIC 100°C Dc<br>Ta -20...+55 °C (-4...+131 °F) | • Class I, Div 2, ABCD T2D<br>Ta -20...+55 °C (-4...+131 °F)<br>• Class I, Div 2, ABCD T3<br>Ta -20...+40 °C (-4...+104 °F)<br>• Class II, Div 2, FG T5<br>Ta -20...+55 °C (-4...+131 °F)<br>• Class II, Div 2, FG T6<br>Ta -20...+40 °C (-4...+104 °F)<br>• Class III<br>Ta -20...+55 °C (-4...+131 °F) |
| 855XB-BND24B*<br>855XB-BNA10B*<br>855XB-BNA20B* | Xenon 10J beacon | • II 3G Ex nA IIC T2 Gc<br>Ta -20...+55 °C (-4...+131 °F)<br>• II 3D Ex tc IIIC 105°C Dc<br>Ta -20...+40 °C (-4...+104 °F)<br>• II 3D Ex tc IIIC 120°C Dc<br>Ta -20...+55 °C (-4...+131 °F) | • Class I Zone 2 AEx nA IIC T2 Gc<br>Ta -20...+55 °C (-4...+131 °F)<br>• Zone 22 AEx tc IIIC 105°C Dc<br>Ta -20...+40 °C (-4...+104 °F)<br>• Zone 22 AEx tc IIIC 120°C Dc<br>Ta -20...+55 °C (-4...+131 °F) | • Class I Zone 2 Ex nA IIC T2 Gc<br>Ta -20...+55 °C (-4...+131 °F)<br>• Class I Zone 2 Ex nA IIC T2 Gc<br>Ta -20...+55 °C (-4...+131 °F)<br>• Zone 22 Ex tc IIIC 105°C Dc<br>Ta -20...+40 °C (-4...+104 °F) | • Class I, Div 2, ABCD T2C<br>Ta -20...+55 °C (-4...+131 °F)<br>• Class I, Div 2, ABCD T2D<br>Ta -20...+40 °C (-4...+104 °F)<br>• Class II, Div 2, FG T5<br>Ta -20...+55 °C (-4...+131 °F)<br>• Class II, Div 2, FG T6<br>Ta -20...+40 °C (-4...+104 °F)<br>• Class III<br>Ta -20...+55 °C (-4...+131 °F) |
| 855XC-BND24A*<br>855XC-BNA10A*<br>855XC-BNA20A* | Combo-flare with 5J xenon | • II 3G Ex nA IIC T3 Gc<br>Ta -20...+40 °C (-4...+104 °F)<br>• II 3G Ex nA IIC T2 Gc<br>Ta -20...+55 °C (-4...+131 °F)<br>• II 3D Ex tc IIIC 85°C Dc<br>Ta -20...+40 °C (-4...+104 °F)<br>• II 3D Ex tc IIIC 100°C Dc<br>Ta -20...+55 °C (-4...+131 °F) | • Class I Zone 2 AEx nA IIC T3 Gc<br>Ta -20...+40 °C (-4...+104 °F)<br>• Class I Zone 2 AEx nA IIC T2 Gc<br>Ta -20...+55 °C (-4...+131 °F)<br>• Zone 22 AEx tc IIIC 85°C Dc<br>Ta -20...+40 °C (-4...+104 °F)<br>• Zone 22 AEx tc IIIC 100°C Dc<br>Ta -20...+55 °C (-4...+131 °F) | • Ex nA IIC T3 Gc<br>Ta -20...+40 °C (-4...+104 °F)<br>• Ex nA IIC T2 Gc<br>Ta -20...+55 °C (-4...+131 °F)<br>• Ex tc IIIC 85°C Dc<br>Ta -20...+40 °C (-4...+104 °F)<br>• Ex tc IIIC 100°C Dc<br>Ta -20...+55 °C (-4...+131 °F) | • Class I, Div 2, ABCD T2D<br>Ta -20...+55 °C (-4...+131 °F)<br>• Class I, Div 2, ABCD T3<br>Ta -20...+40 °C (-4...+104 °F)<br>• Class II, Div 2, FG T5<br>Ta -20...+55 °C (-4...+131 °F)<br>• Class II, Div 2, FG T6<br>Ta -20...+40 °C (-4...+104 °F)<br>• Class III, Div 1&2<br>Ta -20...+55 °C (-4...+131 °F) |
| 855XB-BND24L*<br>855XB-BNA10L*<br>855XB-BNA20L* | LED beacon | • II 3G Ex nA IIC Gc T4<br>Ta -20...+55 °C (-4...+131 °F)<br>• II 3D Ex tb IIIC Dc T85°C<br>Ta -20...+55 °C (-4...+131 °F) | • Class I Zone 2 AEx nA IIC Gc T4<br>Ta -20...+55 °C (-4...+131 °F)<br>• Zone 22 AEx tb IIIC Dc T85°C<br>Ta -20...+55 °C (-4...+131 °F) | • Ex nA IIC Gc T4<br>Ta -20...+55 °C (-4...+131 °F)<br>• Ex nA IIC Gc T4A<br>Ta -20...+40 °C (-4...+104 °F)<br>• Ex tb IIIC Dc T85°C<br>Ta -20...+55 °C (-4...+131 °F) | • Class I, Div 2, ABCD T4A<br>Ta -20...+55 °C (-4...+131 °F)<br>• Class II, Div 2, FG T6<br>Ta -20...+55 °C (-4...+131 °F)<br>• Class III, Div 1&2<br>Ta -20...+55 °C (-4...+131 °F) |
| 855XC-BND24RL*<br>855XC-BNA10RL*<br>855XC-BNA20RL* | Combo-radial with LED | • II 3G Ex nA IIC Gc T3 Ta -20...+55 °C (-4...+131 °F)<br>• II 3D Ex tc IIIC Dc T105°C<br>Ta -20...+55 °C (-4...+131 °F)<br>• II 3D Ex tc IIIC Dc T90°C<br>Ta -20...+40 °C (-4...+104 °F) | • Class I Zone 2 AEx nA IIC Gc T3<br>Ta -20...+55 °C (-4...+131 °F)<br>• Zone 22 AEx tc IIIC Dc T105°C<br>Ta -20...+55 °C (-4...+131 °F)<br>• Zone 22 AEx tc IIIC Dc T90°C<br>Ta -20...+40 °C (-4...+104 °F) | • Ex nA IIC Gc T3B<br>Ta -20...+55 °C (-4...+131 °F)<br>• Ex nA IIC Gc T3C<br>Ta -20...+40 °C (-4...+104 °F)<br>• Ex tc IIIC Dc T105°C<br>Ta -20...+55 °C (-4...+131 °F)<br>• Ex tc IIIC Dc T90°C<br>Ta -20...+40 °C (-4...+104 °F) | • Class I, Div 2, ABCD T3C<br>Ta -20...+55 °C (-4...+131 °F)<br>• Class II, Div 2, FG T4A<br>Ta -20...+55 °C (-4...+131 °F)<br>• Class II, Div 2, FG T5<br>Ta -20...+40 °C (-4...+104 °F)<br>• Class III, Div 1&2<br>Ta -20...+55 °C (-4...+131 °F) |

## Table 149 - Standards and Certifications

| Attribute | Bulletin 855X — Hazardous Location Horns, Beacons, and Loudspeakers |
|---|---|
| Standards compliance | • UL 508<br>• UL 1604<br>• CSA C22.2 No. 14<br>• CSA C22.2 No. 213<br>• EN/IEC 60947-1<br>• EN/IEC 60947-5-1 |
| Certifications | • CE Marked<br>• c-UL-us Listed (File No. E305538 for Beacons and File No. E305533 for Horns and Combination units) for Class I, Division 2, Groups A, B, C, and D; Class II, Division 2, Groups F & G, and Class III, Division 1 & 2 |

# Tone Selection Table for 855XH and 855XC Units

| Stage 1 | Frequency Description | Switch | | | | | | Stage 2 | Stage 3 |
|---|---|---|---|---|---|---|---|---|---|
| | | 1 | 2 | 3 | 4 | 5 | 6 | | |
| 1 | 340 Hz, Continuous | 0 | 0 | 0 | 0 | 0 | 0 | Tone 2 | Tone 5 |
| 2 | 800/1000 Hz @ 0.25 s, Alternating | 1 | 0 | 0 | 0 | 0 | 0 | Tone 17 | Tone 5 |
| 3 | 500/1200 Hz @ 0.3 Hz s, Slow Whoop | 0 | 1 | 0 | 0 | 0 | 0 | Tone 2 | Tone 5 |
| 4 | 800/1000 Hz @ 1 Hz, Sweeping | 1 | 1 | 0 | 0 | 0 | 0 | Tone 6 | Tone 5 |
| 5 | 2400 Hz, Continuous | 0 | 0 | 1 | 0 | 0 | 0 | Tone 3 | Tone 20 |
| 6 | 2400/2900 Hz @ 7 Hz, Sweeping | 1 | 0 | 1 | 0 | 0 | 0 | Tone 7 | Tone 5 |
| 7 | 2400/2900 Hz @ 1 Hz, Sweeping | 0 | 1 | 1 | 0 | 0 | 0 | Tone 10 | Tone 5 |
| 8 | 500/1200/500 Hz @ 0.3 Hz, Sweeping | 1 | 1 | 1 | 0 | 0 | 0 | Tone 2 | Tone 5 |
| 9 | 1200/500 Hz @ 1 Hz, - DIN *PFEER P.T.A.P.* | 0 | 0 | 0 | 1 | 0 | 0 | Tone 15 | Tone 2 |
| 10 | 2400/2900 Hz @ 2 Hz, Alternating | 1 | 0 | 0 | 1 | 0 | 0 | Tone 7 | Tone 5 |
| 11 | 1000 Hz @ 1 Hz, Intermittent | 0 | 1 | 0 | 1 | 0 | 0 | Tone 2 | Tone 5 |
| 12 | 800/1000 Hz @ 0.875 Hz, Alternating | 1 | 1 | 0 | 1 | 0 | 0 | Tone 4 | Tone 5 |
| 13 | 2400 Hz @ 1 Hz, Intermittent | 0 | 0 | 1 | 1 | 0 | 0 | Tone 15 | Tone 5 |
| 14 | 800 Hz, 0.25 s ON, 1 s OFF, Intermittent | 1 | 0 | 1 | 1 | 0 | 0 | Tone 4 | Tone 5 |
| 15 | 800 Hz, Continuous | 0 | 1 | 1 | 1 | 0 | 0 | Tone 18 | Tone 5 |
| 16 | 660 Hz, 150 ms ON, 150 ms OFF, Intermittent | 1 | 1 | 1 | 1 | 0 | 0 | Tone 2 | Tone 27 |
| 17 | 544 Hz (100 ms)/440 Hz (400 ms), - NF S 32-001 | 0 | 0 | 0 | 0 | 1 | 0 | Tone 2 | Tone 5 |
| 18 | 660 Hz, 1.8 s ON, 1.8 s OFF, Intermittent | 1 | 0 | 0 | 0 | 1 | 0 | Tone 2 | Tone 5 |
| 19 | 1.4 kHz...1.6 kHz 1 s, 1.6 kHz...1.4 kHz 0.5 s, - NFC48-265 | 0 | 1 | 0 | 0 | 1 | 0 | Tone 2 | Tone 5 |
| 20 | 660 Hz, Continuous | 1 | 1 | 0 | 0 | 1 | 0 | Tone 2 | Tone 5 |
| 21 | 554 Hz/440 Hz @ 1 Hz, Alternating | 0 | 0 | 1 | 0 | 1 | 0 | Tone 2 | Tone 5 |
| 22 | 544 Hz @ 0.875 s, Intermittent | 1 | 0 | 1 | 0 | 1 | 0 | Tone 2 | Tone 5 |
| 23 | 800 Hz @ 2 Hz, Intermittent | 0 | 1 | 1 | 0 | 1 | 0 | Tone 6 | Tone 5 |
| 24 | 800/1000 Hz @ 50 Hz, Sweeping | 1 | 1 | 1 | 0 | 1 | 0 | Tone 29 | Tone 5 |
| 25 | 2400/2900 Hz @ 50 Hz, Sweeping | 0 | 0 | 0 | 1 | 1 | 0 | Tone 29 | Tone 5 |
| 26 | Bell | 1 | 0 | 0 | 1 | 1 | 0 | Tone 2 | Tone 15 |
| 27 | 554 Hz, Continuous | 0 | 1 | 0 | 1 | 1 | 0 | Tone 26 | Tone 5 |
| 28 | 440 Hz, Continuous | 1 | 1 | 0 | 1 | 1 | 0 | Tone 2 | Tone 5 |
| 29 | 800/1000 Hz @ 7 Hz, Sweeping | 0 | 0 | 1 | 1 | 1 | 0 | Tone 7 | Tone 5 |
| 30 | 300 Hz, Continuous | 1 | 0 | 1 | 1 | 1 | 0 | Tone 2 | Tone 5 |
| 31 | 660/1200 Hz @ 1 Hz, Sweeping | 0 | 1 | 1 | 1 | 1 | 0 | Tone 26 | Tone 5 |
| 32 | Two-tone chime | 1 | 1 | 1 | 1 | 1 | 0 | Tone 26 | Tone 15 |
| 33 | 745 Hz @ 1 Hz, Intermittent | 0 | 0 | 0 | 0 | 0 | 1 | Tone 2 | Tone 5 |
| 34 | 1000 Hz & 2000 Hz @ 0.5 s, Alternating - Singapore | 1 | 0 | 0 | 0 | 0 | 1 | Tone 38 | Tone 45 |
| 35 | 420 Hz @ 0.625 s, Australian Alert | 0 | 1 | 0 | 0 | 0 | 1 | Tone 36 | Tone 5 |
| 36 | 500...1200 Hz 3.75 s/0.25 s, Australian Evac. | 1 | 1 | 0 | 0 | 0 | 1 | Tone 35 | Tone 5 |
| 37 | 1000 Hz, Continuous, - *PFEER Toxic Gas* | 0 | 0 | 1 | 0 | 0 | 1 | Tone 9 | Tone 45 |
| 38 | 2000 Hz, Continuous | 1 | 0 | 1 | 0 | 0 | 1 | Tone 34 | Tone 45 |
| 39 | 800 Hz 0.25 s ON, 1 sec OFF, Intermittent | 0 | 1 | 1 | 0 | 0 | 1 | Tone 23 | Tone 17 |
| 40 | 544 Hz (100 ms)/440 Hz (400 ms), - NF S 32-001 | 1 | 1 | 1 | 0 | 0 | 1 | Tone 31 | Tone 27 |
| 41 | Motor Siren - slow rise to 1200 Hz | 0 | 0 | 0 | 1 | 0 | 1 | Tone 2 | Tone 5 |
| 42 | Motor Siren - slow rise to 800 Hz | 1 | 0 | 0 | 1 | 0 | 1 | Tone 2 | Tone 5 |
| 43 | 1200 Hz, Continuous | 0 | 1 | 0 | 1 | 0 | 1 | Tone 2 | Tone 5 |
| 44 | Motor Siren - slow rise to 2400 Hz | 1 | 1 | 0 | 1 | 0 | 1 | Tone 2 | Tone 5 |
| 45 | 1 kHz 1 s ON, 1 s OFF, Intermittent, - *PFEER Gen. Alarm* | 0 | 0 | 1 | 1 | 0 | 1 | Tone 38 | Tone 34 |

# Approximate Dimensions

Dimensions in millimeters (inches). Dimensions are not intended to be used for manufacturing purposes.

**Figure 18 - Bulletin 855XH Horns**

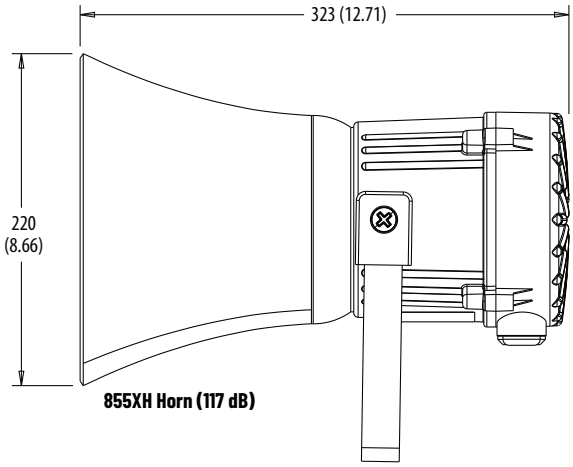


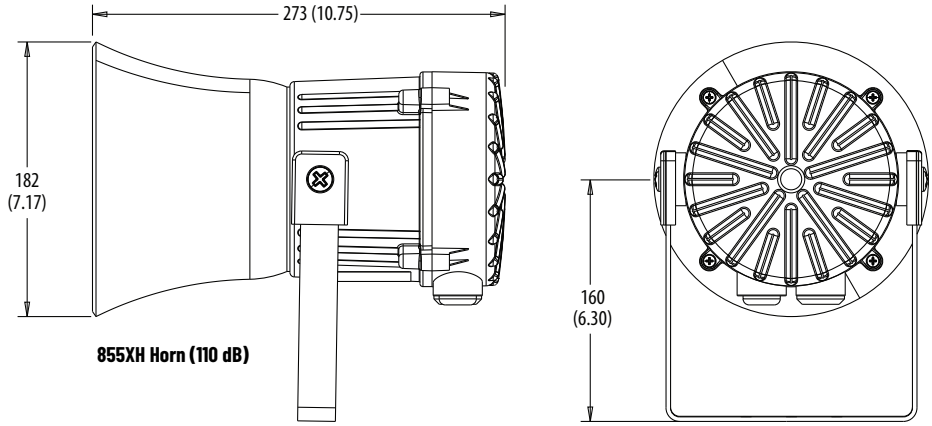


**Figure 19 - Bulletin 855XB Beacons**

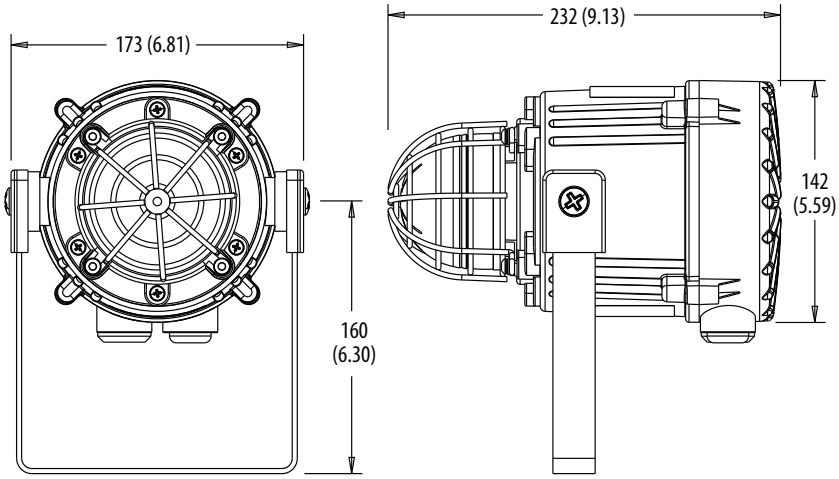

Dimensions in millimeters (inches). Dimensions are not intended to be used for manufacturing purposes.

**Figure 20 - Bulletin 855XC Combo Horn/Beacon**

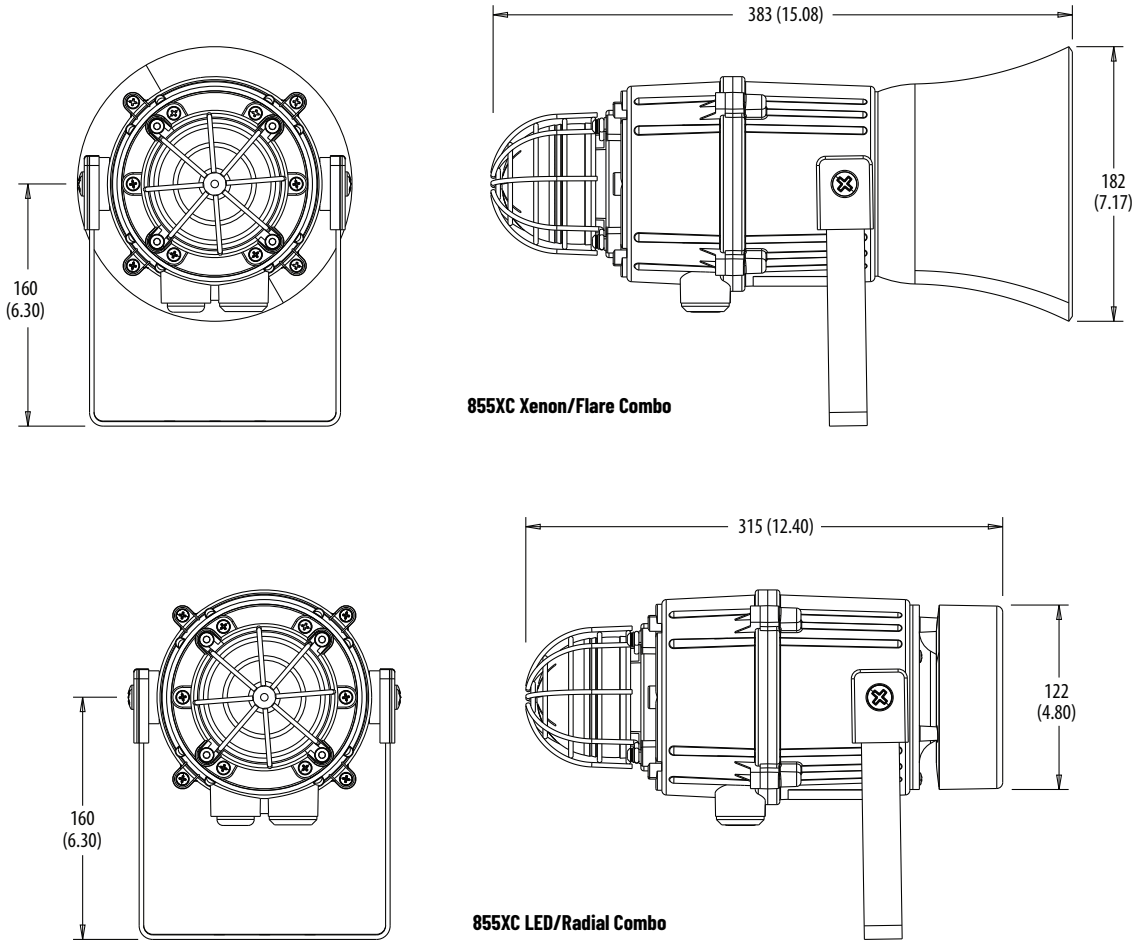

These devices are designed to alert you to critical equipment and system needs on the plant floor. These alarms are available in a wide variety of light and sound functions, sizes, colors, voltages, and mounting options. These devices are also offered pre-assembled to save time.

- Provides low power consumption and long life
- Offers horn only or horn and attached beacon with six lens colors
- Offers 24V DC, 120V AC, and 240V AC voltage options
- Includes marine-grade aluminum enclosure with a compact footprint
- Offers -40...+70 °C (-40...+158 °F) operating temperature for Class 1 Division 2
- NEMA Type 4/4X/13, IP66 certified
- ATEX/IECEx, Zone 2 and Zone 22
- Class 1 Zone 2; Class 1 Zone 22

## Alarm Horn Sounders

| 855XM | - | C | G | M | D24 | D | A | 4 |
|---|---|---|---|---|---|---|---|---|
| | | a | b | c | d | e | f | g |

| a | |
|---|---|
| **Product Type** | |
| **Code** | **Description** |
| H | Horn only |
| C | Horn with attached xenon strobe |

| b | |
|---|---|
| **Housing Color** | |
| **Code** | **Description** |
| G | Gray |

| c | |
|---|---|
| **Conduit Entry** | |
| **Code** | **Description** |
| M | Two M20 x 1.5 mm conduit entries |

| d | |
|---|---|
| **Voltage** | |
| **Code** | **Description** |
| D24 | 20...28V DC (3) |
| D30 | 10...30V DC (4) |
| A10 | 115...125V AC 60 Hz |
| A20 | 215...250V AC 50 Hz |

| e | |
|---|---|
| **Horn Type** | |
| **Code** | **Description** |
| D | 116 dB (A) @ 1 m (3.3 ft), 64 tones, 4 stages |

| f | |
|---|---|
| **Beacon Type (1) (2)** | |
| **Code** | **Description** |
| Blank | No light |
| A | 5 J, strobe |
| B | 10 J, strobe |

| g | |
|---|---|
| **Lens Color (1)(2)** | |
| **Code** | **Description** |
| Blank | No light |
| 4 | Red |
| 5 | Amber |
| 7 | Clear |

(1) Beacon type and lens color must be Blank for Cat. No. 855XM-H.
(2) Beacon type and lens color cannot be Blank for Cat. No. 855XM-C.
(3) Voltage code D24 only valid with beacon code A and B (Table f).
(4) Voltage code D30 not valid with beacon code A and B (Table f).

# Accessories

| Plastic Lens Insert Color | Cat. No. |
|---|---|
| Green | 855XM-ABL3 |
| Red | 855XM-ABL4 |
| Amber | 855XM-ABL5 |
| Blue | 855XM-ABL6 |
| Clear | 855XM-ABL7 |
| Yellow | 855XM-ABL8 |

# Specifications

## Table 150 - Mechanical

| Device | The following are reference guidelines for maximum shock and vibration standards for the 855XM horn. | |
|---|---|---|
| | Shock [G] | Vibration [G] |
| Metal horn | 40 | 3 |
| Metal horn with attached beacon | 30 | 3 |

## Table 151 - Environmental

| Attribute | Device | Value |
|---|---|---|
| Ingress rating | Horn and horn with attached beacon | UL Type 4/4X/13/3R, IP66 |
| Temperature ranges | Operating | Electronic horn: -40...+50°C (-40...+122 °F) (1)<br>Horn with attached beacon: -40...+50 °C (-40...+122 °F) |
| | Storage | Electronic horn and horn with attached beacon: -40...+70 °C (-40...+158 °F) |

(1) -40...+158 °F (-40...+70 °C) for Class 1/Div.2

## Table 152 - Materials

| Part | Material |
|---|---|
| Housing (gray powder coat) | Marine grade aluminum (Al Si12 Cu) |
| Screws | Stainless steel |
| Beacon lens | Polycarbonate over glass |
| Lens cage | Stainless steel |
| Gasket (cover to base) | O-ring Fluorosilicone UL |
| Gasket (screw mounting hole) | Fiber washer |

## Table 153 - Performance Ratings

| Device | Sound Output @ 1 m (3.3 ft) (1) | Volume Control | No. of Tones | Stages |
|---|---|---|---|---|
| Metal horn | 116 dB(A), max | Adjustable -12 dB(A) | 64 | 4 |
| | Light Output (Xenon Strobe Beacon- 5 J) | | Light Output (Xenon Strobe Beacon- 10 J) | |
| Red LED beacon | 14.6 cd eff/120,000 cd peak | | 42.83 cd eff/240,000 cd peak | |
| Amber LED beacon | 45.8 cd eff/350,000 cd peak | | 130.9 cd eff/700,000 cd peak | |
| Clear LED beacon | 80.6 cd eff/500,000 cd peak | | 243.1 cd eff/1,000,000 cd peak | |

(1) SPL data ±3 dB(A). Measured at optimum voltage.

## Table 154 - Operating Voltage and Current Consumption

| Device | Operating Voltage | Nominal Maximum | Inrush | Leakage Immunity |
|---|---|---|---|---|
| **Horns** | | | | |
| 855XM-HGMD30D | 10...30V DC | 160 mA @ 12V DC | 611 mA, 11 ms | >3 mA |
| | | 313 mA @ 24V DC | 1809 mA, 9 ms | |
| | | 225 mA @ 30V DC | 2483 mA, 7 ms @ 30V DC | |
| 855XM-HGMA10D | 115V AC 60 Hz ±10% | 89 mA @ 115V AC 60 Hz | 710 mA, 8 ms | |
| 855XM-HGMA20D | 230V AC 50 Hz ±10% | 52 mA @ 230V AC 60 Hz | 350 mA, 7 ms | |
| **Horns with Beacon** | | | | |
| 855XM-CGMD24DA*x* | 20...28V DC | 513 mA @ 24V DC (5 J) | 1932 mA, 10 ms | >3 mA |
| 855XM-CGMD24DB*x* | 20...28V DC | 876 mA @ 24V DC (10 J) | 2074 mA, 11 ms | |
| 855XM-CGMA10DA*x* | 115...125V AC, 60 Hz | 174 mA @ 115V AC (5 J) | 975 mA, 3 ms | |
| 855XM-CGMA10DB*x* | 115...125V AC, 60 Hz | 320 mA @ 115V AC (10 J) | 1031 mA, 3 ms | |
| 855XM-CGMA20DA*x* | 215...250V AC, 50 Hz | 63 mA @ 230V ACDC (5 J) | 1607 mA, 3 ms | |
| 855XM-CGMA20DB*x* | 215...250V AC, 50 Hz | 100 mA @ 230V AC (10 J) | 1628 mA, 3 ms | |

## Table 155 - Flashing Frequency

| Device | Frequency |
|---|---|
| Horns with strobe | 1 Hz |

## Table 156 - Miscellaneous

| Attribute | Value |
|---|---|
| Cable entry | Two M20x 1.5 mm threaded holes |
| Terminal blocks | 0.5...2.5 $mm^2$ (20...14 AWG) |
| Grounding stud | M5 |

### Table 157 - ATEX/IECEx Certification

| Zone | Group | Temperature Code |
|---|---|---|
| **855XM Hazardous Location Metal Horn** | | |
| Zone 2 | Group IIA (propane)<br>Group IIB (ethylene)<br>Group IIC (hydrogen/acetylene) | T1 (450 °C [842 °F])<br>T2 (300 °C [572 °F])<br>T3 (200 °C [392 °F])<br>T4 (135 °C [275 °F]) |
| Zone 22 (1) | Group IIIA (combustible flyings)<br>Group IIIB (non-conductive dust)<br>Group IIIC (conductive dust) | — |
| **855XM-C Hazardous Location Metal Horn with Strobe** | | |
| Zone 2 | Group IIA (propane)<br>Group IIB (ethylene)<br>Group IIC (hydrogen/acetylene) | T1 (450 °C [842 °F])<br>T2 (300 °C [572 °F]) |
| Zone 22 (2) | Group IIIA (combustible flyings)<br>Group IIIB (non-conductive dust)<br>Group IIIC (conductive dust) | — |

(1) Maximum surface temperature for dust applications is 90 °C (194 °F).
(2) Maximum surface temperature for dust applications is 90 °C (194 °F) for Cat. No. 855XM-CGMxxxDA* and 110 °C (230 °F) for Cat. No. 855XM-CGMxxxDB*.

### Table 158 - Class/Zone Ratings — US

| Device | Rating |
|---|---|
| Horn | • Class I, Zone 2 AEx nA IIC T4 Gc (Ta -40...+50 °C [-40...+122 °F])<br>• Class I, Zone 22 AEx tc IIIC T90 °C Dc (Ta -40...+50 °C [-40...+122 °F]) |
| Horn with 5 J strobe | • Class I, Zone 2 AEx nA IIC T2 Gc (Ta -40...+50 °C [-40...+122 °F])<br>• Class I, Zone 22 AEx tc IIIC 120 °C Dc (Ta -40...+50 °C [-40...+122 °F]) |
| Horn with 10 J strobe | • Class I, Zone 2 AEx nA IIC T1 Gc (Ta -40...+50 °C [-40...+122 °F])<br>• Class I, Zone 2 AEx nA IIC T2 Gc for (Ta -40...+40 °C [-40...+104 °F])<br>• Class I, Zone 22 AEx tc IIIC 120 °C Dc (Ta -40...+50 °C [-40...+122 °F]) |

All horns (with and without strobe) comply with the following:

- ANSI/UL 60079-0-2013
- ANSI/UL 60079-15-2013
- ISA60079-31-2013

### Table 159 - Class/Zone Ratings — Canada

| Device | Rating |
|---|---|
| Horn | • Ex nA IIC T4 Gc X (Ta -40...+50 °C [-40...+122 °F])<br>• Ex tc IIIC T90 °C Dc (Ta -40...+50 °C [-40...+122 °F])<br>• Class II Div 2 FG T5 (Ta -40...+50 °C [-40...+122 °F]) |
| Horn with 5 J strobe | • Ex nA IIC T2B Gc X (Ta -40...+50 °C [-40...+122 °F])<br>• Ex nA IIC T2C Gc X (Ta -40...+45 °C [-40...+113 °F])<br>• Ex tc IIIC T120 °C Dc (Ta -40...+50 °C [-40...+122 °F])<br>• Class II, Div 2 FG T4A (Ta -40...+50 °C [-40...+122 °F]) |
| Horn with 10 J strobe | • Ex nA IIC T1 Gc X (Ta -40...+50 °C [-40...+122 °F])<br>• Ex nA IIC T2 Gc X (Ta -40...+40 °C [-40...+104 °F])<br>• Ex tc IIIC T120 °C Dc (Ta -40...+50 °C [-40...+122 °F])<br>• Class II, Div 2 FG T4A (Ta -40...+50 °C [-40...+122 °F]) |

All horns (with and without strobe) comply with the following:

- CAN/CSA C22.2 No. 60079-0:11
- CAN/CSA C22.2 No. 60079-15:12
- CAN/CSA C22.2 No. 60079-31:12

### Table 160 - Class/Division Ratings — US and Canada

| Device | Rating |
|---|---|
| Horn | • Class I Div 2, ABCD T3C (Ta -40...+70 °C [-40...+158 °F])<br>• Class I Div 2, ABCD T4 (Ta -40...+65 °C [-40...+149 °F])<br>• Class I Div 2, ABCD T4A (Ta -40...+50 °C [-40...+122 °F])<br>• Class II Div 2, FG T5 (Ta -40...+50 °C [-40...+122 °F])<br>• Class II Div 2, FG T6 (Ta -40...+45 °C [-40...+113 °F])<br>• Class III Div 1 & 2 (Ta -40...+50 °C [-40...+122 °F]) |
| Horn with 5 J strobe | • Class I Div 2, ABCD T2B (Ta -40...+70 °C [-40...+158 °F])<br>• Class I Div 2, ABCD T2C (Ta -40...+55 °C [-40...+131 °F])<br>• Class I Div 2, ABCD T2D (Ta -40...+40 °C [-40...+104 °F])<br>• Class II Div 2, FG T5 (Ta -40...+50 °C [-40...+122 °F])<br>• Class III Div 1&2 (Ta -40...+50 °C [-40...+122 °F]) |
| Horn with 10 J strobe | • Class I Div 2, ABCD T1 (Ta -40...+70 °C [-40...+158 °F])<br>• Class I Div 2, ABCD T2 (Ta -40...+50 °C [-40...+122 °F])<br>• Class II Div 2, FG T4A (Ta -40...+50 °C [-40...+122 °F])<br>• Class II Div 2, FG T5 (Ta -40...+104 °F [-40...+40 °C])<br>• Class III Div 1&2 (Ta -40...+50 °C [-40...+122 °F]) |

All horns (with and without strobe) comply with the following:

- ANSI/ISA 12.12.01 – 2013
- CSA C22.2 No. 213-M1987
- CSA C22.2 No. 157-92:2006

### Table 161 - Standards and Certifications

| Attribute | Bulletin 855XM — Hazardous Location Metal Horns |
|---|---|
| Standards compliance | • c-UL-us Listed UL464/UL 1608 File No. E305533<br>• CSA C22.2 No. 213-M1987<br>• CSA C22.2 No. 157-92: 2006<br>• CE — European Explosive Atmosphere Directive 94/9/EC and European EMC Directive 2004/108/EC<br>• EN60079-0:2012/IEC60079-0: ed. 6.0 (2011-06)<br>• EN60079-15:2010/IEC60079-15: ed. 4.0 (2010-01)<br>• EN60079-31:2009/IEC60079-31:2009 ed. 1.0 (corr. 1 2009) |
| Certifications | • CE Marked<br>• UL Listed for:<br>– Class I, Division 2, Groups A, B, C, and D<br>– Class II, Division 2, Groups F and G<br>– Class III, Division 1 and 2 (see Temperature Codes in Table 157 on page 116)<br>• ATEX/IECEx: Zone 2 Groups IIA, B, C and Zone 22 Groups IIIA, B, and C<br>• Ex Rating (Horn): II 3G Ex nA IIC T4 Gc and II 3D Ex tc IIIC T90 °C Dc (Ta -40...+50 °C [-40...+122 °F])<br>• Ex Rating (Horn with 5 J Strobe): II 3G Ex nA IIC T2 Gc and II 3D Ex tc IIIC T90 °C Dc (Ta -40...+50 °C [-40...+122 °F])<br>• Ex Rating (Horn with 10 J Strobe): II 3G Ex nA IIC T1 Gc and II 3D Ex tc IIIC T110 °C Dc (Ta -40...+50 °C [-40...+122 °F]); [II 3G Ex nA IIC T2 Gc for Ta -40...+40 °C (-40...+104 °F)] |

# Tone Selection Table for 855XM

**Tone Selection –** To select the required first stage tone, set the tone switches 1...6 to the tone setting shown in the following table. The table also shows which 2nd, 3rd, and 4th stage tones are available for use with the selected first stage tone if more that one tone output is required.

| Stage 1 Tone No. | Tone Description | Tone Visual | Switch | | | | | | Stage 2 Alarm (S2) | Stage 3 Alarm (S3) | Stage 4 Alarm (S2+S3) |
|---|---|---|---|---|---|---|---|---|---|---|---|
| | | | 1 | 2 | 3 | 4 | 5 | 6 | | | |
| 1 | 1000 Hz PFEER toxic gas | 1000 Hz | 0 | 0 | 0 | 0 | 0 | 0 | 3 | 2 | 44 |
| 2 | 1200/500 @ 1 Hz DIN / PFEER P.T.A.P. | 1200 Hz 500 Hz 1 s 1 s | 1 | 0 | 0 | 0 | 0 | 0 | 1 | 3 | 44 |
| 3 | 1000 @ 0.5 Hz(1 s on/1 s off) PFEER gen. alarm | 1000 Hz 1 s 1 s | 0 | 1 | 0 | 0 | 0 | 0 | 1 | 2 | 44 |
| 4 | 1.4...1.6 kHz 1 s, 1.6...1.4 kHz 0.5 s NF C 48-265 | 1600 Hz 1400 Hz 1 s 1 s | 1 | 1 | 0 | 0 | 0 | 0 | 44 | 24 | 1 |
| 5 | 544 (100 ms)/440 (400 ms) NF S 32-001 | 554 Hz 440 Hz 0.1 s 0.4 s | 0 | 0 | 1 | 0 | 0 | 0 | 52 | 19 | 1 |
| 6 | 1500/500 - (0.5 s on/0.5 s off) x3 + 1 s gap AS4428 | 1500 Hz 500 Hz 0.5 s 0.5 s 0.5 s 0.5 s 0.5 s 1.5 s | 1 | 0 | 1 | 0 | 0 | 0 | 7 | 44 | 1 |
| 7 | 500...1500 Hz sweeping 2 s on/1 s off AS4428 | 1500 Hz 500 Hz 2 s 1 s | 0 | 1 | 1 | 0 | 0 | 0 | 6 | 44 | 1 |
| 8 | 500/1200 Hz @ 0.26 Hz(3.3 s on/0.5 s off) Netherlands - NEN 2575 | 1200 Hz 500 Hz 3.3 s 0.5 s | 1 | 1 | 1 | 0 | 0 | 0 | 44 | 24 | 35 |
| 9 | 1000 (1 s on/1 s off) x7 + (7 s on/1 s off) IMO Code 1a | 1000 Hz 1 s 1 s 1 s 1 s 1 s 1 s 1 s 1 s 1 s 1 s 1 s 1 s 1 s 1 s 7 s 7 s | 0 | 0 | 0 | 1 | 0 | 0 | 18 | 34 | 1 |
| 10 | | | 1 | 0 | 0 | 1 | 0 | 0 | 21 | 34 | 1 |
| 11 | 420 (0.5 s on/0.5 s off) x3 + 1 s gap ISO 8201 temporal pattern | 420 Hz 0.5 s 0.5 s 0.5 s 0.5 s 0.5 s 1.5 s | 0 | 1 | 0 | 1 | 0 | 0 | 44 | 1 | 8 |
| 12 | 1000 (0.5 s on/0.5 s off) x3 + 1 s gap ISO 8201 temporal pattern | 1000 Hz 0.5 s 0.5 s 0.5 s 0.5 s 0.5 s 1.5 s | 1 | 1 | 0 | 1 | 0 | 0 | 44 | 1 | 8 |
| 13 | 422/775 - (0.85 s on/0.5 s off) x3 + 1 s gap NFPA - temporal | 775 Hz 422Hz 0.85 s 0.5 s 0.85 s 0.5 s 0.85 s 1.5 s | 0 | 0 | 1 | 1 | 0 | 0 | 44 | 1 | 8 |
| 14 | 1000/2000 @ 1 Hz Singapore | 2000 Hz 1000 Hz 1 s | 1 | 0 | 1 | 1 | 0 | 0 | 23 | 3 | 35 |
| 15 | 300 continuous | 300 Hz | 0 | 1 | 1 | 1 | 0 | 0 | 44 | 24 | 35 |
| 16 | 440 continuous | 440 Hz | 1 | 1 | 1 | 1 | 0 | 0 | 44 | 24 | 35 |
| 17 | 470 continuous | 470 Hz | 0 | 0 | 0 | 0 | 1 | 0 | 44 | 24 | 35 |
| 18 | 500 continuous IMO Code 2 (low) | 500 Hz | 1 | 0 | 0 | 0 | 1 | 0 | 44 | 24 | 35 |
| 19 | 554 continuous | 554 Hz | 0 | 1 | 0 | 0 | 1 | 0 | 64 | 24 | 35 |
| 20 | 660 continuous | 660 Hz | 1 | 1 | 0 | 0 | 1 | 0 | 44 | 24 | 35 |
| 21 | 800 IMO Code 2 (high) | 800 Hz | 0 | 0 | 1 | 0 | 1 | 0 | 44 | 24 | 35 |
| 22 | 1200 continuous | 1200 Hz | 1 | 0 | 1 | 0 | 1 | 0 | 44 | 24 | 35 |
| 23 | 2000 continuous | 2000 Hz | 0 | 1 | 1 | 0 | 1 | 0 | 15 | 3 | 35 |
| 24 | 2400 continuous | 2400 Hz | 1 | 1 | 1 | 0 | 1 | 0 | 48 | 20 | 35 |
| 25 | 440 @ 0.83 Hz (50 cycles/min) intermittent | 440 Hz 0.6 s 0.6 s | 0 | 0 | 0 | 1 | 1 | 0 | 1 | 44 | 8 |
| 26 | 470 @ 0.9 Hz - 1.1 s intermittent | 470 Hz 0.55 s 0.55 s | 1 | 0 | 0 | 1 | 1 | 0 | 1 | 44 | 8 |
| 27 | 470 @ 5 Hz - (5 cycles/s) intermittent | 470 Hz 0.1 s 0.1 s | 0 | 1 | 0 | 1 | 1 | 0 | 1 | 44 | 8 |
| 28 | 544 @ 1.14 Hz - 0.875 s intermittent | 470 Hz 0.43 s 0.44 s | 1 | 1 | 0 | 1 | 1 | 0 | 44 | 24 | 8 |
| 29 | 655 @ 0.875 Hz intermittent | 655 Hz 0.57 s 0.57 s | 0 | 0 | 1 | 1 | 1 | 0 | 1 | 44 | 8 |
| 30 | 660 @ 0.28 Hz - 1.8 s on/1.8 s off intermittent | 660 Hz 1.8 s 1.8 s | 1 | 0 | 1 | 1 | 1 | 0 | 44 | 24 | 8 |
| 31 | 660 @ 3.34 Hz - 150 ms on/150 ms off intermittent | 660 Hz 0.15 s 0.15 s | 0 | 1 | 1 | 1 | 1 | 0 | 30 | 24 | 8 |
| 32 | 745 @ 1 Hz intermittent | 745 Hz 0.5 s 0.5 s | 1 | 1 | 1 | 1 | 1 | 0 | 44 | 24 | 8 |
| 33 | 800 - 0.25 s on/1 s off intermittent | 800 Hz 0.25 s 1 s | 0 | 0 | 0 | 0 | 0 | 1 | 53 | 24 | 8 |

**Tone Selection –** To select the required first stage tone, set the tone switches 1...6 to the tone setting shown in the following table. The table also shows which 2nd, 3rd, and 4th stage tones are available for use with the selected first stage tone if more that one tone output is required.

| Stage 1 Tone No. | Tone Description | Tone Visual | Switch | | | | | | Stage 2 | Stage 3 | Stage 3 |
|---|---|---|---|---|---|---|---|---|---|---|---|
| | | | 1 | 2 | 3 | 4 | 5 | 6 | | | |
| 34 | 800 @ 2 Hz IMO Code 3.a (high) intermittent | 800 Hz 0.25 s 0.25 s | 1 | 0 | 0 | 0 | 0 | 1 | 56 | 24 | 8 |
| 35 | 1000 @ 1 Hz intermittent | 1000 Hz 0.5 s 0.5 s | 0 | 1 | 0 | 0 | 0 | 1 | 44 | 24 | 8 |
| 36 | 2400 @ 1 Hz intermittent | 2400 Hz 0.5 s 0.5 s | 1 | 1 | 0 | 0 | 0 | 1 | 21 | 24 | 8 |
| 37 | 2900 @ 5 Hz intermittent | 2900 Hz 0.1 s 0.1 s | 0 | 0 | 1 | 0 | 0 | 1 | 53 | 24 | 8 |
| 38 | 363/518 @ 1 Hz alternating | 518 Hz 363 Hz 0.5 s 0.5 s | 1 | 0 | 1 | 0 | 0 | 1 | 1 | 8 | 19 |
| 39 | 450/500 @ 2 Hz alternating | 500 Hz 450 Hz 0.25 s 0.25 s | 0 | 1 | 1 | 0 | 0 | 1 | 1 | 8 | 19 |
| 40 | 554/440 @ 1 Hz alternating | 554 Hz 440 Hz 0.5 s 0.5 s | 1 | 1 | 1 | 0 | 0 | 1 | 44 | 24 | 19 |
| 41 | 554/440 @ 0.625 Hz alternating | 554 Hz 440 Hz 0.8 s 0.8 s | 0 | 0 | 0 | 1 | 0 | 1 | 1 | 8 | 19 |
| 42 | 561/760 @ 0.83 Hz (50 cycles/min) alternating | 760 Hz 561 Hz 0.6 s 0.6 s | 1 | 0 | 0 | 1 | 0 | 1 | 1 | 8 | 19 |
| 43 | 780/600 @ 0.96 Hz alternating | 780 Hz 600 Hz 0.52 s 0.52 s | 0 | 1 | 0 | 1 | 0 | 1 | 1 | 8 | 19 |
| 44 | 800/1000 @ 2 Hz alternating | 1000 Hz 800 Hz 0.25 s 0.25 s | 1 | 1 | 0 | 1 | 0 | 1 | 5 | 24 | 19 |
| 45 | 970/800 @ 2 Hz alternating | 970 Hz 800 Hz 0.25 s 0.25 s | 0 | 0 | 1 | 1 | 0 | 1 | 1 | 8 | 19 |
| 46 | 800/1000 @ 0.875 Hz alternating | 1000 Hz 800 Hz 0.57 s 0.57 s | 1 | 0 | 1 | 1 | 0 | 1 | 53 | 24 | 19 |
| 47 | 2400/2900 @ 2 Hz alternating | 2900 Hz 2400 Hz 0.25 s 0.25 s | 0 | 1 | 1 | 1 | 0 | 1 | 57 | 24 | 19 |
| 48 | 500/1200 @ 0.3 Hz sweeping | 1200 Hz 500 Hz 3.34 s | 1 | 1 | 1 | 1 | 0 | 1 | 44 | 24 | 12 |
| 49 | 560/1055 @ 0.18 Hz sweeping | 1055 Hz 560 Hz 5.47 s | 0 | 0 | 0 | 0 | 1 | 1 | 44 | 24 | 12 |
| 50 | 560/1055 @ 3.3 Hz sweeping | 1055 Hz 560 Hz 0.3 s | 1 | 0 | 0 | 0 | 1 | 1 | 44 | 24 | 12 |
| 51 | 600/1250 @ 0.125 Hz sweeping | 1250 Hz 600 Hz 8 s | 0 | 1 | 0 | 0 | 1 | 1 | 44 | 24 | 12 |
| 52 | 660/1200 @ 1 Hz sweeping | 1200 Hz 660 Hz 1 s | 1 | 1 | 0 | 0 | 1 | 1 | 64 | 24 | 12 |
| 53 | 800/1000 @ 1 Hz sweeping | 1000 Hz 800 Hz 1 s | 0 | 0 | 1 | 0 | 1 | 1 | 56 | 24 | 12 |
| 54 | 800/1000 @ 7 Hz sweeping | 1000 Hz 800 Hz 0.14 s | 1 | 0 | 1 | 0 | 1 | 1 | 57 | 24 | 12 |
| 55 | 800/1000 @ 50 Hz sweeping | 1000 Hz 800 Hz 0.02 s | 0 | 1 | 1 | 0 | 1 | 1 | 54 | 24 | 12 |
| 56 | 2400/2900 @ 7 Hz sweeping | 2900 Hz 2400 Hz 0.14 s | 1 | 1 | 1 | 0 | 1 | 1 | 57 | 24 | 12 |
| 57 | 2400/2900 @ 1 Hz sweeping | 2900 Hz 2400 Hz 1 s | 0 | 0 | 0 | 1 | 1 | 1 | 47 | 24 | 12 |
| 58 | 2400/2900 @ 50 Hz sweeping | 2900 Hz 2400 Hz 0.02 s | 1 | 0 | 0 | 1 | 1 | 1 | 54 | 24 | 12 |
| 59 | 2500/3000 @ 2 Hz sweeping | 3000 Hz 2500 Hz 0.5 s | 0 | 1 | 0 | 1 | 1 | 1 | 44 | 24 | 12 |
| 60 | 2500/3000 @ 7.7 Hz sweeping | 3000 Hz 2500 Hz 0.13 s | 1 | 1 | 0 | 1 | 1 | 1 | 44 | 24 | 12 |
| 61 | 800 motor siren | 800 Hz 1.6 s | 0 | 0 | 1 | 1 | 1 | 1 | 44 | 24 | 12 |
| 62 | 1200 motor siren | 1200 Hz 2 s | 1 | 0 | 1 | 1 | 1 | 1 | 44 | 24 | 12 |
| 63 | 2400 motor siren | 2400 Hz 1.7 s | 0 | 1 | 1 | 1 | 1 | 1 | 44 | 24 | 12 |
| 64 | Simulated bell | 1450 Hz 0.25 s 0.69 s | 1 | 1 | 1 | 1 | 1 | 1 | 44 | 21 | 12 |

# Approximate Dimensions

Dimensions in millimeters (inches). Dimensions are not intended to be used for manufacturing purposes.

855XM Hazardous Location Metal Horn

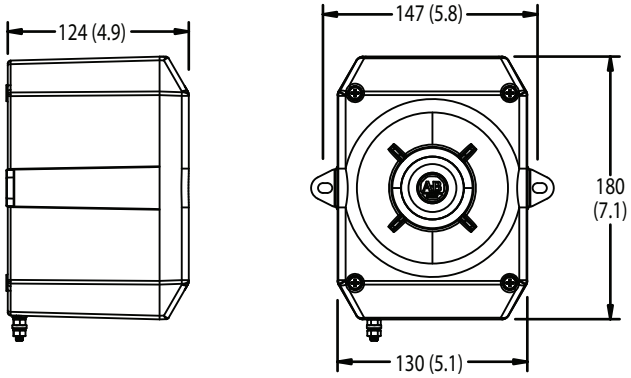


855XM-C Hazardous Location Metal Horn with Xenon Strobe

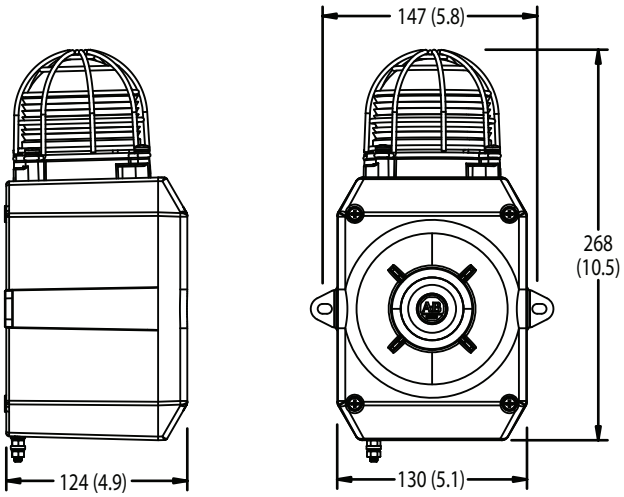

# Additional Resources

These documents contain additional information concerning related products from Rockwell Automation.

| Resource | Description |
|---|---|
| 855 Metal Horns Selection Guide, publication 855-SG002 | Provides product selection for 855XM and 855HM metal horns. |
| Bulletin 855 Signaling Solutions Brochure, publication 855-BR001 | Provides information on the complete portfolio of signaling solutions for optimized monitoring. |
| Signaling Device Installation Instructions, Literature Library | Provides installation instructions for various signaling devices. |
| Industrial Automation Wiring and Grounding Guidelines, publication 1770-4.1 | Provides general guidelines for installing a Rockwell Automation industrial system. |
| Product Certifications website, rok.auto/certifications | Provides declarations of conformity, certificates, and other certification details. |
| EtherNet/IP Network Devices User Manual, ENET-UM006 | Describes how to configure and use EtherNet/IP devices to communicate on the EtherNet/IP network. |
| Ethernet Reference Manual, ENET-RM002 | Describes basic Ethernet concepts, infrastructure components, and infrastructure features. |
| System Security Design Guidelines Reference Manual, SECURE-RM001 | Provides guidance on how to conduct security assessments, implement Rockwell Automation products in a secure system, harden the control system, manage user access, and dispose of equipment. |
| Industrial Components Preventive Maintenance, Enclosures, and Contact Ratings Specifications, publication IC-TD002 | Provides a quick reference tool for Allen-Bradley industrial automation controls and assemblies. |
| Safety Guidelines for the Application, Installation, and Maintenance of Solid-state Control, publication SGI-1.1 | Designed to harmonize with NEMA Standards Publication No. ICS 1.1-1987 and provides general guidelines for the application, installation, and maintenance of solid-state control in the form of individual devices or packaged assemblies incorporating solid-state components. |
| Industrial Automation Wiring and Grounding Guidelines, publication 1770-4.1 | Provides general guidelines for installing a Rockwell Automation industrial system. |
| Product Certifications website, rok.auto/certifications. | Provides declarations of conformity, certificates, and other certification details. |

You can view or download publications at rok.auto/literature.

## Rockwell Automation Support

Use these resources to access support information.

| | | |
|---|---|---|
| **Technical Support Center** | Find help with how-to videos, FAQs, chat, user forums, and product notification updates. | rok.auto/support |
| **Knowledgebase** | Access Knowledgebase articles. | rok.auto/knowledgebase |
| **Local Technical Support Phone Numbers** | Locate the telephone number for your country. | rok.auto/phonesupport |
| **Literature Library** | Find installation instructions, manuals, brochures, and technical data publications. | rok.auto/literature |
| **Product Compatibility and Download Center (PCDC)** | Download firmware, associated files (such as AOP, EDS, and DTM), and access product release notes. | rok.auto/pcdc |

## Documentation Feedback

Your comments help us serve your documentation needs better. If you have any suggestions on how to improve our content, complete the form at rok.auto/docfeedback.

Allen-Bradley, Control Tower, expanding human possibility, On-Machine, and Rockwell Automation are trademarks of Rockwell Automation, Inc.
Trademarks not belonging to Rockwell Automation are property of their respective companies.

Rockwell Automation maintains current product environmental compliance information on its website at rok.auto/pec.

Rockwell Otomasyon Ticaret A.Ş. Kar Plaza İş Merkezi E Blok Kat:6 34752, İçerenköy, İstanbul, Tel: +90 (216) 5698400 EEE Yönetmeliğine Uygundur

Connect with us.

rockwellautomation.com — expanding **human possibility**™

AMERICAS: Rockwell Automation, 1201 South Second Street, Milwaukee, WI 53204-2496 USA, Tel: (1) 414.382.2000, Fax: (1) 414.382.4444
EUROPE/MIDDLE EAST/AFRICA: Rockwell Automation NV, Pegasus Park, De Kleetlaan 12a, 1831 Diegem, Belgium, Tel: (32) 2 663 0600, Fax: (32) 2 663 0640
ASIA PACIFIC: Rockwell Automation, Level 14, Core F, Cyberport 3, 100 Cyberport Road, Hong Kong, Tel: (852) 2887 4788, Fax: (852) 2508 1846

Publication 855-TD001K-EN-P - March 2021
Supersedes Publication 855-TD001J-EN-P - November 2020

Copyright © 2021 Rockwell Automation, Inc. All rights reserved. Printed in the U.S.A.