Selection Guide

Allen-Bradley

ArmorStart® LT Distributed Motor Controllers

Bulletins 290, 291, 294

DeviceNet

EtherNet/IP

Allen-Bradley • Rockwell Software

Rockwell Automation

Bulletin	290/291	294
Network Communications:		
EtherNet/IP	✓	✓
DeviceNet	✓	✓
Horsepower Range:		
0.5…5 Hp (0.37…3.3 kW)	✓	—
0.5…2 Hp (0.37…1.5 kW)	—	✓
Starting Method:		
Full-Voltage and Reversing	✓	—
VFD (V/Hz)	—	✓
Environmental Rating:		
IP66/UL Type 4/12	✓	✓
Control Voltage:		
24V DC	✓	✓
Internal Power Supply (sourced from 3-phase)	✓	✓
Operational Voltage Ratings:		
200…480V AC	✓	—
380…480V AC	—	✓
Rated for Group Motor Installations	✓	✓
Local logic using DeviceLogix™	✓	✓
Peer-to-Peer (ZIP)	✓ DeviceNet version only	✓ DeviceNet version only
I/O Capability:		
Six Self-Configurable Points	✓	✓
LED Status Indication	✓	✓
Gland Plate Entry:		
Conduit Entrance	✓	✓
ArmorConnect® Power and Control Media (option)	✓	✓
Quick Disconnects: I/O and Communications	✓	✓
EMI Filter	—	✓
Factory Installed Options:		
Manual-Auto-Off HOA Keypad	✓	✓
Source Brake Contactor	—	✓
Internal 24V DC Power Supply	✓	✓
Optional Motor Cables	✓	✓
ArmorConnect Gland	✓	✓
Standards Compliance & Certifications	LISTED A191 IND. CONT. EQ. A000474 N223 EN 60947-1 EN 60947-4-1 Pollution Degree 3	LISTED 14ZN IND. CONT. EQ. A000474 N223 EN 60947-1 EN 61800-5-1 Pollution Degree 3
Product Selection	**Page 8**	**Page 19**

Product Line Description

ArmorStart LT, Bulletin 290/291/294 is an integrated, pre-engineered distributed motor control solution. It provides excellent performance at a great value to meet today's needs in size, simplicity, and performance. It also provides material handling equipment suppliers with a compact footprint which is essential when space is at a premium, without sacrificing performance or functionality. The user will experience premier integration with ArmorStart LT and the Rockwell Automation family of Logix PLCs.

ArmorStart LT is available with Full Voltage, Full Voltage Reversing, or Variable Speed motor control performance. It is equipped with a UL Listed at-motor disconnect that supports a lockout tagout (LOTO) provision. ArmorStart LT is listed suitable for group motor installations per UL and can be applied with either branch circuit breaker protection or fuse protection. It provides a robust IP66/UL Type 4/12 enclosure suitable for water washdown environments in a single box construction that will minimize inventory needs. All external connections are made from the bottom of the unit. The power, control, and motor connections are made via a gland plate, as standard.

ArmorStart LT provides several standard features. It can be ordered with EtherNet/IP or DeviceNet network support. Each unit will be equipped with quick disconnect receptacles for I/O and the network. Users will experience tools such as a Logix Add-On Profile (AOP), setup wizards, auto-generated tags, and embedded webserver support, that allows access to status and diagnostics from anywhere in the world. Lastly, the electronic control module (ECM) includes externally accessible node address switches, configurable I/O, and comprehensive status and diagnostics LEDs.

The ArmorStart LT can also be configured with several options that can further reduce installation and commissioning time. Quick disconnects are available for power, control, and motor connections, using ArmorConnect cable solutions. A Hand-Off-Auto keypad for local control is an available option. The optional internal power supply (IPS), eliminates the need to run separate control power. ArmorStart LT Bulletin 294 can be configured with an electromechanical brake connection for the motor brake.

Features — Standard Across Product Family

UL Listed "Suitable for Group Motor Applications" - Where NFPA 70 (NEC) or 79 are required installation standards, this Listing allows two or more motors to be connected to the same branch circuit without individual motor branch short circuit or ground fault protection.

At-motor disconnect switch - ArmorStart LT offers a local ON/Off motor disconnecting means with lockout-tagout provision. Industrial standards require a local at-motor disconnect to be within eye sight of the motor for maintenance or other shutdown reasons.

User configureable I/O - ArmorStart LT offers six user configurable I/O points to be used with sensors and actuators. By default all six points are configured as sinking 24V DC inputs. The user has the option to select any point as a sourcing 24V DC output.

RSLogix™ 5000 Add-On Profile (AOP) - ArmorStart LT offers for Allen-Bradley ControlLogix® or CompactLogix™ PLCs a downloadable Add-on Profile (AOP). The AOP simplifies setup and commissioning via predefined tags and a setup wizard. The AOP allows copy and paste functionality for quick setup and configuration of multiple ArmorStart LTs.

Local logic via DeviceLogix - ArmorStart LT offers local programmable logic via DeviceLogix. DeviceLogix is a stand-alone program that resides within the ArmorStart LT. It is programmed locally using the AOP and implements operations such as, AND, OR, NOT, Timers, Counters, Latches, and Analog.

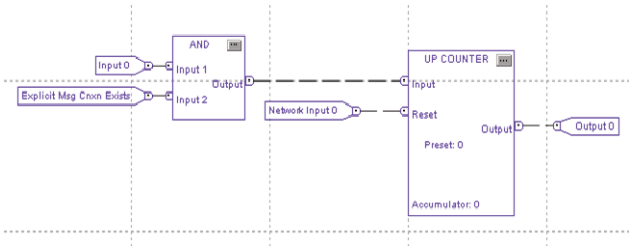

Quick disconnect for I/O and Network - ArmorStart LT offers quick disconnect connectors for I/O and communications.

DeviceNet and EtherNet/IP node address - ArmorStart LT offers externally accessible address switches for node address configuration. The address can also be set statically or dynamically.

EMI filter - ArmorStart LT Bulletin 294 provides an internal EMI filter and is CE compliant. For CE compliant installations refer to the recommended EMI/RFI cord grip accessory. For availability of the quick disconnect shielded motor cable contact your local Rockwell Automation sales office or Allen-Bradley distributor.

Local status and diagnostics - ArmorStart LT offers comprehensive status and diagnostics for I/O, Network, and device health via 12 LEDs found on the electronic control module (ECM). If a fault occurs, a local fault reset button allows the user to quickly get the process started after corrective action is taken.

Features (Continued)

Peer-to-Peer (ZIP) - ArmorStart LT for DeviceNet application provides zone control capabilities ideal for small, locally controlled conveyor sections. The Zone Interlocking Parameters (ZIP) allow one ArmorStart LT to consume data directly from up to four other DeviceNet nodes that support ZIP without going through the network scanner. These direct communications between conveyor zones are beneficial in merge, diverter, and accumulation conveyor applications.

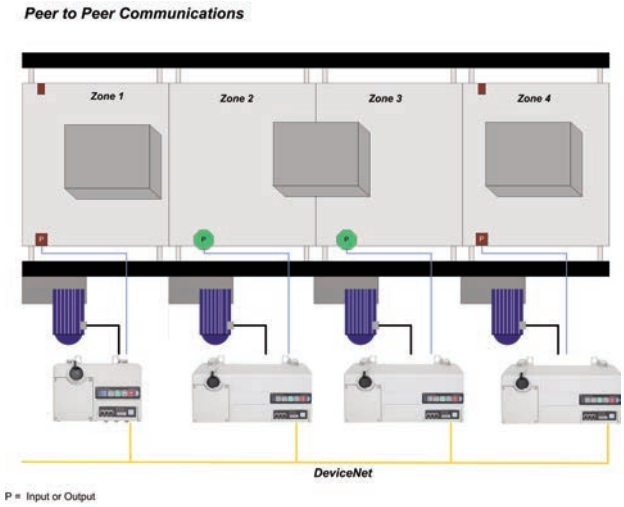

Gland plate entrance - ArmorStart LT offers conduit holes or quick-disconnect receptacles for connecting three-phase, control power, and motor.

Network Options

Native EtherNet/IP - ArmorStart LT supports native EtherNet/IP. EtherNet/IP allows complete integration of control and information. EtherNet/IP allows users to integrate I/O control, device configuration, and data collection across multiple networks enabling internet connectivity and information, anytime and anywhere.

Native DeviceNet - ArmorStart LT supports native DeviceNet. DeviceNet is a device-level network for industrial automation. It offers robust and efficient data handling.

Embedded dual port switch - ArmorStart LT EtherNet/IP version includes an embedded dual port 10/100mb/s ethernet switch that supports Linear, Star, or Device Level Ring (DLR) topology.

Device Level Ring (DLR) - ArmorStart LT EtherNet/IP version offers DLR support with beacon frame performance. DLR provides a single-fault tolerant network solution that is self healing.

IEEE 1588 transparent clock - ArmorStart LT EtherNet/IP version supports the IEEE 1588 transparent clock.

Factory-Installed Options

Internal Power Supply (IPS) - ArmorStart LT offers the user an optional 24V DC IPS. The IPS provides all control and I/O power and is sourced from the incoming 3-phase power. The at-motor disconnect will remove motor and output power when in the OFF position.

Hand/Off/Auto (HOA) keypad - ArmorStart LT offers an optional local Hand- Off-Auto keypad. This key pads allows local start/ stop motor control regardless of PLC status.

Bulletin 290

Bulletin 291

Bulletin 294

Source brake - ArmorStart LT Bulletin 294 provides an optional internally controlled electromechanical motor brake contactor. The motor brake power is sourced from 3-phase power. Short circuit and ground fault protection is provided by branch circuit protection; no internal fuse or circuit breaker is provided.

Quick disconnect - ArmorStart LT offers a plug-n-play solution that simplifies wiring and installation. These factory installed quick disconnect receptacles provide connectivity to separately selected ArmorConnect media and accessories for three-phase, control, and motor connections. UL Listing is maintained when used with appropriate ArmorConnect power media and accessories.

Conduit/Blank gland - Two conduit/cord ready gland options are available. This gland will support a trunk and drop or daisy chain option.

Modes of Operation

Full-Voltage Start - Bulletin 290 or 291
This method is used in applications requiring across-the-line starting. Full in-rush current and locked-rotor torque are realized. The ArmorStart Bulletin 290 offers full-voltage starting, and the Bulletin 291 offers full-voltage starting for reversing applications.

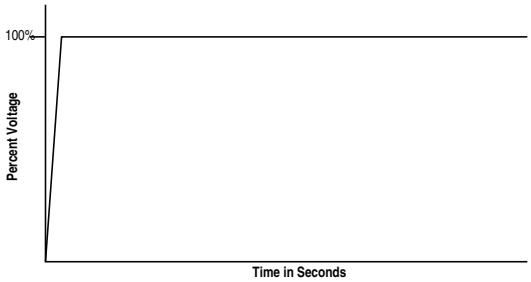

Overload Protection
The Bulletin 290/291 ArmorStart LT Distributed Motor Controller incorporates electronic motor overload protection. This overload protection is accomplished electronically with an I^2t algorithm. The overload protection is programmable with a selectable trip class of 10, 15, or 20. Ambient insensitivity is inherent in the electronic design of the overload.

Volts per Hertz – Bulletin 294
The ArmorStart LT provides a Volts per Hertz variable frequency drive performance. This control yields the most cost effective performance for material handling applications. The VFD is capable of Open Loop Speed Regulation with Slip Compensation. This configuration allows the VFD to automatically adjust the output frequency to compensate for speed changes due to motor loading. This feature is used where the motor must run at a relatively constant speed regardless of torque output.

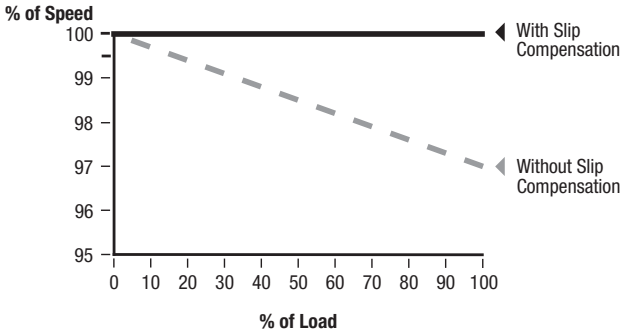

Overload Protection
The Bulletin 294 ArmorStart LT Distributed Motor Controller incorporates programmable electronic motor overload protection. This overload protection is accomplished electronically with an I^2t algorithm. The overload provides Class 10 protection with speed sensitivity and overload retention. Ambient insensitivity is inherent in the electronic design of the overload.

Status and Diagnostics

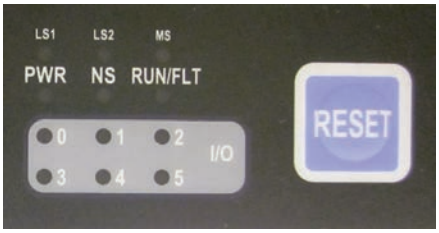

ArmorStart LT provides comprehensive status and diagnostics on the electronics control module (ECM).

- Power Status
- Run / Fault Status
- Network Status
- Module Status (EtherNet/IP version)
- Pt0 – 5 I/O Status
- Link Status (EtherNet/IP version)
- Local Fault Reset

Fault Diagnostics
ArmorStart LT provides Protection Fault information when potentially dangerous or damaging conditions are detected. When a fault is detected the Run/Fault Status will blink a specific number of times to indicate one of the following conditions.

LED Blink	Bulletin 290/291	Bulletin 294
1	Overload Trip	Overload Trip
2	Phase Loss Trip	Phase Short Trip
3	Under Power Trip	Under Power Trip
4	Sensor Short Trip	Sensor Short Trip
5	Phase Imbalance Trip	Overcurrent Trip
6	NonVolatile Memory Trip	NonVolatile Memory Trip
7	reserved	Parameter Sync Trip
8	Jam Trip	DC Bus/Open Disconnect Trip
9	Stall Trip	Stall Trip
10	Underload Trip	Overtemperature Trip
11	reserved	Ground Fault
12	reserved	Restart Retries Trip
13	reserved	Drive Hardware Fault
14	Output Short Trip	Output Short Trip
15	User-Defined Trip	User-Defined Trip
16	Hardware Fault Trip	Hardware Fault Trip

290/291 ArmorStart Distributed Motor Controller

- On-Machine starting solution
- Full-voltage and reversing motor starting
- Horsepower range 0.5…5 Hp (0.37…3 kW)
- EtherNet/IP or DeviceNet communications
- Robust IP66/UL Type 4/12 enclosure
- Quick disconnect connections for I/O communications
- Conduit entrance or ArmorConnect power media gland plate
- LED status and diagnostic indication
- Local logic technology using DeviceLogix
- Peer-to-Peer (ZIP) for DeviceNet versions
- Factory installed option:
  - Hand/Off/Auto (HOA) keypad
  - Quick-disconnect power, control, and motor receptacle
  - Internal power supply

Table of Contents

Product Selection 8
Options 9
Accessories..... 29
Specifications..... 10
Approx. Dimensions . 16

Standards Compliance

UL 508
CSA C22.2, No. 14
EN/IEC 60947-1
EN/IEC 60947-4-1
CE Marked per Low Voltage Directive 2006/95/EC; EMC 2004/108/EC
CCC (pending), KCC, C-Tick

Certifications

cULus (File No. E3125, Guides NLDX, NLDX7)

Catalog Number Explanation

Examples given in this section are for reference purposes. This basic explanation should not be used for product selection; not all combinations will produce a valid catalog number.

290	E	–	F	A	Z	–	G1	–	Option 1	–	Option 2
a	*b*		*c*	*d*	*e*		*f*		*g*		*h*

a

Bulletin Number	
Code	Description
290	Full-Voltage Starter
291	Reversing Starter

b

Communications	
Code	Description
E	EtherNet/IP
D	DeviceNet

c

Enclosure Type	
Code	Description
F	IP66/UL Type 4/12★

d

Overload Selection	
Code	Description
A	0.24…3.5 A
B	1.1…7.6 A

e

Control Voltage	
Code	Description
Z	External 24V DC control power
P	Internal power supply

f

Gland Plate Options (Power and Motor)	
Code	Description
G1	Conduit entry
G2	ArmorConnect
G3♣	Gland kits

g

Option 1	
Code	Description
3	Hand/Off/Auto selector keypad
3FR	Hand/Off/Auto selector keypad with Forward/Reverse

h

Option 2	
Code	Description
blank§	Factory option

★ IP66/UL Type 4 is available with all gland options. UL Type 4/12 is available with G1 and G3 gland option.
♣ See the Accessories section for special gland configurations for daisy chaining.
§ Leave blank unless there is a customer-specific option defined by the factory.

EtherNet/IP Network Communication

Full-voltage starters — IP66/UL Type 4/12 with conduit entrance, up to 480Y/277V AC

Current Rating [A]	kW		Hp		External 24V DC Control Voltage	Internal 24V DC Control Voltage
	230V AC, 50 Hz	400/415V AC, 50 Hz	200/230V AC, 60 Hz	460V AC, 60 Hz	Cat. No.	Cat. No.
0.24…3.5	0.75	1.5	1	2	290E-FAZ-G1♣	290E-FAP-G1♣
1.1…7.6	1.5	3	2	5	290E-FBZ-G1♣	290E-FBP-G1♣

Full-voltage starters — IP66/UL Type 4 with ArmorConnect power media connections, up to 480Y/277V AC

Current Rating [A]	kW		Hp		External 24V DC Control Voltage	Internal 24V DC Control Voltage
	230V AC, 50 Hz	400/415V AC, 50 Hz	200/230V AC, 60 Hz	460V AC, 60 Hz	Cat. No.	Cat. No.
0.24…3.5	0.75	1.5	1	2	290E-FAZ-G2	290E-FAP-G2
1.1…7.6	1.5	3	2	5	290E-FBZ-G2	290E-FBP-G2

Reversing starters — IP66/UL Type 4/12 with conduit entrance, up to 480Y/277V AC

Current Rating [A]	kW		Hp		External 24V DC Control Voltage	Internal 24V DC Control Voltage
	230V AC, 50 Hz	400/415V AC, 50 Hz	200/230V AC, 60 Hz	460V AC, 60 Hz	Cat. No.	Cat. No.
0.24…3.5	0.75	1.5	1	2	291E-FAZ-G1♣	291E-FAP-G1♣
1.1…7.6	1.5	3	2	5	291E-FBZ-G1♣	291E-FBP-G1♣

Reversing starters — IP66/UL Type 4 with ArmorConnect power media connections, up to 480Y/277V ACC

Current Rating [A]	kW		Hp		External 24V DC Control Voltage	Internal 24V DC Control Voltage
	230V AC, 50 Hz	400/415V AC, 50 Hz	200/230V AC, 60 Hz	460V AC, 60 Hz	Cat. No.	Cat. No.
0.24…3.5	0.75	1.5	1	2	291E-FAZ-G2	291E-FAP-G2
1.1…7.6	1.5	3	2	5	291E-FBZ-G2	291E-FBP-G2

DeviceNet Network Communications

Full-voltage starters — IP66/UL Type 4/12 with conduit entrance, up to 480Y/277V AC

Current Rating [A]	kW		Hp		External 24V DC Control Voltage	Internal 24V DC Control Voltage
	230V AC, 50 Hz	400/415V AC, 50 Hz	200/230V AC, 60 Hz	460V AC, 60 Hz	Cat. No.	Cat. No.
0.24…3.5	0.75	1.5	1	2	290D-FAZ-G1♣	290D-FAP-G1♣
1.1…7.6	1.5	3	2	5	290D-FBZ-G1♣	290D-FBP-G1♣

Full-voltage starters — IP66/UL Type 4 with ArmorConnect power media connections, up to 480Y/277V AC

Current Rating [A]	kW		Hp		External 24V DC Control Voltage	Internal 24V DC Control Voltage
	230V AC, 50 Hz	400/415V AC, 50 Hz	200/230V AC, 60 Hz	460V AC, 60 Hz	Cat. No.	Cat. No.
0.24…3.5	0.75	1.5	1	2	290D-FAZ-G2	290D-FAP-G2
1.1…7.6	1.5	3	2	5	290D-FBZ-G2	290D-FBP-G2

Reversing starters — IP66/UL Type 4/12 with conduit entrance, up to 480Y/277V AC

Current Rating [A]	kW		Hp		External 24V DC Control Voltage	Internal 24V DC Control Voltage
	230V AC, 50 Hz	400/415V AC, 50 Hz	200/230V AC, 60 Hz	460V AC, 60 Hz	Cat. No.	Cat. No.
0.24…3.5	0.75	1.5	1	2	291D-FAZ-G1♣	291D-FAP-G1♣
1.1…7.6	1.5	3	2	5	291D-FBZ-G1♣	291D-FBP-G1♣

Reversing starters — IP66/UL Type 4 with ArmorConnect power media connections, up to 480Y/277V AC

Current Rating [A]	kW		Hp		External 24V DC Control Voltage	Internal 24V DC Control Voltage
	230V AC, 50 Hz	400/415V AC, 50 Hz	200/230V AC, 60 Hz	460V AC, 60 Hz	Cat. No.	Cat. No.
0.24…3.5	0.75	1.5	1	2	291D-FAZ-G2	291D-FAP-G2
1.1…7.6	1.5	3	2	5	291D-FBZ-G2	291D-FBP-G2

♣ If required, replace the G1 suffix code with G3 and refer to the User-Installed Options for kit selection.

Options — Factory Installed

Description		For Use With, Bulletin	Cat. No. Modification
	Hand/Off/Auto Selector Keypad	290	-3
	Hand/Off/Auto Selector Keypad with Forward/Reverse Function	291	-3FR
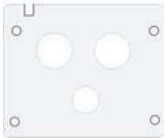	Conduit/Cord-Ready Gland Plate	290/291	-G1
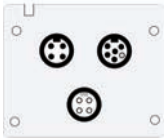	ArmorConnect Power Media Connectivity Gland Plate	290/291	-G2

Options — User-Installed G3 Gland

Description		Pkg. Quantity	For Use With, Bulletin	Cat. No.
Alternative Gland Plates for Daisy Chain Power	Use when punching custom gland.	5 each (screws included)	290/291	290-G3-A1
	Use when no IPS and no SB options are selected.			290-G3-A2
	Use when IPS option is selected and no SB option is selected.			290-G3-A4

Bulletin 290E/291E Feature Diagram

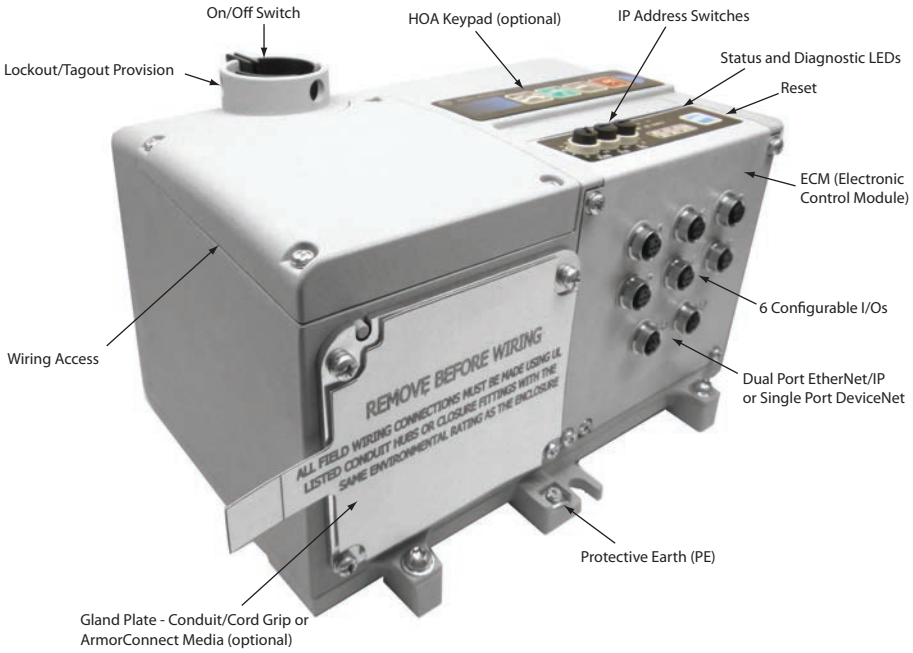

Electrical Ratings				
Power Circuit	Application	Three-phase		
	Number of Poles	3		
	Input Power Terminals	L1, L2, L3		
	Motor Power Terminals	T1, T2, T3		
	PE (Earth Ground) Terminal	4 PE terminals		
	Maximum Rated Operating Voltage	400Y/230…480Y/277 (-15%, +10%)		
	Rated Impulsed Voltage (U_{imp})	4 kV		
	Dielectric Withstand	**UL**: 1960V AC, **IEC**: 2500V AC		
	Operating Frequency	50/60 Hz (±10%)		
	Maximum Rated Operating Current	**Cat. No.**	**Hp (kW)**	**Overload Range**
		290_-___-A-* 291_-___-A-*	2 (1.5)	0.24…3.5 A
		290_-___-B-* 291_-___-B-*	5 (3)	1.1…7.6 A
	Overload Type	Solid-state I^2T		
	Trip Class	**[10]**, 15, 20 with thermal memory retention (see Motor Overload Trip Curves)		
	Trip Rating — Full Load Current (FLC))	120% of FLC		
	Reset Mode	Automatic or manual		
	Overload Reset Level	1…100% TCU		
	Overvoltage Category	III		
Control Circuit (External Source)	Power Supply	NEC Class 2		
	Rated Operating Voltage	24V DC (+10%, -20%)		
	Overvoltage Protection	Reverse-polarity protected		
	Unswitched Power Supply Requirements	Voltage	19.2…26.4V DC	
		Nominal Current	150 mA	
		Power	3.6 W	
		Input Current (each)★	50 mA	
		Maximum Current	450 mA	
		Maximum Power	14.4 W	
		Peak Inrush‡	<5 A for 35 ms	
	Switched Power Supply Requirements	Voltage	19.2…26.4V DC	
		Nominal Current	125 mA	
		Power	3 W	
		Output Current (each)★	500 mA	
		Maximum Current	1.625 A	
		Maximum Power	42 W	
		Peak Inrush‡	<5 A for 35 ms	
	Switched and Unswitched Power Supply Requirements	Voltage	19.2…26.4V DC	
		Nominal Current	275 mA	
		Power	6.6 W	
		Number of Inputs (x 50 mA)	user defined	
		Number of Outputs (x 500 mA)	user defined	
		Maximum Current	275 mA + user defined	
		Maximum Power	6.6 W + (24V DC x user defined), (60 W max.)	
		Peak Inrush‡	<10 A for 35 ms	
Control Circuit (Internal Source)	An internal 50 W power supply sources 24V DC for input, outputs, and logic control.			
Short Circuit Current Rating (SCCR)	**Cat. No.**	**Sym. Amps RMS**	**Circuit Breaker**	**Fuse**
	290/1_-*-G1 (or G3)	10 kA @ 480Y/277	When used with Allen-Bradley Cat. No. 140U-D6D3-C30	CC, J, or T fuse (maximum 45 A)
	290/1_-*-G1 (or G3)	5 kA @ 480Y/277		UL Class fuse (maximum 45 A)
	290/1_-*G2	10 kA @ 480Y/277		CC, J, or T fuse (maximum 40 A)
Short Circuit Coordination	Type 1			
	Size per NFPA 70 (NEC) or NFPA 79 for Group Motor Applications			

★ I/O is configurable to either input or output.
‡ Assumes zero wire resistance. Wire impedance will reduce current inrush.

Input and Output Ratings		
Input	Supply Voltage	Unswitched power A3/A2
	Type of Inputs	24V DC current sinking
	Connection Type	Single keyed M12, quick disconnect
	Input per Connection	1/each
	Rated Operating Voltage	24V DC
	On-State Input Voltage (pin 4)	10…26.4V DC, nominal 24V DC
	Off-State Input Voltage	5V DC
	On-State Input Current (pin 4)	1…3.7 mA, 2.6 mA @ 24V DC
	Off-State Input Current	<1.5 mA
	Maximum Sensor Leakage Current	<2.5 mA
	Maximum Number of Input Devices	6
	Maximum Sensor Sourcing Current (pin 1)	50 mA per point (maximum 300 mA total for sourcing one device)
	Sensor Operating Voltage Range	19.2…26V DC
	Input Bounce Filter§ (Software Configurable)	Off-On or On-Off: 0.5 ms + 64 ms
	Filtering	100 µs
	DeviceLogix I/O Response	2 ms (500 Hz)
Output	Supply Voltage (Switched Power)	A1/A2
	Type of Outputs	DC sourcing
	Load Types	Resistive or light inductive
	Utilization Category (IEC)	DC-1, DC-13
	Output State	Normally Open (N.O.)
	Connection Type	Single keyed M12, quick disconnect
	Output per Connection	1/each
	Overcurrent Protection♣	1.5 A (the sum of all outputs can not exceed this value)
	Rated Insulation Voltage (U_i)	**UL**: 1500V AC, **IEC**: 2000V AC
	Rated Operating Voltage (U_e)	19.2…26.4V DC
	Maximum Blocking Voltage	35V DC
	Nominal Operating Current (I_e)	500 mA per point
	Maximum Thermal Current (I_{the})	500 mA per point
	Maximum Off-state Leakage Current	1 µA
	Maximum Number of Outputs	6
	Surge Suppression	Integrated diode to protect against switching loads

§ Input ON-to-OFF delay time is the time from a valid input signal to recognition by the module.
♣ If an output exceeds 1.5 A for greater than 7 ms, a fault is generated.

Environmental Ratings	
Operating Temperature Range	-20…+50 °C (-4…+122 °F)
Storage and Transportation Temperature Range	–25...+85 °C (–13…+185 °F)
Altitude	2000 m
Humidity	5…95% (non-condensing)
Pollution Degree	3
Enclosure Ratings	IP66/UL Type 4/12♦
Approximate Shipping Weight	4.6 kg (10 lb)

♦ IP66/UL Type 4 is available with gland options G1-3. IP66/UL Type 4/12 available with G1 and G3 gland option.

Mechanical Ratings				
Resistance to Shock	Operational	30 G, exceeds IEC 60947-1		
	Non-Operational	50 G, exceeds IEC 60947-1		
Resistance to Vibration	Operational	2.5 G, tested to MIL-STD-810G, exceeds IEC 60947-1		
	Non-Operational	5 G, tested to MIL-STD-810G, exceeds IEC 60947-1		
Disconnect Lock Out	Maximum of 3/8 in. (9.5 mm) diameter lock shackle or hasp			
Disconnect LOTO Locks	Up to 2 locks or hasps are supported			
Disconnect Mechanical Life	200 000 operations			
Contactor Utilization Category (IEC)	AC-1, AC-3, AC-4 (refer to Life Load Curves)			
Contactor Opening Delay	8…12 ms			
Contactor Closing Delay	18…40 ms			
Minimum Off Time	200 ms			
Contactor Mechanical Life	15 million operations			
	Power Terminals	**Motor Terminals**	**Control Terminals**	**PE/Ground**
Wire Size★	(2) #18…#10 AWG (0.8…5.2 mm^2) per terminal	#18…#10 AWG (0.8…5.2 mm^2) per terminal	(2) #18…#10 AWG (0.8…5.2 mm^2) per terminal	(2) #16…#10 AWG (1.3…5.2 mm^2) per terminal
Wire Type	Multi-strand/solid copper wire			
Tightening Torque	10.6 ± 2 lb•in (1.2 ± 0.2 N•m)			18 ± 2 lb•in (2 ± 0.2 N•m)
Wire Strip Length	0.35 ± 0.01 in. (9 ± 2 mm)			
Power Rating	600V AC/25 A	600V AC/10 A	600V AC/10 A	—

★ When two wires are used in a terminal block, both wires must be the same wire AWG.

Emission and Immunity Ratings		
Emission	Conducted	EN 60947-4-1 Class A
	Radiated	
	Electrostatic Discharge	4 kV contact, 8 kV air
	Radio Frequency Electromagnetic Field	EN 60947-4-1 10V/m, 80 MHz…1 GHz 10V/m, 1.4 GHz…2 GHz
Immunity	Fast Transient	2 kV (Power) 2 kV (PE) 1 kV (Communication and control)
	Surge Transient	1 kV (12) $_{L-L}$, 2 kV (2) $_{L-N}$ (earth)
	Radio Frequency Conducted Disturbance	10V, 150 kHz…80 MHz

Standards Compliance and Certifications			
	UL/CSA	**EN/IEC**	**Other Agencies**
Standards Compliance	UL 508 Industrial Control Equipment – Suitable for Group Installation CSA C22.2, No. 14	EN 60947-4-1 Low Voltage Switchgear CE Marked per Low Voltage Directive 2006/95/EC and EMC Directive 2004/108/EC	CCC (pending) KCC C-Tick ODVA for EtherNet/IP and DeviceNet
Certifications	cULus (File No. E3125, Guide NLDX, NLDX7)		

Communication Ratings		
	Rated Insulation Voltage	250V
	Operating Dielectric Withstand	**UL/NEMA**: 1500V AC, **IEC**: 2000V AC
DeviceNet	DeviceNet Supply Voltage Rating	Range 11…25V DC, 24V DC nominal
	DeviceNet Input Current	50 mA @ 24V DC
	DeviceNet Input Current Surge	500 mA peak inrush
	Baud Rates	125, 250, 500 kbps
	Distance Maximum	500 m (1630 ft) @ 125 kbps 200 m (656 ft) @ 250 kbps 100 m (328 ft) @ 500 kbps
	Auto-Baud Rate Identification	Yes
	"Group 2 - Slave Only" Device Type	Yes
	Polled I/O Messaging	Yes
	Change of State Messaging	Yes
	Cyclic Messaging	Yes
	Explicit Messaging	Yes
	Full Parameter Object Support	Yes
	Group 4 - Off-Line Node Recovery Messaging	Yes
	Configuring Consistency Value	Yes
	Unconnected Messaging Manager (UCMN)	Yes
EtherNet/IP	EtherNet/IP ODVA - Conformance Testing	EtherNet/IP Interoperability Performance – Per A9 PF 2.1
	Ethernet Communication Rate	10/100 Mbps, half or full-duplex
	Ethernet Ports	2 (embedded switch)
	Ethernet Network Topologies Supported	Star, Tree, Linear, and Ring
	Device Level Ring Support	Beacon Performance, IEEE 1588 Transparent Clock
	Ethernet Connector	M12, D code, female, with Ethernet keying, 4 Pin
	Ethernet Cable	Category 5e: Shielded or unshielded
	IP Configuration	Static, DHCP, or BootP
	DHCP Timeout	30 s
	Data	Transported over both TCP and UDP
	Packet Rate (pps)	500 packets-per-second (2000 µs), Tx 500 packets-per-second (2000 µs), Rx
	Consume Instance (Command)	Default of 3 words (Instance 150)
	Produce Instance (Status)	Default of 14 words (Instance 152)
	Message Support	Unicast or Multicast
	Address Conflict Detection (ACD)	IP v4 Address Conflict Detection for EtherNet/IP devices
	Sockets	150 maximum
Web Server	Security	Login and password configurable
	E-mail	Support Simple Mail Transfer Protocol (SMTP)
	Webpage Features	Status, diagnostics, configuration
	Concurrent Sessions	20
	Web Server	HTTP 1.1
Network Connections	Concurrent TCP Connections	Maximum of 15 encapsulated messages over both TCP and UDP
	Maximum I/O Connections (CIP Class 1)	Supports up to 2 Class 1 CIP connections (Exclusive owner (data) or listen-only). One connection per PLC. Listen-only connection requires a data connection to be established.
	Maximum Concurrent Explicit Messages (CIP Class 3)	6
	Class 1 Connection API	2…3200 ms
	Class 3 Connection API	100…10 000 ms
	Request Packet Interval (RPI)	20 ms default (2 ms minimum)

Motor Overload Trip Curves

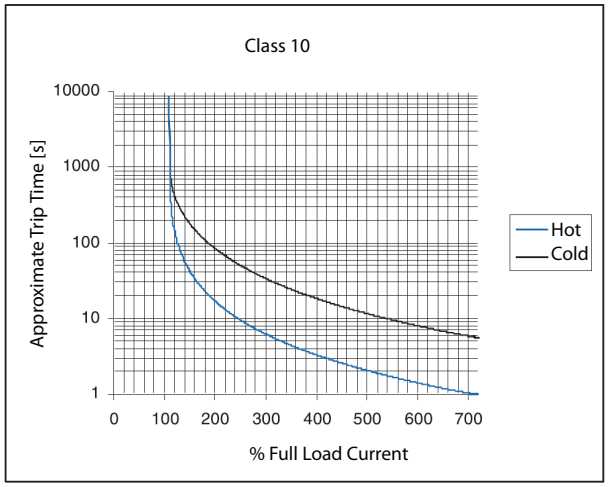

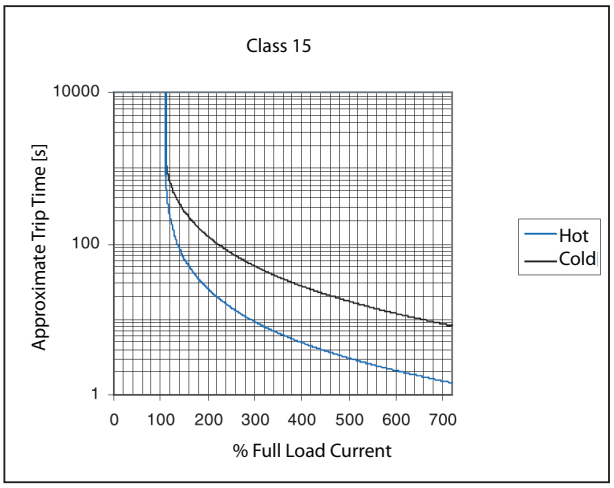

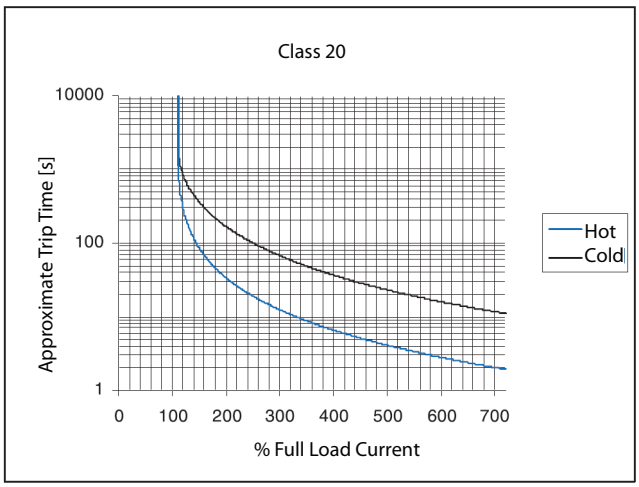

Bulletin 100-K/104-K Life-Load Curves

Electrical life; Ue = 400…460V AC

AC-3 : Switching of squirrel-cage motors while starting

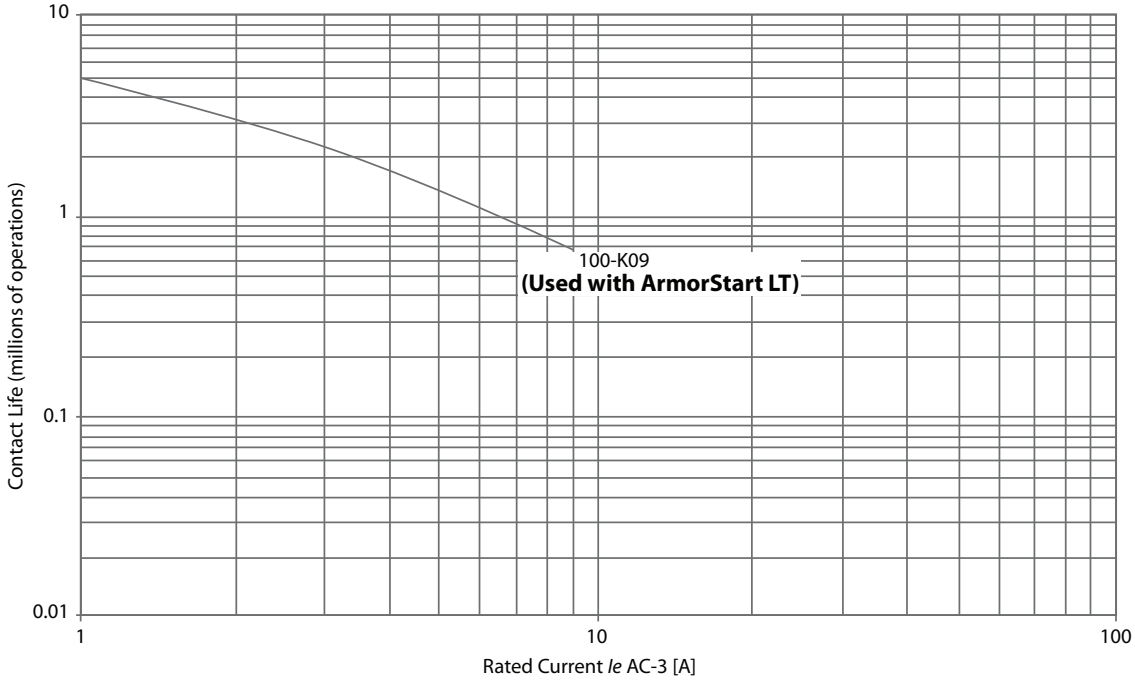

Electrical life; Ue = 400…460V AC

AC-4 : Stepping of squirrel-cage motors

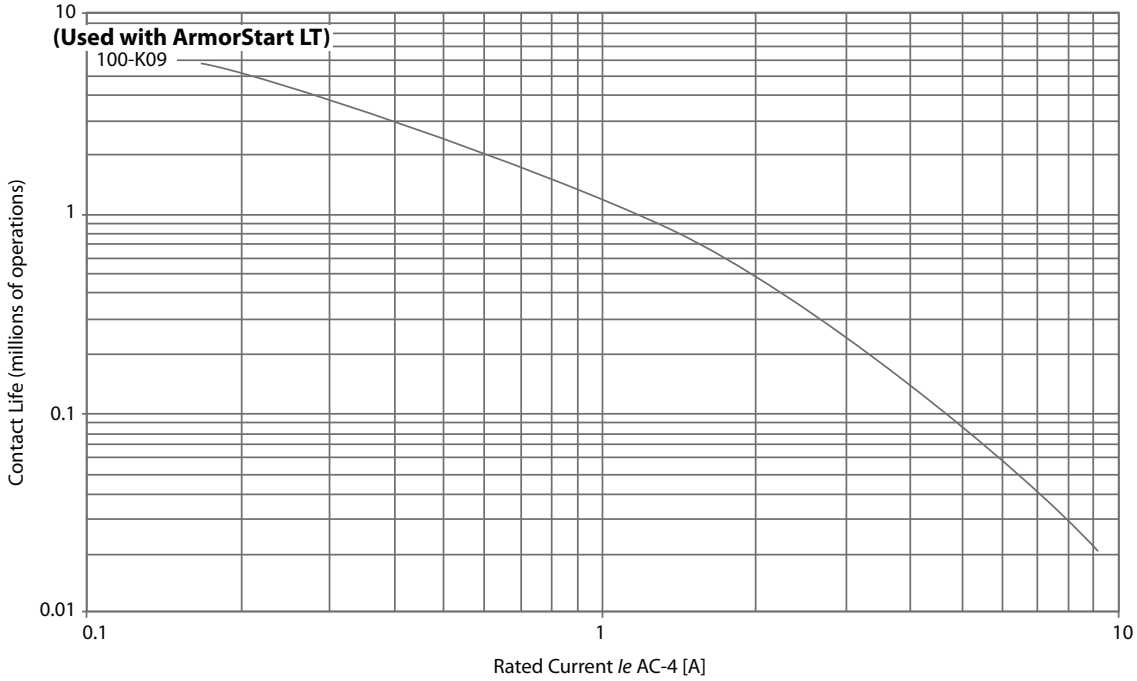

Approximate Dimensions/Mount Orientation

Dimensions in millimeters (inches). Dimensions are not intended to be used for manufacturing purposes. All dimensions are subject to change.

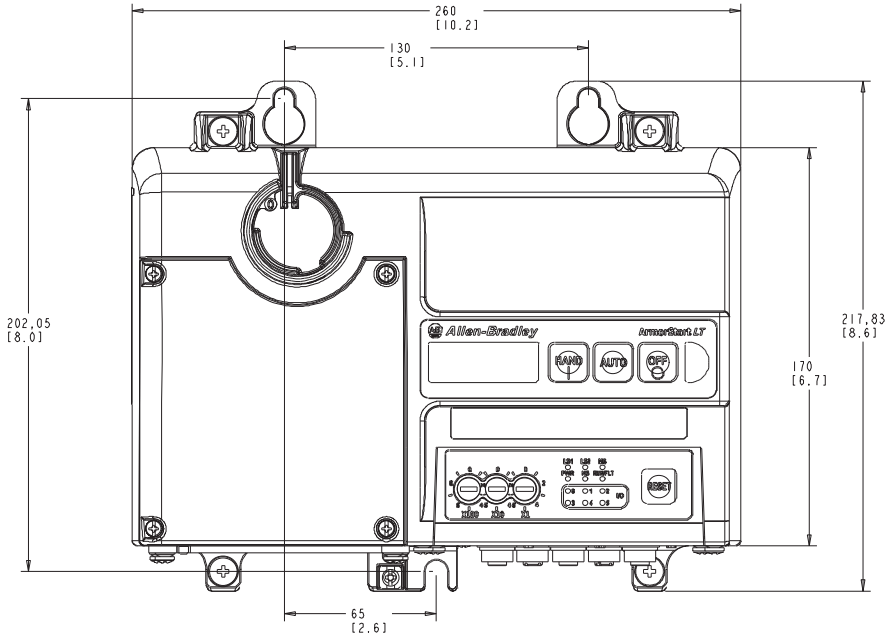

Front View

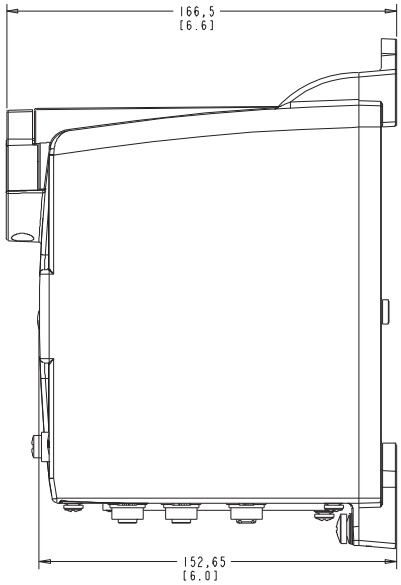

Right Side View

Acceptable Mount Orientations

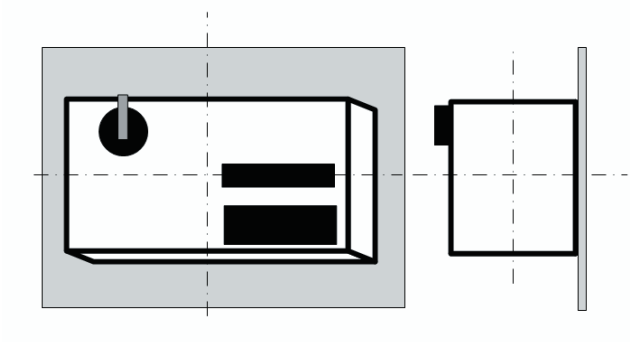

Important: For maximum product life and maximum heat sink efficiency, mount the device vertically as shown.

Dimensions in millimeters (inches). Dimensions are not intended to be used for manufacturing purposes. All dimensions are subject to change.

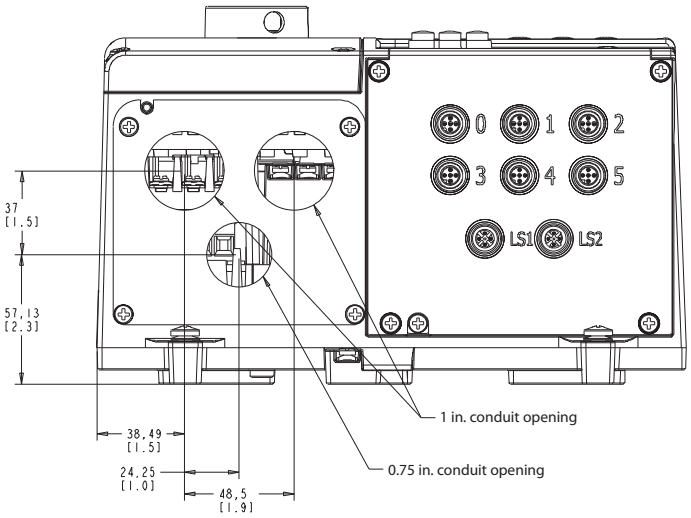

Conduit Gland Entrance

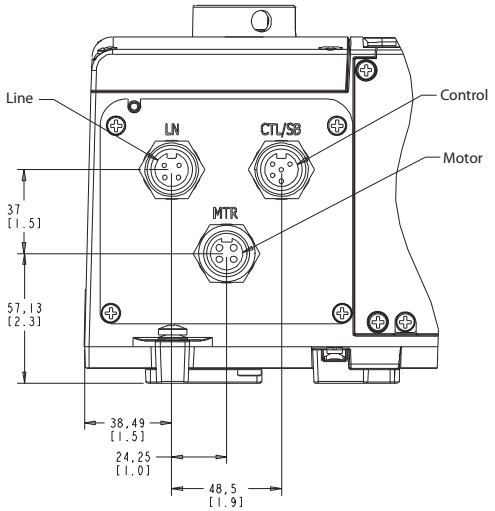

ArmorConnect Media Gland Entrance (optional)

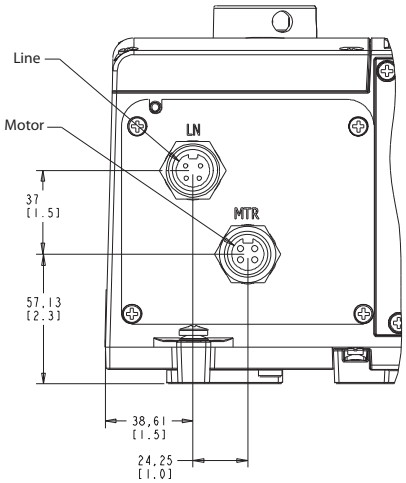

ArmorConnect Internal Power Supply Gland Plate (optional)

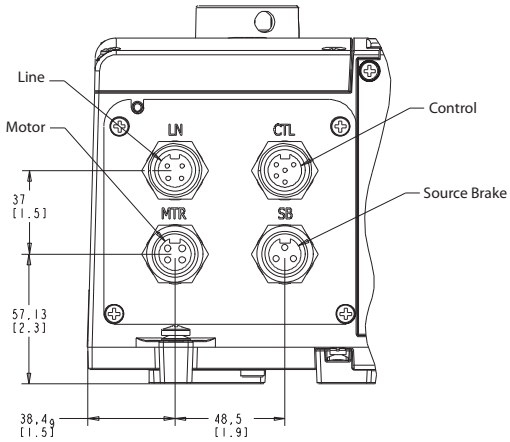

ArmorConnect Source Brake Gland Plate (optional)

See ArmorStart LT Gland Plate on page 28 for gland plate dimensions.

ArmorStart LT Distributed Motor Controllers

Overview/Cat. No. Explanation

Bulletin 294 ArmorStart Distributed Motor Controller

- On-Machine starting solution
- Variable frequency drive (V/Hz)
- Internal EMI filter
- Horsepower range 0.5…2 Hp (0.37…1.5 kW)
- EtherNet/IP or DeviceNet communications
- Robust IP66/UL Type 4/12 enclosure
- Quick disconnect for I/O communications
- Conduit entrance or ArmorConnect power media gland plate
- LED status and diagnostic indication
- Local logic technology using DeviceLogix
- Peer-to-peer (ZIP) for DeviceNet versions
- Factory installed options:
  - Hand/Off/Auto (HOA) keypad configuration
  - Source brake receptacle
  - Quick disconnect: power, control, and motor receptacles
  - Internal power supply

Table of Contents

Product Selection 18
Options 18
Accessories..... 29
Specifications..... 20
Approximate Dimensions..... 25

Standards Compliance

UL 508C
CSA C22.2, No. 14
EN/IEC 60947-1, EN/IEC 61800-5-1, EN/IEC 61800-3
CE Marked per Low Voltage Directive 2006/95/EC; EMC 2004/108/EC
CCC (pending), KCC, C-Tick

Certifications

cULus (File No. E207834, Guide NMMS, NMMS7)

Catalog Number Explanation

Examples given in this section are for reference purposes. This basic explanation should not be used for product selection; not all combinations will produce a valid catalog number.

294	E	–	F	D1P5	Z	–	G1	–	Option 1	–	Option 2
a	*b*		*c*	*d*	*e*		*f*		*g*		*h*

a

Bulletin Number	
Code	Description
294	VFD Starter

b

Communications	
Code	Description
E	EtherNet/IP
D	DeviceNet

c

Enclosure Type	
Code	Description
F	IP66/UL Type 4/12★

d

Output Current	
Code	Description
D1P5	1.5 A (0.37 kW), 0.5 Hp
D2P5	2.5 A (0.75 kW), 1.0 Hp
D4P2	3.6 A (1.5 kW), 2.0 Hp

e

Control Voltage	
Code	Description
Z	External 24V DC control power
P	Internal power supply

f

Gland Plate Options (Power and Motor)	
Code	Description
G1	Conduit entry
G2	ArmorConnect
G3♣	Gland kits

g

Option 1	
Code	Description
3	Hand/Off/Auto selector keypad with Jog function

h

Option 2	
Code	Description
SB	Source brake
blank§	Factory option

★ IP66/UL Type 4 is available with all gland options. UL Type 4/12 is available with G1 and G3 gland option.
♣ See the Accessories section for special gland configurations for daisy chaining.
§ Leave blank unless there is a customer-specific option defined by the factory.

VFD (V/Hz) - EtherNet/IP Network Communication

IP66/UL Type 4/12 with conduit entrance and EMI filter, VFD (V/Hz)

Input Voltage	Output Voltage [V]	Input Current [A]	Output Current [A]	3-Phase kW Rating	3-Phase Hp Rating	External 24V DC Control Voltage Cat. No.	Internal 24V DC Control Voltage Cat. No.
380Y/220V…480Y/277V AC (+/- 10%), 3-phase, 50/60 Hz	0…460	1.8	1.5	0.37	0.5	294E-FD1P5Z-G1♣	294E-FD1P5P-G1♣
		3	2.5	0.75	1	294E-FD2P5Z-G1♣	294E-FD2P5P-G1♣
		5.5	3.6	1.5	2	294E-FD4P2Z-G1♣	294E-FD4P2P-G1♣

IP66/UL Type 4 with ArmorConnect and EMI filter, VFD (V/Hz)

Input Voltage	Output Voltage [V]	Input Current [A]	Output Current [A]	3-Phase kW Rating	3-Phase Hp Rating	External 24V DC Control Voltage Cat. No.	Internal 24V DC Control Voltage Cat. No.
380Y/220V…480Y/277V AC (+/- 10%), 3-phase, 50/60 Hz	0…460	1.8	1.5	0.37	0.5	294E-FD1P5Z-G2	294E-FD1P5P-G2
		3	2.5	0.75	1	294E-FD2P5Z-G2	294E-FD2P5P-G2
		5.5	3.6	1.5	2	294E-FD4P2Z-G2	294E-FD4P2P-G2

VFD (V/Hz) - DeviceNet Network Communication

IP66/UL Type 4/12 with conduit entrance and EMI filter, VFD (V/Hz)

Input Voltage	Output Voltage [V]	Input Current [A]	Output Current [A]	3-Phase kW Rating	3-Phase Hp Rating	External 24V DC Control Voltage Cat. No.	Internal 24V DC Control Voltage Cat. No.
380Y/220V…480Y/277V AC (+/- 10%), 3-phase, 50/60 Hz	0…460	1.8	1.5	0.37	0.5	294D-FD1P5Z-G1♣	294D-FD1P5P-G1♣
		3	2.5	0.75	1	294D-FD2P5Z-G1♣	294D-FD2P5P-G1♣
		5.5	3.6	1.5	2	294D-FD4P2Z-G1♣	294D-FD4P2P-G1♣

IP66/UL Type 4 with ArmorConnect and EMI filter, VFD (V/Hz)

Input Voltage	Output Voltage [V]	Input Current [A]	Output Current [A]	3-Phase kW Rating	3-Phase Hp Rating	External 24V DC Control Voltage Cat. No.	Internal 24V DC Control Voltage Cat. No.
380Y/220V…480Y/277V AC (+/- 10%), 3-phase, 50/60 Hz	0…460	1.8	1.5	0.37	0.5	294D-FD1P5Z-G2	294D-FD1P5P-G2
		3	2.5	0.75	1	294D-FD2P5Z-G2	294D-FD2P5P-G2
		5.5	3.6	1.5	2	294D-FD4P2Z-G2	294D-FD4P2P-G2

♣ If required, replace the G1 suffix code with G3 and refer to the User-Installed Options for kit selection.

Options — Factory Installed

Description		Cat. No. Modification
	Hand/Off/Auto selector and Jog keypad	-3
	Source brake (electromechanical)	-SB
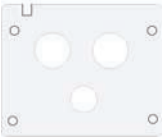	Conduit/Cord-Ready Gland Plate	-G1
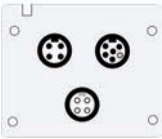	ArmorConnect Power Media Connectivity Gland Plate	-G2

Options — User-Installed G3 Gland

Description		Pkg. Quantity	For Use With, Bulletin	Cat. No.
Alternative Gland Plates for Daisy Chain Power	Use when punching custom gland.	5 each (screws included)	294	290-G3-A1
	Use when no IPS and no SB options are selected.			290-G3-A2
	Use when SB option is selected and no IPS option is selected.			290-G3-A3
	Use when IPS option is selected and no SB option is selected.			290-G3-A4
	Use when IPS and SB options are selected.			290-G3-A5

Bulletin 294E Feature Diagram

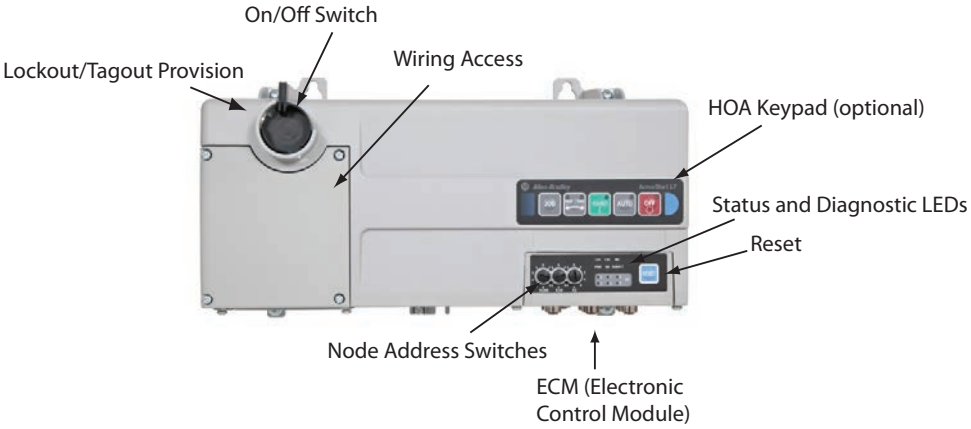

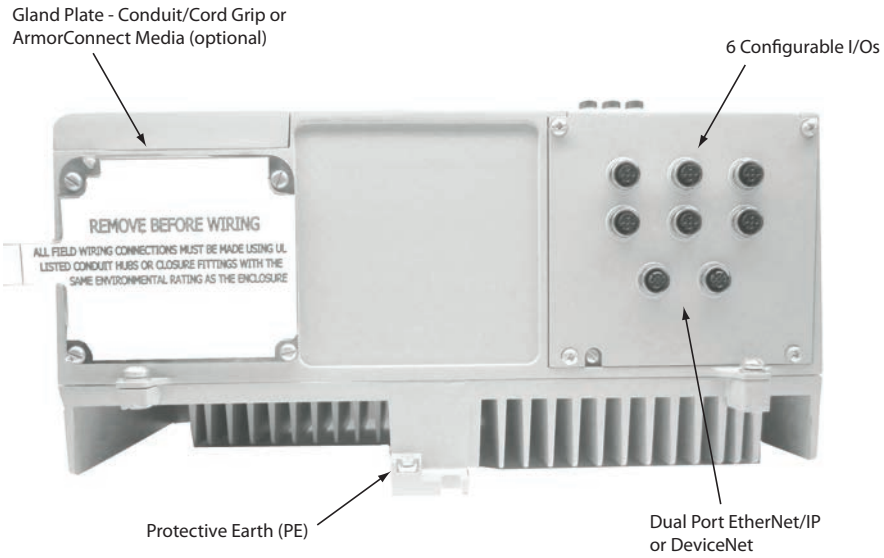

Electrical Ratings		
Power Circuit	Application	Three-phase
	Number of Poles	3
	Input Power Terminals	L1, L2, L3
	Motor Power Terminals	T1, T2, T3
	PE (Earth Ground) Terminal	4 PE terminals
	Maximum Rated Operating Voltage	400Y/230…480Y/277 (-15%, +10%)
	Rated Impulsed Voltage (U_{imp})	4 kV
	Dielectric Withstand	**UL**: 1960V AC, **IEC**: 2500V AC
	Operating Frequency	50/60 Hz (±10%)

Electrical Ratings — Variable Frequency Drive						
Power Circuit	Maximum Rated Operating Current	**Cat. No.**	**Hp (kW)**	**Input Amps 400V AC, 50 Hz**	**Input Amps 480V AC, 60 Hz**	**Output Amps**
		294_-FD1P5*	0.5 (0.37)	2.0	1.8	1.5
		294_-FD2P5*	1.0 (0.75)	3.7	3.0	2.5
		294_-FD4P2*	2.0 (1.5)	6.5	5.5	3.6
	Overload Protection	Solid-state I^2T type	150% for 60 s or 200% for 3 s			
		Trip Class	Class 10 protection with speed sensitive response and power-down overload retention function			
		Overcurrent Protection	200% hardware limit, 300% instantaneous fault			
	Overvoltage Category		III			
	Reset Mode		Automatic or manual			
	Output Frequency		0…400 Hz (programmable)			
	Efficiency		97.5% typical			
	Overvoltage		380…480V AC Input – Trip occurs at 810V DC bus voltage (equivalent to 575V AC incoming line)			
	Undervoltage		380…480V AC Input – Trip occurs at 390V DC bus voltage (equivalent to 275V AC incoming line)			
	Control Ride Through		Minimum ride through is 0.5 s — typical value is 2 s			
	Faultless Power Ride Through		10 ms			
	Carrier Frequency		2…10 kHz, drive rating based on 4 kHz			
	Speed Regulation — Open Loop with Slip Compensation		±2% of base speed across a 40:1 speed range			
	Acceleration/Deceleration		Two independently programmable acceleration and deceleration times. Each time may be programmed from 0…600 s, in 0.1 s increments.			
	Maximum Motor Cable Lengths (Reflected Wave Protection)§		10 m (32 ft) (CE application♠) 14 m (45.9 ft) (non-CE application)			
	Source Brake (EM Brake) Current		Maximum load current of 3 A			

§ The reflected wave data applies to all frequencies 2…10 kHz.
♠ For CE compliant installations refer to the recommended EMI/RFI cord grip accessory. For availability of the quick disconnect three-phase shielded power and motor cable, contact your local Rockwell Automation sales office or Allen-Bradley distributor.

Electrical Ratings				
Control Circuit (External Source)	Power Supply	NEC Class 2		
	Rated Operating Voltage	24V DC (+10%, -20%)		
	Overvoltage Protection	Reverse-polarity protected		
	Unswitched Power Supply Requirements	Voltage	19.2…26.4V DC	
		Nominal Current	150 mA	
		Power	3.6 W	
		Input Current (each)★	50 mA	
		Maximum Current	450 mA	
		Maximum Power	14.4 W	
		Peak Inrush‡	<5 A for 35 ms	
	Switched Power Supply Requirements	Voltage	19.2…26.4V DC	
		Nominal Current	125 mA	
		Power	3 W	
		Output Current (each)★	500 mA	
		Maximum Current	1.625 A	
		Maximum Power	42 W	
		Peak Inrush‡	<5 A for 35 ms	
	Switched and Unswitched Power Supply Requirements	Voltage	19.2…26.4V DC	
		Nominal Current	275 mA	
		Power	6.6 W	
		Number of Inputs (x 50 mA)	user defined	
		Number of Outputs (x 500 mA)	user defined	
		Maximum Current	275 mA + user defined	
		Maximum Power	6.6 W + (24 x user defined), (60 W max.)	
		Peak Inrush‡	<10 A for 35 ms	
Control Circuit (Internal Source)	An internal 50 W power supply sources 24V DC for input, outputs, and logic control.			
Short Circuit Current Rating (SCCR)	**Cat. No.**	**Sym. Amps RMS**	**Circuit Breaker**	**Fuse**
	294_-*-G1 or (-G3)	10 kA @ 480Y/277	When used with Allen-Bradley Cat. No. 140U-D6D3-C30	CC, J, or T fuse (maximum 45 A)
	294_-*-G1 or (-G3)	5 kA @ 480Y/277		UL Class fuse (maximum 45 A)
	294_-*-G1-SB	10 kA @ 480Y/277		CC, J, or T fuse (maximum 40 A)
	294_-*-G1-SB	5 kA @ 480Y/277		UL Class fuse (maximum 40 A)
	294_-*-G2*	10 kA @ 480Y/277		CC, J, or T fuse (maximum 40 A)
Short Circuit Coordination	Type 1			
	Size per NFPA 70 (NEC) or NFPA 79 for Group Motor Applications			

★ I/O is configurable to either input or output.
‡ Assumes zero wire resistance. Wire impedance will reduce current inrush.

Input and Output Ratings		
Input	Supply Voltage	Unswitched power A3/A2
	Type of Inputs	24V DC current sinking
	Connection Type	Single keyed M12, quick disconnect
	Input per Connection	1/each
	Rated Operating Voltage	24V DC
	On-State Input Voltage (pin 4)	10…26.4V DC, nominal 24V DC
	Off-State Input Voltage	5V DC
	On-State Input Current (pin 4)	1…3.7 mA, 2.6 mA @ 24V DC
	Off-State Input Current	<1.5 mA
	Maximum Sensor Leakage Current	<2.5 mA
	Maximum Number of Input Devices	6
	Maximum Sensor Sourcing Current (pin 1)	50 mA per point (maximum 300 mA total for sourcing one device)
	Sensor Operating Voltage Range	19.2…26V DC
	Input Bounce Filter∆ (Software Configurable)	Off-On or On-Off: 0.5 ms + 64 ms
	Filtering	100 µs
	DeviceLogix I/O Response	2 ms (500 Hz)
Output	Supply Voltage (Switched Power)	A1/A2
	Type of Outputs	DC sourcing
	Load Types	Resistive or light inductive
	Utilization Category (IEC)	DC-1, DC-13
	Output State	Normally Open (N.O.)
	Connection Type	Single keyed M12, quick disconnect
	Output per Connection	1/each
	Overcurrent Protection♣	1.5 A (the sum of all outputs can not exceed this value)
	Rated Insulation Voltage (U_i)	**UL**: 1500V AC, **IEC**: 2000V AC
	Rated Operating Voltage (U_e)	19.2…26.4V DC
	Maximum Blocking Voltage	35V DC
	Nominal Operating Current (I_e)	500 mA per point
	Maximum Thermal Current (I_{the})	500 mA per point
	Maximum Off-state Leakage Current	1 µA
	Maximum Number of Outputs	6
	Surge Suppression	Integrated diode to protect against switching loads

∆ Input ON-to-OFF delay time is the time from a valid input signal to recognition by the module.
♣ If an output exceeds 1.5 A for greater than 7 ms, a fault is generated.

Environmental Ratings	
Operating Temperature Range	-20…+40 °C (-4…+104 °F) 50 °C (122 °F) without derating, when properly rated line reactors are installed in branch circuit.
Storage and Transportation Temperature Range	–25...+85 °C (–13…+185 °F)
Altitude	1000 m
Humidity	5…95% (non-condensing)
Pollution Degree	3
Enclosure Ratings	IP66/UL Type 4/12♦
Approximate Shipping Weight	7.3 kg (16 lb)

♦ IP66/UL Type 4 is available with gland options G1-3. IP66/UL Type 4/12 available with G1 and G3 gland option.

Mechanical Ratings					
Resistance to Shock	Operational	30 G (exceeds IEC 61800-5-1)			
	Non-Operational	50 G (exceeds IEC 61800-5-1)			
Resistance to Vibration	Operational	2.5 G, MIL-STD-810G, (exceeds IEC 61800-5-1)			
	Non-Operational	5 G, MIL-STD-810G, (exceeds IEC 61800-5-1)			
Disconnect Lock Out	Maximum of 3/8 in. (9.5 mm) diameter lock shackle or hasp				
Disconnect LOTO Locks	Up to 2 locks or hasps are supported				
Disconnect Mechanical Life	200 000 operations				
	Power Terminals	**Motor Terminals**	**Control Terminals**	**PE/Ground**	**Source Brake**
Wire Size★	(2) #18…#10 AWG (0.8…5.2 mm^2) per terminal	#18…#10 AWG (0.8…5.2 mm^2) per terminal	(2) #18…#10 AWG (0.8…5.2 mm^2) per terminal	(2) #16…#10 AWG (1.3…5.2 mm^2) per terminal	#16 …#10 AWG (1.0…4.0 mm^2) per terminal
Wire Type	Multi-strand/solid copper wire				
Tightening Torque	10.6 ± 2 lb•in (1.2 ± 0.2 N•m)			18 ± 2 lb•in (2 ± 0.2 N•m)	4.8 ± 2 lb•in (0.5 ± 0.2 N•m)
Wire Strip Length	0.35 ± 0.01 in. (9 ± 2 mm)				
Power Rating	600V AC/25 A	600V AC/10 A	600V AC/10 A	—	600V AC/10 A

★ When two wires are used in a terminal block, both wires must be the same wire AWG.

Emission and Immunity Ratings		
Emission	Conducted	EN 55011 Class Group 2
	Radiated	
	Electrostatic Discharge	4 kV contact, 8 kV air
	Radio Frequency Electromagnetic Field	EN 61800-3 10V/m, 80 MHz…1 GHz
Immunity	Fast Transient	2 kV (Power) 2 kV (PE) 1 kV (Communication and control)
	Surge Transient	1 kV (12) $_{L-L}$, 2 kV (2) $_{L-N}$ (earth)
	Radio Frequency Conducted Disturbance	10V, 150 kHz…80 MHz

Standards Compliance and Certifications			
	UL/CSA	**EN/IEC**	**Other Agencies**
Standards Compliance	UL 508C Power Conversion Equipment – Suitable for Group Installation CSA C22.2, No. 14	EN 61800 - Adjustable Speed Electrical Power Drive Systems, Part 3: EMC Requirements and Specific Test Methods, CE Marked per EMC Directive 2004/108/EC, Part 5-1: Safety Requirements – Electrical, Thermal and Energy, CE Marked per Low Voltage Directive 2005/95/EC	CCC (Pending) KCC C-Tick ODVA for EtherNet/IP and DeviceNet
Certifications	cULus (File No. E207834, Guides NMMS, NMMS7)		

Motor Overload Trip Curves

Motor overload current parameter provides class 10 overload protection. Ambient insensitivity is inherent in the electronic design of the overload.

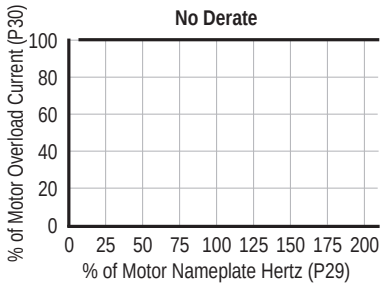

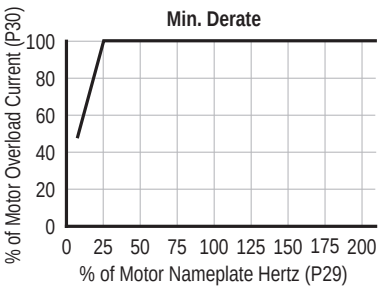

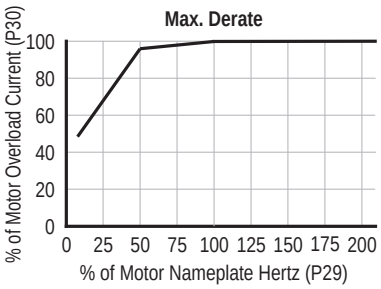

Communication Ratings		
	Rated Insulation Voltage	250V
	Operating Dielectric Withstand	**UL/NEMA**: 1500V AC, **IEC**: 2000V AC
DeviceNet	DeviceNet Supply Voltage Rating	Range 11…25V DC, 24V DC nominal
	DeviceNet Input Current	50 mA @ 24V DC
	DeviceNet Input Current Surge	500 mA peak inrush
	Baud Rates	125, 250, 500 kbps
	Distance Maximum	500 m (1630 ft) @ 125 kbps 200 m (656 ft) @ 250 kbps 100 m (328 ft) @ 500 kbps
	Auto-Baud Rate Identification	Yes
	"Group 2 - Slave Only" Device Type	Yes
	Polled I/O Messaging	Yes
	Change of State Messaging	Yes
	Cyclic Messaging	Yes
	Explicit Messaging	Yes
	Full Parameter Object Support	Yes
	Group 4 - Off-Line Node Recovery Messaging	Yes
	Configuring Consistency Value	Yes
	Unconnected Messaging Manager (UCMN)	Yes
EtherNet/IP	EtherNet/IP ODVA - Conformance Testing	EtherNet/IP Interoperability Performance – Per A9 PF 2.1
	Ethernet Communication Rate	10/100 Mbps, half or full-duplex
	Ethernet Ports	2 (embedded switch)
	Ethernet Network Topologies Supported	Star, Tree, Linear, and Ring
	Device Level Ring Support	Beacon Performance, IEEE 1583 Transparent Clock
	Ethernet Connector	M12, D code, female, with Ethernet keying, 4 Pin
	Ethernet Cable	Category 5e: Shielded or unshielded
	IP Configuration	Static, DHCP, or BootP
	DHCP Timeout	30 s
	Data	Transported over both TCP and UDP
	Packet Rate (pps)	500 packets-per-second (2000 µs), Tx 500 packets-per-second (2000 µs), Rx
	Consume Instance (Command)	Default of 4 words (Instance 154)
	Produce Instance (Status)	Default of 16 words (Instance 156)
	Message Support	Unicast or Multicast
	Address Conflict Detection (ACD)	IP v4 Address Conflict Detection for EtherNet/IP devices
	Sockets	150 maximum
Web Server	Security	Login and password configurable
	E-mail	Support Simple Mail Transfer Protocol (SMTP)
	Webpage Features	Status, diagnostics, configuration
	Concurrent Sessions	20
	Web Server	HTTP 1.1
Network Connections	Concurrent TCP Connections	Maximum of 5 encapsulated messages over both TCP and UDP
	Maximum I/O Connections (CIP Class 1)	Supports up to 2 Class 1 CIP connections (Exclusive owner (data) or listen-only). One connection per PLC. Listen-only connection requires a data connection to be established.
	Maximum Concurrent Explicit Messages (CIP Class 3)	6
	Class 1 Connection API	2…3200 ms
	Class 3 Connection API	100…10 000 ms
	Request Packet Interval (RPI)	20 ms default (2 ms minimum)

Approximate Dimensions

Dimensions in millimeters (inches). Dimensions are not intended to be used for manufacturing purposes. All dimensions are subject to change.

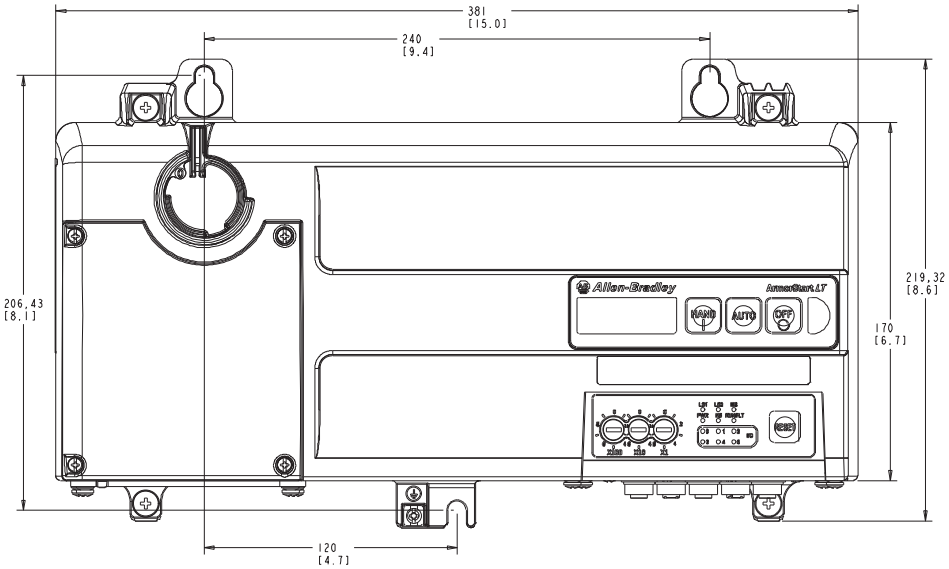

Front View

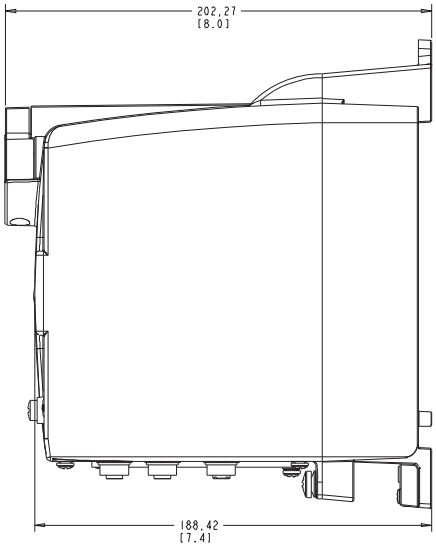

Right Side View

Accptable Mount Orientations

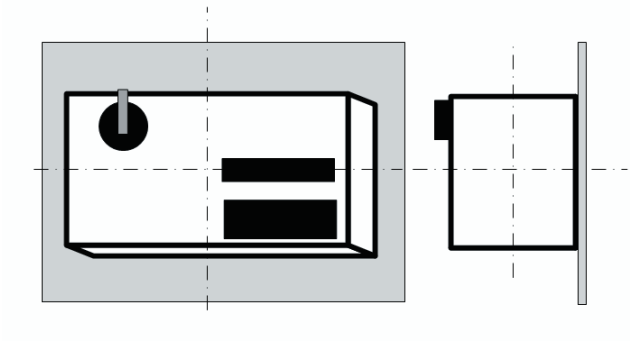

Important: For maximum product life and maximum heat sink efficiency, mount the device vertically as shown.

Dimensions in millimeters (inches). Dimensions are not intended to be used for manufacturing purposes. All dimensions are subject to change.

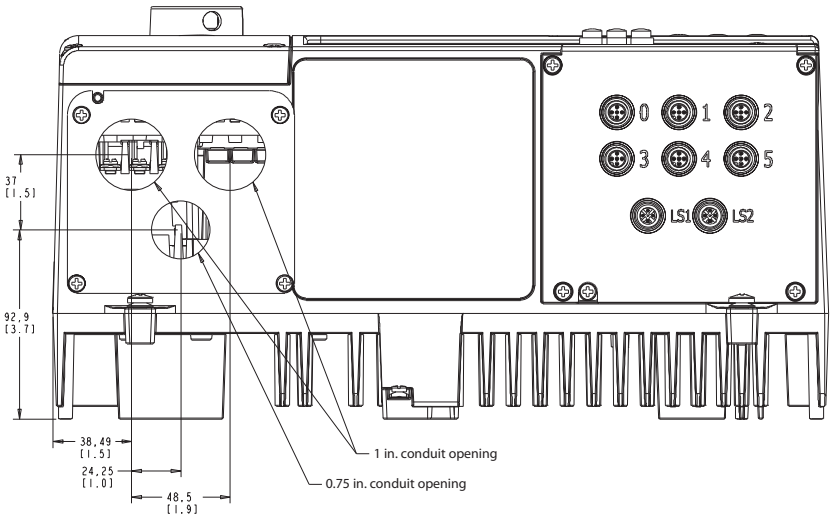

Conduit Gland Entrance - Bottom View

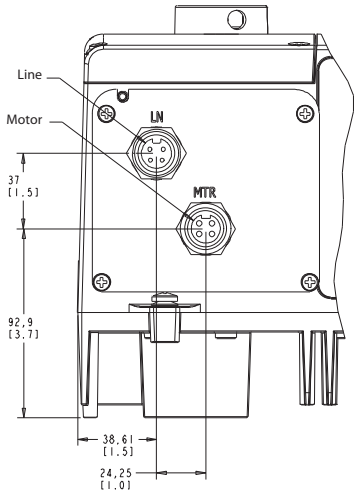

ArmorConnect Internal Power Supply Gland Plate (optional)

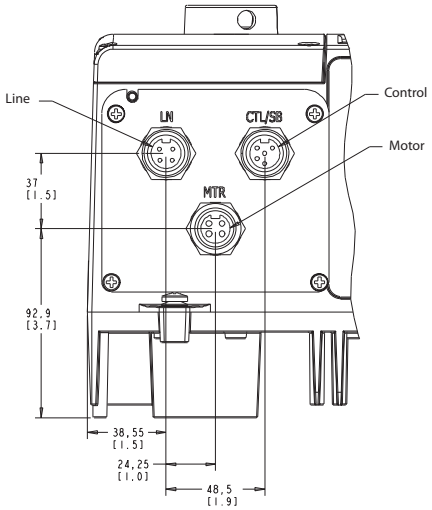

ArmorConnect Media Gland Entrance (optional)

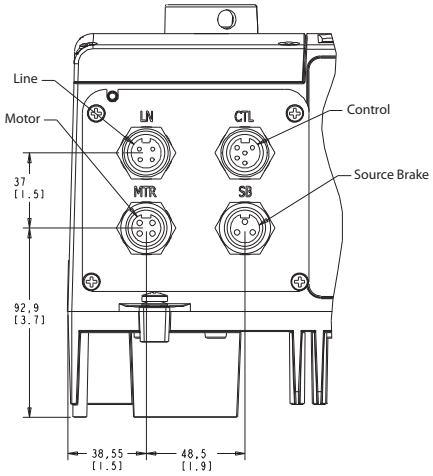

ArmorConnect Gland Entrance with Source Brake (optional)

ArmorStart LT Gland Plate

Dimensions are not intended to be used for manufacturing purposes. All dimensions are subject to change.

Refer to the handle and cord accessories for recommended fittings.

	G1 Conduit Standard U.S. Trade Knock-outs	G2 Media	G3 Conduit Daisy Chaining IP66 Metric Fittings	Cat. No.
No Internal Power Supply No Source Brake	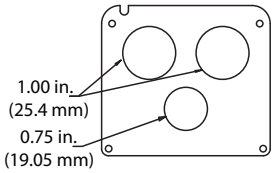	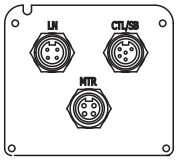	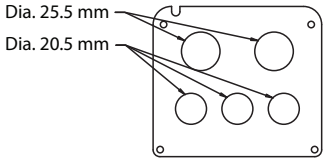	290-G3-A2
Source Brake No Internal Power Supply	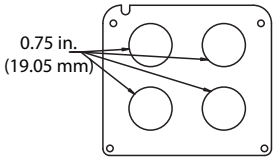	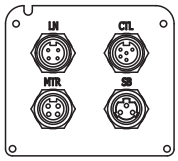	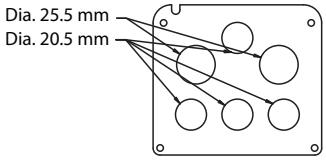	290-G3-A3
Internal Power Supply No Source Brake	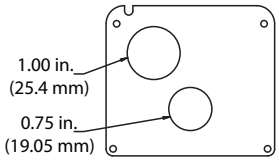	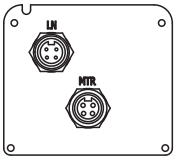	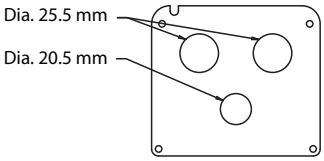	290-G3-A4
Internal Power Supply and Source Brake	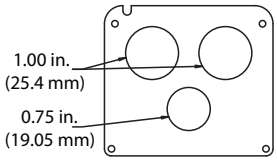	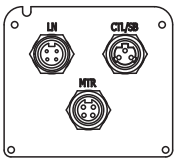	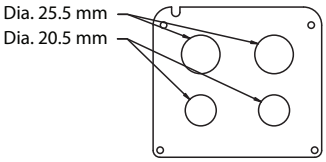	290-G3-A5
User Modified	Gland Plate Clearances Modifications are not permitted in the keepout region. Fitting(s) should be oriented so that they do not interfere with the enclosure when the gland plate is installed. Torque the gland mounting screws to 12…14 in•lb (1.3…1.6 N•m).		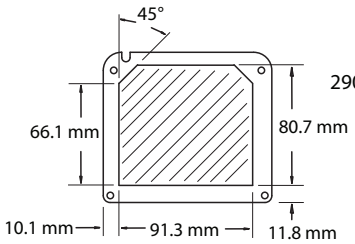	290-G3-A1

ArmorStart LT Receptacle Pin Outs

EtherNet, DeviceNet, and I/O Connections

EtherNet/IP Connector D-coded (M12)

Pin 1: Tx+
Pin 2: Rx+
Pin 3: Tx-
Pin 4: Rx-

I/O Connector (M12)

Pin 1: Sensor source voltage
Pin 2: Not used
Pin 3: Common
Pin 4: Input or Output
Pin 5: Not used

DeviceNet Connector (M18)

Pin 1: Drain (no connection)
Pin 2: +VDNET
Pin 3: -VDNET
Pin 4: CAN_H
Pin 5: CAN_L

Power Connections

ArmorStart LT utilizes an M22 male receptacle for power inputs and an M22 female receptacle for motor or motor brake output.

Motor Connector

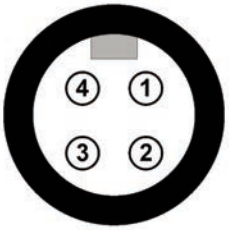

Pin 1: T1 (black)
Pin 2: T2 (white)
Pin 3: T3 (red)
Pin 4: Ground (green/yellow)

Source Brake Connector

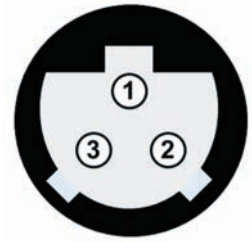

Pin 1: Ground (green/yellow)
Pin 2: B1 (black)
Pin 3: B2 (white)

Incoming Control Power— 24V DC only

Pin 1: (+V) Unswitched (A3)(red)
Pin 2: (-V) Common (A2)(black)
Pin 3: Not used (green)
Pin 4: Not used (blank)
Pin 5: (+V) Switched (A1)(blue)
Pin 6: Not used (white)

Incoming 3-phase Power

Pin 1: L1 (black)
Pin 2: L2 (white)
Pin 3: L3 (red)
Pin 4: Ground (green/yellow)

Power and Control Terminals

The maximum number of connections per terminal are shown below. All the terminals are found in the wiring area. Access can be gained by removing the terminal access cover plate.

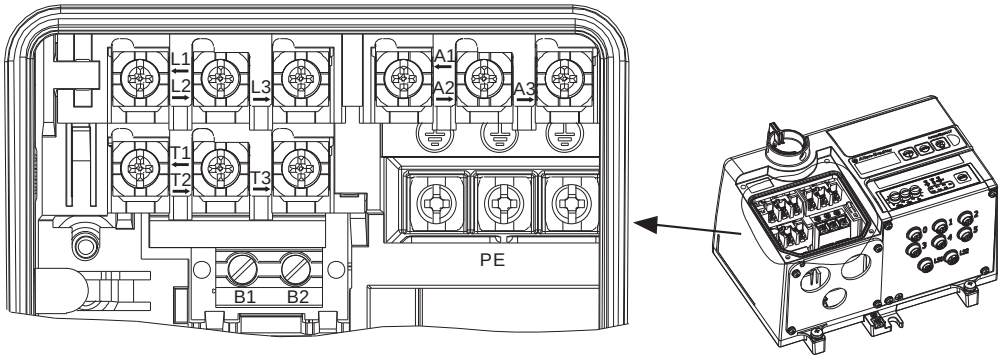

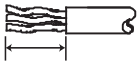

Wire Strip Length
0.35 ± 0.01 in.
(9 ± 0.2mm)

Terminal Designations	Wires/Connections	Description
A1 (+)	2	Switched 24V DC Control Power★
A2 (-)	2	Control Power Common★
A3 (+)	2	Unswitched 24V DC Control Power★
PE	2	Ground
1/L1	2	Line Power — Phase A
3/L2	2	Line Power — Phase B
5/L3	2	Line Power — Phase C
2/T1	1	Motor Connection — Phase A
4/T2	1	Motor Connection — Phase B
6/T3	1	Motor Connection — Phase C
B1	1	Source Brake Connection — B1‡
B2	1	Source Brake Connection — B2‡

★ When the internal power supply option is selected, no connection is made here.

‡ Available only with Bulletin 294E. The internal contactor, electromechanical motor brake, and associated motor branch cable are protected by the branch circuit protective device. There is no resettable or replaceable protective device in the product.

Switched and Unswitched Power

ArmorStart LT utilizes 24V DC control power for communications and I/O. The control power terminal connections are labeled A1, A2, and A3. Switched power (A1) will supply the outputs. Unswitched power (A3) will supply the logic power and sensor inputs. Unswitched power is required for the product to function.

Single External Power Supply for Switched and Unswitched Control Power Configuration

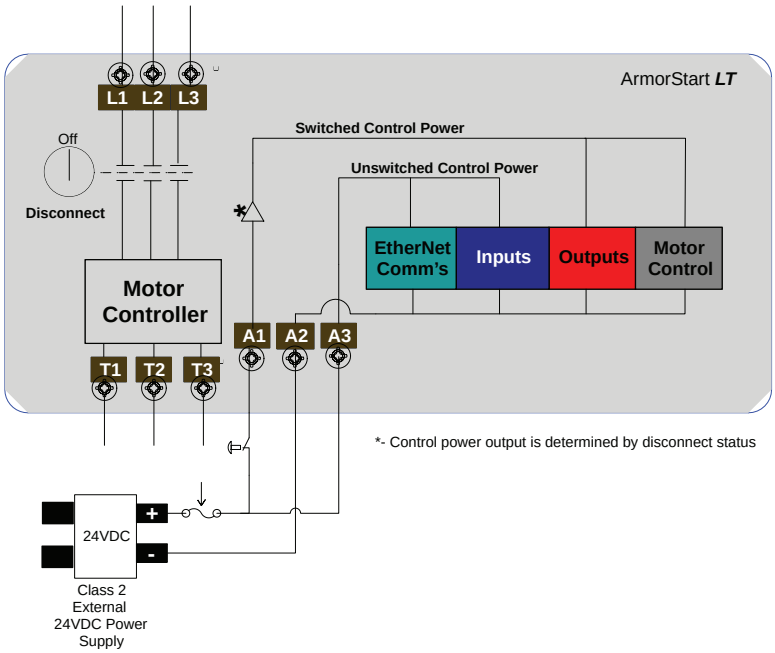

Two External Power Supplies for Switched and Unswitched Control Power Configuration

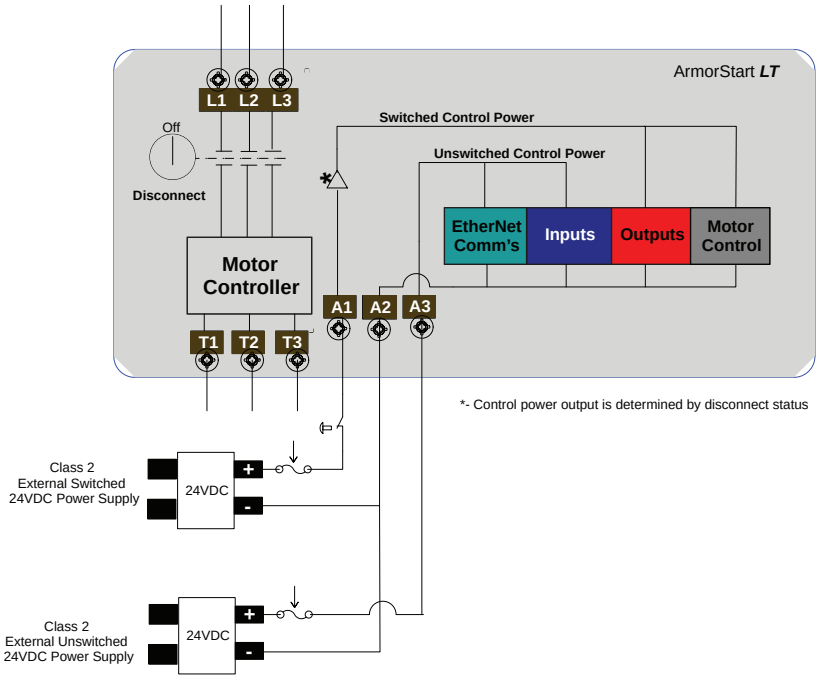

Internal Power Supply for Switched and Unswitched Control Power Configuration

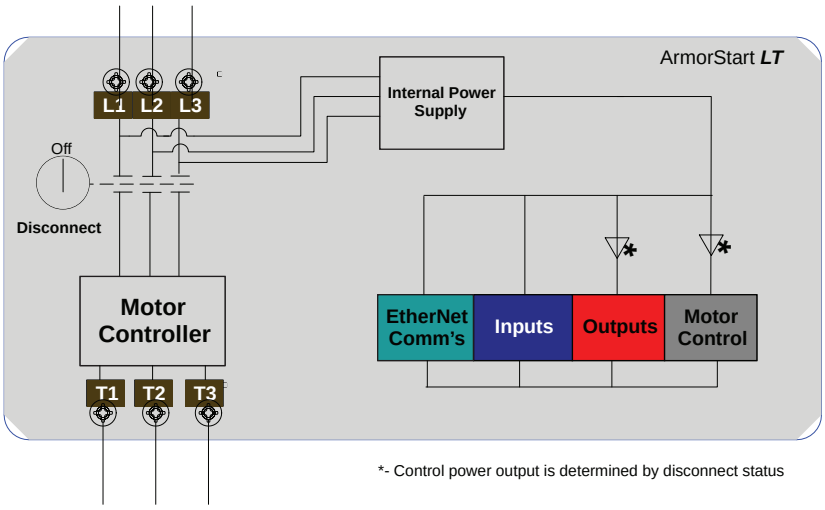

DeviceNet Media Δ

Description		Length [m (ft)]	Cat. No. Sealed
	KwikLink pigtail drops are Insulation Displacement Connector (IDC) with integral Class 1 round cables for interfacing devices or power supplies to flat cable	1 (3.3)	**1485P-P1E4-B1-N5**
		2 (6.5)	**1485P-P1E4-B2-N5**
		3 (9.8)	**1485P-P1E4-B3-N5**
		6 (19.8)	**1485P-P1E4-B6-N5**
	DeviceNet Mini- T-Port Tap	Left Keyway	**1485P-P1N5-MN5KM**
		Right Keyway	1485P-P1N5-MN5NF

Description		Connector	Cat. No.
	Gray PVC Thin Cable	Mini Straight Female Mini Straight Male	1485G-P‡N5-M5
		Mini Straight Female Mini Right Angle Male	1485G-P‡W5-N5
		Mini Right Angle Female Mini Straight Male	1485G-P‡M5-Z5
		Mini Right Angle Female Mini Straight Male	1485G-P‡W5-Z5
	Thick Cable	Mini Straight Female Mini Straight Male	1485C-P§N5-M5
		Mini Straight Female Mini Right Angle Male	1485C-P§W5-N5
		Mini Right Angle Female Mini Straight Male	1485C-P§M5-Z5
		Mini Right Angle Female Mini Straight Male	1485C-P§W5-Z5

Description		Length m (ft)	Cat. No.
	DeviceNet Configuration Terminal Used to interface with objects on a DeviceNet network. Includes 1 m communications cable.	1 (3.3)	**193-DNCT**
	Communication cable, color-coded bare leads	1 (3.3)	193-CB1
	Communication cable, microconnector (male)	1 (3.3)	**193-CM1**
	Panel Mount Adapter/Door Mount Bezel Kit	—	**193-DNCT-BZ1**

Δ See On-Machine Connectivity Catalog for complete cable selection information.
‡ Replace symbol with desired length in meters (Example: **1485G-P1N5-M5** for a 1 m cable). Standard cable lengths: 1, 2, 3, 4, 5, and 6 m.
§ Replace symbol with desired length in meters (Example: **1485C-P1N5-M5** for a 1 m cable). Standard cable lengths: 1, 2, 3, 4, 5, 6, 8, 10, 12, 18, 24, and 30 m.

Industrial EtherNet Media∆

Description	Connector Type	Unshielded Cat. No.
M12, D-Code Patchcords and Cordsets		
	Straight male to straight male	1585D-M4TBDM-★
	Straight male to right angle male	1585D-M4TBDE-★
	Right angle male to right angle male	1585D-E4TBDE-★
Transition Cable		
	Straight male to RJ45	1585D-M4TBJM-★
M12 to RJ45 Bulkhead Adapter		
	• Transition from IP20 environment to IP67 environment • In-cabinet connectivity with RJ45 connector providing On-Machine solution with M12 D Code connector • Differential 100 Ω terminators used for unused pairs • Cat 5e	**1585A-DD4JD**

★ Lengths available in 0.3, 0.6, 1, 2, 5, 10, 15, and additional increments of 5 m, up to 75 m.

Sensor Media∆

EtherNet/IP Communications					
Description		ArmorStart I/O Connection	Pin Count	Connector	Cat. No.
	DC Micro Patchcord	Input/Output	4-pin	Straight Female Straight Male	889D-F4ACDM-♦
				Straight Female Right Angle Male	889D-F4ACDE-♦

♦ Replace symbol with desired length in meters (Example: 889D-F4ACDM-1 for a 1 m cable). Standard cable lengths: 1, 2, 5, and 10 m.
∆ See On-Machine Connectivity Catalog for complete cable selection information.

Sealing Caps

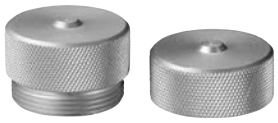

	Cat. No.
Plastic I/O Sealing Cap — M12 (1 each)♣	**1485A-M12**
Motor and Source Brake Connector — Aluminum Sealing Cap (1 each)	**1485A-C1**
Plastic Node Address Sealing Cap (10 each)♣	889A-PMCAP

♣ To achieve IP66/UL Type 4 rating, sealing caps must be installed on all unused connections.

Handle and Cord Accessories

	Description	Cat. No.
	Locking Tag • Padlock attachment to the lockable handles • Up to three padlocks 4…8 mm (5/16 in.) Ø shackle	**140M-C-M3**
	Recommended EMI/RFI Cord Grips★	
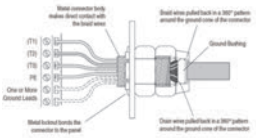	The cable connector selected must provide good 360° contact and low transfer impedance from the shield or armor of the cable to the conduit entry plate at both the motor and the drive or drive cabinet for electrical bonding.	Recommendation: SKINTOP® MS-SC/MS-SCL cable grounding connectors or NPT/PG adapters from LAPPUSA

Cord grip for Motor, Power, and Control
Recommended Thomas and Betts Cord Grips for G1 and G3 Glands.‡

Description	Gland	Knockout Size	Cable Diameter Range (in.^{2})	Thomas and Betts Part Nos.		
				Cord Grip	Sealing Ring	Lock Nut
Motor/Source Brake	G1	0.75 in.	0.500…0.750	2932NM	5263	142TB
Motor/Source Brake	G1	0.75 in.	0.660…0.780	2675	5263	142TB
Power	G1	1.0 in.	0.660…0.780	2676	5264	143
Power	G1	1.0 in.	0.770…0.895	2677	5264	143
Control Power, Motor/Source Brake	G3	M20	0.236…0.473	CC-ISO20-G	‡	GMN-M20
3-Phase Power	G3	M25	0.512…0.709	CC-ISO25-G	‡	GMN-M25

★ This is **required** in order to contain radiated electromagnetic emissions and to be CE compliant.
‡ Contact Thomas and Betts for additional details or alternative solutions.

Quick-Disconnect Motor Control Cables

Three-Phase Power Cordsets — M22, One-Piece Construction

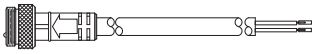

Example of Cordset

Pin Count	Assembly Rating‡	Certifications	Straight Male Cat. No.
4-pin	16 AWG, 600V, 10 A§	UL Listed UL 2237 (File No. E318496, Guide PVVA)	280-PWRM22G-M★
	14 AWG, 600V, 15 A		280-PWRM24G-M★

Three-Phase Shielded♦ Power Cordsets — M22, One-Piece Construction

Pin Count	Assembly Rating‡	Certifications	Straight Male Cat. No.
4-pin	16 AWG, 600V, 10 A§	UL 2237, UL Listed (File No. E318496, Guide PVVA)	284-PWRM22G-M★
	14 AWG, 600V, 15 A		284-PWRM24G-M★

Three-Phase Power Patchcords — M22, One-Piece Construction

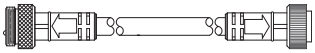

Example of Patchcord

Pin Count	Assembly Rating‡	Certifications	Straight Female Straight Male Cat. No.
4-pin	16 AWG, 600V, 10 A§	UL Listed UL 2237 (File No. E318496, Guide PVVA)	280-PWRM22A-M★
	14 AWG, 600V, 15 A		280-PWRM24A-M★
Male Receptacle (motor side)			
4-pin	16 AWG, 600V, 10 A§	UL Listed UL 2237 (File No. E318496, Guide PVVA)	**280-M22M-M1**
	14 AWG, 600V, 15 A		280-M24M-M1

Three-Phase Shielded♦ Power Patchcords — M22, One-Piece Construction

Pin Count	Assembly Rating	Certifications	Straight Female Straight Male Cat. No.
4-pin	16 AWG, 600V, 10 A§	UL 2237, UL Listed (File No. E318496, Guide PVVA)	284-PWRM22A-M★
	14 AWG, 600V, 15 A		284-PWRM24A-M★
Male Receptacle, Shielded (motor side)			
4-pin	14 AWG, 600V, 15 A	UL 2237, UL Listed (File No. E318496, Guide PVVA)	284-M24M-M05

‡ Refer to the Three-Phase Power Media selection guide for details and additional selections.
§ ArmorStart LT is UL Listed for use with 14 AWG power cable. Refer to your local electrical code(s) when applying 16 AWG power cable in a motor circuit.
♦ **Required** to meet CE compliance for radiated electromagnetic emissions.
★ Replace symbol with code from table below that represents length desired.

Feet	3.3	9.8	19.7	26.2	32.8	39.4	45.9
Meters	1	3	6	8	10	12	14
Code	1	3	6	8	10	12	14

Quick-Disconnect Motor Control Cables, Continued

Quick Disconnect Source Brake Cordsets — M22, One-Piece Construction

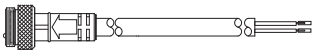

Example of Cordset

Pin Count	Assembly Rating	Certifications	Straight Male Cat. No.
3-pin	16 AWG, 600V, 10 A§	UL 2237, UL Listed (File No. E318496, Guide PVVA)	285-BRC22-M★
	14 AWG, 600V, 15 A		285-BRC24-M★

Quick Disconnect Source Brake Patchcords — M22, One-Piece Construction

Example of Patchcord

Pin Count	Assembly Rating	Certifications	Straight Female Straight Male Cat. No.
3-pin	16 AWG, 600V, 10 A§	UL 2237, UL Listed (File No. E318496, Guide PVVA)	285-BRC22-M★D
	14 AWG, 600V, 15 A		285-BRC24-M★D
Male Receptacle (motor side)			
3-pin	14 AWG, 600V, 15 A	UL 2237, UL Listed (File No. E318496, Guide PVVA)	285-M24M-M05

Three-Phase Power Field-Installable Receptacles — For 25, 15, and 10 A Cordsets and Patchcords

Pin Count	Assembly Rating‡	Certifications	Female Cat. No.
4-pin	16 AWG, 600V, 10 A§	UL Listed UL 2237 (File No. E318496, Guide PVVA)	280-FAM22F
	10 AWG, 600V, 25 A♠		280-FAM35F

‡ Refer to the Three-Phase Power Media Selection Guide for details.
§ ArmorStart LT is UL Listed for use with 14 AWG power cable. Refer to your local electrical code(s) when applying 16 AWG power cable in a motor circuit.
♠ For 15 A cable (e.g. Cat. No. 280-PWRM24*), use Cat. No. 280-FAM35F.
★ Replace symbol with code from table below that represents length desired.

Feet	3.3	9.8	19.7	26.2	32.8	39.4	45.9
Meters	1	3	6	8	10	12	14
Code	1	3	6	8	10	12	14

Three-Phase Power Media

	Three-Phase Power Trunk Cable	**Three-Phase Power Drop Cable**	**Three-Phase Power Tees and Reducers**	**Three-Phase Power Receptacles**	**Three-Phase Power Accessories**
Description	• Cordset - Cable with integral female or male connector on one end • PatchCord - Cable with integral female or male connector on each end	• Cordset - Cable with integral female or male connector on one end • PatchCord - Cable with integral female or male connector on each end	• Tee - Connects to a single drop line to trunk with M35 connectors • Reducing Tee - Connects to a single M22 drop line to trunk M35 connector • Reducer - Connects from M35 male connector to M22 female connector	• Female receptacles are a panel mount connector with flying leads • Male receptacles are a motor juction box mounted connector with flying leads • Field-installable receptacle for custom length cable	• Sealing Caps offered in versions to interface with female or male connectors • Locking Clips clamshell design clips over three power phase connector to limit customer access
Features	• Rated for Motor Branch Circuits - Meets UL 2237 for Industrial Machinery - 65 kA High fault rating (SCCR) - Rated for wash down environments • Straight or right angle connectors • 4-pin connector type • Cable rating: TC-ER/STOOW • Multiple standard lengths	• Rated for Motor Branch Circuits - Meets UL 2237 for Industrial Machinery - 65 kA High fault rating (SCCR) - Rated for wash down environments • Straight or right angle connectors • 4-pin connector type • Cable rating: TC-ER/STOOW • Multiple standard lengths	• Rated for Motor Branch Circuits - Meets UL 2237 for Industrial Machinery - 65 kA High fault rating (SCCR) - Rated for wash down environments • Trunk Tee, Reducing Tee and Reducer • 4-pin connector type	• Rated for Motor Branch Circuits - Meets UL 2237 for Industrial Machinery - 65 kA High fault rating (SCCR) - Rated for wash down environments • Male and female configurations • 4-pin connector type • 1/2 in. NPT • Available in 1 meter length	• Sealing Caps - Available in M35 and M22 styles • Locking Clips - Designed for M35 and M22 connectors
Rated Voltage	600V	600V	600V	600V	—
Connector Body Dimensions	• Straight: 88.9 mm x 38.6 mm • Right Angle: 75.5 mm x 74 mm	• Straight: 56. mm x 25.4 mm • Right Angle: 44.9 mm x 40.4 mm	• Trunk Tee: 108 mm x 73.6 mm • Reducing Tee: 108 mm x 65.5 mm • Reducer: 112.5 mm x 38.1 mm	• M22 Female: 33.45 mm x 25.45 mm • M22 Male: 28.04 mm x 25.45 mm • M35 Female: 71.12 mm x 38.10 mm • M35 Male: 63.50 mm x 38.10 mm	—
Product Selection	**Page 43**	**Page 44**	**Page 45**	**Page 47, 49**	**Page 55**

Control Power Media

	Control Power Cordsets & Patchcords	**Control Power T-ports**	**Control Power Receptacles**	**Control Power Shorting Plugs**	**Control Power Accessories**
Description	• Cable with integral connector on either one or both ends	• Cable with single male connector attached to two female connectors	• Panel mount connector with flying leads	• Integral connector with leads shorted for specific application requirements	• Sealing caps, mounting nuts, and sealing washers
Features	• 6-pin/5-used configuration • Male and female • Straight or right angle versions • 16 AWG conductors, cable dual rated UL TC/Open Wiring and STOOW • Multiple standard lengths	• 6-pin/5-used configuration • Compact design • Color-coded E-stop in and E-stop out configurations	• 6-pin/5-used configuration • Male and female • 16 AWG conductors • 1/2 NPT mounting threads • Multiple standard lengths	• 6-pin/5-used configuration • Male • Multiple versions color coded for simple identification	• Rugged durable construction • Designed to mate with control power media
Rated Voltage	600V	600V	600V	600V	—
Connector Body Dimensions	• Straight: 56 x 25 mm (2.2 x 1 in.) • Right Angle: 40 x 45 mm (1.6 x 1.8 in.)	72 x 64 mm (2.8 x 2.5 in.)	30 x 25 mm (1.2 x 1 in.)	56 x 25 mm (2.2 x 1 in.)	—
Product Selection	**Page 50**	**Page 51**	**Page 52**	**Page 53**	**Page 55**

Description

The power media offers both three-phase and control power cable systems of cordsets, patchcords, receptacles, tees, reducers and accessories, to be used with the ArmorStart Distributed Motor Controller. These cable system components allow quick connection of ArmorStart Distributed Motor Controllers, thereby reducing installation time. They provide for repeatable, reliable connection of the three-phase and control power to the ArmorStart Distributed Motor Controller and motor, by providing a plug and play environment that also avoids system mis-wiring.

Compared to the traditional conduit installations, with power media you profit and benefit from:

- Reduce commissioning time
- Plug and play design eliminates wiring errors
- Increased system design flexibility
- No special tools required
- Reduced labor costs

Three-Phase Power Media

The three-phase power media offers quick disconnect cables that provide a secure connection to the ArmorStart Distributed Motor Controller. The connectors can be straight or right angled and are physically keyed to prevent wiring mishaps. The cabling options include:

- **Cordsets:** Cable with integral male or female connector at one end and flying leads at the other
- **Patchcords:** Cable with integral connector at each end (one male, one female)

Available in 0.5, 1, 1.5, 2, 2.5, 3, 4, 6, 8, 10, 12, or 14 m lengths.

The three-phase power tee, reducing tee, and reducer offers flexibility in system design.

The receptacles provide a termination point at the panel and motor junction box. The female receptacles can be used for a panel mount connection. The male receptacles can be used for a quick disconnect at the motor junction box.

Field-installable receptacles allow for custom power cable lengths. This reduces the amount of excess cable and provides a neater appearance to machines. Selecting just a few cordsets provides the sufficient cable lengths needed to meet the required applications. This minimizes project costs and complexity by reducing the number of different part numbers that are necessary.

Three-phase power media components are rated for motor branch circuits per UL 2237.

Control Power Media

The control power media offers a mini disconnect cable that provides a secure connection to the ArmorStart Distributed Motor Controller. The control power media components are a 6-pin/5-used configuration to prevent mis-wiring with network connectors. The connectors can be straight or right angled and are physically keyed to prevent wiring mishaps. The cabling options include:

- **Cordsets:** Cable with integral male or female connector at one end and flying leads at the other
  Available in 2, 5, or 10 m lengths.
- **Patchcords:** Cable with integral connector at each end (one male, one female)
  Available in 1, 2, 3, 5, or 10 m lengths.

The control power tees offers flexibility in system design. The 6-pin/5-used T-port connects a single drop line to the trunk. Two types of tees are offered. The E-stop In tee is used to connect to the Bulletin 800F On-Machine E-Stop station using a control power media patchcord. The E-stop Out tee is used with cordset or patchcord to connect to the ArmorStart Distributed Motor Controller.

The receptacles provide a termination point at the panel and ArmorStart Distributed Motor Controller. The female receptacles can be used for a panel mount connection. The male receptacles can be used for a quick disconnect at the ArmorStart Distributed Motor Controller with gland plate design.

Note: Refer to your local electrical code for proper application and protection of long length power cable to minimize physical damage and appropriate short-circuit or ground-fault protection for the assembly. See application note 290-AP001 for additional information.

Three-Phase Power Media System Overview

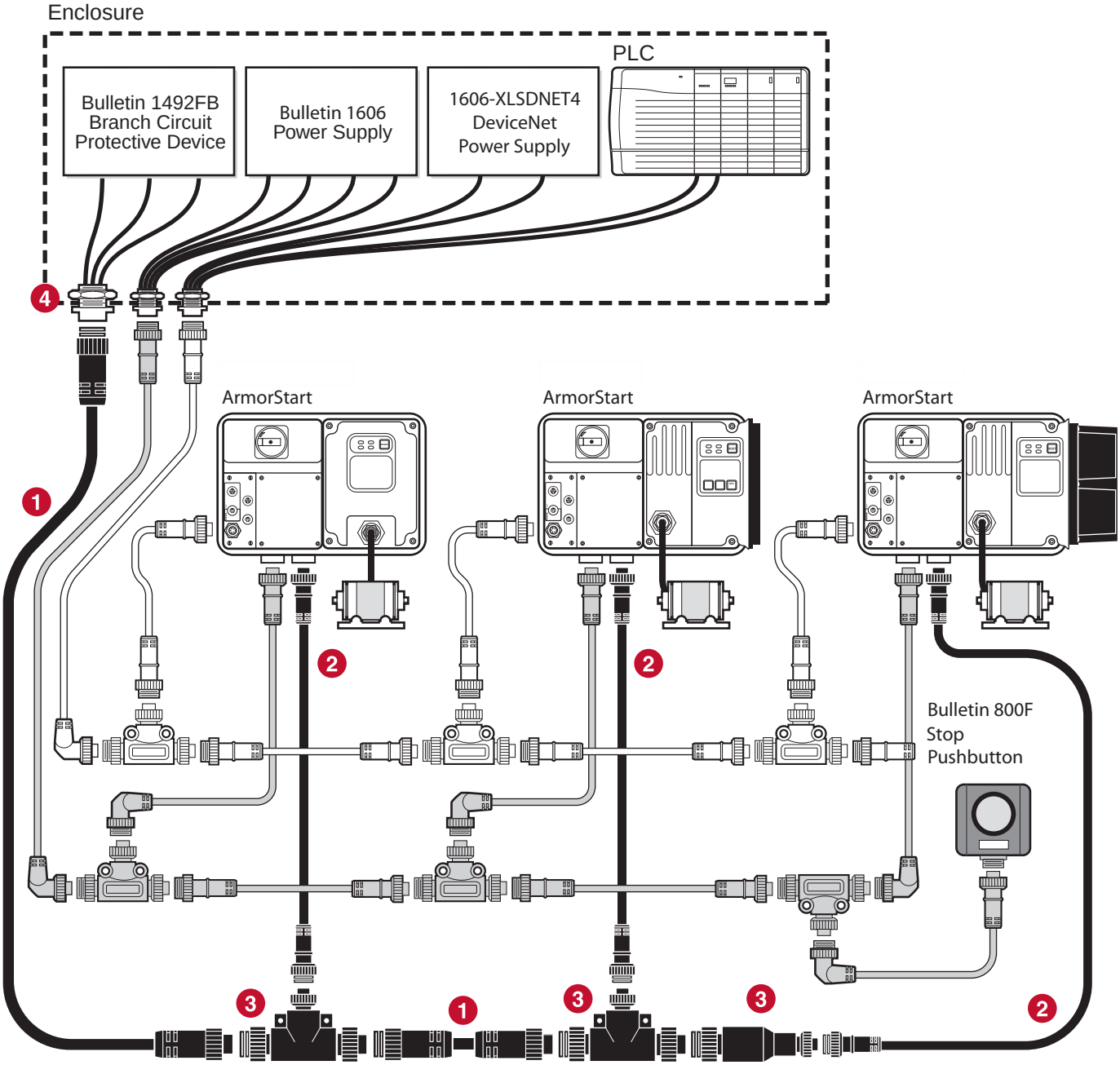

1. Three-Phase Power Trunk - Patchcord cable with integral female or male connector on each end (Example Cat. No.: 280-PWR35A-M*)
2. Three-Phase Drop Cable - PatchCord cable with integral female or male connector on each end (Example Cat. No.: 280-PWR22A-M*)
3. Three-Phase Power Tees and Reducer - Tee connects to a single drop line to trunk with quick change connectors (Cat. No.: 280-T35)
   Reducing Tee connects to a single drop line (Mini) to trunk (Quick change) connector (Cat. No.: 280-RT35)
   Reducer connects from quick change male connector to mini female connector(Cat. No.: 280-RA35)
4. Three-Phase Power Receptacles - Female receptacles are a panel mount connector with flying leads (Cat. No.: 280-M35F-M1)

Control Power Media System Overview

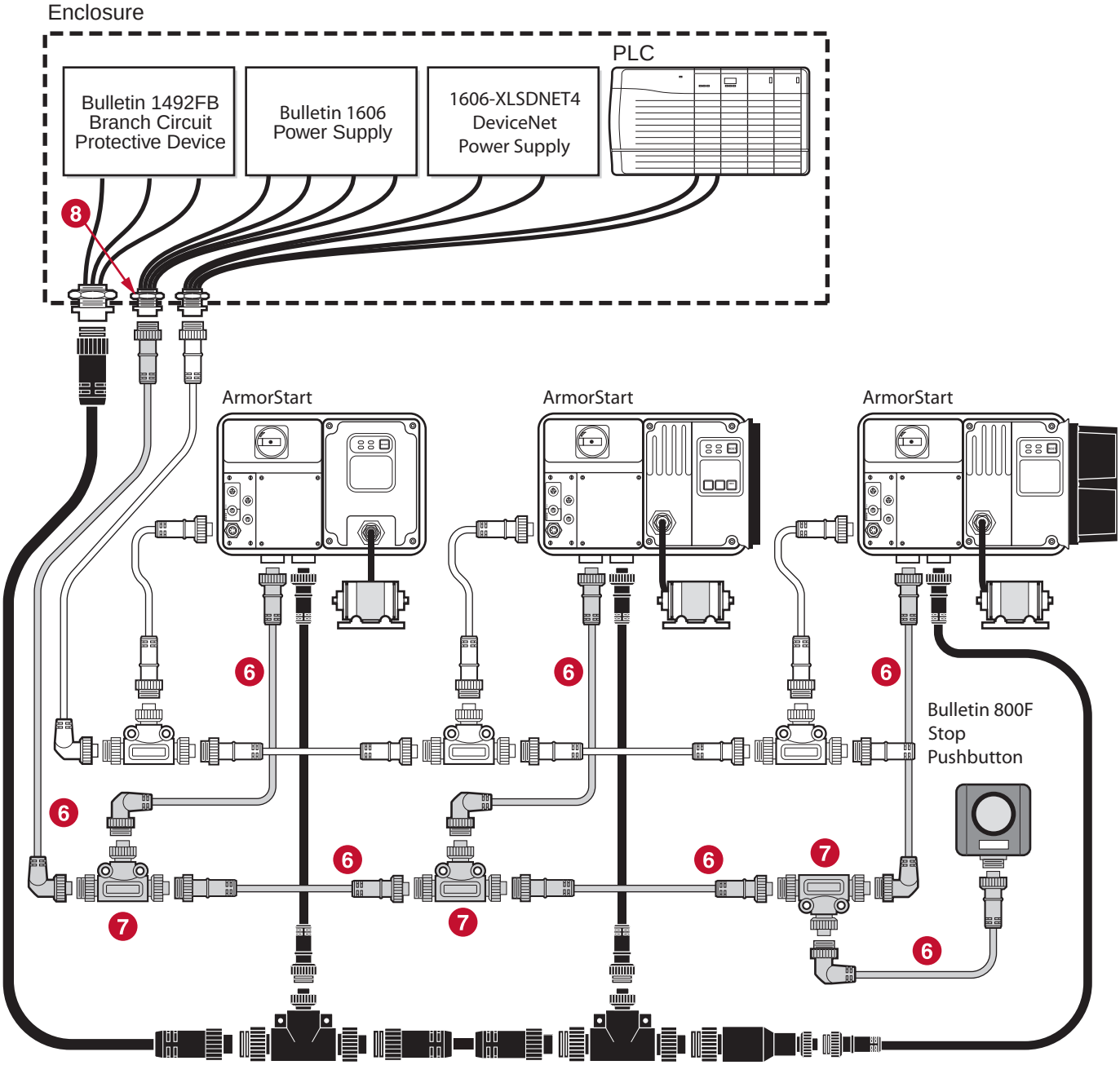

6. Control Power Media Patchcords - PatchCord cable with integral female or male connector on each end (Example Cat. No.: 889N-F65GFNM-*)
7. Control Power Tees - The E-stop In Tee (Cat. No.: 898N-653ST-NKF) is used to connect to the Bulletin 800F On-Machine E-Stop station using a control power media patchcord. The E-stop Out tee (Cat. No.: 898N-653ES-NKF) is used with cordset or patchcord to connect to the ArmorStart Distributed Motor Controller.
8. Control Power Receptacles - Female receptacles are a panel mount connector with flying leads (Cat. No.: 888N-D65AF1-*)

DeviceNet Media System Overview

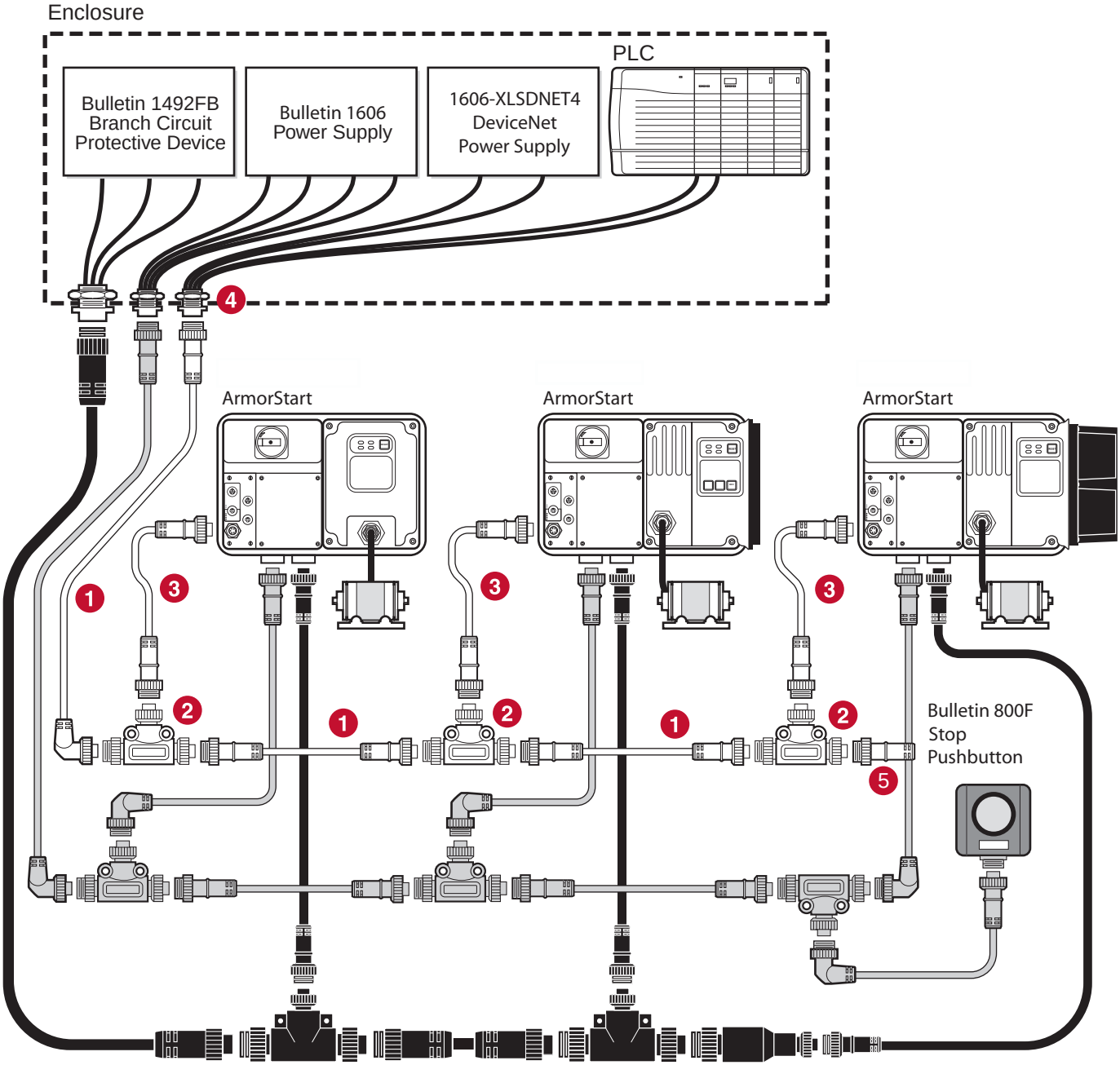

1. DeviceNet Trunk Cable - Patchcord trunk cable with integral female or male connector on each end (example 1485C-P*N5-M5)
2. DeviceNet Mini- T-Port Tap - T-ports are used for connecting drops to the trunk line (example 1485P-P1N5-MN5KM)
3. DeviceNet Drop Cable - Drop cables and patch cords are used to connect devices to the network (example 1485G-P*M5-Z5)
4. DeviceNet Receptacle - Recepatcles are used when connections present but required (example 1485A–CXN5–M5)
5. DeviceNet Terminator - Properly designed DeviceNet networks require terminating resistors (example 1485A–T1N5)

Note: See the On-Machine Connectivity catalog for specific DeviceNet media components.

EtherNet Power Media System Overview

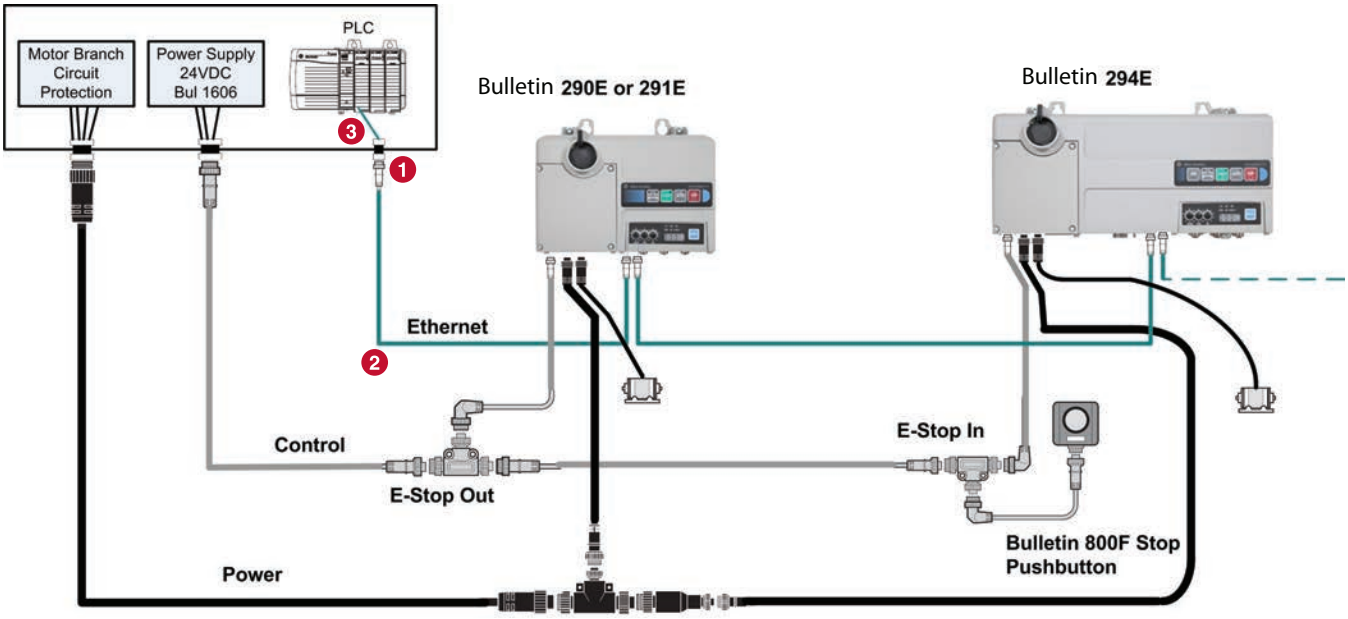

EtherNet Cat5e Connections:

1. CAT5e Bulkhead Connector and Receptacle (Example Cat. No.:1585A-DD4JD)
2. CAT5e Patch Cord, IP67, M12 D-Code, Male Straight, Male Right Angle (Example Cat. No.: 1585D-M4TBDE-*)
3. CAT5e, Patch Cable, IP20, RJ45 Male to RJ45 Male (Example Cat. No. 1585J-M4TB-*)

Note: See the On-Machine Connectivity catalog for specific EtherNet media components.

Bulletin 280 — Three-Phase Power Trunk Cables (Cordsets and Patchcords)

- Listed per UL 2237 for use in motor branch circuits per NFPA 79
- One piece molded design, M35 connection
- Can be used as a drop cable for ArmorStart Distributed Motor Controller or when desired to minimize voltage drops on extended cable runs

Table of Contents

Accessories..... 55

Standards Compliance

UL 2237

Certifications

UL Listed (File No. E318496, Guide PVVA)

Product Selection

Cordsets ‡

Pin Count	Assembly Rating	Cat. No.			
		Straight Female	Right-Angle Female	Straight Male	Right-Angle Male
4-pin	10 AWG, 600V, 25 A	280-PWRM35E-M★	280-PWRM35F-M★	280-PWRM35G-M★	280-PWRM35H-M★

Patchcords ‡

Pin Count	Assembly Rating	Cat. No.			
		Straight Female Straight Male	Right-Angle Female Straight Male	Straight Female Right-Angle Male	Right-Angle Female Right-Angle Male
4-pin	10 AWG, 600V, 25 A	280-PWRM35A-M★	280-PWRM35B-M★	280-PWRM35C-M★	280-PWRM35D-M★

‡ Stainless steel version may be ordered by adding **S** to the cat. no. (Example: Cat. No. 280**S**-PWRM35A-M*)

∗ Replace symbol with code from table below that represents length desired.

Feet	1.62	3.3	4.9	6.5	8.1	9.8	13.1	19.7	26.2	32.8	39.4	45.9
Meters	0.5	1	1.5	2	2.5	3	4	6	8	10	12	14
Code	05	1	015	2	025	3	4	6	8	10	12	14

Pinout and Color Code

	Face View Pinout	
	4-Pin	
	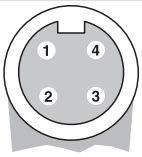 Female	Male
Color Code	1 Black 2 Green/Yellow Extended PIN	3 Red 4 White

Specifications

Mechanical	
Coupling Nut	Black anodized aluminum
Housing	Black PVC
Insert	Black PVC
Cable Diameter	0.775 in. +/- 0.12 in. (19.68 mm +/- 0.5 mm) with four 10 AWG conductors
Electrical	
Contacts	Copper alloy with gold over nickel plating
Cable	Black PVC, dual rated UL TC/Open Wiring and STOOW
Cable Rating	600V AC/DC
Assembly Rating	4-pin — 10 AWG, 600V @ 25 A
Short Circuit Current Rating (SCCR)	**Circuit Breaker:** Suitable for use on a circuit capable of delivering not more than 65 000 RMS symmetrical amperes at 480V AC maximum when protected by Bul. 140U-H frame circuit breaker, not rated more than 480V, 100 A and a maximum interrupting of 65 000 RMS symmetrical amperes. **Fusing:** Suitable for use on a circuit capable of delivering not more than 65 000 RMS symmetrical amperes at 600V AC maximum when protected by CC, J, and T class fuses.
Environmental	
Enclosure Rating	IP67, NEMA 4 & 6P; 1200 psi washdown
Operating Temperature	UL Type TC 600V 90 °C Dry 75 °C Wet, Exposed Run (ER) or MTW 600V 90 °C or STOOW 105 °C 600V - CSA STOOW 600V FT2

Approximate Dimensions

Dimensions in millimeters (inches). Dimensions are not intended to be used for manufacturing purposes and are subject to change.

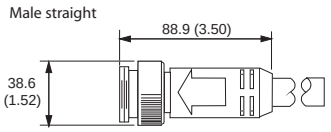

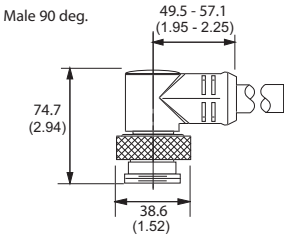

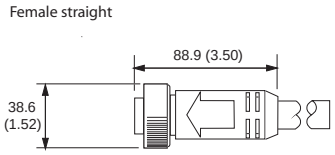

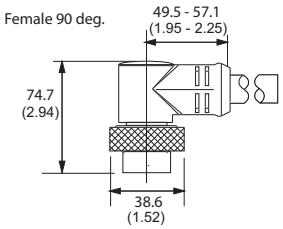

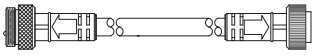

Example of Patchcord

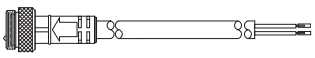

Example of Cordset

Three-Phase Power Media

Product Selection/Specifications/Approximate Dimensions

Bulletin 280 — Three-Phase Power Drop Cables (Cordsets and Patchcords)

- Listed per UL 2237 for use in motor branch circuits per NFPA 79
- One-piece molded design, M22 connection
- Can be used as a trunk cable for 10 A rated ArmorStart Distributed Motor Controller
- Can be used as a non-shielded motor cable

Table of Contents

Accessories..... 55

Standards Compliance

UL 2237

Certifications

UL Listed (File No. E318496, Guide PVVA)

Product Selection

Cordsets ‡

Pin Count	Assembly Rating	Cat. No.			
		Straight Female	Right-Angle Female	Straight Male	Right-Angle Male
4-pin	16 AWG, 600V, 10 A	280-PWRM22E-M∗	280-PWRM22F-M∗	280-PWRM22G-M∗	280-PWRM22H-M∗
4-pin	14 AWG, 600V, 15 A	280-PWRM24E-M∗	280-PWRM24F-M∗	280-PWRM24G-M∗	280-PWRM24H-M∗

Patchcords ‡

Pin Count	Assembly Rating	Cat. No.			
		Straight Female Straight Male	Right-Angle Female Straight Male	Straight Female Right-Angle Male	Right-Angle Female Right-Angle Male
4-pin	16 AWG, 600V, 10 A	280-PWRM22A-M★	280-PWRM22B-M★	280-PWRM22C-M★	280-PWRM22D-M★
4-pin	14 AWG, 600V, 15 A	280-PWRM24A-M★	280-PWRM24B-M★	280-PWRM24C-M★	280-PWRM24D-M★

‡ Stainless steel version may be ordered by adding **S** to the cat. no. (Example: Cat. No. 280**S**-PWRM22A-M*)

∗ Replace symbol with code from table below that represents length desired.

Feet	1.62	3.3	4.9	6.5	8.1	9.8	13.1	19.7	26.2	32.8	39.4	45.9
Meters	0.5	1	1.5	2	2.5	3	4	6	8	10	12	14
Code	05	1	015	2	025	3	4	6	8	10	12	14

Pinout and Color Code

	Face View Pinout	
	4-Pin	
	Female	Male
Color Code	1 Black 2 White	3 Red 4 Green/Yellow Extended PIN

Specifications

Mechanical	
Coupling Nut	Black anodized aluminum
Housing	Black PVC
Insert	Black PVC
Cable Diameter	0.43 in. +/- 0.12 in. (10.9 mm +/- 0.5 mm) with four 16 AWG conductors 0.58 in. +/- 0.12 in. (14.7 mm +/- 0.5 mm) with four 14 AWG conductors
Electrical	
Contacts	Brass with gold over nickel plating
Cable	Black PVC, dual rated UL TC/Open Wiring and STOOW
Cable Rating	600V AC/DC
Assembly Rating	4-pin — 16 AWG, 600V @ 10 A 4-pin — 14 AWG, 600V @ 15 A
Short Circuit Current Rating (SCCR)	**Fusing:** Suitable for use on a circuit capable of delivering not more than 65 000 RMS symmetrical amperes at 600V AC maximum when protected by CC, J, and T class fuses, rated 40 A non-time delay or 20 A time delay. **Circuit Breaker**: Suitable for use on a circuit capable of delivering not more than 45 000 RMS symmetrical amperes at 480Y/277V AC maximum when protected by Cat. No. 140U-D6D3-C30 circuit breaker, not rated more than 480Y/277V, 30 A, having an interrupting rating not less than 45 000 RMS symmetrical amperes, 480Y/277V maximum.
Environmental	
Enclosure Rating	IP67, NEMA 4 & 6P; 1200 psi washdown
Operating Temperature	UL Type TC 600V 90 °C Dry 75 °C Wet, Exposed Run (ER) or MTW 600V 90 °C or STOOW 105 °C 600V - CSA STOOW 600V FT2

Approximate Dimensions

Dimensions in millimeters (inches). Dimensions are not intended to be used for manufacturing purposes and are subject to change.

Female straight

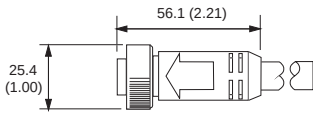

Male straight

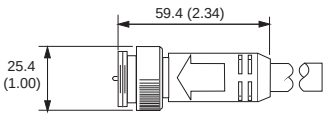

Female 90 deg.

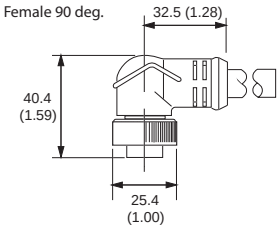

Male 90 deg.

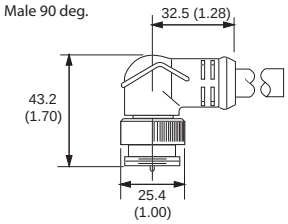

Bulletin 280 — Three-Phase Power Tees and Reducers (4-Pole)

- Listed per UL 2237 for use in motor branch circuits per NFPA 79
  - One-piece molded design
  - M35 power tee
  - M35 power tee with M22 reducing drop
  - M35 to M22 straight reducer
- 4-pin T-port connects a single drop line to the trunk
- 4-pin configuration

Table of Contents

Approximate Dimensions..... 46
Accessories..... 55

Standards Compliance

UL 2237

Certifications

UL Listed (File No. E318496, Guide PVVA)

Product Selection

Tees and Reducing Adapters ‡

Description	Assembly Rating	Color Code	Cat. No.
M35, 3-Phase Power Tee, 4-pole	25 A	A	**280-T35**
M35, 3-Phase Power Tee Reducing drop M22, 4-pole	Trunk 25 A/Drop 15 A	B	**280-RT35**
M35, 3-Phase Reducing Adapter, 4-pole	15 A	C	**280-RA35**

‡ Stainless steel version may be ordered by adding **S** to the cat. no. (Example: Cat. No. 280**S**-T35)

Specifications

Mechanical	
Coupling Nut	Black anodized aluminum (Trunk), black zinc diecast (Drop)
Housing	Black PVC
Insert	Black PVC
Electrical	
Contacts	Copper alloy with gold over nickel plating
Voltage	600V AC/DC
Assembly Rating	Trunk Tee: 25 A Reducing Tee: Trunk 25 A/Drop 15 A Reducer: 15 A
Short Circuit Current Rating (SCCR)	*Trunk Tee: 25 A* **Fusing**: Suitable for use on a circuit capable of delivering not more than 65 000 RMS symmetrical amperes at 600V AC maximum when protected by CC, J, and T class fuses. **Circuit Breaker**: Suitable for use on a circuit capable of delivering not more than 65 000 RMS symmetrical amperes at 480V AC maximum when protected by Bulletin 140U-H frame circuit breaker, not rated more than 480V, 100 A and a maximum interrupting of 65 000 RMS symmetrical amperes. *Reducing Tee 25 A/Drop 15 A and Reducer* **Fusing:** Suitable for use on a circuit capable of delivering not more than 65 000 RMS symmetrical amperes at 600V AC maximum when protected by CC, J, and T class fuses, rated 40 A non-time delay or 20 A time delay. **Circuit Breaker**: Suitable for use on a circuit capable of delivering not more than 45 000 RMS symmetrical amperes at 480Y/277V AC maximum when protected by Cat. No. 140U-D6D3-C30 circuit breaker, not rated more than 480Y/277V, 30 A, having an interrupting rating not less than 45 000 RMS symmetrical amperes, 480Y/277V maximum.
Environmental	
Enclosure Rating	IP67, NEMA 4 & 6P; 1200 psi washdown

Pinout and Color Code

Assembly Rating	Color Code	Face View Pinout — 4-Pin — M35 Connector	Face View Pinout — 4-Pin — M22 Connector
Trunk Tee: 25 A	A	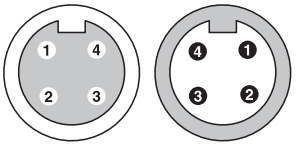 Female Male 1 Black 2 Green/Yellow Extended PIN 3 Red 4 White	—
Reducing Tee: Trunk 25 A/ Drop 15 A	B	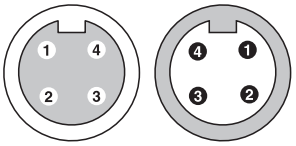 Female Male 1 Black 2 Green/Yellow Extended PIN 3 Red 4 White	 Female 1 Black 2 White 3 Red 4 Green/Yellow Extended PIN
Reducer: Trunk 25 A/ Drop 15 A	C	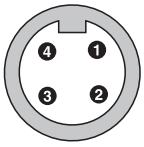 Male 1 Black 2 Green/Yellow Extended PIN 3 Red 4 White	 Female 1 Black 2 White 3 Red 4 Green/Yellow Extended PIN

Three-Phase Power Media

Approximate Dimensions/Wiring Diagrams

Dimensions in millimeters (inches). Dimensions are not intended to be used for manufacturing purposes and are subject to change.

Reducer

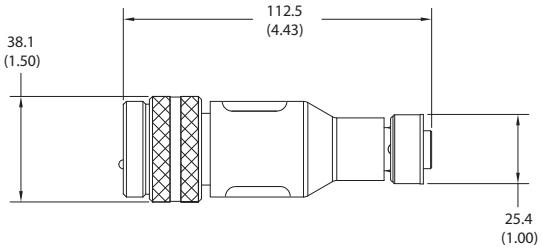

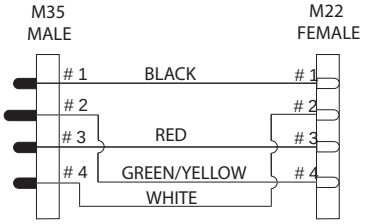

WIRING DIAGRAM

Power Tee

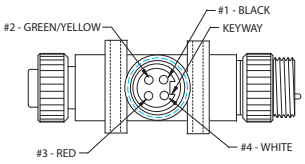

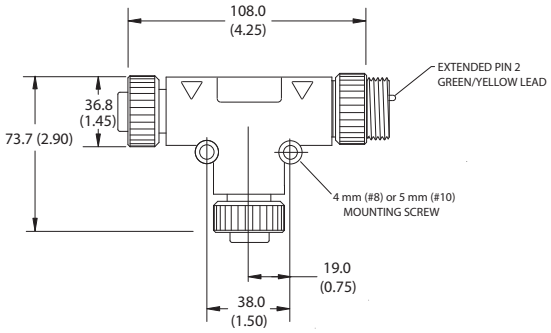

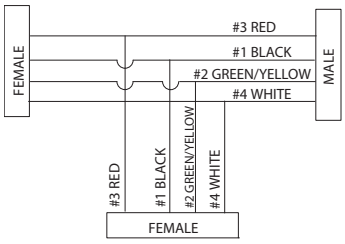

WIRING DIAGRAM

Power Tee - reducing drop

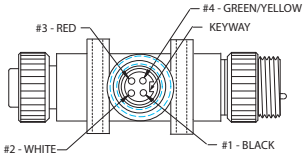

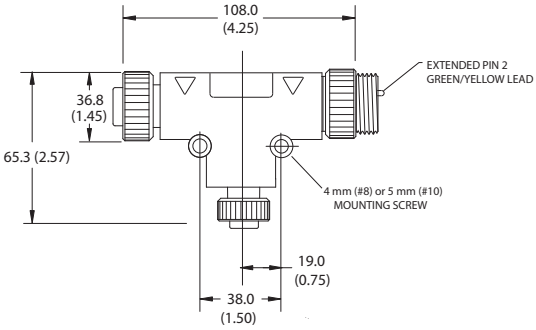

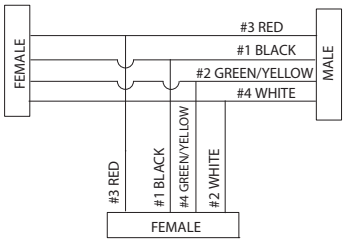

WIRING DIAGRAM

Bulletin 280 — Three-Phase Power Receptacles (Male and Female)

- Listed per UL 2237 for use in motor branch circuits per NFPA 79
- 16, 14, and 10 AWG conductors
- 4-pin configuration, M35 or M22 connection
- Female receptacles can be used for panel mount connection
- Male receptacles can be used for quick disconnect motor junction box
- 1/2 in.-14 NPT threads

Table of Contents

Approx. Dimensions . 48
Additional Accessories..... 55

Standards Compliance

UL 2237

Certifications

UL Listed (File No. E318496, Guide PVVA)

Product Selection

Receptacles ‡

Pin Count	Assembly Rating	Color Code	Cat. No.	
			Female	Male
4-pin	16 AWG, 600V, 10 A	A	**280-M22F-M★**	**280-M22M-M★**
	14 AWG, 600V, 15 A	A	280-M24F-M★	280-M24M-M★
	10 AWG, 600V, 25 A	B	**280-M35F-M★**	**280-M35M-M★**

‡ Stainless steel version may be ordered by adding **S** to the cat. no. (Example: Cat. No. 280**S**-M22F-M1)
★ Replace symbol with length in meters: 1 for 1 m or 3 for 3 m.

Accessories

Mounting Nuts and Flat Seals

Description	Pkg. Quantity	Cat. No.
Mounting nuts for 1/2 in.-14 NPT threaded receptacles	10	**889A-U1NUT-10**
Flat sealing washers for 1/2 in.-14 NPT threaded receptacles		**889A-U1FSL-10**

Specifications

Mechanical	
Insert	Black PVC
Receptacle Shell Material	Black anodized aluminum (female) and zinc diecast, black E-coat (male)
Electrical	
Contacts	Copper alloy with gold over nickel plating (Trunk), brass with gold over nickel plating (Drop)
Cable Rating	600V AC/DC
Assembly Rating	4-pin — 16 AWG, 600V @ 10 A 4-pin — 14 AWG, 600V @ 15 A 4-pin — 10 AWG, 600V @ 25 A
Short Circuit Current Rating (SCCR)	*4-pin — 10 AWG* **Fusing:** Suitable for use on a circuit capable of delivering not more than 65 000 RMS symmetrical amperes at 600V AC maximum when protected by CC, J, and T class fuses **Circuit Breaker:** Suitable for use on a circuit capable of delivering not more than 65 000 RMS symmetrical amperes at 480V AC maximum when protected by Bul. 140U-H frame circuit breaker, not rated more than 480V, 100 A and a maximum interrupting of 65 000 RMS symmetrical amperes. *4-pin — 16 or 14 AWG* **Fusing:** Suitable for use on a circuit capable of delivering not more than 65 000 RMS symmetrical amperes at 600V AC maximum when protected by CC, J, and T class fuses, rated 40 A non-time delay or 20 A time delay. **Circuit Breaker**: Suitable for use on a circuit capable of delivering not more than 45 000 RMS symmetrical amperes at 480Y/277V AC maximum when protected by Cat. No. 140U-D6D3-C30 circuit breaker, not rated more than 480Y/277V, 30 A, having an interrupting rating not less than 45 000 RMS symmetrical amperes, 480Y/277V maximum.
Environmental	
Enclosure Rating	IP67, NEMA 4 & 6P; 1200 psi washdown

Pinout and Color Code

Assembly Rating	Color Code	Face View Pinout 4-Pin M35 Connector Female	Face View Pinout 4-Pin M35 Connector Male	Face View Pinout 4-Pin M22 Connector Female	Face View Pinout 4-Pin M22 Connector Male
14 AWG, 600V, 15 A 16 AWG, 600V, 10 A	A	—		1 Black 2 White	3 Red 4 Green/Yellow Extended PIN
10 AWG, 600V, 25 A	B	1 Black 2 Green/Yellow Extended PIN	3 Red 4 White	—	

Dimensions in millimeters (inches). Dimensions are not intended to be used for manufacturing purposes and are subject to change.

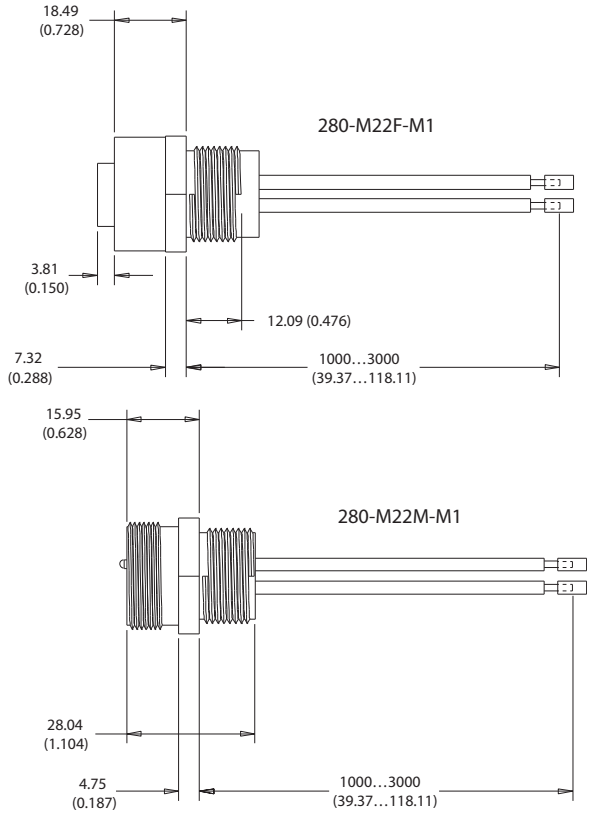

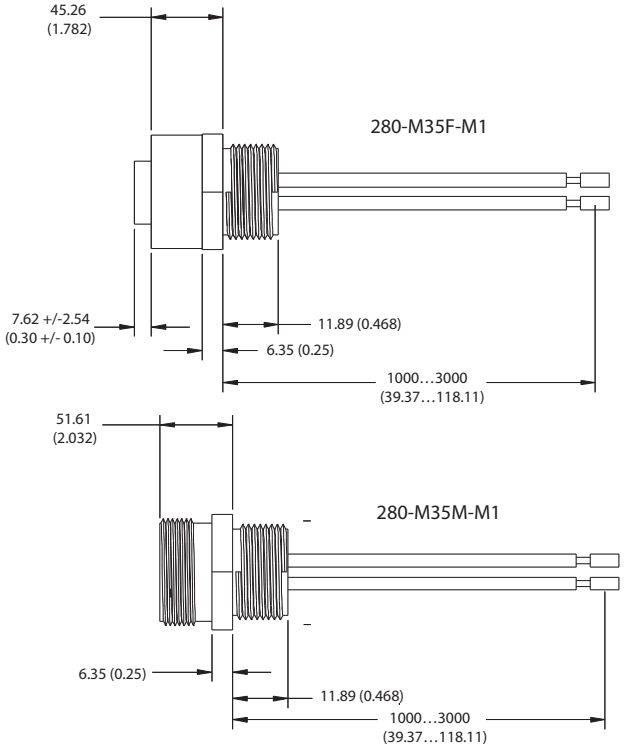

Bulletin 280 — Three-Phase Power Field-Installed Receptacles (Male and Female)

- Listed per UL 2237 for use in motor branch circuits per NFPA 79
- 16 to 10 AWG conductors
- 4-pin configuration, M35 or M22 connection
- Used to configure custom-length cordsets

Table of Contents

Approximate Dimensions..... 50
Accessories..... 55

Standards Compliance

UL 2237

Certifications

UL Listed (File No. E318496, Guide PVVA)

Product Selection

Receptacles

Pin Count	Assembly Rating	Certifications	Cable Diameter	Cat. No. Female	Cat. No. Male
4-pin	16 AWG, 600V, 10 A 14 AWG, 600V, 15 A	UL Listed UL 2237 (File No. E318496, Guide PVVA)	0.28…0.47 in.	280-FAM22F	280-FAM22M
	10 AWG, 600V, 25 A♦		0.48…0.81 in.	280-FAM35F	280-FAM35M

♦ For 15 A cable (Cat. No. 280-PWRM24*), use Cat. No. 280-FAM35*

Specifications

Mechanical		
Insert	Black PVC	
Receptacle Shell Material	Black anodized aluminum (female) and zinc diecast, black E-coat (male)	
Electrical		
Contacts	Copper alloy with gold over nickel plating (Trunk), brass with gold over nickel plating (Drop)	
Cable Rating	600V AC/DC: 14 AWG Listed TC, 16 AWG Listed TC-ER/STOOW, 10 AWG Listed TC-ER/STOOW	
Assembly Rating	**Note:** When applied with 14 AWG or larger wire, this is suitable for use on Motor Branch Circuits, per NFPA 79.	4-pin — 16 AWG, 600V @ 10 A 4-pin — 14 AWG, 600V @ 15 A 4-pin — 10 AWG, 600V @ 25 A
Short Circuit Current Rating (SCCR)	*4-pin — 10 AWG* **Fusing:** Suitable for use on a circuit capable of delivering not more than 65 000 RMS symmetrical amperes at 600V AC maximum when protected by CC, J, and T class fuses **Circuit Breaker:** Suitable for use on a circuit capable of delivering not more than 65 000 RMS symmetrical amperes at 480V AC maximum when protected by Bul. 140U-H frame circuit breaker, not rated more than 480V, 100 A and a maximum interrupting of 65 000 RMS symmetrical amperes. *4-pin — 16 and 14 AWG* **Fusing:** Suitable for use on a circuit capable of delivering not more than 65 000 RMS symmetrical amperes at 600V AC maximum when protected by CC, J, and T class fuses, rated 40 A non-time delay or 20 A time delay. **Circuit Breaker**: Suitable for use on a circuit capable of delivering not more than 45 000 RMS symmetrical amperes at 480V AC maximum when protected by Cat. No. 140U-D6D3-C30 circuit breaker, not rated more than 480Y/277V, 30 A, having an interrupting rating not less than 45 000 RMS symmetrical amperes, 480Y/277V maximum.	
Environmental		
Enclosure Rating	IP67, NEMA 4 & 6P; 1200 psi washdown	

Pinout and Color Code

	Face View Pinout — 4-Pin — M35 Connector		M22 Connector	
Assembly Rating	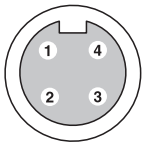 Female	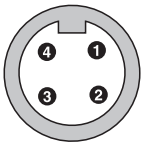 Male	Female	Male
16 AWG, 600V, 10 A 14 AWG, 600V, 15 A	—		1 Black 2 White	3 Red 4 Green/Yellow Extended PIN
10 AWG, 600V, 25 A	1 Black 2 Green/Yellow Extended PIN	3 Red 4 White	—	

M22, 16 AWG Field-Installed Receptacles

Cat. No. 280-FAM22F (Female)

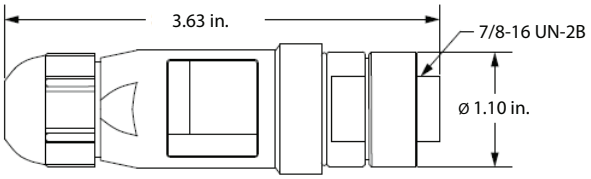

Cat. No. 280-FAM22M (Male)

M35, 10 AWG Field-Installed Receptacles

Cat. No. 280-FAM35F (Female)

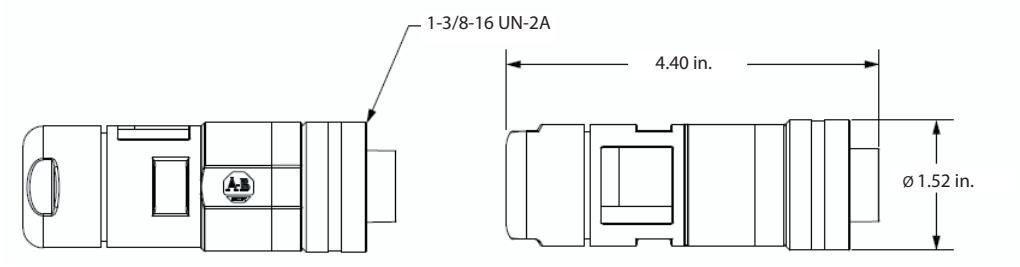

Cat. No. 280-FAM35M (Male)

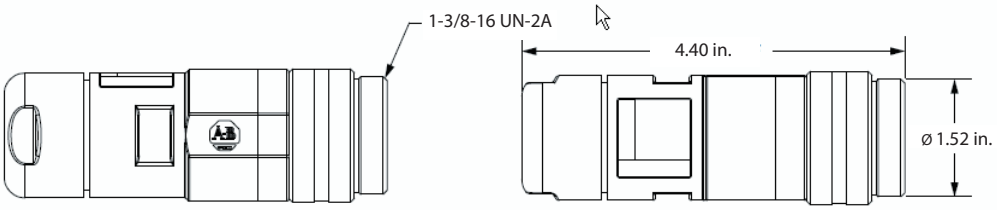

Bulletin 889N — Control Power Trunk and Drop Cables

- 6-pin/5-used configuration to prevent mis-wiring with network connectors
- One-piece molded design
- 16 AWG exposed run (TC-ER) rated cable

Table of Contents

Accessories..... 55

Product Selection

Cordsets

Pin Count	Assembly Rating	Cat. No.			
		Straight Female	Right-Angle Female	Straight Male	Right-Angle Male
6-pin/5 used	16 AWG 600V, 10 A	889N-F65GF-∗	889N-R65GF-∗	889N-M65GF-∗	889N-E65GF-∗

∗ Replace symbol with code from the table below that represents the desired length:

Feet	6.5	16.4	32.8
Meters	2	5	10
Code	2	5	10

Patchcords

Pin Count	Assembly Rating	Cat. No.			
		Straight Female Straight Male	Right-Angle Female Straight Male	Straight Female Right-Angle Male	Right-Angle Female Right-Angle Male
6-pin/5 used	16 AWG 600V, 10 A	889N-F65GFNM-❄	889N-R65GFNM-❄	889N-F65GFNE-❄	889N-R65GFNE-❄

❄ Replace symbol with code from the table below that represents the desired length:

Feet	3.3	6.5	9.8	16.4	32.8
Meters	1	2	3	5	10
Code	1	2	3	5	10

Specifications

Mechanical	
Coupling Nut	Black epoxy coated zinc
Overmold	Black Riteflex TPE
Insert	Yellow Riteflex TPE
Contacts	Brass/gold over palladium nickel
Cable	Grey PVC, 16 AWG, dual rated UL TC/Open Wiring and STOOW
Cable Diameter	0.44 in. +/- 0.12 in. (11.18 mm +/- 0.5 mm)
Electrical	
Cable Rating	UL Type TC 600V 90 °C Dry 75 °C Wet, Open Wiring or MTW 600V 90 °C or STOOW 105 °C 600V - CSA STOOW 600V FT2
Assembly Rating	600V, 10 A
Environmental	
Enclosure Type Rating	IP67, NEMA 6P, 1200 psi washdown
Operating Temperature	-20…+90 °C (-4…+194 °F)

Pinout and Color Code

	Face View Pinout	
	6-pin/5-used	
	Female	Male
Color Code	1 Red (+) 2 Black (-) 3 Green (GND)	4 Blank/Not Used 5 Blue (S1) 6 White (S2)

Approximate Dimensions

Dimensions in millimeters (inches). Dimensions are not intended to be used for manufacturing purposes and are subject to change.

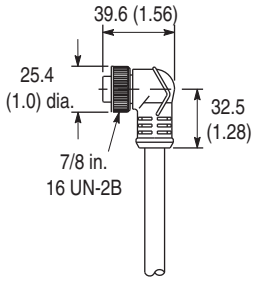

Female 90 Deg.

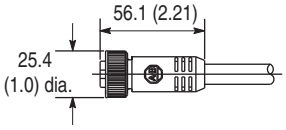

Female Straight

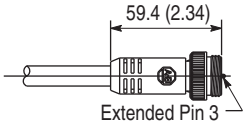

Male Straight

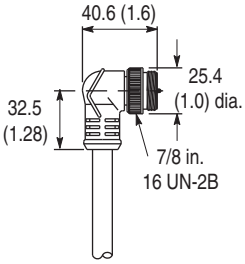

Male 90 Deg.

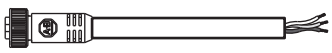

Example of Cordset

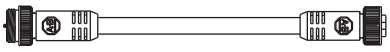

Example of Patchcord

Bulletin 898N — Control Power T-Ports

- 6-pin/5-used configuration to prevent mis-wiring with network connectors
- One piece molded design
- Durable compact design
- ArmorStart adapter T-Port for use with auxilary power media

Table of Contents

Accessories..... 55

Product Selection

T-Ports

Configuration	Assembly Rating	Overmold Color	Wiring Diagram	Cat. No.
E-stop out	600V, 10 A	Red	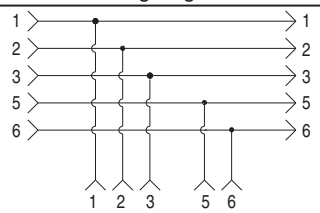	**898N-653ES-NKF**
E-stop in	600V, 10 A	Black	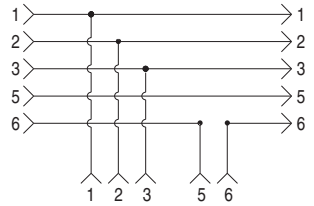	**898N-653ST-NKF**
ArmorStart auxiliary	600V, 8 A	Black	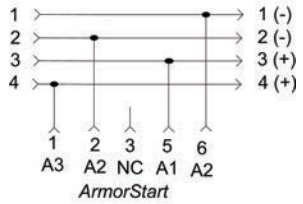	**898N-543ES-NKF★**

★ Refer to the On-Machine Connectivity catalog for media.

Specifications

Mechanical	
Coupling Nut	Black epoxy coated zinc
Housing	Riteflex TPE
Insert	Yellow Riteflex TPE
Contacts	Brass/gold over palladium nickel
Electrical	
Assembly Rating	600V, 10 or 8 A
Environmental	
Enclosure Type Rating	IP67, NEMA 6P, 1200 psi washdown
Operating Temperature	-20…+90 °C (-4…+194 °F)

Pinout and Color Code

	Face View Pinout	
	6-pin/5-used	4-pin/4-used
	Cat. No. 898N-653ES-NKF or 898N-653ST-NKF	Cat. No. 898N-543ES-NKF
	Female	Female
Color Code	1 Red 2 Black 3 Green 4 Blank/Not Used 5 Blue 6 White	1 White 2 Black 3 Blue 4 Red

Approximate Dimensions

Dimensions in millimeters (inches). Dimensions are not intended to be used for manufacturing purposes and are subject to change.

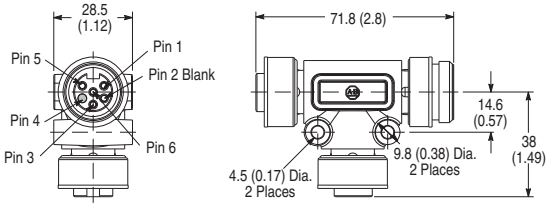

Cat. No. 898N-653ES-NKF or 898N-653ST-NKF

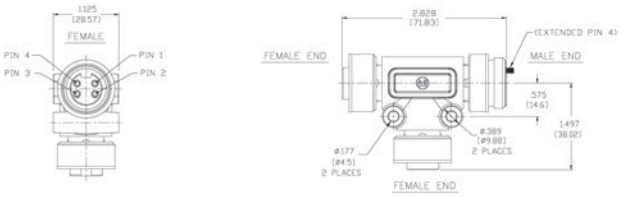

Cat. No. 898N-543ES-NKF

Bulletin 888N — Control Power Receptacles

- 6-pin/5-used configuration to prevent mis-wiring with network connectors
- 1/2 in. - 14 NPT threads

Table of Contents

Accessories..... 55

Product Selection

Receptacles

Pin Count	Assembly Rating	Cat. No.	
		Female	Male
6-pin/5 used	16 AWG 600V, 10 A	888N-D65AF1-∗	888N-M65AF1-∗

∗ Replace symbol with length in meters (0.3 or 1 standard)

Specifications

Mechanical	
Receptacle Shell	Male: Black epoxy coated zinc diecast Female: Black anodized aluminum
Insert	Yellow PVC
Contacts	Brass/gold over palladium nickel
Electrical	
Assembly Rating	600V, 10 A
Environmental	
Enclosure Type Rating	IP67, NEMA 6P, 1200 psi washdown
Operating Temperature	-20…+90 °C (-4…+194 °F)

Pinout and Color Code

	Face View Pinout	
	6-pin/5-used	
	Female	Male
Color Code	1 Red (+) 2 Black (-) 3 Green (GND)	4 Blank/Not Used 5 Blue (S1) 6 White (S2)

Approximate Dimensions

Dimensions in millimeters (inches). Dimensions are not intended to be used for manufacturing purposes and are subject to change.

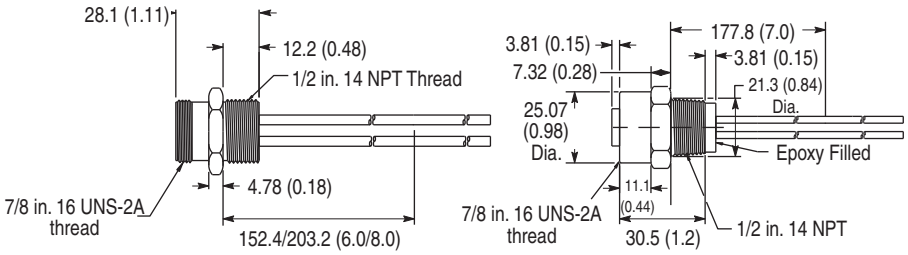

Bulletin 889A — Control Power Shorting Plugs

- 6-pin/5-used configuration to prevent mis-wiring with network connectors
- 1/2 in. - 14 NPT threads

Table of Contents

Accessories..... 55

Product Selection

Shorting Plugs

Configuration	Assembly Rating	Overmold Color	Wiring Diagram	Cat. No.
E-stop out	600V, 10 A	Red	1. 2. N/C 3. N/C 4. Blank 5. N/C 6.	**889A-M65SP61**
E-stop in	600V, 10 A	Black	1. N/C 2. N/C 3. N/C 4. Blank 5. 6.	**889A-M65SP65**

Specifications

Mechanical	
Coupling Nut	Black epoxy coated zinc
Overmold	Riteflex TPE
Insert	Yellow Riteflex TPE
Contacts	Brass/gold over palladium nickel
Electrical	
Assembly Rating	600V, 10 A
Environmental	
Enclosure Type Rating	IP67, NEMA 6P, 1200 psi washdown
Operating Temperature	-20…+90 °C (-4…+194 °F)

Pinout and Color Code

	Face View Pinout	
	6-pin/5-used	
	Female	Male
Color Code	1 Red (+) 2 Black (-) 3 Green (GND)	4 Blank/Not Used 5 Blue (S1) 6 White (S2)

Approximate Dimensions

Dimensions in millimeters (inches). Dimensions are not intended to be used for manufacturing purposes and are subject to change.

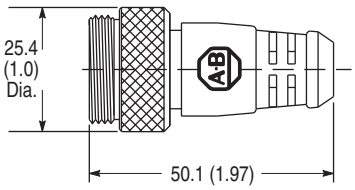

Locking Clips

Description	Material	Pkg. Quantity	Connector Style	Cat. No.
Clam shell design clips over the three-phase power media drop connection, to limit customer access.	ABS/PC plastics	10	M22 Connector	280-MTR22-LC
Clam shell design clips over the three-phase power media trunk connection, to limit customer access.			M35 Connector	280-MTR35-LC

Sealing Caps

Connector Style	Material	Enclosure Type Rating	Thread Configuration	Dimensions	Cat. No.
Control Power (M22)	Aluminum grey, anodized	IP20	External, male	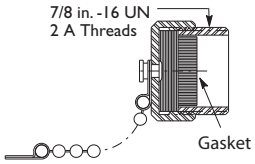	**1485A-C1**
		IP67, NEMA 4 & 6P: 1200 psi washdown	Internal, female	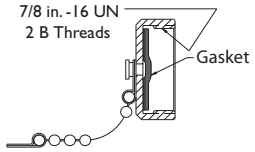	**889A-NCAP**
3-Phase Power (M35)			External, male	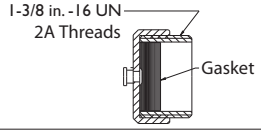	**889A-QMCAP**
			Internal, female	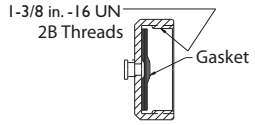	889A-QCAP

Mounting Nuts and Flat Seals

Description	Pkg. Quantity	Cat. No.
Mounting nuts for 1/2 in.-14 NPT threaded receptacles	10	**889A-U1NUT-10**
Flat sealing washers for 1/2 in.-14 NPT threaded receptacles		**889A-U1FSL-10**

On-Machine Stop Stations

Enclosure Type	Quick Connect	Knockout Type	Operator	Illumination Voltage	Contact Configuration	Cat. No.
Plastic	Mini Receptacle	Metric	Twist-to-Release 40 mm	24V AC/DC	1 N.O./1 N.C.	800F-1YMQ4
Metal						800F-1MYMQ4

Example Stop Circuit for DeviceNet Version

Pin 1	Red	No connection
Pin 2	Black	A2 (-)
Pin 3	Green	PE
Pin 4	Blank	Not used
Pin 5	Blue	A1 (+)
Pin 6	White	Not Used

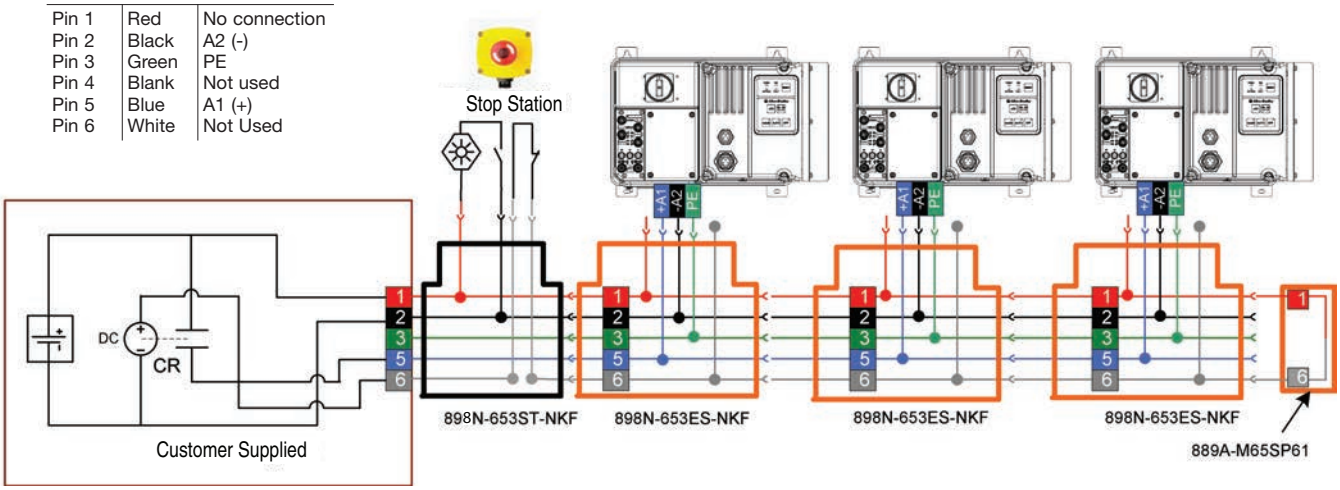

Example Stop Circuit for EtherNet/IP Version

Pin 1	Red	A3
Pin 2	Black	A2 (-)
Pin 3	Green	PE
Pin 4	Blank	Not used
Pin 5	Blue	A1 (+)
Pin 6	White	Not Used

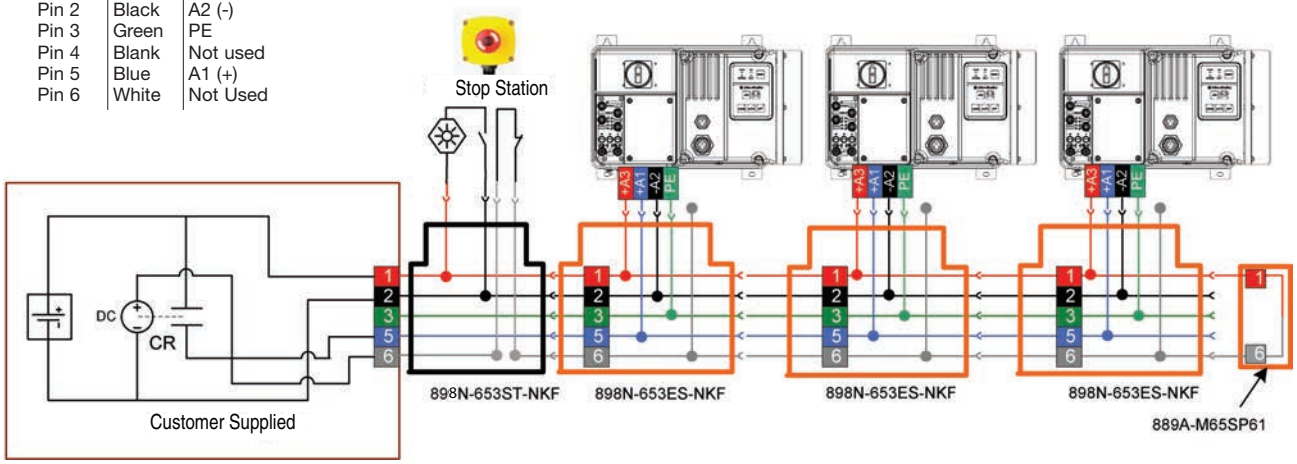

Rockwell Automation Support

Rockwell Automation provides technical information on the Web to assist you in using its products.
At http://www.rockwellautomation.com/support/, you can find technical manuals, a knowledge base of FAQs, technical and application notes, sample code and links to software service packs, and a MySupport feature that you can customize to make the best use of these tools.

For an additional level of technical phone support for installation, configuration, and troubleshooting, we offer TechConnect support programs. For more information, contact your local distributor or Rockwell Automation representative, or visit http://www.rockwellautomation.com/support/.

Installation Assistance

If you experience a problem within the first 24 hours of installation, review the information that is contained in this manual. You can contact Customer Support for initial help in getting your product up and running.

United States or Canada	1.440.646.3434
Outside United States or Canada	Use the Worldwide Locator at http://www.rockwellautomation.com/support/americas/phone_en.html, or contact your local Rockwell Automation representative.

New Product Satisfaction Return

Rockwell Automation tests all of its products to ensure that they are fully operational when shipped from the manufacturing facility. However, if your product is not functioning and needs to be returned, follow these procedures.

United States	Contact your distributor. You must provide a Customer Support case number (call the phone number above to obtain one) to your distributor to complete the return process.
Outside United States	Please contact your local Rockwell Automation representative for the return procedure.

Documentation Feedback

Your comments will help us serve your documentation needs better. If you have any suggestions on how to improve this document, complete this form, publication RA-DU002, available at http://www.rockwellautomation.com/literature/.

Trademark List

Allen-Bradley, ArmorConnect, ArmorStart LT, ControlLogix, CompactLogix, PowerFlex, RSLinx, StepLogic, DeviceLogix, On-Machine, RSNetWorx, and RSLogix 5000, are trademarks of Rockwell Automation, Inc. Trademarks not belonging to Rockwell Automation are property of their respective companies

Rockwell Otomasyon Ticaret A.Ş., Kar Plaza İş Merkezi E Blok Kat:6 34752 İçerenköy, İstanbul, Tel: +90 (216) 5698400

www.rockwellautomation.com

Power, Control and Information Solutions Headquarters

Americas: Rockwell Automation, 1201 South Second Street, Milwaukee, WI 53204-2496 USA, Tel: (1) 414.382.2000, Fax: (1) 414.382.4444
Europe/Middle East/Africa: Rockwell Automation NV, Pegasus Park, De Kleetlaan 12a, 1831 Diegem, Belgium, Tel: (32) 2 663 0600, Fax: (32) 2 663 0640
Asia Pacific: Rockwell Automation, Level 14, Core F, Cyberport 3, 100 Cyberport Road, Hong Kong, Tel: (852) 2887 4788, Fax: (852) 2508 1846

Publication 290-SG001C-EN-P - July 2012
Supercedes Publication 290-SG001B-EN-P — December 2011

Copyright © 2012 Rockwell Automation, Inc. All rights reserved. Printed in the U.S.A.