Technical Data
Original Instructions

Allen-Bradley

1321 Power Conditioning Products

Don't Ignore the Cost of Power Line Disturbance

Topic	Page
Additional Resources	2
Summary of Changes	2
Product Overview	2
1321-3R, 1321-3RA, and 1321-3RB Series Line Reactors	3
1321 Reflective Wave Reduction (RWR) Devices	13
1321-3TH/3TW Series Three-Phase Isolation Transformers	17
1321-Mxxx Common Mode Chokes	22
1321-DC DC Link Chokes	26

LISTEN.
THINK.
SOLVE.®

Allen-Bradley • Rockwell Software

Rockwell Automation

Additional Resources

These documents contain additional information concerning related products from Rockwell Automation®.

Resource	Description
Wiring and Grounding Guidelines for Pulse Width Modulated (PWM) AC Drives, publication DRIVES-IN001	Basic information that is needed to properly wire and ground PWM AC drives.
Safety Guidelines for the Application, Installation, and Maintenance of Solid-State Control, publication SGI-1.1	General guidelines for the application, installation, and maintenance of solid-state control.

You can view or download publications at rok.auto/literature.

For Allen-Bradley® Drives Technical Support:

Title	Online at…
Allen-Bradley Drives Technical Support	rok.auto/support or call (1) 262.512.8176

Summary of Changes

This publication contains the following new or updated information. This list includes substantive updates only and is not intended to reflect all changes.

Topic	Page
Added Storage Guidelines	5

Product Overview

Allen-Bradley reactors help keep equipment running longer by absorbing many of the power line disturbances that can shut down your drive. Allen-Bradley isolation transformers can provide both voltage change and isolation for your variable speed drive. These designs are harmonic compensated and IGBT protected to help assure optimum performance in the presence of harmonics.

1321-3R, 1321-3RA, and 1321-3RB Series Line Reactors

Applying Allen-Bradley Line Reactors

At the Input of the Drive

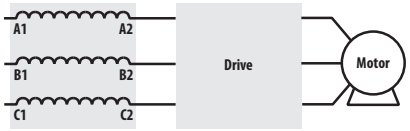

At the input of a drive, a line reactor helps protect against surges or spikes on the incoming power lines and help reduce harmonic distortion.

- Eliminate spurious tripping
- Extend semiconductor life
- Reduce harmonic distortion
- Improve true power factor
- Reduce voltage notching
- Meet IEEE-519 or EN-61800

At the Output of the Drive

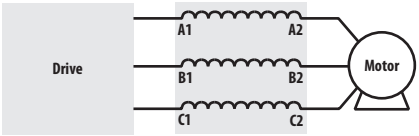

In long motor lead applications, Allen-Bradley load reactors that are located between the drive and motor help reduce dv/dt and motor terminal peak voltages. The use of a load reactor also helps protect the drive from surge currents that are caused by rapid changes in the load.

- Protect motors from long lead effects
- Reduce output voltage dv/dt
- Extend semiconductor life
- Reduce surge currents
- Reduce motor temperature
- Reduce audible motor noise

With Multiple Drives

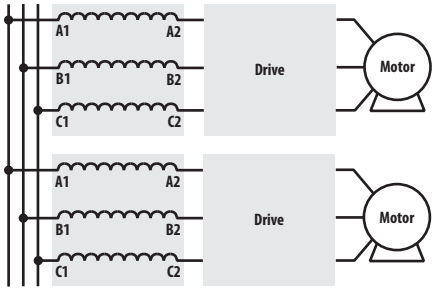

Multiple drives on a common power line should each have their own line reactor. Individual line reactors provide filtering between each drive to help reduce any crosstalk while providing optimum surge protection for each drive.

With Multiple Motors

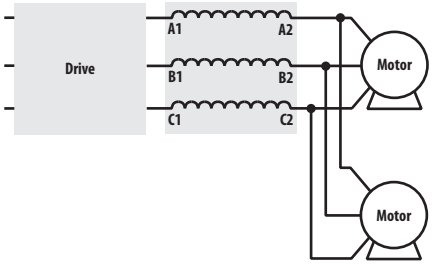

When multiple motors are controlled by one drive, a line reactor can typically be used between the drive and all of the motors. Size the line reactor based on the total motor/load horsepower.

With Single-Phase Input

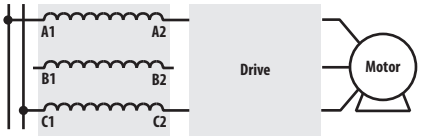

A three-phase reactor can be used for single-phase applications by routing each of the two input power conductors to the outside two coils, and leaving the center coil disconnected. The sum of the inductance of the two coils is the total inductance that is applied to the circuit. Contact Rockwell Automation Technical Support for assistance in specifying the proper reactor.

Selecting the Correct Impedance Rating

Why is the Right Impedance Rating Important?

Selecting the correct impedance rating is critical for your job. An impedance value that is too low may not limit peak current. An impedance value that is too high may reduce input voltage. Allen-Bradley line reactors offer two impedance ratings.

3% Impedance Rated Reactors to Reduce Spurious Trips

Allen-Bradley line reactors that are rated at 3% are typically sufficient to absorb line spikes and motor current surges and will help prevent spurious tripping of drive and circuit breakers in most applications.

5% Impedance Rated Reactors to Reduce Harmonic Content

Allen-Bradley reactors that are rated at 5% are best for reducing harmonic current and frequencies. These line reactors help comply with IEEE-519 (not normally used as load reactors).

Voltage Spike Protection

Voltage spikes on AC power lines can cause elevation of the DC bus voltage, which may cause the drive to trip on an overvoltage condition.

3% impedance reactors are effective at helping to protect drives against voltage spikes and spurious tripping. Allen-Bradley line reactors absorb these line spikes which help protect the drive from spurious tripping and damage.

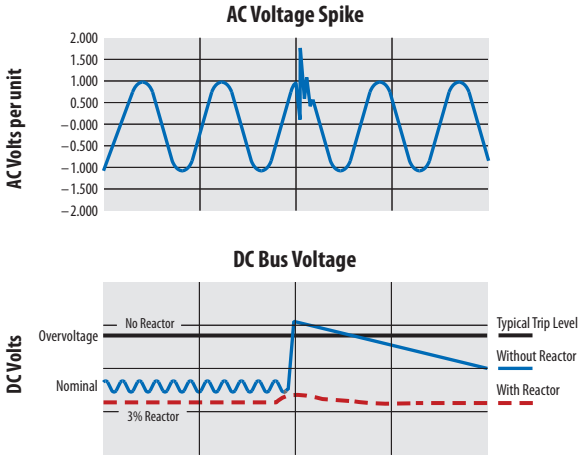

Motor Protection

Allen-Bradley load reactors can help protect motors from high peak voltages.

For IGBT drive applications with long drive-to-motor lead lengths, Allen-Bradley load reactors can help protect against fast dv/dt rise times.

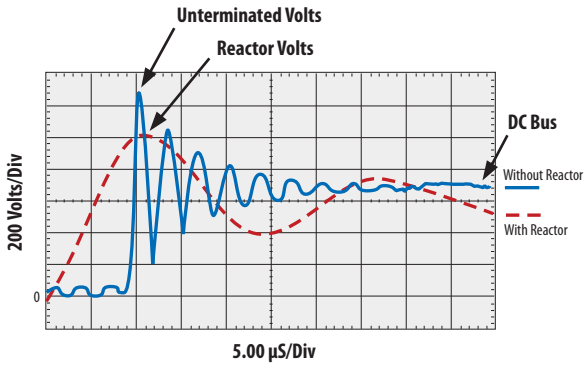

Storage Guidelines

1321 Line Reactor products that are not installed and energized immediately should follow the storage guidelines. Following these guidelines will help reduce the appearance of oxidation from forming on the laminate surface and edges.

- Do not remove the protective packaging.
- Do not store the product outdoors or in an unprotected area.
- Do not store the product in an area where it is exposed to a corrosive atmosphere.
- Do not store the product where condensation could occur.
- Store the product in a climate-controlled building with adequate air circulation.
- Store the product in a clean, dust free, and dry atmosphere.
- Maintain a relative humidity level of less than 60% non-condensing.
- Limit rate of relative humidity change to less than 10% per hour.
- Store products on a vapor barrier membrane to help prevent water vapor migration.

ATTENTION: The presence of oxidation does not indicate performance issues.

Catalog Number Explanation

Position Number

1-4		6	7	8		10
1321	–	3	R	4	–	B
a		b	c	d		e

a

Product	
Code	Type
1321	1321 Power Component

b

Phases	
Code	Description
3	Three-Phase

c

Device	
Code	Description
R, RB	Reactor, Open
RA/RAB (1)	Reactor, NEMA 1

(1) RAB is only available in cabinet style 2 or 3.

d

Fundamental Amps	
Code	Amps
1	1
2	2
4	4
8	8
12	12
18	18
25	25
35	35
45	45
55	55
80	80
100	100
130	130
160	160
200	200
250	250
320	320
400	400
500	500
600	600
750	750
850	850
1000	1000

e

Inductance Rating	
Code	Description
A	Each reactor current rating has four inductance ratings also available. See the IP00 dimension table.
B	
C	
D	

Common Specifications

Specification		Rating
Material	Enclosures	IP11 (NEMA/UL Type 1) – Sheet steel in accordance with UL, NEMA requirements
		IP66 (Open) or IP20 (Open – with finger-safe terminals)
	Terminations [1]	1…45 amp (fundamental) Ratings – Finger guard IP20 terminal block
		55…160 amp (fundamental) Ratings – Solid copper box lugs
		160…400 amp (fundamental) Ratings – Copper tab terminals [2]
		401 amps and above – Copper tab terminals [2]
Harmonic Compensation	All line reactors are compensated for the additional currents and high frequencies that are caused by the presence of harmonics	
General Protection	Impedance	1.5%, 3%, or 5% based on the fundamental current ratings
	Overload Rating	200% of fundamental current for 30 minutes 300% of fundamental current for 1 minute
	dv/dt Protection	Meets NEMA MG-1, part 31
Electrical	Maximum Rated Voltage	600V AC (units with terminal blocks) 690V AC (units with box lugs or tab terminals)
	Maximum Switching Freq.	20 kHz
	Fundamental Frequency	Line/Load - 50/60 Hz
	Temperature Rise	135 °C average
	Dielectric Strength	3000 Volts rms (4243 volts peaks)
	Inductance Curve (Typical)	100% at 100% current 100% at 150% current 50% at 350% current (minimum)
	Inductance Tolerance	±10%
	Insulation System	Class N (200 °C)
	Impregnation	High bond strength solventless epoxy, 200 °C, UL94HB recognized
Environmental	Ambient Temperature	50 °C Open Style Reactor (maximum) 40 °C Enclosed Style Reactor (maximum)
	Altitude	1000 meters (3280 feet)
	Storage Temperature (all const.)	-40…+70°C (-40…+158°F)
	Humidity	5…95% noncondensing
Agency Approvals	cULus UL 508 CSA C22.2 Class N200C	File E196302 Component Listed (1…2400 amps) File E196302 UL Listed NEMA Type 1 units (1…2400 amps) Note: Short Circuit rating not required under Exception No.1 of UL508A SB4.2.1 effective 4/25/06
	CE	Certified to EN61558-2-20:2011 and EN50581:2012
	Morocco	Compliance to NM EN 61800-5-1
	UKCA	Compliance to EN 61800-3, EN 61800-5-1, EN IEC 63000

(1) For 160 amp rating, see the Termination section of this document for additional information.
(2) For applications with reactors rated 160 amps or more with copper tab terminals, cable-style connections are recommended.

Termination

Reactors are supplied with either an integral-mounted terminal block, box lugs, or copper tabs which are front facing or side facing. See the tables that follow and the Catalog Number Explanation for specific information. The '3R' and '3RA' designations for the 1321 line reactors indicate the following: 3R = Open Enclosure Line Reactor and 3RA = NEMA 1 Enclosure Line Reactor. The dimensions and weights that are provided on the pages that follow are for estimating purposes only. Tab orientation may vary.

Typical Termination Types and Specifications

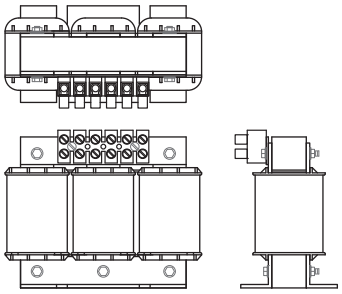

20, 65, or 85 A Terminal Blocks

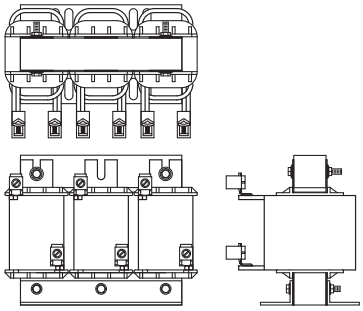

SLU-125
Box Lugs

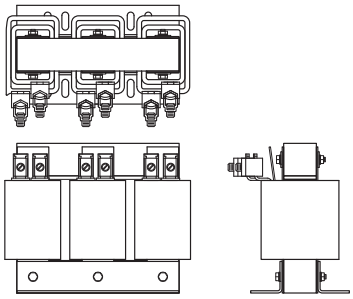

SLU-225
Box Lugs

Reactor Catalog Number		Termination	Max/Min Wire Size	Max Torque
IP00 (Open) or IP20	IP11 (NEMA/UL Type 1)	Type	mm^2 (AWG)	N•m (lb•in)
1321-3R1-A to 1321-3R8-D	1321-3RA1-A to 1321-3RA8-D	20 A Terminal Block	5.26 / 0.3 (10/22)	0.51 (4.5)
1321-3R12-A to 1321-3R35-B	1321-3RA12-A to 1321-3RA35-B	65 A Terminal Block	16.0/0.3 (5/22)	1.81 (16)
1321-3R35-C to 1321-3R45-C	1321-3RA35-C to 1321-3RA45-C	85 A Terminal Block	21.2/0.8 (4/18)	2.26 (20)
1321-3R55-A to 1321-3R100-C	1321-3RA55-A to 1321-3RA100-C	SLU-125 Box Lug	50.0/10.0 (0/6)	5.09 (45)
1321-3R130-A to 1321-3R160-A	1321-3RA130-A to 1321-3RA160-A	SLU-225 Box Lug	120.0/27.0 (0000/2)	16.95 (150)

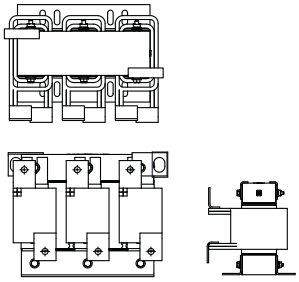

Front Facing Copper Tabs Pointed Up and Down

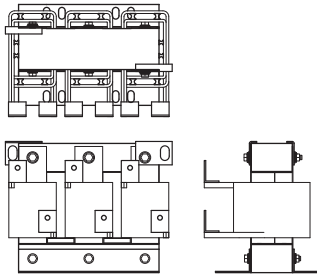

Front Facing Copper Tabs

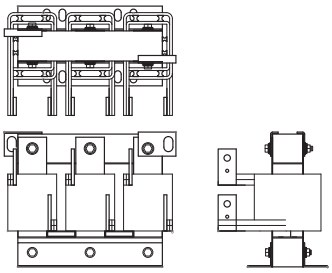

Side Facing Copper Tabs

Reactor Catalog Number		Termination	Contact Surface (H x W)	Hole Diameter
IP00 (Open) or IP20 (R, RB)	IP11 (NEMA/UL Type 1) (RA, RAB)	Type	mm (in.)	mm (in.)
1321-3R160-B to 1321-3R200-C	1321-3RA160-B to 1321-3RA200-C	Front or Side Facing Copper Tab	44.5 x 38.1 (1.75 x 1.5)	10.31 (0.406)
1321-3RB250-A to 1321-3RB250-C	1321-3RAB250-A to 1321-3RAB250-C		47.63 x 38.10 (1.88 x 1.5)	10.31 (0.406)
1321-3RB320-A to 1321-3R500-A	1321-3RAB320-A to 1321-3RA500-A		47.63 x 38.10 (1.88 x 1.5)	10.31 (0.406)
1321-3R500-B to 1321-3R500-C	1321-3RA500-B to 1321-3RA500-C	Side Facing Copper Tab	76.2 x 38.1 (3.00 x 1.5)	13.49 and 6.35 (0.531 and 0.25)
1321-3R600-A to 1321-3R600-C	1321-3RA600-A to 1321-3RA-600-C		76.2 x 38.1 (3.00 x 1.5)	13.49 and 6.35 (0.531 and 0.25)
1321-3R750-A to 1321-3R750-C	1321-3RA750-A to 1321-3RA750-C		76.2 x 38.1 (3.00 x 1.5)	13.49 and 6.35 (0.531 and 0.25)
1321-3R850-A to 1321-3R1000-C	1321-3RA850-A to 1321-3RA1000-C	Front Facing Copper Tab	95.25 x 95.25 (3.75 x 3.75)	x4 13.46 (0.53)

Mounting Dimensions and Weights

IMPORTANT The dimensions and weights that are provided on the following pages are for estimating purposes only. Conduit entry locations for floor-mounted enclosures are the responsibility of the installer. Contact your Rockwell Automation sales office if certified drawings are required for planning and installation.

IP11 (NEMA/UL Type 1)

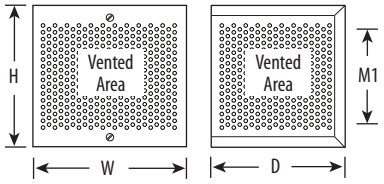

Cabinet 1 – Wall Mounted

Catalog Number 1321- …	Unit	Dimensions in mm (in.) and Weights in kg (lb)				
		H	W	D	M1	Weight (Cabinet Only)
3RA1-A to 3RA18-B	Cabinet 1	203 (8.0)	203 (8.2)	152 (6.3)	140 (5.5)	3.2 (7)

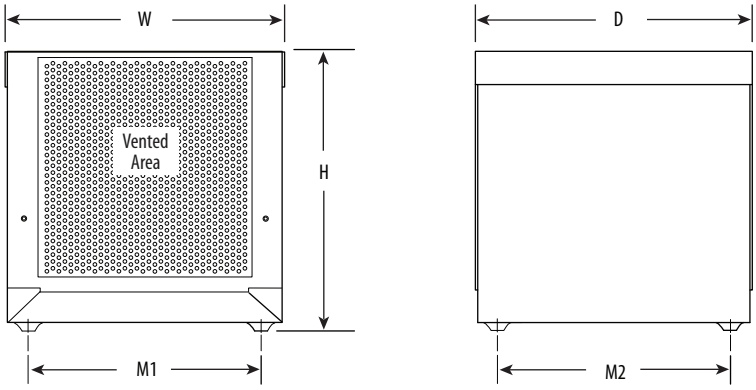

Cabinet 2 – Floor Mounted

Catalog Number 1321- …	Unit	Dimensions in mm (in.) and Weights in kg (lb)					
		H	W	D	Feet M1	Feet M2	Weight (Cabinet Only)
3RA18-C to 3RAB250-A	Cabinet 2	330 (13.0)	336 (13.2)	332 (13.1)	279 (11.0)	279 (11.0)	8.2 (18)

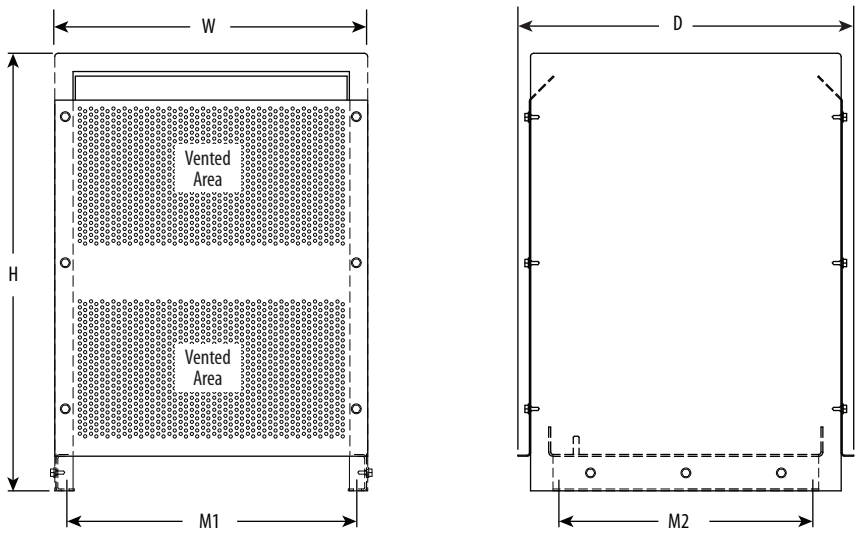

Cabinet 3 – Floor Mounted

Catalog Number 1321- . . .	Unit	Dimensions in mm (in.) and Weights in kg (lb)					
		H	W	D	Feet M1	Feet M2	Weight (Cabinet Only)
3RAB250-B to 3RA500-A	Cabinet 3	610 (24.0)	429 (16.9)	467 (18.4)	406 (16.0)	343 (13.5)	12.2 (27)

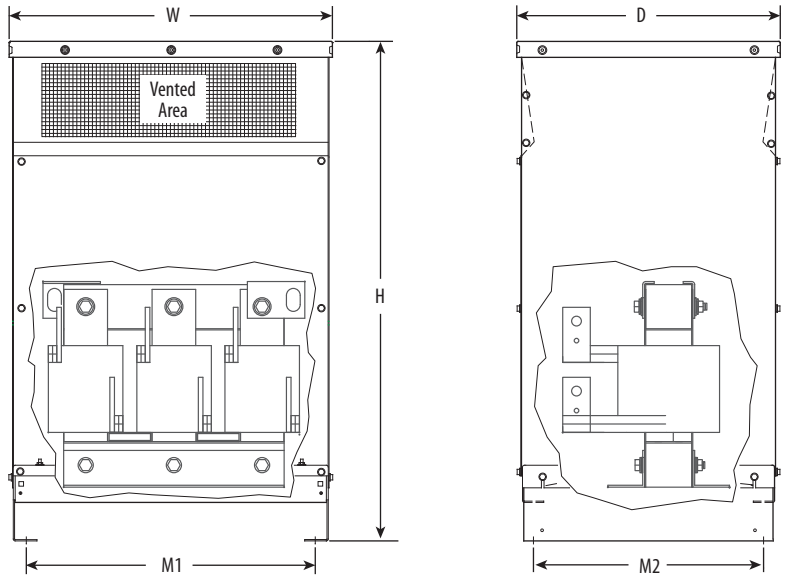

Cabinet 4 and Cabinet 5 – Floor Mounted

Catalog Number 1321- . . .	Unit	Dimensions in mm (in.) and Weights in kg (lb)					
		H	W	D	Feet M1	Feet M2	Weight [(1)] (Cabinet Only)
3RA500-B to 3RA850-B	Cabinet 4	1194 (47.0)	674 (26.6)	633 (24.9)	592 (23.3)	552 (21.8)	62.14 (137)
3RA850-C to 3RA1000-C	Cabinet 5	1829 (72.0)	674 (26.6)	633 (24.9)	592 (23.3)	552 (21.8)	75.3 (166)

(1) For total weight - add enclosure weight to specific reactor weight.

IP00/Open

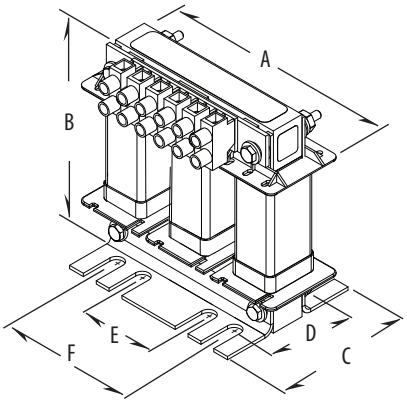

Use the reactor outline shown to reference dimensions in the Sizing Guidelines. Dimensions A, B, and C show the overall width, height, and depth, respectively. Dimensions D, E, and F show the mounting dimensions.

This diagram is for reference only - your actual product may differ in terminal location and type, as well as the number and type of mounting options.

Sizing Guidelines

Fundamental amps are used for sizing the reactor to be equal to or slightly higher than the total motor FLA. Sizing reactors to drive ampere ratings alone may result in mis-sizing the reactor.

Catalog Number	Fundamental Amps	**Inductance - mH** (Based on Fundamental Amps)	Watts Loss	**Dimensions in mm (in.) and Weight in kg (lb)**						
				A	**B**	**C**	**D**[1]	**E**	**F**	**Weight (apx.)**
1321-3R1-A	1	100	14.1	106.7 (4.2)	101.6 (4.0)	76.2 (3.0)	61 (2.4)	37 (1.4)	65 (2.6)	1.8 (4.0)
1321-3R1-B		50	14.8	111.8 (4.4)	104.1 (4.1)	71.1 (2.8)	50 (2.0)	37 (1.4)	65 (2.6)	1.8 (4.0)
1321-3R1-C		36	12	111.8 (4.4)	104.1 (4.1)	71.1 (2.8)	50 (2.0)	37 (1.4)	65 (2.6)	1.8 (4.0)
1321-3R1-D		18	8	111.8 (4.4)	104.1 (4.1)	71.1 (2.8)	50 (2.0)	37 (1.4)	65 (2.6)	1.4 (3.0)
1321-3R2-A	2	12	7.5	106.7 (4.2)	101.6 (4.0)	66 (2.6)	50 (2.0)	37 (1.4)	65 (2.6)	1.8 (4.0)
1321-3R2-B		20	11.3	106.7 (4.2)	101.6 (4.0)	66 (2.6)	50 (2.0)	37 (1.4)	65 (2.6)	1.8 (4.0)
1321-3R2-C		32	16	106.7 (4.2)	101.6 (4.0)	66 (2.6)	50 (2.0)	37 (1.4)	65 (2.6)	1.8 (4.0)
1321-3R2-D		6	10.7	106.7 (4.2)	101.6 (4.0)	66 (2.6)	44 (1.7)	37 (1.4)	65 (2.6)	1.4 (3.0)
1321-3R4-A	4	3	14.5	106.7 (4.2)	101.6 (4.0)	66 (2.6)	50 (2.0)	37 (1.4)	65 (2.6)	1.8 (4.0)
1321-3R4-B		6.5	20	106.7 (4.2)	101.6 (4.0)	66 (2.6)	50 (2.0)	37 (1.4)	65 (2.6)	1.8 (4.0)
1321-3R4-C		9	20	106.7 (4.2)	101.6 (4.0)	76.2 (3.0)	60 (2.4)	37 (1.4)	65 (2.6)	2.3 (5.0)
1321-3R4-D		12	21	106.7 (4.2)	101.6 (4.0)	83.8 (3.3)	66 (2.6)	37 (1.4)	65 (2.6)	2.7 (6.0)
1321-3R8-A	8	1.5	19.5	149.9 (5.9)	116.8 (4.6)	73.7 (2.9)	53 (2.1)	51 (2.0)	76.2 (3.0)	3.2 (7.0)
1321-3R8-B		3	29	149.9 (5.9)	116.8 (4.6)	73.7 (2.9)	53 (2.1)	51 (2.0)	76.2 (3.0)	3.6 (8.0)
1321-3R8-C		5	25.3	149.9 (5.9)	119.4 (4.7)	83.8 (3.3)	67 (2.6)	51 (2.0)	76.2 (3.0)	5.0 (11.0)
1321-3R8-D		7.5	28	149.9 (5.9)	119.4 (4.7)	83.8 (3.3)	63 (2.5)	51 (2.0)	76.2 (3.0)	5.9 (13.0)
1321-3R12-A	12	1.25	26	149.9 (5.9)	127 (5.0)	81.3 (3.2)	53 (2.1)	51 (2.0)	76.2 (3.0)	4.1 (9.0)
1321-3R12-B		2.5	31	149.9 (5.9)	127 (5.0)	81.3 (3.2)	53 (2.1)	51 (2.0)	76.2 (3.0)	4.5 (10.0)
1321-3R12-C		4.2	41	149.9 (5.9)	127 (5.0)	96.5 (3.8)	70 (2.8)	51 (2.0)	76.2 (3.0)	8.2 (18.0)
1321-3R18-A	18	0.8	36	149.9 (5.9)	129.5 (5.1)	81.3 (3.2)	54 (2.1)	51 (2.0)	76.2 (3.0)	4.1 (9.0)
1321-3R18-B		1.5	43	149.9 (5.9)	129.5 (5.1)	88.9 (3.5)	63 (2.5)	51 (2.0)	76.2 (3.0)	5.4 (12.0)
1321-3R18-C		2.5	43	180.3 (7.1)	144.8 (5.7)	94 (3.7)	66 (2.6)	76 (3.0)	76.2 (3.0)	7.3 (16.0)

Catalog Number	Fundamental Amps	Inductance - mH (Based on Fundamental Amps)	Watts Loss	Dimensions in mm (in.) and Weight in kg (lb)						
				A	B	C	D[1]	E	F	Weight (apx.)
1321-3R25-A	25	0.5	48	180.3 (7.1)	144.8 (5.7)	86.7 (3.4)	60 (2.4)	76 (3.0)	76.2 (3.0)	5.0 (11.0)
1321-3R25-B		1.2	52	180.3 (7.1)	147.3 (5.8)	86.7 (3.4)	60 (2.4)	76 (3.0)	76.2 (3.0)	6.4 (14.0)
1321-3R25-C		1.8	61	180.3 (7.1)	147.3 (5.8)	106.7 (4.2)	79 (3.1)	76 (3.0)	76.2 (3.0)	9.1 (20.0)
1321-3R35-A	35	0.4	49	180.3 (7.1)	144.8 (5.7)	94 (3.7)	66 (2.6)	76 (3.0)	76.2 (3.0)	6.4 (14.0)
1321-3R35-B		0.8	54	180.3 (7.1)	147.3 (5.8)	94 (3.7)	70 (2.8)	76 (3.0)	76.2 (3.0)	7.3 (16.0)
1321-3R35-C		1.2	54	226.1 (8.9)	182.9 (7.2)	116.8 (4.6)	80 (3.2)	76 (3.0)	108 (4.3)	11.8 (26.0)
1321-3R45-A	45	0.3	54	226.1 (8.9)	180.3 (7.1)	116.8 (4.6)	80 (3.2)	76 (3.0)	108 (4.3)	10.0 (22.0)
1321-3R45-B		0.7	62	226.1 (8.9)	182.9 (7.2)	116.8 (4.6)	80 (3.2)	76 (3.0)	108 (4.3)	11.8 (26.0)
1321-3R45-C		1.2	65	226.1 (8.9)	185.4 (7.3)	129.5 (5.1)	93 (3.7)	76 (3.0)	108 (4.3)	15.4 (34.0)
1321-3R55-A	55	0.25	64	228.6 (9.0)	175.3 (6.9)	134.6 (5.3)	80 (3.2)	76 (3.0)	108 (4.3)	10.9 (24.0)
1321-3R55-B		0.5	67	228.6 (9.0)	175.3 (6.9)	134.6 (5.3)	80 (3.2)	76 (3.0)	108 (4.3)	11.8 (26.0)
1321-3R55-C		0.85	71	226.1 (8.9)	175.3 (6.9)	160 (6.3)	99 (3.9)	76 (3.0)	108 (4.3)	15.4 (34.0)
1321-3R80-A	80	0.2	82	226.1 (8.9)	175.3 (6.9)	144.8 (5.7)	88 (3.5)	92 (3.63)	108 (4.3)	11.3 (25.0)
1321-3R80-B		0.4	86	226.1 (8.9)	180.3 (7.1)	144.8 (5.7)	88 (3.5)	92 (3.63)	108 (4.3)	15 (33.0)
1321-3R80-C		0.7	96	274.3 (10.8)	215.9 (8.5)	167.6 (6.6)	106 (4.2)	92 (3.63)	141.7 (5.6)	28.6 (63.0)
1321-3R100-A	100	0.15	94	226.1 (8.9)	177.8 (7.0)	152.4 (6.0)	88 (3.5)	92 (3.63)	108 (4.3)	13.2 (29.0)
1321-3R100-B		0.3	84	226.1 (8.9)	177.8 (7.0)	167.6 (6.6)	93 (3.7)	92 (3.63)	108 (4.3)	16.8 (37.0)
1321-3R100-C		0.45	108	274.3 (10.8)	213.4 (8.4)	198.1 (7.8)	106 (4.2)	92 (3.63)	141.7 (5.6)	30.4 (67.0)
1321-3R130-A	130	0.1	108	243.8 (9.6)	185.4 (7.3)	149.9 (5.9)	80 (3.2)	76 (3.0)	108 (4.3)	13.2 (29.0)
1321-3R130-B		0.2	180	243.8 (9.6)	182.9 (7.2)	152.4 (6.0)	93 (3.7)	92 (3.63)	108 (4.3)	19.5 (43.0)
1321-3R130-C		0.3	128	274.3 (10.8)	215.9 (8.5)	185.4 (7.3)	106 (4.2)	92 (3.63)	141.7 (5.6)	29 (64.0)
1321-3R160-A	160	0.075	116	243.8 (9.6)	182.9 (7.2)	152.4 (6.0)	80 (3.2)	92 (3.63)	108 (4.3)	18.6 (41.0)
1321-3R160-B		0.15	149	274.3 (10.8)	213.4 (8.4)	170.2 (6.7)	88 (3.5)	92 (3.63)	141.7 (5.6)	24.5 (54.0)
1321-3R160-C		0.23	138	274.3 (10.8)	215.9 (8.5)	187 (7.4)	118 (4.7)	92 (3.63)	141.7 (5.6)	33.6 (74.0)
1321-3R200-A	200	0.055	124	243.8 (9.6)	182.9 (7.2)	180.3 (7.1)	106 (4.2)	92 (3.63)	108 (4.3)	17.2 (38.0)
1321-3R200-B		0.11	168	243.8 (9.6)	182.9 (7.2)	200.7 (7.9)	112 (4.4)	92 (3.63)	108 (4.3)	24.5 (54.0)
1321-3R200-C		0.185	146	274.3 (10.8)	210.8 (8.3)	231.1 (9.1)	150 (5.9)	92 (3.63)	141.7 (5.6)	45.4 (100.0)
1321-3RB250-A	250	0.045	154	243.8 (9.6)	177.8 (7.0)	205.7 (8.1)	106 (4.2)	92 (3.63)	108 (4.3)	21.3 (47.0)
1321-3RB250-B		0.09	231	274.3 (10.8)	215.9 (8.5)	193 (7.6)	131 (5.2)	117 (4.6)	141.7 (5.6)	36.3 (80.0)
1321-3RB250-C		0.15	588	363.2 (14.3)	284.5 (11.2	221 (8.7)	148 (5.8)	117 (4.6)	182.89 (7.2)	56.7 (125.0)
1321-3RB320-A	320	0.04	224	274.3 (10.8)	213.4 (8.4)	200.7 (7.9)	131 (5.2)	117 (4.6)	141.7 (5.6)	36.3 (80.0)
1321-3RB320-B		0.075	264	274.3 (10.8)	213.4 (8.4)	226.1 (8.9)	149 (5.9)	117 (4.6)	141.7 (5.6)	46.3 (102.0)
1321-3RB320-C		0.125	642	363.2 (14.3)	281.9 (11.1)	238.8 (9.4)	181 (7.1)	117 (4.6)	182.9 (7.2)	72.6 (160.0)
1321-3RB400-A	400	0.03	213	279.4 (11.0)	213.4 (8.4)	218.4 (8.6)	131 (5.2)	117 (4.6)	141.7 (5.6)	38.1 (84.0)
1321-3RB400-B		0.06	571	363.2 (14.3)	281.9 (11.1)	238.8 (9.4)	172 (6.8)	117 (4.6)	182.9 (7.2)	53.5 (118.0)
1321-3RB400-C		0.105	293	363.2 (14.3)	281.9 (11.1)	276.9 (10.9)	184 (7.3)	117 (4.6)	182.9 (7.2)	67.6 (149.0)
1321-3R500-A	500	0.025	226	274.3 (10.8)	215.9 (8.5)	238.8 (9.4)	140 (5.5)	117 (4.6)	141.7 (5.6)	42.2 (93.0)
1321-3R500-B		0.05	694	363.2 (14.3)	281.9 (11.1)	269.2 (10.6)	172 (6.8)	117 (4.6)	182.9 (7.2)	72.6 (160.0)
1321-3R500-C		0.085	985	363.2 (14.3)	281.9 (11.1)	330.2 (13.0)	248 (9.8)	117 (4.6)	182.9 (7.2)	95.3 (210.0)

Catalog Number	Fundamental Amps	Inductance - mH (Based on Fundamental Amps)	Watts Loss	Dimensions in mm (in.) and Weight in kg (lb)						
				A	B	C	D[1]	E	F	Weight (apx.)
1321-3R600-A	600	0.02	609	363.2 (14.3)	281.9 (11.1)	223.5 (8.8)	134 (5.3)	117 (4.6)	182.9 (7.2)	54.4 (120.0)
1321-3R600-B		0.04	689	363.2 (14.3)	281.9 (11.1)	279.4 (11.0)	203 (8.0)	117 (4.6)	182.9 (7.2)	79.4 (175.0)
1321-3R600-C		0.065	406	363.2 (14.3)	281.9 (11.1)	342.9 (13.5)	235 (9.3)	117 (4.6)	182.9 (7.2)	122.5 (270.0)
1321-3R750-A	750	0.015	713	363.2 (14.3)	284.5 (11.2)	264.2 (10.4)	168 (6.6)	183 (7.2)	182.9 (7.2)	63.5 (140.0)
1321-3R750-B		0.029	630	363.2 (14.3)	281.9 (11.1)	292.1 (11.5)	204 (8.0)	183 (7.2)	182.9 (7.2)	86.2 (190.0)
1321-3R750-C		0.048	552	355.6 (14.0)	358.1 (14.1)	330.2 (13.0)	242 (9.5)	183 (7.2)	182.9 (7.2)	120.2 (265.0)
1321-3R850-A	850	0.015	798′	452.1 (17.8)	393.7 (15.5)	375.9 (14.8)	199.6 (7.9)	183 (7.2)	182.9 (7.2)	88.5 (195.0)
1321-3R850-B		0.027	930	452.1 (17.8)	393.7 (15.5)	393.7 (15.5)	—	—	182.9 (7.2)	97.5 (215.0)
1321-3R850-C		0.042	1133	452.1 (17.8)	401.3 (15.8)	444.5 (17.5)	—	—	182.9 (7.2)	142.9 (315.0)
1321-3R1000-B	1000	0.022	1080	431.8 (17.0)	370.8 (14.6)	373.4 (14.7)	—	—	182.9 (7.2)	97.5 (215.0)
1321-3R1000-C		0.038	1250	431.8 (17.0)	370.8 (14.6)	436.9 (17.2)	—	—	182.9 (7.2)	142.9 (315.0)

(1) Removable lifting rings are supplied with the unit.

1321 Reflective Wave Reduction (RWR) Devices

Description of Reflected Wave Phenomenon

The inverter section of a drive does not produce sinusoidal voltage, but rather a series of voltage pulses created from the DC bus. These pulses travel down the motor cables to the motor and then reflected back to the drive. The reflection is dependent on the rise time of the drive output voltage, cable characteristics, cable length, and motor impedance. If the voltage reflection is combined with another subsequent pulse, peak voltages can be at a destructive level. An IGBT drive output may have reflected wave transient voltage stresses of up to twice (2 pu or per unit) the DC bus voltage between its own output wires. Multiple drive output wires in a single conduit or wire tray further increase output wire voltage stress between multi-drive output wires that are touching. Drive #1 may have a (+) 2 pu stress while drive #2 may simultaneously have a (–) 2 pu stress.

For more details, see the Wiring and Grounding Guidelines for PWM Drives, publication DRIVES-IN001.

Applying RWR Devices

At the Output of the Drive

In long motor lead applications, an Allen-Bradley 1321 RWR located between the drive and motor helps to reduce dv/dt and motor terminal peak voltages. The use of an RWR device also helps protect the drive from surge currents that are caused by rapid changes in the load.

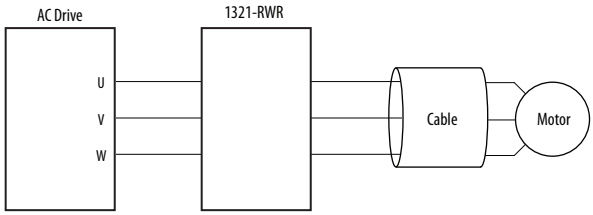

- Protect motors from long lead effects
- Reduce output voltage dv/dt
- Extend semiconductor life
- Reduce surge currents
- Reduce motor temperature
- Reduce audible motor noise

Motor Protection

Allen-Bradley Reflective Wave Reduction devices can help protect motors from high peak voltages.

For IGBT drive applications with long drive-to-motor lead lengths, Allen-Bradley RWR devices can help protect against fast dv/dt rise times.

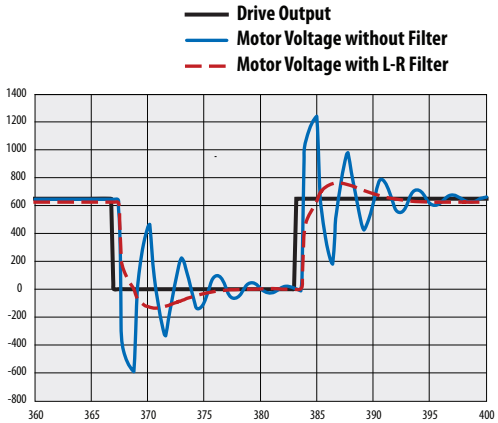

Catalog Number Explanation

IMPORTANT 1321-RWR products replace existing 1204-RWR products. However, 1204-RWRC modules (RWR and Common Mode Choke assembly) are still available.

1-8	Position 9		11	12
1321 – RWR	8	–	D	P
a	b		c	d

a

Product	
Code	Type
1321-RWR	Reflective Wave Reduction Device

c

Voltage Rating	
Code	Voltage
D	400/480V AC
E	600V AC

d

Enclosure	
Code	Description
P	Panel Mount

b1

Rating 400-480V AC	
Code	Fundamental Amps
8	8
12	12
18	18
25	25
35	35
45	45
55	55
80	80
100	100
130	130
160	160
200	200
250	250
320	320

b2

Rating 600V AC	
Code	Fundamental Amps
8	8
12	12
18	18
25	25
35	35
45	45
55	55
80	80
100	100
130	130
160	160
200	200
250	250

Specifications

Specification		Rating
Material	Enclosures	IP00 (Open)
	Terminations	1…45 amp (fundamental) Ratings – Finger guard IP20 terminal block
		80…160 amp (fundamental) Ratings – Solid copper box lugs
		200…400 amp (fundamental) Ratings – Copper tab terminals (1)
		401 amps and above – Copper tab terminals (1)
Harmonic Compensation	All line reactors are compensated for the additional currents and high frequencies that are caused by the presence of harmonics	
General Protection	Impedance	3%
	Overload Rating	300% of fundamental current for (1) minute
IGBT Protection	First turn triple insulated offering protection up to 16 kV	16,000 Volts per microsecond dv/dt protection 20 kHz maximum switching frequency
Electrical	Maximum Rated Voltage	600V AC, 50/60 Hz frequency
	Maximum Switching Freq.	4 kHz
	Temperature Rise	115 °C
	Dielectric Strength	4000 Volts rms (5600 volts peaks)
	Inductance Curve	100% at 100% current, 100% at 150% current, 50% at 350% current
	Insulation System	Class H (180 °C or better)
	Impregnation	High bond strength epoxy impregnation, 4000V high dielectric strength
Environmental	Ambient Temperature	45 °C
	U.L. Listed	UL-508 - IP00, IP20, and IP11
	International	Conforms to VDE 0550
	CE	Not certified
	Storage Temperature (all const.)	-40…+70°C (-40…+158°F)
	Humidity	5…95% noncondensing

(1) For applications with Reflective Wave Reduction devices rated 200 amps or more, cable-style connections are recommended.

Termination

Allen-Bradley 1321 RWR devices rated 45 amps (fundamental) and below are supplied with an integral mounted terminal block. Devices that are rated 55...160 amps (fundamental) are supplied with box lugs. Devices rated 200...400 amps (fundamental) can be supplied with box lugs or copper tabs. Above 400 amps (fundamental), solid copper tabs are used.

Approximate Dimensions, Weights, Wire Size, and Terminal Blocks

The dimensions and weights that are provided on the following page is for estimating purposes only. Contact your Rockwell Automation sales office if certified drawings are required for planning and installation.

RWR Catalog No. x = D (400V), E (600V)	Fund. Amps	Cont. Amps	Wire Size	Watts Loss		Figure (see page 16)	Dimensions *mm (in.)*					Weight
			mm^2 (AWG)	400V	600V		A	B	C	D	E	kg (lb)
1321-RWR8-xP	8	12	2.5…4.0 (14…12)	389	536	1	282.6 (11.13)	298.5 (11.75)	171.5 (6.75)	7.4 (0.29)	7.4 x 11.6 (0.29 x 0.46)	4.8 (10.5)
1321-RWR12-xP	12	18	2.5…4.0 (14…12)	391	406	1	282.6 (11.13)	298.5 (11.75)	174.6 (6.88)	7.4 (0.29)	7.4 x 11.6 (0.29 x 0.46)	5.7 (12.5)
1321-RWR18-xP	18	27	2.5…4.0 (14…12)	403	551	1	282.6 (11.13)	298.5 (11.75)	174.6 (6.88)	7.4 (0.29)	7.4 x 11.6 (0.29 x 0.46)	7.3 (16)
1321-RWR25-xP	25	37.5	6.0 (10)	412	562	1	282.6 (11.13)	298.5 (11.75)	193.7 (7.63)	7.4 (0.29)	7.4 x 11.6 (0.29 x 0.46)	7.7 (17)
1321-RWR35-xP	35	52.5	10.0…16.0 (8…6)	414	429	1	282.6 (11.13)	298.5 (11.75)	193.7 (7.63)	7.4 (0.29)	7.4 x 11.6 (0.29 x 0.46)	8.8 (19.5)
1321-RWR45-xP	45	67.5	16.0 (6)	422	572	2	319.1 (12.56)	392.1 (15.44)	158.8 (6.25)	10.5 (0.41)	10.3 x 17.9 (0.41 x 0.70)	17.5 (38.5)
1321-RWR55-xP	55	82.5	25.0 (4)	427	577	2	320.7 (12.63)	392.1 (15.44)	158.8 (6.25)	10.5 (0.41)	10.3 x 17.9 (0.41 x 0.70)	18.4 (40.5)
1321-RWR80-xP	80	120	35.0…50.0 (2…1/0)	446	341	2	322.3 (12.69)	395.3 (15.56)	177.8 (7.00)	10.5 (0.41)	10.3 x 17.9 (0.41 x 0.70)	20.4 (45)
1321-RWR100-xP	100	150	50.0…70.0 (1/0…2/0)	444	339	2	320.7 (12.63)	393.7 (15.50)	187.3 (7.38)	10.5 (0.41)	10.3 x 17.9 (0.41 x 0.70)	22.5 (49.5)
1321-RWR130-xP	130	195	70.0…120.0 (2/0…4/0)	630	495	2	317.5 (12.50)	390.5 (15.38)	187.3 (7.38)	10.5 (0.41)	10.3 x 17.9 (0.41 x 0.70)	24.5 (54)
1321-RWR160-xP	160	240	120.0 (4/0)	599	464	3	355.6 (14.00)	438.2 (17.25)	250.8 (9.88)	10.5 (0.41)	10.3 x 25.8 (0.41 x 1.02)	30.8 (68)
1321-RWR200-xP	200	300	120.0…185.0 (4/0…350 MCM)	618	612	2	317.5 (12.50)	393.7 (15.50)	214.3 (8.44)	10.5 (0.41)	10.3 x 17.9 (0.41 x 0.70)	29.9 (66)
1321-RWR250-xP	250	375	185.0 (350 MCM)	681	546	3	358.8 (14.13)	439.8 (17.31)	225.4 (8.88)	10.5 (0.41)	10.3 x 25.8 (0.41 x 1.02)	41.7 (92)
1321-RWR320-DP	320	480	240.0 (500 MCM)	489	—	3	358.8 (14.13)	438.2 (17.25)	250.8 (9.88)	10.5 (0.41)	10.3 x 25.8 (0.41 x 1.02)	52.2 (115)

1321-RWR Assembly Components

400/480V			
	Resistor		
Reactor	Ohms	Watts	Wire Size (AWG)
1321-3R8-B	50	250	14…12
1321-3R12-B	50	250	14…12
1321-3R18-B	50	250	14…12
1321-3R25-B	50	250	10
1321-3R35-B	50	250	8…6
1321-3R45-B	50	250	6
1321-3R55-B	50	250	4
1321-3R80-B	50	250	2…1/0
1321-3R100-B	50	250	1/0…2/0
1321-3R130-B	50	300	2/0…4/0
1321-3R160-B	50	300	4/0
1321-3R200-B	50	300	4/0…350 MCM
1321-3RB250-B	50	300	350 MCM
1321-3R320-B	50	300	500 MCM

600V			
	Resistor		
Reactor	Ohms	Watts	Wire Size (AWG)
1321-3R8-B	50	375	14…12
1321-3R12-B	50	375	14…12
1321-3R18-B	50	375	14…12
1321-3R25-B	50	375	10
1321-3R35-B	50	375	8…6
1321-3R45-B	50	375	6
1321-3R55-B	50	375	4
1321-3R80-B	50	375	2…1/0
1321-3R100-B	50	375	1/0…2/0
1321-3R130-B	50	420	2/0…4/0
1321-3R160-B	50	420	4/0
1321-3R200-B	50	420	4/0…350 MCM
1321-3RB250-B	50	420	350 MCM

Dimension Reference

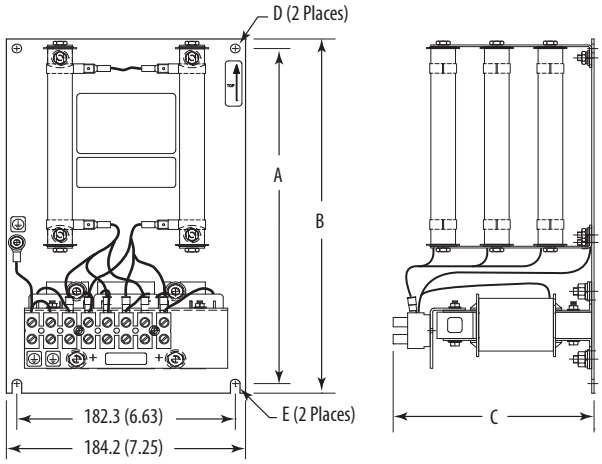

Figure 1

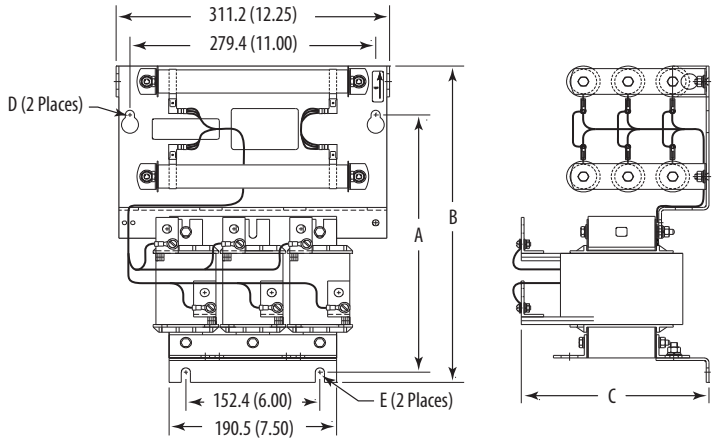

Figure 2

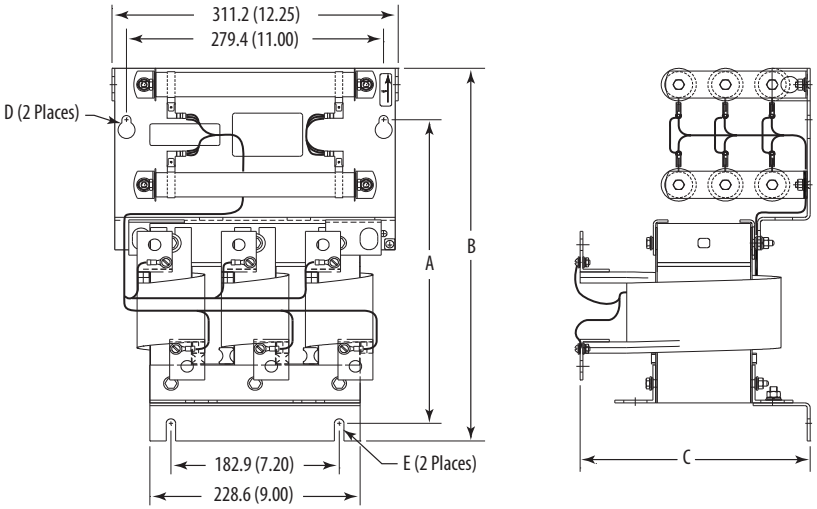

Figure 3

Terminal Block Details

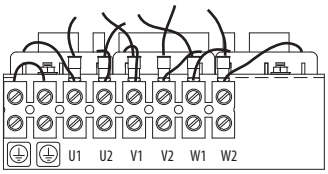

Details for Figure 1

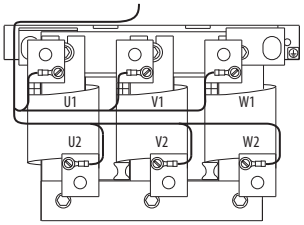

Details for Figure 2 and Figure 3

1321-3TH/3TW Series Three-Phase Isolation Transformers

Allen-Bradley 1321 Isolation Transformers are designed to meet the standard horsepower, voltage ratings, and harmonics of the Allen-Bradley variable speed drives.

Catalog Number Explanation

Position	1-4		6	7	8	9		11	12
	1321	–	3	T	W	005	–	A	A
	a		b	c	d	e		f	g

a

Product	
Code	Type
1321	Power Component

b

Phases	
Code	Description
3	Three-Phase

c

Device	
Code	Description
T	Transformer

d

Mounting	
Code	Description
W	Wall
H	Floor

e

Rating	
Code	kVA
005	5
007	7.5
011	11
014	14
020	20
027	27
034	34
040	40
051	51
063	63
075	75
093	93
118	118
145	145
175	175
220	220
275	275
330	330
440	440
550	550
660	660
770	770
880	880

f

Primary Voltage	
Code	Voltage
A	230V AC
B	460V AC
C	575V AC
X	208V AC

g

Secondary Voltage	
Code	Voltage
A	230V AC
B	460V AC
C	575V AC
X	208V AC

Specifications

Specification		Rating
Electrical	General	Delta primary, wye secondary, 60 Hz, aluminum wound, neutral terminal available for customer use
	Standard Voltage Taps	5.0…175 kVA, 1…5.0% FCAN and FCBN
		220…880 kVA, 1…2.5% FCAN and FCBN
	Insulation System	Class 220
		150 °C rise over 40 °C ambient
		Peak 40 °C ambient with 30 °C 24-hour average
	Efficiency	98% (2% losses)
Environmental	Elevation	Up to 1000 meters. Above 1000 meters, consult factory for derating
	U.L. Listed	File E112313
	Storage Temperature (all const.)	-40…+70°C (-40…+158°F)
	Humidity	5…95% noncondensing
Construction	Enclosure	NEMA/UL Type 3R (IP32)
		Heavy duty ventilated enclosure with metal screens that help protect all vents and finished in ANSI 61 grey
	Termination	Transformers up to 75 kVA have integral high and low voltage lugs that are installed, suitable for copper or aluminum cable installation
	Conduit Entry	Standard knockouts on all enclosures
	Mounting	5…51 kVA units suitable for either floor or wall mounting. 63…75 kVA units suitable for floor, wall, or ceiling mounting with mounting kit 1321-3TWM2 (Style NH3). Larger units are floor mount only
General	Impedance	4…6% impedance (nominal)
	Short Circuit Capability	Meets UL short circuit withstand capability
	Overload Rating	Windings that are designed to withstand overcurrent of 150% of rated load for 60 Seconds or 200% of rated load for 30 Seconds
	Duty Cycle	(1) start every (2) hours
	Thermostats	Thermostats with 1 N.C. contact in each coil, which are wired in series and integral on all units
	K-factor	4

Approximate Mounting Dimensions

IP32, NEMA/UL Type 3R - Styles NH3 Through NH4

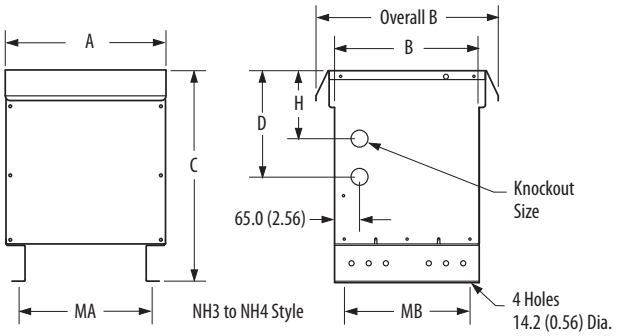

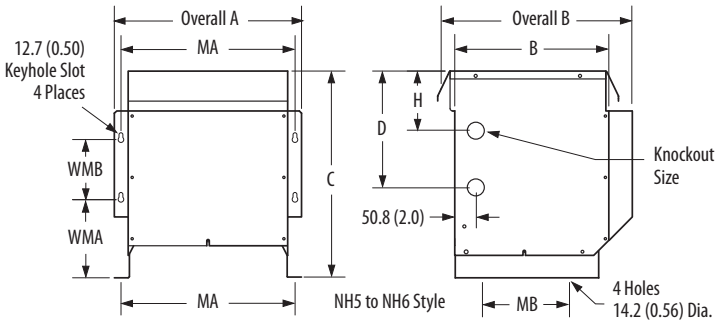

Dimensions in mm (in.)

Style	A	Overall A	B	Overall B	C	D	H	K	MA	MB	WMB	WMA
NH3	660.4 (26.00)	—	533.4 (21.00)	635.0 (25.00)	66.0 (38.00)	609.6 (24.00)	355.6 (14.00)	50.8 x 76.2 (2.00 x 3.00)	546.1 (21.50)	482.6 (19.00)	—	—
NH4	812.8 (32.00)	—	647.7 (25.50)	749.3 (29.50)	68.0 (41.00)	609.6 (24.00)	304.8 (12.00)	50.8 x 76.2 (2.00 x 3.00)	596.9 (23.50)	596.9 (23.50)	—	—
NH5 (1)	425.5 (16.75)	492.8 (19.40)	381.0 (15.00)	513.1 (20.20)	546.1 (21.50)	304.8 (12.00)	152.4 (6.00)	35.1 x 44.4 (1.38 x 1.75)	457.2 (18.00)	228.6 (9.00)	177.8 (7.00)	184.4 (7.26)
NH6 (1)	546.1 (21.50)	607.1 (23.90)	495.3 (19.50)	730.3 (28.75)	730.3 (28.75)	431.8 (17.00)	215.9 (8.50)	35.1 x 44.4 (1.38 x 1.75)	577.9 (22.75)	228.6 (9.00)	203.2 (8.00)	247.1 (9.73)

(1) Enclosure Styles NH1 and NH2 are replaced by NH5 and NH6 for 1321-3TH005 through 1321-3TH051 transformer ratings.

IP32, NEMA/UL Type 3R -Styles NJ1 Through NJ6

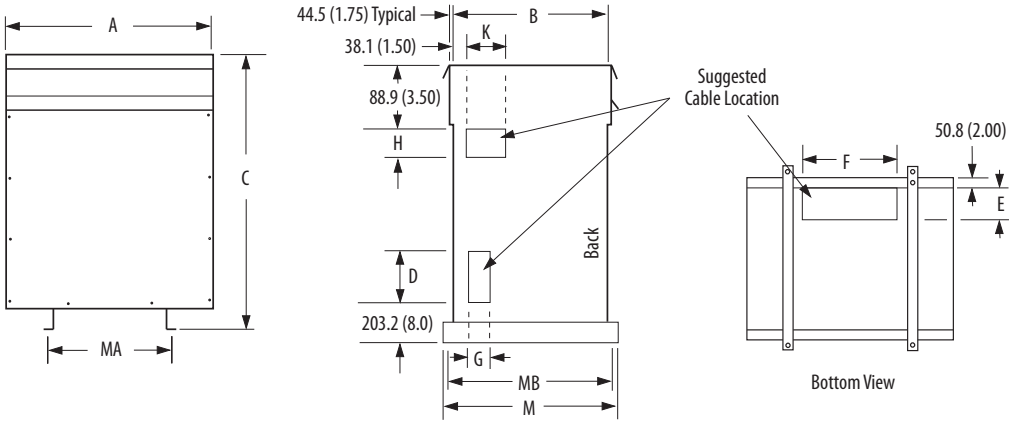

Dimensions in mm (in.)

Style	A	B	C	D	E	F	G	H	K	M	MA	MB
NJ1	1003.3 (39.50)	762.0 (30.00)	1308.1 (51.50)	254.0 (10.00)	190.5 (7.50)	546.1 (21.50)	203.2 (8.00)	165.1 (6.50)	342.9 (13.50)	863.6 (34.00)	609.6 (24.00)	812.8 (32.00)
NJ2	1239.1 (48.50)	836.6 (34.00)	1498.6 (59.00)	330.2 (13.00)	215.9 (8.50)	635.0 (25.00)	228.6 (9.00)	215.9 (8.50)	393.7 (15.50)	965.2 (38.00)	698.5 (27.50)	914.4 (36.00)
NJ3	1308.1 (51.50)	990.6 (39.00)	1676.4 (66.00)	406.4 (16.00)	241.3 (9.50)	800.1 (31.50)	254.0 (10.00)	292.1 (11.50)	457.2 (18.00)	1092.2 (43.00)	863.6 (34.00)	1041.4 (41.00)
NJ6	1625.6 (64.00)	1016.0 (40.00)	1727.2 (68.00)	406.4 (16.00)	266.7 (10.50)	952.5 (37.50)	279.4 (11.00)	292.1 (11.50)	457.2 (18.00)	1117.6 (44.00)	1016.0 (40.00)	1066.8 (42.00)

Wiring Diagrams, Ratings, and Weights

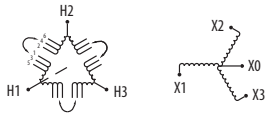

Wiring Diagram 1

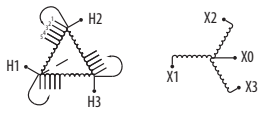

Wiring Diagram 2

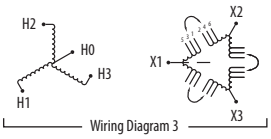

Wiring Diagram 3

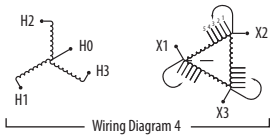

Wiring Diagram 4

kVA	Catalog Number	Style	Primary Voltage	Secondary Voltage	Wiring Diagram	Weight kg (lb)
5	1321-3TW005-AB	NH5	230	460	3	63.5 (140)
	1321-3TW005-AC	NH5	230	575	3	63.5 (140)
	1321-3TW005-BA	NH5	460	230	1	63.5 (140)
	1321-3TW005-BB	NH5	460	460	1	63.5 (140)
	1321-3TW005-BC	NH5	460	575	3	63.5 (140)
	1321-3TW005-CA	NH5	575	230	1	63.5 (140)
	1321-3TW005-CB	NH5	575	460	1	63.5 (140)
	1321-3TW005-CC	NH5	575	575	1	63.5 (140)
	1321-3TW005-XX	NH5	208	208	1	63.5 (140)
40	1321-3TW040-AA	NH6	230	230	2	145.2 (320)
	1321-3TW040-AB	NH6	230	460	4	145.2 (320)
	1321-3TW040-AC	NH6	230	575	4	145.2 (320)
	1321-3TW040-BA	NH6	460	230	2	145.2 (320)
	1321-3TW040-BB	NH6	460	460	2	145.2 (320)
	1321-3TW040-BC	NH6	460	575	4	145.2 (320)
	1321-3TW040-CA	NH6	575	230	2	145.2 (320)
	1321-3TW040-CB	NH6	575	460	2	145.2 (320)
	1321-3TW040-CC	NH6	575	575	2	145.2 (320)
51	1321-3TW051-AA	NH6	230	230	2	190.5 (420)
	1321-3TW051-AB	NH6	230	460	4	190.5 (420)
	1321-3TW051-AC	NH6	230	575	4	190.5 (420)
	1321-3TW051-BA	NH6	460	230	2	190.5 (420)
	1321-3TW051-BB	NH6	460	460	2	190.5 (420)
	1321-3TW051-BC	NH6	460	575	4	190.5 (420)
	1321-3TW051-CA	NH6	575	230	2	190.5 (420)
	1321-3TW051-CB	NH6	575	460	2	190.5 (420)
	1321-3TW051-CC	NH6	575	575	2	190.5 (420)
63	1321-3TH063-AA	NH3	230	230	2	244.9 (540)
	1321-3TH063-AB	NH3	230	460	4	244.9 (540)
	1321-3TH063-AC	NH3	230	575	4	244.9 (540)
	1321-3TH063-BA	NH3	460	230	2	244.9 (540)
	1321-3TH063-BB	NH3	460	460	2	244.9 (540)
	1321-3TH063-BC	NH3	460	575	4	244.9 (540)
	1321-3TH063-CA	NH3	575	230	2	244.9 (540)
	1321-3TH063-CB	NH3	575	460	2	244.9 (540)
	1321-3TH063-CC	NH3	575	575	2	244.9 (540)

kVA	Catalog Number	Style	Primary Voltage	Secondary Voltage	Wiring Diagram	Weight kg (lb)
75	1321-3TH075-AA	NH3	230	230	2	263.1 (580)
	1321-3TH075-AB	NH3	230	460	4	263.1 (580)
	1321-3TH075-AC	NH3	230	575	4	263.1 (580)
	1321-3TH075-BA	NH3	460	230	2	263.1 (580)
	1321-3TH075-BB	NH3	460	460	2	263.1 (580)
	1321-3TH075-BC	NH3	460	575	4	263.1 (580)
	1321-3TH075-CA	NH3	575	230	2	263.1 (580)
	1321-3TH075-CB	NH3	575	460	2	263.1 (580)
	1321-3TH075-CC	NH3	575	575	2	263.1 (580)
93	1321-3TH093-AA	NH3	230	230	2	285.8 (630)
	1321-3TH093-AB	NH3	230	460	4	285.8 (630)
	1321-3TH093-AC	NH3	230	575	4	285.8 (630)
	1321-3TH093-BA	NH3	460	230	2	285.8 (630)
	1321-3TH093-BB	NH3	460	460	2	285.8 (630)
	1321-3TH093-BC	NH3	460	575	4	285.8 (630)
	1321-3TH093-CA	NH3	575	230	2	285.8 (630)
	1321-3TH093-CB	NH3	575	460	2	285.8 (630)
	1321-3TH093-CC	NH3	575	575	2	285.8 (630)
118	1321-3TH118-AA	NH3	230	230	2	328.9 (725)
	1321-3TH118-AB	NH3	230	460	4	328.9 (725)
	1321-3TH118-AC	NH3	230	575	4	328.9 (725)
	1321-3TH118-BA	NH3	460	230	2	328.9 (725)
	1321-3TH118-BB	NH3	460	460	2	328.9 (725)
	1321-3TH118-BC	NH3	460	575	4	328.9 (725)
	1321-3TH118-CA	NH3	575	230	2	328.9 (725)
	1321-3TH118-CB	NH3	575	460	2	328.9 (725)
	1321-3TH118-CC	NH3	575	575	2	328.9 (725)
145	1321-3TH145-AA	NH4	230	230	2	408.2 (900)
	1321-3TH145-AB	NH4	230	460	4	408.2 (900)
	1321-3TH145-AC	NH4	230	575	4	408.2 (900)
	1321-3TH145-BA	NH4	460	230	2	408.2 (900)
	1321-3TH145-BB	NH4	460	460	2	408.2 (900)
	1321-3TH145-BC	NH4	460	575	4	408.2 (900)
	1321-3TH145-CA	NH4	575	230	2	408.2 (900)
	1321-3TH145-CB	NH4	575	460	2	408.2 (900)
	1321-3TH145-CC	NH4	575	575	2	408.2 (900)

Table continued on next page.

kVA	Catalog Number	Style	Primary Voltage	Secondary Voltage	Wiring Diagram	Weight kg (lb)
175	1321-3TH175-AA	NH4	230	230	2	453.6 (1000)
	1321-3TH175-AB	NH4	230	460	4	453.6 (1000)
	1321-3TH175-AC	NH4	230	575	4	453.6 (1000)
	1321-3TH175-BA	NH4	460	230	2	453.6 (1000)
	1321-3TH175-BB	NH4	460	460	2	453.6 (1000)
	1321-3TH175-BC	NH4	460	575	4	453.6 (1000)
	1321-3TH175-CA	NH4	575	230	2	453.6 (1000)
	1321-3TH175-CB	NH4	575	460	2	453.6 (1000)
	1321-3TH175-CC	NH4	575	575	2	453.6 (1000)
220	1321-3TH220-AA	NJ1	230	230	2	589.7 (1300)
	1321-3TH220-AB	NJ1	230	460	4	589.7 (1300)
	1321-3TH220-AC	NJ1	230	575	4	589.7 (1300)
	1321-3TH220-BA	NJ1	460	230	2	589.7 (1300)
	1321-3TH220-BB	NJ1	460	460	2	589.7 (1300)
	1321-3TH220-BC	NJ1	460	575	4	589.7 (1300)
	1321-3TH220-CA	NJ1	575	230	2	589.7 (1300)
	1321-3TH220-CB	NJ1	575	460	2	589.7 (1300)
	1321-3TH220-CC	NJ1	575	575	2	589.7 (1300)
275	1321-3TH275-AA	NJ1	230	230	2	680.4 (1500)
	1321-3TH275-AB	NJ1	230	460	4	680.4 (1500)
	1321-3TH275-AC	NJ1	230	575	4	680.4 (1500)
	1321-3TH275-BA	NJ1	460	230	2	680.4 (1500)
	1321-3TH275-BB	NJ1	460	460	2	680.4 (1500)
	1321-3TH275-BC	NJ1	460	575	4	680.4 (1500)
	1321-3TH275-CA	NJ1	575	230	2	680.4 (1500)
	1321-3TH275-CB	NJ1	575	460	2	680.4 (1500)
	1321-3TH275-CC	NJ1	575	575	2	680.4 (1500)
330	1321-3TH330-AA	NJ1	230	230	2	771.1 (1700)
	1321-3TH330-AB	NJ1	230	460	4	771.1 (1700)
	1321-3TH330-AC	NJ1	230	575	4	771.1 (1700)
	1321-3TH330-BA	NJ1	460	230	2	771.1 (1700)
	1321-3TH330-BB	NJ1	460	460	2	771.1 (1700)
	1321-3TH330-BC	NJ1	460	575	4	771.1 (1700)
	1321-3TH330-CA	NJ1	575	230	2	771.1 (1700)
	1321-3TH330-CB	NJ1	575	460	2	771.1 (1700)
	1321-3TH330-CC	NJ1	575	575	2	771.1 (1700)
440	1321-3TH440-AA	NJ2	230	230	1	907.2 (2000)
	1321-3TH440-AB	NJ2	230	460	3	907.2 (2000)
	1321-3TH440-AC	NJ2	230	575	3	907.2 (2000)
	1321-3TH440-BA	NJ2	460	230	1	907.2 (2000)
	1321-3TH440-BB	NJ2	460	460	1	907.2 (2000)

kVA	Catalog Number	Style	Primary Voltage	Secondary Voltage	Wiring Diagram	Weight kg (lb)
440	1321-3TH440-BC	NJ2	460	575	3	907.2 (2000)
	1321-3TH440-CA	NJ2	575	230	1	907.2 (2000)
	1321-3TH440-CB	NJ2	575	460	1	907.2 (2000)
	1321-3TH440-CC	NJ2	575	575	1	907.2 (2000)
550	1321-3TH550-AA	NJ2	230	230	1	1134.0 (2500)
	1321-3TH550-AB	NJ2	230	460	3	1134.0 (2500)
	1321-3TH550-AC	NJ2	230	575	3	1134.0 (2500)
	1321-3TH550-BA	NJ2	460	230	1	1134.0 (2500)
	1321-3TH550-BB	NJ2	460	460	1	1134.0 (2500)
	1321-3TH550-BC	NJ2	460	575	3	1134.0 (2500)
	1321-3TH550-CA	NJ2	575	230	1	1134.0 (2500)
	1321-3TH550-CB	NJ2	575	460	1	1134.0 (2500)
	1321-3TH550-CC	NJ2	575	575	1	1134.0 (2500)
660	1321-3TH660-AA	NJ3	230	230	1	1360.8 (3000)
	1321-3TH660-AB	NJ3	230	460	3	1360.8 (3000)
	1321-3TH660-AC	NJ3	230	575	3	1360.8 (3000)
	1321-3TH660-BA	NJ3	460	230	1	1360.8 (3000)
	1321-3TH660-BB	NJ3	460	460	1	1360.8 (3000)
	1321-3TH660-BC	NJ3	460	575	3	1360.8 (3000)
	1321-3TH660-CA	NJ3	575	230	1	1360.8 (3000)
	1321-3TH660-CB	NJ3	575	460	1	1360.8 (3000)
	1321-3TH660-CC	NJ3	575	575	1	1360.8 (3000)
770	1321-3TH770-AA	NJ3	230	230	1	1587.6 (3500)
	1321-3TH770-AB	NJ3	230	460	3	1587.6 (3500)
	1321-3TH770-AC	NJ3	230	575	3	1587.6 (3500)
	1321-3TH770-BA	NJ3	460	230	1	1587.6 (3500)
	1321-3TH770-BB	NJ3	460	460	1	1587.6 (3500)
	1321-3TH770-BC	NJ3	460	575	3	1587.6 (3500)
	1321-3TH770-CA	NJ3	575	230	1	1587.6 (3500)
	1321-3TH770-CB	NJ3	575	460	1	1587.6 (3500)
	1321-3TH770-CC	NJ3	575	575	1	1587.6 (3500)
880	1321-3TH880-AA	NJ6	230	230	1	1678.3 (3700)
	1321-3TH880-AB	NJ6	230	460	3	1678.3 (3700)
	1321-3TH880-AC	NJ6	230	575	3	1678.3 (3700)
	1321-3TH880-BA	NJ6	460	230	1	1678.3 (3700)
	1321-3TH880-BB	NJ6	460	460	1	1678.3 (3700)
	1321-3TH880-BC	NJ6	460	575	3	1678.3 (3700)
	1321-3TH880-CA	NJ6	575	230	1	1678.3 (3700)
	1321-3TH880-CB	NJ6	575	460	1	1678.3 (3700)
	1321-3TH880-CC	NJ6	575	575	1	1678.3 (3700)

1321-Mxxx Common Mode Chokes

1321-Mxxx Common Mode Chokes can be installed with the following Allen-Bradley AC drives.

- PowerFlex® 4-Class
- PowerFlex 520-Series
- PowerFlex 7-Class
- PowerFlex 750-Series
- 1305
- 1336 PLUS™
- 1336 PLUS™ II
- 1336 IMPACT™
- 1336 FORCE™

When installed at the drive output the common mode choke helps to guard against interference with other electrical equipment (Programmable Controllers, sensors, analog circuits, and so forth). In addition, reducing the PWM carrier frequency reduces the effects and lowers the risk of common mode noise interference.

Catalog Number Explanation

1-4		Position 6	7
1321	–	M	009
a		*b*	*c*

a

Product	
Code	Type
1321	Power Component

b

Device	
Code	Description
M	Common Mode Choke

c

Current Rating	
Code	Amps
001 *	1
009	9
048	48
055	55
180	180
670	670

* Same core as 1321-M009. Can be used in place of the M009, M048, or M180 if the terminal block and windings typical of those ratings are not desired.

Ratings

PowerFlex AC Drives

Choke Type	Used With	Ratings	Catalog Number
Open Style, 1A	All PowerFlex Drives	Communication Cables, Analog Signal Cables, and so forth	1321-M001
Open Style, 9A (with terminal strip)	PowerFlex 4M/4/40/40P	0.2…1.1 kW (0.25…2 HP), 100…115V 0.2…1.5 kW (0.25…2 HP), 200…240V 0.4…2.2 kW (0.5…3 HP), 380…480V	1321-M009
	PowerFlex 400	2.2 kW (3 HP) 400…480V	
	PowerFlex 520-Series	0.2…1.1 kW (0.25…1.5 HP), 100…120V 0.2…1.1 kW (0.25…2 HP), 208…240V 0.4…2.2 kW (0.5…3 HP), 400…480V	
	PowerFlex 7-Class	0.3…2.2 kW (0.5…3 HP), 208…230V 0.4…4 kW (0.5…5 HP), 400…480V	
	PowerFlex 750-Series	0.75…4 kW (0.5…5 HP), 400…480V	
Open Style, 48A	PowerFlex 4M/4/40/40P	2.2…7.5 kW (3…10 HP), 200…240V 2.2…11 kW (3…15 HP), 380…480V 2.2…11 kW (3…15 HP), 600V	1321-M048
	PowerFlex 400	2.2…11 kW (3…15 HP), 200…240V 4…22 kW (5…30 HP), 380…480V	
	PowerFlex 520-Series	0.2…14 kW (3…20 HP), 200…240V 4…22 kW (5…30 HP), 400…480V 5.5…22 kW (7.5…30 HP), 600V	
	PowerFlex 7-Class	2.2…11 kW (3…15 HP), 208…240V 4…22 kW (5…30 HP), 400…480V 5.5…37 kW (10…40 HP), 600V	
	PowerFlex 750-Series	5.5…22 kW (7.5…30 HP), 400…480V 5.5…37 kW (7.5…40 HP), 600…690V	

Choke Type	Used With	Ratings	Catalog Number
Open Style, 55A	PowerFlex 7-Class	14 kW (20 HP), 208…240V 22…30 kW (30…40 HP), 400…480V 45 kW (50 HP), 600V	1321-M055
	PowerFlex 750-Series	22…30 kW (30…40 HP), 400…480V 45 kW (50 HP), 600…690V	
Open Style, 180A	PowerFlex 7-Class	14…44 kW (20…60 HP), 208…240V 30…110 kW (40…150 HP), 400…480V 45…132 kW (50…150 HP), 600V	1321-M180
	PowerFlex 750-Series	30…90 kW (40…125 HP), 400…480V 45…132 kW (50…150 HP), 600…690V	
Open Style, 670A	PowerFlex 7-Class	55…75 kW (75…100 HP), 208…240V 149…373 kW (200…500 HP), 400…480V 149…522 kW (200…700 HP), 600V	1321-M670
	PowerFlex 750-Series	110…447 kW (150…600 HP), 400…480V 149…597 kW (200…800 HP), 600…690V	

Allen-Bradley Legacy AC Drives

Choke Type	Used With	Ratings	Catalog Number
Open Style, 1A	All Legacy Drives	Communication Cables, Analog Signal Cables, and so forth	1321-M001
Open Style, 9A (with terminal strip)	1305, 1336 PLUS, and 1336 PLUS II	0.37…2.2 kW (0.5…2 HP), 230V 0.37…3.7 kW (0.5…5 HP), 480V	1321-M009
	1336 IMPACT	0.37…3.7 kW (0.5…5 HP), 480V	
	1336 FORCE	0.75 kW (1 HP), 230V 0.75…2.2 kW (1…3 HP), 480V and 600V	
Open Style, 48A	1336 PLUS and 1336 PLUS II	2.2…11 kW (3…15 HP), 230V 5.5…22 kW (7.5…30 HP), 480V 0.75…30 kW (1…40 HP), 600V	1321-M048
	1336 IMPACT	5.5…22 kW (7.5…30 HP), 480V 5.5…30 kW (7.5…40 HP), 600V	
	1336 FORCE	2.2…11 kW (3…15 HP), 230V 2.2…22 kW (3…30 HP), 480V 0.75…30 kW (1…40 HP), 600V	
Open Style, 55A	1336 PLUS II	14 kW (20 HP), 230V 22…30 kW (30…40 HP), 480V 45 kW (50 HP), 600V	1321-M055
	1336 IMPACT	22…30 kW (30…40 HP), 480V 45 kW (50 HP), 600V	
Open Style, 180A	1336 PLUS and 1336 PLUS II	15…45 kW (20…60 HP), 230V 30…112 kW (40…150 HP), 480V 37…112 kW (50…150 HP), 600V	1321-M180
	1336 IMPACT	30…112 kW (40…150 HP), 480V 37…93 kW (50…125 HP), 600V	
	1336 FORCE	15…45 kW (20…60 HP), 230V 30…112 kW (40…150 HP), 480V 37…112 kW (50…150 HP), 600V	
Open Style, 670A	1336 PLUS and 1336 PLUS II	56…93 kW (75…125 HP), 230V 112…448 kW (150…600 HP), 480V 149…448 kW (200…600 HP), 600V	1321-M670
	1336 IMPACT	112…448 kW (150…600 HP), 480V 149…448 kW (200…600 HP), 600V	
	1336 FORCE	56…93 kW (75…125 HP), 230V 112…448 kW (150…600 HP), 480V 149…448 kW (200…600 HP), 600V	

Approximate Mounting Dimensions

1321-M001 Choke Assembly

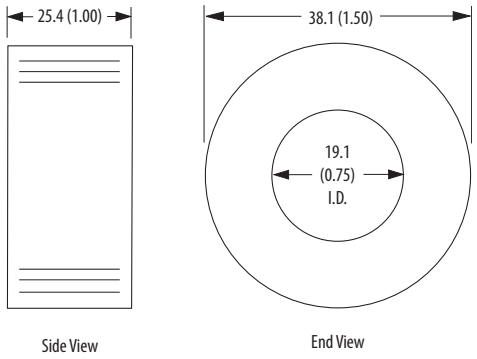

Dimensions in mm (inches)

1321-M009 Choke Assembly

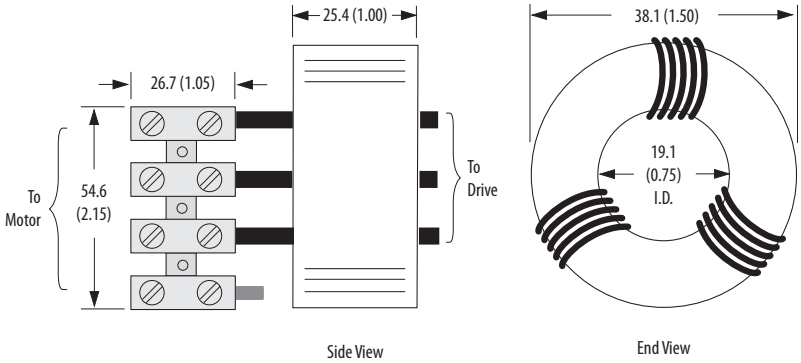

Dimensions in inches (mm)

1321-M048 Choke Assembly

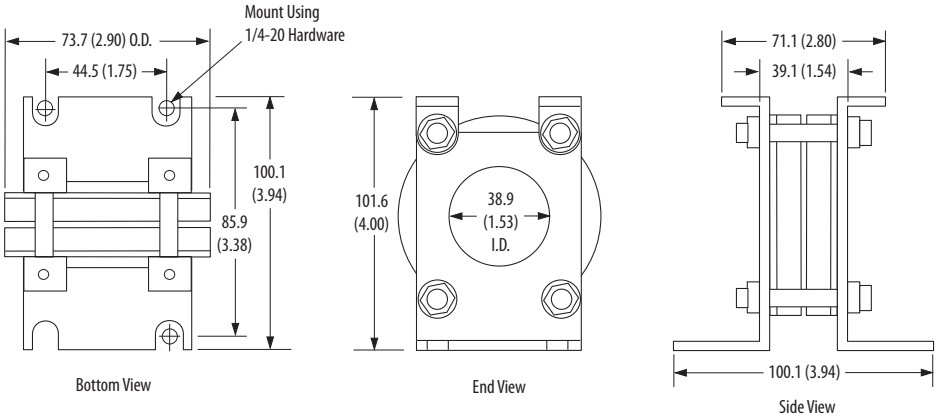

Dimensions are in mm (in.)

1321-M055 Choke Assembly

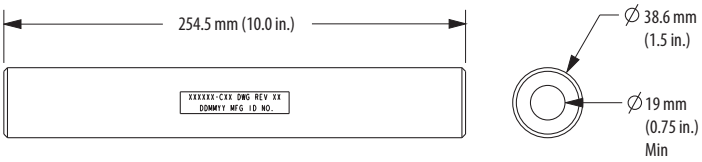

Dimensions in mm (inches)

1321-M180 Choke Assembly

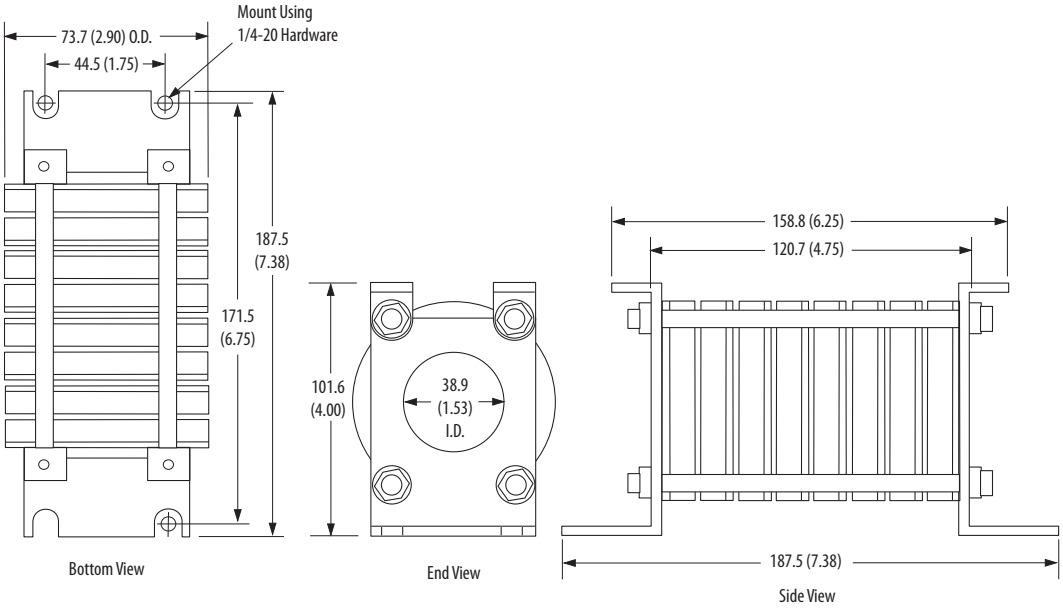

Dimensions are in mm (in.)

1321-M670 Choke Assembly

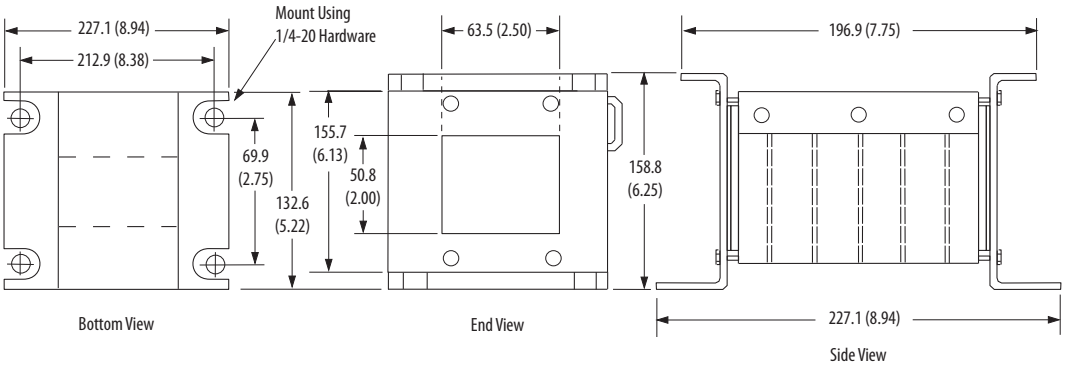

Dimensions are in mm (in.)

1321-DC DC Link Chokes

1321-DC DC Link Chokes can be installed with Frame C PowerFlex 40 and all PowerFlex 400 drives. Add DC Link Chokes in series with the internal DC Bus to:

- Reduce AC input line harmonics
- Help meet IEEE-519 limits
- Absorb voltage/current spikes
- Reduce AC ripple on DC bus
- Reduce dv/dt and dI/dT rates
- Solve spurious overvoltage tripping
- Reduce DC bus transient overvoltage

Catalog Number Explanation

Position	1-4		6	7		9
	1321	–	DC	12	–	1
	a		*b*	*c*		*d*

a

Product	
Code	Type
1321	Power Component

b

Device	
Code	Description
DC	DC Link Choke

c

Current Rating	
Code	Amps
9	9
12	12
18	18
25	25
32	32
40	40

d

Inductance Rating	
Code	Description
1	Each DC Link Choke current rating may have more than one inductance rating. Refer to *Ratings* on page 26 for specific values.
2	
3	
4	

Specifications

Specification	Rating
General	UL-508 component that is recognized (File E196302)
	1000 Volts DC maximum
	For ripple frequency of 300 Hz or 360 Hz
	50 °C temperature rise
	Suitable for 40 °C ambient temperature
	Class B insulation system (130 °C)
	Suitable for ripple current of 10% peak-to-peak
	Touch-safe terminals in many ratings
Storage Temperature (all const.)	-40…+70°C (-40…+158°F)
Humidity	5…95% noncondensing

Special Features

- Solid copper box lug type terminals on most sizes
- Specially constructed and epoxy impregnated for low noise
- Customized ratings also available - contact the factory for custom mounting, inductance, current or ripple requirements

Ratings

Catalog Number	Type	DC Amps	mH	Watts	Lug Size	Torque N•m (lb•in)
1321-DC9-2	Open Style	9	3.22	7	22-14	4.5 (39.8)
1321-DC12-1	Open Style	12	1	5	22-14	4.5 (39.8)
1321-DC12-2	Open Style	12	2.1	7	18-4	20 (177.02)
1321-DC18-1	Open Style	18	0.65	5	18-4	20 (177.02)
1321-DC18-4	Open Style	18	3.75	17	18-4	20 (177.02)
1321-DC25-4	Open Style	25	1.75	13	18-4	20 (177.02)
1321-DC32-1	Open Style	32	0.85	11	18-4	20 (177.02)
1321-DC32-2	Open Style	32	1.62	14	18-4	20 (177.02)
1321-DC32-3	Open Style	32	2.68	21	18-4	20 (177.02)
1321-DC40-2	Open Style	40	0.75	15	18-4	20 (177.02)
1321-DC40-4	Open Style	40	2	29	18-4	20 (177.02)

Approximate Mounting Dimensions

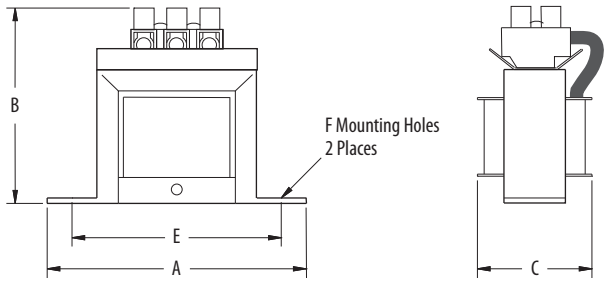

Figure 1

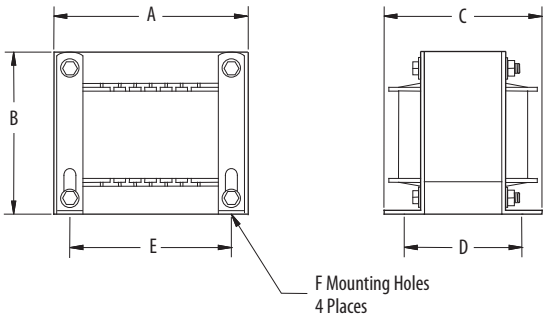

Figure 2

Catalog Number	Figure	Dimensions in mm (in.)					
		A	B	C	D	E	F
1321-DC9-2	1	95.3 (3.75)	82.6 (3.25)	50.8 (2)	(—)	79.5 (3.13)	47.5 DIA. (0.187 DIA.)
1321-DC12-1	1	95.3 (3.75)	82.6 (3.25)	44.5 (1.75)	(—)	79.5 (3.13)	47.5 DIA. (0.187 DIA.)
1321-DC12-2	2	96.8 (3.81)	114.3 (4.5)	71.6 (2.82)	50.8 (2)	79.5 (3.13)	5.2 x 8.3 (0.203 x 0.328)
1321-DC18-1	1	95.3 (3.75)	82.6 (3.25)	50.8 (2)	(—)	79.5 (3.13)	47.5 DIA. (0.187 DIA.)
1321-DC18-4	2	117.6 (4.63)	133.4 (5.25)	101.6 (4)	63.5 (2.5)	95.3 (3.75)	5.2 x 8.3 (0.203 x 0.328)
1321-DC25-4	2	96.8 (3.81)	114.3 (4.5)	76.2 (3)	63.5 (2.5)	79.5 (3.13)	5.2 x 8.3 (0.203 x 0.328)
1321-DC32-1	2	96.8 (3.81)	114.3 (4.5)	84.3 (3.32)	63.5 (2.5)	79.5 (3.13)	5.2 x 8.3 (0.203 x 0.328)
1321-DC32-2	2	117.6 (4.63)	133.4 (5.25)	108.0 (4.25)	76.2 (3)	95.3 (3.75)	5.2 x 8.3 (0.203 x 0.328)
1321-DC32-3	2	117.6 (4.63)	133.4 (5.25)	133.4 (5.25)	101.6 (4)	95.3 (3.75)	5.2 x 8.3 (0.203 x 0.328)
1321-DC40-2	2	96.8 (3.81)	114.3 (4.5)	95.3 (3.75)	76.2 (3)	79.5 (3.13)	5.2 x 8.3 (0.203 x 0.328)
1321-DC40-4	2	165.1 (6.5)	166.4 (6.55)	152.4 (6)	85.9 (3.38)	134.9 (5.31)	7.1 x 13.2 (0.28 x 0.52)

Important User Information

Solid-state equipment has operational characteristics differing from those of electromechanical equipment. Safety Guidelines for the Application, Installation and Maintenance of Solid State Controls (publication SGI-1.1 available from your local Rockwell Automation sales office or online at rok.auto/literature describes some important differences between solid-state equipment and hard-wired electromechanical devices. Because of this difference, and also because of the wide variety of uses for solid-state equipment, all persons responsible for applying this equipment must satisfy themselves that each intended application of this equipment is acceptable.

In no event will Rockwell Automation, Inc. be responsible or liable for indirect or consequential damages resulting from the use or application of this equipment.

The examples and diagrams in this publication are included solely for illustrative purposes. Because of the many variables and requirements associated with any particular installation, Rockwell Automation, Inc. cannot assume responsibility or liability for actual use based on the examples and diagrams.

No patent liability is assumed by Rockwell Automation, Inc. with respect to use of information, circuits, equipment, or software described in this manual.

Reproduction of the contents of this manual, in whole or in part, without written permission of Rockwell Automation, Inc., is prohibited.

Waste Electrical and Electronic Equipment (WEEE)

At the end of life, this equipment should be collected separately from any unsorted municipal waste.

Rockwell Automation Support

Use the following resources to access support information.

Technical Support Center	Find help with how-to videos, FAQs, chat, user forums, and product notification updates.	rok.auto/support
Technical Documentation Center	Quickly access and download technical specifications, installation instructions, and user manuals.	rok.auto/techdocs
Knowledgebase	Access Knowledgebase articles.	rok.auto/knowledgebase
Local Technical Support Phone Numbers	Locate the telephone number for your country.	rok.auto/phonesupport
Literature Library	Find installation instructions, manuals, brochures, and technical data publications.	rok.auto/literature
Product Compatibility and Download Center (PCDC)	Download firmware, associated files (such as AOP, EDS, and DTM), and access product release notes.	rok.auto/pcdc

Documentation Feedback

Your comments help us serve your documentation needs better. If you have any suggestions on how to improve our content, complete the form at rok.auto/docfeedback.

Rockwell Automation maintains current product environmental information on its website at rok.auto/pec.

Allen-Bradley, PowerFlex, Rockwell Automation, and Rockwell Software are trademarks of Rockwell Automation, Inc.
Trademarks not belonging to Rockwell Automation are property of their respective companies.

Rockwell Otomasyon Ticaret A.Ş., Kar Plaza İş Merkezi E Blok Kat:6 34752 İçerenköy, İstanbul, Tel: +90 (216) 5698400

www.rockwellautomation.com

Power, Control and Information Solutions Headquarters

Americas: Rockwell Automation, 1201 South Second Street, Milwaukee, WI 53204-2496 USA, Tel: (1) 414.382.2000, Fax: (1) 414.382.4444
Europe/Middle East/Africa: Rockwell Automation NV, Pegasus Park, De Kleetlaan 12a, 1831 Diegem, Belgium, Tel: (32) 2 663 0600, Fax: (32) 2 663 0640
Asia Pacific: Rockwell Automation, Level 14, Core F, Cyberport 3, 100 Cyberport Road, Hong Kong, Tel: (852) 2887 4788, Fax: (852) 2508 1846

Publication 1321-TD001S-EN-P - October 2022
Supersedes Publication 1321-TD001R-EN-P - May 2021

Copyright © 2022 Rockwell Automation, Inc. All rights reserved. Printed in the U.S.A.