LISTEN.
THINK.
SOLVE.®

Solid-State Temperature Sensors

USER MANUAL

837E

ALLEN-BRADLEY • ROCKWELL SOFTWARE

Rockwell Automation

Important User Information

Because of the variety of uses for the products described in this publication, those responsible for the application and use of this control equipment must satisfy themselves that all necessary steps have been taken to assure that each application and use meets all performance and safety requirements, including any applicable laws, regulations, codes and standards.

The illustrations, charts, sample programs and layout examples shown in the guide are intended solely for purposes of example. Since there are many variables and requirements associated with any particular installation, Rockwell Automation does not assume responsibility or liability (to include intellectual property liability) for actual use based upon the examples shown in this publication.

Rockwell Automation publication SGI-1.1, Safety Guidelines for the Application, Installation and Maintenance of Solid-State Control (available from your local Rockwell Automation sales office), describes some important differences between solid-state equipment and electromechanical devices that should be taken into consideration when applying products such as those described in this publication.

Reproduction of the contents of this copyrighted publication, in whole or part, without written permission of Rockwell Automation, is prohibited.

Throughout this manual we use notes to make you aware of safety considerations:

WARNING	Identifies information about practices or circumstances that can cause an explosion in a hazardous environment, which may lead to personal injury or death, property damage, or economic loss.
IMPORTANT	Identifies information that is critical for successful application and understanding of the product.
ATTENTION	Identifies information about practices or circumstances that can lead to personal injury or death, property damage, or economic loss. Attentions help you identify a hazard, avoid a hazard, and recognize the consequences.
SHOCK HAZARD	Labels may be on or inside the equipment (for example, drive or motor) to alert people that dangerous voltage may be present.
BURN HAZARD	Labels may be on or inside the equipment (for example, drive or motor) to alert people that surfaces may reach dangerous temperatures.

It is recommended that you save this user manual for future use.

Table of Contents

Safety Instructions 2
Designated Use 2
Installation, Commissioning, and Operation 2
Operational Safety. 2
Return 2

Product Identification 3

Installation 4
Dimensions 4
Process Connection 5
Installation Instructions. 6
Wiring 8
Mating Cables. 9

Operation 9
On-site Programming 9
Programming with Personal Computer & ReadWin 2000 . . 18

Accessories 20
Configuration Kit with ReadWin. 20

Troubleshooting 21
Error and Warning Codes 21
Repair. 22
Change Status. 22

Technical Data 23
Display Version. 23
Nondisplay Version. 24
Operating Conditions 24

Safety Instructions

Designated Use

The Bulletin 837E is a temperature switch for measuring and monitoring, displaying and regulating process temperatures. The device has been safely built with state-of-the-art technology and meets the applicable requirements and EC Directives. It can, however, be a source of danger if used incorrectly or for anything other than the designated use.

Installation, Commissioning, and Operation

Only personnel familiar with these types of products and associated machinery should plan or implement the installation, start-up, configuration, and subsequent maintenance of the Bulletin 837E temperature switch. Failure to comply may result in personal injury and/or equipment damage.

Operational Safety

Functional Safety

The Bulletin 837E temperature switches were developed according to the standards IEC 61508 and IEC 61511-1 (FDIS). The 837E version with PNP switch output and additional analog output is equipped with fault detection and fault prevention functions within the electronics and software. This switch version can therefore be used to monitor temperatures in applications up to Safety Integrity Level 2 (SIL2).

Hazardous Areas

The Bulletin 837E is not approved for use in intrinsic safety (hazardous area) applications.

Return

Before returning a device to Rockwell Automation, be sure to remove all fluid residue. This is particularly important if the fluid is a health hazard, e.g. flammable, toxic, caustic, carcinogenic, etc.

ATTENTION

Do not return a measuring device if you are not absolutely certain that all traces of hazardous substances have been removed, e.g. substances which have penetrated crevices or diffused through plastic.

Product Identification

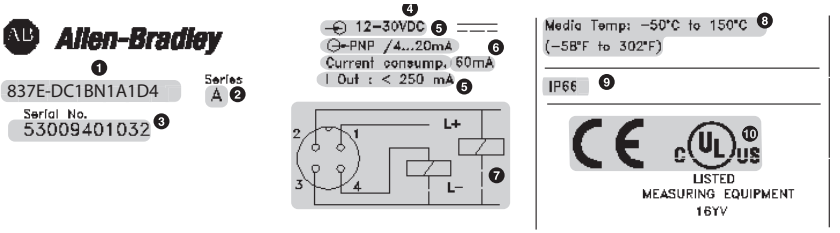

Figure 1 Explanation of the nameplate - see table below

1	Catalog number	6	Current consumption
2	Series letter	7	Wiring diagram
3	Serial number	8	Operating temperature
4	Operating voltage	9	Enclosure Rating/Ingress Protection
5	Output	10	Approvals

Notes:

Specifications and ratings may differ from those shown in Figure 1, depending on the particular model. Refer to the product nameplate or catalog for actual ratings and specifications.

The series number indicates the version of the switch. A change in the series letter does not have any effect on the compatibility—see “Change Status” section.

Installation

Dimensions

Display Version

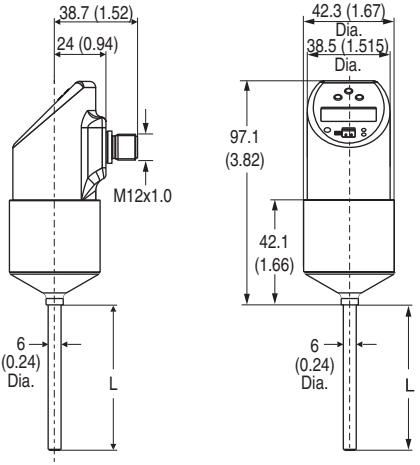

Fig. 1: Dimensions
Version L: 50, 100, or 200 mm
M 12x1 connector as per IEC 60947-5-2

Nondisplay Version

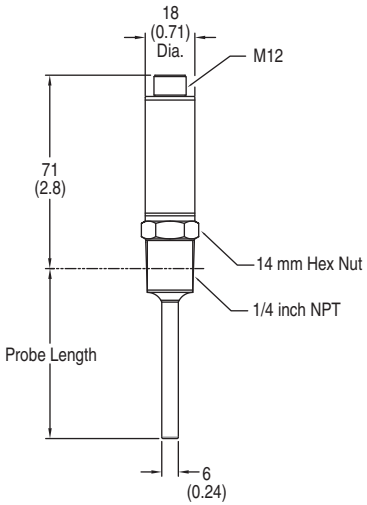

Process Connection

The following table illustrates the versions of 837E.

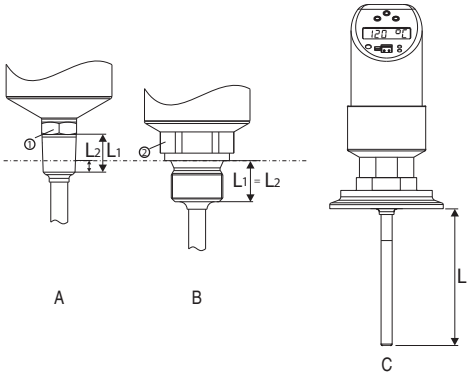

Field of application	Measurement, monitoring, and control of process temperatures		Measurement, monitoring, and control of process temperatures in sanitary processes
Process connection	Item A Version with thread process connection ANSI ¼-in. NPT (① = AF14) and ½-in. NPT (① = AF19)	Item B Version with thread process connection G ¼ (② = AF19) and G ½ A (② = AF27) as per ISO 228	Item C Version with 50.8 mm (2 in.) clamp or 25.4…38.1 mm (1…1.5 in.)
Thread Length L_1	14.3 mm (0.56 in.) 19 mm (0.75 in.)	12 mm (0.47 in.) 14 mm (0.55 in.)	—
Thread Length L_2	5.8 mm (0.23 in.) 8.1 mm (0.32 in.)	—	—
Sensor length L	Version L with 50, 100, or 200 mm (1.97, 3.94, or 7.87 in.)		

Installation Instructions

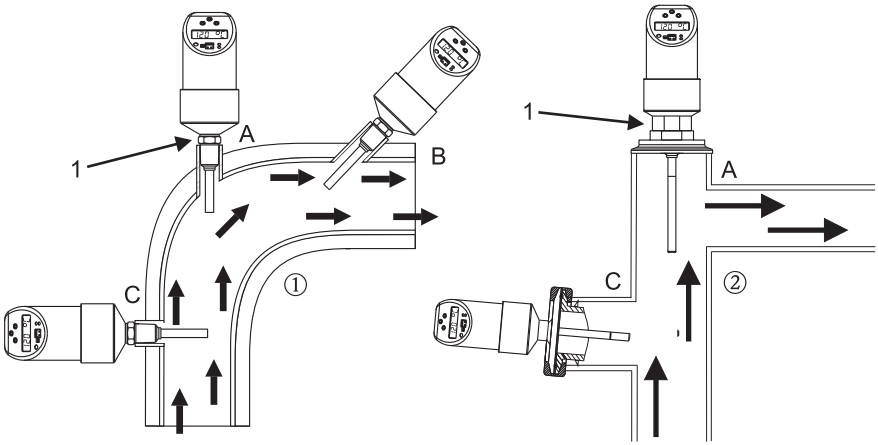

Figure 2 Typical applications of the Bulletin 837E for temperature monitoring in pipes.

① 837E
② 837E for use in sanitary processes

Mounting instructions:

- Item A: Installation at angle pieces, against the direction of flow
- Item B: Installation in smaller pipes, inclined against the direction of flow
- Item C: Installation vertical to the direction of flow (see Figure 2, Item C). Installation of 837E by minimum of 3° inclination because of self draining.
- The digital display can be electronically rotated 180°—see “Operation” section.
- The housing can be rotated up to 310° for optimal readability and ease of wiring.

Installation in Hygienic Processes

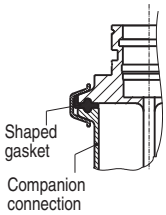

Figure 3 Mounting instructions for installation in hygienic processes

The matches for the process connections as well as the gaskets are not included in the scope of delivery of this assembly.

- Care should be taken by the user in the execution of the welding on the process side:
- Suitable weld material
- Flush welding or with welding radius > 3.2 mm.
- Absence of pits, folds, crevices.
- Ground and polished surface ($R_a \leq 0.8$ µm).

As a general rule, the thermometers should be installed in such a way that does not adversely affect their cleanability.

Wiring

Display Version

The 837E is a DC voltage switch with two PNP outputs or a single PNP output with a 4…20 mA analog output. Both options feature an M12 (micro) connector.

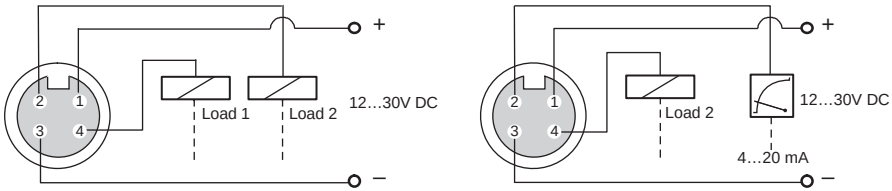

Figure 4 Bulletin 837E with two PNP switch outputs or one PNP output with 4…20mA analog output

Nondisplay Version

The 837E nondisplay version is offered with 4…20 mA analog output with PC-programmable transmitter.

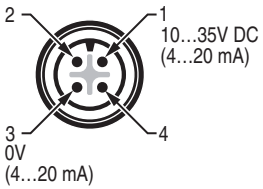

Pin No.	Explanation	Wire Color
1	Power supply 10…35V DC, current output 4…20 mA	Brown
2	Connection of PC configuration cable, shortened pin	White
3	Power supply 0V DC, current output 4…20 mA	Blue
4	Connection of PC configuration cable, shortened pin	Black

Programming cable adaptor 836-NSRT required for programming with ReadWin software kit 836E-NSR.

Mating Cables

2 m (6.5 ft) PVC cable with 4-pin micro (M12 x 1) connector and ratcheted epoxy-coated zinc coupling nut. Catalog Number: 889D-F4AC-2

2 m (6.5 ft) PVC cable with 4-pin micro (M12 x 1) right-angle connector and ratcheted epoxy-coated zinc coupling nut. Catalog Number: 889D-R4AC-2

Note: Other cable lengths are available and shielded cables may be required for some analog output applications – refer to the *On-Machine Connectivity* catalog.

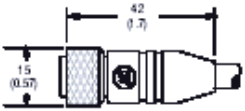

889D-F4AC-2

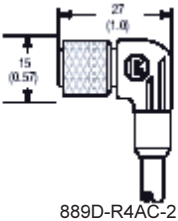

889D-R4AC-2

Operation

On-site Programming

The Bulletin 837E is programmed via three push buttons. The digital display and the light emitting diodes (LEDs) assist in the navigation through the operating menu.

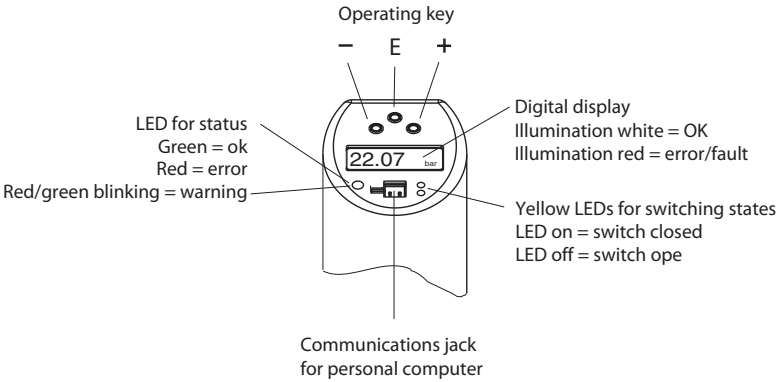

Figure 5 Location of operating keys and display elements

Navigating through the programming menu

Refer to the menu structure in Figure 6 on the following page.

The section labelled A refers to Function groups

The section labelled B refers to the individual Functions within each Function group

The section labelled C identifies the possible values for each function

① To enter the operating menu:

- Press and hold the E key for longer than 3 sec.

② Once in programming mode (BASE will be displayed), toggle between the Function groups with the + and – keys

③ To enter the Function group, press the E key

④ To toggle between functions, repeatedly press the E key (Note that repeatedly pressing the E key will return you to the Function group.

- Then press the E key to return to the "Function" option

⑤ Once on the desired function, use the + or – key to change the function value

⑥ Press E to accept the function value

⑦ To save changes, press and hold the E key for longer than 3 sec.

- Once in SAVE, choose YES or NO with the + or – key
- Confirm with the E key (sensor will go through a start-up routine before entering operating mode)
- Warning code 210 (W210) will appear on the display to indicate a change in configuration (see "Error and warning codes" section).

ATTENTION

Changes take effect only when you choose YES when asked to save the data.

Structure of the programming menu for 2x switch outputs

The chart below illustrates the structure of the programming menu.

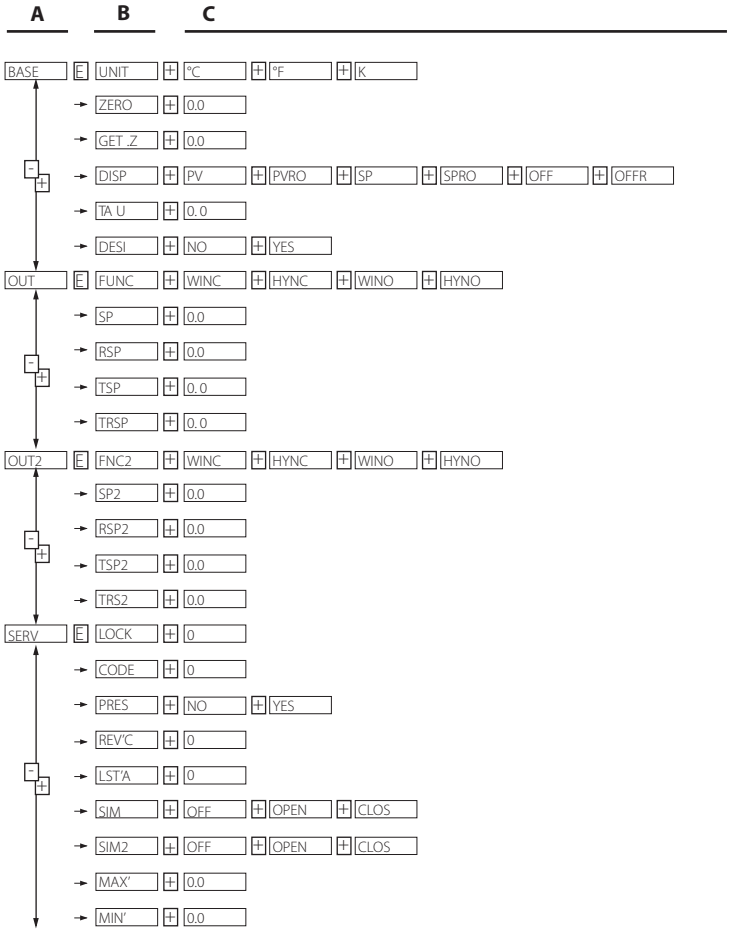

Figure 6 Programming menu: A=function groups, B=functions, C=settings

Structure of the programming menu for 1x switch output and 1x analog output (4…20 mA)

The chart below illustrates the structure of the programming menu.

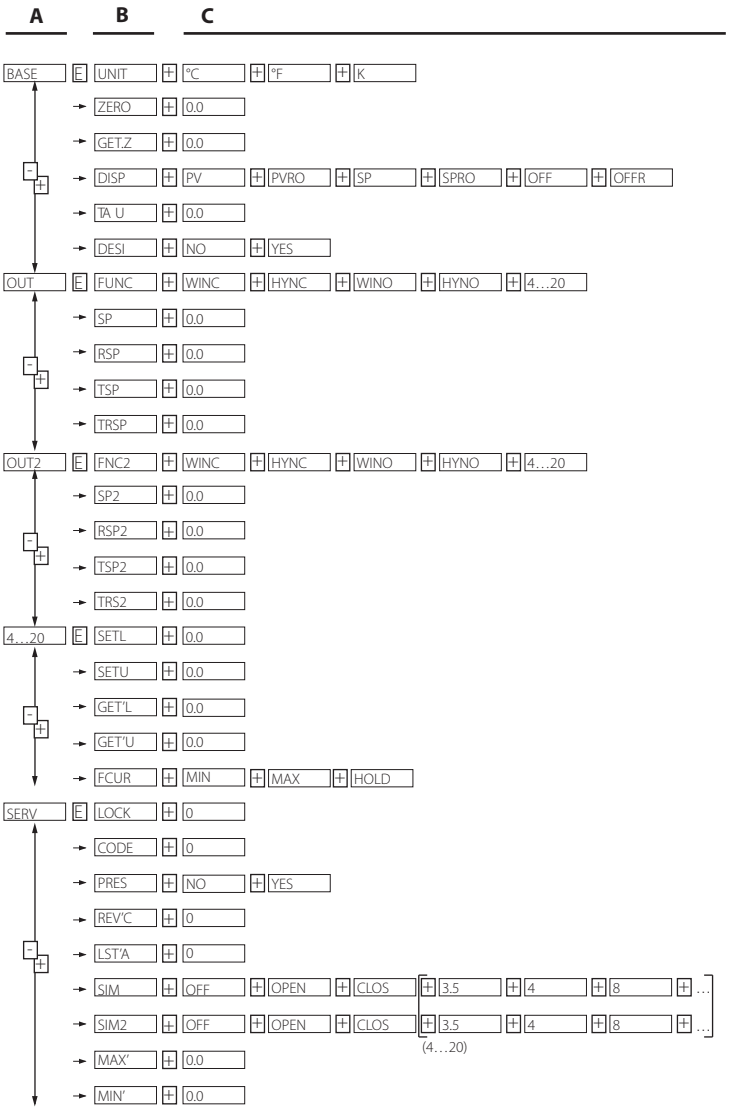

Figure 7 Operating menu: A function groups, B functions, C settings

Basic Settings

Base	Basic Settings			
BASE	UNIT	Unit of measure	°C °F K	Select technical unit: °C °F K
	ZERO	Configure zero point	0.00	Position adjustment: within ±20% of the upper range limit
	GET.Z	Accept zero point	0.00	Current value as zero point (max. ±20% of the upper range limit)
	DISP	Display	PV PVRO SP SPRO OFF OFFR	PV: measured value display PVRO: measured value display rotated 180° SP: set switch point display SPRO: set switch point display rotated 180° OFF: display off OFFR: display off rotated 180°
	TAU	Damping: display value, output signal	0.0	0…40 sec.
	DESI	DESINA	NO YES	Connection in accordance with DESINA guidelines

Output setting

- Hysteresis mode
  The hysteresis mode enables two-point control via a hysteresis. Depending on the temperature T, the hysteresis can be set via the switch point SP and the reset point RSP.
- Window mode
  The window mode allows for the monitoring of a temperature range.
- Analog output mode
  The analog output mode returns a 4…20 mA signal proportional to the measured value. The upper and lower range values can be set by the user.
- Each switch point can be selected as Normally Open (N.O.) or Normally Closed (N.C.)
- Delay times for switch point SP and switch-back point can be set in increments of 1 s. By this means, undesirable temperature peaks of short duration or of high frquency can be filtered out.

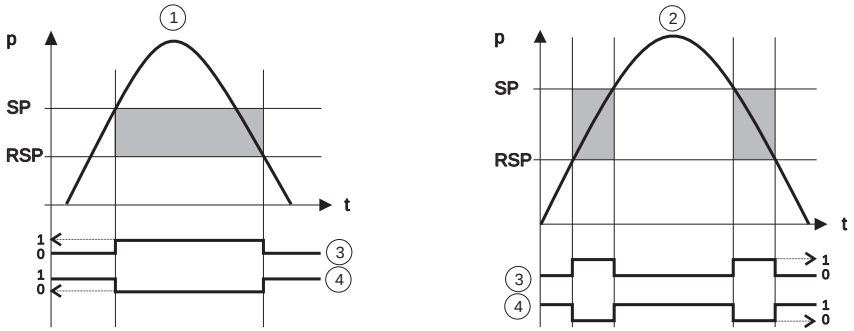

Figure 8

① Hysteresis mode, ② Window mode, ③ Switch status of N.O. contact,
④ Switch status of N.C. contact

SP = switch point; RSP = reset point

OUT/OUT2	Output/Output 2			
OUT OUT2	FUNC FNC2	Switching mode	HYNO HYNC WINO WINC 4 -- 20	HYNO: Hysteresis/NO contact HYNC: Hysteresis/NC contact WINO: Window/NO contact WINC: Window/NC contact 4…20 mA: Analog mode (analog output versions only)
	SP SP2	Switch point value	0.0	Switch point 0.5…100% URL in increments of 0.1 °C
	RSP RSP2	Reset point value	0.0	Reset point 0…99.5% URL in increments of 1 °C
	TSP TSP2	Switch point delay	0.0	Delay time 0…99 sec. in increments of 1 sec.
	TRSP TRS2	Reset point delay	0.0	Delay time 0…99 sec. in increments of 1 sec.
Min. distance between SP and RSP:0.5 °C/K (0.9 °F)				

4…20	Analog Output			
4 -- 20	SETL	Value for 4 mA (LRV)	0.0	Enter lower range value in increments of 0.1 °C
	SETU	Value for 20 mA (URV)	0.0	Enter upper range value in increments of 0.1 °C
	GETL	Temperature applied for 4 mA (LRV)	0.0	Use measured temperature as lower range value
	GETU	Temperature applied for 20 mA (URV)	0.0	Use measured temperature as upper range value
	FCUR	Error current	MIN. MAX' HOLD	Current value in event of error: MIN = ≤ 3.6 mA MAX = ≥ 21.0 mA HOLD = last value

Range of adjustment: LRL = Lower Range Limit; URL = Upper Range Limit; LRV = Lower Range Value; URV = Upper Range Value

Min. distance between SETL and SETU: 20 °C/K (36 °F)

Service Function Setting

SERV	Service Functions			
SERV	LOCK	Security locking/password protection	0	Enable password protection
	CODE	Password/code entry	0	Select code 1…9999 0 = no locking
	PRES	Reset	NO YES	Reset all entries to the factory setting
	REV.C	Revision counter	0	Increases by 1 with each configuration
	LST'A	Last device status	0	Displays the last device status to occur ≠0
	SIM SIM2	Simulation output 1 or 2	OFF OPEN CLOS 3.5	OFF: No simulation OPEN: Switch output open CLOS: Switch output closed 3.5: Simulation values for analog output in mA (3.5/4.0/8.0/12.0/16.0/20.0/21.7)
	MAX'	Max. indicator	0.0	Display of max. measured process value
	MIN.	Min. indicator	0.0	Display of min. measured process value

Programming with Personal Computer & ReadWin 2000

The 837E can also be configured via personal computer and ReadWin software. An additional configuration kit with a conversion cable (Cat. No. 836E-NSR) is required to interface the USB port of the PC to the programming port of the temperature sensor, as shown below.

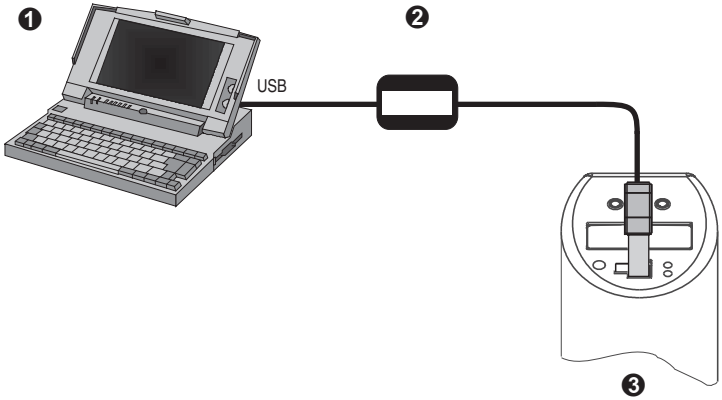

Figure 9 Programming with PC

Personal computer with ReadWin configuration software
Configuration kit (836E-NSR)
Bulletin 837E with programming port

Note: For nondisplay version choose sensor type “PT100” in standard settings. Programming cable adaptor 836E-NSRT is required for 837E nondisplay version when using ReadWin 2000.

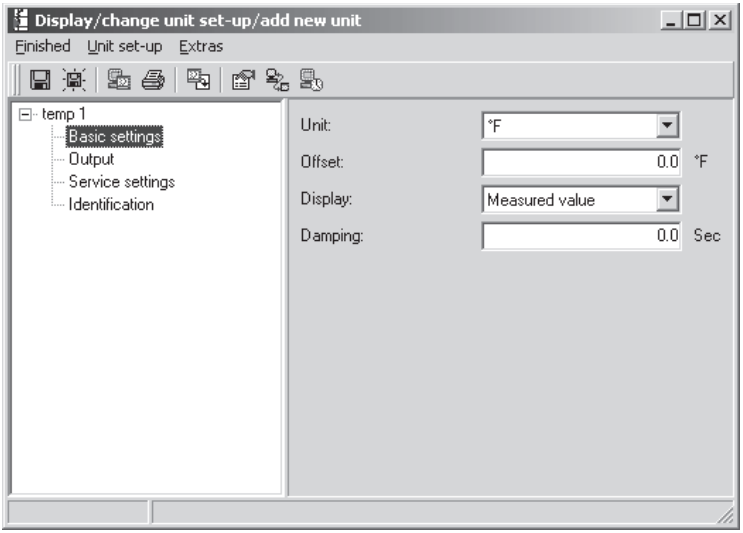

Figure 10 Sensor configuration with ReadWin

Additional Operating Options

In addition to the operating options listed in the “On-site programming” section, the ReadWin configuration software provides an additional function group with further information on the Bulletin 837E:

Function Group	Description
SERV	Number of switch changes for output 1
	Number of switch changes for output 2
	Device status
	Last error to occur

Function Group	Description
INFO	Tag number
	Switch serial number
	Sensing element serial number
	Electronics serial number
	Series number
	Hardware version
	Software version

Accessories

Configuration Kit with ReadWin

The configuration kit (Cat No. 836E-NSR) consists of a software CD and a conversion cable which interfaces the USB port of the PC to the four-pin programming port on the sensor face.

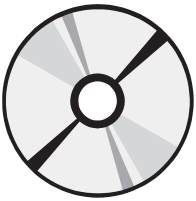

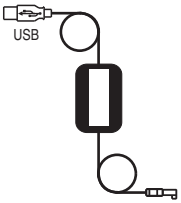

ReadWin® 2000 software is also available free of charge via download from http://ab.rockwellautomation.com, select Product Directory/Sensors & Switches/ Condition Sensors/Pressure Sensors/Solid-State Pressure Switches/Resources. Reference “Other Resources” and select “ReadWin Configurator for Windows™ 2000. zip.

Troubleshooting

Error and Warning Codes

If an error occurs in the electronics, the color of the status LED changes from green to red and the display shows an error or warning code, as outlined below:

- E-code for errors
  In the event of an error message, the measured value is unreliable.
- W-code for warnings
  In the event of a warning, the measured value is still reliable.

Error Codes

Code	Explanation
E011	Device configuration faulty
E012	Error in measurement
E015	Device error (internal)
E019	Power supply has undervoltage/overvoltage
E020	Device error (internal)
E021	Device error (internal)
E022	USB supply voltage
E025	Switching contact 1 is not open, although it should be open
E026	Switching contact 2 is not open, although it should be open
E040	Device error (internal)
E042	Output current cannot be generated. Possible cause: analog output not connected or open circuit
E044	Excessive output current drift (±0.5 mA)

Warning Codes

Code	Explanation
W107	Simulation active
W202	Temperature outside the sensor range
W209	Device start-up
W210	Configuration modified
W212	Sensor signal outside the permitted range
W250	Number of switch cycles exceeded
W270	Short-circuit at output 1
W280	Short-circuit at output 2

Repair

Bulletin 837E temperature switches are not repairable.

Change Status

The release number on the nameplate and in the Operating Instructions indicates the change status of the device: XX.YY.ZZ (example 01.02.01).

XX	Change in the main version. Compatibility no longer provided. Device and Operating Instructions change.
YY	Change in functionality and operation. Compatibility provided. Operating Instructions change.
ZZ	Troubleshooting and internal modifications. Operating Instructions do not change.

Technical Data

Display Version

Power Supply

Supply voltage

- DC voltage version
  12…30 V DC

Current consumption

- Without load < 60 mA, with reverse polarity protection

Power supply failure

- Behavior in case of overvoltage (> 30 V)
  The device works continuously up to 34V DC without any damage. No damage is caused to the device in case of a short-term overvoltage up to 1 kV (as per EN 61000-4-5). If the supply voltage is exceeded, the properties specified are no longer guaranteed.
- Behavior in case of undervoltage
  If the supply voltage drops below the minimum value, the device switches off (status as if not supplied with power = switch open).

Output

Switching capacity

- Switch status ON: $I_a \leq 250$ mA
- Switch status OFF: $I_a \leq 1$ mA
- Switching cycles: > 10,000,000
- Voltage drop PNP: ≤ 2 V
- Overload protection
  Automatic load testing of switching current; output is switched off in case of overcurrent, the switching current is tested again every 0.5 sec.; max. capacitance load: 14 μF for max. supply voltage (without resistive load).

Load (analog output)

- Max. (V_{supply} - 6.5 V) / 0.022 A

Signal on alarm

- Analog output: ≤ 3.6 mA or ≥ 21.0 mA adjustable
  (if setting ≥ 21.0 mA the output is ≥ 21.5 mA)
- Switch outputs: in safe state (switch normally open)

Nondisplay Version

Power Supply

Supply voltage

- 10…35V DC

Current consumption

- 23 mA

Output

Output signal

- 4…20 mA

Maximum load

- Max. (V_{supply} - 10V)/0.023 A

Operating Conditions

- Any orientation

Operating conditions: Environment

- Ambient temperature range: -40…+85 °C (-40…+183 °F)
- Storage temperature: -40…+85 °C (-40…+183 °F)
- Degree of protection: IP65 (optional IP66, depending on used connector)

Operating conditions: Process

- Process temperature limits: -50…+150 °C (-58…+302 °F)

IMPORTANT There are restrictions to the maximum process temperature that can be monitored based on the ambient temperature—see below.

Max. Ambient Temperature	Max. Process Temperature
up to 25 °C (77 °F)	no restriction
up to 40 °C (104 °F)	135 °C (275 °F)
up to 60 °C (140 °F)	120 °C (248 °F)
up to 85 °C (185 °F)	100 °C (212 °F)

- Process pressure limits: p/T load diagram per DIN 43763

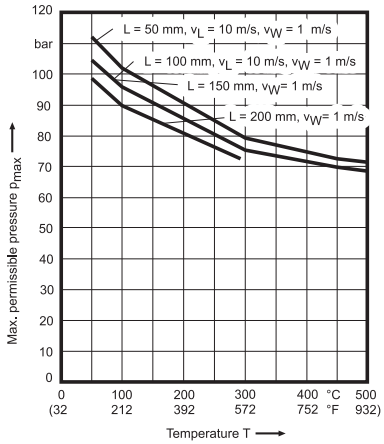

Figure 11 p/T load diagram

L = insertion length
v_L = velocity air
v_W = velocity water

Notes

www.rockwellautomation.com

Power, Control and Information Solutions Headquarters

Americas: Rockwell Automation, 1201 South Second Street, Milwaukee, WI 53204-2496 USA, Tel: (1) 414.382.2000, Fax: (1) 414.382.4444
Europe/Middle East/Africa: Rockwell Automation NV, Pegasus Park, De Kleetlaan 12a, 1831 Diegem, Belgium, Tel: (32) 2 663 0600, Fax: (32) 2 663 0640
Asia Pacific: Rockwell Automation, Level 14, Core F, Cyberport 3, 100 Cyberport Road, Hong Kong, Tel: (852) 2887 4788, Fax: (852) 2508 1846

Publication 75054-004 Ver 10 — December 2014
Supersedes Publication 75054-004 Ver 09 — August 2014
© 2014 Rockwell Automation, Inc. Printed in the USA.