Installation Instructions

Original Instructions

Allen-Bradley

POINT I/O Output Module

Catalog Numbers 1734-OB2, 1734-OB4, 1734-OB4K, 1734-OB8, 1734-OB8K, Series C

Catalog numbers with the suffix 'K' are conformal coated and their specifications are the same as non-conformal coated catalogs.

Topic	Page
Important User Information	2
Environment and Enclosure	3
North American Hazardous Location Approval	4
European Hazardous Location Approval	5
Before You Begin	8
Install the Mounting Base	9
Install the Module	9
Install the Removable Terminal Block	10
Remove a Mounting Base	12
Communicate with the Module	12
Wire the Modules	14
Interpret Status Indicators	18
Specifications	20

Important User Information

Solid-state equipment has operational characteristics differing from those of electromechanical equipment. Safety Guidelines for the Application, Installation and Maintenance of Solid-state Controls (Publication SGI-1.1 available from your local Rockwell Automation sales office or online at http://www.rockwellautomation.com/literature/) describes some important differences between solid-state equipment and hard-wired electromechanical devices. Because of this difference, and also because of the wide variety of uses for solid-state equipment, all persons responsible for applying this equipment must satisfy themselves that each intended application of this equipment is acceptable.

In no event will Rockwell Automation, Inc. be responsible or liable for indirect or consequential damages resulting from the use or application of this equipment.

The examples and diagrams in this manual are included solely for illustrative purposes. Because of the many variables and requirements that are associated with any particular installation, Rockwell Automation, Inc. cannot assume responsibility or liability for actual use based on the examples and diagrams.

No patent liability is assumed by Rockwell Automation, Inc. with respect to use of information, circuits, equipment, or software described in this manual.

Reproduction of the contents of this manual, in whole or in part, without written permission of Rockwell Automation, Inc., is prohibited.

Throughout this manual, when necessary, we use notes to make you aware of safety considerations.

	WARNING: Identifies information about practices or circumstances that can cause an explosion in a hazardous environment, which may lead to personal injury or death, property damage, or economic loss.
	ATTENTION: Identifies information about practices or circumstances that can lead to personal injury or death, property damage, or economic loss. Attentions help you identify a hazard, avoid a hazard and recognize the consequences.
	SHOCK HAZARD: Labels may be on or inside the equipment (for example, drive or motor) to alert people that dangerous voltage may be present.
	BURN HAZARD: Labels may be on or inside the equipment (for example, drive or motor) to alert people that surfaces may reach dangerous temperatures.
IMPORTANT	Identifies information that is critical for successful application and understanding of the product.

Environment and Enclosure

ATTENTION: This equipment is intended for use in a Pollution Degree 2 industrial environment, in overvoltage Category II applications (as defined in EN/IEC 60664-1), at altitudes up to 2000 m (6562 ft) without derating.

This equipment is not intended for use in residential environments and may not provide adequate protection to radio communication services in such environments.

This equipment is supplied as open-type equipment for indoor use. It must be mounted within an enclosure that is suitably designed for those specific environmental conditions that will be present and appropriately designed to prevent personal injury resulting from accessibility to live parts. The enclosure must have suitable flame-retardant properties to prevent or minimize the spread of flame, complying with a flame spread rating of 5V A or be approved for the application if nonmetallic. The interior of the enclosure must be accessible only by the use of a tool. Subsequent sections of this publication may contain more information regarding specific enclosure type ratings that are required to comply with certain product safety certifications.

In addition to this publication, see the following:

- Industrial Automation Wiring and Grounding Guidelines, publication 1770-4.1, for additional installation requirements.
- NEMA Standard 250 and EN/IEC 60529, as applicable, for explanations of the degrees of protection provided by enclosures.

ATTENTION: Read this document and the documents listed in the Additional Resources section about installation, configuration, and operation of this equipment before you install, configure, operate, or maintain this product. Users are required to familiarize themselves with installation and wiring instructions in addition to requirements of all applicable codes, laws, and standards.

Installation, adjustments, putting into service, use, assembly, disassembly, and maintenance are required to be carried out by suitably trained personnel in accordance with applicable code of practice. In case of malfunction or damage, no attempts at repair should be made. The module should be returned to the manufacturer for repair. Do not dismantle the module.

North American Hazardous Location Approval

The Following Information Applies When Operating This Equipment In Hazardous Locations.	**Informations sur l'utilisation de cet équipement en environnements dangereux.**
Products marked "CL I, DIV 2, GP A, B, C, D" are suitable for use in Class I Division 2 Groups A, B, C, D, Hazardous Locations and nonhazardous locations only. Each product is supplied with markings on the rating nameplate indicating the hazardous location temperature code. When combining products within a system, the most adverse temperature code (lowest "T" number) may be used to help determine the overall temperature code of the system. Combinations of equipment in your system are subject to investigation by the local Authority Having Jurisdiction at the time of installation.	Les produits marqués "CL I, DIV 2, GP A, B, C, D" ne conviennent qu'à une utilisation en environnements de Classe I Division 2 Groupes A, B, C, D dangereux et non dangereux. Chaque produit est livré avec des marquages sur sa plaque d'identification qui indiquent le code de température pour les environnements dangereux. Lorsque plusieurs produits sont combinés dans un système, le code de température le plus défavorable (code de température le plus faible) peut être utilisé pour déterminer le code de température global du système. Les combinaisons d'équipements dans le système sont sujettes à inspection par les autorités locales qualifiées au moment de l'installation.
WARNING: **Explosion Hazard –** • Do not disconnect equipment unless power has been removed or the area is known to be nonhazardous. • Do not disconnect connections to this equipment unless power has been removed or the area is known to be nonhazardous. Secure any external connections that mate to this equipment by using screws, sliding latches, threaded connectors, or other means provided with this product. • Substitution of components may impair suitability for Class I, Division 2.	**AVERTISSEMENT:** **Risque d'Explosion –** • Couper le courant ou s'assurer que l'environnement est classé non dangereux avant de débrancher l'équipement. • Couper le courant ou s'assurer que l'environnement est classé non dangereux avant de débrancher les connecteurs. Fixer tous les connecteurs externes reliés à cet équipement à l'aide de vis, loquets coulissants, connecteurs filetés ou autres moyens fournis avec ce produit. • La substitution de composants peut rendre cet équipement inadapté à une utilisation en environnement de Classe I, Division 2.

WARNING: When used in a Class I, Division 2, hazardous location, this equipment must be mounted in a suitable enclosure with proper wiring method that complies with the governing electrical codes.

European Hazardous Location Approval

The following applies to products marked CE Ex

- Are intended for use in potentially explosive atmospheres as defined by European Union Directive 2014/34/EU and has been found to comply with the Essential Health and Safety Requirements relating to the design and construction of Category 3 equipment intended for use in Zone 2 potentially explosive atmospheres, given in Annex II to this Directive.
- Compliance with the Essential Health and Safety Requirements has been assured by compliance with EN 60079-15 and EN 60079-0.
- Are Equipment Group II, Equipment Category 3, and comply with the Essential Health and Safety Requirements relating to the design and construction of such equipment given in Annex II to Directive 2014/34/EU. See the EC Declaration of Conformity at http://www.rockwellautomation.com/global/certification/overview.page for details.
- The type of protection is II 3G Ex nA IIC T4 Gc according to EN 60079-15.
- Comply to Standards EN 60079-0:2012, EN 60079-15:2010, reference certificate number DEMKO04ATEX0330347X.
- Are intended for use in areas in which explosive atmospheres caused by gases, vapors, mists, or air are unlikely to occur, or are likely to occur only infrequently and for short periods. Such locations correspond to Zone 2 classification according to ATEX directive 2014/34/EU.
- May have catalog numbers followed by a “K” to indicate a conformal coating option.

WARNING:

- This equipment is not resistant to sunlight or other sources of UV radiation.
- This equipment shall be mounted in an ATEX/IECEx Zone 2 certified enclosure with a minimum ingress protection rating of at least IP54 (in accordance with EN/IEC 60079-15) and used in an environment of not more than Pollution Degree 2 (as defined in EN/IEC 60664-1) when applied in Zone 2 environments. The enclosure must be accessible only by the use of a tool.
- This equipment shall be used within its specified ratings defined by Rockwell Automation.
- Provision shall be made to prevent the rated voltage from being exceeded by transient disturbances of more than 140% of the peak rated voltage when applied in Zone 2 environments.
- The instructions in the user manual shall be observed.
- This equipment must be used only with ATEX certified Rockwell Automation® backplanes.
- Earthing is accomplished through mounting of modules on rail.
- Devices shall be used in an environment of not more than Pollution Degree 2.

Prevent Electrostatic Discharge

ATTENTION: This equipment is sensitive to electrostatic discharge, which can cause internal damage and affect normal operation. Follow these guidelines when you handle this equipment:

- Touch a grounded object to discharge potential static.
- Wear an approved grounding wriststrap.
- Do not touch connectors or pins on component boards.
- Do not touch circuit components inside the equipment.
- Use a static-safe workstation, if available.
- Store the equipment in appropriate static-safe packaging when not in use.

Special Conditions for Safe Use

ATTENTION:

- This product is grounded through the DIN rail to chassis ground. Use zinc plated chromate-passivated steel DIN rail to assure proper grounding. The use of other DIN rail materials (for example, aluminum or plastic) that can corrode, oxidize, or are poor conductors, can result in improper or intermittent grounding. Secure DIN rail to mounting surface approximately every 200 mm (7.8 in.) and use end-anchors appropriately. Be sure to ground the DIN rail properly. Refer to Industrial Automation Wiring and Grounding Guidelines, publication 1770-4.1, for more information.
- Do not remove or replace an Adapter Module while power is applied. Interruption of the backplane can result in unintentional operation or machine motion.
- Do not discard the end cap. Use this end cap to cover the exposed interconnections on the last mounting base on the DIN rail. Failure to do so could result in equipment damage or injury from electric shock.
- If this equipment is used in a manner not specified by the manufacturer, the protection provided by the equipment may be impaired.

Electrical Safety Considerations

ATTENTION:

- This equipment is certified for use only within the surrounding air temperature range of -20…+55 °C (-4…+131 °F). The equipment must not be used outside of this range.
- Use only a soft dry anti-static cloth to wipe down equipment. Do not use any cleaning agents.

At the end of its life, this equipment should be collected separately from any unsorted municipal waste.

Before You Begin

You can use these Series C POINT I/O™ Output modules with DeviceNet and PROFIBUS adapters. If you are using RSLogix 5000® software, version 11 or higher, you can also use the Series C modules with ControlNet and Ethernet adapters.

Use this diagram to identify the external features of the module. The 1734-OB4 module is shown here.

POINT I/O Output Module

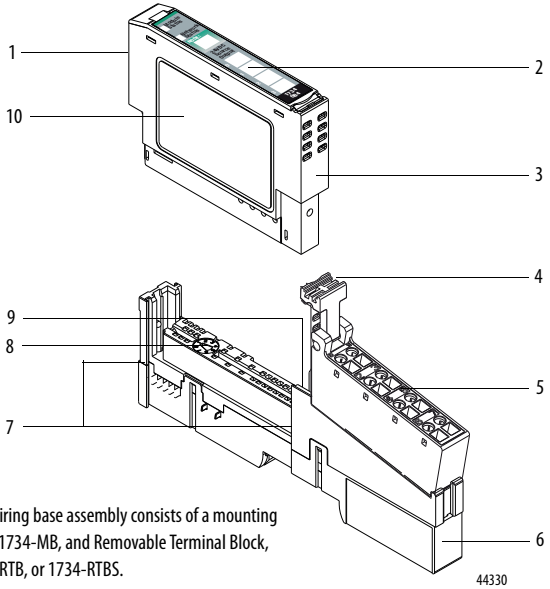

The wiring base assembly consists of a mounting base, 1734-MB, and Removable Terminal Block, 1734-RTB, or 1734-RTBS.

	Description		Description
1	Module locking mechanism	6	Mounting base
2	Slide-in writable label	7	Interlocking side pieces
3	Insertable I/O module	8	Mechanical keying (orange)
4	Removable Terminal Block handle	9	DIN rail locking screw (orange)
5	Removable Terminal Block	10	Module wiring diagram

Install the Mounting Base

To install the mounting base on the DIN rail, proceed as follows:

1. Position the mounting base vertically above the installed units (adapter, power supply, or existing module).
2. Slide the mounting base down allowing the interlocking side pieces to engage the adjacent module or adapter.
3. Press firmly to seat the mounting base on the DIN rail. The mounting base snaps into place.
4. To remove the mounting base from the DIN rail, remove the module and use a small bladed screwdriver to rotate the base locking screw to a vertical position. This releases the locking mechanism. Then lift straight up to remove.

Install the Module

The module can be installed before or after base installation. Make sure that the mounting base is correctly keyed before installing the module into the mounting base. In addition, make sure that the mounting base locking screw is positioned horizontal referenced to the base.

WARNING: When you insert or remove the module while backplane power is on, an electrical arc can occur. This could cause an explosion in hazardous location installations.

Be sure that power is removed or the area is nonhazardous before proceeding. Repeated electrical arcing causes excessive wear to contacts on both the module and its mating connector. Worn contacts may create electrical resistance that can affect module operation.

1. Using a bladed screwdriver, rotate the keyswitch on the mounting base clockwise until the number required for the type of module being installed aligns with the notch in the base.
2. Verify that the DIN rail locking screw is in the horizontal position. You cannot insert the module if the locking mechanism is unlocked.

3. Insert the module straight down into the mounting base.
4. Press to secure. The module locks into place.

Install the Removable Terminal Block

A Removable Terminal Block (RTB) is supplied with your wiring base assembly. To remove, pull up on the RTB handle. This allows the mounting base to be removed and replaced as necessary without removing any of the wirings. To reinsert the Removable Terminal Block, proceed as follows.

WARNING: When you connect or disconnect the Removable Terminal Block (RTB) with field-side power applied, an electrical arc can occur. This can cause an explosion in hazardous location installations.
Be sure that power is removed or the area is nonhazardous before proceeding.

1. Insert the end opposite the handle into the base unit.
   This end has a curved section that engages with the wiring base.
2. Rotate the terminal block into the wiring base until it locks itself in place.
3. If an I/O module is installed, snap the RTB handle into place on the module.

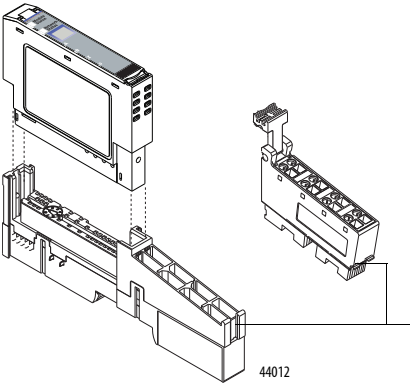

WARNING: For 1734-RTBS and 1734-RTB3S, to latch and unlatch the wire, insert a bladed screwdriver (catalog number 1492-N90 – 3 mm diameter blade) into the opening at approximately 73° (blade surface is parallel with top surface of the opening) and push up gently.

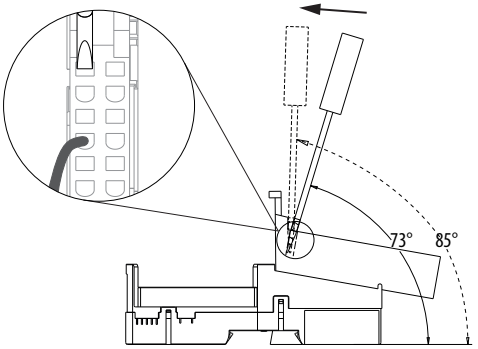

WARNING: For 1734-TOPS and 1734-TOP3S, to latch and unlatch the wire, insert a bladed screwdriver (catalog number 1492-N90 – 3 mm diameter) into the opening at approximately 97° (blade surface is parallel with top surface of the opening) and press in (do not push up or down).

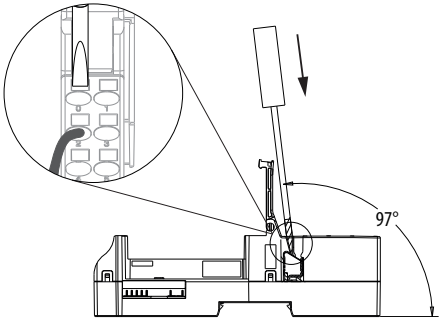

Remove a Mounting Base

To remove a mounting base, you must remove any installed module and the module that is installed in the base to the right. Remove the Removable Terminal Block, if wired.

1. Unlatch the RTB handle on the I/O module.
2. Pull on the RTB handle to remove the Removable Terminal Block.
3. Press the module lock on the top of the module.
4. Pull on the I/O module to remove from the base.
5. Repeat steps 1, 2, 3 and 4 for the module to the right.
6. Use a small bladed screwdriver to rotate the orange base locking screw to a vertical position. This releases the locking mechanism.
7. Lift straight up to remove.

Communicate with the Module

I/O messages are sent to (consumed) and received from (produced) the POINT I/O™ modules. These messages are mapped onto the memory of the processor. This POINT I/O output module consumes 1 byte of I/O data (scanner Tx).

Default Data Map for the 1734-OB2 Output Module

Message size: 1 Byte

	7	6	5	4	3	2	1	0	
Consumes (scanner Tx)	Not used						Ch1	Ch0	Channel state
Where: 0 = off, 1 = on									

Default Data Map for 1734-OB4, 1734-OB4K

Message size: 1 Byte

	7	6	5	4	3	2	1	0	
Consumes (scanner Tx)	Not used				Ch3	Ch2	Ch1	Ch0	Channel state
Where: 0 = off, 1 = on									

Default Data Map for 1734-OB8, 1734-OB8K

Message size: 1 Byte

	7	6	5	4	3	2	1	0	
Consumes (scanner Tx)	Ch7	Ch6	Ch5	Ch4	Ch3	Ch2	Ch1	Ch0	Channel state
Where: 0 = off, 1 = on									

Wire the Modules

To wire the modules, refer to the diagrams and tables.

POINT I/O Output Modules

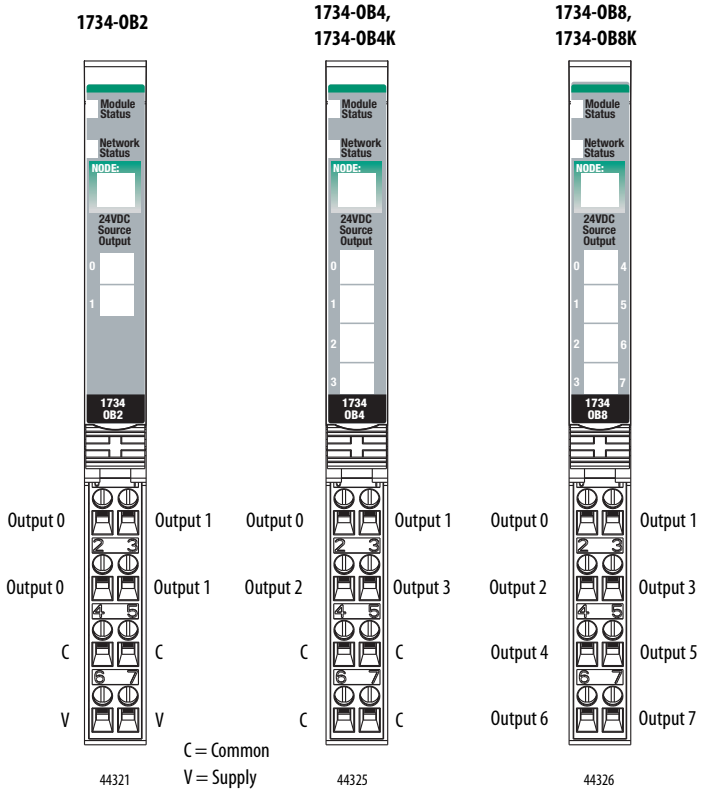

WARNING: If you connect or disconnect wiring while the field-side power is on, an electrical arc can occur. This could cause an explosion in hazardous location installations. Be sure that power is removed or the area is nonhazardous before proceeding.

Output Module 1734-OB2

V=12/24V DC
C = Common
Field power is supplied by the internal power bus

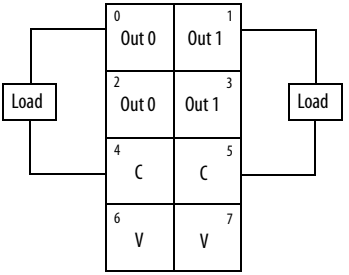

Channel Number	Output Terminal	Common Terminal	Power
Channel 0	0, 2	4	6
Channel 1	1, 3	5	7
Module power is supplied by the internal power bus.			

Output Module 1734-OB4, 1734-OB4K

V=12/24V DC
C = Common
Field power is supplied by the internal power bus

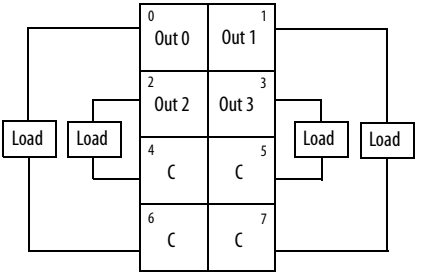

Channel Number	Output Terminal	Common Terminal
Channel 0	0	6
Channel 1	1	7
Channel 2	2	4
Channel 3	3	5
Module power is supplied by the internal power bus.		

Output Module 1734-OB8, 1734-OB8K

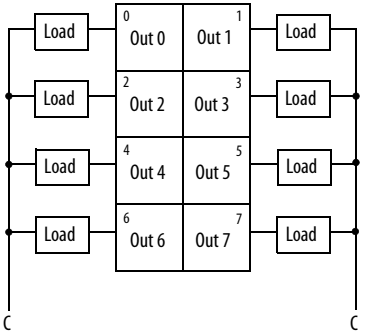

Channel Number	Output Terminal	Common Terminal	Power
Channel 0	0	Common is daisy chained from either a 1734 adapter, 1734-FPD, 1734-EP24DC or from a user-supplied external terminal block.	The 24V DC power for the module is supplied by the internal power bus and originates from the same adapter, 1734-FPD, or 1734-EP24DC as common.
Channel 1	1		
Channel 2	2		
Channel 3	3		
Channel 4	4		
Channel 5	5		
Channel 6	6		
Channel 7	7		
Module power is supplied by the internal power bus.			

WARNING: Do not wire more than two conductors on any single terminal.

Wiring Example for 1734-OB8, 1734-OB8K

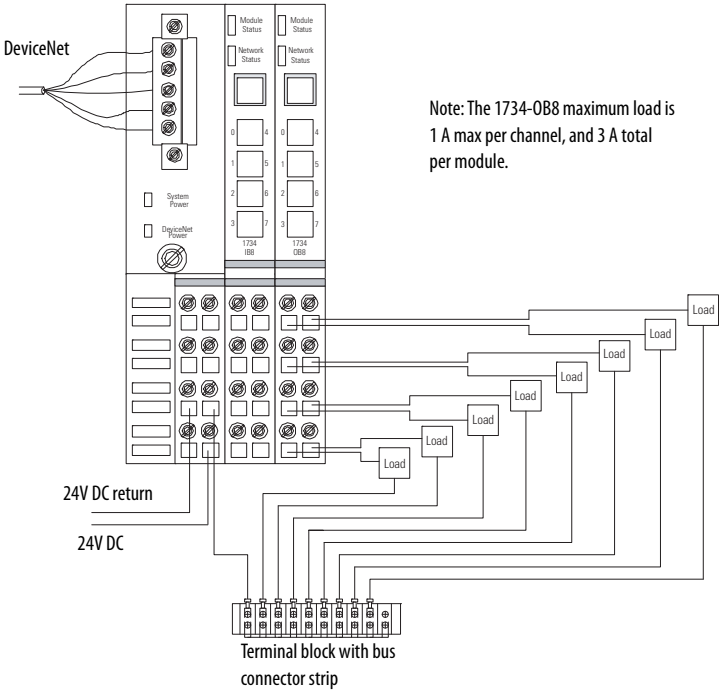

Note: The 1734-OB8 maximum load is 1 A max per channel, and 3 A total per module.

Interpret Status Indicators

See the following diagram and table for information on how to interpret the status indicators.

POINT I/O™ Output Modules

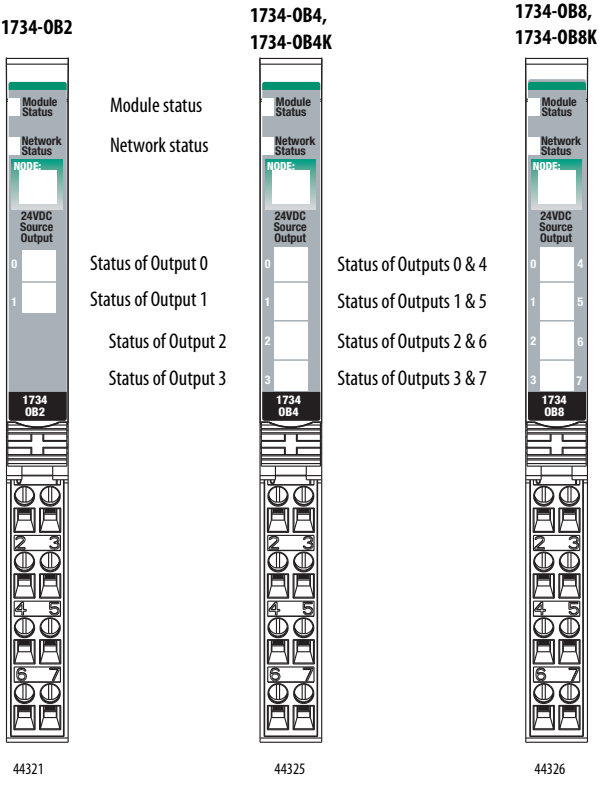

Indicator Status for Modules

	Status	Description
Module status	Off	No power applied to device.
	Green	Device operating normally.
	Flashing green	Device needs commissioning due to missing, incomplete, or incorrect configuration.
	Flashing red	Recoverable fault.
	Red	Unrecoverable fault – may require device replacement.
	Flashing red/green	Device is in self-test mode.
Network status	Off	Device is not online: – Device has not completed dup_MAC-id test. – Device not powered – check Module Status indicator.
	Flashing green	Device is online but has no connections in the established state.
	Green	Device is online and has connections in the established state.
	Flashing red	One or more I/O connections are in timed-out state.
	Red	Critical link failure – failed communication device. Device detected error that prevents it from communicating on the network.
	Flashing red/green	Communication faulted device – the device has detected a network access error and is in communication faulted state. Device has received and accepted an Identity Communication Faulted Request – long protocol message.
I/O status	Off	All outputs inactive.
	Yellow	One or more outputs is active and under control.

Specifications

POINT I/O Output Module – 1734-OB2, 1734-OB4, 1734-OB4K, 1734-OB8, 1734-OB8K

Attribute	1734-OB2	1734-OB4, 1734-OB4K	1734-OB8, 1734-OB8K
Outputs per module	2 (1 group of 2) non-isolated, sourcing	4 (1 group of 4 non-isolated, sourcing	8 (1 group of 8) non-isolated, sourcing
ON-state voltage range, min	10V DC		
ON-state voltage range, nom	24V DC		
ON-state voltage range, max	28.8V DC		
ON-state voltage drop, max	0.2V DC		
ON-state current, min per channel	1.0 mA		
OFF-state voltage, max	28.8V DC		
OFF-state leakage, max	0.5 mA		
Output signal delay, max(1) OFF to ON ON to OFF	 0.1 ms 0.1 ms		
Output current rating	1.0 A per output, 2.0 A max per module	1.0 A per output, not to exceed 3.0 A max per module	
Surge current	2 A for 10 ms, repeatable every 3 s		
Field wiring terminations	0 – Output 0 1 – Output 1 2 – Output 0 3 – Output 1 4 – Common 5 – Common 6 – Supply 7 – Supply	0 – Output 0 1 – Output 1 2 – Output 2 3 – Output 3 4 – Common 5 – Common 6 – Common 7 – Common	0 – Output 0 1 – Output 1 2 – Output 2 3 – Output 3 4 – Output 4 5 – Output 5 6 – Output 6 7 – Output 7

(1) Off–on delay is time from a valid output "On" signal to output energization. On–off delay is time from a valid output "off" signal to output de-energization.

General Specifications

Attribute	1734-OB2	1734-OB4, 1734-OB4K	1734-OB8, 1734-OB8K
Terminal base screw torque	0.8 N•m (7 lb-in.)		
Indicators	2 yellow – output status 2 green/red – module/network status	4 yellow – output status 2 green/red – module/network status	8 yellow – output status 2 green/red – module/network status
Module location	1734-TB or 1734-TBS wiring base assembly		
POINTBus™ current, max @ 5V DC	75 mA		
Power dissipation, max @ 28.8V DC	0.8 W	1.2 W	2.0 W
Thermal dissipation, max @ 28.8V DC	2.7 BTU/hr	4.1 BTU/hr	6.8 BTU/hr
Isolation voltage	50V (continuous), reinforced insulation type Type tested @ 2500V DC for 60 s, field-side to system		
External DC power supply voltage, nom	24V DC		
External DC power voltage range	10...28.8V DC		
External DC power supply current	8 mA	16 mA	32 mA
Dimensions, HxWxD, approx.	56.0 x 12.0 x 75.5 mm (2.21 x 0.47 x 2.97 in.)		
Wiring category(1)	2 – on signal ports		
Wire size	Determined by installed terminal block		
Weight, approx.	32.60 g (1.15 oz)	33.17 g (1.17 oz)	35.4 g (1.25 oz)
North American temp code	T4A		T4
ATEX temp code	–		T4

(1) Use this Conductor Category information for planning conductor routing as described in the appropriate System Level Installation Manual. Also refer to Industrial Automation Wiring and Grounding Guidelines, publication 1770-4.1, for more information.

Environmental Specifications

Attribute	Value
Temperature, operating	IEC 60068-2-1 (Test Ad, operating cold), IEC 60068-2-2 (Test Bd, operating dry heat), IEC 60068-2-14 (Test Nb, operating thermal shock): -20 ...+55 °C (-4...+131 °F)
Temperature, nonoperating	IEC 60068-2-1 (Test Ab, unpackaged nonoperating cold), IEC 60068-2-2 (Test Bb, unpackaged nonoperating dry heat), IEC 60068-2-14 (Test Na, unpackaged nonoperating thermal shock): -40...85 °C (-40...185 °F)
Temperature, surrounding air, max	55 °C (131 °F)
Relative humidity	IEC 60068-2-30 (Test Db, unpackaged damp heat): 5...95% noncondensing
Vibration	IEC 60068-2-6 (Test Fc, operating): 5 g @ 10...500 Hz
Shock, operating	IEC 60068-2-27 (Test Ea, unpackaged shock): 30 g
Shock, nonoperating	IEC 60068-2-27 (Test Ea, unpackaged shock): 50 g
Emissions	IEC 61000-6-4
ESD immunity	IEC 61000-4-2: 6 kV contact discharges 8 kV air discharges
Radiated RF immunity	IEC 61000-4-3: 10V/m with 1 kHz sine-wave 80% AM from 80...2000 MHz 10V/m with 200 Hz 50% pulse 100% AM @ 900 MHz 10V/m with 200 Hz 50% pulse 100% AM @ 1890 MHz 10V/m with 1 kHz sine-wave 80% AM from 2000...2700 MHz
EFT/B immunity	IEC 61000-4-4: ±2 kV at 5 kHz on power ports ±2 kV at 5 kHz on signal ports

Environmental Specifications

Attribute	Value
Surge transient immunity	IEC 61000-4-5: ±1 kV line-line (DM) and ±2 kV line-earth (CM) on signal ports
Conducted RF immunity	IEC 61000-4-6: 10V rms with 1 kHz sine-wave 80% AM from 150 kHz...80 MHz
Enclosure type rating	None (open-style)

Certifications

Certification (When Product Is Marked)(1)	Value
c-UL-us	UL Listed Industrial Control Equipment, certified for US and Canada. See UL File E65584. UL Listed for Class I, Division 2 Group A,B,C,D Hazardous Locations, certified for U.S. and Canada. See UL File E194810.
CE	European Union 2014/30/EU EMC Directive, compliant with: • EN 61326-1; Measurement/Control/Laboratory use, Industrial requirements • EN 61000-6-4; Industrial Emissions • EN 61131-2; Programmable Controllers (Clause 8, Zone A & B) European Union 2011/65/EU RoHS, compliant with: • EN 50581; Technical documentation
RCM	Australian Radiocommunications Act, compliant with: • AS/NZS CISPR 11; Industrial Emissions
Ex	European Union 2014/34/EU ATEX Directive, compliant with: • EN 60079-0:2012 + A11:2013; General Requirements • EN 60079-15:2010; Potentially Explosive Atmospheres, Protection "n" • II 3G Ex nA IIC T4 Gc • DEMKO04ATEX0330347X
KC	Korean Registration of Broadcasting and Communications Equipment, compliant with: • Article 58-2 of Radio Waves Act, Clause 3
EAC	Russian Customs Union TR CU 020/2011 EMC Technical Regulation

(1) See the Product Certification link at http://www.rockwellautomation.com/global/certification/overview.page for Declaration of Conformity, Certificates, and other certification details.

Notes:

Notes:

Notes:

Rockwell Automation Support

Use the following resources to access support information.

Technical Support Center	Knowledgebase Articles, How-to Videos, FAQs, Chat, User Forums, and Product Notification Updates.	www.rockwellautomation.com/knowledgebase
Local Technical Support Phone Numbers	Locate the phone number for your country.	www.rockwellautomation.com/global/support/get-support-now.page
Direct Dial Codes	Find the Direct Dial Code for your product. Use the code to route your call directly to a technical support engineer.	www.rockwellautomation.com/global/support/direct-dial.page
Literature Library	Installation Instructions, Manuals, Brochures, and Technical Data.	www.rockwellautomation.com/literature
Product Compatibility and Download Center (PCDC)	Get help determining how products interact, check features and capabilities, and find associated firmware.	www.rockwellautomation.com/global/support/pcdc.page

Documentation Feedback

Your comments will help us serve your documentation needs better. If you have any suggestions on how to improve this document, complete the How Are We Doing? form at http://literature.rockwellautomation.com/idc/groups/literature/documents/du/ra-du002_-en-e.pdf.

Rockwell Automation maintains current product environmental information on its website at
http://www.rockwellautomation.com/rockwellautomation/about-us/sustainability-ethics/product-environmental-compliance.page.

Allen-Bradley, POINT I/O, Rockwell Automation, Rockwell Software, RSLogix 5000 and TechConnect are trademarks of Rockwell Automation, Inc.
EtherNet/IP is a trademark of ODVA, Inc.
Trademarks not belonging to Rockwell Automation are property of their respective companies.

Rockwell Otomasyon Ticaret A.Ş., Kar Plaza İş Merkezi E Blok Kat:6 34752 İçerenköy, İstanbul, Tel: +90 (216) 5698400

www.rockwellautomation.com

Power, Control and Information Solutions Headquarters

Americas: Rockwell Automation, 1201 South Second Street, Milwaukee, WI 53204-2496 USA, Tel: (1) 414.382.2000, Fax: (1) 414.382.4444
Europe/Middle East/Africa: Rockwell Automation NV, Pegasus Park, De Kleetlaan 12a, 1831 Diegem, Belgium, Tel: (32) 2 663 0600, Fax: (32) 2 663 0640
Asia Pacific: Rockwell Automation, Level 14, Core F, Cyberport 3, 100 Cyberport Road, Hong Kong, Tel: (852) 2887 4788, Fax: (852) 2508 1846

Publication 1734-IN018D-EN-E - January 2019

Supersedes Publication 1734-IN018C-EN-E - April 2013

Copyright © 2019 Rockwell Automation, Inc. All rights reserved.