Installation Instructions

FLEX I/O 8 Input HART Analog Module

Catalog Number 1794-IE8H, Series B

Topic	Page
Important User Information	2
Environment and Enclosure	3
Prevent Electrostatic Discharge	4
North American Hazardous Location Approval	5
European Hazardous Location Approval	6
About the Module	7
Install the Module	7
Wire the Module	9
Ground the Module	11
Input Map	12
Configuration Map	13
Cyclic HART Input Data	17
Input Map (Series A Mode)	23
Configuration Map (Series A Mode)	24
Extended Configuration Data Table (Series A Mode)	26
Field Descriptions	27
Status Indicators	31
Specifications	32

Allen-Bradley • Rockwell Software

Rockwell Automation

Important User Information

Solid state equipment has operational characteristics differing from those of electromechanical equipment. Safety Guidelines for the Application, Installation and Maintenance of Solid State Controls (Publication SGI-1.1 available from your local Rockwell Automation sales office or online at http://literature.rockwellautomation.com) describes some important differences between solid state equipment and hard-wired electromechanical devices. Because of this difference, and also because of the wide variety of uses for solid state equipment, all persons responsible for applying this equipment must satisfy themselves that each intended application of this equipment is acceptable.

In no event will Rockwell Automation, Inc. be responsible or liable for indirect or consequential damages resulting from the use or application of this equipment.

The examples and diagrams in this manual are included solely for illustrative purposes. Because of the many variables and requirements associated with any particular installation, Rockwell Automation, Inc. cannot assume responsibility or liability for actual use based on the examples and diagrams.

No patent liability is assumed by Rockwell Automation, Inc. with respect to use of information, circuits, equipment, or software described in this manual.

Reproduction of the contents of this manual, in whole or in part, without written permission of Rockwell Automation, Inc., is prohibited.

Throughout this manual, when necessary, we use notes to make you aware of safety considerations.

WARNING	Identifies information about practices or circumstances that can cause an explosion in a hazardous environment, which may lead to personal injury or death, property damage, or economic loss.
IMPORTANT	Identifies information that is critical for successful application and understanding of the product.
ATTENTION	Identifies information about practices or circumstances that can lead to personal injury or death, property damage, or economic loss. Attentions help you identify a hazard, avoid a hazard and recognize the consequences.
SHOCK HAZARD	Labels may be on or inside the equipment (for example, drive or motor) to alert people that dangerous voltage may be present.
BURN HAZARD	Labels may be on or inside the equipment (for example, drive or motor) to alert people that surfaces may reach dangerous temperatures.

Environment and Enclosure

ATTENTION

This equipment is intended for use in a Pollution Degree 2 industrial environment, in overvoltage Category II applications (as defined in IEC 60664-1), at altitudes up to 2000 m (6562 ft) without derating.

This equipment is considered Group 1, Class A industrial equipment according to IEC/CISPR 11. Without appropriate precautions, there may be difficulties with electromagnetic compatibility in residential and other environments due to conducted and radiated disturbances.

This equipment is supplied as open-type equipment. It must be mounted within an enclosure that is suitably designed for those specific environmental conditions that will be present and appropriately designed to prevent personal injury resulting from accessibility to live parts. The enclosure must have suitable flame-retardant properties to prevent or minimize the spread of flame, complying with a flame spread rating of 5VA, V2, V1, V0 (or equivalent) if non-metallic. The interior of the enclosure must be accessible only by the use of a tool. Subsequent sections of this publication may contain additional information regarding specific enclosure type ratings that are required to comply with certain product safety certifications.

In addition to this publication, see:

- Industrial Automation Wiring and Grounding Guidelines, for additional installation requirements, Allen-Bradley publication 1770-4.1.
- NEMA Standards 250 and IEC 60529, as applicable, for explanations of the degrees of protection provided by different types of enclosure.

WARNING

If you insert or remove the module while backplane power is on, an electrical arc can occur. This could cause an explosion in hazardous location installations. Be sure that power is removed or the area is nonhazardous before proceeding.

ATTENTION

This product is grounded through the DIN rail to chassis ground. Use zinc plated yellow-chromate steel DIN rail to assure proper grounding. The use of other DIN rail materials (for example, aluminum or plastic) that can corrode, oxidize, or are poor conductors, can result in improper or intermittent grounding. Secure DIN rail to mounting surface approximately every 200 mm (7.8 in.) and use end-anchors appropriately.

Prevent Electrostatic Discharge

ATTENTION

This equipment is sensitive to electrostatic discharge, which can cause internal damage and affect normal operation. Follow these guidelines when you handle this equipment:

- Touch a grounded object to discharge potential static.
- Wear an approved grounding wriststrap.
- Do not touch connectors or pins on component boards.
- Do not touch circuit components inside the equipment.
- Use a static-safe workstation, if available.
- Store the equipment in appropriate static-safe packaging when not in use.

ATTENTION

To comply with the CE Low Voltage Directive (LVD), all connected I/O must be powered from a source compliant with the following:
Safety Extra Low Voltage (SELV) or Protected Extra Low Voltage (PELV).

North American Hazardous Location Approval

The following information applies when operating this equipment in hazardous locations:	**Informations sur l'utilisation de cet équipement en environnements dangereux:**
Products marked "CL I, DIV 2, GP A, B, C, D" are suitable for use in Class I Division 2 Groups A, B, C, D, Hazardous Locations and nonhazardous locations only. Each product is supplied with markings on the rating nameplate indicating the hazardous location temperature code. When combining products within a system, the most adverse temperature code (lowest "T" number) may be used to help determine the overall temperature code of the system. Combinations of equipment in your system are subject to investigation by the local Authority Having Jurisdiction at the time of installation.	Les produits marqués "CL I, DIV 2, GP A, B, C, D" ne conviennent qu'à une utilisation en environnements de Classe I Division 2 Groupes A, B, C, D dangereux et non dangereux. Chaque produit est livré avec des marquages sur sa plaque d'identification qui indiquent le code de température pour les environnements dangereux. Lorsque plusieurs produits sont combinés dans un système, le code de température le plus défavorable (code de température le plus faible) peut être utilisé pour déterminer le code de température global du système. Les combinaisons d'équipements dans le système sont sujettes à inspection par les autorités locales qualifiées au moment de l'installation.

WARNING

EXPLOSION HAZARD -

- Do not disconnect equipment unless power has been removed or the area is known to be nonhazardous.
- Do not disconnect connections to this equipment unless power has been removed or the area is known to be nonhazardous. Secure any external connections that mate to this equipment by using screws, sliding latches, threaded connectors, or other means provided with this product.
- Substitution of components may impair suitability for Class I, Division 2.
- If this product contains batteries, they must only be changed in an area known to be nonhazardous.

AVERTISSEMENT

RISQUE D'EXPLOSION –

- Couper le courant ou s'assurer que l'environnement est classé non dangereux avant de débrancher l'équipement.
- Couper le courant ou s'assurer que l'environnement est classé non dangereux avant de débrancher les connecteurs. Fixer tous les connecteurs externes reliés à cet équipement à l'aide de vis, loquets coulissants, connecteurs filetés ou autres moyens fournis avec ce produit.
- La substitution de composants peut rendre cet équipement inadapté à une utilisation en environnement de Classe 1, Division 2.
- S'assurer que l'environnement est classé non dangereux avant de changer les piles.

ATTENTION

For Class I Division 2 applications, use only Class I Division 2 Listed or Recognized accessories and modules approved for use within 1794 platform.

ATTENTION

Do not remove or replace a Terminal Base unit while power is applied. Interruption of the backplane can result in unintentional operation or machine motion.

European Hazardous Location Approval

European Zone 2 Certification (The following applies when the product bears the Ex or EEx Marking.)

This equipment is intended for use in potentially explosive atmospheres as defined by European Union Directive 94/9/EC and has been found to comply with the Essential Health and Safety Requirements relating to the design and construction of Category 3 equipment intended for use in potentially explosive atmospheres, given in Annex II to this Directive.

Compliance with the Essential Health and Safety Requirements has been assured by compliance with EN 60079-15 and EN 60079-0.

ATTENTION

This equipment is not resistant to sunlight or other sources of UV radiation.

WARNING

- This equipment must be installed in an enclosure providing at least IP54 protection when applied in Zone 2 environments.
- This equipment shall be used within its specified ratings defined by Allen-Bradley.
- Provision shall be made to prevent the rated voltage from being exceeded by transient disturbances of more than 40% when applied in Zone 2 environments.
- This equipment must be used only with ATEX certified backplanes.
- Secure any external connections that mate to this equipment by using screws, sliding latches, threaded connectors, or other means provided with this product.
- Do not disconnect equipment unless power has been removed or the area is known to be nonhazardous.

About the Module

The HART analog modules can be used with ControlNet, Ethernet and Profibus-DP (1794-APBDV1 only) adapters. When using the Series B module with a Series B profile, you must have a ControlNet adapter Revision 5.1 or higher or an Ethernet adapater Revision 4.2 or higher.

For this scenario (Series A profile with a Series B Module), the data maps (input, configuration and extended configuration) are designated as Series A Mode. Note, all other data maps are for a Series B module with a Series B profile.

Only use the series A configuration when replacing a series A module with a series B module. If you access the Series A configuration while using the module as a series B unpredictably operation of the module may occur.

Install the Module

Read this for information about how to install the module. The module must be used with a 1794-TB3G or 1794-TB3GS terminal base unit.

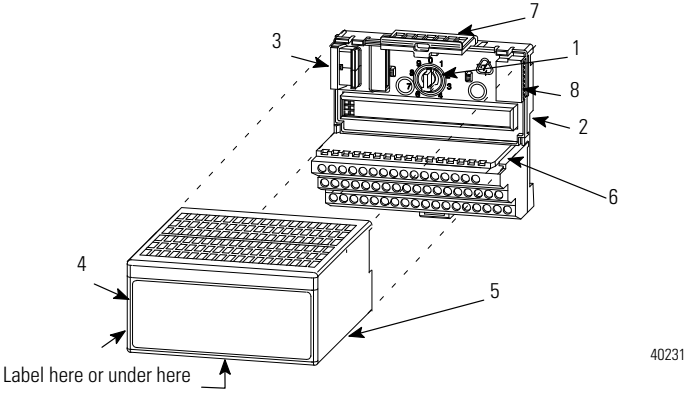

ATTENTION

During mounting of all devices, be sure that all debris (such as metal chips or wire strands) is kept from falling into the module. Debris that falls into the module could cause damage on power up.

ATTENTION Do not remove or replace a Terminal Base unit while power is applied. Interruption of the backplane can result in unintentional operation or machine motion.

IMPORTANT You must disable keying in your profile when replacing a series A module with a series B module.

To install the module on a 1794 terminal base, refer to the figure and complete the following.

1. Rotate the keyswitch (1) on the terminal base (2) clockwise to position 3 as required for this type of module.

IMPORTANT Do not change the position of the keyswitch after wiring the terminal base unit.

2. Make sure the flexbus connector (3) is pushed all the way to the left to connect with the neighboring terminal base or adapter.

IMPORTANT You cannot install the module unless the connector is fully extended.

3. Make sure the pins on the bottom of the module are straight so they align properly with the connector in the terminal base.

4. Position the module (4) with its alignment bar (5) aligned with the groove (6) on the terminal base.

5. Press firmly and evenly to seat the module in the terminal base unit, noting that the module is seated when the latching mechanism (7) is locked into the module.

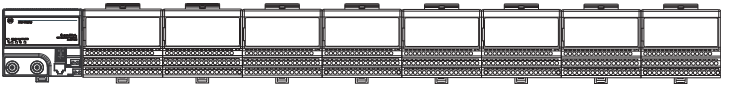

6. Remove cap plug (8) and attach another terminal base unit to the right of this terminal base unit if required.

Wire the Module

WARNING

If you connect or disconnect wiring while the field-side power is on, an electrical arc can occur. This could cause an explosion in hazardous location installations. Be sure that power is removed or the area is nonhazardous before proceeding.

To connect two-wire transmitter devices for 1794-TB3G and 1794-TB3GS bases, refer to the tables and figure and complete the following.

Module Wiring

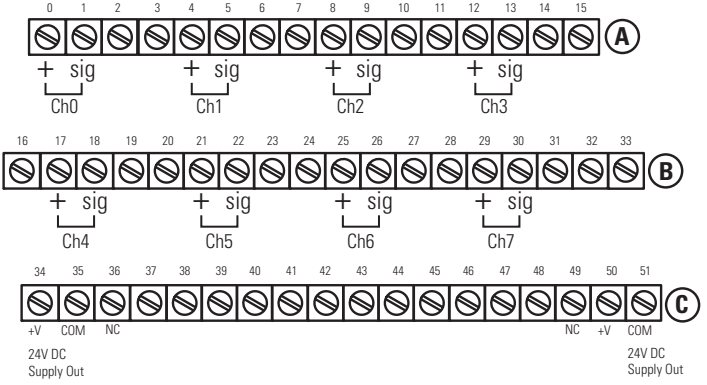

+24V DC = Terminals C-34 and C-50 (1794-TB3G shown)
COM = C-35 and C-51
NC = No connection
For daisy-chaining : Supply in C-34 (+V) and C-35 (COM)
Supply out C-50 (+V) and C-51 (COM)

44861

1. Connect the individual input wiring to (+) terminals (0, 4, 8, 12) on the 0 to 15 row (A) and on the 16 to 33 row (B) (terminals 17, 21, 25, 29) as indicated in the table Wire Connections.

2. Connect the associated input to the corresponding (sig) terminal (1, 5, 9, 13) on the 0 to 15 row (A), and on the 16 to 33 row (B) (terminals 18, 22, 26, 30) for each input as indicated in the table Wire Connections.

3. Refer to the Figure for other configurations.

4. Connect +V DC power to terminal 34 on the 34 to 51 row (C).

5. Connect -V to terminal 35 on the 34 to 51 row (C).

6. If continuing power to the next terminal base unit, connect a jumper from terminal 50 (+V) on this base unit to terminal 34 on the next base unit.
   If continuing common to the next terminal base unit, connect a jumper from terminal 51 (-V) on this base unit to terminal 35 on the next base unit.

ATTENTION

The 1794-IE8H module shall be used only with Listed Allen-Bradley (Rockwell Automation) Power Supply (catalog number 1794-PS13) or Listed Class 2 source.

ATTENTION

To reduce susceptibility to noise, power analog modules and digital modules from separate power supplies.

Wire Connections

Input	Input Source	Input Signal	Input Return	Input	Input Source	Input Signal	Input Return
Input 0	A-0	A-1	A-2	Input 4	B-17	B-18	B-19
Input 1	A-4	A-5	A-6	Input 5	B-21	B-22	B-23
Input 2	A-8	A-9	A-10	Input 6	B-25	B-26	B-27
Input 3	A-12	A-13	A-14	Input 7	B-29	B-30	B-31
+V	Terminals 34 and 50						
-V	Terminals 35 and 51						

Ground the Module

All I/O wiring must use shielded wire. Shields must be terminated external to the module, such as bus bars and shield-terminating feed-throughs.

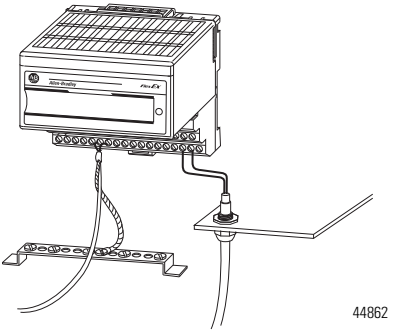

Inputs

Each input can be operated from an analog field device signal.

The channels in these modules are electrically connected to each other and have a common plus-line.

IMPORTANT When interconnecting several lines, you must consider the total accumulated power.

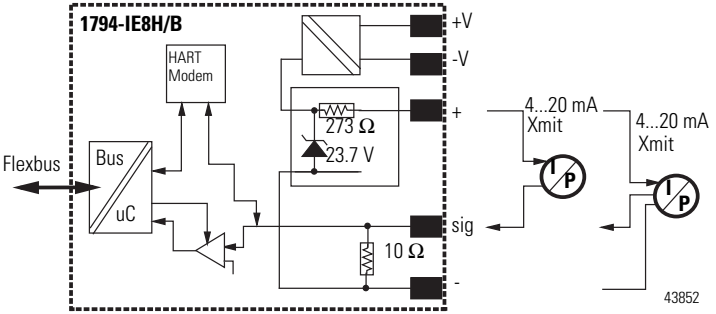

Input Map

Word	Bit 15	14	13	12	11	10	9	8	7	6	5	4	3	2	1	0
0	Input Data Channel 0															
1	Input Data Channel 1															
2	Input Data Channel 2															
3	Input Data Channel 3															
4	Input Data Channel 4															
5	Input Data Channel 5															
6	Input Data Channel 6															
7	Input Data Channel 7															
8	HA Ch 7	HA Ch 6	HA Ch 5	HA Ch 4	HA Ch 3	HA Ch 2	HA Ch 1	HA Ch 0	LA Ch 7	LA Ch 6	LA Ch 5	LA Ch 4	LA Ch 3	LA Ch 2	LA Ch 1	LA Ch 0
9	SA Rem. Ch 7	SA Rem. Ch 6	SA Rem. Ch 5	SA Rem. Ch 4	SA Rem. Ch 3	SA Rem. Ch 2	SA Rem. Ch 1	SA Rem. Ch 0	OR Ch7	OR Ch6	OR Ch5	OR Ch4	OR Ch3	OR Ch2	OR Ch1	OR Ch0
10	Reserved								HR	Reserved			Diagnostic Status			
11	HCF Ch 7	HCF Ch 6	HCF Ch 5	HCF Ch 4	HCF Ch 3	HCF Ch 2	HCF Ch 1	HCF Ch 0	HF Ch 7	HF Ch 6	HF Ch 5	HF Ch 4	HF Ch 3	HF Ch 2	HF Ch 1	HF Ch 0
12	HP Ch 7	HP Ch 6	HP Ch 5	HP Ch 4	HP Ch 3	HP Ch 2	HP Ch 1	HP Ch 0	HC Ch 7	HC Ch 6	HC Ch 5	HC Ch 4	HC Ch 3	HC Ch 2	HC Ch 1	HC Ch 0

Where:
HA = high alarm
LA = low alarm
SA = second alarm
OR = out of range
Res. = reserved
HR = HART rebuilding
HCF = HART current fault
HF = HART communication fault
HP = HART present
HC = HART communication

Configuration Map

Word	Bit 15	14	13	12	11	10	9	8	7	6	5	4	3	2	1	0
0	NF	VR	FE Ch7	FE Ch6	FE Ch5	FE Ch4	Byte Order Group B(1)		HS LEDs	HSI	FE Ch3	FE Ch2	FE Ch1	FE Ch0	Byte Order Group A(1)	
1	HD Ch7	HD Ch6	HD Ch5	HD Ch4	HD Ch3	HD Ch2	HD Ch1	HD Ch0	HHE Ch7	HHE Ch6	HHE Ch5	HHE Ch4	HHE Ch3	HHE Ch2	HHE Ch1	HHE Ch0
2	Data Format Ch3				Data Format Ch2				Data Format Ch1				Data Format Ch0			
3	Data Format Ch7				Data Format Ch6				Data Format Ch5				Data Format Ch4			
4	HART Read Back Threshold Ch1					Digital Filter Ch1			HART Read Back Threshold Ch0					Digital Filter Ch0		
5	HART Read Back Threshold Ch3					Digital Filter Ch3			HART Read Back Threshold Ch2					Digital Filter Ch2		
6	HART Read Back Threshold Ch5					Digital Filter Ch5			HART Read Back Threshold Ch4					Digital Filter Ch4		
7	HART Read Back Threshold Ch7					Digital Filter Ch7			HART Read Back Threshold Ch6					Digital Filter Ch6		
8	Square root Limit Ch7		Square root Limit Ch6		Square root Limit Ch5		Square root Limit Ch4		Square root Limit Ch3		Square root Limit Ch2		Square root Limit Ch1		Square root Limit Ch0	
9	High Alarm Limit Ch0															
10	Low Alarm Limit Ch0															
11	High High Alarm Limit (Remote) Ch0															
12	Low Low Alarm Limit (Remote) Ch0															
13	High Alarm Limit Ch1															
14	Low Alarm Limit Ch1															
15	High High Alarm Limit (Remote) Ch1															
16	Low Low Alarm Limit (Remote) Ch1															
17	High Alarm Limit Ch2															
18	Low Alarm Limit Ch2															
19	High High Alarm Limit (Remote) Ch2															
20	Low Low Alarm Limit (Remote) Ch2															
21	High Alarm Limit Ch3															

Configuration Map

Word	Bit 15	14	13	12	11	10	9	8	7	6	5	4	3	2	1	0
22	Low Alarm Limit Ch3															
23	High High Alarm Limit (Remote) Ch3															
24	Low Low Alarm Limit (Remote) Ch3															
25	High Alarm Limit Ch4															
26	Low Alarm Limit Ch4															
27	High High Alarm Limit (Remote) Ch4															
28	Low Low Alarm Limit (Remote) Ch4															
29	High Alarm Limit Ch5															
30	Low Alarm Limit Ch5															
31	High High Alarm Limit (Remote) Ch5															
32	Low Low Alarm Limit (Remote) Ch5															
33	High Alarm Limit Ch6															
34	Low Alarm Limit Ch6															
35	High High Alarm Limit (Remote) Ch6															
36	Low Low Alarm Limit (Remote) Ch6															
37	High Alarm Limit Ch7															
38	Low Alarm Limit Ch7															
39	High High Alarm Limit (Remote) Ch7															
40	Low Low Alarm Limit (Remote) Ch7															
41	HR Ch7	HR Ch6	HR Ch5	HR Ch4	HR Ch3	HR Ch2	HR Ch1	HR Ch0	HCD Ch7	HCD Ch6	HCD Ch5	HCD Ch4	HCD Ch3	HCD Ch2	HCD Ch1	HCD Ch0

Where
NF: notch filter (50/60 Hz)
FE: fault enable
HS LED: HART status LEDs
HD: HART disable
HR: HART rebuild
HCD: HART CMD3 disable
VR: verify replacement
HSI: HART status inhibit
HHE: HART handheld enable

(1) Group B and Group A “Not used in some controller software”

Byte Order Configuration

Byte Order Group B		Byte Order Group A		Description[1]
Bit 9	Bit 8	Bit 1	Bit 0	
0	0	0	0	Little Endian Format (Default) = All data entries in true Little Endian format.
1	0	1	0	Word Swap = Word swap only values requiring more then one word, for example: 32 bit float values.
0	1	0	1	Byte Swap (reserved for future implementation) = Byte swap all words in data table.
1	1	1	1	Big Endian Format (reserved for future implementation) = All data entries in true Big Endian format.

(1) All other combinations are invalid. Values will Revert to the last valid configuration (in case of original start-up this would be default configuration) and set module Diagnostic Status to "2" configuration failure.

Data Format - Write Words 2 and 3

Data Format	Bits				Format	Signal Range		User Range		Resolution
	15	14	13	12						
	11	10	9	8						
	7	6	5	4		LO	HI	LO	HI	
	3	2	1	0						
0	0	0	0	0	0…20 mA as Milliamps	0.00	22.00	0 (0.000 mA)	22000 (22.000 mA)	0.1% of 0...20 mA
1	0	0	0	1	0…20 mA as %	0.00	22.00	0 (0%)	11000 (110.00%)	0.2% of 0...20 mA
2	0	0	1	0	0…20 mA as √%	0.00	22.00	0 (0%)	10488 (140.88%)	0.19% of 0...20 mA
3	0	0	1	1	0…20 mA as unsigned integer	0.00	20.00	0 (0.000 mA)	65535 (20.000 mA)	0.03% of 0...20 mA
4	0	1	0	0	4…20 mA as mA	2.00	22.00	2000 (2.000 mA)	22000 (22.000 mA)	0.01% of 4...20 mA
5	0	1	0	1	4…20 mA as %	2.00	22.00	-1250 (-12.50%)	11250 (112.50%)	0.16% of 4...20 mA

Data Format - Write Words 2 and 3

Data Format	Bits 15 / 11 / 7 / 3	14 / 10 / 6 / 2	13 / 9 / 5 / 1	12 / 8 / 4 / 0	Format	Signal Range LO	Signal Range HI	User Range LO	User Range HI	Resolution
6	0	1	1	0	4…20 mA as √%	4.00	22.00	0 (0%)	10607 (106.07%)	0.17% of 4...20 mA
7	0	1	1	1	4…20 mA as unsigned integer	4.00	20.00	0 (4 mA)	65535 (20 mA)	0.03% of 4...20 mA
8	1	0	0	0	Not assigned					
9	1	0	0	1						
10	1	0	1	0						
11	1	0	1	1	0...20 mA as A/D count	0.00	22.00	0 (0 mA)	55000 (22 mA)	0.04% of 0...20 mA
12	1	1	0	0	4...20 mA as %	3.60	21.00	-250 (-2.50%)	10625 (106.25%)	0.16% of 4...20 mA
13	1	1	0	1	4...20 mA as %	3.00	21.00	-625 (-6.25%)	10625 (106.25%)	0.16% of 4...20 mA
14	1	1	1	0	4...20 mA as %	2.00	22.00	-1250 (-12.50%)	11250 (112.50%)	0.16% of 4...20 mA
15	1	1	1	1	Not assigned					

Digital Filter

Digital Filter frequency	Decimal Value	Bits 2 / 10	1 / 9	0 / 8	Digital Filter frequency	Decimal Value	Bits 2 / 10	1 / 9	0 / 8
0.5 Hz	7	0	0	0	10 Hz	3	1	0	0
1 Hz	6	0	0	1	Not applicable(1)	2	1	0	1
2 Hz	5	0	1	0	Not applicable	1	1	1	0
4 Hz	4	0	1	1	Not applicable	0	1	1	1

(1) Decimal Values 2, 1 and 0 are not applicable. Values will Revert to the last valid configuration (in case of original start-up this would be default configuration) and set module Diagnostic Status to "2" configuration failure.

Cyclic HART Input Data

The HART input data holds the primary variables for the "live" HART device, and other information gathered during the normal HART scan. Additional "documentary" data is available through the pass through message interface in the device information tables. Pass through messages are defined in detail in the User Manual.

IMPORTANT The HART Input Data for a channel may be zeroes if HART communications is disabled for that channel. For more information on disabling HART communications, refer to the Disable HART communications and HART Disable functions in the Configuration Map table.

HART Input Data

Word	Bit 15	14	13	12	11	10	9	8	7	6	5	4	3	2	1	0
0	Reserved								Ch7 (HART Communications Status)	Ch6	Ch5	Ch4	Ch3	Ch2	Ch1	Ch0
1	Reserved															
2	Ch0 HART Field Device Status								Ch0 HART Comm Status							
3	Reserved								Ch0 HART Loop Status							
4	Ch0 HART Primary Value (IEEE 754-1985 Single-Precision 32 bit floating point)															
5																
6	Ch0 HART Secondary Value (IEEE 754-1985 Single-Precision 32 bit floating point)															
7																
8	Ch0 HART Tertiary Value (IEEE 754-1985 Single-Precision 32 bit floating point)															
9																
10	Ch0 HART Fourth (Quaternary) Value (IEEE 754-1985 Single-Precision 32 bit floating point)															
11																
12	Ch0 Secondary Value Units Code								Ch0 Primary Value Units Code							
13	Ch0 Fourth Value Units Code								Ch0 Tertiary Value Units Code							
14	Ch1 HART Field Device Status								Ch1 HART Communication Status							
15	Reserved								Ch1 HART Loop Status							
16	Ch1 HART Primary Value															
17																

HART Input Data

Word	Bit 15	14	13	12	11	10	9	8	7	6	5	4	3	2	1	0
18	Ch1 HART Secondary Value															
19																
20	Ch1 HART Teritiary Value															
21																
22	Ch1 HART Fourth Value															
23																
24	Ch1 HART Secondary Value Units Code								Ch1 HART Primary Value Units Code							
25	Ch1 HART Fourth Value								Ch1 HART Tertiary Value Units Code							
26	Ch2 HART Field Device Status								Ch2 HART Communication Status							
27	Reserved								Ch2 HART Loop Status							
28	Ch2 HART Primary Value															
29																
30	Ch2 HART Secondary Value															
31																
32	Ch 2 HART Tertiary Value															
33																
34	Ch2 HART Fourth Value															
35																
36	Ch2 HART Secondary Value Units Code								Ch2 HART Primary Value Units Code							
37	Ch2 HART Fourth Value								Ch2 HART Tertiary Value Units Code							
38	Ch3 HART Field Device Status								Ch3 HART Communication Status							
39	Reserved								Ch0 HART Loop Status							
40	Ch3 HART Primary Value															
41																
42	Ch3 HART Secondary Value															
43																
44	Ch3 HART Tertiary Value															
45																
46	Ch3 HART Fourth Value															
47																

HART Input Data

Word	Bit 15	14	13	12	11	10	9	8	7	6	5	4	3	2	1	0
48	Ch3 HART Secondary Value Units Code								Ch3 HART Primary Value Units Code							
49	Ch3 HART Fourth Value								Ch3 HART Tertiary Value Units Code							
50	Ch4 HART Field Device Status								Ch4 HART Communication Status							
51	Reserved								Ch4 HART Loop Status							
52	Ch4 HART Primary Value															
53																
54	Ch4 HART Secondary Value															
55																
56	Ch4 HART Tertiary Value															
57																
58	Ch4 HART Fourth Value															
59																
60	Ch4 HART Secondary Value Units Code								Ch4 HART Primary Value Units Code							
61	Ch4 HART Fourth Value								Ch4 HART Tertiary Value Units Code							
62	Ch5 HART Field Device Status								Ch5 HART Communication Status							
63	Reserved								Ch5 HART Loop Status							
64	Ch5 HART Primary Value															
65																
66	Ch5 Secondary Value															
67																
68	Ch5 Tertiary Value															
69																
70	Ch5 Fourth Value															
71																
72	Ch5 HART Secondary Value Units Code								Ch5 HART Primary Value Units Code							
73	Ch5 HART Fourth Value								Ch5 HART Tertiary Value Units Code							
74	Ch6 HART Field Device Status								CH6 HART Communication Status							
75	Reserved								Ch6 HART Loop Status							
76	Ch6 HART Primary Value															
77																

HART Input Data

Word	Bit															
	15	14	13	12	11	10	9	8	7	6	5	4	3	2	1	0
78	Ch6 Secondary Value															
79																
80	Ch6 Tertiary Value															
81																
82	Ch6 Fourth Value															
83																
84	Ch6 HART Secondary Value Units Code								Ch6 HART Primary Value Units Code							
85	Ch6 HART Fourth Value								Ch6 HART Tertiary Value Units Code							
86	Ch7 HART Field Device Status								CH7 HART Communication Status							
87	Reserved								Ch7 HART Loop Status							
88	Ch7 HART Primary Value															
89																
90	Ch7 Secondary Value															
91																
92	Ch7 Tertiary Value															
93																
94	Ch7 Fourth Value															
95																
96	Ch7 HART Secondary Value Units Code								Ch7 HART Primary Value Units Code							
97	Ch7 HART Fourth Value								Ch7 HART Tertiary Value Units Code							

HART Input Data descriptions

CHn: HART Communication Status	0: HART CMD3 Communication Disabled or No Error	1: HART CMD3 Communication Error between Adapter & Module
CHn: HART Comm Status (HART CMD3 Response first status byte):	Refer to User Manual	
CHn: HART Field Device Status (HART CMD3 Response second status byte):	Refer to User Manual	
Chn: HART Loop Status:		
Bit 0: HART enable	0: Disabled	1: Enabled
Bit 1: Device Connected	0: Not Connected	1: Connected
Bit 2: Response Error	0: No HART message failure	1: Response ended in error
Bit 3: CMD 48 Update	0: CMD 48 not updated	1: CMD 48 updated
Bit 4: HART Loop Tolerance Error	0: No HART Current Fault	1:HART Current Fault
Bit 5: HART Update	0: HART Device information not updated	1: HART Device information updated since last read
Bit 6: HART message	0: No new message	1: HART user message queue has completed a message
Bit 7:		Reserved
Where	PVA = The primary variable for this channel has been acquired. SVA = The secondary variable for this channel has been acquired. TVA = The tertiary variable for this channel has been acquired. FVA = The fourth (quaternary) variable for this channel has been acquired.	

HART Read Back Threshold

HART Read Back	Decimal Value	Bits				
		7	6	5	4	3
		15	14	13	12	11
Disabled	0	0	0	0	0	0
Not applicable[1]	1	0	0	0	0	1
Not applicable	2	0	0	0	1	0
Not applicable	3	0	0	0	1	1
Not applicable	4	0	0	1	0	0
5%	5	0	0	1	0	1
6%	6	0	0	1	1	0
7%	7	0	0	1	1	1
8%	8	0	1	0	0	0
9%	9	0	1	0	0	1
10%	10	0	1	0	1	0
…	…	…	…	…	…	…
30%	30	1	1	1	1	0
31%	31	1	1	1	1	1

(1) 1, 2, 3, and 4 are not applicable. Values between 1 and 4 will lead the IOM to automatically use an internal value of 5%.

Square Root Threshold

Square Root Limit	Decimal Value	Bits		Channel
		1	0	Ch0
		3	2	Ch1
		5	4	Ch2
		7	6	Ch3
		9	8	Ch4
		11	10	Ch5
		13	12	Ch6
		15	14	Ch7
Disabled	0	0	0	
2%	1	0	1	
5%	2	1	0	
10%	3	1	1	

Input Map (Series A Mode)

Word	Bit															
	15	**14**	**13**	**12**	**11**	**10**	**9**	**8**	**7**	**6**	**5**	**4**	**3**	**2**	**1**	**0**
0	Input Data Channel 0															
1	Input Data Channel 1															
2	Input Data Channel 2															
3	Input Data Channel 3															
4	Input Data Channel 4															
5	Input Data Channel 5															
6	Input Data Channel 6															
7	Input Data Channel 7															
8	OA Ch 7	OA Ch 6	OA Ch 5	OA Ch 4	OA Ch 3	OA Ch 2	OA Ch 1	OA Ch 0	UA Ch 7	UA Ch 6	UA Ch 5	UA Ch 4	UA Ch 3	UA Ch 2	UA Ch 1	UA Ch 0
9	RF Ch 7	RF Ch 6	RF Ch 5	RF Ch 4	RF Ch 3	RF Ch 2	RF Ch 1	RF Ch 0	LF Ch7	LF Ch6	LF Ch5	LF Ch4	LF Ch3	LF Ch2	LF Ch1	LF Ch0
10	Reserved								HR	Reserved			Diagnostic Status			
11	HCF Ch 7	HCF Ch 6	HCF Ch 5	HCF Ch 4	HCF Ch 3	HCF Ch 2	HCF Ch 1	HCF Ch 0	HF Ch 7	HF Ch 6	HF Ch 5	HF Ch 4	HF Ch 3	HF Ch 2	HF Ch 1	HF Ch 0
12	HT Ch 7	HT Ch 6	HT Ch 5	HT Ch 4	HT Ch 3	HT Ch 2	HT Ch 1	HT Ch 0	HC Ch 7	HC Ch 6	HC Ch 5	HC Ch 4	HC Ch 3	HC Ch 2	HC Ch 1	HC Ch 0

Where: OA = over alarm
UA = under alarm
RF = remote fault
LF = local fault
HR = HART rebuild
HCF = HART current fault
HF = HART communication fault
HT = HART transmitter list
HC = HART communication

Configuration Map (Series A Mode)

Word	Bit															
	15	14	13	12	11	10	9	8	7	6	5	4	3	2	1	0
0	Reserved		High and Low Error Level 0...3					u/d 0...3	Filter Cutoff 0...3			Data Format 0...3				FM 0...3
1	Sq. Root Thresh.		High and Low Error Level 4...7					u/d 4...7	Filter Cutoff 4...7			Data Format 4...7				FM 4...7

Where: u/d = remote transmitter error up/down
FM = fault mode
Sq. Root Thresh. = square root threshold

Fault Mode (Series A Mode)

Word 0	Bit 00	Fault enable for Channels 0...3
Word 1	Bit 00	Fault enable for Channels 4...7

Where: 0 = disable
1 = enable with wire-off overload

Filter Cutoff Selections (Series A Mode)

Word	Bits			Description
0	07	06	05	Channels 0...3
1	07	06	05	Channels 4...7
	0	0	0	Reserved
	0	0	1	Reserved
	0	1	0	Reserved
	0	1	1	10 Hz (100 ms)
	1	0	0	4 Hz (250 ms)
	1	0	1	2 Hz (500 ms)
	1	1	0	1 Hz (1 s)
	1	1	1	0.5 Hz (2 s)

Remote Transmitter Error Up/Down (Series A Mode)

Word 0	Bit 08	Up/down for Channels 0...3
Word 1	Bit 08	Up/down for Channels 4...7
Where:	0 = up 1 = down	

Data Format (Series A Mode)

Word	Bits				Description
0	04	03	02	01	Channels 0...3
1	04	03	02	01	Channels 4...7
	0	0	0	0	0…22 mA = 0...22,000 with error steps (default)
	0	0	0	1	0…22 mA = 0…110%, with error steps
	0	0	1	0	0…22 mA = 0…104.8%, square root, with error steps
	0	0	1	1	0…20 mA = 0…65,535, unsigned integer, with error steps
	0	1	0	0	2…22 mA, with error steps
	0	1	0	1	2…22 mA = -12.5%…112.5%, with error steps
	0	1	1	0	4…22 mA = 0…106%, square root, with error steps
	0	1	1	1	4…20 mA = 0…65,535, unsigned integer, with error steps
	1	0	0	0	Not assigned
	1	0	0	1	Not assigned
	1	0	1	0	Not assigned
	1	0	1	1	0…22 mA = A/D count, with fixed error
	1	1	0	0	3.6…21 mA = NAMUR NE 43, with fixed error
	1	1	0	1	3…21 mA = -6.25 to 106.25% with fixed error
	1	1	1	0	2…22 mA = -12.5 to 112.5% with fixed error
	1	1	1	1	Not assigned

Error Level 0.1 mA Steps (Series A Mode)

Word	Bits					Description
Word 0	13	12	11	10	09	Error level channels 0...3
Word 1	13	12	11	10	09	Error level channels 4...7
	0	0	0	0	0	Disabled
						0.1 mA * binary valve = remote fault alarm
						Examples
Data Format 2...22 mA -12.5...112.5%						Binary value = 7, 0.1 mA * 7 = 0.7 mA Remote fault alarm at -4.38% or +104.38%
						Binary value = 15, 0.1 mA * 15 = 1.5 mA Remote fault alarm at -9.38% or + 109.38%

The extended configuration data table is accessed (read/write) by using a MSG or CIO instruction. Refer to Field Descriptions on page 27 for more information.

Extended Configuration Data Table (Series A Mode)

Config Word	Bits 15	14	13	12	11	10	9	8	7	6	5	4	3	2	1	0
0	PMI Ch 7	PMI Ch 6	PMI Ch 5	PMI Ch 4	PMI Ch 3	PMI Ch 2	PMI Ch 1	PMI Ch 0	SME Ch 7	SME Ch 6	SME Ch 5	SME Ch 4	SME Ch 3	SME Ch 2	SME Ch 1	SME Ch 0
1	Reserved			HART Read Back Threshold Ch 4...7					HS LED	HS Inht	50/60 Hz	HART Read Back Threshold Ch 0...3				

Where Ch = channel
PMI = primary master inhibit
SME = secondary master enable
HS LED = HART status LEDs
HS Inht = HART status inhibit

Secondary Master Enable (SME)/ Primary Master Inhibit (PMI) (Series A Mode)

	Bits[1]	1 (Default)	2	3	4
PMI	8, 9, 10, 11, 12, 13, 14, 15	0	0	1	1
SME	0, 1, 2, 3, 4, 5, 6, 7	0	1	0	1
HART Smooth Filter		Pulsed	On	Off	On
Rebuild		On	On	Off	Off
HART Read Back		On	On	Off	Off
Primary Master		On	On	Off	Off
Secondary Master		Off	On	Off	On

(1) Where:
Ch 0 - bits 0 and 8; Ch 1 - bits 1 and 9; Ch 2 - bits 2 and 10; Ch 3 - bits 3 and 11
Ch 4 - bits 4 and 12; Ch 5 - bits 5 and 13; Ch 6 - bits 6 and 14; Ch 7 - bits 7 and 15

Field Descriptions

Analog Input Data	Specifies the value of the analog input data from the module. Specific format is controlled by Module Data Format Control parameter.
Overrange Alarm	Alarm signal for input overrange. This signal is always active. Range: 0 = normal, 1 = input overrange
Underrange Alarm	Alarm signal for input underrange. This signal is always active. Range: 0 = normal, 1 = input underrange
Remote Fault Alarm	Alarm from remote transmitter, indicating transmitter difficulties, sensor difficulties, or loop to the sensor is open. If not using a remote transmitter, this alarm can be used as a high-high or low-low alarm. Depending on Data Format, these current values may be indicated by percent, mA, or integer values. Range: 0 = normal, 1 = fault detected
Local Fault Alarm	Alarm indicating the loop to the transmitter, or, if there is no transmitter, the loop is open or shorted. When active, this alarm triggers at 2 mA and 22 mA for open and short respectively. Depending on Data Format, these current values may be indicated by percent, mA, or integer values. Range: 0 = normal, 1 = fault detected

Field Descriptions

HART Rebuild Bit	The HART Rebuild bit will trigger a HART Rebuild on a transition from 0 to 1. The HART Rebuild bit must remain 1 for HART communications to function after the rebuild completes. If the HART Rebuild bit is set to 0, HART communications are disabled.
HART Rebuild Flag	During the time the system is rebuilding the HART table, the HART rebuild flag is set. Range: 0 = normal, 1 = HART rebuilding
HART Communication Fault	When this bit is set (1), it indicates that HART communications are failing on the associated channel. Range: 0 = normal, 1 = HART communication fault
HART Read Back	The HART read back bits show deviations between the analog measured current value on a loop (by the 1794-IE8H) and the digital current (sensed by the HART device on its own) received by the 1794-IE8H during HART communication in the background. This functionality can be turned on by defining a HART read back threshold greater than 0. This functionality is used to recognize loop errors whereby a parasitic current is bypassing the 1794-IE8H. Range: 0 = normal, 1 = HART read back threshold is exceeded.
HART Read Back Threshold	Delivers the percentage value (in steps of 1%) of the threshold for forcing the HART read back indication (input signal deviation HART/Analog) with a 31% maximum deviation. If there is no HART transmitter on the loop or the loop is not in the transmitter list, the function is switched off internally in the I/O module. Range: 0 = disabled, 1…4 = not supported from I/O module (set to 5 internally), 5…31 = percentage threshold data (5…31%).
HART Communication	Range: 0 = normal, 1 = HART communication is currently occurring.
HART Transmitter List	When this bit is set (1), it indicates that a HART field device was found during the rebuild sequence on the associated channel. Range: 0 = transmitter was not found, 1 = HART transmitter was found.
Square Root Threshold	This setting affects all channels using Data Format 2 or 6. It sets low, end-of-scale percent value at which square roots start being reported. Below this level 0% is reported. This compensates for asymptotic values of the square-root function as the input approaches 0. Range: 0 = disabled, 1 = 2%, 2 = 5%, 3 = 10%

Field Descriptions

Extended Configuration[1]	Configuration additions are needed for HART communications in Series A mode. An extended configuration area is provided. This Extended Configuration table is configured by writing a CIO or MSG instruction with the following: Class = 0x7D Instance = Product location on flexbus (Use 1 for the module located next to the adapter.) Attribute = 0x65 Service = Set Attribute Single (0x10)
HART Status Indicators	When this bit is set (1), the status indicators are used for HART diagnostic. Indicator behavior changes to show communication on HART. Each indicator represents a HART loop. Flashing yellow indicates that communication is currently being processed. Solid yellow means that this device is in the transmitter list.
HART Status Inhibit	When this bit is set (1), the HART communication status is not shown in the realtime data table. The appropriate areas are cleared with zeroes. Range: 0 = normal, 1 = inhibit HART
50/60 Hz Filter	Range: 0 = 50 Hz, 1 = 60 Hz

(1) This Extended Configuration area is for the 1794-IE8H in Series A mode only. Do not attempt to use this in Series B mode. For more information on how to use these parameters in Series B mode, See Table Configuration Map on page 13.

Field Transmitter Supply Characteristic

The field transmitter supply can be modeled as a 23.7V source with a 273 Ω series resistance see the Field Transmitter Load Characteristic graph. This provides a simple and useful mechanism to determine transmitter and loop compatibility.

The actual transmitter supply contains three ranges of impedance with the following characteristics:

- The output voltage is ≈23.7V for load currents of 0 mA.
- If the load is more than ≈750 Ω but less than Ω, the transmitter supply is in a constant resistance region (≈273 Ω).
- For load impedance between 0 and ≈750 Ω, the transmitter supply current is controlled by the field device to a maximum of ≈22 mA.

If a fault occurs in the field transmitter supply of any channel, every channel's field transmitter power is shutdown.

The following graph depicts the typical transmitter load characteristic.

Field Transmitter Load Characteristic

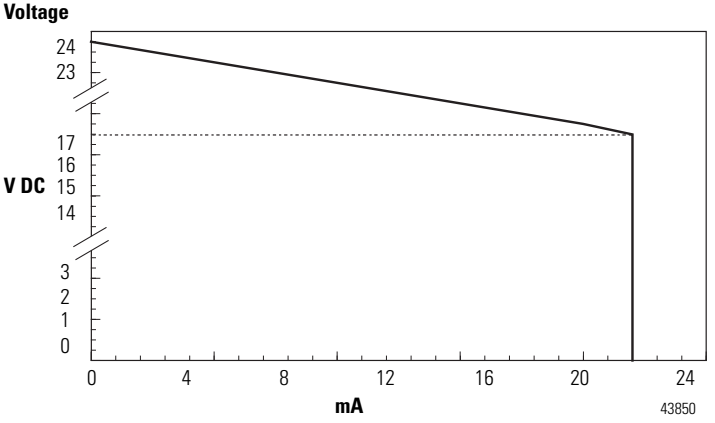

Repair

ATTENTION

This module is not field repairable. Any attempt to open the module will void the warranty. If repair is necessary, return the module to the factory.

Status Indicators

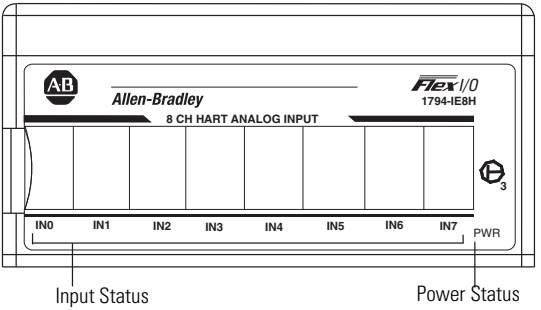

44863

Interpret the Status Indicators

Status	Description
Flashing red	Channel fault - Channel 0 indicator will turn red while power-up check is running
Solid green	Power applied to module
Flashing green	No Flexbus communication - Adapter not powered or faulty connnection
Solid yellow	HART communication functioning normally

Specifications

FLEX I/O 8 Input HART Analog Module - 1794-IE8H, Series B

Attribute	Value
Number of inputs	8 single-ended, non-isolated
Module base	Catalog numbers 1794-TB3G, 1794-TB3GS
Resolution	16 bits
Absolute accuracy	0.1% Full Scale @ 20 °C (68°F)
Accuracy drift with temperature(1)	0.05% Full Scale for 0 °C...55 °C (32...131 °F)
Functional data range	>17V @ 22 mA >23V @ 0 mA
Data format	Configurable
Step response to 99% - current terminal	80 ms
Conversion type	Successive approximation
Input terminals	(Terminals: 0...2; 4...6; 8...10; 12...14; 17...19; 21...23; 25...27; 29...31)
Power Supply (Terminals: 34/50 (+); 35/51 (-))	24V DC nominal using Catalog number 1794-PS13 19.2…31.2V DC (includes 5% ripple)
Indicators	8 red fault indicators 8 yellow channel indicators 1 green power
Isolation voltage	50V (continuous), Basic Insulation Type Routine tested at 850V DC for 1 s, between field side and system No isolation between individual channels
Voltage variation	IEC 61000-4-29: 10 ms interruption on DC supply ports

FLEX I/O 8 Input HART Analog Module - 1794-IE8H, Series B

Attribute	Value
Flexbus current external input[2]	5V DC 80 mA 24V DC 190 mA
Power dissipation, max	3.9 W @ 31.2V DC
Enclosure type rating	None (open-style)
Terminal base screw torque	Determined by installed terminal base
Wire size	Determined by installed terminal base
Wiring category[3]	2 - on signal ports 2 - on power ports
Wire type	Shielded on signal ports
Thermal dissipation, max	13.5 BTU/hr @31.2V DC
Keyswitch position	3
Dimensions (HxWxD), approx.	46.0 x 94.0 x 75.0 mm (1.8 x 3.7 x 2.95 in.)
Weight, approx.	200 g (7.05 oz)
North American temperature code	T4A
IEC Temp Code	T4

(1) Includes offset, gain, nonlinearity. and repeatability error terms.

(2) If 24V DC is removed from the module, input resistance = 10 kΩ.

(3) Use this Conductor Category information for planning conductor routing. Refer to Industrial Automation Wiring and Grounding Guidelines, publication 1770-4.1.

Environmental

Attribute	Value
Temperature, operating	IEC 60068-2-1 (Test Ad, Operating Cold), IEC 60068-2-2 (Test Bd, Operating Dry Heat), IEC 60068-2-14 (Test Nb, Operating Thermal Shock): -20...55 °C (-4...131 °F)
Temperature, nonoperating	IEC 60068-2-1 (Test Ab, Unpackaged Nonoperating Cold), IEC 60068-2-2 (Test Bb, Unpackaged Nonoperating Dry Heat) IEC 60068-2-14 (Test Na, Unpackaged Nonoperating Thermal Shock): –40...85 °C (–40...185 °F)
Relative humidity	IEC 60068-2-30 (Test Db, Unpackaged Damp Heat): 5…95% non-condensing
Vibration	IEC 60068-2-6 (Test Fc, Operating): 2 g @ 10...500 Hz
Shock, operating	IEC 60068-2-27 (Test Ea, Unpackaged Shock): 15 g
Shock, nonoperating	IEC 60068-2-27 (Test Ea, Unpackaged Shock): 15 g
Emissions	CISPR 11: Group 1, Class A (with appropriate enclosure)
ESD Immunity	IEC 61000-4-2: 6 kV contact discharges 8 kV air discharges
Radiated RF Immunity	IEC 61000-4-3: 10V/m with 1 kHz sine-wave 80% AM from 80...2500 MHz 1V/m with 1 kHz sine-wave 80% AM from 2500...2700 MHz

Environmental

Attribute	Value
EFT/B Immunity	IEC 61000-4-4: ±2 kV at 5 kHz on power ports ±2 kV at 5 kHz on signal ports
Surge Transient Immunity	IEC 61000-4-5: ±1 kV line-line(DM) and ±2 kV line-earth(CM) on power ports ±2 kV line-earth(CM) on shielded ports
Conducted RF Immunity	IEC 61000-4-6: 10V rms with 1 kHz sine-wave 80%AM from 10 kHz...80 MHz

Certifications

Certification (when product is marked)[1]	Value
c-UL-us	UL Listed for Class I, Division 2 Group A,B,C,D Hazardous Locations, certified for U.S. and Canada. See UL File E194810.
CE	European Union 2004/108/EC EMC Directive, compliant with: EN 61326-1; Meas./Control/Lab., Industrial Requirements EN 61000-6-2; Industrial Immunity EN 61000-6-4; Industrial Emissions EN 61131-2; Programmable Controllers (Clause 8, Zone A & B)
C-Tick	Australian Radiocommunications Act, compliant with: AS/NZS CISPR 11; Industrial Emissions
Ex	European Union 94/9/EC ATEX Directive, compliant with: EN 60079-15; Potentially Explosive Atmospheres, Protection "n" (II 3 G Ex nA IIC T4 X) EN 60079-0; General Requirements (Zone 2)

(1) See the Product Certification link at http://www.ab.com for Declaration of Conformity, Certificates, and other certification details.

Rockwell Automation Support

Rockwell Automation provides technical information on the Web to assist you in using its products. At http://support.rockwellautomation.com, you can find technical manuals, a knowledge base of FAQs, technical and application notes, sample code and links to software service packs, and a MySupport feature that you can customize to make the best use of these tools.

For an additional level of technical phone support for installation, configuration, and troubleshooting, we offer TechConnect support programs. For more information, contact your local distributor or Rockwell Automation representative, or visit http://support.rockwellautomation.com.

Installation Assistance

If you experience a problem within the first 24 hours of installation, please review the information that's contained in this manual. You can also contact a special Customer Support number for initial help in getting your product up and running.

United States	1.440.646.3434 Monday – Friday, 8 a.m. – 5 p.m. EST
Outside United States	Please contact your local Rockwell Automation representative for any technical support issues.

New Product Satisfaction Return

Rockwell Automation tests all of its products to ensure that they are fully operational when shipped from the manufacturing facility. However, if your product is not functioning and needs to be returned, follow these procedures.

United States	Contact your distributor. You must provide a Customer Support case number (see phone number above to obtain one) to your distributor in order to complete the return process.
Outside United States	Please contact your local Rockwell Automation representative for the return procedure.

Allen-Bradley, Rockwell Automation, TechConnect, and FLEX I/O are trademarks of Rockwell Automation, Inc. Trademarks not belonging to Rockwell Automation are property of their respective companies.

www.rockwellautomation.com

Power, Control and Information Solutions Headquarters

Americas: Rockwell Automation, 1201 South Second Street, Milwaukee, WI 53204-2496 USA, Tel: (1) 414.382.2000, Fax: (1) 414.382.4444
Europe/Middle East/Africa: Rockwell Automation, Vorstlaan/Boulevard du Souverain 36, 1170 Brussels, Belgium, Tel: (32) 2 663 0600, Fax: (32) 2 663 0640
Asia Pacific: Rockwell Automation, Level 14, Core F, Cyberport 3, 100 Cyberport Road, Hong Kong, Tel: (852) 2887 4788, Fax: (852) 2508 1846

Publication 1794-IN108D-EN-P - January 2014 PN-235062

Supersedes Publication 1794-IN108C-EN-P - May 2009 Copyright © 2014 Rockwell Automation, Inc. All rights reserved. Printed in the U.S.A.