FLEX I/O, FLEX I/O-XT, and FLEX Ex

Allen-Bradley

Bulletin 1794 and 1797
1794-SG002G-EN-P

Allen-Bradley • Rockwell Software

Rockwell Automation

Important User Information

Solid state equipment has operational characteristics differing from those of electromechanical equipment. Safety Guidelines for the Application, Installation and Maintenance of Solid State Controls (publication SGI-1.1 available from your local Rockwell Automation sales office or online at http://www.rockwellautomation.com/literature/) describes some important differences between solid state equipment and hard-wired electromechanical devices. Because of this difference, and also because of the wide variety of uses for solid state equipment, all persons responsible for applying this equipment must satisfy themselves that each intended application of this equipment is acceptable.

In no event will Rockwell Automation, Inc. be responsible or liable for indirect or consequential damages resulting from the use or application of this equipment.

The examples and diagrams in this manual are included solely for illustrative purposes. Because of the many variables and requirements associated with any particular installation, Rockwell Automation, Inc. cannot assume responsibility or liability for actual use based on the examples and diagrams.

No patent liability is assumed by Rockwell Automation, Inc. with respect to use of information, circuits, equipment, or software described in this manual.

Reproduction of the contents of this manual, in whole or in part, without written permission of Rockwell Automation, Inc., is prohibited.

Throughout this manual, when necessary, we use notes to make you aware of safety considerations.

	WARNING: Identifies information about practices or circumstances that can cause an explosion in a hazardous environment, which may lead to personal injury or death, property damage, or economic loss.
	ATTENTION: Identifies information about practices or circumstances that can lead to personal injury or death, property damage, or economic loss. Attentions help you identify a hazard, avoid a hazard, and recognize the consequence
	SHOCK HAZARD: Labels may be on or inside the equipment, for example, a drive or motor, to alert people that dangerous voltage may be present.
	BURN HAZARD: Labels may be on or inside the equipment, for example, a drive or motor, to alert people that surfaces may reach dangerous temperatures.
IMPORTANT	Identifies information that is critical for successful application and understanding of the product.

Allen-Bradley, CompactLogix, ControlLogix, FLEX, FLEX Ex, FLEX I/O-XT, Integrated Architecture, PanelView, Rockwell Automation, Rockwell Software, and TechConnect are trademarks of Rockwell Automation, Inc.

CIP, ControlNet, DeviceNet, and Ethernet/IP are trademarks of ODVA, Inc.

Trademarks not belonging to Rockwell Automation are property of their respective companies.

Summary of Changes

New and Updated Information 7

Section 1.1

About the FLEX I/O and FLEX Ex I/O Systems

1794 FLEX I/O Overview 9
1794 FLEX I/O XT Overview 11
General FLEX I/O and FLEX I/O XT Specifications 11
Specify a FLEX I/O or FLEX I/O XT System 13

Section 1.2

Select FLEX I/O Communication Adapters

CIP Network Infrastructure. 15
Select a Network 16
- EtherNet/IP Network 16
- ControlNet Network 18
- DeviceNet Network 19
- DeviceNet Communication 20
- Other Networks – Remote I/O 21

Section 1.3

Select FLEX I/O Modules

Digital I/O Modules. 23
- Features. 23

Select Input Filter Times for Digital Modules. 26
Modules Specifications 27
- FLEX I/O Digital AC Input Modules. 27
- FLEX I/O Digital AC Output Modules 29
- FLEX I/O Digital DC Input Modules 31
- FLEX I/O Digital DC Output Modules. 34
- FLEX I/O Digital DC Protected Output Modules 36
- FLEX I/O Digital DC Diagnostic Modules. 38
- FLEX I/O Digital DC Combination Modules 41
- FLEX I/O Digital Contact Output Modules (Relay) 42

FLEX I/O Analog, Thermocouple and RTD Modules. 44
Modules Specifications 46
- FLEX I/O Analog Input Modules. 46
- 1794-IE8 and 1794-IE8XT Analog 8 Input Module 47
- 1794-IE8H HART Enabled Analog 8 Input Module 48
- 1794-IE12 Analog 12 Input Module 48
- 1794-IF4I and 1794-IF4IXT Isolated Analog 4 Input Module . . . 49
- 1794-IF4ICFXT FLEX XT I/O Isolated Input Analog Module . . 50
- 1794-IF8IH HART Enabled Analog 8 Input Module 52
- 1794-IR8 RTD Input Module 53
- 1794-IRT8 and 1794-IRT8XT Thermocouple/RTD Input Module 54
- 1794-IT8 Thermocouple/mV Input Module 56
- 1794-IE8XOE4 8 Input/4 Output Analog Combination Module 58

1794-IE4XOE2 and 1794-IE4XOE2XT 4 Input/2 Output Analog Combination Modules 59
1794-IF2XOF2I and 1794-IF2XOF2IXT 2 Input/2 Output Isolated Analog Combination Module 60
FLEX I/O Analog Output Modules 61
1794-OE4 and 1794-OE4XT Analog 4 Output Module 62
1794-OE8H HART Enabled Analog 8 Output Module 63
1794-OE12 Analog 12 Output Module 64
1794-OF4I and 1794-OF4IXT Isolated Analog 4 Output Module 65
1794-OF8IH HART Isolated Analog 8 Output Module 66
FLEX I/O Counter Modules 67
1794-IJ2 and 1794-IJ2XT 24V DC Input Frequency Module 69
1794-VHSC 2 Channel Very High Speed Counter Module 71
1794-ID2 2 Input Pulse Counter Module 73
1794-IP4 4 Input Pulse Counter Module 74

Section 1.4

Select a FLEX I/O Terminal Base Unit

General Specification Comparison 75

Section 1.5

Select a FLEX I/O Power Supply

Power Supply Definitions 77
Power Requirements and Transformer Sizing 78

Section 2.1

About the FLEX Ex I/O Systems

1797 FLEX Ex I/O Overview 81
Entity-Based Architecture 85
Hazardous Area Designation 85
Class Designation 85
Division/Zone Designations 85
Gas/Dust Groups 85
Specify a FLEX Ex System 87

Section 2.2

Select FLEX Ex I/O Communication Adapters and Distribution Method

1797-RPA ControlNet Ex Coax Drop Repeater Module 91
1797-RPFM ControlNet Ex 3 km Fiber Media Port Adapter 92
1797-BCNR Coax Barrier Module 92

Section 2.3

Select FLEX Ex I/O Modules

Digital I/O Modules 97
Features 97
Modules Specifications 98
1797-IBN16 16 Point Non-isolated NAMUR Input Module 98

1797-OB4D 24V DC 4 Point Non-isolated Source Output Module 99
Analog Modules 101
Module Specifications 102
1797-IE8, 1797-IE8H (HART), and 1797-IE8NF (with Noise Filter) 8 Point 16-bit Single-ended Non-isolated Analog Input Modules 102
1797-IRT8 8 Point 16-bit Non-isolated RTD Thermocouple/mV Input Module 104
HART Interface Modules 105
FLEX Ex I/O Analog Output Modules 106
1797-OE8 and 1797-OE8H (HART) 8 Point 13-bit Single-ended Non-isolated Analog 8 Output Module 106
Counter I/O Module 108
1797-IJ2 2 Input Frequency Counter Module 108

Section 2.4

Select a FLEX Ex I/O Terminal Base Unit

Terminal Base Wiring Diagrams 111
1797-TB3 and 1797-TB3S 111

Section 2.5

Select a FLEX Ex I/O Power Supply

E Type Power Supply 114
N Type Power Supply 114
Understanding System Planning 114
Assigning Power Supplies 116
Hazardous Area Installation 117
1797-PS1N and 1797-PS1E 85V...253V AC In/Quad-Ex DC Out 118
1797-PS2N2 and 1797-PS2E2 24V DC In/Quad-Ex DC Out 118

Section 3.1

Mount the FLEX System

Section 3.2

Select Optional Accessories

1794-CE1 and 1794-CE3 Extender Cables 123
1794-NM1 FLEX I/O Mounting Kit 123
1492-EA35 DIN Rail Locks 124
1794-LBL FLEX I/O Label Kit 124
1794-N2 FLEX I/O Dummy Filler Module 124
1794-CJC2 124
1797-BOOT ControlNet BNC Boot 125
1797-INS Trunk Insulator and 1797-EXMK Marking Kit 125
ControlNet Ex Taps 126

Related Documentation

Section 4.1

FLEX I/O and FLEX I/O-XT 129
FLEX Ex I/O 134

This manual contains new and updated information. Changes throughout this revision are marked by change bars, as shown to the right of this paragraph.

New and Updated Information

This table contains the additions made to this revision.

Topic	Page
Added temperature, operating data to all 1794 product sections and corrected Operating Temperature information from 185 °F to 158 °F	Chapters 1, 2, 3, and 7
Updated general FLEX I/O and FLEX I/O-XT specifications table	11
Updated table on discontinued catalogs	16
Corrected 1794-OB1D module type information	25
Updated analog I/O module summary table	45
Updated FLEX I/O Analog input comparison table	46
Added new section for 1794-IF4ICFXT	50
Updated Common Terminal Base Characteristics table	75
Updated general specifications comparison table for each FLEX I/O terminal base unit	75
Updated 1794 FLEX I/O and FLEX IO-XT related publications table	129
Updated 1797 FLEX Ex I/O related publications table	134

Notes:

About the FLEX I/O and FLEX Ex I/O Systems

1794 FLEX I/O Overview

FLEX™ I/O offers:

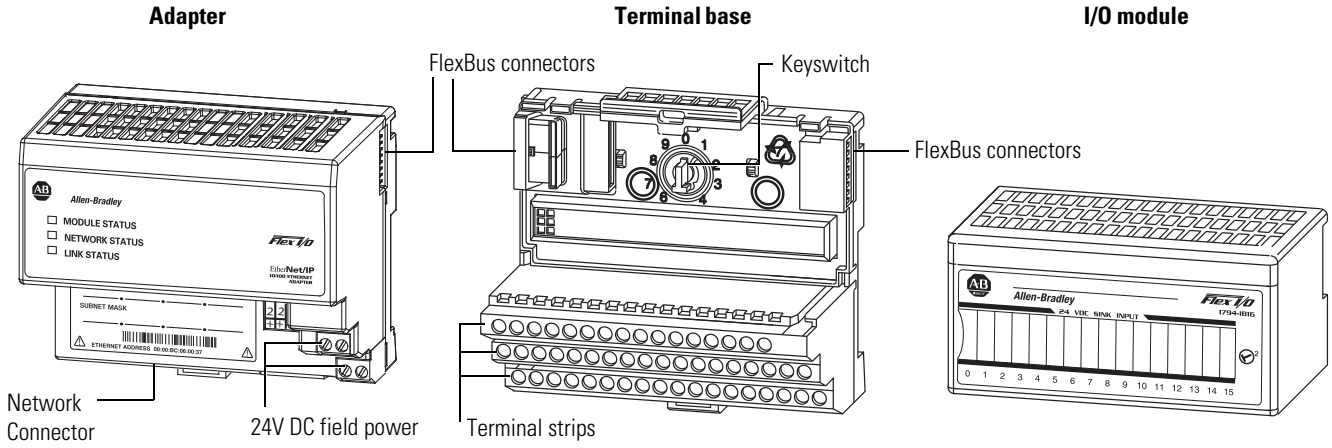

FLEX I/O is a Distributed I/O System that connects to several Networks including EtherNet/IP™, ControlNet®, and DeviceNet®.

Flexible, low-cost, modular I/O for distributed applications. FLEX I/O offers all the functions of larger, rack-based I/O without the space requirements.

Independently select the I/O, termination style, and network to meet your application needs.

Two separate connection terminals for field power let you daisy chain power connections to adjacent terminal bases.

One adapter communicates with up to eight I/O modules. Allows connection to:

- 256 digital input/output points, or
- 96 analog input/output points, or
- mix of I/O to meet your needs.

Modularity of FLEX I/O system provides choice of network and ease of expansion. The wiring terminations are done almost entirely on the terminal base. Terminal base termination selection includes screw-clamp, spring-clamp, and cage-clamp to wire directly to 2-, 3-, or 4-wire devices. Additional options of D-shell, knife disconnect, and fused terminal bases are available.

Adjustable keyswitch helps prevent incorrect module insertion into a preconfigured terminal base.

Terminal bases can be exchanged without moving other bases in your system.

If desired, connect individual power supplies to each base to isolate modules. Plug the I/O module into the terminal base to connect the I/O bus and field devices.

Remove and insert modules under power. No direct wiring to the module enables you to change modules without disturbing field wiring or system power.

Mix and match I/O modules. There is a wide variety of digital, analog, and specialty modules.

Each FLEX I/O system contains at least one adapter, one terminal base, and one I/O module.

You can power the system with a FLEX power supply (1794-PS13 or -PS3), a 1606 switched mode power supply, or any other compatible power source. Use the terminal block on the terminal base to wire your field devices directly. Wiring directly saves you:

- installation and testing time
- multiple, long wiring runs and external terminal blocks
- control cabinet panel space

FLEX I/O provides additional savings if system problems develop. Combining your field-wiring terminations and the I/O interface into the same location saves you time and money by making your system easier to maintain and troubleshoot. Additionally, the full-featured FLEX I/O system lets you, in non-hazardous location, remove, and insert modules under backplane power without disrupting your system.

Your FLEX I/O system can communicate on EtherNet/IP, ControlNet, DeviceNet, and many other open networks including, but not limited, to Remote I/O and PROFIBUS DP.

Adapters and other components are available for adding to your system as your specific application requirements change.

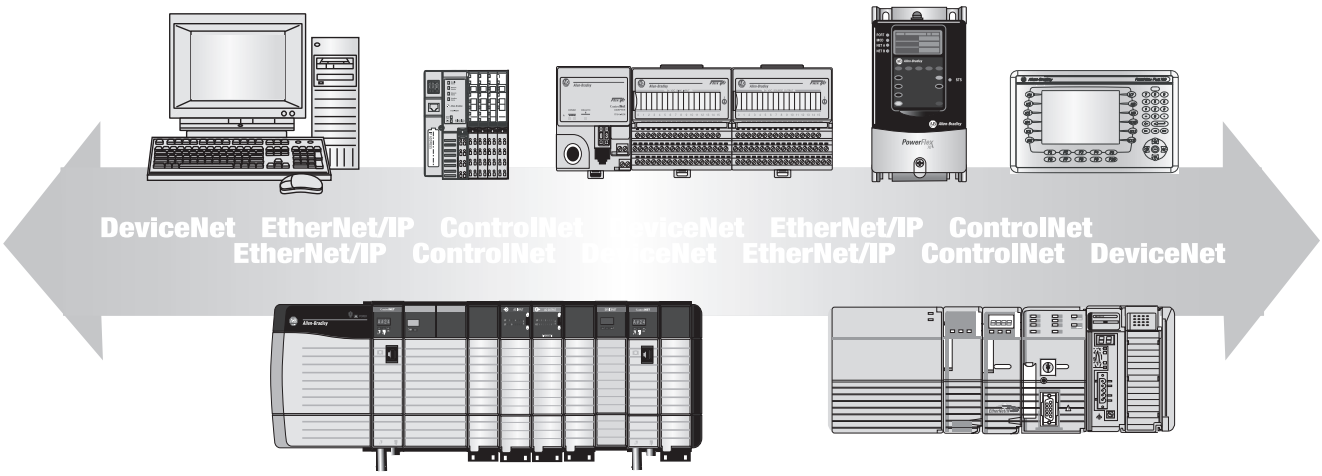

1794 FLEX I/O XT Overview

FLEX I/O-XT™ modules are designated for extreme environment use.

They differ from their non-XT counterparts only in operational temperature ranges and conformal coating is standard for FLEX I/O-XT products.

FLEX I/O-XT modules meet or exceed the following standards:

- ANSI / ISA-S71.04-1985; Class G1, G2, and G3 Environments
- CEI IEC 6065A-4; Class 1 and 2 Environments
- UL 746E
- MIL-1-46058C to ASTM-G21; (Tropicalization and fungicide)

These standards specify common emissions and classify their concentration levels in a number of industrial processes. Just a few of the common reactive agents that the FLEX I/O-XT modules protect against are:

- H2S – Hydrogen sulfide
- SO2, SO3 – Sulfur dioxide
- CnHn – Hydrocarbons
- NOx – Oxides of nitrogen
- CI2 – Wet Chlorine / Dry Chlorine
- NH3 – Ammonia

General FLEX I/O and FLEX I/O XT Specifications

The following table shows the similarities and differences between the FLEX I/O and the FLEX I/O-XT specifications.

Specifications Comparison

Attribute[1]	1794 FLEX I/O	1794 FLEX I/O XT
Temperature, operating[2]	0…55 °C (32…131 °F)	-20...+70 °C (-4....+158 °F)
Temperature, nonoperating	-40…+85 °C (-40…+185 °F)	-40...+85 °C (-40...+185 °F)
Relative humidity	5…95% noncondensing	
Shock, operating[3]	30 g peak acceleration, 11 (±1) ms pulse width	
Shock, nonoperating[1]	50 g peak acceleration, 11 (±1) ms pulse width	
Vibration	Tested 5 g @ 10…500 Hz per IEC 68-2-6	
Wire size	0.34 mm^2…2.5 mm^2 (22…12 AWG) stranded copper wire rated at 75 °C or higher 1.2 mm (3/64 in.) insulation max	
Atmospheric protection[4]	non-conformal coated	conformal coated to meet or exceed the following standards: • ANSI / ISA-S71.04-1985; Class G1, G2, and G3 Environments • CEI IEC 6065A-4; Class 1 and 2 Environments • UL 746E • MIL-1-46058C to ASTM-G21; (Tropicalization and fungicide)

Specifications Comparison

Attribute[1]	1794 FLEX I/O	1794 FLEX I/O XT
Certifications (when product is marked)[5]	• UL Listed Industrial Control Equipment • UL Listed for Class I, Division 2 Groups A, B, C, D Hazardous Locations • CE Marked for all applicable directives • CE / ATEX • CSA Certified Process Control Equipment for Class I, Division 2 Group A, B, C, D Hazardous Locations • RCM Marked for all applicable acts • KCC • Marine Certification • SIL 2 Certification • ODVA • ControlNet	

(1) For all other product-specific specifications, including environmental and certification, see the product sections within this Selection Guide.

(2) Operating temperature may vary per catalog. Refer to the product sections within this selection guide for catalog-specific information.

(3) To maintain these specifications, you must use DIN rail locks.

(4) General specifications does not apply to catalogs that are conformal coated but non-XT modules. Refer to the respective technical data sheet for module-specific data.

(5) See the Product Certification website, http://www.rockwellautomation.com/global/certification/overview.page for Declarations of Conformity, Certificates, and other certification details.

Specify a FLEX I/O or FLEX I/O XT System

Follow these steps as you specify your FLEX I/O or FLEX I/O XT system:

?	Step	See	Page
	1 Select a communication adapter Choose the network for your operating system.	CIP Network Infrastructure Select a Network	15 16
	2 Select I/O modules based on field device • location of the device • your application • number of points needed • number of points available per module • number of modules Or use the Integrated Architecture® Builder tool at http://www.rockwellautomation.com/en/e-tools/configuration.html	Digital I/O Modules FLEX I/O Analog, Thermocouple and RTD Modules FLEX I/O Counter Modules	23 44 67
	3 Select a terminal base Choose an appropriate terminal base for your modules.	General Specification Comparison	75
	4 Choose appropriate power supplies • Choose appropriate power supply • Ensure sufficient power for the communication adapter and modules	Power Supply Definitions Power Requirements and Transformer Sizing	77 78
	5 Determine mounting requirements and select accessories • Determine whether to panel mount or DIN rail mount the FLEX I/O system and at what orientation (horizontal or vertical) • Choose appropriate optional accessories to enhance your system	panel mount or DIN rail mount 1794-CE1 and 1794-CE3 Extender Cables 1794-NM1 FLEX I/O Mounting Kit 1492-EA35 DIN Rail Locks 1794-LBL FLEX I/O Label Kit	121 123 123 124 124

Notes:

Select FLEX I/O Communication Adapters

Step 1 – Select:

a communication adapter based on the appropriate network

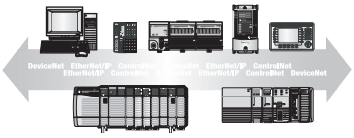

A FLEX I/O adapter module interfaces FLEX I/O modules to an I/O scanner port across a communication network. The FLEX I/O adapter module contains a built-in power supply that converts 24V DC to 5V DC for the backplane to power the FLEX I/O modules.

- Your 1794 FLEX I/O system can communicate on:
- EtherNet/IP
- ControlNet, single media or redundant
- DeviceNet
- Many other open networks including, Remote I/O, PROFIBUS DP, and others from Encompass partners

CIP Network Infrastructure

The Common Industrial Protocol (CIP™) allows complete integration of control with information, multiple CIP networks, and standard Internet technologies. CIP provides manufacturers with a scalable and coherent architecture incorporating discrete, process, safety, synchronization and motion applications using the same network technology as the ERP, MES enterprise levels applications. Ultimately, network convergence helps align technology with business goals for business process transformation and enterprise-wide visibility.

The following networks share the Common Industrial Protocol at their upper levels, while remaining media independent at their lower levels. This allows manufacturers to specify the best network for their application and eliminate costly and complex gateways when connecting dissimilar upper level networks.

- EtherNet/IP is an open industrial networking standard that supports implicit and explicit messaging and uses commercial, off-the-shelf Ethernet equipment and physical media.
- ControlNet allows intelligent, high-speed control devices to share the information required for supervisory control, work-cell coordination, operator interface, remote device configuration, programming, and troubleshooting.
- DeviceNet offers high-speed access to plant-floor data from a broad range of plant floor devices and a significant reduction in wiring.

Select a Network

You can configure your system for information exchange between a range of field devices and a specific scanner. You select the communication adapters for the networks that meet your needs:

Network Comparison by Application Requirement

Application Requirements	Network[1]	Communication Adapter
• Plant management (material handling) • Configuration, data collection, and control on a single, high-speed network • Time-critical applications with no established schedule • Data sent regularly • Internet/Intranet connection • Built-in switch, or high availability requirement (2-port AENTR)	EtherNet/IP	1794-AENT 1794-AENTR 1794-AENTRXT
• High-speed transfer of time-critical data between controllers and I/O devices • Deterministic and repeatable data delivery • Media redundancy	ControlNet	1794-ACN15 1794-ACN15K[2][3] 1794-ACNR15[4] 1794-ACNR15XT[5]
• Connections of low-level devices to plant floor controllers • More diagnostics for improved data collection and fault detection • Less wiring and reduced startup time than a traditional, hard-wired system	DeviceNet	1794-ADN 1794-ADNK
• Connections to Remote I/O networks	Remote I/O	1794-ASB[3] 1794-ASB2[3]
• Connection to PROFIBUS DP and DPV1 networks	PROFIBUS DP PROFIBUS DPV1	1794-APB[3] 1794-APBDPV1

(1) Communication adapters and other components are available for adding to your system as your specific application requirements change. For more information, go to www.rockwellautomation.com/encompass and search for products under the FLEX I/O platform.

(2) Modules that have the letter K in the last position of the catalog number, before the series designation, refer to conformal coated versions of the standard modules. These modules meet the following certifications: ANSI / ISA-S71.04-1985, Class G1, G2, and G3 environments; CEI IEC 6065A-4 Class 1 and 2 environments; UL 746E.

(3) Discontinued catalogs may not have updated specifications. For more information about a specific discontinued catalog, refer to individual installation instructions.

(4) Modules that have the letter R in the catalog number, before the series designation, refer to redundancy versions of the standard modules and are meant for redundancy networks.

(5) Modules that have the letters XT in the catalog number, before the series designation, refer to extended temperatures version of the standard modules.

EtherNet/IP Network

EtherNet/IP is a network suitable for use in industrial environment and time-critical applications. EtherNet/IP uses standard Ethernet and TCP/IP technologies and an open application layer protocol called the Control and Information Protocol (CIP). CIP is also the application layer used in DeviceNet and ControlNet networks. The open Application Layer protocol makes interoperability and interchangeability of industrial automation and control devices on EtherNet/IP a reality for automation and control applications.

The 1794-AENT and 1794-AENTR connect FLEX I/O to Ethernet/IP enabled controllers such as ControlLogix® or CompactLogix™.

Figure 1 - EtherNet/IP Communication

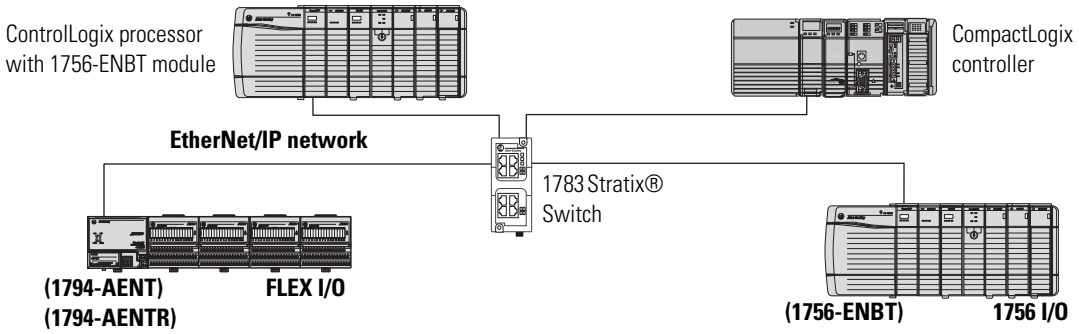

FLEX I/O EtherNet/IP Adapter Specifications

Attribute	1794-AENT	1794-AENTR	1794-AENTRXT
I/O module capacity	8		
Communication rate	10/100 Mbps		
Power consumption at 24V DC	9.6 W	9.3 W	
Power dissipation, max	7.3 W @ 19.2V DC	7.1 W @ 19.2V DC	6.1 W @ 19.2V DC
Thermal dissipation	24.9 BTU/hr @ 24V DC	24.2 BTU/hr @ 24V DC	20.8 BTU/hr @ 24V DC
Power supply 24V current load	450 mA	400 mA @ 24V DC 500 mA max	
Power supply input voltage, nom	24V DC		
Operating voltage range	19.2…31.2V DC (includes 5% AC ripple)		
Ethernet interface	1 – RJ45 category 5	2 – RJ45 category 5	
Dimensions (HxWxD), approx	87 x 94 x 69 mm 3.4 x 3.7 x 2.7 in.	87 x 94 x 92 mm 3.44 x 3.7 x 3.6 in.	
Temperature, operating	0…55 °C (32…131 °F)		-25…+70 °C (-13…+158 °F)

Device Level Ring Topology

A DLR network is a single-fault tolerant ring network intended for the interconnection of automation devices. FLEX I/O modules can connect to a DLR network using EtherNet/IP taps. The following is an illustration of how FLEX I/O systems can be integrated into a DLR topology.

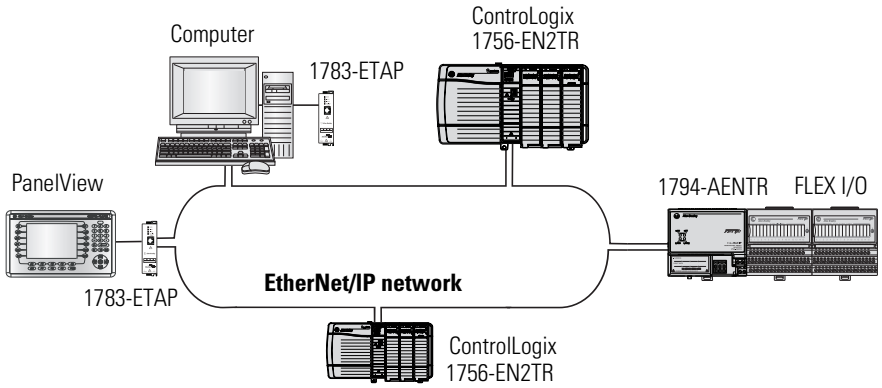

ControlNet Network

ControlNet is a real-time control network that provides high-speed transport of both time-critical I/O and interlocking data and messaging data, including upload/download of programming and configuration data on a single physical media link. The ControlNet network's highly efficient data transfer capability significantly enhances I/O performance and peer-to-peer communication in any system or application where it is used.

The 1794-ACNR15 adapter is capable of accepting redundant ControlNet cable media. The 1794-ACN15 is a non-redundant version.

The following diagram shows the FLEX I/O platform on a ControlNet network.

Figure 2 - ControlNet Communication

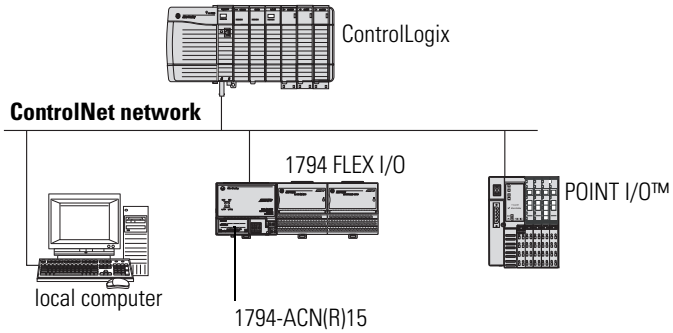

FLEX I/O ControlNet Adapter Specifications

Attribute	1794-ACN15, 1794-ACN15K[1], 1794-ACNR15, 1794-ACNR15XT
I/O module capacity	8
Communication rate	5 Mbps
Power consumption at 24V	7.9 W
Inrush current at 24V	23 A for 2 ms
Power dissipation, max	4.6 W @ 19.2V DC
Thermal dissipation	15.7 BTU/hr @ 19.2V DC
Power supply 24V current load	330 mA
Power supply 24V output current, max	450 mA
Power supply input voltage, nom	24V DC
Operating voltage range	19.2…31.2V DC (includes 5% AC ripple)
ControlNet cable	Allen-Bradley RG-6/U Quad shield coax, part no. 1786-RG6 (standard-PVC CM-CL2) or 1786-RG6F/A (high-flex)
Isolation voltage	Tested @ 850V DC for 1 s, user power to system
Dimensions (HxWxD), approx	87 x 94 x 92 mm 3.4 x 3.7 x 3.6 in.
Temperature, operating	-20…+55 °C (-4…+131 °F) -25…+70 °C (-13…+158 °F) – **1794-ACNR15XT only**

(1) Discontinued catalogs may not have updated specifications. For more information about a specific discontinued catalog, refer to individual installation instructions.

DeviceNet Network

The DeviceNet network is an open low-level network that provides connections between simple industrial devices (such as sensors and actuators) and higher-level devices (such as PLCs and computers). The DeviceNet network uses the proven Common Industrial Protocol (CIP) to provide the control, configure, and data collection capabilities for industrial devices. The DeviceNet network is a flexible network that works with devices from multiple vendors.

The following illustration shows the FLEX I/O platform on a DeviceNet network.

DeviceNet Communication

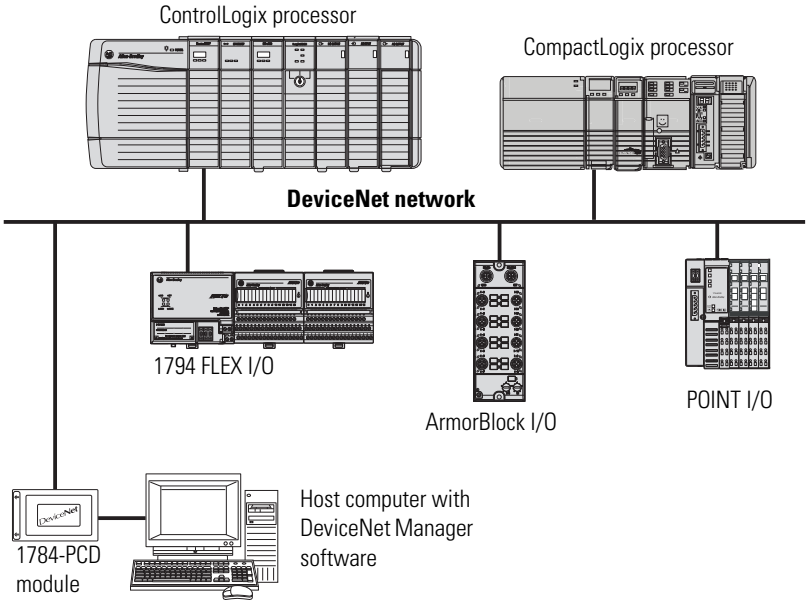

FLEX I/O DeviceNet Adapter Specifications

Attribute	1794-ADN, 1794-ADNK
I/O module capacity	8
Communication rate	125 Kbps 250 Kbps 500 Kbps
Power consumption at 24V	7.9 W
Inrush current at 24V	23 A for 2 ms
Power dissipation, max	4.6 W @ 19.2V DC
Thermal dissipation	15.7 BTU/hr @ 19.2V DC
Power supply 24V current load	330 mA
Power supply 24V output current, max	450 mA
Power supply input voltage, nom	24V DC
Operating voltage range	19.2…31.2V DC (includes 5% AC ripple)
DeviceNet cable	Allen-Bradley part no. 1485C-P1-Cxxx. See publication DNET-UM072 for more information. Extended Local Cable: 1794-CE1 (0.3 m) or 1794-CE3 (0.9 m)
Isolation voltage	Tested @ 850V DC for 1 s, user power to system
Dimensions (HxWxD), approx	87 x 68 x 69 mm 3.4 x 2.7 x 2.7 in.
Temperature, operating	-20…+70 °C (-4…+158 °F)

Other Networks – Remote I/O

The 1794-ASB and 1794-ASB2 adapters provide connection to the Remote I/O network.

The 1794-ASB2 supports only two FLEX I/O modules. The 1794-ASBLT is only for use with classic PLC 5/15 or PLC 5/25 processors.

ATTENTION: Do not use these Remote I/O adapters with the Classic PLC-5/15 or PLC-5/25 processors. Improper operation of the remote I/O may result.

- 1794-ASB, Series E
- 1794-ASB2, Series D
- 1794-ASB2K, Series D

Other Network Communication

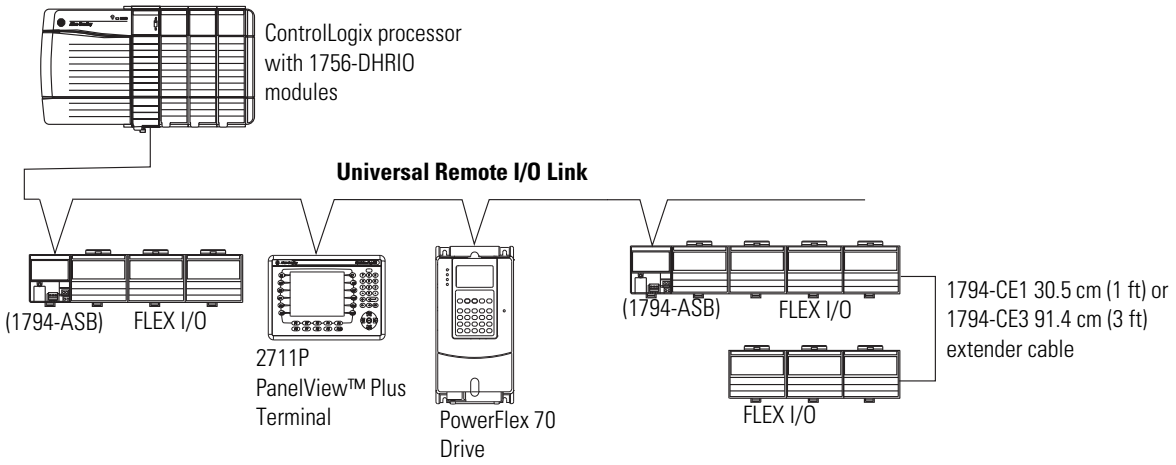

FLEX I/O Remote I/O Adapter Specifications

Attribute	1794-ASB(1), 1794-ASBLT(1)(2)	1794-ASB2(1)
I/O module capacity	8	2
Communication rate	57.6 Kbps 115.2 Kbps 230.4 Kbps	
Power consumption at 24V	7.9 W	4.2 W
Inrush current at 24V	23 A for 2 ms	
Power dissipation, max	4.6 W @ 19.2V DC	3.4 W @ 19.2V DC
Thermal dissipation	15.7 BTU/hr @ 19.2V DC	11.6 BTU/hr @ 19.2V DC
Power supply 24V current load	330 mA	175 mA
Power supply input voltage, nom	24V DC	
Operating voltage range	19.2…31.2V DC (includes 5% AC ripple)	

FLEX I/O Remote I/O Adapter Specifications

Attribute	1794-ASB[1], 1794-ASBLT[1][2]	1794-ASB2[1]
DeviceNet cable	Remote I/O: Belden 9463 or equivalent as specified in Allen-Bradley Approved Vendor List, publication ICCG-2.2 Allen-Bradley pin connector part no. 942029-03	
Isolation voltage	Tested @ 850V DC for 1 s, user power to system	
Dimensions (HxWxD), approx	87 x 68 x 69 mm 3.4 x 2.7 x 2.7 in.	
Temperature, operating	-20…+55 °C (-4…+131 °F)	

(1) Discontinued catalogs may not have updated specifications. For more information about a specific discontinued catalog, refer to individual installation instructions.

(2) The 1794-ASBLT is only for use with Class PLC 5/15 or PLC 5/25 processors.

Other Networks – PROFIBUS DP

Use the 1794-APB or 1794-APBDPV1 adapter to connect to a PROFIBUS DP network.

FLEX I/O PROFIBUS I/O Adapter Specifications

Attribute	1794-APB[1]	1794-APBDPV1
I/O module capacity	8	
Communication rate	57.6 Kbps 115.2 Kbps 230.4 Kbps	All rates up to 12 Mbps
Power consumption at 24V	7.9 W	9.6 W
Inrush current at 24V	23 A for 2 ms	
Power dissipation, max	5.3 W @ 19.2V DC	4.2 W @ 19.2V DC
Thermal dissipation	17.9 BTU/hr @ 19.2V DC	14 BTU/hr @ 19.2V DC
Power supply 24V current load	450 mA	640 mA
Power supply input voltage, nom	24V DC	
Operating voltage range	19.2…31.2V DC (includes 5% AC ripple)	
PROFIBUS connector	9-pin D-shell; PROFIBUS standard drop cable	
Isolation voltage	Tested @ 850V DC for 1 s, user power to system	Tested @ 850V DC for 60 s, PROFIBUS to backplane to power
Dimensions (HxWxD), approx	87 x 68 x 69 mm 3.4 x 2.7 x 2.7 in.	
Temperature, operating	0…55 °C (32…131 °F)	

(1) Discontinued catalogs may not have updated specifications. For more information about a specific discontinued catalog, refer to individual installation instructions.

Our Encompass partners offer adapters for connecting to RS-232/422/485, Serial/DF1, and Modbus. For details, go to www.rockwellautomation.com/encompass/ and search for products under the platform FLEX I/O.

Select FLEX I/O Modules

Step 2 – Select:

I/O Modules

The FLEX I/O module plugs into the terminal base, connecting to the I/O bus and field devices. Since there is no direct wiring to the I/O module, you can remove and insert modules under backplane power, enabling you to change modules without disturbing field wiring, other I/O modules, or FLEX backplane power. This eliminates costly downtime and the inefficiencies of restarting a system.

The choices and flexibility you have with I/O types range from digital and analog to temperature and motion control. FLEX I/O allows you to use as many as eight terminal bases per adapter which can provide a maximum of 256 digital I/O points or 96 analog channels per adapter. You can mix and match digital and analog I/O with mounting and wiring options, supplying you with a successful distributed system solution.

This flexibility gives you the following choices of I/O signal types:

- Digital: AC and DC voltage signals
- Analog: current or voltage
- Relay: normally open, 2 A capability
- Protected outputs: non-latching, latching, and with diagnostics
- Temperature: thermocouple or RTD
- Motion: high-speed counters, flow metering, and totalization
- Combo modules: combination of input and output capability
- Harsh environments: use FLEX I/O XT in harsh environments
- Intrinsic Safety (IS): use FLEX Ex I/O in hazardous areas to connect to field devices

Digital I/O Modules

Digital I/O modules interface with field devices such as:

- pushbutton and limit switches
- on/off actuators such as motor starters, pilot lights, and annunciators
- Relay contacts

Features

Modules are available in different densities ranging from 8 to 32 points.

- Digital I/O modules cover a wide electrical range:

120V AC: Input/Output and Isolated Input/Output, 8 and 16 point

220V AC: Input/Output, 8 point

24V DC: Input/Output/Combination, Sink/Source, Protected, Electronically Fused, Diagnostic, 8, 16, and 32 point

48V DC: Sink Input/Source Output, 16 point

Relay: Sink/Source, 8 point

- Isolated inputs and outputs can be used in applications such as motor control centers where individual control transformers are used.
- Protected outputs (P) have electronic protection which acts to shut the output down in reaction to a short circuit, overload, or over-temperature condition.
  Recovery from shutdown is automatic upon removal of the output fault. No fault status is provided to the processor.
- Electronic Fused (EP) module acts to open the output when a fault occurs. The fuse can be reset by operating a pushbutton, via software, or by cycling the input power. Fault status is provided to the processor.
- Diagnostic (D) modules detect, indicate, and report to the processor the following faults:

  open input or output field devices or wiring

  shorted output field devices

  shorted input or output wiring

  reverse polarity of user supply wiring
- Selectable input filter times from <1...60 ms.
- LED for each channel indicating status of:

  corresponding input device

  output signal

Digital I/O Module Summary

Catalog Number	Inputs	Outputs	Terminal Base Unit	Electrical Range	Module Type
AC Modules					
1794-IA8	8	—	1794-TBN, 1794-TB2, 1794-TB3, 1794-TB3S, 1794-TBKD, 1794-TB3K, 1794-TB3SK, 1794-TBNK	120V AC	Nonisolated inputs
1794-IA8I					Isolated inputs
1794-IA16	16		1794-TB3, 1794-TB3S, 1794-TBN[1], 1794-TB3K, 1794-TB3SK, 1794-TBNK	120V AC	Nonisolated inputs
1794-IM8	8	—	1794-TBN, 1794-TBNK	240V AC	
1794-IM16	16				
1794-OA8	—	8	1794-TBNF, 1794-TB2, 1794-TB3, 1794-TB3S, 1794-TBN, 1794-TBKD, 1794-TB3K, 1794-TB3SK, 1794-TBNK	120V AC	Nonisolated outputs
1794-OA8I					Isolated outputs
1794-OA16		16	1794-TB3, 1794-TB2, 1794-TB3S,1794-TB3K 1794-TB3SK, 1794-TBN[1], 1794-TBKD, 1794-TBNK	120V AC	Nonisolated outputs
1794-OM8		8	1794-TBNF, 1794-TBN, 1794-TBNK	240V AC	
1794-OM16		16			

Digital I/O Module Summary

Catalog Number	Inputs	Outputs	Terminal Base Unit	Electrical Range	Module Type
DC Modules					
1794-IB8	8	—	1794-TB3, 1794-TB3S, 1794-TB3K, 1794-TB3SK	24V DC	Nonisolated inputs
1794-IB16	16	—			
1794-IB16D			1794-TB32, 1794-TB32S		Group isolated inputs Diagnostics
1794-IB16XT			1794-TB3, 1794-TB3S, 1794-TB3K, 1794-TB3SK		Nonisolated inputs Extended temperatures
1794-IB10XOB6	10	6	1794-TB2, 1794-TB3, 1794-TB3S, 1794-TB3K, 1794-TB3SK		Nonisolated I/O
1794-IB10XOB6XT					Nonisolated I/O Extended temperatures
1794-IB16XOB16P	16	16	1794-TB32, 1794-TB32S		Nonisolated I/O Protected outputs
1794-IC16		—	1794-TB3, 1794-TB3S, 1794-TB3K, 1794-TB3SK	48V DC	Nonisolated inputs
1794-IG16				5V DC	
1794-IH16				125V DC	
1794-IV16				24V DC	
1794-IB32	32		1794-TB32, 1794-TB32S		
1794-IV32					Nonisolated inputs with groups
1794-OB8	—	8	1794-TB2, 1794-TB3, 1794-TB3S, 1794-TB3K, 1794-TB3SK	24V DC	Nonisolated outputs
1794-OB8EP			1794-TB2, 1794-TB3, 1794-TB3S, 1794-TBN, 1794-TB3K, 1794-TB3SK, 1794-TBNK		Nonisolated, protected outputs
1794-OB8EPXT					Nonisolated, protected outputs Extended temperatures
1794-OB16	—	16	1794-TB2, 1794-TB3, 1794-TB3S, 1794-TB3K, 1794-TB3SK	24V DC	Nonisolated outputs
1794-OB16D					Nonisolated outputs Diagnostics
1794-OB16P			1794-TB2, 1794-TB3, 1794-TB3S, 1794-TBN, 1794-TB3K, 1794-TB3SK, 1794-TBNK		Nonisolated, protected outputs Conformal coated
1794-OB16PXT					Nonisolated, protected outputs Extended temperatures
1794-OB32P		32	1794-TB32, 1794-TB32S	24V DC	Nonisolated, protected outputs with groups

Digital I/O Module Summary

Catalog Number	Inputs	Outputs	Terminal Base Unit	Electrical Range	Module Type
1794-OC16	—	16	1794-TB3, 1794-TB3S, 1794-TB3K, 1794-TB3SK	48V DC	Nonisolated outputs
1794-OG16				5V DC	
1794-OV16				24V DC	
1794-OV16P					Nonisolated, protected outputs
1794-OV32		32	1794-TB32, 1794-TB32S		Nonisolated outputs in groups
Relay Modules					
1794-OW8	—	8	1794-TB2, 1794-TB3, 1794-TB3S, 1794-TBN, 1794-TBNF, 1794-TB3K, 1794-TB3SK, 1794-TBNK	24V DC	Isolated outputs Electromagnetic relays
1794-OW8XT					Isolated outputs Electromagnetic relays Extended temperatures

(1) Auxiliary terminal strips are required when using the 1794-TBN.

Select Input Filter Times for Digital Modules

Input filter times can be set to the following values (EtherNet/IP, ControlNet, and DeviceNet only).

Input Filter Times – AC Modules

Filter Times for Inputs	Maximum Times (ms)			
	OFF to ON		ON to OFF	
	1794-IA8, 1794-IA8I	1794-IA16, 1794-IM8	1794-IA8, 1794-IA8I	1794-IA16, 1794-IM8
Filter time 0 (default)	8.4(1)	7.5	26.4(2)	26.5
1	8.6	8	26.6	27
2	9	9	27	28
3	10	10	28	29
4	12	12	30	31
5	16	16	34	35
6	24	24.5	42	44
7	40	42	58	60.5

(1) OFF to ON filter is 8 ms.

(2) ON to OFF filter is 26 ms.

Input Filter Times – DC Modules

Filter Times for Inputs	Maximum Times (ms)
	OFF to ON and ON to OFF
	1794-IB8, 1794-IB16, 1794-IB32, 1794-IV16, 1794-IC16, 1794-IB10XOB6, 1794-IB16XOB16P
Filter time 0 (default)	0.25
1	0.5
2	1
3	2
4	4
5	8
6	16
7	32

Derating Curve

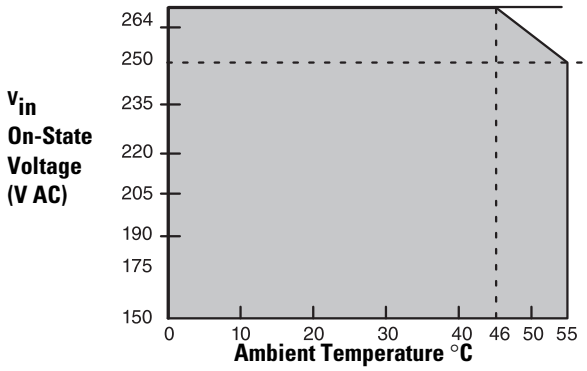

The area within the curve represents the safe operating range for the module under various conditions of user supplied 220V AC supply voltages and ambient temperatures.

= All mounting positions (including normal horizontal, vertical, inverted horizontal) safe operating range.

Modules Specifications

The following section shows more detailed module specifications in comparative groups to facilitate your selection based on your requirements.

FLEX I/O Digital AC Input Modules

Digital AC Input Comparison

Specification	1794-IA8, 1794-IA8I	1794-IA16	1794-IM8	1794-IM16
Voltage, on-state input, nom	120V AC[1]		240V AC	

Digital AC Input Comparison

Specification	1794-IA8, 1794-IA8I	1794-IA16	1794-IM8	1794-IM16
Terminal base unit	1794-TBN, 1794-TB2, 1794-TB3, 1794-TB3S, 1794-TBKD, 1794-TB3K, 1794-TB3SK, 1794-TBNK	1794-TB3, 1794-TB3S, 1794-TBN[(2)], 1794-TB3K, 1794-TB3SK, 1794-TBNK	1794-TBN, 1794-TBNK	
Current, on-state input, nom	12 mA @ 120V AC, 60 Hz		10 mA @ 240V AC, 60 Hz	11 mA @ 240V AC, 60 Hz
Input impedance, nom	10.6 kΩ	10 kΩ	22.3 kΩ	22.2 kΩ
Voltage, on-state input, min	65V AC	74V AC	159V AC	
Voltage, off-state input, max	43V AC	20V AC	40V AC	
Current, on-state input, min	7.1 mA	5.5 mA @ 74V AC, 47 Hz	5.3 mA @ 159V AC, 47 Hz	
Current, off-state input, max	2.9 mA		2.6 mA	
Power dissipation, max	4.5 W @ 132V AC	6.4 W @ 132V AC	4.7 W @ 264V AC	6 W @ 264V AC
Thermal dissipation, max	15.3 BTU/hr @ 132V AC	21.8 BTU/hr @ 132V AC	16.2 BTU/hr @ 264V AC	20.47 BTU/hr @ 264V AC
Dimensions (HxWxD)	46 x 94 x 53 mm (1.8 x 3.7 x 2.1 in.) 94 x 94 x 69 mm (3.7 x 3.7 x 2.7 in.) installed			
Isolation voltage	120V (continuous), Basic Insulation Type Type tested at 1250V AC (1240V for 1794-IA8I) for 60 s, between field side and system No isolation between individual channels Routine tested to 2150V DC for 1 s, between field side and system No isolation between individual channels	120V (continuous), Basic Insulation Type Type tested at 1264V AC for 60 s, between field side and system No isolation between individual channels Routine tested at 2150V DC for 1 s, between field side and system No isolation between individual channels	250V (continuous), Basic Insulation Type, field side to backplane No isolation between individual channels Type tested at 1250V AC for 60 s	
Temperature, operating	-20…+55 °C (-4…+131 °F)	0…55 °C (32…131 °F)	0…55 °C (32…131 °F)	

(1) 1794-IA8I – isolated voltage.

(2) Auxiliary terminal strips are required when using the 1794-TBN.

1794-IM8 Derating Curve

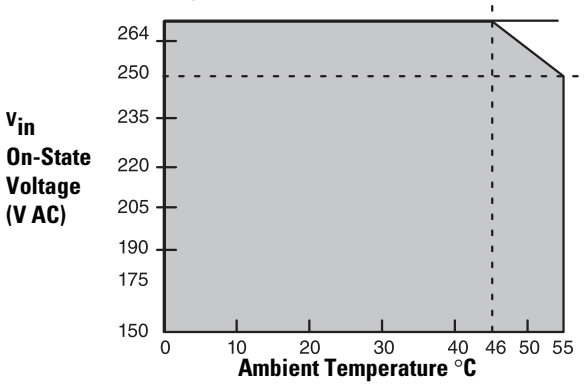

The area within the curve represents the safe operating range for the module under various conditions of user supplied 220V AC supply voltages and ambient temperatures.

= All mounting positions (including normal horizontal, vertical, inverted horizontal) safe operating range.

FLEX I/O Digital AC Output Modules

Digital AC Output Comparison

Specification	1794-OA8, 1794-OA8I	1794-OA16	1794-OM8	1794-OM16
Voltage, on-state output, nom	120V AC[2]		220V AC	240V AC
Terminal base unit	1794-TBN, 1794-TBNF, 1794-TB2, 1794-TB3, 1794-TB3S, 1794-TBKD, 1794-TBNK, 1794-TB3K, 1794-TB3SK	1794-TBN[4], 1794-TBNF, 1794-TB2, 1794-TB3S, 1794-TBKD, 1794-TBNK, 1794-TB3K, 1794-TB3SK	1794-TBN, 1794-TBNF, 1794-TBNK	
Current, on-state output, min	5 mA per output			
Current, on-state output, max	500 mA pre output @ 55 °C [3] 750 mA per output @ 35 °C 1.0 A on 4 nonadjacent outputs and 500 mA on the remaining 4 outputs @ 30 °C	500 mA per output @ 55 °C[5]	500 mA @ 55 °C[6]	
Current, on-state output, per module	4.0 A (8 outputs @ 500 mA)	4.0 A (16 outputs @ 250 mA)	4.0 A (8 outputs @ 500 mA)[5]	4.0 A (16 outputs @ 250 mA)
Leakage current, off-state output, max	2.25 mA		2.5 mA	
Voltage drop, on-state output, max	1.0V @ 0.5 A	1.5V @ 0.5 A		
Output surge current, max	7 A for 45 ms, repeatable every 8 s	7 A for 40 ms, repeatable every 8 s		
Voltage, on-state output, min[1]	85V AC		159V AC	
Voltage, on-state output, nom	120V AC		240V AC	
Voltage, on-state output, max	132V AC		264V AC	
Power dissipation, max	4.1 W @ 0.5 A 6.3 W @ 0.75 A 6.3 W @ 1.0 A	4.7 W @ 0.5 A	5 W @ 0.5 A	6 W @ 264V AC
Thermal dissipation, max	14.0 BTU/hr @ 0.5 A 21.1 BTU/hr @ 0.75 A 21.4 BTU/hr @ 1.0 A	16.1 BTU/hr @ 0.5 A	17.1 BTU/hr @ 0.5 A	20.47 BTU/hr @ 264V AC
Dimensions (HxWxD), approx	46 x 94 x 53 mm (1.8 x 3.7 x 2.1 in.) 94 x 94 x 69 mm (3.7 x 3.7 x 2.7 in.) installed			
Isolation voltage	120V (continuous), I/O to system (and channel to channel for 1794-OA8I) No isolation between individual channels Tested to 2150V DC for 1 s and 1250V AC for 60 s		Tested at 2600V DC for 1 s, I/O to system No isolation between individual channels	250V (continuous), Basic Insulation Type, field side to backplane No isolation between individual channels Type tested at 1250V AC for 60 s
Temperature, operating	-20…+55 °C (-4…+131 °F)	0…55 °C (32…131 °F)		

(1) The external AC supply voltage must be capable of a 50 A surge for 1/2 cycle at power-up.

(2) 1794-OA8I – isolated voltage

(3) sufficient to operate an A-B 500 NEMA size 3 motor starter

(4) Auxiliary terminal strips are required when using the 1794-TBN for the 1794-OA16.

(5) If using 0.5 A outputs, alternate wiring so that no two 0.5 A outputs are adjacent. See the 1794-OA16 Derating Curve for mounting other than the normal horizontal.

(6) See the 1794-OM8 Derating Curve.

IMPORTANT

- The output signal delay, OFF to ON or ON to OFF is 1/2 cycle maximum.
- Modules have a yellow status indicator for each channel. These indicators are driven from the logic-side circuitry.
- Module outputs are not fused. Fusing of individual outputs is required. If applicable, the 1794-TBNF is recommended, otherwise you must provide external fusing. The following fuses are recommended:
  - 1794-OA8, 1794-OA8I – Use 1.6 A, 250V Slow-Blow, Littelfuse (part number 23901.6); San-o SD6-1.6 A (AB part number 94171304). The 1794-TBNF comes with SD6-1.6 A fuses installed.
  - 1794-OA16 – Use 2.5 A, 150V MQ2 normal fuse.
  - 1794-OM8 – Use 0.8 A, 250V MQ4 normal fuse.

1794-OA16 Derating Curve

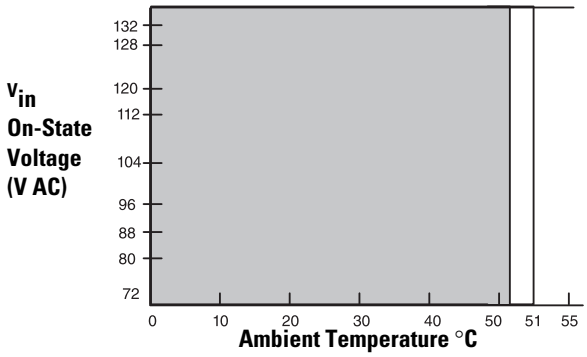

The area within the curve represents the safe operating range for the module under various conditions of user supplied 220V AC supply voltages and ambient temperatures.

☐ = Normal mounting safe operating range ▩ included
▩ = Other mounting positions (including inverted horizontal, vertical) safe operating range

1794-OM8 Derating Curve

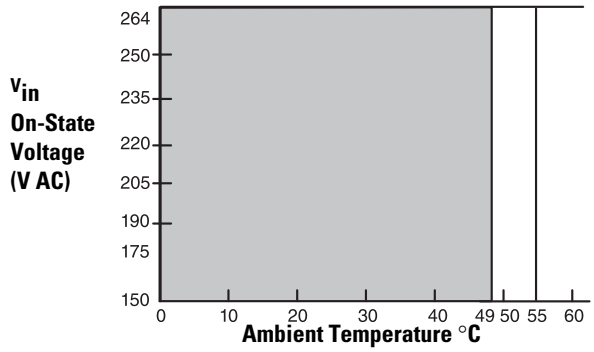

The area within the curve represents the safe operating range for the module under various conditions of user supplied 220V AC supply voltages and ambient temperatures.

= Normal mounting safe operating range included
= Other mounting positions (including inverted horizontal, vertical) safe operating range

FLEX I/O Digital DC Input Modules

Digital DC Input Comparison

Specification	1794-IB8, 1794-IB16, 1794-IB16XT	1794-IV16	1794-IB32	1794-IV32	1794-IC16	1794-IG16	1794-IH16
Voltage, on-state input, min	10V DC, sinking	10V DC, sourcing	19.2V DC, sinking	19.2V DC, sourcing	30V DC, sinking	-0.2V DC, TTL	90V DC, sinking
Voltage, on-state input, nom	24V DC				48V DC	0V DC	125V DC
Voltage, on-state input, max	31.2V DC				60V DC	0.8V DC	146V DC
Voltage, off-state input, max	5V DC				10V DC	2.0...5.5V DC	20V DC
Terminal base unit	1794-TB3, 1794-TB3S, 1794-TB3K, 1794-TB3SK	1794-TB3, 1794-TB3S, 1794-TB3K, 1794-TB3SK	1794-TB32, 1794-TB32S		1794-TB3, 1794-TB3S, 1794-TB3K, 1794-TB3SK		
Current, on-state input, min	2.0 mA					—	1.0 mA
Current, on-state input, nom	8 mA @ 24V DC		4.1 mA @ 24V DC	4.1 mA	5 mA @ 48V DC	—	2 mA @ 125V DC
Current, on-state input, max	**1794-IB16:** 12 mA **1794-IB8, 1794-IV16:** 11 mA **1794-IB16XT:** 5.0 mA		6 mA	6 mA	11 mA	—	3 mA
Current, off-state input, max	1.5 mA					4.1 mA	0.8 mA
Input impedance, max	4.6 kΩ	4.7 kΩ	6 kΩ		11 kΩ	—	60 kΩ
Power dissipation, max	**1794-IB8:** 3.5W @ 31.2V DC **1794-IB16:** 6.1W @ 31.2V DC **1794-IB16XT:** 2W @ 31.2V DC	5.7 W @ 31.2V DC	6.0 W @ 31.2V DC		6.4 W @ 60V DC	1.4 W @ 5.5V DC	6 W @ 146V DC
Thermal dissipation, max	**1794-IB8:** 11.9 BTU/hr @ 31.2V DC **1794-IB16:** 20.8 BTU/hr @ 31.2V DC **1794-IB16XT:** 6.8 BTU/hr @ 31.2V DC	19.4 BTU/hr @ 31.2V DC	20.5 BTU/hr @ 31.2V DC		21.9 BTU/hr @ 60V DC	4.78 BTU/hr @ 5.5V DC	20.47 BTU/hr @ 146V DC
Dimensions (HxWxD), approx	46 x 94 x 53 mm (1.8 x 3.7 x 2.1 in.) 94 x 94 x 69 mm (3.7 x 3.7 x 2.7 in.) installed						

Digital DC Input Comparison

Specification	1794-IB8, 1794-IB16, 1794-IB16XT	1794-IV16	1794-IB32	1794-IV32	1794-IC16	1794-IG16	1794-IH16
Isolation voltage	50V (continuous), Basic Insulation Type, between field side and system No isolation between individual channels **1794-IB8, 1794-IB16XT:** Type tested at 850V DC for 60 s **1794-IV16:** Type tested at 700V DC for 60 s **1794-IB32:** Routine tested at 2121V DC for 2 s **1794-IV32:** Type tested at 707V DC for 60 s **All other modules:** Type tested at 707V DC for 60 s				Tested at 1900V DC for 1 s, I/O to system No isolation between individual channels	50V (continuous), Basic Insulation Type, between field side and system No isolation between individual channels Type tested at 707V DC for 60 s	250V (continuous), Basic Insulation Type, between field side and system Type tested at 1706V DC for 60 s, between field side and system No isolation between individual channels
Temperature, operating	**1794-IB8, 1794-IB16:** -20…+55 °C (-4…+131 °F) **1794-IB16XT:** -20…+70 °C (-4…+158 °F)	-20…+55 °C (-4…+131 °F)	0…55 °C (32…131 °F)				

IMPORTANT
- Do not put the 1794-IB8 module next to an output module in 8-point compact addressing with the 1794-ASB2/C or 1794-ASB/D.
- Modules have a yellow status indicator for each channel. These indicators are driven from the customer field-side input device.

1794-IB16 Derating Curve

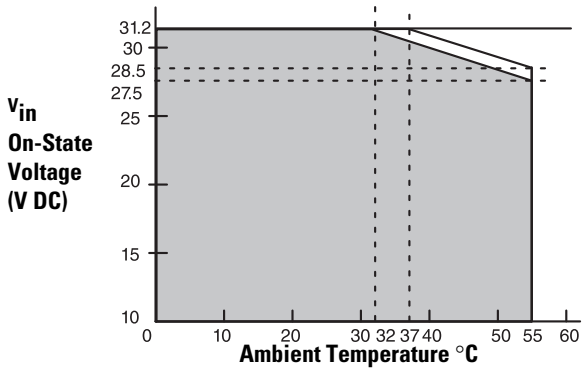

The area within the curve represents the safe operating range for the module under various conditions of user supplied 24V DC supply voltages and ambient temperatures.

□ = Normal mounting safe operating range ■ included
■ = Other mounting positions (including inverted horizontal, vertical) safe operating range

1794-IB32 Derating Curve

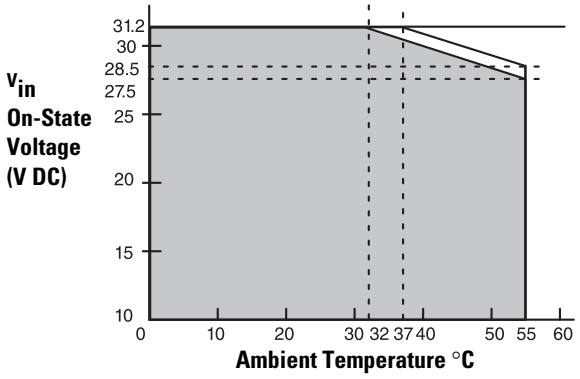

The area within the curve represents the safe operating range for the module under various conditions of user supplied 24V DC supply voltages and ambient temperatures.

□ = Normal mounting safe operating range ■ included
■ = Other mounting positions (including inverted horizontal, vertical) safe operating range

1794-IC16 Derating Curve

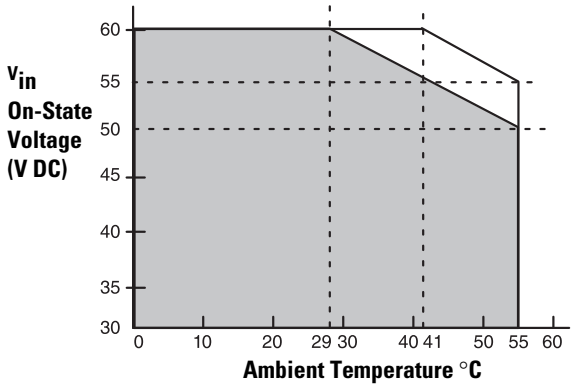

The area within the curve represents the safe operating range for the module under various conditions of user supplied 48V DC supply voltages and ambient temperature.

☐ = Normal mounting safe operating range ▬ included
▬ = Other mounting positions (including inverted horizontal) safe operating range

FLEX I/O Digital DC Output Modules

- 1794-OB8 and 1794-OB16 provide 16 sourcing 1/2 Amp outputs (8 for the 1794-OB8) over a wide 10...31.2V DC input voltage range.
- 1794-OV16 is the sinking version of the 1794-OB16.
- 1794-OV32 is the 32 output version of the 1794-OV16.
- 1794-OC16 is the 48V DC version of the 1794-OB16.
- These modules are not fused. External fusing is strongly recommended or use protected output modules. Module outputs are not fused. Fusing of outputs is recommended. If fusing is desired, you must provide external fusing.

  For 1794-OB8, 1794-OB16, and 1794-OV16 use SAN-O MQ4-800 mA fuse.

  For 1794-OC16 use 2 A, 150V AC MQ2 normal fuse.

Digital DC Output Comparison

Specification	1794-OB8	1794-OB16	1794-OV16	1794-OV32	1794-OG16	1794-OC16
Voltage, on-state output, nom	24V DC, sourcing		24V DC, sinking		0V DC	48V DC, sourcing
Voltage, on-state output, min	10V DC				0V DC	30V DC
Voltage, on-state input, max	31.2V DC				0.4V DC	60V DC @ 45 °C 55V DC @ 55 °C
Voltage drop, on-state output, max	0.5V DC		0.2V DC		—	1.0V DC @ 0.5 A
Terminal base unit	1794-TB2, 1794-TB3, 1794-TB3S, 1794-TB3K, 1794-TB3SK		1794-TB3, 1794-TB3S, 1794-TB3K, 1794-TB3SK			1794-TB2, 1794-TB3, 1794-TB3S, 1794-TB3K, 1794-TB3SK
Current, on-state output, min	1.0 mA per channel				0.15 mA per channel	2.0 mA per channel
Current, off-state output, max	500 mA per channel 4 A per module	500 mA per channel 8 A per module		500 mA	24.0 mA per channel	500 mA per channel 8 A per module
Leakage current, off-state output, max	0.5 mA				1 mA	1.0 mA
Output surge current, max	2 A for 50 ms, repeatable every 2 s				—	4 A for 10 ms, repeatable every 2 s
Output delay time, OFF to ON, max	0.5 ms				0.25 ms	0.5 ms(1)
Output delay time, ON to OFF, max	1.0 ms				0.5 ms	1.0 ms @ 25 °C 2.0 ms @ 55 °C(2)
External DC supply voltage range	10…31.2V DC (5% ripple)				4.5...5.5V DC (includes 50 mV p-p ripple)	30…60V DC (5% ripple)
External DC supply current range	10…35 mA	20…65 mA		50 mA	100 mA @ 5V DC	13…27 mA
Power dissipation, max	3.3 W @ 31.2V DC	5.3 W @ 31.2V DC	4.2 W @ 31.2V DC	4.4 W @ 31.2V DC	0.8 W @ 5.5V DC	3.7 W @ 60V DC
Thermal dissipation, max	11.2 BTU/hr @31.2V DC	18.1 BTU/hr @31.2V DC	14.3 BTU/hr @ 31.2V DC	8.53 BTU/hr @ 31.2V DC	3.41 BTU/hr @ 5.5V DC	12.6 BTU/hr @ 60V DC
Dimensions (HxWxD), approx	46 x 94 x 53 mm (1.8 x 3.7 x 2.1 in.) 94 x 94 x 69 mm (3.7 x 3.7 x 2.7 in.) installed					
Isolation voltage	50V continuous, I/O to system Tested to 850V DC for 1 s, I/O to system No isolation between individual channels		50V continuous Tested 1770V DC for 60 s, I/O to system No isolation between individual channels	50V (continuous), Basic Insulation Type, between field side and system Type tested at 707V DC for 60 s, between field side and system No isolation between individual channels		75V continuous, I/O to system Tested to 1900V DC for 1 s, I/O to system (No isolation between individual channels)
Temperature, operating	-20…+55 °C (-4…+131 °F)		-20…+55 °C (-4…+131 °F)	0…55 °C (32…131 °F)		

(1) OFF to ON delay is the time from a valid output ON signal to output energization. ON to OFF delay is the time from a valid output OFF signal to output de-energization.

FLEX I/O Digital DC Protected Output Modules

- 1794-OB16P provides 16 sourcing 1/2 Amp outputs self-protected against shorts, overloads, and over temperature. The faulted output will automatically return when the fault is removed. No feedback to the processor is provided.
- 1794-OB16PXT is the extended temperature version of the 1794-OB16P module. The module is conformal coated.
- 1794-OB8EP provides 8 sourcing 2 Amp outputs with electronic fuse type of overload protection, which opens when overloaded. The fuse can be 'reset' several ways. Fault status is provided to the processor.
- 1794-OB8EPXT is the extended temperature version of the 1794-OB8EP module. The module is conformal coated.
- 1794-OB32P provides 32 self-protected sourcing 1/2 Amp outputs in 2 groups of 16 outputs. Separate voltage sources can be used with each group.
- 1794-OV16P is the sinking version of the 1794-OB16P.

Digital DC Protected Output Comparison

Specification	1794-OB16P, 1794-OB16PXT	1794-OB8EP, 1794-OB8EPXT	1794-OB32P	1794-OV16P
Voltage, on-state output, nom	24V DC, sourcing			24V DC, sinking
Voltage, on-state output, min	10V DC	19V.2 DC	10V DC	
Voltage, on-state output, max	31.2V DC[1]	31.2V DC		
Voltage drop, on-state output, max	0.5V DC	0.2V DC	0.5V DC	0.2V DC
Terminal base unit	1794-TB2, 1794-TB3, 1794-TB3S, 1794-TB3K, 1794-TB3SK	1794-TB2, 1794-TB3, 1794-TB3S, 1794-TBN, 1794-TB3K, 1794-TB3SK, 1794-TBNK	1794-TB32, 1794-TB32S	1794-TB3, 1794-TB3S, 1794-TB3K, 1794-TB3SK
Current on-state output, min	1.0 mA per channel			
Current, on-state output, max	500 mA per channel, 8 A per module	2.0 A per channel, 10 A per module	500 mA per channel, 14 A per module[2]	500 mA per channel, 8 A per module
Leakage current, off-state output, max	0.5 mA			
Output surge current, max	1.5 A for 50 ms, repeatable every 2 s	4 A for 50 ms, repeatable every 3 s	2 A for 50 ms, repeatable every 2 s	
Output delay time, OFF to ON, max	0.5 ms	0.1 ms	0.5 ms	
Output delay time, ON to OFF, max	1.0 ms	0.1 ms	1.0 ms	
External DC supply voltage range	10…31.2V DC (5% AC ripple)	19.2…31.2V DC (5% AC ripple)	10…31.2V DC (5% AC ripple)	
External DC supply current range	25…75 mA	20…35 mA	103…273 mA	20…65 mA
Power dissipation, max	5.0 W @ 31.2V DC	5.5 W @ 31.2V DC	5.3 W @ 31.2V DC	4.2 W @ 31.2V DC
Thermal dissipation, max	17.0 BTU/hr @ 31.2V DC	18.8 BTU/hr @ 31.2V DC	18.1 BTU/hr @ 31.2V DC	14.3 BTU/hr @ 31.2V DC
Dimensions (HxWxD), approx	46 x 94 x 53 mm (1.8 x 3.7 x 2.1 in.) 94 x 94 x 69 mm (3.7 x 3.7 x 2.7 in.) installed			

Digital DC Protected Output Comparison

Specification	1794-OB16P, 1794-OB16PXT	1794-OB8EP, 1794-OB8EPXT	1794-OB32P	1794-OV16P
Isolation voltage	50V (continuous), Basic Insulation Type Type tested at 2121V DC for 60 s, between field side and system No isolation between individual channels	50V (continuous), Basic Insulation Type Type tested at 850V DC for 60 s, between field side and system **1794-OB8EPXT:** Type tested at 1500V AC for 60 s, between field side and system No isolation between individual channels		50V (continuous), Basic Insulation Type Type tested at 1770V DC for 60 s, between field side and system No isolation between individual channels
Temperature, operating	**1794-OB16P:** -20…+55 °C (-4…+131 °F) **1794-OB16PXT:** -20…+70 °C (-4…+158 °F)	**1794-OB8EP:** -20…+55 °C (-4…+131 °F) **1794-OB8EPXT:** -20…+70 °C (-4…+158 °F)	0…55 °C (32…131 °F)	-20…+55 °C (-4…+131 °F)

(1) See 1794-OB16P Derating Curve.

(2) 6.0 A total for channels 0…15; 8.0 A total for channels 16…31.

1794-OB16P Derating Curve

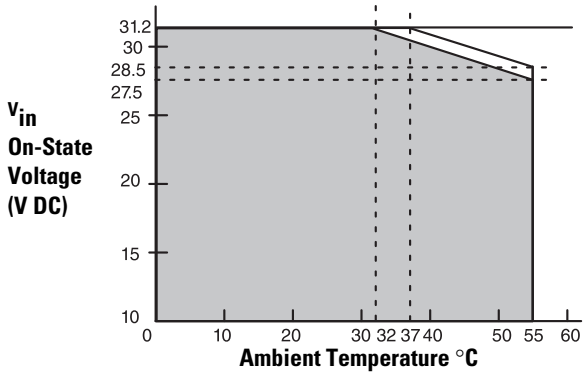

The area within the curve represents the safe operating range for the module under various conditions of user supplied 24V DC supply voltages and ambient temperatures.

= Normal mounting safe operating range = included

= Other mounting positions (including inverted horizontal, vertical) safe operating range

1794-OB8EP Output Minimum Surge

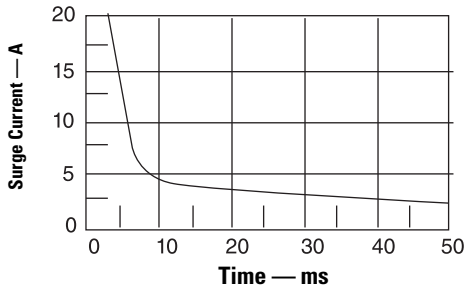

FLEX I/O Digital DC Diagnostic Modules

1794-IB16D is the diagnostic version of the 1794-IB16.

1794-OB16D is the diagnostic version of the 1794-OB16.

The modules can detect open wire, short circuit, and reverse polarity of external power. When the module detects a fault, the module fault LED status indicator lights up, the corresponding red channel LED status indicator lights up, and the corresponding module error bit (open wire, short circuit, or reverse power bit) is set. The reporting function provides results of the diagnostics as bits in its data table.

The modules have 16-bi-color channel LED status indicators and one red module status indicator. These indicators are driven from the customer field side power.

Digital DC Diagnostic Input Module

Specification	1794-IB16D
Voltage, on-state input, min	10V DC, sinking
Voltage, on-state input, nom	24V DC
Voltage, on-state input, max	31.2 DC(1)
Voltage, off-state input, max	5.0V DC
Current, on-state input, nom	8.2 mA @ 24V DC
Current, on-state input, max	12.1 mA @ 31.2V DC
Terminal base unit	1794-TB32, 1794-TB32S
Input impedance, max.	3.1 kΩ
Current, on-state input, min	2.0 mA @ 10V DC
Current, off-state input, max	1.5 mA
Power dissipation, max	8.5 W @ 31.2V DC
Thermal dissipation, max	29 BTU/hr @ 31.2V DC
Detected reverse polarity voltage	10V min(2)
Sensor voltage drop, max	2.2V DC
Current, sensor source, max	50 mA
Dimensions (HxWxD), approx	46 x 94 x 53 mm (1.8 x 3.7 x 2.1 in.) 94 x 94 x 69 mm (3.7 x 3.7 x 2.7 in.) installed
Isolation voltage	50V continuous, I/O to system Tested to 2121V DC for 1 s, I/O to system No isolation between individual channels
Temperature, operating	0…55 °C (32…131 °F)

(1) See 1794-IB16D Derating Curves.

(2) Module must detect if the reverse polarity external power supply voltage is greater than the value.

Digital DC Diagnostic Output Module

Specification	1794-OB16D
Voltage, on-state output, min	10V DC, sinking
Voltage, on-state output, max	31.2 DC
Voltage drop, on-state output, max	0.5V DC @ 0.5 A
Terminal base unit	1794-TB3, 1794-TB3S, 1794-TB3K, 1794-TB3SK
Current, on-state output, min	2.0 mA per channel
Current, on-state output, max	500 mA per channel 8 A per module
Leakage current, off-state output, max	0.5 mA
Output surge current, max	2 A for 50 ms, repeatable every 2 s
External DC supply voltage range	10…31.2V DC (5% AC ripple)
External DC supply current range	56…78 mA
Power dissipation, max	4.8 W @ 31.2V DC
Thermal dissipation, max	16.4 BTU/hr @ 31.2V DC
Short circuit protection	Thermal shutdown (auto reset)(1)
Open wire detection, off-state leakage current	0.1 mA(2)
Detect reverse polarity voltage, min	10V(3)
Current, sensor source, max	Yes
Dimensions (HxWxD), approx	46 x 94 x 53 mm (1.8 x 3.7 x 2.1 in.) 94 x 94 x 69 mm (3.7 x 3.7 x 2.7 in.) installed
Isolation voltage	50V continuous, I/O to system Tested to 2121V DC for 1 s, I/O to system No isolation between individual channels
Temperature, operating	0…55 °C (32…131 °F)

(1) Short circuit protection detection condition: when external power active, output signal active, and output port voltage less than 2V.

(2) When external power active and output signal inactive

(3) Module must detect if the reverse polarity external power supply voltage is greater than the value.

1794-IB16D Derating Curves

Input Voltage

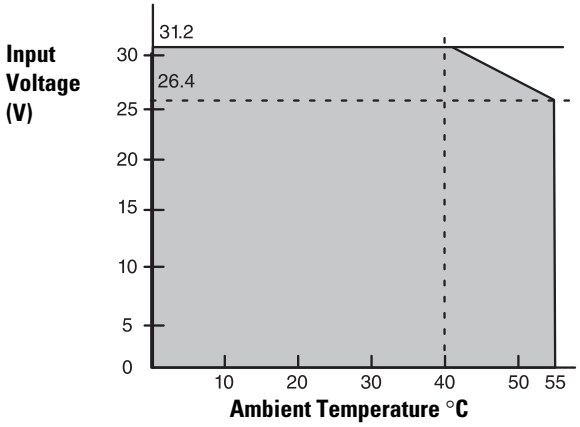

Sensor Power

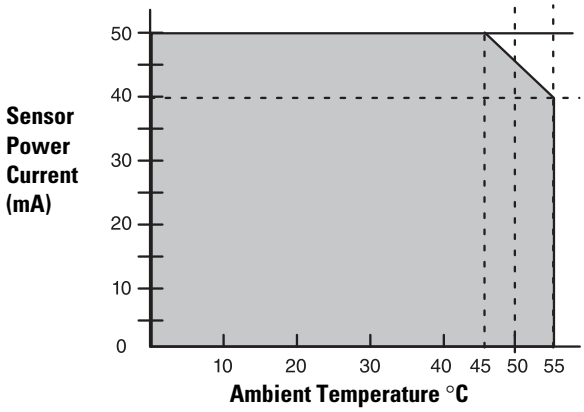

FLEX I/O Digital DC Combination Modules

The 1794-IB16XOB16P module has outputs that are self-protected against shorts, overload, and over temperature similar to the 1794-OB16P module.

The 1794-IB10XOB6 module requires the use of external fusing for individual outputs.

The 1794-IB10XOB6XT module is the extended temperature version of the 1794-IB10XOB6 module.

Digital DC Combination Modules

Specification	1794-IB10XOB6, 1794-IB10XOB6XT(2)	1794-IB16XOB16P(3)
Terminal base unit	1794-TB2, 1794-TB3, 1794-TB3S, 1794-TB3K, 1794-TB3SK	1794-TB32, 1794-TB32S
Isolation voltage	50V (continuous), Basic Insulation Type Type tested at 1250V AC for 60 s, between field side and system Routine tested at 2121V DC for 1 s, between field side and system No isolation between individual channels	50V (continuous), Basic Insulation Type Tested at 2121V DC for 1 s, system to I/O and inputs to outputs
Power dissipation, max	6.0 W @ 31.2V DC	7.0 W @ 31.2V DC
Thermal dissipation, max	20.3 BTU/hr @ 31.2V DC	23.9 BTU/hr @ 31.2V DC
Number of inputs	10	16
Voltage, on-state input, min	10V DC	
Voltage, on-state input, nom	24V DC	
Voltage, on-state input, max	31.2V DC	
Current, on-state input, min	2.0 mA	
Current, on-state input, nom	8.0 mA @ 24V DC	
Current, on-state input, max	11.0 mA	12.1 mA
Voltage, off-state input, max	5V DC	
Current, off-state input, max	1.5 mA	
Input impedance, max	4.8 kΩ	2.5 kΩ
Number of outputs	6	16
Voltage, on-state output, min	10V DC	
Voltage, on-state output, nom	24V DC	
Voltage, on-state output, max	31.2V DC	
Voltage drop, on-state output, max	1V DC @ 2 A 0.5V DC @ 1 A	0.5V DC @ 0.5 A
Current, on-state output, min	1.0 mA per channel	
Current, on-state output, max	2.0 A per channel 10 A per module	0.5 A per channel 8 A per module

Digital DC Combination Modules

Specification	1794-IB10XOB6, 1794-IB10XOB6XT(2)	1794-IB16XOB16P(3)
Voltage, off-state output, max	31.2V DC	
Leakage current, off-state output, max	0.5 mA	
Output delay time, OFF to ON, max(1)	0.5 ms	
Output delay time, ON to OFF, max	1.0 ms	
Output surge current, max	4 A for 50 ms repeatable every 2 s	1.5 A for 50 ms repeatable every 2 s
Voltage, off-state input, max	5.0V DC	
Current, on-state input, min	7.1 mA	5.5 mA @ 74V AC, 47 Hz
Current, off-state input, min	1.5 mA	
Dimensions (HxWxD), approx	46 x 94 x 53 mm (1.8 x 3.7 x 2.1 in.) 94 x 94 x 69 mm (3.7 x 3.7 x 2.7 in.) installed	
External DC supply voltage range	10…31.2V DC (includes 5% AC ripple)	
External DC supply current range	8 mA @ 10V DC 15 mA @ 19.2V DC 19 mA @ 24V DC 25 mA @ 31.2V DC	78 mA @ 10V DC
Temperature, operating	**1794-IB10XOB6:** -20…+55 °C (-4…+131 °F) **1794-IB10XOB6XT:** -20…+70 °C (-4…+158 °F)	0…55 °C (32…131 °F)

(1) Output OFF to ON or ON to OFF delay is the time from the module issuing an output on or off until the output actually turns on or off

(2) Module outputs are not fused. Fusing is recommended. If fusing is desired, you must supply external fusing. Use SAN-O MQ4-3A or Littelfuse 235-003.

(3) Outputs are electronically protected against overloads and shorts.

FLEX I/O Digital Contact Output Modules (Relay)

The 1794-OW8 module provides 8 isolated Form A (normally open) contacts capable of switching up to 2 A at up to 230V AC and 125V DC.

Do not attempt to increase load current or wattage capability beyond the maximum rating by connecting two or more outputs in parallel. The slightest variation in relay switching time may cause one relay to momentarily switch the total load current. Apply only +24V DC power to the power terminals on the terminal base. Make certain that all relay wiring is properly connected before applying any power to the module.

Total current draw through the terminal base unit is limited to 10 A. Separate power connections to the terminal base unit may be necessary.

The use of external fuses or a fused terminal base is required for individual outputs.

The 1794-OW8XT module is the extended temperature version of the 1794-OW8 module. The module is conformal coated.

Digital Contact Output Modules

Specification	1794-OW8	1794-OW8XT
Number of outputs	8	
Terminal base unit	1794-TB2, 1794-TB3, 1794-TB3S, 1794-TBN, 1794-TBNF, 1794-TB3K, 1794-TB3SK, 1794-TBNKF	
External DC supply voltage range	19.2…31.2V DC (includes 5% AC ripple)	
External DC supply current, nom	125 mA	
Leakage current, off-state output, max	1 mA @ 240V AC (through a snubber)	
Output delay time, OFF to ON, max	10 ms(1)	
Output delay time, ON to OFF, max	10 ms(2)	
Relay output current rating, resistive	2.0 A @ 5…30V DC 0.22 A @ 125V DC 2.0 A @ 125V AC 2.0 A @ 250V AC	
Relay output current rating, inductive	0.98 A steady state @ 5…30V DC, L/R = 7ms 0.5 A steady state @ 48V DC, L/R = 7ms 0.22 A steady state @ 125V DC, L/R = 7ms 2.0 A steady state, 15 A make @ 120V AC, PF = cos θ = 0.35 2.0 A steady state, 7.5 A make @ 240V AC, PF = cos θ = 0.35	
Contact resistance, initial	30 mΩ	
Switching frequency	0.3 Hz (1 operation every 3 s)	
Bounce time, mean	1.2 ms	
Contact load, min	100 µA @ 100 mV DC	
Mechanical life	100,000 operations at rated loads	
Fusing	3.0 A. 250V AC slow blow fuse (Littelfuse part number 239003).	
Power dissipation, max	5.5 W @ 31.2V DC	
Thermal dissipation, max	18.8 BTU/hr @ 31.2V DC	
Dimensions (HxWxD), approx	46 x 94 x 53 mm (1.8 x 3.7 x 2.1 in.) 94 x 94 x 69 mm (3.7 x 3.7 x 2.7 in.) installed	
Isolation voltage	250V (continuous), Basic Insulation Type, relay to relay, relay to backplane, and relay to power 50V (continuous), Basic Insulation Type, power to backplane Type tested at 1500V AC for 60 s, relay to relay, all combinations. Type tested at 3250V DC for 60 s, relay to backplane and relay to power Type tested at 720V DC for 60 s, power to backplane.	
Temperature, operating	-20…+55 °C (-4…+131 °F)	-20…+70 °C (-4…+158 °F)

(1) time from valid output on signal to relay energization by module.

(2) time from valid output off signal to relay deenergization by module.

FLEX I/O Analog, Thermocouple and RTD Modules

Choose analog, thermocouple, or RTD I/O modules when you need:

- **Individually configurable channels** allow the module to be used with a variety of sensors.
- **Online configuration**. Modules can be configured in RUN mode using programming software or the control program. This allows you to change configuration while the system is operating.
- **Selectable input filters** on many modules allow you to select from several different filter frequencies for each channel that best meets the performance needs of your application. Lower filter settings provide greater noise rejection and resolution. Higher filter settings provide faster performance. *Note: Isolated analog modules have four filter selections; the thermocouple module has ten; and the combined RTD/thermocouple module has eight.*
- **Ability to direct output device operation during an abnormal condition.**
  Each channel of the output module can be individually configured to hold its last value or assume a user-defined value on either a run-to-program or run-to-fault condition. This feature allows you to set the condition of your analog devices, and therefore your control process, which may help to ensure a reliable shutdown.
- **Selectable response to broken input sensor.** This feature provides feedback to the controller that a field device is not connected. This allows you to specify corrective action based on the channel condition.
- **Single-ended or differential inputs depending on module.** Analog modules have single-ended inputs while isolated analog and temperature modules have differential inputs. Single-ended voltage sensors reduce costs. Differential inputs are more expensive, but are typically more noise immune.
- **Over- and under-range detection and indication** are available with most modules. This eliminates the need to test values in the control program. While standard analog modules have limited diagnostics, temperature and isolated analog modules provide over-range, under-range, and wire-off diagnostics with alarm bits.
- **On-board scaling** is performed by the temperature modules and is user configurable for either °C, °F, °K, Ohms, or mV. This eliminates the need to scale the data in the user program.
- **Accuracy and resolution varies by module** and the associated application. Specifications are given for each module at it's operational conditions.
- **Internal calibration is performed** in the analog modules (1794-IE8, 1794-OE4, and 1794-IE4XOE2). User calibration is recommended (yearly) for isolated analog and temperature modules. All modules come factory calibrated.

Analog I/O Module Summary

Catalog Number	Inputs	Outputs	Terminal Base Unit	Module Type
1794-IE8	8	—	1794-TB2, 1794-TB3, 1794-TB3S, 1794-TB3T, 1794-TB3TS	Selectable, non-isolated inputs
1794-IE8XT			1794-TB2, 1794-TB3, 1794-TB3S, 1794-TB3T, 1794-TB3TS	Selectable, non-isolated inputs, Extended temperatures
1794-IE8H			1794-TB3G, 1794-TB3GS, 1794-TB3GK, 1794-TB3GSK	Single-ended, non-isolated, HART-enabled inputs
1794-IE12	12			Single-ended inputs
1794-IF4I	4	—	1794-TBN, 1794-TB2, 1794-TB3, 1794-TB3S, 1794-TB3T, 1794-TB3TS, 1794-TBNK, 1794-TB3K, 1794-TB3SK, 1794-TB3TK, 1794-TB3TSK	Single-ended, isolated inputs
1794-IF4IXT				Single-ended inputs, Isolated, Extended temperatures
1794-IF4ICFXT	4	—	1794-TB2, 1794-TB3, 1794-TB3S, 1794-TB3T, 1794-TB3TS, 1794-TBN	Isolated input
1794-IF8IH	8	—	1794-TB3, 1794-TB3S, 1794-TB3K, 1794-TB3SK	Single-ended, isolated, HART-enabled inputs
1794-IR8			1794-TB2, 1794-TB3, 1794-TB3S, 1794-TB3T, 1794-TB3TS, 1794-TBKD, 1794-TB3K, 1794-TB3SK, 1794-TB3TK, 1794-TB3TSK	Non-isolated relay inputs
1794-IRT8			1794-TB3G, 1794-TB3GS, 1794-TB3GK, 1794-TB3GSK, 1794-TB3GT (series B only)	Non-isolated RTD/Thermocouple inputs
1794-IRT8XT				Non-isolated RTD/Thermocouple inputs, Extended temperatures
1794-IT8			1794-TB2, 1794-TB3, 1794-TB3S, 1794-TB3T, 1794-TB3TS, 1794-TB3K, 1794-TB3SK, 1794-TB3TK, 1794-TB3TSK(3)	Non-isolated, Thermocouple, Millivolt inputs
1794-IE4XOE2	4	2		Single-ended, non-isolated I/O
1794-IE4XOE2XT				Single-ended, non-isolated I/O, Extended temperatures
1794-IE8XOE4	8	4	1794-TB3G, 1794-TB3GS, 1794-TB3GK, 1794-TB3GSK	Single-ended, non-isolated I/O
1794-IF2XOF2I	2	2	1794-TBN, 1794-TB2, 1794-TB3, 1794-TB3S, 1794-TB3T, 1794-TB3TS, 1794-TBNK, 1794-TB3K, 1794-TB3SK, 1794-TB3TK, 1794-TB3TSK	Single-ended, isolated I/O
1794-IF2XOF2IXT				Single-ended, isolated I/O, Extended temperatures
1794-OE4	—	4		Selectable, non-isolated outputs
1794-OE4XT				Selectable, non-isolated outputs, Extended temperatures
1794-OE8H(1)		8	1794-TB3G, 1794-TB3GS, 1794-TB3GK, 1794-TB3GSK	Single-ended, non-isolated, HART-enabled outputs
1794-OE12(2)		12		Single-ended, non-isolated outputs
1794-OF4I		4	1794-TBN, 1794-TB2, 1794-TB3, 1794-TB3S, 1794-TB3T, 1794-TB3TS, 1794-TBNK, 1794-TB3K, 1794-TB3SK, 1794-TB3TK, 1794-TB3TSK	Source isolated outputs
1794-OF4IXT				Source isolated outputs, Extended temperatures
1794-OF8IH		8	1794-TB3, 1794-TB3S, 1794-TB3K, 1794-TB3SK	Single-ended, isolated, HART-enabled outputs

(1) Do not exceed length of 30 m (100 ft) for signal cabling.

(2) Not supported by 1747-SN or 1747-BSN for use on RIO with SLC controllers.

(3) 1794-TB2, 1794-TB3, 1794-TB3S for mV inputs only.

Modules Specifications

The following section shows more detailed module specifications in comparative groups to facilitate your selection based on your requirements.

FLEX I/O Analog Input Modules

Analog Input Comparison

Catalog Number	Input Signal Range	Accuracy Drift with Temperature	External DC Supply Current, Nom	Power Dissipation, Max	Thermal Dissipation, Max
1794-IE8[1]	4…20 mA 0…20 mA ±10V 0…10V	Current Input: 0.0407% Full Scale/°C Voltage Input: 0.0428% Full Scale/°C	60 mA @ 24V DC	3 W @ 31.2V DC	10.2 BTU/hr @ 31.2V DC
1794-IE8XT					
1794-IE8H	4…20 mA	0.05%/°C of output signal range	295 mA @ 24V DC	3.9 W	13.5 BTU/hr
1794-IE12	4…20 mA (user configurable) 0…20 mA (user configurable)	Current Input: 0.004% Full Scale/°C Voltage Input: 0.004% Full Scale/°C	30 mA @ 24V DC; 45 mA @ 10.0V DC	1.2 W @ 31.2V DC; 1.1 W @ 24V DC; 0.9 W @ 10.0V DC	4.1 BTU/hr @ 31.2V DC
1794-IF4I[1]	4…20 mA 0…20 mA ±20 mA ±10V 0…10V ±5V 0…5V	Current Input: 0.0038% Full Scale/°C Voltage Input: 0.0028% Full Scale/°C	80 mA @ 24V DC	2.0 W @ 31.2V DC	6.9 BTU/hr @ 31.2V DC
1794-IF4IXT					6.8 BTU/hr @ 31.2V DC
1794-IF4ICFXT					
1794-IF8IH	4…20 mA (user configurable) 0…20 mA (user configurable)	0.4% Full Scale for 0…55 °C	190 mA @ 24V DC	4.8 W @ 31.2V DC	6.8 BTU/hr @ 31.2V DC
1794-IR8[1][2]	1…433 Ω	—	140 mA @ 24V DC	3 W @ 31.2V DC	10.2 BTU/hr @ 31.2V DC
1794-IRT8[1][2]	-40…+100 mV DC for thermocouples 0…325 mV DC for RTDs 0…500 Ω for resistance range	—	85 mA @ 24V DC		
1794-IRT8XT			95 mA @ 24V DC		
1794-IT8[1][2]	±76.5 mV	—	150 mA @ 24V DC		
1794-IE8XOE4	4…20 mA (user configurable) 0…20 mA (user configurable)	Current Input or Output: 0.004% Full Scale @ 25 °C Voltage Input or Output: 0.004% Full Scale @ 25 °C	140 mA @ 24V DC; 280 mA @ 10.0V DC	3.0 W @ 31.2V DC; 2.3 W @ 24V DC; 2.0 W @ 10.0V DC	10.3 BTU/hr @ 31.2V DC
1794-IE4XOE2[1]	4…20 mA 0…20 mA ±10V 0…10V	Current Input: 0.0407% Full Scale/°C Voltage Input: 0.0428% Full Scale/°C Current Output: 0.0069% Full Scale/°C Voltage Output: 0.0045% Full Scale/°C	70 mA @ 24V DC	4.0 W @ 31.2V DC	13.6 BTU/hr @ 31.2V DC
1794-IE4XOE2XT			164 mA @ 10.5V DC		15.3 BTU/hr @ 31.2V DC
1794-IF2XOF2I[1]	4…20 mA 0…20 mA ±20 mA ±10V 0…10V ±5V 0…5V	Current Input: 0.0038% Full Scale/°C Voltage Input: 0.0028% Full Scale/°C Current Output: 0.0025% Full Scale/°C Voltage Output: 0.0012% Full Scale/°C	150 mA @ 24V DC	3.3 W @ 31.2V DC	11 BTU/hr @ 31.2V DC
1794-IF2XOF2IXT				2.0 W @ 31.2V DC	6.8 BTU/hr @ 31.2V DC

(1) Each module's channel is individually selectable or as a group of four.

(2) For the accuracy calculation, refer to the module's user manual.

1794-IE8 and 1794-IE8XT Analog 8 Input Module

The 1794-IE8 is a voltage/current measurement module that works with a variety of input sensors to measure input voltage in ±10V range or input current in the 0...20 mA range. Each channel is individually configurable for the desired input range. Use the 1794-IE8 with 2-, 3-, and 4-wire input sensor field devices.

The 1794-IE8XT module is the extended temperature version of the 1794-IE8 module. The module is conformal coated.

IMPORTANT Only connect either a voltage input or a current input per channel, not both.

Use caution to prevent ground loops when using a common ground, since the channels are not isolated.

Analog 8 Input Modules

Specification	1794-IE8 and 1794-IE8XT
Voltage, input, max overload	30V, single channel, continuous
Current, input, max overload	32 mA, single channel, continuous
Input impedance, nom	Current Input: 238 Ω Voltage Input: 100 kΩ
Input resolution	12 bits – unipolar 11 bits + sign – bipolar 5.13 µA/cnt 2.56 mV/cnt – unipolar 5.13 mV/cnt – bipolar
Data format	16-bit 2's complement, left-justified
Input conversion type	Successive approximation
Input conversion rate	256 µs all channels
Normal mode rejection ratio	Current input: -3 dB @ 9 Hz; -20 dB/decade -15.3 dB @ 50 Hz -16.8 dB @ 60 Hz Voltage input: -3 dB @ 17 Hz; -20 dB/decade -10 dB @ 50 Hz -11.4 dB @ 60 Hz
Calibration	None required
Step response to 63% of FS, input	Current input: 18.2 ms Voltage input: 9.4 ms
Dimensions (HxWxD), approx	46 x 94 x 53 mm (1.8 x 3.7 x 2.1 in.) 94 x 94 x 69 mm (3.7 x 3.7 x 2.7 in.) installed
Accuracy	Current input: 0.20% Full Scale @ 25 °C (77 °F) Voltage input: 0.20% Full Scale @ 25 °C (77 °F)(1)
Temperature, operating	**1794-IE8:** -20…+55 °C (-4…131 °F) **1794-IE8XT:** -20…+70 °C (-4…+158 °F)

(1) Includes offset, gain, non-linearity, and repeatability error terms

1794-IE8H HART Enabled Analog 8 Input Module

The 1794-IE8H is a HART enabled analog input module that works with HART enabled input sensors with input current in the 0...20 mA range. Use the 1794-IE8H with 2 or 3 wire transmitters. This module provides wire-off detection on a per-channel basis. The HART analog module can only be used on ControlNet or EtherNet/IP networks with one HART field device per channel.

HART Enabled Analog 8 Input Module

Specification	1794-IE8H
Voltage, input, max overload	—
Current, input, max overload	—
Isolation voltage	50V (continuous), Basic Insulation Type No isolation between individual channels
Input resolution	16 bits
Input resistance	—
Data format	Configurable
Input conversion type	—
Input conversion rate	10 ms (50 Hz) 8.33 ms (60 Hz)
Normal mode rejection ratio	—
Step response to 99% of FS, input	80 ms
Calibration	—
Dimensions (HxWxD), approx	46 x 94 x 75 mm (1.8 x 3.7 x 2.9 in.) 94 x 94 x 91 mm (3.7 x 3.7 x 3.6 in.) installed
Resolution	16 bit
Accuracy	Current input: 0.1% Full Scale @ 20 °C (68 °F)
Temperature, operating	-20…+55 °C (-4…+131 °F)

1794-IE12 Analog 12 Input Module

The 1794-IE12 is a voltage or current measurement module that measures input voltage in a ±10V range or current in the 0...20 mA range. Each channel is individually configurable and the out-of-range notification is by channel.

Analog 12 Input Module

Specification	1794-IE12
Voltage, input, max overload	30 continuous, single channel
Current, input, max overload	32 mA continuous, single channel
Isolation voltage	50 (continuous), Basic Insulation Type Type tested at 850V DC for 60 s, between field side and system No isolation between individual channels
Input resolution	320 µV/cnt 0.641µA/cnt

Analog 12 Input Module

Specification	1794-IE12
Input resistance	Current input: <100 Ω Voltage input: >1 MΩ
Data format	16 bits, 2's complement
Input conversion type	Successive approximation
Input conversion rate	8.0 ms all channels
Normal mode rejection ratio	Voltage/current terminal: -3 dB @ 0.05 Hz -20 dB/decade -52 dB @ 50 Hz -54 dB @ 60 Hz Voltage/current terminal with Quick Step: -3 dB @ 1.5 Hz; -20 dB/decade -29 dB @ 50 Hz -31 dB @ 60 Hz
Step response to 63% of FS, input	Current or voltage input: 1.3 s (0.09 s with Quick Step)
Calibration	None required
Dimensions (HxWxD), approx	46 x 94 x 53 mm (1.8 x 3.7 x 2.1 in.) 94 x 94 x 69 mm (3.7 x 3.7 x 2.7 in.) installed
Resolution	16 bit unipolar 15 bit + bipolar
Accuracy	Current input: 0.1% Full Scale @ 25 °C (77 °F) Voltage input: 0.1% Full Scale @ 25 °C (77 °F)(1)
Temperature, operating	20...+60 °C (-4...+140 °F)

(1) Includes offset, gain, non-linearity, and repeatability error terms

1794-IF4I and 1794-IF4IXT Isolated Analog 4 Input Module

The 1794-IF4I and 1794-IF4IXT are input modules with channel-to-channel isolation that work with a variety of input sensors to measure input voltage in ±10V range or input current in the 0...20 mA range. Each channel is individually configurable for the desired input range. Use the 1794-IF4I or 1794-IF4IXT with 2-, 3-, and 4-wire input sensor field devices.

The 1794-IF4IXT is the extended temperature version of the 1794-IF4I module.

Settings to these parameters affect all inputs set to 150 Hz, 300 Hz, or 600 Hz. The parameters do not affect channels set at 1200 Hz.

IMPORTANT Only connect either a voltage input or a current input per channel, not both.

Isolated Analog Input Modules

Specification	1794-IF4I, 1794-IF4IXT
Voltage, input, max overload	30V, single channel, continuous
Current, input, max overload	32 mA, single channel, continuous

Isolated Analog Input Modules

Specification	1794-IF4I, 1794-IF4IXT
Input resolution	16 bits – unipolar 15 bits + sign – bipolar 0.320 µA/cnt – unipolar 0.640 µA/cnt – bipolar 0.156 mV/cnt – unipolar 0.313 mV/cnt – bipolar
Input resistance	Current input: <100 Ω(1) Voltage input: >10 MΩ
Data format	2's complement 2's complement percent binary offset binary
Input conversion type	Sigma Delta
Input conversion rate	2.5/5.0/7.5 ms all channels
Normal mode rejection ratio	-3 dB @ 12 Hz (300 Hz conversion rate) -80.0 dB @ 50 Hz (300 Hz conversion rate)
Calibration	Factory calibrated(2)
Step response to 63% of FS, input	Current or voltage input: 1200 Hz conversion rate = 0.6 ms 600 Hz conversion rate = 6.7 ms 300 Hz conversion rate = 13.4 ms 150 Hz conversion rate = 26.7 ms
Dimensions (HxWxD), approx	46 x 94 x 53 mm (1.8 x 3.7 x 2.1 in.) 94 x 94 x 69 mm (3.7 x 3.7 x 2.7 in.) installed
Resolution	16 bit unipolar 15 bit + bipolar
Accuracy	Current input: 0.1% Full Scale @ 25 °C (77 °F) Voltage input: 0.1% Full Scale @ 25 °C (77 °F)(3)
Temperature, operating	**1794-IF4I:** 0…55 °C (32…131 °F) **1794-IF4IXT:** -20…+70 °C (-4…+158 °F)

(1) If 24V DC is removed from the module, input resistance = 10 kΩ.

(2) Can be calibrated in field when necessary.

(3) Includes offset, gain, non-linearity, and repeatability error terms

1794-IF4ICFXT FLEX XT I/O Isolated Input Analog Module

In addition to the features supported by the 1794-IF4I and 1794-IF4IXT modules, the 1794-IF4ICFXT features three additional parameters that allow additional control over the way the analog signals are processed by the module. The settings are at the module level.

Settings to these parameters affect all inputs set to 150 Hz, 300 Hz, or 600 Hz. The parameters do not affect channels set at 1200 Hz.

IMPORTANT Only connect either a voltage input or a current input per channel, not both.

Isolated Analog Input Modules

Specification	1794-IF4ICFXT
Maximum overload	30V continuous or 32 mA continuous, one channel at a time
Input resistance Voltage terminal Current terminal	 >10 MΩ <100 Ω(1)
Data format	2's complement 2's complement percent binary offset binary
Conversion type	Sigma Delta
Update rate	2.5/5.0/7.5 ms all channels (see input update rate table in publication 1794-IN130
Normal mode rejection ratio - voltage or current Terminal	-3 dB @ 12 Hz (300 Hz conversion rate) -80 dB @ 50 Hz (300 Hz conversion rate) -3 dB @ 6 Hz (150 Hz conversion rate) -80 dB @ 60 Hz (150 Hz conversion rate)
Calibration required	Factory calibrated. Can be calibrated in field when necessary
Step response to 63% - voltage or current terminal	1200 Hz conversion rate = 0.6 ms 600 Hz conversion rate = 06.7 ms 300 Hz conversion rate = 13.4 ms 150 Hz conversion rate = 26.7 ms
Dimensions (HxWxD), approx	46 mm x 94 mm x 75 mm (1.8 in. x 3.7 in. x 2.95 in.) with module installed in base
Resolution Voltage Current	16 bits - unipolar; 15 bits plus sign - bipolar 0.156 mV/cnt unipolar; 0313 mV/cnt bipolar 0.320 µA/cnt unipolar; 0.640 µA/cnt bipolar
Accuracy	
Temperature, operating	-20…+70 °C (-4…+158 °F)

(1) If 24V DC is removed from the module, input resistance = 10 kΩ.

1794-IF8IH HART Enabled Analog 8 Input Module

The 1794-IF8IH accepts up to 8 analog inputs. The inputs are isolated and will accept current in either of the following two ranges: 4...20 mA or 0...20 mA. The default input range is 0...20 mA. The inputs have both fixed hardware filters and selectable firmware digital filters.

HART Enabled Analog 8 Input Module

Specification	1794-IF8IH
Current input, max overload	32 mA DC continuous, for any or all channels
Isolation voltage	120V (continuous), Basic Insulation Type Type tested @ 1000V AC for 60 s, between user power to system, channel to system, and channel to channel
Input resolution	16 bits – unipolar 15 bits + sign – bipolar 0.320 µA/cnt unipolar 0.640 µA/cnt bipolar
Input resistance	249 Ω ±1%
Data format	Engineering Units Percent of Full Scale Proportional Count
Input conversion type	Sigma Delta Analog to Digital Converter
Normal mode rejection ratio	> 70 dB @ 50/60 Hz (4.17 Hz ADC conversion rate) > 65 dB @ 50/60 Hz (10.0 Hz ADC conversion rate) > 75 dB @ 50 Hz (16.7 Hz ADC conversion rate) > 85 dB @ 60 Hz (19.6 Hz ADC conversion rate)
Calibration	Factory calibrated(1)
Step response to 63% of FS, input	4.17 Hz conversion rate = 480 ms 10.0 Hz conversion rate = 200 ms 16.7 Hz conversion rate = 120 ms 19.6 Hz conversion rate = 101 ms 62 Hz conversion rate = 32 ms 470 Hz conversion rate = 4 ms
Dimensions (HxWxD), approx	46 x 94 x 75 mm (1.8 x.7 x 2.9 in.) 94 x 94 x 91 mm (3.7 x 3.7 x 3.6 in.) installed
Accuracy	0.1% Full Scale @ 25 °C
Temperature, operating	0…55 °C (32…131 °F)

(1) Can be calibrated in field when necessary.

1794-IR8 RTD Input Module

The 1794-IR8 is a temperature-measuring module that accepts 2- and 3-wire RTDs. use the 1794-IR8 in applications where channel fast-update rate is not required. If you need channel fast-update rates, use the 1794-IRT8 module described on page 54.

RTD Input Module

Specification	1794-IR8
Input resolution	16 bits across 435 Ω
Sensors supported	Resistance: 100 Ω Pt μ = 0.00385 Euro (-200…+870 °C) 100 Ω Pt μ = 0.003916 U.S. (-200…+630 °C) 200 Ω Pt μ = 0.00385 Euro (-200…+630 °C) 500 Ω Pt μ = 0.00385 U.S. (-200…+630 °C) 100 Ω Nickel μ = 0.00618 (-60…+250 °C) 120 Ω Nickel μ = 0.00672 (-60…+250 °C) 200 Ω Nickel μ = 0.00618 (-60…+250 °C) 500 Ω Nickel μ = 0.00618 (-60…+250 °C) 10 Ω Copper μ = 0.00427 (-200…+260 °C)
Data format	16 bits, 2's complement, left justified; Offset binary
Settling time	100% of final value available at system throughput rate
Normal mode rejection ratio	60 dB @ 60 Hz for A/D filter cutoff @ 15 Hz
Common mode rejection ratio	-120 dB @ 60 Hz -100 dB @ 50 Hz with A/D filter cutoff @ 10 Hz
Common mode voltage	0V between channels (common return)
Accuracy, normal mode (max)(1)	0.05% Full Scale (low humidity) without calibration
Accuracy, enhanced mode (typical)	0.01% Full Scale (low humidity) without calibration
System throughput, normal mode	Programmable from 28…325 ms/channel 325 ms (1 channel scanned) 2.6 s (8 channels scanned)
System throughput, enhanced mode	Programmable from 56…650 ms/channel 650 ms (1 channel scanned) 2.925 s (8 channels scanned)
Open RTD detection	Out of range upscale reading
Open circuit detection type	Available at system throughput rate
Overvoltage capability	35V DC, 25V AC continuous @ 25 °C 250V peak transient
Channel bandwidth	DC to 2.62 Hz (-3 dB)
RTD excitation current	718.39 μA
RFI immunity	Error of <1% of range @ 10V/m, 27…1000 MHz
Gain drift with temperature	Normal mode: 20 ppm/ °C max Enhanced mode: 10 ppm/ °C max
Dimensions (HxWxD), approx	46 x 94 x 53 mm (1.8 x 3.7 x 2.1 in.) 94 x 94 x 69 mm (3.7 x 3.7 x 2.7 in.) installed
Temperature, operating	-20…+55 °C (-4…+131 °F)

(1) The number is based on the hardware of the module only. Additional errors are introduced depending on the sensor used., environment, and other factors. Contact technical support for more information.

1794-IR8 Derating Curve

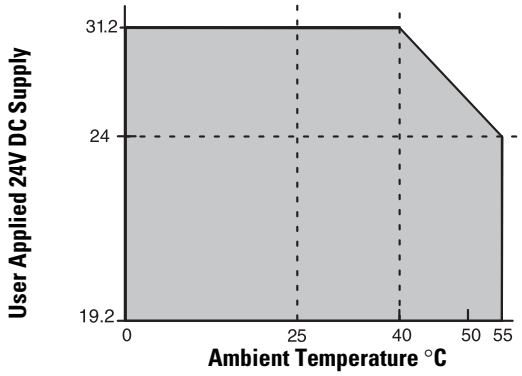

The area within the curve represents the safe operating range for the module under various conditions of user supplied 24V DC supply voltages and ambient temperatures.

= Safe operating area

1794-IRT8 and 1794-IRT8XT Thermocouple/RTD Input Module

The 1794-IRT8 is a high-speed, high-accuracy temperature/mV measuring module that accepts thermocouple inputs, 2-, 3-, and 4-wire RTD inputs, and mV source inputs.

The 1794-IRT8 offers the following:

- wire-off, over-range, and under-range detection
- good common mode rejection
- usage with long thermocouple wiring
- effective in noisy environments
- usage with grounded or ungrounded thermocouples
- more stability with ambient temperature changes than with the 1794-IR8 and the 1794-IT8

Release of Series B version provides capability to work with grounded thermocouples.

Use cold junction compensators 1794-CJC2 in thermocouple mode. Two cold junction compensators are shipped with the 1794-IRT8.

The 1794-IRT8XT is the extended temperature version of the 1794-IRT8 module. The module is conformal coated.

Thermocouple/RTD Input Module

Specification	1794-IRT8 and 1794-IRT8XT
Input resolution	14 bits
Supported RTD types	Resistance: 100 Ω Pt μ = 0.00385 Euro (-200…+870 °C) 100 Ω Pt μ = 0.003916 U.S. (-200…+630 °C) 200 Ω Pt μ = 0.00385 Euro (-200…+400 °C) 200 Ω Pt μ = 0.003916 U.S. (-200…+400 °C) 100 Ω Nickel μ = 0.00618 (-60…+250 °C) 120 Ω Nickel μ = 0.00672 (-60…+320 °C) 200 Ω Nickel μ = 0.00618 (-60…+200 °C) 10 Ω Copper μ = 0.00427 (-200…+260 °C)
Supported Thermocouple types	Type B: 300…1800 °C (572…3272 °F) Type E: -270…+1000 °C (-454…+1832 °F) Type J: -210…+1200 °C (-346…+2192 °F) Type K: -270…+1372°C (-454…+2502 °F) Type N: -270…+1300°C (-454…+2372 °F) Type R: -50…+1768°C (-58…+3214 °F) Type S: -50…+1768°C (-58…+3214 °F) Type T: -270…+400°C (-454…+752 °F) Type TXK/XK (L): -200…+800°C (-328…+1472 °F)
Accuracy	0.05% of full range in mV mode with filtering selected Hardware only = 0.10% of full rang in mV mode
Common mode rejection ratio	-80 dB @ 5V peak-to-peak 50…60 Hz
Common mode input range	Series A – ±4V Series B – ±15V
System throughput	7.4 ms – mV 8.0 ms – Ω – 2-wire 10.0 ms – Ω – 3-wire 10.4 ms – Ω – 4-wire 8.0 ms – Ω – 2-wire RTD (°F) 10.4 ms – Ω – 4-wire RDT (°F) 8.8 ms – Ω – 2-wire RDT (°C), (°K) 10.8 ms – Ω – 4-wire RDT (°C), (°K) 9.8 ms – Ω – 3-wire RDT (°F) 10.0 ms – Ω – 3-wire RDT (°C), (°K) 8.0 ms – Thermocouples (°F) 8.8 ms – Thermocouples (°C), (°K)(1)
Open circuit detection type	Series A: RTD and TC modes – open input – module defaults to max value Series B: RTD mode – open input – module defaults to max value Series B: TC mode – open input – module defaults to min value
Excitation current	630 μA
Overvoltage capability	Series A: 7V DC continuous @ 25 °C Series B: 15V DC continuous @ 25 °C
Open input detection time	0…3.8 s for Series A, revision D or earlier Immediate detection (max 2 scans) for Series A, revision E or later Immediate detection (max 2 scans) for Series B
Cold junction compensation range	0…70 °C for firmware Series A, revision D or earlier -20…100 °C for firmware Series A, revision E or later -20…100 °C for firmware Series B
Cold junction compensation	A-B Cold Junction Compensation Kit, 1794-CJC(2)

Thermocouple/RTD Input Module

Specification	1794-IRT8 and 1794-IRT8XT
Data format	°C (implied decimal point XXX.X) °F (implied decimal point XXX.X) °K (implied decimal point XXX.X) -32767…32767 0…65535 0…5000 (Ω mode) (implied decimal point XXX.X) -4000…10000 (mV mode) (implied decimal point XXX.XX)
Overall drift with temperature, max	Series A: 150 ppm/ °C of span Series B: 50 ppm/ °C of span
Dimensions (HxWxD), approx	46 x 94 x 53 mm (1.8 x 3.7 x 2.1 in.) 94 x 94 x 69 mm (3.7 x 3.7 x 2.7 in.) installed
Temperature, operating	**1794-IRT8:** -20…+55 °C (-4…+131 °F) **1794-IRT8XT:** -20…+70 °C (-4…+158 °F)

(1) For maximum throughput, short circuit all unused channels.

(2) Kit supplied with the module and contains 2 compensators.

1794-IT8 Thermocouple/mV Input Module

The 1794-IT8 module is a temperature/mV measuring module that accepts inputs from a variety of thermocouples and from the mV source in the range of ±76.5 mV. Choose the 1794-IT8 module when you need the following:

- A cost effective module.
- Applications that don't require high accuracy or high speed.
- Support for grounded or ungrounded thermocouples.

Use cold junction compensators (cat. no. 1794-CJC2) in thermocouple mode. Two cold junction compensators are shipped with the 1794-IT8 module. This module is suitable to work with grounded thermocouples, if certain guidelines are followed. Refer to the module's user manual for more information.

The FLEX I/O cold junction compensator kit, containing two compensators, is included with the 1794-IT8 module. You can order additional compensators using the above catalog number.

Thermocouple/mV Input Module

Specification	1794-IT8
Input resolution	16 bits (2.384 µV typical)
Supported Thermocouple types	Type B: 300…1800 °C (572…3272 °F) Type C: 0…2315 °C (32…4199 °F) Type E: -270…+1000 °C (-454…+1832 °F) Type J: -210…+1200 °C (-346…+2192 °F) Type K: -270…+1372°C (-454…+2502 °F) Type N: -270…+1300°C (-454…+2372 °F) Type R: -50…+1768°C (-58…+3214 °F) Type S: -50…+1768°C (-58…+3214 °F) Type T: -270…+400°C (-454…+752 °F) Type TXK/XK (L): -200…+800°C (-328…+1472 °F)

Thermocouple/mV Input Module

Specification	1794-IT8
Data format	16 bits, 2's complement; Offset binary (unipolar)
Settling time	100% of final value available at system throughput rate
Normal mode rejection ratio	60 dB @ 60 Hz
Common mode rejection ratio	-115 dB @ 60 Hz -100 dB @ 50 Hz
Common mode input range	± 10V
Accuracy(1)	With filter (max): 0.025% Full Scale @ 24 °C (±0.5 °C) Without filter (max): 0.05% Full Scale @ 24 °C (±0.5 °C)
System throughput	325 ms (1 channel scanned), programmable to 28 ms 2.6 s (8 channels scanned), programmable to 224 ms
Open input detection	Available at system throughput rate
Open circuit detection type	Out of range reading (upscale)
Overvoltage capability	35V DC, 25V AC continuous @ 25 °C 250V peak transient
Channel bandwidth	0…2.62 Hz (-3 dB)
RFI immunity	Error of <1% of range @ 10V/m, 27…1000 MHz
Input offset drift with temperature	+6 µV/°C max
Gain drift with temperature, max	10 ppm/ °C
Overall drift with temperature, max	50 ppm/ °C of span
Cold junction compensation range	0…70 °C
Cold junction compensation	A-B Cold Junction Compensation Kit, 1794-CJC(2)
Dimensions (HxWxD), approx	46 x 94 x 53 mm (1.8 x 3.7 x 2.1 in.) 94 x 94 x 69 mm (3.7 x 3.7 x 2.7 in.) installed
Temperature, operating	-20…+55 °C (-4…+131 °F)

(1) The number is based on the hardware of the module only. Refer to the user manual for the complete error calculation procedure.

(2) Kit supplied with the module and contains 2 compensators.

1794-IRT8 Derating Curve

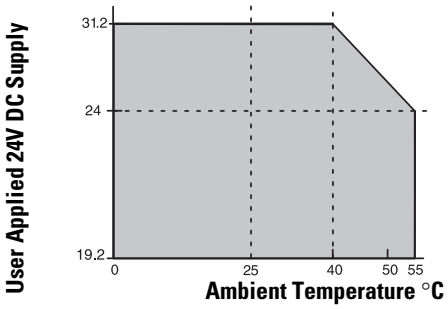

The area within the curve represents the safe operating range for the module under various conditions of user supplied 24V DC supply voltages and ambient temperatures.

= Safe operating area

1794-IE8XOE4 8 Input/4 Output Analog Combination Module

The 1794-IE8XOE4 is a combination module with 8 inputs and 4 outputs. Inputs can be configured individually for different modes, as can outputs. Inputs accept signals from 2, 3, and 4 wire input sensors in the ranges of ±10V or 0... 20 mA. Outputs produce signals in the range of ±10V or 0...20 mA.

8 Input / 4 Output Analog Combination Module

Specification	1794-IE8XOE4
Calibration	None required
Input conversion type	Successive approximation
Input conversion rate	8 ms all channels
Input resolution	16 bit, 2's complement 320 µV/cnt 0.641 µA/cnt
Data format	16 bits, 2's complement
Step response to 63% of FS, input	Current or voltage input: 1.3 s (0.09 s with Quick Step)
Step response to 63% of FS, output	-70% 1st convert 96% 2nd convert 100% 3rd convert
Normal mode rejection ratio	Voltage/current terminal: -3 dB @ 0.05 Hz; -20 dB/decade -52 dB @ 50 Hz -54 dB @ 60 Hz Voltage/current terminal with Quick Step: -3 dB @ 1.5 Hz; -20 dB/decade -29 dB @ 50 Hz -31 dB @ 60 Hz
Accuracy(1)	Current input or output: 0.1% Full Scale @ 25 °C Voltage input or output: 0.1% Full Scale @ 25 °C
Accuracy drift with temperature	Current input or output: 0.004% Full Scale @ 25 °C Voltage input or output: 0.004% Full Scale @ 25 °C
Input impedance(2)	Current input: <100 Ω Voltage input: >1 MΩ
Voltage input, overload, max	30V, single channel, continuous
Output resolution	16 bit, 2's complement 320 µV/cnt 0.641 µA/cnt
Output conversion type	Digital-to-analog converter
Output conversion rate	Outputs: DAC
Current load on voltage output, max	3 mA
Resistive load on current output	0…750 Ω over full power supply range
Dimensions (HxWxD), approx	46 x 94 x 53 mm (1.8 x 3.7 x 2.1 in.) 94 x 94 x 69 mm (3.7 x 3.7 x 2.7 in.) installed
Temperature, operating	-20...+60 °C (-4...+140 °F)

(1) Includes offset, gain, non-linearity and repeatability error terms.

(2) If 24V DC is removed from the module, input resistance = 10 KΩ.

1794-IE4XOE2 and 1794-IE4XOE2XT 4 Input/2 Output Analog Combination Modules

The 1794-IE4XOE2 is a combination module with 4 inputs and 2 outputs. Inputs can be configured individually for different modes. Inputs accept signals from a variety of inputs sensors (2-, 3-, and 4-wire) in the range of ±10V or 0...20 mA. Outputs are also individually configurable for different modes. Outputs produce signals in the range of ±10V or 0...20 mA.

1794-IE4XOE2XT is the extended temperature version of the 1794-IE4XOE2.

4 Input / 2 Output Analog Combination Modules

Specification	1794-IE4XOE2, 1794-IE4XOE2XT
Calibration	None required
Input conversion type	Successive approximation
Input conversion rate	256 µs all channels
Input resolution	12 bits – unipolar 11 bits + sign – bipolar 5.13 µA/cnt 2.56 µV/cnt – unipolar 5.13 µV/cnt – bipolar
Data format	16 bits, 2's complement; left-justified
Step response to 63% of FS, input	Current input: 18.2 ms Voltage input: 9.4 ms
Step response to 63% of FS, output	Current or voltage output: 24 ms
Normal mode rejection ratio	Current input: -3 dB @ 9 Hz; -20 dB/decade -15.3 dB @ 50 Hz -16.8 dB @ 60 Hz Voltage input: -3 dB @ 17 Hz; -20 dB/decade -10 dB @ 50 Hz -11.4 dB @ 60 Hz
Accuracy(1)	Current input: 0.20% Full Scale @ 25 °C Voltage input: 0.20% Full Scale @ 25 °C Current output: 0.425% Full Scale @ 25 °C Voltage output: 0.133% Full Scale @ 25 °C
Accuracy drift with temperature	Current input: 0.0407% Full Scale @ 25 °C Voltage input: 0.0428% Full Scale @ 25 °C Current output: 0.0069% Full Scale @ 25 °C Voltage output: 0.0045% Full Scale @ 25 °C
Input impedance	Current input: 238 Ω Voltage input: 100 kΩ
Voltage input, overload, max	30V, single channel, continuous
Output resolution	12 bits + sign 5.13 µA/cnt 2.56 mV/cnt
Output conversion type	Pulse width modulation
Output conversion rate	1.024 ms all channels
Current load on voltage output, max	3 mA
Resistive load on current output	15…750 Ω

4 Input / 2 Output Analog Combination Modules

Specification	1794-IE4XOE2, 1794-IE4XOE2XT
Dimensions (HxWxD), approx	46 x 94 x 53 mm (1.8 x 3.7 x 2.1 in.) 94 x 94 x 69 mm (3.7 x 3.7 x 2.7 in.) installed
Temperature, operating	**1794-IE4XOE2:** -20…+55 °C (-4…+131 °F) **1794-IE4XOE2XT:** -20…+70 °C (-4…+158 °F)

(1) Includes offset, gain, non-linearity and repeatability error terms.

1794-IF2XOF2I and 1794-IF2XOF2IXT 2 Input/2 Output Isolated Analog Combination Module

The 1794-IF2XOF2I is a combination module with 2 inputs and 2 outputs with isolated, individually-configurable channels. Inputs accept signals from a variety of input sensors (2-, 3-, and 4-wire) in the range of ±10V or ±20 mA. Outputs produce signals in the range of ±10V or 0...20 mA.

The 1794-IF2XOF2IXT is the extended temperature version of the 1794-IF2XOF2I module.

ATTENTION: Only connect either a voltage input or a current input per channel, not both.

2 Input/2 Output Isolated Combination Module

Specification	1794-IF2XOF2I, 1794-IF2XOF2IXT
Calibration	Factory calibration(2)
Input conversion type	Sigma Delta
Input conversion rate	2.5/5.0/7.5 ms all channels
Input resolution	16 bit – unipolar 15 bit + sign – bipolar 0.156 mV/cnt – unipolar 0.313 mV/cnt – bipolar 0.320 µA/cnt – unipolar 0.640 µA/cnt – bipolar
Isolation voltage	120V continuous (when used with 1794-TB3, 1794-TB3S, 1794-TB2, 1794-TB3T, or 1794-TB3TS) 250V continuous (when used with 1794-TBN) Tested at 1500V AC for 60 s and 2550V DC for 1 s, channel to channel, I/O to system
Data format	16 bits, 2's complement 2's complement percent binary offset binary
Step response to 63% of FS, input	Current or voltage input: 1200 Hz conversion rate = 0.6 ms 600 Hz conversion rate = 6.7 ms 300 Hz conversion rate = 13.4 ms 150 Hz conversion rate = 26.7 ms

2 Input/2 Output Isolated Combination Module

Specification	1794-IF2XOF2I, 1794-IF2XOF2IXT
Normal mode rejection ratio	-3 dB @ 12 Hz (300 Hz conversion rate) -80.0 dB @ 50 Hz (300 Hz conversion rate) -3 dB at 6 Hz (150 Hz conversion rate) -80 dB at 60 Hz (150 Hz conversion rate)
Accuracy(1)	Current input or output: 0.1% Full Scale @ 25 °C Voltage input or output: 0.1% Full Scale @ 25 °C
Accuracy drift with temperature	Current input: 0.0038% Full Scale/°C Voltage input: 0.0028% Full Scale /°C Current output: 0.0025% Full Scale /°C Voltage output: 0.0012% Full Scale /°C
Input impedance	Current input: <100 Ω Voltage input: >1 MΩ(3)
Voltage input, overload, max	30V, single channel, continuous
Output resolution	15 bit + sign 0.656 µA/cnt 0.320 mV/cnt
Output conversion type	Digital-to-analog converter
Output conversion rate	2.5/5.0 ms
Current load on voltage output, max	3 mA
Resistive load on current output	0…750 Ω
Dimensions (HxWxD), approx	**1794-IF2XOF2I:** 46 x 94 x 53 mm (1.8 x 3.7 x 2.1 in.) 94 x 94 x 69 mm (3.7 x 3.7 x 2.7 in.) installed **1794-IF2XOF2IXT:** 46 x 94 x 75 mm (1.8 x 3.7 x 2.9 in.) 94 x 94 x 91 mm (3.7 x 3.7 x 3.6 in.) installed
Temperature, operating	**1794-IF2XOF2I:** -20…+55 °C (-4…+131 °F) **1794-IF2XOF2IXT:** -20…+70 °C (-4…+158 °F)

(1) Includes offset, gain, non-linearity and repeatability error terms.

(2) Can be calibrated in field when necessary.

(3) If 24V DC is removed from the module, input resistance = 10 KΩ.

FLEX I/O Analog Output Modules

Analog Output Comparison

Catalog Number	Output Signal Range	External DC Supply Current, Nom	Power Dissipation, Max	Thermal Dissipation, Max
1794-OE4(1)	4…20 mA 0…20 mA ±10V 0…10V	70 mA @ 24V DC(2)	4.5 W @ 31.2V DC	15.3 BTU/hr @ 31.2V DC
1794-OE4XT		180 mA @ 10.5V DC		13.6 BTU/hr @ 31.2V DC
1794-OE8H	4…20 mA (user configurable) 0…20 mA (user configurable)	255 mA @ 24V DC	6.1 W	20.8 BTU/hr
1794-OE12	0 mA output until module is configured 4…20 mA (user configurable) 0…20 mA (user configurable)	320 mA @ 24V DC; 720 mA @ 10.0V DC	40 W @ 31.2V DC; 4.3 W @ 24V DC; 10.0 W @ 10.0V DC	14.7 BTU/hr @ 24V DC

Analog Output Comparison

Catalog Number	Output Signal Range	External DC Supply Current, Nom	Power Dissipation, Max	Thermal Dissipation, Max
1794-OF4I	4…20 mA 0…20 mA ±10V 0…10V ±5V 0…5V	210 mA @ 24V DC	4.7 W @ 31.2V DC	16 BTU/hr @ 31.2V DC
1794-OF8IH	4…20 mA (user configurable) 0…20 mA (user configurable)	450 mA @ 24V DC	5.0 W @ 31.2V DC	6.8 BTU/hr @ 31.2V DC
1794-IE8XOE4(1)	4…20 mA 0…20 mA ±10V 0…10V	140 mA @ 24V DC; 280 mA @ 10.0V DC	3.0 W @ 31.2V DC; 2.3 W @ 24V DC; 2.0 W @ 10.0V DC	10.3 BTU/hr @ 31.2V DC
1794-IE4XOE2(1)	4…20 mA 0…20 mA ±10V 0…10V	70 mA @ 24V DC	4.0 W @ 31.2V DC	13.6 BTU/hr @ 31.2V DC
1794-IF2XOF2I(1)	4…20 mA 0…20 mA ±10V 0…10V ±5V 0…5V	150 mA @ 24V DC	3.3 W @ 31.2V DC	11 BTU/hr @ 31.2V DC

(1) Each module's channel is individually selectable or as a group of four.

(2) Not including outputs.

1794-OE4 and 1794-OE4XT Analog 4 Output Module

The 1794-OE4 module has 4 output, non-isolated, individually-configurable channels. Outputs are capable of driving the field devices that require a voltage of ±10V or a current of 0... 20 mA.

Analog 4 Input Modules

Specification	1794-OE4	1794-OE4XT
Output resolution	12 bit + sign 2.56 mV/cnt 5.13 µA/cnt	12 bits + sign 0.156 mV/cnt 0.320 µA/cnt
Data format	16 bits, 2's complement, left-justified	
Output conversion type	Pulse width modulation	
Output conversion rate	1.024 ms all channels	Outputs: PWM
Step response to 63% of FS, output	Voltage output: 24 ms	
Current load on voltage output, max	3 mA	
Output current, resistive load	15…750 Ω	
Accuracy	Current input: 0.425% Full Scale @ 25 °C (77 °F) Voltage input: 0.133% Full Scale @ 25 °C (77 °F)(1)	

Analog 4 Input Modules

Specification	1794-OE4	1794-OE4XT
Accuracy drift w/temp	Current input: 0.0069% Full Scale /°C Voltage input: 0.0045% Full Scale/°C	
Calibration	None required	
Isolation voltage	50 (continuous), I/O to system Type tested at 850V DC for 1 s, I/O to system Type tested at 850V DC for 60 s (for 1794-OE4XT only) No isolation between individual channels	
Power dissipation, max	4.5 W @ 31.2V DC	
Thermal dissipation, max	15.3 BTU/hr @ 31.2V DC	13.6 BTU/hr @ 31.2V DC
Wire size	0.34…2.5 mm^2 (22…2 AWG) solid or stranded shielded copper wire rated at 75 °C (167 °F) or greater 1.2 mm (3/64 in.) insulation max	
Wire category	2 – on signal ports 2 – on power ports(2)	2 - on signal ports
Dimensions (HxWxD), approx	46 x 94 x 53 mm (1.8 x 3.7 x 3.1 in.) 94 x 94 x 69 mm (3.7 x 3.7 x 2.7 in.) installed	
Temperature, operating	-20…+55 °C (-4…+131 °F)	-20…+70 °C (-4…+158 °F)

(1) Includes offset, gain, non-linearity, and repeatability error terms

(2) Use this Conductor Category information for planning conductor routing. Refer to Industrial Automation Wiring and Grounding Guidelines, publication 1770-4.1.

1794-OE8H HART Enabled Analog 8 Output Module

The 1794-OE8H is a HART enabled analog output module that works with HART enabled field devices that use current in the 0...20 mA range. Use with 2 wire devices. This module provides wire-off detection on a per-channel basis.

This module can be used on ControlNet, EtherNet/IP, or PROFIBUS DP networks. One HART field device per channel.

HART Enabled Analog 8 Output Module

Specification	1794-OE8H
Output resolution	13 bit
Data format	Configurable
Output conversion type	—
Output conversion rate	10 ms for all channels
Step response to 99% of FS, output	13 ms to 99% of FS 115 ms during HART communication
Current load on voltage output, max	0…22 mA @ > 15V
Output current, resistive load	0…680 Ω @ 22 mA 0…770 Ω @ 20 mA
Accuracy	0.1% Full Scale @ 20 °C (68 °F)
Accuracy drift with temperature	0.010% Full Scale @ 20 °C (68 °F)

HART Enabled Analog 8 Output Module

Specification	1794-OE8H
Calibration	—
Isolation voltage	50V (continuous), Basic Insulation Type No isolation between individual channels
Power dissipation, max	6.1 W
Thermal dissipation, max	20.8 BTU/hr
Wire size	0.34…2.5 mm^2 (22...12 AWG) solid or stranded shielded copper wire rated at 75 °C (167 °F) or greater 1.2 mm (3/64 in.) insulation max
Wire category	2 – on signal ports 2 – on power ports(1)
Dimensions (HxWxD), approx	46 x 94 x 75 mm (1.8 x 3.7 x 2.95 in.) 94 x 94 x 91 mm (3.7 x 3.7 x 3.6 in.) installed
Temperature, operating	-20...+55 °C (-4...+131 °F)

(1) Use this Conductor Category information for planning conductor routing. Refer to Industrial Automation Wiring and Grounding Guidelines, publication 1770-4.1.

1794-OE12 Analog 12 Output Module

1794-OE12 module is a High Density analog output module, capable of providing current in the range of 0...20mA or voltage in the range of ±10V, depending on the user configuration. Out of Range status bit exists for each channel.

Analog 12 Output Module

Specification	1794-OE12
Output resolution	320 µV/cnt 0.641 µA/cnt
Data format	Configurable
Output conversion type	Digital to analog converter
Output conversion rate	Outputs: DAC
Step response to 63% of FS, output	~70% 1st convert 96% 2nd convert 100% 3rd convert
Current load on voltage output, max	3 mA
Output current, resistive load	0…750 Ω over full power supply range
Accuracy	Current Output: 0.1% Full Scale at 25 °C Voltage Output: 0.1% Full Scale at 25 °C
Accuracy drift w/temp	Current Output: 0.004% Full Scale/°C Voltage Output: 0.004% Full Scale/°C
Calibration	None required
Isolation voltage	50V (continuous), Basic Insulation Type Type tested at 850V DC for 60 s, between field side and system No isolation between individual channels

Analog 12 Output Module

Specification	1794-OE12
Power dissipation, max	4.0 W @ 31.2V DC 4.3 W @ 24V DC 4.0 W @ 10.0V DC
Thermal dissipation, max	14.7 BTU/hr @ 24V DC
Wire size	0.34…2.5 mm^2 (22...12 AWG) solid or stranded shielded copper wire rated at 75 °C (167 °F) or greater 1.2 mm (3/64 in.) insulation max
Wire category	2 – on signal ports 2 – on power ports(1)
Dimensions (HxWxD), approx	46 x 94 x 53 mm (1.8 x 3.7 x 3.1 in.) 94 x 94 x 69 mm (3.7 x 3.7 x 2.7 in.) installed
Temperature, operating	-20...+60 °C (-4...+140 °F)

(1) Use this Conductor Category information for planning conductor routing. Refer to Industrial Automation Wiring and Grounding Guidelines, publication 1770-4.1.

1794-OF4I and 1794-OF4IXT Isolated Analog 4 Output Module

The 1794-OF4I module provides 4 isolated outputs for 2-, 3-, and 4-wire output devices that use voltage in the range of ±10V or 0...20 mA current.

1794-OF4IXT is the extended temperature version of the 1794-OF4I module.

Isolated Analog 4 Output Module

Specification	1794-OF4I, 1794-OF4IXT
Output resolution	15 bit + sign 0.656 µA/cnt 0.320 mV/cnt
Data format	2's complement 2's complement percent binary offset binary
Output conversion type	Digital to analog converter
Output conversion rate	2.5/5.0 ms
Step response to 63% of FS, output	Current or voltage output: <25 µs
Current load on voltage output, max	3 mA
Output current, resistive load	0…750 Ω
Accuracy	Current input: 0.1% Full Scale @ 25 °C (77 °F) Voltage input: 0.1% Full Scale @ 25 °C (77 °F)(1)
Accuracy drift w/temp	Current input: 0.0025% Full Scale /°C Voltage input: 0.0012% Full Scale/°C
Calibration	Factory calibrated

Isolated Analog 4 Output Module

Specification	1794-OF4I, 1794-OF4IXT
Isolation voltage	120V (continuous), when used with 1794-TB2, 1794-TB3, 1794-TB3S, 1794-TB3T, or 1794-TB3TS 250V (continuous), when used with 1794-TBN Type tested at 1500V AC for 60 s, and 2550V DC for 1 s, channel to channel, I/O to system
Power dissipation, max	4.7 W @ 31.2V DC
Thermal dissipation, max	16 BTU/hr @ 31.2V DC
Wire size	0.34... 2.5 mm^2 (22...12 AWG) solid or stranded shielded copper wire rated at 75 °C (167 °F) or greater 1.2 mm (3/64 in.) insulation max
Wire category	2 – on signal ports 3 – on power ports(2)
Dimensions (HxWxD), approx	**1794-OF4I:** 46 x 94 x 53 mm (1.8 x 3.7 x 3.1 in.) 94 x 94 x 69 mm (3.7 x 3.7 x 2.7 in.) installed **1794-OF4IXT:** 46 x 94 x 75 mm (1.8 x 3.7 x 2.95 in.) 94 x 94 x 91 mm (3.7 x 3.7 x 3.6 in.) installed
Temperature, operating	**1794-OF4I:** -20…+55 °C (-4…+131 °F) **1794-OF4IXT:** -20…+70 °C (-4…+158 °F)

(1) Includes offset, gain, non-linearity, and repeatability error terms

(2) Use this Conductor Category information for planning conductor routing. Refer to Industrial Automation Wiring and Grounding Guidelines, publication 1770-4.1.

1794-OF8IH HART Isolated Analog 8 Output Module

The 1794-OF8IH modules provides 8 HART enabled isolated outputs for 2-, 3-, and 4-wire output devices that use voltage in the range of ±10V or 0...20 mA current.

HART Enabled Isolated Analog 8 Output Module

Specification	1794-OF8IH
Output resolution	16 bits – unipolar 0.305 µA/cnt unipolar
Data format	Engineering units Percent of Full Scale RAW/proportional count
Output conversion type	16 Bit Digital to Analog Converter
Output conversion rate	10 ms
Step response to 63% of FS, output	< 70 ms
Output current, resistive load	0…750 Ω
Accuracy	± 0.1% Full Scale at 25 °C ± 0.35% Full Scale at 0…55 °C
Accuracy drift w/temp	± 0.008% /ºC 0.0038 Full Scale /°C
Calibration	Factory calibrated

HART Enabled Isolated Analog 8 Output Module

Specification	1794-OF8IH
Isolation voltage	120V (continuous), Basic Insulation Type Type tested at 1000V AC for 60 s, between user power to system, channel to system, and channel to channel
Power dissipation, max	5.0 W @ 31.2V DC
Thermal dissipation, max	16 BTU/hr @ 31.2V DC
Wire size	0.34... 2.5 mm^2 (22...12 AWG) solid or stranded shielded copper wire rated at 75 °C (167 °F) or greater 1.2 mm (3/64 in.) insulation max
Wire category	2 – on signal ports 3 – on power ports(1)
Dimensions (HxWxD), approx	46 x 94 x 75 mm (1.8 x 3.7 x 2.95 in.) 94 x 94 x 91 mm (3.7 x 3.7 x 3.6 in.) installed
Temperature, operating	0…55 °C (32…131 °F)

(1) Use this Conductor Category information for planning conductor routing. Refer to Industrial Automation Wiring and Grounding Guidelines, publication 1770-4.1.

FLEX I/O Counter Modules

In order to decide which FLEX I/O counter module would best suit your application needs, you should identify the following:

- What type of application the module will be used for
- What field devices, signal levels, and signal type are being connected to the counter module

Counter Module Comparison

Catalog Number	Application	Network Capability	Number of Inputs/ Outputs	External DC Supply Current, Nom	Power Dissipation, Max	Thermal Dissipation, Max
1794-IJ2 1794-IJ2XT	Rational control, including: • turbine generators • motors • drives • gears • shaft	All networks supported by FLEX I/O	2 Input 2 Output	220 mA @ 19.2V DC 180 mA @ 24V DC 140 mA @ 31.2V DC	4.5 W @ 31.2V DC	15.3 BTU/hr @ 31.2V DC
1794-VHSC	Applications including: • packaging • material handling • flow monitoring • cut-to-length • motor speed control • monitoring	ControlNet: • 1794-ACN15 • 1794-ACNR15 EtherNet/IP: • 1794-AENT • 1794-AENTR	2 Input 2 Output	100 mA @ 24V DC(1)	5 W @ 31.2V DC	17.1 BTU/hr @ 31.2V DC

Counter Module Comparison

Catalog Number	Application	Network Capability	Number of Inputs/ Outputs	External DC Supply Current, Nom	Power Dissipation, Max	Thermal Dissipation, Max
1794-ID2	Applications including: • quality counting • positioning • speed calculations	All networks supported by FLEX I/O	2 Input	150 mA @ 12V DC 75 mA @ 24V DC	5.0 W @ 26.4V DC	17.1 BTU/hr @ 26.4V DC
1794-IP4	Applications including: • counting pulse from flow meters • counting pulse from density meters • quality counting • speed calculations		4 Input			

(1) Does not represent power required to supply the inputs or outputs

1794-IJ2 and 1794-IJ2XT 24V DC Input Frequency Module

The 1794-IJ2 is essentially a tachometer with the capability of reporting frequency, acceleration, and direction. Outputs are activated by alarms. Input devices range from magnetic pickup to flowmeters, to incremental encoders to proximity detectors. This intelligent I/O module is designed to perform high-speed frequency algorithms. The module provides 2 frequency inputs, 2 gate inputs, and 2 outputs. The frequency inputs are capable of accepting frequencies up to 32 KHz. The module accepts and returns binary data.

The 1794-IJ2 measures frequency over a user-specified time interval. A frequency calculation can start before the time interval has elapsed, if a user-specified number of frequency input pulses have occurred.

The module's primary target is high-speed, accurate frequency measurement. As such, a high-speed internal clock is synchronized with the frequency input to count over a user-selected sampling time or a user-defined number of frequency input pulses.

Power to the module is supplied from the external power supply. All power for input devices (24V DC) is supplied by the I/O module. Outputs are used to set alarms depending on the input conditions.

The 1794-IJ2 module accepts the following frequency inputs:

- 24V DC IEC1+ proximity switch as defined by standard IEC 1131-2
- 24V DC contact switch with wire off capability
- 500 mV AC magnetic pickup
- 50 mV AC magnetic pickup
- 6V AC vortex
- 3V AC vortex

The 1794-IJ2 module accepts the following gate inputs:

- 24V DC IEC1+ proximity switch as defined by standard IEC 1131-2
- 24V DC contact switch
- 500 mV AC magnetic pickup
- 50 mV AC magnetic pickup

Customer supplied power, ranging from 10...31.2V DC, is connected internally to the power output transistor. When an output is turned on, current flows into the source out of the drain, through the load connected to the ground of the customer supply (customer return). Diode D6 protects the power output transistors from damage due to inductive loads. Output Q1 is a thermally protected FET and will turn off at 3 A (approximately). After an output goes into thermal shutdown, you must fix the cause of the shutdown and toggle the outputs ON and OFF to reenergize the output. RT1 protects D6 and Q1 if power supply polarity is reversed.

The frequency input module isolated power supply consists of 1 isolated 24V DC power supply that provides 2 current limited outputs of 30 mA maximum (1 for each channel).

24V DC Input Frequency Module

Specification	1794-IJ2, 1794-IJ2XT
Processing time	≤ 4 ms
Input frequency, max	1…32 kHz w/sine wave 1…32 kHz w/square wave input
Frequency value, max	32,767 or 3,276.7 (dependent on range)
Input pulse width, min	20 µs
Voltage, on-state input, min	10V (24V IEC+1 proximity, encoder input or switch inputs)
Voltage, on-state input, nom	24V DC
Voltage, on-state input, max	Limited to isolated 24V DC power supply
Current, on-state input, min	2.0 mA
Current, on-state input, nom	9.0 mA
Current, on-state input, max	10.0 mA
Voltage, off-state input, max	5.0V DC on 24V DC IECI + terminal
Current, off-state input, max	1.5 mA into 24V DC IECI + terminal
Wire-off detection	0.4 mA for proximity, encoder, or contact switch with 50 kW shunt resistor
Impedance, frequency input	>5 kΩ for 50 mV extended magnetic pickup >5 kΩ for 500 mV magnetic pickup >10 kΩ for 3V vortex flowmeter >10 kΩ for 6V vortex flowmeter >2.5 kΩ for 24V DC IEC1+ proximity or encoder input >2.5 kΩ for 24V DC contact switch input
Impedance, gate input	>5 kΩ for 50 mV extended magnetic pickup >5 kΩ for 500 mV magnetic pickup >2.5 kΩ for 24V DC IEC1+ proximity or encoder input >2.5 kΩ for 24V DC contact switch input
Output voltage source	Customer supplied
Voltage, on-state output, min	10V DC
Voltage, on-state output, nom	24V DC
Voltage, on-state output, max	31.2V DC
Current, on-state output, min	1.0 mA per output
Current, on-state output, max	1.0 A per channel sourced out of module(1)
Output surge current, max	2 A for 50 ms, repeatable every 2 s
Voltage drop, on-state output, max	0.9V DC @ 1 A
Output control	Outputs individually assignable to: Frequency % Full Scale Acceleration alarm
Output switching time	Triggered by frequency alarm or acceleration alarm Turn On: < 0.5 ms Turn Off: < 1 ms

24V DC Input Frequency Module

Specification	1794-IJ2, 1794-IJ2XT
Dimensions (HxWxD), approx	46 x 94 x 53 mm (1.8 x 3.7 x 3.1 in.) 94 x 94 x 69 mm (3.7 x 3.7 x 2.7 in.) installed
Temperature, operating	**1794-IJ2:** -20…+55 °C (-4…+131 °F) **1794-IJ2XT:** -20…+70 °C (-4…+158 °F)

(1) Current Limited: All outputs can be on simultaneously without derating.

1794-VHSC 2 Channel Very High Speed Counter Module

A counter module has two incremental quadrature encoder interfaces each with three inputs (A, B, and Z). Each input module has ± inputs for connection to pulse transmitters with complementary or non-complementary signals.

The counter can count pulses of one or two pulse trains for up/down counting and detection of a selectable number of edges (X1, X2, X4). Each of the two counters has an upper limit of 1 MHz, a 24-bit counter register, a preset register, and a latch register.

Power to the module is supplied from an external 24V power supply. The 1794-VHSC has two outputs that can be configured for overlapping, multiple windows, and/or pulse-width modulation.

2 Channel Very High Speed Counter Module

Specification	1794-VHSC
Input groups	2 groups of A/A, B/B, and Z/Z pairs with 5V DC or 15…24V DC terminations
Input frequency, max	1.0 MHz counter and encoder X1 (no filters) 500 kHz encoder X2 (no filters) 250 kHz encoder X4 (no filters)
Voltage, on-state input, min	5V DC terminations: >2.6V DC 15…24V DC terminations: >12.5V DC
Voltage, on-state input, max	5V DC terminations: ±6V 15…24V DC terminations: Refer to derating curve
Voltage, off-state input, min	5V DC terminations: ≤ 1.25V DC 15…24V DC terminations: ≤ 1.8V DC
Current, on-state input, min	>5 mA
Current, on-state input, max	≤ 0.250 mA
Input filter selections	5: Off, 10 µs, 100 µs, 1.0 ms, 10.0 ms per A/B/Z group
Output control	Outputs can be tied to 8 compare windows
Output supply voltage range	5…7V DC or 10…31V DC
Leakage current, off-state output, max	≤ 0.3 mA
Voltage drop, on-state output, max	5V operation – 0.5 A 12…24V operation – 1.0 A

2 Channel Very High Speed Counter Module

Specification	1794-VHSC
Current, on-state output, max	5V operation – 0.5 A 12…24V operation – 1.0 A
Current per output pair, max	5V operation – 0.9 A 12…24V operation – 4.0 A
Short circuit current	5V operation – 0.9V DC @ 0.5 A(1) 12…24V operation – 0.9V DC @ 1.0 A
Output delay time, OFF to ON	25 µs (load dependent)
Output delay time, ON to OFF	150 µs (load dependent)
Dimensions (HxWxD), approx	46 x 94 x 53 mm (1.8 x 3.7 x 3.1 in.) 94 x 94 x 69 mm (3.7 x 3.7 x 2.7 in.) installed
Temperature, operating	0…55 °C (32…131 °F)

(1) Outputs are short circuit protected and turned off until power is cycled.

1794-VHSC Derating Curve

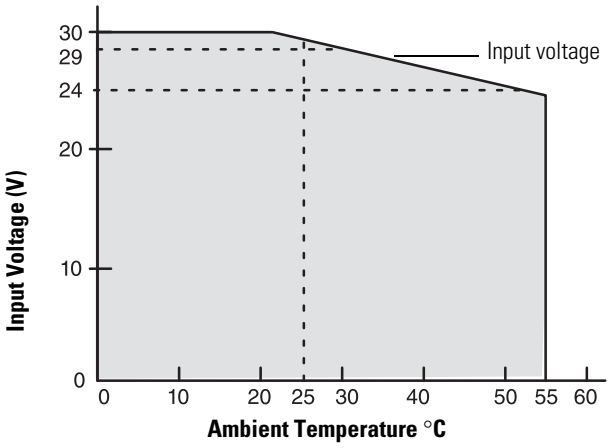

The area within the curve represents the safe operating range for the module under various conditions of user supplied 24V DC supply voltages and ambient temperatures. This includes all possible mounting positions, including inverted horizontal.

= Safe operating area

1794-ID2 2 Input Pulse Counter Module

The 1794-ID2 module is a 2-channel counter used in applications where pulse counting is required. Typical input devices include quadrature incremental encoders with or without reference and/or gate function and pulse transmitters. You can use one or two pulse trains.

2 Input Pulse Counter Module

Specification	1794-ID2
Input pulse width	Each signal condition must be stable for at least 2 ms to be recognized
Input groups	2 groups of A, B, Z, G inputs
Counting frequency, max	100 kHz
Cable type	Input: Belden 8761
Wire category	2(1)
Conductor length, max	304.8 m (1000 ft)
Input signal range	3 mA @ 6V DC 9 mA @ 12V DC 15 mA @ 24V DC
Dimensions (WxHxD), approx	46 x 94 x 53 mm (1.8 x 3.7 x 3.1 in.) 94 x 94 x 69 mm (3.7 x 3.7 x 2.7 in.) installed
Temperature, operating	0…55 °C (32…131 °F)

(1) Use this Conductor Category information for planning conductor routing. Refer to Industrial Automation Wiring and Grounding Guidelines, publication 1770-4.1.

1794-IP4 4 Input Pulse Counter Module

The pulse counter modules perform high-speed scaling, calculation operations for various industrial applications. Some sample applications include:

- quantity counting
- speed calculation
- flow monitoring

All the input devices for the pulse counter module should be able to provide the input signal of 6V amplitude. The 1794-IP4 has a 6V minimum threshold for an input ON condition and a maximum 3V threshold for an input OFF condition. The region between 3V and 6V is a transitional one and therefore requires input signals to pass cleanly through that region.

4 Input Pulse Counter Module

Specification	1794-IP4
Counting frequency, max	100 kHz(1)
Input frequency, max	100
Input signal range	3 mA @ 6V DC 9 mA @ 12V DC 15 mA @ 24V DC
Overflow	Maximum period – 65 ms when 1 MHz internal clock selected Maximum period – 6.5 ms when 10 MHz internal clock selected
Dimensions (WxHxD), approx	46 x 94 x 53 mm (1.8 x 3.7 x 3.1 in.) 94 x 94 x 69 mm (3.7 x 3.7 x 2.7 in.) installed
Temperature, operating	0…55 °C (32…131 °F)

(1) Each signal condition must be stable for at least 2 ms to be recognized.

Select a FLEX I/O Terminal Base Unit

Step 3 – Select:

the appropriate terminal base unit for your module and system

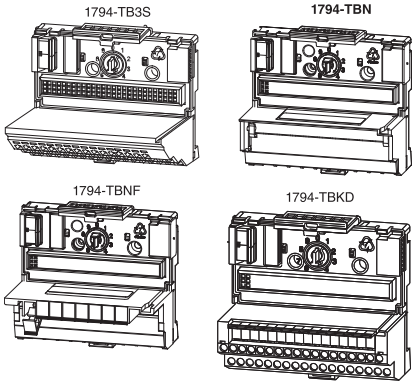

Each FLEX I/O module requires a terminal base unit that snaps onto the DIN rail to the right of the I/O adapter. The terminal bases provide terminal connection points for the I/O wiring and plug together to form the backplane. They are available with screw, clamp, or spring terminations.

Common Terminal Base Characteristics

Current Capacity, max	Wire Size	Dimensions (HxWxD)
10	0.34…3.3 mm^2 (22…12 AWG) solid or stranded copper wire rated at 75 °C (167 °F) or greater, 1.2 mm (3/64 in.) insulation max	94 x 94 x 69 mm 3.7 x 3.7 x 2.7 in. **1794-TB37DS and 1794-TB62DS*** (1) 127 x 94 x 69 mm 5.0 x 3.7 x 2.7 in

(1) Measured with expansion module installed.

The following table is a comparison of general specifications for each FLEX I/O terminal base unit. For compatibility with FLEX I/O modules, see Table Digital I/O Module Summary on page 24.

General Specification Comparison

Catalog(1)	Termination Type	Connections	Used in Applications	Current Capacity, max	Wiring Category	Purpose	Temperature, operating
1794-TB2	Cage clamp	16 I/O; 18 common; 2 +V	Up to 132V AC/156V DC	10	2	A generic 2-wire version of the 1794-TB3.	-20…+55 °C (-4…+131 °F)
1794-TB3, 1794-TB3K(2)		16 I/O; 18 common; 18 +V			Module dependent	Primarily intended for use with input modules when using 3-wire input proximity switches – can also be used with output modules.	-20…+70 °C (-4…+158 °F)
1794-TB3S, 1794-TB3SK	Spring clamp					A spring clamp version of the 1794-TB3 – provides faster, simpler wire installation.	
1794-TB32	Cage clamp	32 I/O; 8 common; 8 +V	Up to 31.2V DC			A 32-point version of the 1794-TB3 to be used with 32-point digital modules and the 1794-IB16D module.	
1794-TB32S	Spring clamp					A spring clamp version of the 1794-TB32.	
1794-TB3G, 1794-TB3GK(2)	Grounded screw clamp	36 I/O; 2 common; 2 +V; 10 chassis ground				A screw clamp terminal base unit with individual grounding used with certain analog modules.	
1794-TB3GS, 1794-TB3GSK(2)	Grounded spring clamp				2	A spring clamp version of the 1794-TB3G.	

General Specification Comparison

Catalog[1]	Termination Type	Connections	Used in Applications	Current Capacity, max	Wiring Category	Purpose	Temperature, operating
1794-TB3T, 1794-TB3TK	Cage clamp, temperature	16 I/O; 10 common; 4 +V; 8 chassis ground; 2 sets of CJC for temperature modules	Up to 132V AC/156V DC	10	Module dependent	A cage clamp terminal base to be used with the 1794-IT8 or 1794-IRT8 module (when used in thermocouple mode) – also provides chassis ground connections for the 1794-IR8 and analog modules.	-20…+70 °C (-4…+158 °F)
1794-TB3GT	Cage clamp, grounded			V/COM terminals: 10 A I/O terminals: 2 A			
1794-TB3TS, 1794-TB3TSK[2]	Spring clamp, temperature	16 I/O; 10 common; 4 +V; 8 chassis ground; 2 sets of CJC for temperature modules	Up to 132V AC/156V DC	10	2	A spring clamp version of the 1794-TB3T.	-20…+70 °C (-4…+158 °F)
1794-TBKD[3]	Cage clamp, knife disconnect	16 I/O; 18 common; 2 +V	—		Module dependent	A cage clamp terminal base with 16 knife disconnects.	0…55 °C (32…131 °F)
1794-TBN, 1794-TBNK[2]	Screw clamp, NEMA-style	16 I/O; 2 common; 2 +V	264V AC/DC			A NEMA-style screw clamp terminal base for larger gauge wires with a cover for I/O wiring.	-20…+70 °C (-4…+158 °F)
1794-TBNF	Screw clamp, fused NEMA-style					Provides eight 5 x 20 mm fused, screw terminals with a cover for I/O wiring – shipped with fuses for the 1794-OA8 module; can be used to fuse the 1794-OM8 and 1794-OW8 modules with a replacement fuse.[4]	-20…+55 °C (-4…+131 °F)
1794-TB37DS	D-shell	37 Pin; digital and analog	—		Module dependent	A 37-pin D-shell termination for both digital and analog modules.	0…55 °C (32…131 °F)
1794-TB62DS		62 Point;				A 62-pin D-shell termination for both digital and analog modules.	

(1) Isolation voltage, channel to channel, is determined by the insert module. Use this conductor category information for planning conductor routing. Refer to Industrial Automation Wiring and Grounding Guidelines, publication 1770-4.1.

(2) The letter K in the last position of the catalog number, before the series designation, indicates a conformal coated versions of standard modules and can be used with extended temperature modules (modules ending in -XT).

(3) Discontinued catalogs may not have updated specifications. For more information about a specific discontinued catalog, refer to individual installation instructions.

(4) Contains eight 5 x 20 mm fuses (one for each even-numbered terminal – 0…14 on row B). Shipped with 1.6 A, 250V AC Slow Blow fuse suitable for the 1794-OA8 AC output module. Refer to individual installation instructions for fusing recommendations for other modules. Littlefuse PN23901.6 A-B PN94171304, SAN-O PNSD6-1.6A.

Select a FLEX I/O Power Supply

Step 4 – Select:

if power consumption exceeds the maximum for a single power supply, install additional power supplies

FLEX I/O modules are interfaced to the I/O link through a FLEX I/O adapter module with a built-in 24V DC input power supply. The FLEX I/O modules receive power from the adapter/power supply through the backplane. The 120V AC to 24V DC power supply (1794-PS13 or 1794-PS3) is also available for powering the adapter/power supply.

General Specification Comparison

Catalog	Power Supply Input Voltage, nom	Power Supply Input Power	Apparent Input Power, max	Transformer Load, max	Output Current, max	Output Voltage, nom	Dimensions (HxWxD), approx
1794-PS3	120V/220V AC	86 W	205 VA	250 VA	3.0 A	24V DC	87 x 94 x 69 mm (3.4 x 3.7 x 2.7 in.)
1794-PS13		36 W	53 VA	90 VA	1.3 A		87 x 69 x 69 mm (3.4 x 2.7 x 2.7 in.)

Power Supply Definitions

Module Supply Voltage — This is typically either 120V AC or 24V DC nominal voltage that is supplied from an external power source wired to the module terminal base unit.

All Flex I/O adapters provide internal power to the maximum possible number of 8 Flex I/O modules. Power supply modules are required to provide 24V to the adapters.

The 1794-PS13 power supply is capable of supplying a maximum of 1.3 A at 24V DC. The output surge current is sufficient to drive four adapters with a surge of 23 A for 2 ms each operating at 24V DC.

The 1794-PS3 power supply is capable of supplying a maximum of 3 A(1) at 24V DC. The output surge current is sufficient to drive six adapters with a surge of 23 A for 2 ms each operating at 24V DC.

Non-Allen-Bradley DC power supplies can also be used, but should operate within the specifications for the devices they are powering. Size the power supply by calculating the total current consumed by summing the currents for each of the modules used for the power supply operating voltage applied.

(1) This refers to horizontal mounting: 2.8 A maximum for all other mountings. Refer to the derating curve in the installation instructions for that module.

The 1606 switched mode power supplies are capable of supplying a maximum of up to 40 A at 24V DC and can be used as an alternative when more power is needed.

Digital Input Modules require supplied 24V DC (19.2...31.2V DC) and consume the currents listed in the module specifications.

Digital Output Modules require supplied 24V DC (19.2...31.2V DC) and consume the currents listed in the module specifications plus the total current consumed by their loads. The load current is limited by the maximum load current and surge listed.

Combination Digital Modules have a combination of inputs and outputs. The current load should be determined as described for the combined input and output specifications listed.

Analog Input Modules require supplied 24V DC (19.2...31.2V DC) and consume the currents listed in the module specifications. In addition, adequate power must be supplied to the 1794-IE8 and 1794-IF4I transmitters to deliver input terminal voltage or drive 20 mA into the input impedance listed. This power source may be the same as the module power and can be included in the power supply calculated.

Analog Output Modules require supplied 24V DC (19.2...31.2V DC) and consume the currents listed plus the total current consumed by their loads. The load current is limited by maximum current or resistive load permitted per channel.

Combination Analog Modules have a combination of analog inputs and outputs. The current load should be determined as described previously for the combined modules and output specifications listed. The output load current is limited by the maximum current or resistive load permitted per channel. In addition, adequate power must be supplied to the 1794-IE8 and 1794-IF4I transmitters to deliver input terminal voltage or drive 20 mA into the input impedance listed. This power source may be the same as the module power and can be included in the power supply calculation.

Counter Modules require module power, transmitter input power, and in some cases output load power. If output load power is required, use a separate power supply for output load power for noise immunity.

Power Requirements and Transformer Sizing

- Use the real power value in watts for determining the amount of heat dissipation you will have inside the enclosure.
- Use the apparent power value in VA for estimated power distribution sizing.
- Use the transformer load value in VA of each power supply plus all other loads on a transformer to determine the required transformer size.

1794-PS3 AC/DC

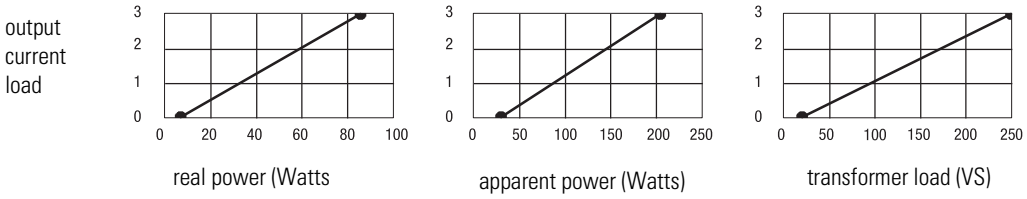

1794-PS13 AC/DC

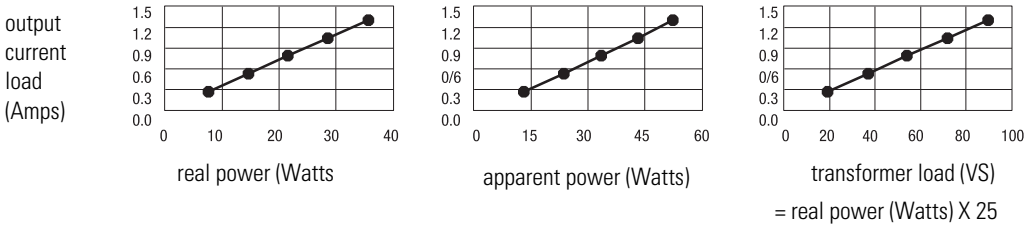

Notes:

About the FLEX Ex I/O Systems

1797 FLEX Ex I/O Overview

FLEX Ex™ I/O offers:

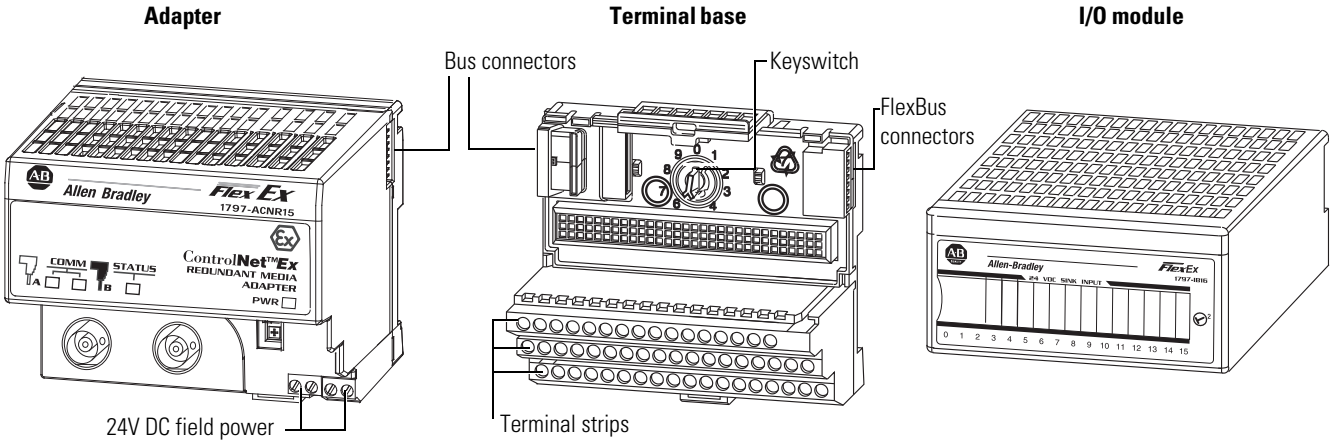

FLEX Ex I/O leverages advanced technologies allowing the application to move to a distributed architecture in the hazardous area. We have taken our experience gained with the standard FLEX I/O system and used it to create an intrinsically safe system with the same look, feel, and ease of use.

Mounts without purged or explosion-proof enclosures in the hazardous area. FLEX Ex I/O is a modular I/O system that eliminates the need for Intrinsic Safety (IS) barriers/isolators or long wiring runs to the control cabinet.

One adapter communicates with up to eight I/O modules. Allows connection to:

- 128 digital inputs/outputs, or
- 64 analog inputs, or
- mix to meet your needs.

Redundant media ControlNet adapter communicates with up to eight I/O modules and can be mounted in the hazardous area.

Adjust the keyswitch to prevent incorrect module insertion into a preconfigured terminal base.

Exchange terminal bases without moving other bases in your system.

Connect FLEX Ex power supplies to the terminal base that provides power to the I/O modules and field devices. No additional power supplies are needed.

Plug the I/O module into the terminal base. Use the module to connect to the I/O bus and field devices.

Remove and insert modules under power. No direct wiring to the module enables you to change modules without disturbing field wiring or system power.

Mix and match I/O modules. Wide variety of digital, analog, temperature, frequency, and HART modules.

FlexBus Isolator allows connection to standard FLEX I/O adapters and I/O thus providing a choice of other networks.

Conformal coating on all modules meets the noxious gas requirement of ISAS71.04-1985 severity level G3 for hydrogen sulfide, sulfur dioxide, chlorine, nitrogen dioxide, hydrogen fluoride, ammonia, and ozone.

FLEX Ex combines a terminal strip and intrinsic-safety isolation with an I/O interface. Use the terminal strip on the terminal base to wire your field devices directly. The FLEX Ex design also offers these features:

- modularity for distributed IS systems
- all of the features of a larger, rack-based system
- installation near the field devices to reduce wiring costs and complexity
- terminations for field wiring eliminating the need for marshalling or extra terminal strips
- ControlNet-based networking solution in the hazardous area with ControlNet Ex products
- DIN-rail mounting

FLEX Ex provides additional value if system problems develop. The terminal base lets you remove and insert I/O modules under power without rewiring or disrupting your system. Combining your field-wiring terminations, IS isolation, and the I/O interface into the same location saves you time, money, and makes your system easier to maintain and troubleshoot. Additional benefits include:

- galvanic isolation between the I/O backplane, input circuitry, and power supply
- dual-fault protection IS circuits provide the highest fault tolerance
- I/O circuitry provides full IS field-device protection
- the modules themselves are IS protected for installation in hazardous environments

FLEX Ex I/O modules may be removed and inserted while operating under power. Network module maintenance and cable connections can be made in the hazardous area while the system is in operation and the area is hazardous.

FLEX Ex Typical Configurations

The following are typical configurations of FLEX Ex I/O in an intrinsically safe system:

- FLEX Ex I/O modules are interfaced through a ControlNet Ex I/O adapter module to a coax ControlNet segment that is confined to the hazardous area. This coax ControlNet Ex segment is interfaced through a ControlNet Ex coax drop repeater module and ControlNet Ex fiber media port adapter to a fiber-optic ControlNet segment, which is fed through from the safe area. A FLEX Ex power supply powers the repeater module, fiber media port adapter, ControlNet Ex I/O adapter module, and I/O modules individually. This configuration is best for long distances and a large number of nodes.
- The FLEX Ex ControlNet barrier allows connection to a ControlNet Ex I/O adapter module in the hazardous area via coax directly from the safe area. The barrier is mounted in the safe area. This is more economical for intermediate distances and nodes.
- Sensors and actuators in a hazardous area can be connected to FLEX Ex I/O modules, which are connected through a bus isolator module and connector to a FLEX I/O adapter in a safe area thus allowing connectivity to DeviceNet, ControlNet, Universal Remote I/O, and EtherNet/IP. This configuration may be most economical for low-point applications or when networks other than ControlNet are required.
- FLEX Ex I/O modules in a hazardous area can be connected through an extender cable to a FlexBus feed-through connector in an explosion-proof enclosure. Inside the enclosure, the feed-through connector is connected through a FLEX Ex extender cable, and then a bus isolator module and connector, to a FLEX I/O adapter.

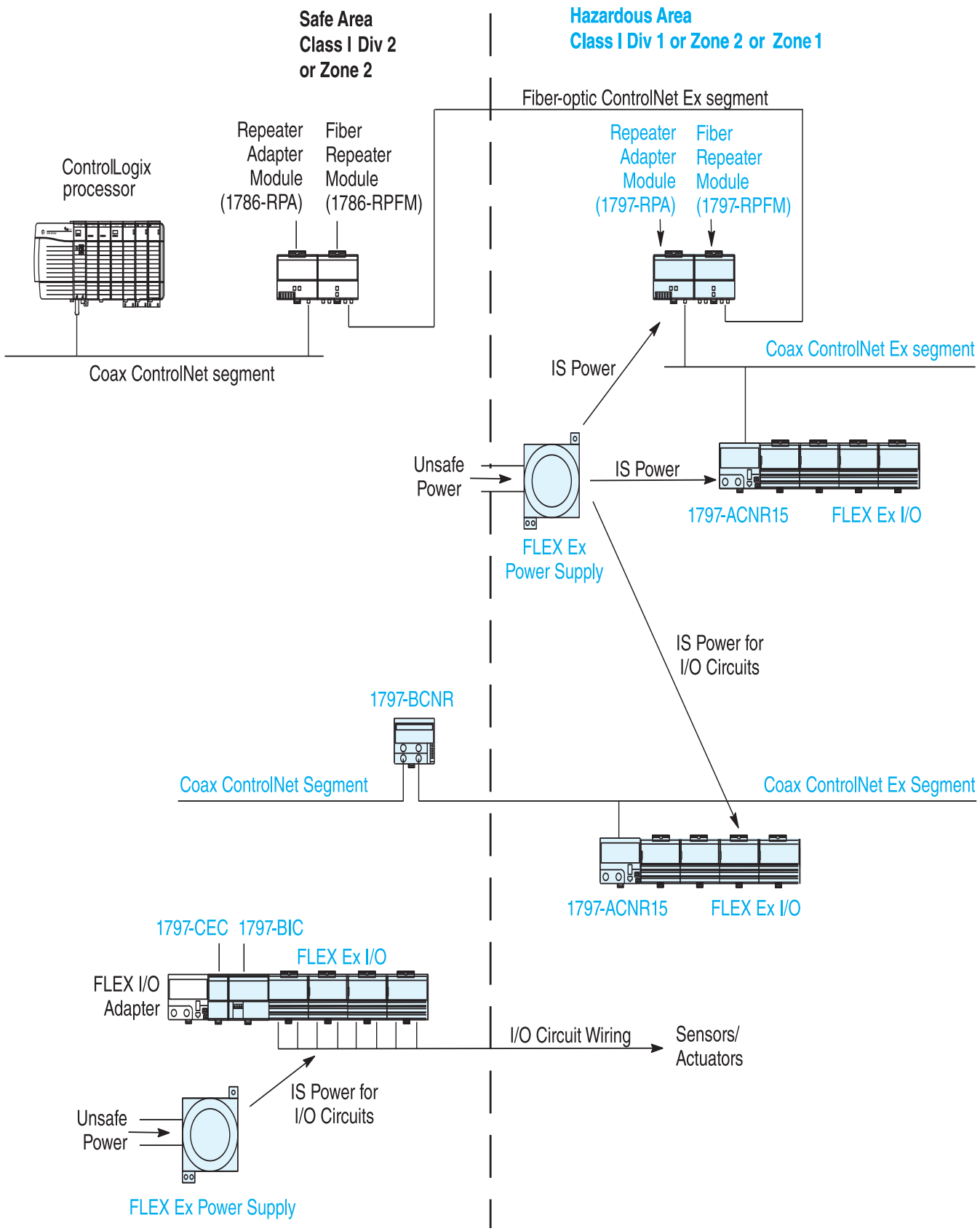
Safe Area
Class I Div 2
or Zone 2
Hazardous Area
Class I Div 1 or Zone 2 or Zone 1
Fiber-optic ControlNet Ex segment
ControlLogix processor
Repeater Adapter Module (1786-RPA)
Fiber Repeater Module (1786-RPFM)
Repeater Adapter Module (1797-RPA)
Fiber Repeater Module (1797-RPFM)
Coax ControlNet segment
Coax ControlNet Ex segment
IS Power
Unsafe Power
IS Power
1797-ACNR15
FLEX Ex I/O
FLEX Ex Power Supply
IS Power for I/O Circuits
1797-BCNR
Coax ControlNet Segment
Coax ControlNet Ex Segment
1797-ACNR15
FLEX Ex I/O
1797-CEC
1797-BIC
FLEX Ex I/O
FLEX I/O Adapter
I/O Circuit Wiring
Sensors/ Actuators
Unsafe Power
IS Power for I/O Circuits
FLEX Ex Power Supply

Entity-Based Architecture

Entity parameters provide a system of quantifying and matching safe levels for voltage, current, inductance, and capacitance when connecting intrinsically safe field devices and system devices together.

Configuration of the FLEX Ex system is based on the entity parameter method. Using entity parameters allows high system flexibility in matching field and system devices. This provides maximum utility to the IS system designer and installer. For more information, refer to the FLEX Ex System Certification Reference Manual, publication 1797-RM001.

Hazardous Area Designation

A hazardous area is designated as any location in which a combustible material is or may be present in the atmosphere in sufficient concentration to produce an ignitable mixture.

The North American method identifies these areas by Class, Division, and Group while the IEC (CENELEC) designates these areas by Zone and Gas Group.

Recently, North America has adopted the Zone method of identifying hazardous locations as an option to the Division method.

Class Designation

Class identifies the type of hazardous atmosphere.

Class I	Gas or vapor
Class II	Dust
Class III	Fiber or flying (no group designation)

Division/Zone Designations

Division/Zone identifies the likelihood of a hazardous atmosphere being present.

	Division Method (North America)	**IEC Standard Zone Method**
Ignitable mixture present continuously (long periods)	Division 1	Zone 0 (Zone 20 - Dust)
Ignitable mixture present intermittently		Zone 1 (Zone 21 - Dust)
Ignitable mixture is not normally present	Division 2	Zone 2 (Zone 22 - Dust)

Gas/Dust Groups

Hazardous locations are grouped according to their ignition properties.

Typical Gas	North American Gas Group	IEC Gas Group
Acetylene	A	IIC
Hydrogen	B	
Ethylene	C	IIB
Propane	D	IIA
Methane(1)	D	I
Metal dust	E	—
Coal dust	F	
Grain dust	G	

(1) Mining applications under jurisdiction of MSHA.

Use in North American Hazardous Locations

FLEX Ex modules are rated for installation in Class I Division 1 & 2, Groups A-D hazardous areas. They are also rated to connect to field devices that are located in Class I, II, or III, Groups A-G hazardous areas.

If FLEX Ex components are to be installed in a Class II or III location in your application, you must mount them in a suitable, dust-proof enclosure with the appropriate connectors, glans, and seals. For example, a NEMA 9 enclosure may be appropriate. The FLEX Ex modules are rated to connect to devices located in Class II or III locations.

FLEX Ex modules are rated for installation in North American Class I Zone 1 & 2, Groups IIC, IIB, & IIA hazardous areas. They are also rated to connect to field devices that are located in North American Class I Zone 0, 1, & 2, Groups IIC, IIB, & IIA hazardous areas.

As always, observe local code requirements when applying your FLEX Ex application. For more information, refer to the FLEX Ex System Certification Reference Manual, publication 1797-RM001.

Use in ATEX Hazardous Locations

FLEX Ex modules are rated for installation in European Zones 1, 2 and 22. They are also rated to connect to field devices that are located in European Zones 0, 1, 2, 21 and 22 hazardous areas. The FLEX Ex power supplies (1797-PS1E and -PS2E2) are rated for use in Zone 1 and 22.

If FLEX Ex components are to be installed in a European Zone method dust or fiber location in your application, you must mount them in an approved, dust-proof enclosure with the appropriate connectors, glans, and seals. Pepperl+Fuchs have three cabinets that are approved for use with FLEX Ex components in Zone 22 applications: IVK2-ISRPI-V8LC; IVK2-ISRPI-V8HYW; and IVK2-ISRPI-V16LC. P+F has offices in Twinsburg, Ohio, USA, and Mannheim, Germany. See their website at www.pepperl-fuchs.com.

As always, observe local code requirements when applying your FLEX Ex application. For more information and full certification, refer to the FLEX Ex System Certification Reference Manual, publication 1797-RM001.

Specify a FLEX Ex System

Follow these steps as you specify your FLEX Ex I/O system:

?	Step	See	Page
	1 Select an adapter and distribution method Choose an adapter and fiber hub or coax barrier to distribute FLEX Ex into the hazardous area. Or, choose a bus isolator pair to connect to various networks.	Select FLEX Ex I/O Communication Adapters and Distribution Method	89
		1797-RPFM ControlNet Ex 3 km Fiber Media Port Adapter	92
		1797-BCNR Coax Barrier Module	92
		1797-BIC Bus Isolator Module and 1797-CEC FlexBus Connector	94
	2 Determine the I/O devices • location of the device • number of points needed • appropriate catalog number • number of points available per module • number of modules	Digital I/O Modules	97
		Analog Modules	101
		HART Interface Modules	105
		Counter I/O Module	108
	3 Select a terminal base Choose an appropriate terminal base for your modules.	Terminal Base Wiring Diagrams	111
	4 Select power supplies • Choose appropriate power supply • Ensure sufficient power for the communication adapter and modules	Select a FLEX Ex I/O Power Supply	113
		Understanding System Planning	114
		Assigning Power Supplies	116
		Hazardous Area Installation	117
		General Specification Comparison	113
	5 Select optional accessories • Determine whether to panel mount or DIN rail mount the FLEX I/O system and at what orientation (horizontal or vertical) • Choose appropriate optional accessories to enhance your system	Mount the FLEX System	121
		1794-CE1 and 1794-CE3 Extender Cables	123
		1797-BOOT ControlNet BNC Boot	125
		1797-INS Trunk Insulator and 1797-EXMK Marking Kit	125
		ControlNet Ex Taps	126

Notes:

Select FLEX Ex I/O Communication Adapters and Distribution Method

Step 1 – Select:

the communication adapter for the ControlNet Ex network the coax barrier to distribute into hazardous areas

The diagnostic capabilities and determinism of the ControlNet network make it an ideal choice for distributing I/O into hazardous area applications.

The redundant media ControlNet Ex communications adapter (1797-ACNR15) is high speed and capable of communicating with as many as 8 I/O modules for up to 128 I/O points.

The ControlNet Ex segment in the hazardous area must be protected from other ControlNet segments in safe areas. Isolation can be achieved via two approaches: by converting coax to fiber with a pair of fiber hubs/repeaters or by using a coax barrier.

The combination of a ControlNet fiber hub (1786-RPA and -RPFM) and a ControlNet Ex fiber hub (1797-RPA and 1797-RPFM) allows for flawless, high-speed, deterministic data flow and messaging between hazardous and safe areas. This combination functions as an intrinsically safe isolator between hazardous and safe areas and can provide long-distance communication up to three kilometers. It is best for longer distance and largest number of adapters and I/O points.

An intrinsically safe network and I/O system installed in the hazardous area allows your data to be gathered at its origin and transported out of the area with minimum amount of wiring. Cable penetrations into the hazardous area, cable trays, and conduit are all drastically reduced.:

Network Comparison by Application Requirement

Catalog Number.	Description	Agency Certification	Intrinsically Safe Output Characteristics	Intrinsically Safe Power Supply (V, -V)	See page:
1797-ACRN15	Redundant media ControlNet Ex adapter	Class I Division 1 Groups A…D T4 Class I Zone 1 AEx ib IIC T4	16 position male/female FlexBus connector: $U_0 \leq 5.4$V DC $I_0 \leq 400$ mA $P_0 \leq 2.16$ W $L_0 \leq 10$ µH $C_0 \leq 65$ µF	$U_i \leq 9.5$V DC $I_i \leq 1$ A $P_i \leq 9.5$ W L_i = Negligible $C_i \leq 120$ nF	91

Network Comparison by Application Requirement

Catalog Number.	Description	Agency Certification	Intrinsically Safe Output Characteristics	Intrinsically Safe Power Supply (V, -V)	See page:
1797-RPA	ControlNet Ex modular repeater adapter	Class I Division 1 Groups A…D T4 Class I Zone 1 AEx ib IIC T4 Class II Division 1 Groups E, F, G; Class III(1)	30 pin male TTL bus connector $U_0 \leq 5.4V$ DC $I_0 \leq 201mA$ $P_0 \leq 1.09$ W $L_0 \leq 0.45$ µH $C_0 \leq 71$µF	$U_i \leq 9.5V$ DC $I_i \leq 1A$ $P_i \leq 9.5$ W L_i = Negligible $C_i \leq 120$ nF	91
1797-RPFM	ControlNet Ex fiber repeater module, medium distance	Class I Division 1 Groups A-D T4 Class I Zone 1 AEx ib [ia] IIC T4 Class II Division 1 Groups E, F, G; Class III(1)	30 pin male TTL bus connector $U_0 \leq 5.4V$ $I_0 \leq 201$ mA $P_0 \leq 1.1$ W $L_0 \leq 0.45$ mH $C_0 \leq 71$ µF	—	92
1797-BCNR	Redundant ControLnet galvanic isolation barrier module	II (2) G [EEx ib] IIC	Open circuit voltage U_0 = 7V, max I_0 = 14 mA (at the resonant frequency of 66kHz)	—	92
1797-BIC	Bus isolator module	Nonincendive, use for Class I, Division 2 Groups A…D or Class I, Zone 2 Group IIC Provides intrinsically safe outputs to Class I, Division 1 Groups A…D or Class I, Zone 1 Group IIC	$V_t \leq$ 5.75V DC $I_t \leq$ 3.98.25 mA $C_a \leq$ 39.67 µF $L_a \leq$ 210 µH	—	94
1797-CEC	FlexBus connector module	Nonincendive, use for Class I, Division 2 Groups A…D or Class I, Zone 2 Group IIC	—	—	94

(1) For Class II Division 1 Groups E, F, G and Class III, modules must be installed in a UL listed Type 4, 4X, 6, 6P, 9, 12, or 12K enclosure.

Figure 1 - Distribution Between Areas

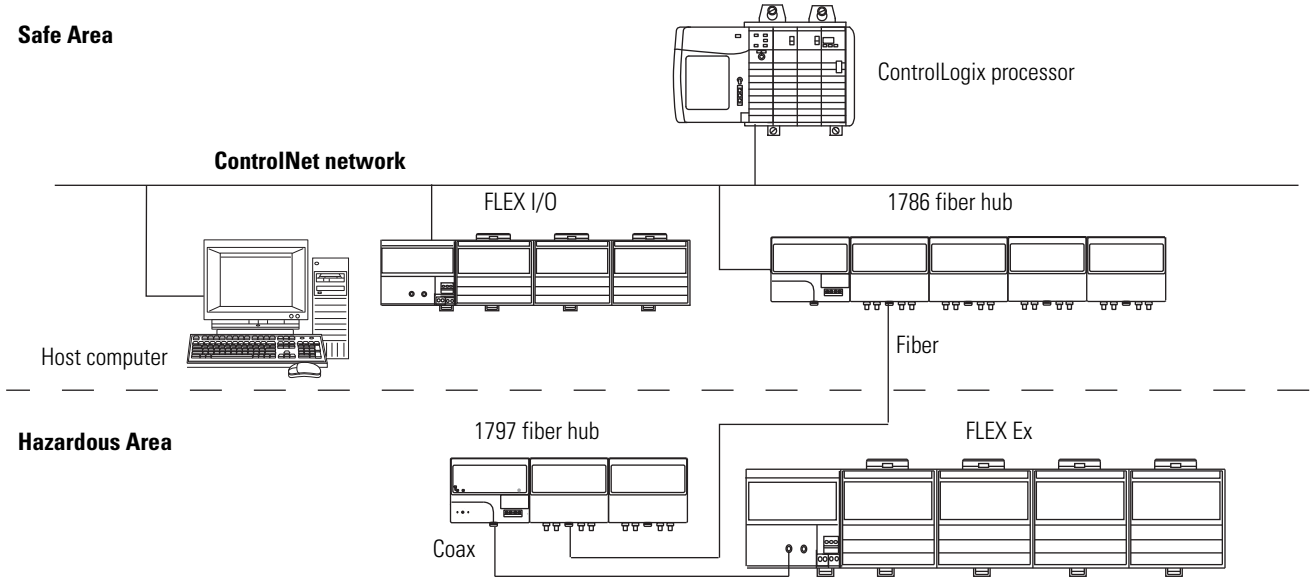

1797-ACNR15 Dual Media ControlNet Ex 1.5 Adapter

The 1797-ACNR15 interfaces FLEX Ex I/O modules to a coax segment of a ControlNet Ex I/O link. It provides power to the backplane to run bus interface circuitry aboard I/O modules and is capable of dual ControlNet Ex cable media.

FLEX I/O EtherNet/IP Adapter Specifications

Attribute	1797-ACNR15
I/O module capacity	8
Temperature, operating	-20…+70°C (-4 …+158°F)
Communication interface	Quad-shield RG-6 coax
Communication rate	5 Mbps
Noxious gas exposure	Tested to severity level G3, ISA-S71.04-1985
Dimensions (HxWxD), approx	94 x 94 x 91 mm (3.7 x 3.7 x 3.58 in.)
Weight, approx.	0.2 kg (0.44 lbs)
Thermal dissipation	29 BTU/hr

1797-RPA ControlNet Ex Coax Drop Repeater Module

The 1797-RPA functions as part of the fiber repeater hub within the hazardous area to extend the length of the ControlNet Ex segments to interlink systems all operating within the area. It functions as the intelligent starter block for a multiport repeater and is configured with at least one media adapter.

FLEX I/O ControlNet Adapter Specifications

Attribute	1797-RPA
Fiber media port adapter capacity	2
Temperature, operating	-20…+70°C (-4 …+158°F)
ControlNet cable	Quad-shield RG-6 coax
Communication rate	5 Mbps
Noxious gas exposure	Tested to severity level G3, ISA-S71.04-1985
Power dissipation	8.5 W
Dimensions (HxWxD), approx	46 x 94 x 75 mm (1.8 x 3.7 x 2.95 in.) 94 x 94 x 91 mm (3.7 x 3.7 x 3.6 in.) installed
Weight, approx.	0.2 kg (0.44 lbs)
Thermal dissipation	29 BTU/hr

1797-RPFM ControlNet Ex 3 km Fiber Media Port Adapter

The 1797-RPFM (part of the fiber repeater hub) functions as a non-intelligent fiber to backplane conversion device and converts glass fiber infrared LED media signals to backplane signals for use by the 1797-RPA repeater module.

FLEX I/O DeviceNet Adapter Specifications

Attribute	1797-RPFM
Communication interface	Fiber optic cable
Fiber type	62.5/125 mm
Fiber termination type	ST (plastic or ceramic)
Communication rate	5 Mbps
Noxious gas exposure	Tested to severity level G3, ISA-S71.04-1985
Power dissipation	Included in 1797-RPA
Dimensions (HxWxD), approx	94 x 94 x 91 mm (3.7 x 3.7 x 3.58 in.)
Weight, approx.	0.1 kg (0.22 lbs)
Thermal dissipation	Included in 1797-RPA

1797-BCNR Coax Barrier Module

The redundant media ControlNet coax barrier (1797-BCNR) isolates the ControlNet segment in the safe area from that in the hazardous area. It allows connection into the hazardous area without converting to/from fiber media. The barrier can support up to 20 adapters and distances up to 500 meters. Thus, it addresses intermediate size applications in a highly cost-effective manner. The barrier can be mounted in safe, Division 2 or Zone 2 areas.

When using a 1797-BCNR, the total allowable length of a segment containing standard RG-6 quad-shield cable depends on the number of taps in your segment. There is no minimum trunk-cable section length requirement. The maximum allowable length of a segment that contains a 1797-BCNR is 500 m (1640 ft) with two taps connected. Each additional tap decreases the maximum length of the segment according to the chart. The maximum number of taps allowed on a segment is 20 with a maximum length of 250 m (820 ft).

FLEX I/O Remote I/O Adapter Specifications

Attribute	1797-BCNR
Temperature, operating	-20…+70°C (-4 …+158°F)
ControlNet Ex system characteristics	U_o = 7V I_o = 55 mA @ 52 KHz P_o = negligible
Non Ex ControlNet characteristics	U_n = 5V U_m = 253V AC I = not defined P = not defined
ControlNet communication rate	5 Mbps
Transmission attenuation	-7.84 dB
Noxious Gas exposure	—
Dimensions (HxWxD), approx.	70 x 100 x 90 mm (2.76 x 3.94 x 3.55 in.)
Weight, approx.	0.2 kg (0.44 lbs)

1797-BIC Bus Isolator Module and 1797-CEC FlexBus Connector

The bus isolator modules, 1797-BIC and -CEC, allow you to configure FLEX Ex modules and FLEX I/O modules on the DIN Rail when attached to the same adapter and grouped together on appropriate sides of the bus isolator module. This highly flexible, cost-effective solution combines intrinsically safe and non-intrinsically safe systems.

Intermixed system can be configured for use in the:

- safe area much like traditional IS and I/O systems
- hazardous and safe control equipment where the distance of physical separation is short
- FLEX Ex I/O with communication adapters that are not intrinsically safe

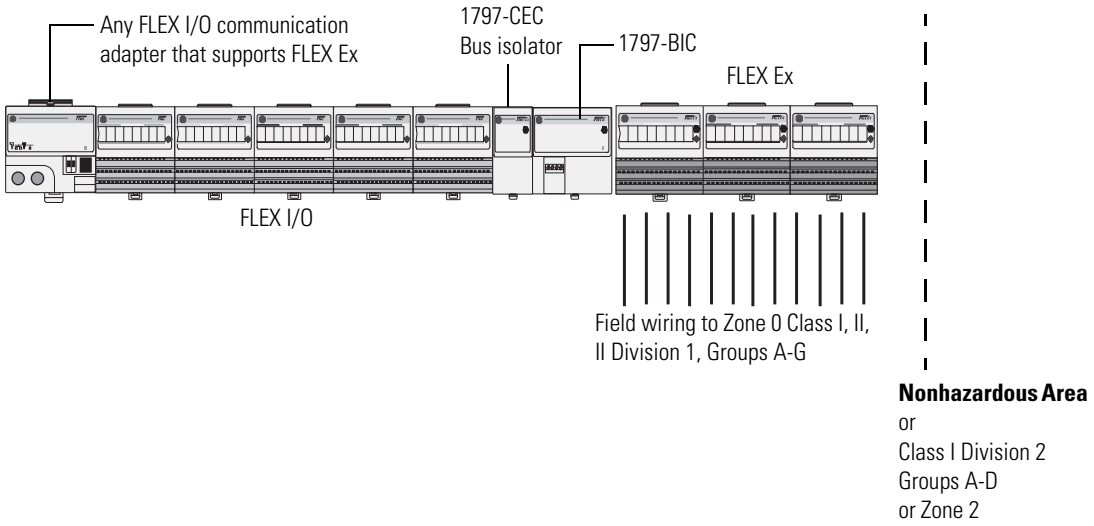

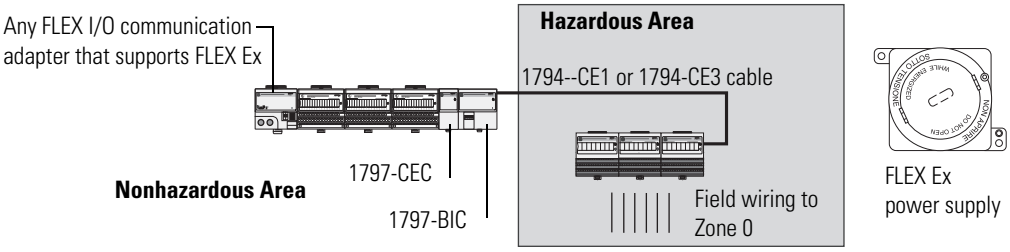

The 1797-BIC and -CEC modules provide an IS-compatible mechanism to separate two sections of the backplane, allowing IS and non-IS field-device wiring to the same I/O group. It converts hazardous power to IS-safe power to run one side of the bus receiver/transmitter circuitry and IS-safe power to slave side modules. A total of eight I/O modules (1794 FLEX I/O or 1797 FLEX Ex I/O) may be attached to the adapter.

When combining 1794 FLEX I/O and 1797 FLEX Ex I/O, the 1794 FLEX I/O modules are placed to the left of the 1797-BIC and -CEC modules while the 1797 FLEX Ex I/O modules are placed on the right.

IMPORTANT A FLEX Ex power supply (1797-PSxxx) must be used to power the 1797 FLEX Ex I/O regardless of where they are located.

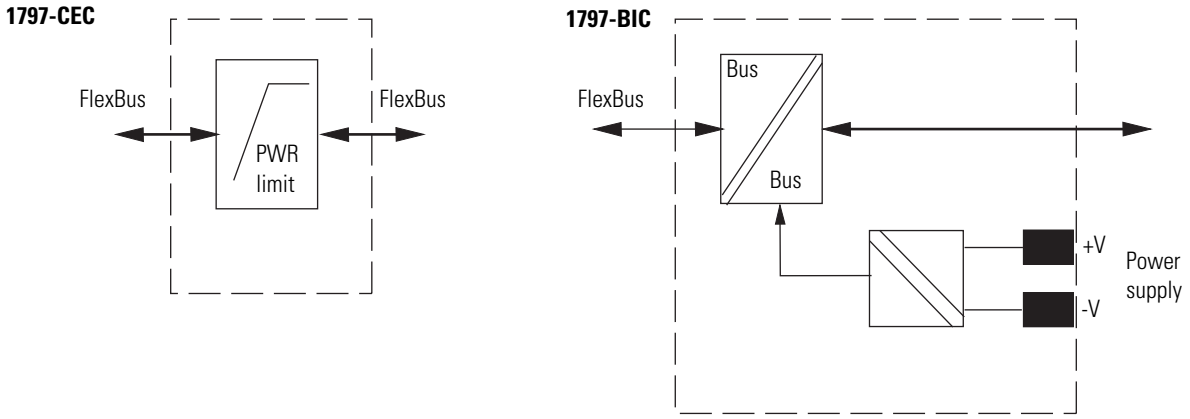

Attribute	1797-BIC
I/O module capacity	8[1]
Isolation voltage	System to System and System Slave Side to Power Supply: Galvanic to DIN EN 50020
Power consumption, max	0.15 A @ 18…32V DC
Power source failure, max input	U_m = 253V AC
Noxious gas exposure	Tested to severity level G3, ISA-S71.04-1985
Power dissipation	2.1 W
Thermal dissipation	7.2 BTU/hr
Dimensions HxWxD	87 x 94 x 75 mm 3.4 x 3.7 x 2.95 in.
Weight, approx.	0.2 kg (0.44 lbs)

(1) 8 FLEX Ex modules. Note that a total of eight I/O modules can be attached to a 1794 FLEX I/O adapter. The 1797-BIC and 1797-CEC are not included in this number. In intermixed systems, the number of 1797 FLEX Ex I/O modules (attached onto the 1797-BIC) plus the number of 1794 FLEX I/O modules (connected between the adapter and the 1797-CEC) cannot exceed eight.

Notes:

Select FLEX Ex I/O Modules

Step 2 – Select:

I/O modules based on field devices

FLEX Ex follows a producer/consumer model for remote I/O. Input modules produce data for the system. Controllers, output modules, and intelligent modules produce and consume data. The producer/consumer model multicasts data. This means that multiple nodes can consume the same data at the same time from a single device.

FLEX Ex I/O modules offer 2 through 16 I/O each. You can connect together a maximum of eight FLEX Ex I/O modules with a FLEX Ex I/O adapter, for a maximum of 128 I/O per assembly.

Mix and match digital and analog I/O to meet your application needs.

Digital I/O Modules

Digital I/O modules have digital I/O circuits that interface to on/off sensors (pushbuttons and limit switches) and actuators (motor starters, pilot lights, and annunciators).

These outputs are controlled by the PLC controller while the inputs control the state of corresponding bits in the PLC.

Features

- Modules detect, indicate, and report the following faults:
  - open input or output field devices or wiring
  - shorted output field devices
  - shorted input or output wiring
  - Selectable input filter times from less than 1 to 33 ms.
- LED for each channel indicating status of:
  - corresponding input device
  - output signal

Digital I/O Module Summary

Catalog Number	Inputs	Outputs	Terminal Base Unit	Electrical Range	Module Type
Input Modules					
1797-IBN16	16	—	1797-TB3, 1797-TB3S	—	Nonisolated NAMUR inputs
Output Modules					
1797-OB4D	—	4	1797-TB3, 1797-TB3S	—	Nonisolated source outputs

Modules Specifications

The following section shows more detailed module specifications in comparative groups to facilitate your selection based on your requirements.

1797-IBN16 16 Point Non-isolated NAMUR Input Module

- Fault detection, fault bits in data table and status indicator LED (per channel) blinking red (1 Hz)
- Lead breakage defeat on four-channel group basis via module DIP switch selection
- Fault detection can be disabled via data table
- Programmable digital input filtering 1...33 ms (OFF to ON and ON to OFF)
- All channels updated to FlexBus ≤ 500 µs
- Compatible with NAMUR sensors and dry contacts

Schematic drawing of the 1797-IBN16 module

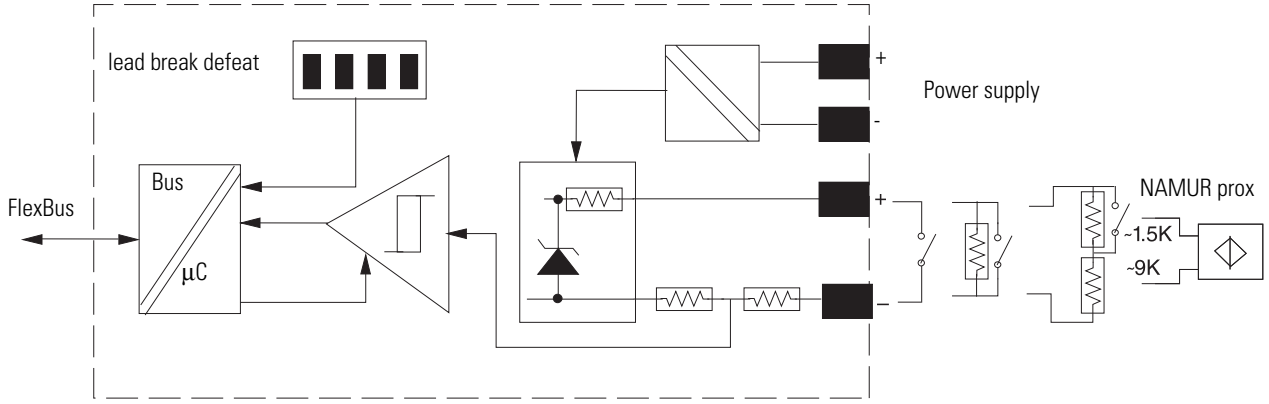

16 Point Non-isolated NAMUR Input Module

Specification	1797-IBN16
Number of inputs	16
Input type	EN 60947-5-6, NAMUR compatible
Current, on-state input, min	2.1 mA
Current, off-state input, max	1.2 mA
Hysteresis	0.2 mA
Input frequency, max	1000 Hz
Input pulse width	≥25µs for on or off
Load voltage, max	U/V = 7.5V DC
Short circuit current	7.5 mA
Short circuit threshold current	> 6 mA
Lead breakage threshold current	≤ 0.15 mA
Input delay time, OFF to ON	1 ms, 2 ms, 3 ms, 5 ms, 9 ms, 17 ms, 33 ms(1)
Input delay time, ON to OFF	1 ms, 2 ms, 3 ms, 5 ms, 9 ms, 17 ms, 33 ms(2)

16 Point Non-isolated NAMUR Input Module

Specification	1797-IBN16
Intrinsically safe input type	II (1)2G Ex ib[ia] IIC T4 Class I, Div. 1, Groups A-D and Class I, Zone 1, AEx ib/[ia] IIC
Noxious gas exposure	Tested to severity level G3, ISA-S71.04-1985
FLEX Ex power consumption	2.8 W @ 9V
Power dissipation	2.8 W
Thermal dissipation, max	9.6 BTU/hr
Dimensions (HxWxD), approx	46 x 94 x 75 mm (1.8 x 3.7 x 2.95 in.) 94 x 94 x 91 mm (3.7 x 3.7 x 3.6 in.) installed

(1) 1 ms default selectable.

(2) 1 ms default selectable.

1797-OB4D 24V DC 4 Point Non-isolated Source Output Module

- 4 output channels referenced to a single supply
- Yellow LED to indicate output state, output ON = LED ON
- Fault indication, signal to the backplane and status indicator LED (per channel) blinking red for fault
- Output short circuit detection
- Output wire-off detection
- Output wire-off detection on per channel basis via module data bit
- Electronically short-circuit protected, fault reported to controller
- All channels updated from the backplane every 2 ms
- Output fault state programmable

Schematic Drawing of the 1797-OB4D Module

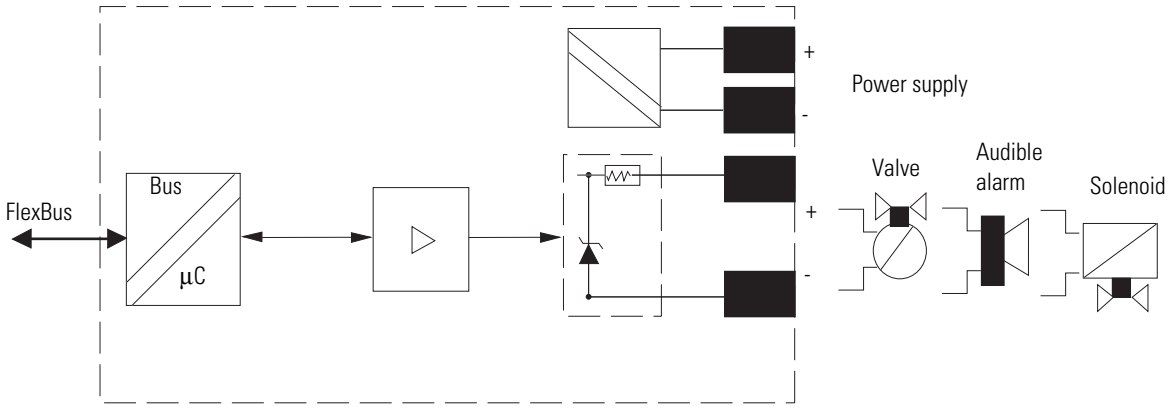

24V DC 4 Point Non-isolated Source Output Module

Specification	1797-OB4D
Number of outputs	4
Output load range	30…5000 Ω
Fault detection	Fault bits in data table and LED (per channel) blinking red (1 Hz)
Protection	Overload
Output delay time, OFF to ON	≤ 1.2 ms
Output delay time, ON to OFF	≤ 1.2 ms
Intrinsically safe output type	II (1)2G Ex ib[ia] IIC T4 Class I, Div. 1, Groups A-D and Class I, Zone 1, AEx ib/[ia] IIC
Noxious gas exposure	Tested to severity level G3, ISA-S71.04-1985
FLEX Ex power consumption	7.5 W @ 9V
Power dissipation	5 W
Thermal dissipation, max	17.07 BTU/hr
Dimensions (H x W x D)	46 x 94 x 75 mm (1.8 x 3.7 x 2.95 in.) 94 x 94 x 91 mm (3.7 x 3.7 x 3.6 in.) installed

1797-OB4D Output Voltage/Current Capability

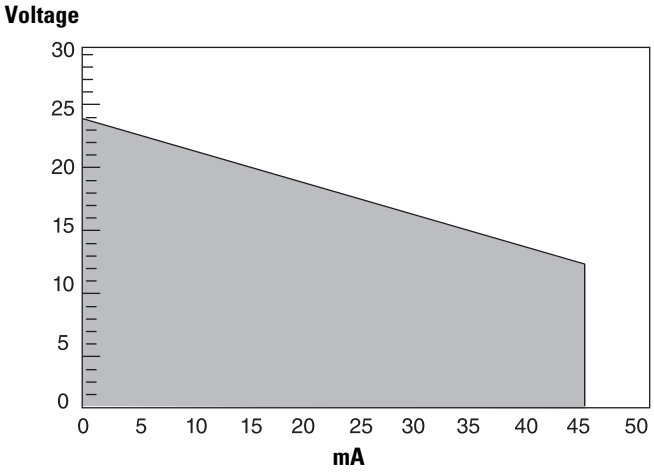

Analog Modules

Choose analog I/O modules when you need:

- **Configurable channels** allow the module to be used with a variety of sensors.
- **On-board scaling** eliminates the need to scale the data in the controller. Controller processing time and power are preserved for more important tasks, such as I/O control, communications, or other user-driven functions.
- **On-line configuration**. Modules can be configured in RUN mode using the programming software or the control program. This allows you to change configuration while the system is operating. For example, the input filter for a particular channel could be changed, or a channel could be disabled based on a batch condition.
- **Over- and under-range detections and indications** eliminates the need to test values in the control program, saving valuable processing power of the controller. In addition, since alarms are handled by the module, the response is faster and only a single bit needs to be monitored to determine if an error condition has occurred.
- **Ability to direct output device operation during an abnormal condition**. Each channel of the output module can be individually configured to hold its last value or assume a user-defined value on either a run-to-program or run-to-fault condition. This feature allows you to set the condition of your analog devices, and therefore your control process, which may help to ensure a reliable shutdown.
- **Selectable input filters** allows you to select from several different filter frequencies for each channel that best meets the performance needs of your application based on environmental limitations. Lower filter settings provide greater noise rejection and resolution. Higher filter settings provide faster performance.
- **Selectable response to broken input sensor**. This feature provides feedback to the controller that a field device is not connected or operating properly. This allows you to specify corrective action based on the bit or channel condition.

Analog I/O Module Summary

Catalog Number	Inputs	Outputs	Terminal Base Unit	Signal Range	Module Type
Input Modules					
1797-IE8	8	—	1797-TB3, 1797-TB3S	0…20 mA	16-bit single-ended, nonisolated inputs
1797-IE8H					16-bit single-ended, nonisolated inputs with HART capability
1797-IE8NF					16-bit single-ended, nonisolated inputs with noise filter
1797-IRT8				0…500 Ω -40…100 mV TC RTD	16-bit, nonisolated RTD thermocouple/mV inputs

Analog I/O Module Summary

Catalog Number	Inputs	Outputs	Terminal Base Unit	Signal Range	Module Type
Output Modules					
1797-OE8	—	8	1797-TB3, 1797-TB3S	0…20 mA 4…20 mA	16-bit single-ended, nonisolated outputs
1797-OE8H					16-bit single-ended, nonisolated outputs with HART capability

Module Specifications

The following section shows more detailed module specifications in comparative groups to facilitate your selection based on your requirements.

1797-IE8, 1797-IE8H (HART), and 1797-IE8NF (with Noise Filter) 8 Point 16-bit Single-ended Non-isolated Analog Input Modules

Eight single-ended input channels referenced to a single common

- 3-wire input for 2- and 3-wire transmitters
- Functional data: normal input
  input current = 4...20 mA, full-current range
  0...22 mA to allow for over and underrange indication
- Wire-off detection, signal to the backplane and LED (per channel) blinking red for fault
- Wire-off detection on per channel basis via module data bits
- Input filter cutoff programmable
- Resolution: 16 bits
- Accuracy: 0.1%
- The 1797-IE8 is typically used to act on change-of-state and high-speed applications. It is not compatible with HART handheld devices.
- The 1797-IE8NF has additional hardware filtering that damps out spurious signals and can be used for slower changing, steady-state processes. It has slower step response than the 1797-IE8 (100 ms versus 4 ms). It is compatible with HART handheld devices.
- The 1797-IE8H is similar to the 1797-IE8NF with real time data table updates. It also supports pass-through of HART commands as unscheduled ControlNet messages. It is compatible with FDT software packages.

Schematic Drawing of the 1797-IE8 Module

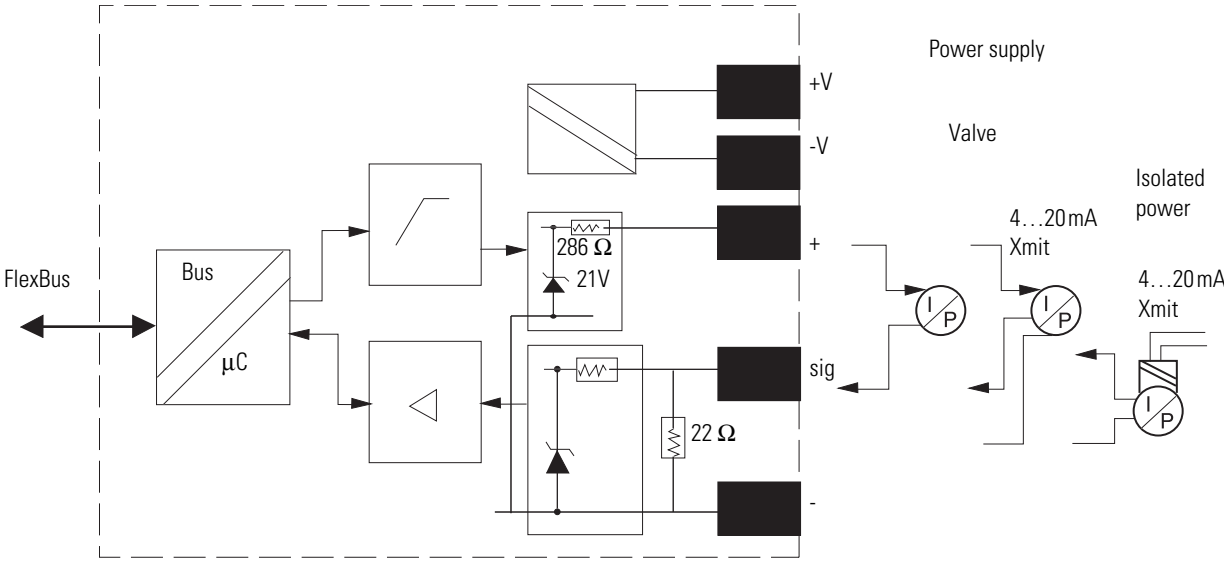

FLEX Ex Analog Input Comparison

Specification	1797-IE8	1797-IE8NF	1797-IE8H
Input resolution	16 bits		
Input signal range	0…22 mA		
Transfer characteristics, temperature drift	0.1% of output signal range at 20 °C (68 °F)		
Functional data range	> 15V @ 22 mA > 21.5V @ 0 mA		> 17V @ 22 mA > 23V @ 0 mA
Data format	Configurable		
Step response to 99% of Full Scale	4 ms	80 ms	100 ms
Update time, module to adapter	200…1600 µs		
Noxious gas exposure	Tested to severity level G3, ISA-S71.04-1985		
FLEX Ex power consumption	7.5 W @ 9V		7.1 W @ 9V
Power dissipation, max	5.2 W		
Thermal dissipation, max	17.75 BTU/hr		13.5 BTU/hr
Instrinsically safe input type	$U_0 \leq$ 23.7V $I_0 \leq$ 93.5 mA $P_0 \leq$ 555 mW		$U_0 \leq$ 24.4V $I_0 \leq$ 92.5 mA $P_0 \leq$ 565 mW
	II (1)2G Ex ib[ia] IIC T4 Class I, Div. 1, Groups A-D and Class I, Zone 1, AEx ib [ia] IIC		
Dimensions (HxWxD), approx.	46.0 x 94.0 x 75.0 mm (1.8 x 3.7 x 2.95 in.)		

1797-IRT8 8 Point 16-bit Non-isolated RTD Thermocouple/mV Input Module

- input channels referenced to a single common
  - RTD mode
  - RTD types Pt100, Pt200, Ni100, Ni200, Ni120, Cu10
  - 2-, 3-, and 4-wire connection
  - sensor lead breakage and short circuit detection all 4 leads
  - measuring resistance 0...500 Ω
  - accuracy: 0.1% of span at 20 °C, filter cutoff < 1 Hz
- mV mode
  - input voltage -40...100 mV differential sensing
  - sensor breakage detection
- thermocouple mode
  - types B, E, J, K, TXK/XK (L), N, R, S, T
  - cold junction compensation (CJC)
  - external reference junction (programmable)
  - sensor breakage detection
  - accuracy: 0.1% of span, filter cutoff < 1 Hz
  - accuracy of CJC: ± 1 C/K

Schematic Drawing of the 1797-IRT8 Module

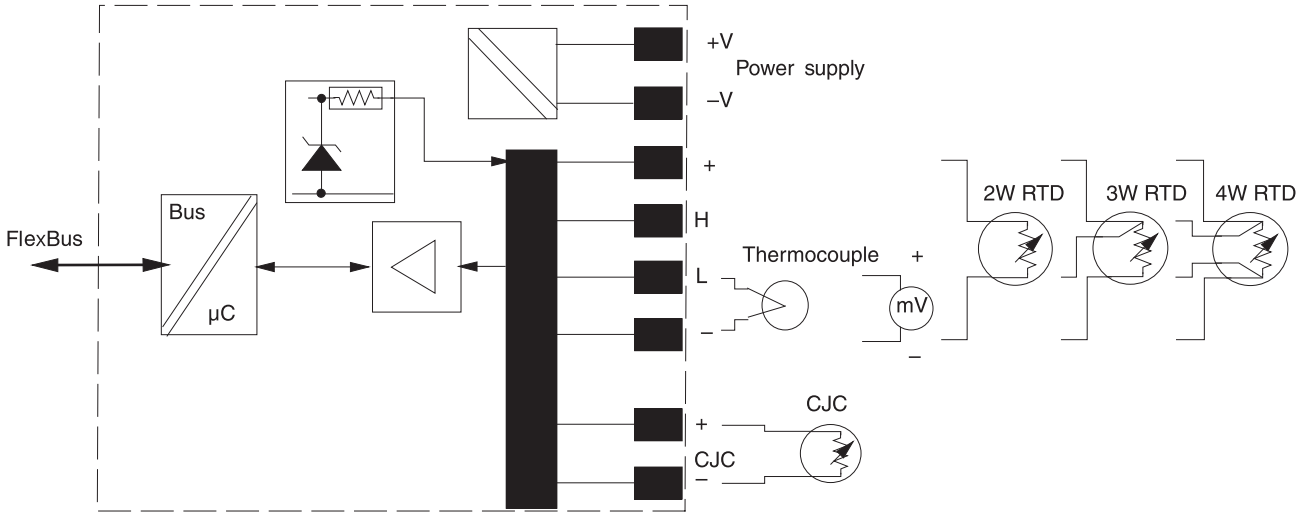

8 Point 16-bit Non-isolated RTD Thermocouple/mV Input Module

Specification	1797-IRT8
Input type	Suitable for Pt 100, Pt200, Ni 100, Ni120, Ni200, Cu10 RTD, Thermocouple Type B, E, J, K, N, R, S, T, TXK/XK(L) Configuration via internal bus

8 Point 16-bit Non-isolated RTD Thermocouple/mV Input Module

Specification	1797-IRT8
Input signal range	0…500 Ω -40…100 mV TC RTD
Settling time	8 ms to 99% of final value (mV mode, °F thermocouple)
Open RTD detection	Out of range upscale reading
Lead resistance compensation	< 15 Ω total
Transfer characteristics, accuracy	RTD: 0.1% of span @ 20 °C, filter cutoff < 1 Hz Thermocouple: 0.1% of span @ 20 °C, filter cutoff < 1 Hz Cold junction compensation: ± 1 °C
Temperature drift	150ppm/ °C (primary range)
Data organization	Overrange Alarm – Individually for each channel Lead Breakage Alarm – Individually for each channel Fault State – Individually for each channel (includes overrange, lead breakage and short circuit) Sensor Mode RTD 2, 3, or 4-wire – Common to groups of 4 channels (ch 0…3, ch 4…7) TC Sensor Type (for example TC, Type B, E, J..., RTD or mV) - Common to groups of 4 channels (ch 0…3, ch 4…7) Internal Reference Junction (TC mode) – Common to all channels (0 °C, 20 °C, 25 °C, 30 °C, 40 °C, 50 °C, 60 °C, 70 °C
Noxious gas exposure	Tested to severity level G3, ISA-S71.04-1985
FLEX Ex power consumption	1.6 W @ 9V
Power dissipation, max	1.6 W
Thermal dissipation, max	5.46 BTU/hr
Dimensions (H x W x D)	46 x 94 x 75 mm (1.8 x 3.7 x 2.95 in.) 94 x 94 x 91 mm (3.7 x 3.7 x 3.6 in.) installed

HART Interface Modules

FLEX Ex HART analog modules (1797-IE8H and 1797-OE8H) are ideal for use in applications that need connection with FDT (Field Device Tool) compatible asset management software, such as Rockwell Software FieldCare HART Communication bundle or Endress + Hauser Fieldcare. For HART Device Type Management (DTM) programs and drivers, go to http://www.ab.com/io, and select Configurations Files, DTM files for HART.

- FLEX HART analog modules can be used on ControlNet or EtherNet/IP. The FLEX Ex Ethernet adapter requires firmware v3.1 or later, which is flash upgradeable, to support these modules.
- Each HART field device is wired to its own input or output channel:
  - 8 single-ended channels
  - does not support multi-drop
  - 2- or 3-wire devices
- HART commands can be transmitted by unscheduled message:
  - sample RLL subroutines are available.
  - currently limited to one instance of RLL subroutine per module, one channel at a time.

FLEX Ex I/O Analog Output Modules

1797-OE8 and 1797-OE8H (HART) 8 Point 13-bit Single-ended Non-isolated Analog 8 Output Module

- Eight dual-ended output channels referenced over sense resistors to a single common
- Functional data:
  - normal output
  - current = 4...20 mA, full current
  - range = 0...22 mA to allow for over- and under-range indication
- Output wire-off detection, LED (per channel) blinking red for fault, threshold < 2 mA
- Output wire-off detection on per channel basis via module data bits
- Short circuit detection
- All channels updated to the backplane every 4 ms
- Resolution: 13 bits
- Accuracy: 0.1%
- One power supply loop for one module
- Output fault state programmable
- The 1797-OE8 and 1797-OE8H can be used in digital mode for low energy digital field devices.
- The 1797-OE8H is similar to the 1797-OE8 with real time data table updates. It also supports pass-through of HART commands as unscheduled ControlNet messages. It is compatible with FDT software packages.

Schematic Drawing of the 1797-OE8 and 1797-OE8H Modules

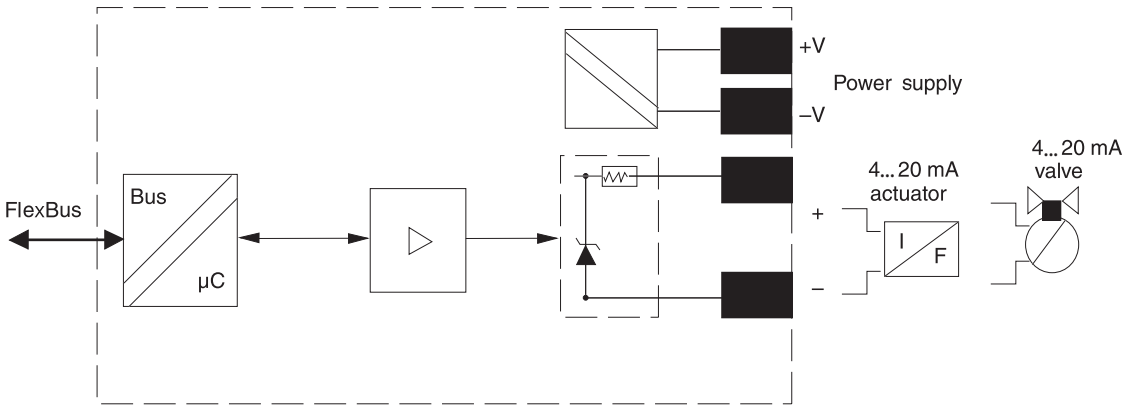

8 Point 13-bit Single-ended Non-isolated Analog 8 Output Modules

Specification	1797-OE8	1797-OE8H
Output resolution	13 bits	
Output load range	0…500 Ω @ 22 mA > 11V @ 22 mA	0…680 Ω @ 22 mA > 15V @ 22 mA
Step response to 99% of Full Scale	4 ms	18 ms; 115 ms with HART active

8 Point 13-bit Single-ended Non-isolated Analog 8 Output Modules

Specification	1797-OE8	1797-OE8H
Transfer characteristics, accuracy	0.1% of output signal at 20 °C (68 °F)	
Transfer characteristics, temperature drift	0.010%/C of output signal range	
Noxious gas exposure	Tested to severity level G3, ISA-S71.04-1985	
FLEX Ex power consumption	6.3 W @ 9V	6.1 W @ 9V
Power dissipation, max	5.4 W	6.1 W
Thermal dissipation, max	18.4 BTU/hr	20.8 BTU/hr
Intrinsically safe output type	II (1)2G Ex ib[ia] IIC T4 Class I, Div. 1, Groups A-D and Class I, Zone 1, AEx ib [ia] IIC	
Instrinsically safe input characteristics	Ch 0…7 Terminals: 0…1; 4…5; 8…9; 12…13; 17…18; 21…22; 25…26; 29…30 $U_0 \leq$ 21V $I_0 \leq$ 100 mA $P_0 \leq$ 520 mW	Ch 0…7 Terminals: 0…1; 4…5; 8…9; 12…13; 17…18; 21…22; 25…26; 29…30 $U_0 \leq$ 21.6V $I_0 \leq$ 92 mA $P_0 \leq$ 500 mW
Dimensions (H x W x D), approx	46 x 94 x 75 mm (1.8 x 3.7 x 2.95 in.) 94 x 94 x 91 mm (3.7 x 3.7 x 3.6 in.) installed	

1797-OE8 Output Voltage/Current Capability

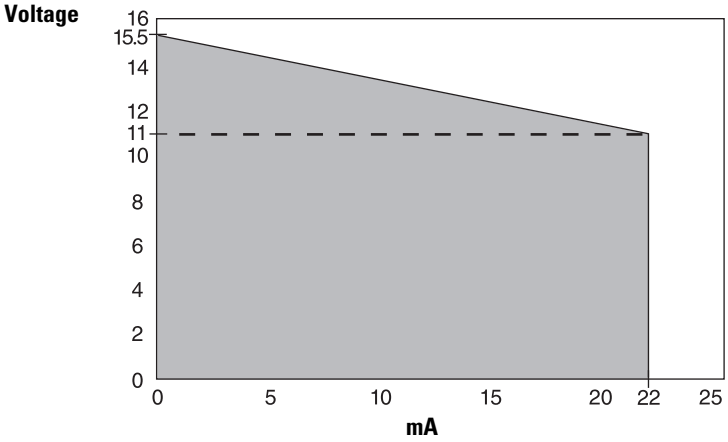

1797-OE8H Output Voltage/Current Capability

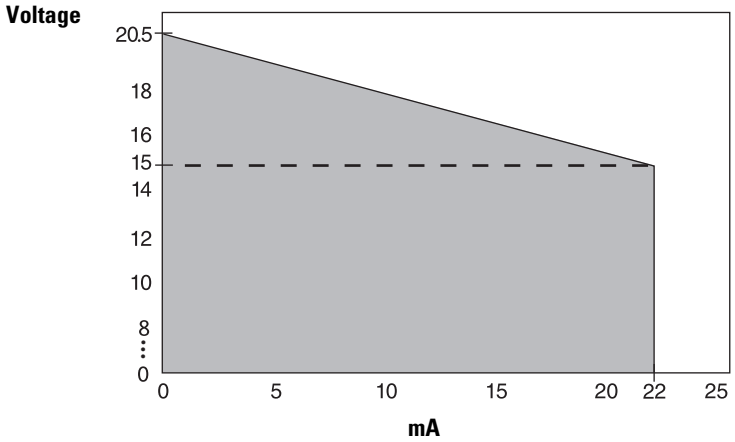

Counter I/O Module

Ideal for applications requiring rotational control, the FLEX Ex counter is essentially a tachometer with the capability of reporting frequency, acceleration, and direction. Outputs are activated by alarms. Input devices range from magnetic pickup to flowmeters, to incremental encoders to proximity detectors.

This intelligent I/O module is designed to perform high-speed frequency algorithms. The module provides two frequency inputs, two gate inputs, and two outputs. The frequency inputs are capable of accepting frequencies up to 32 kHz. The module accepts and returns binary data.

The counter measures frequency over a user-specified time interval. A frequency calculation can start before the time interval clock is synchronized with the frequency input to count over a user-selected sampling time or a user-defined number of frequency input pulses. All power for input devices (24V DC) is supplied by the module.

1797-IJ2 2 Input Frequency Counter Module

- Software configurable frequency operating mode, with independent selections per frequency input
- Frequency inputs, two gate inputs, and two outputs
- Functional data: four selectable ranges: 50 mV; 500 mV (magnetic pickup); flowmeter; and NAMUR
- Provides IS power to drive up to two NAMUR and two flowmeter frequency inputs and/or contact switches and NAMUR gate inputs
- NAMUR lead breakage indication for any lead, signal to the backplane and LED (per channel) blinking red for fault
- NAMUR lead breakage defeat on per channel basis via module data table (NAMUR inputs only)
- Frequency count range up to 32 kHz

- Calculate frequency on time interval or input count
- Programmable scaling
- Acceleration value calculated
- Maximum frequency or acceleration alarms
- All channels updated to the backplane every ≤ 4 ms (according to sampling time)

Schematic Diagram for the 1797-IJ2 Module

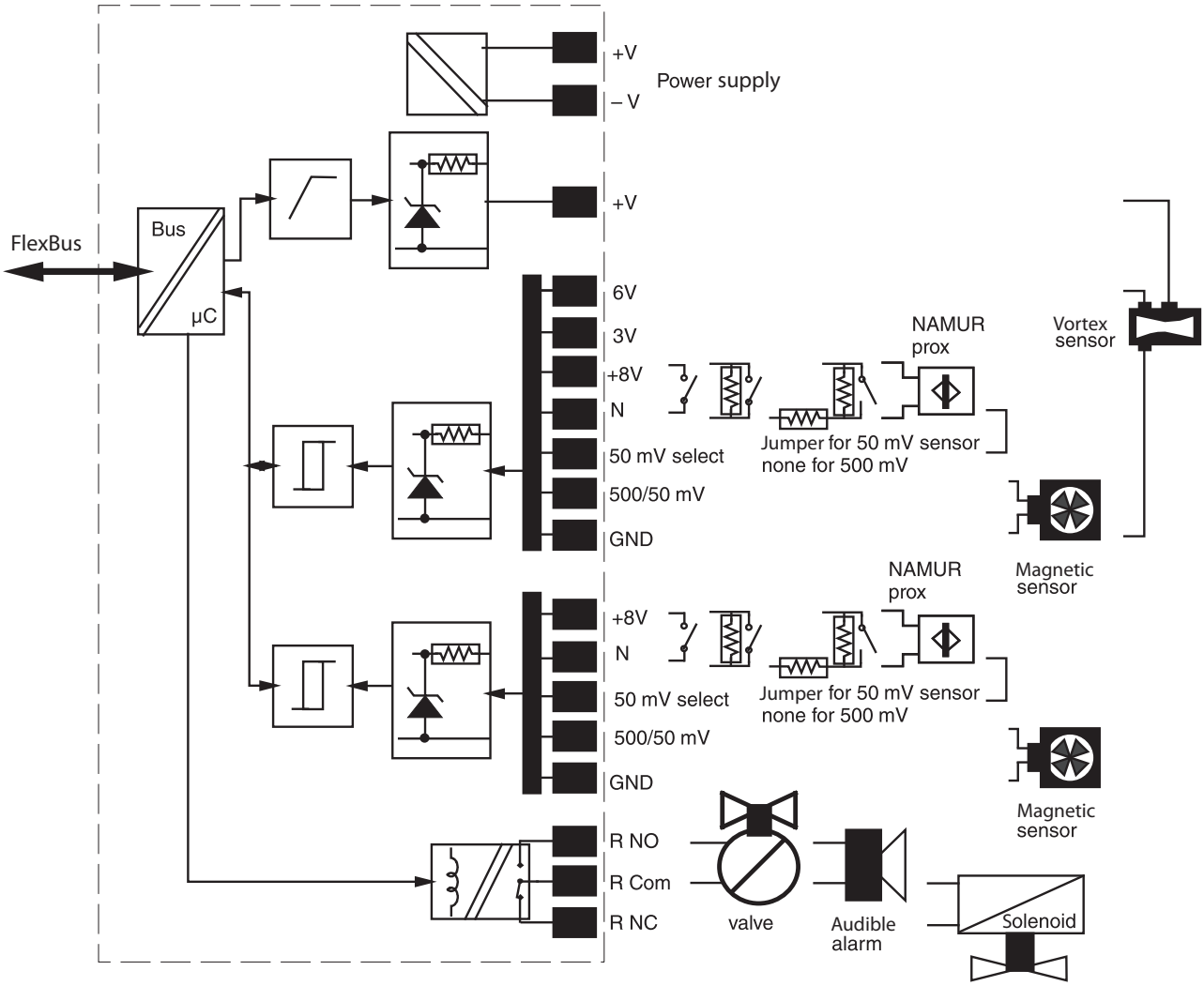

2 Input Frequency Counter Module

Specification	1797-IJ2
Number of inputs	2
Flowmeter input signal threshold	3V or 6V, selectable
Flowmeter input voltage available	< 15V @ 20 mA
Magnetic pickup input signal	50 mV or 500 mV, selectable
Processing time	≤ 4 ms

2 Input Frequency Counter Module

Specification	1797-IJ2
Input frequency range	1.0…32,767 Hz
Frequency resolution, min	Sampling Time – Accuracy 2 ms – 0.043% 4 ms – 0.033% 5 ms – 0.031% 10 ms – 0.027% 20 ms – 0.025% 50 ms – 0.023% 100 ms – 0.023% 200 ms – 0.023% 500 ms – 0.023% 1000 ms – 0.023%
Frequency input, characteristics	Magnetic pickup: 50 mV, 500 mV NAMUR: 8V, 8 mA Flowmeter: low ≥ 3V; high ≥ 6V
Impedance, frequency input	> 5 kΩ magnetic pickup > 10 kΩ flowmeter
Number of outputs	2
FLEX Ex power consumption	4.25 W
Power dissipation, max	4.25 W
Thermal dissipation, max	14.5 BTU/hr
Instrinsically safe input characteristics	EN 60947-5-6 (NAMUR)
Noxious gas exposure	Tested to severity level G3, ISA-S71.04-1985
Dimensions (H x W x D)	46 x 94 x 75 mm (1.8 x 3.7 x 2.95 in.) 94 x 94 x 91 mm (3.7 x 3.7 x 3.6 in.) installed

Select a FLEX Ex I/O Terminal Base Unit

Step 3 – Select:

the appropriate terminal base unit for your module and system

Each FLEX Ex I/O module requires a FLEX Ex I/O terminal base unit that snaps onto the DIN rail to the right of the I/O adapter. The terminal bases provide terminal connection points for the I/O wiring and plug together to form the backplane. They are available with screw, clamp, or spring terminations.

The following table is a comparison of general specifications for each FLEX Ex I/O terminal base unit. For compatibility with FLEX Ex I/O modules, see Table Digital I/O Module Summary on page 97 and Table Analog I/O Module Summary on page 101.

Terminal Base Wiring Diagrams

1797-TB3 and 1797-TB3S

Wiring when total module current draw is less than 8.5 W

Daisy-chaining Using Adapter Power Supply

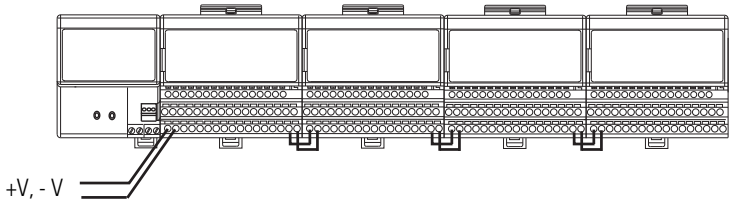

Use this method when the total module power draw is less that 8.5 W. Otherwise, power is connected to individual modules.

Wiring when total module current draw is greater than 8.5 W

Combination Daisy-chaining and Separate Power Supplies.

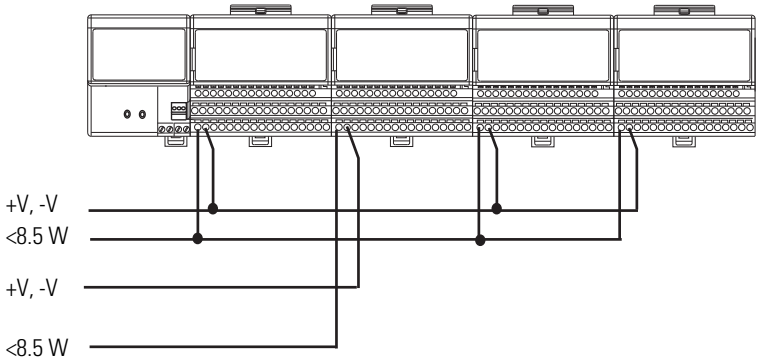

Separate power supply can be brought in on the last module in the chain if necessary. Make sure you do not jumper to the adapter if using this method.

Use this method when the total current draw through terminal base units is greater than 8.5 W.

Select a FLEX Ex I/O Power Supply

Step 4 – Select:

if power consumption exceeds the maximum for a single power supply, install additional power supplies

The power supply is an essential component in the operation of an intrinsically safe system. It must isolate the unsafe incoming power from the control system and limit the available energy to IS-safe levels.

FLEX Ex I/O power supplies provide power for the FLEX Ex ControlNet network, communication adapter, I/O modules, fiber hub, and IS field devices. No other power sources are needed to operate any components attached to the FLEX Ex system in the hazardous area. Power for valves, actuators, or transmitters come from the FLEX Ex modules.

FLEX Ex I/O power supply modules must be used to supply power to FLEX Ex I/O modules. Other power supplies are not allowed in order to meet the certification of the system. Power for valves, actuators, and transmitters come from the FLEX Ex modules.

There are two types of enclosures: (N-Type) explosion-proof with 1 inch conduit pipe thread input/output terminations that are certified in North America and (E-Type) flame-proof with increased safety input/output terminations that are certified to European standards. Each type is available in 24V DC or 85...253V AC for supply sources.

The 24V DC power supply includes dual power feeds for sour input redundancy whereas the AC power supplies support daisy chaining.

Common features include:

- four channels, 8.5 W output each channel
- outputs are IS galvanically isolated from the source
- all channels are independently IS limited

General Specification Comparison

Catalog	Description	Input Voltage, max	Output Power (W)	Dimensions (HxWxD), approx	Weight approx
1797-PS1N	FLEX Ex 85…250V AC Power Supply	250V AC	34 W(1)	174 x 174 x 140 mm (6.9 x 6.9 x 5.51 in.)	6 kg (13.2 lbs)
1797-PS1E	FLEX Ex 24V DC Power Supply	253V AC		260 x 174 x 140 mm (10.2 x 6.9 x 5.51 in.)	6.9 kg (15.2 lbs)
1797-PS2N2	FLEX Ex conduit pipe North American-certified Power Supply	32V DC max		174 x 174 x 140 mm (6.9 x 6.9 x 5.51 in.)	6.1 kg (13.4 lbs)
1797-PS2E2	FLEX Ex flame-proof European-certified Power Supply			260 x 174 x 140 mm (10.2 x 6.9 x 5.51in.)	7 kg (15.4 lbs)

(1) 8.5 W at each of 4 outputs.

E Type Power Supply

1797-PS1E
or
1794-PS2E2

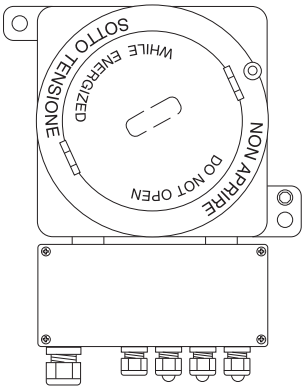

N Type Power Supply

1797-PS1N
or
1797-PS2N2

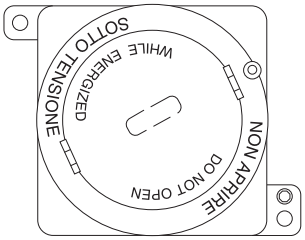

Understanding System Planning

Part of system planning is determining what modules are needed for the application, how many power supplies are needed, how to best partition the system, and where to locate the system cabinets.

A key task in the development cycle is determining the number of power supply outputs (thus power supplies) you will need.

Each power supply has four independent IS power outputs capable of 8.5W each. In this example, we required eleven IS power outputs so three power supplies were sufficient.

Power Requirements

Modules	Requires
Fiber hub	8.5 W
Two ControlNet adapters	8.5 W each
Two analog inputs	7.5 W each
Two analog outputs	6.3 W each
Two thermocouple inputs	1.6 W each
Two digital outputs	7.5 W each
Three NAMUR digital inputs	2.8 W each
Two counter inputs	4.25 W each

The total number of power supplies needed depends on the modules used and the total system configuration. The following illustration shows how this example may be configured.

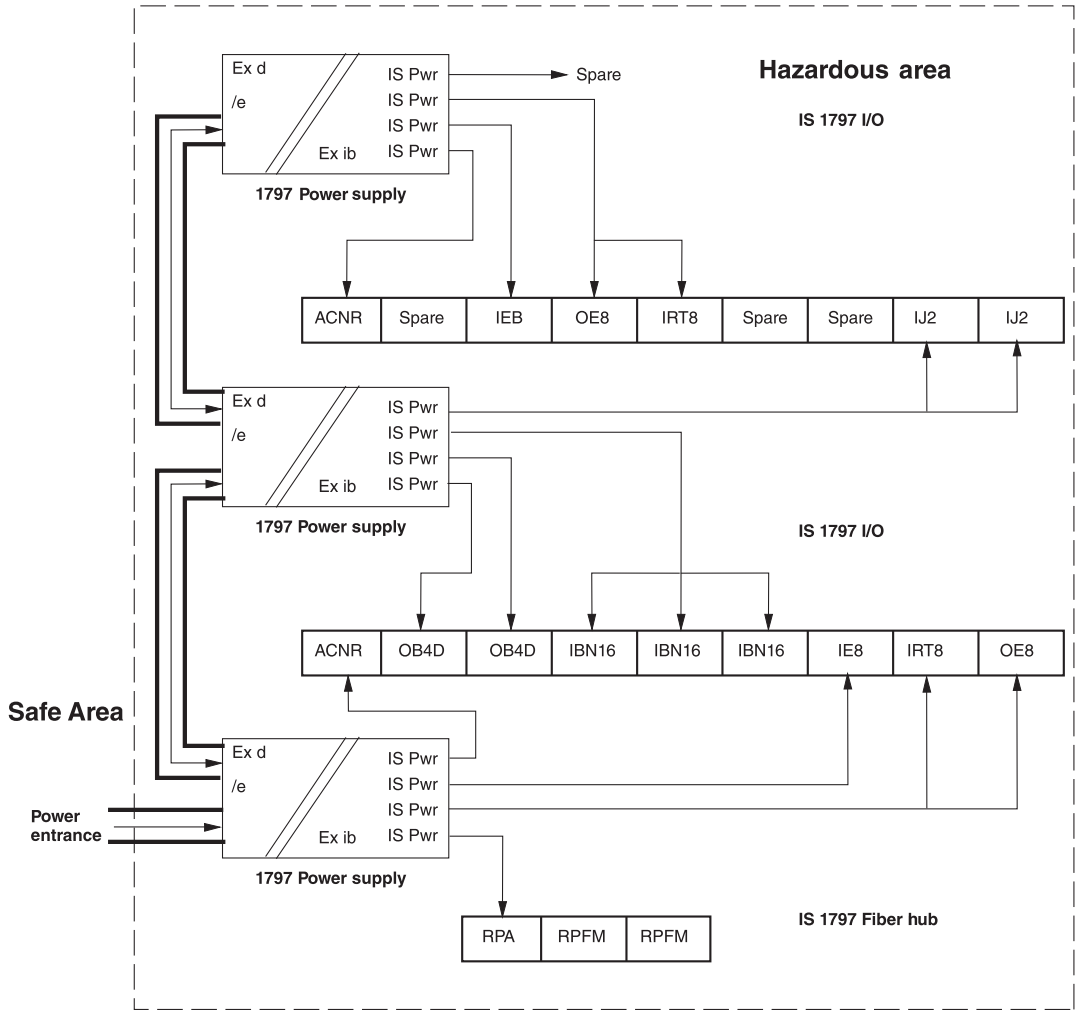

Assigning Power Supplies

Note the amount of power each module requires and assign it to a power supply output. Continue to assign modules to the power supply output until the supply's output power rating is consumed.

Each power supply output in the FLEX Ex system is rated for 8.5 W. Modules can be attached to the output until their combined power equals that number. Do not exceed the power supply maximum of 8.5 W.

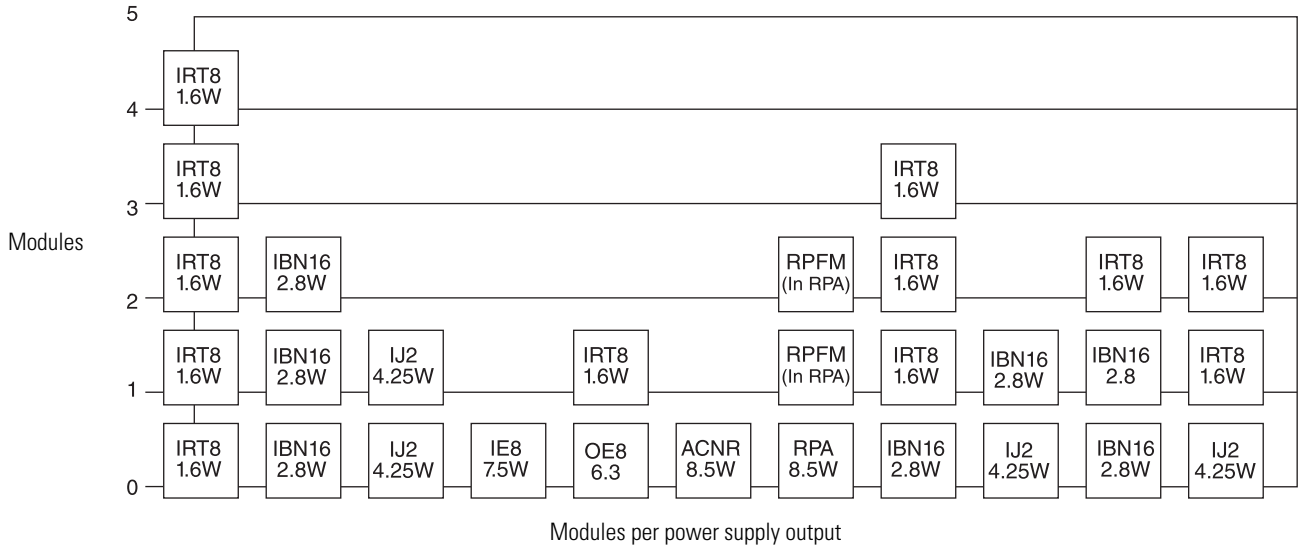

Hazardous Area Installation

The following illustration provides an example of how power supplies are arranged within the FLEX Ex system when using fiber hubs.

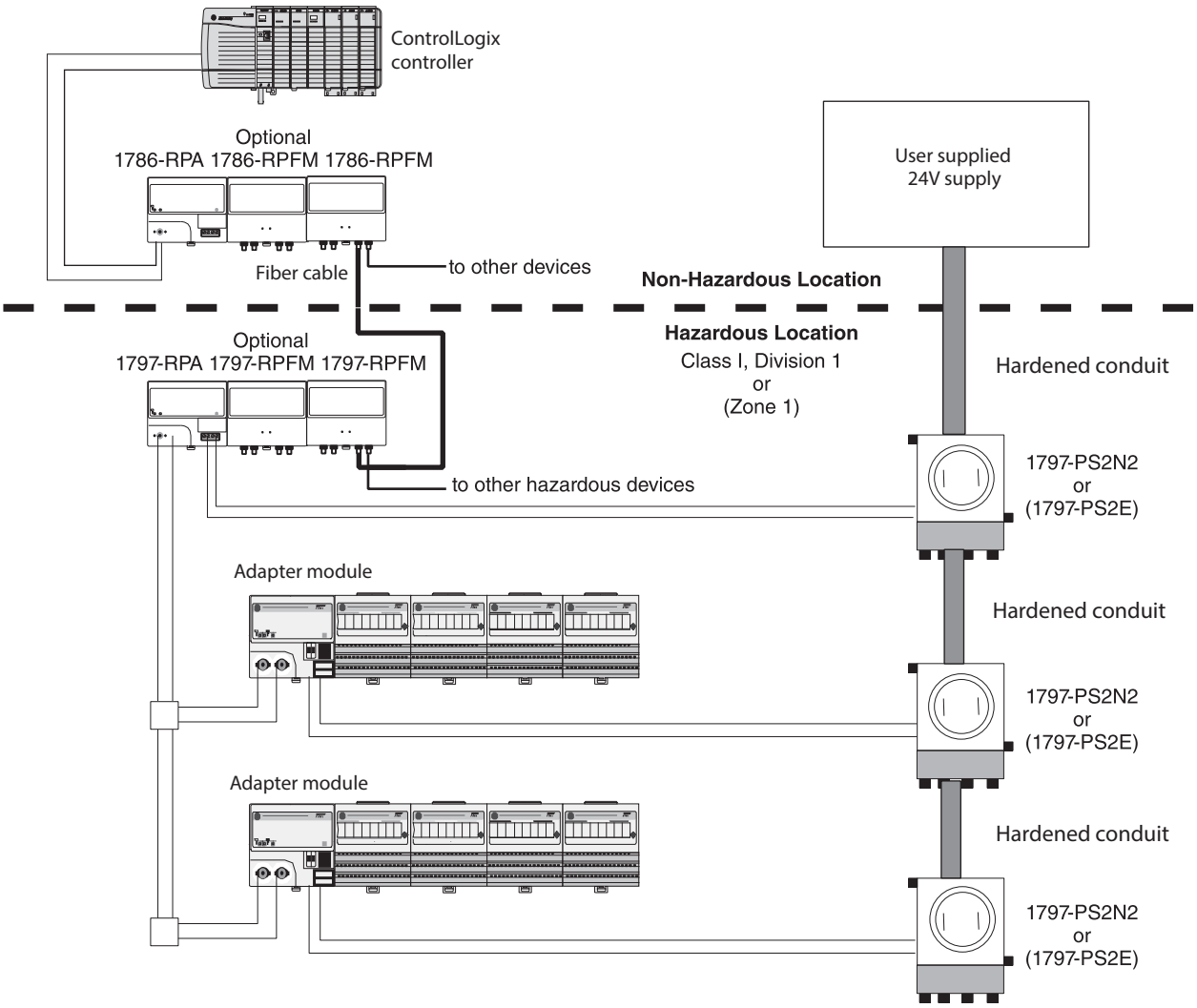

1797-PS1N and 1797-PS1E 85V…253V AC In/Quad-Ex DC Out

Type of Power Input

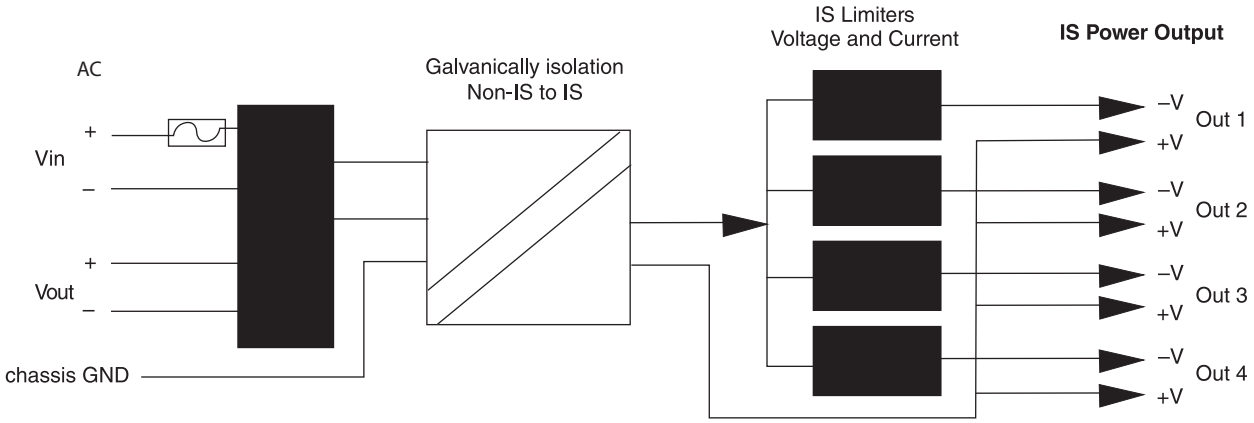

1797-PS2N2 and 1797-PS2E2 24V DC In/Quad-Ex DC Out

Type of Power Input

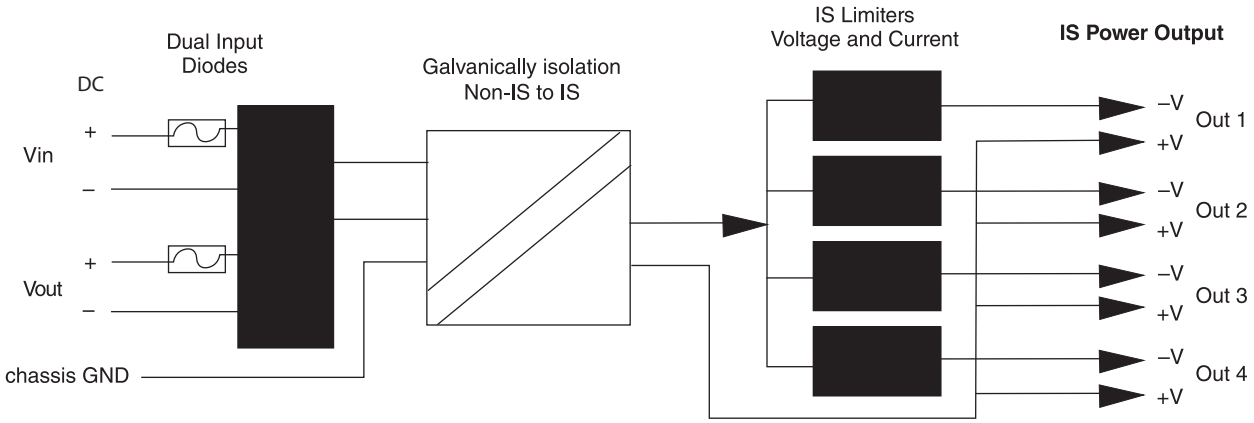

General Specifications Summary

Specification	1797-PS1N	1797-PS1E	1797-PS2N2	1797-PS2E2
Intrinsically safe module	Class I, Division 1, Groups A…D T4 (UL and C-UL) Class II, Division 1 Groups E…G (UL and C-UL) Class III (UL, FM and C-UL)	Zone1: II 2G Ex de [ib] IIC T4 Zone 22: II 3D Ex tD A22 IP54 T90°C X	Class I Division 1 Groups A…D T4 (UL, C-UL and FM) Class II Division 1 Groups E…G (UL, FM, CUL) Class III	Zone1: II 2G Ex de [ib] IIC T4 Zone 22: II 3D Ex tD A22 IP54 T90°C X
Input connector terminals	Terminals 1, 2, 4, 5	Terminals 1, 2, 4, 5	Terminals 1, 2, 4, 5	Terminals 1, 2, 4, 5
Operating voltage range	85…250V AC 120…250V DC	85…253V AC	18…32V DC	18…32V DC
Current consumption	0.9 A	0.9 A	3.1 A	3.1 A
Ripple	—		5% AC	

General Specifications Summary

Specification	1797-PS1N	1797-PS1E	1797-PS2N2	1797-PS2E2
Input power entry	1 in NPT, ≤ 6 in conduit allowed between power supply and seal (UL, FM and C-UL)	Increased safety	1 in NPT, 6 in conduit allowed between power supply and seal (UL and C-UL) 1 in NPT, 0 in conduit allowed between power supply and seal (FM)	Increased safety
Output connector terminals	Terminals 10…17			
Power supply output power (W)	34 W(1)			
Safe voltage, max U_m	250V AC	253V AC	40V DC	
Voltage U_0	≤ 9.5V			
Current I_0	≤ 1 A			
C_0 (IIC)	≤ 500 nF			
L_0 (IIC)	≤ 8µH			
Output cable resistance, max	≤ 0.1 Ω (both directions)			
Power supply input power	55 W			
Power dissipation	21 W			
Thermal dissipation, max	71.67 BTU/hr			
Dimensions (HxWxD), approx(2)	174 x 174 x 140 mm 6.9 x 6.9 x 5.51 in	260 x 174 x 140 mm 10.2 x 6.9 x 5.51 in	174 x 174 x 140 mm 6.9 x 6.9 x 5.51 in	260 x 174 x 140 mm 10.2 x 6.9 x 5.51 in
Weight, approx. (with packaging)	6 kg (13.2 lbs)	6.9 kg (15.2 lbs)	6.1 kg (13.4 lbs)	7 kg (15.4 lbs)
Protection class	IP 66/NEMA 7B	IP 65/NEMA 7B	IP 66/NEMA 7B	IP 65/NEMA 7B

(1) 8.5 W at each of 4 outputs.

(2) Refer to individual installation instructions for mounting dimensions.

Notes:

Mount the FLEX System

Step 6 – Select:

- *panel mount or DIN rail mount*
- *appropriate number of panels or DIN rails based on the number of modules and the physical requirements*
- *one end cap per controller system*

You can horizontally or vertically mount the FLEX I/O or FLEX Ex I/O system on a standard 35 mm DIN rail. The adapter and terminal base unit easily snap on the DIN rail by hand. Use a flat-blade screwdriver to remove components from the DIN rail.

Screw holes allow you to horizontally or vertically panel-mount your system in an enclosure. Maintain at least 25 mm (1 in.) of air space around your FLEX system.

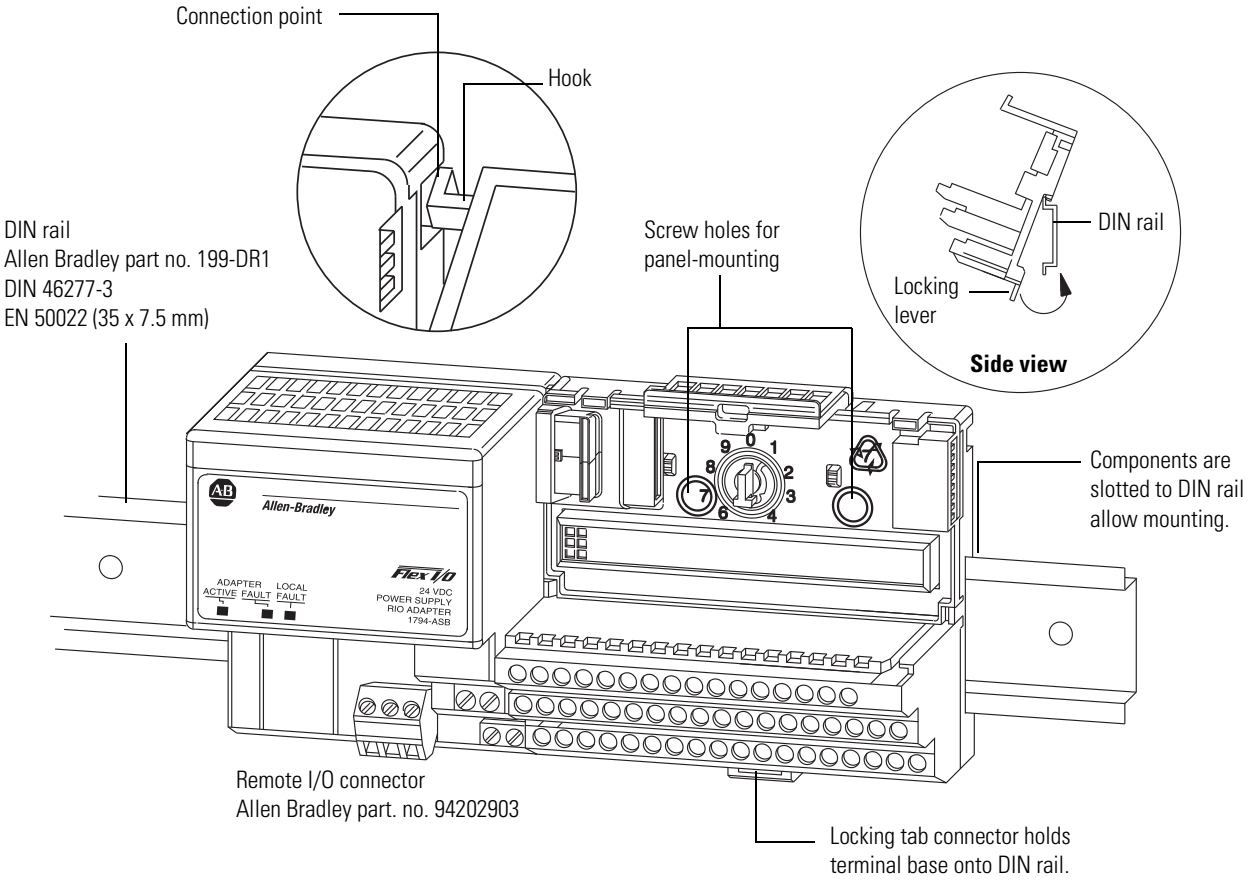

When properly installed, FLEX I/O and FLEX Ex I/O are grounded through the DIN rail to chassis ground. Use a zinc-plated, yellow-chromated steel DIN rail to assure proper grounding. Using other DIN rail materials, for example, aluminum or plastic, which can corrode, oxidize, or are poor conductors can result in improper or intermittent platform grounding.

If installing FLEX on non-recommended DIN rail materials, use the mounting holes provided with each terminal base, or use a 1794-NM1 mounting kit with an approved mounting bracket. Use mounting screws with star washers to provide the FLEX platform with a chassis ground connection that is not likely to be affected by shock, vibration, or oxidation over time.

The hook (on the terminal base unit) and adjacent connection point (on the communication adapter) keep the terminal base units tight together. These components are capable of maintaining a reliable connection in case of shock and/or vibration. Refer to the environmental specifications section for each module.

Select Optional Accessories

Step 5 – Select: *optional accessories for FLEX I/O and FLEX I/O-XT modules*

1794-CE1 and 1794-CE3 Extender Cables

Use one optional 1794-CE1 – 0.3 m (1 ft) or 1794-CE3 – 0.9 m (3 ft) extender cable, per system, to arrange your system in two rows or split your system into horizontal and vertical orientation. The cable can be used between any module or between adapters and modules.

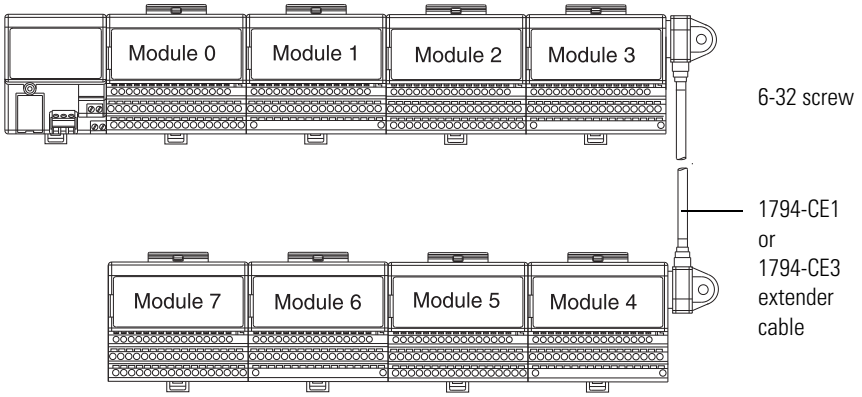

1794-NM1 FLEX I/O Mounting Kit

Use the optional 1794-NM1 FLEX I/O mounting kit to mount your FLEX I/O system on a panel without a DIN Rail.

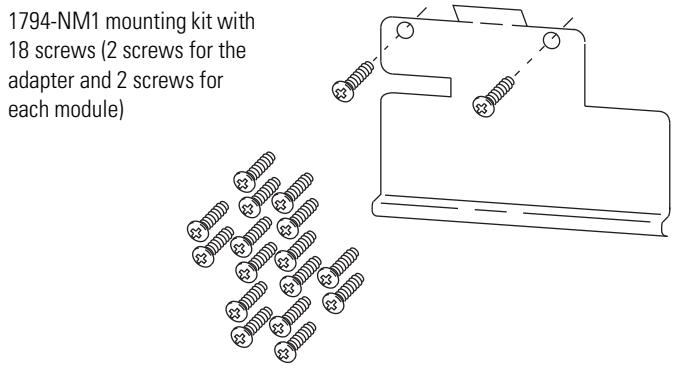

1492-EA35 DIN Rail Locks

When you use FLEX I/O modules in a high-vibration installation, and particularly when mounting the modules vertically, we recommend using DIN-rail locks (Allen-Bradley part number 1492-EA35).

1794-LBL FLEX I/O Label Kit

Use the label kit to tailor the label on your FLEX I/O terminal base unit to meet your needs. The label kit includes a diecut drawing and label sheet with five labels.

1794-N2 FLEX I/O Dummy Filler Module

This module is used to fill in an otherwise empty slot: a terminal base with no I/O module. It contains no electronics.

1794-CJC2

This Cold Junction Compensation kit contains two replacements for the CJCs supplied with 1794-IT8 and 1794-IRT8 modules.

Step 5 – Select:

optional accessories for FLEX Ex I/O modules

1797-BOOT ControlNet BNC Boot

Use the ControlNet BNC boot, trunk isolator, and marking kit in your cable connections.

The 1797-BOOT covers the BNC connector on the ControNet Ex trunk cable. The kit contains 50 pieces.

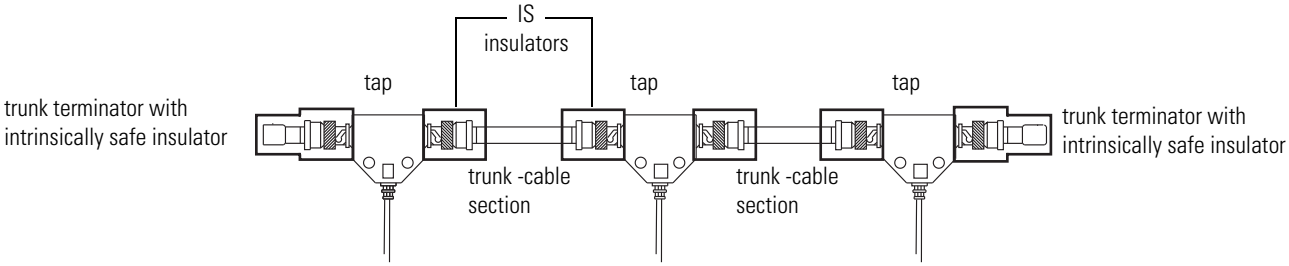

1797-INS Trunk Insulator and 1797-EXMK Marking Kit

The 1797-INS is a bag of 50 assorted insulators that you can use to replace those shipped with the product. The 1797-EXMK is a marking kit for FLEX Ex cable, containing 100 pieces.

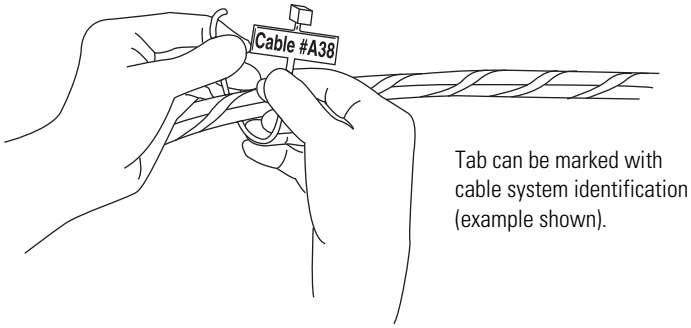

ControlNet Ex Taps

1797-TPS ControlNet Ex Straight T-Tap

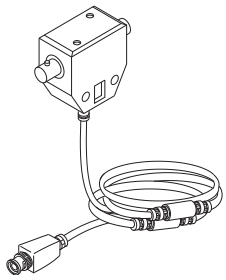

1797-TPR ControlNet Ex Right-Angle T-Tap

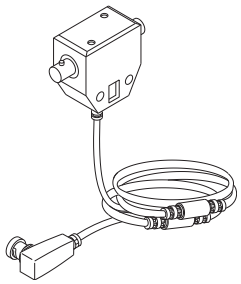

1797-TPYS ControlNet Ex Straight Y-Tap

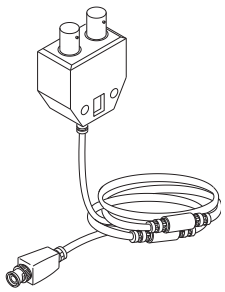

1797-TPYR ControlNet Ex Right-Angle Y-Tap

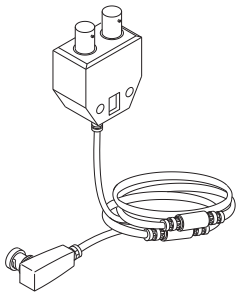

1797-XT ControlNet Ex 75Ω Terminator

The terminator is sold in lots of 50.

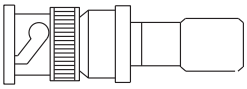

1797-TCAP ControlNet Tap Terminator

This kit contains five pieces.

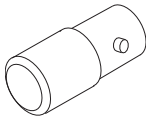

1786-RG6 Coax Trunk Cable

The 1786-RG6 Coax Trunk Cable can be used in Flex Ex applications in hazardous areas.

Notes:

Related Documentation

FLEX I/O and FLEX I/O-XT

Additional user documentation presents information according to the tasks you perform and the programming environment you use. Refer to the table for information on 1794 FLEX I/O, FLEX I/O-XT publications.

1794 FLEX I/O and FLEX IO-XT Related Publications

Type	Catalog Number	Installation Instructions	Publication Title	User Manual
Adapters	1794-AENT	1794-IN082	FLEX I/O EtherNet/IP Adapter Module	ENET-UM006
	1794-AENTR	1794-IN131	FLEX I/O Dual Port EtherNet/IP Adapter Modules	1794-UM066
	1794-AENTRXT			
	1794-ACN15	1794-IN128	FLEX I/O ControlNet Adapter Modules	CNET-UM001
	1794-ACN15K[1]			
	1794-ACNR15			
	1794-ACNR15XT			
	1794-ADN	1794-IN099	FLEX I/O DeviceNet Adapter Modules	
	1794-ADNK			
	1794-ASB2[1]	1794-IN098	FLEX I/O Remote I/O Adapter Modules	
	1794-ASB2K			
	1794-ASB[1]			1794-UM009
	1794-ASBLT[1]	1794-IN110	FLEX I/O Remote I/O Adapter Module	—

1794 FLEX I/O and FLEX IO-XT Related Publications

Type	Catalog Number	Installation Instructions	Publication Title	User Manual
Bases	1794-TB2	1794-IN092	FLEX I/O Terminal Base Units	—
	1794-TB3			
	1794-TB3K			
	1794-TB3S			
	1794-TB3SK			
	1794-TB32			
	1794-TB32S			
	1794-TB3T			
	1794-TB3TK			
	1794-TB3TS			
	1794-TB3TSK			
	1794-TB3G			
	1794-TB3GK			
	1794-TB3GS			
	1794-TB3GSK			
	1794-TBKD[1]			
	1794-TBN			
	1794-TBNK			
	1794-TBNF			
	1794-TB3GT	1794-IN133	FLEX I/O Grounded Cage Clamp Temperature Terminal Base Unit	—
	1794-TB62DS	1794-IN107	FLEX I/O D-Shell Terminal Base Units and Distribution Boards	—
	1794-TB37DS			
	1794-TB62EXD4X15[1]			
	1794-TB37EXD4CM8[1]			
	1794-TB37EXD4VM8[1]			
	1203-FB1	—	Installation 1203-FB1 FLEX I/O SCANport Base	1203-UM000

1794 FLEX I/O and FLEX IO-XT Related Publications

Type	Catalog Number	Installation Instructions	Publication Title	User Manual
AC	1794-IA8	1794-IN102	FLEX I/O AC Digital Input Modules	—
	1794-IA8I			
	1794-IA16			
	1794-IM8	1794-IN104	FLEX I/O 220V AC Digital Input and Output Modules	
	1794-IM16	1794-IN123	FLEX I/O 240V AC Digital Input and Output Modules	
	1794-OA8	1794-IN103	FLEX I/O AC Digital Output Modules	
	1794-OA8K [(1)]			
	1794-OA8I			
	1794-OA16			
	1794-OM8	1794-IN104	FLEX I/O 220V AC Digital Input and Output Modules	
	1794-OM16	1794-IN123	FLEX I/O 240V AC Digital Input and Output Modules	
DC	1794-IB8	1794-IN093	FLEX I/O Digital Input Modules	
	1794-IB16			
	1794-IB16D	1794-IN096	FLEX I/O Digital Input and Output Modules with Diagnostics	1794-UM061
	1794-IB16XT	1794-IN124	FLEX I/O-XT Digital DC Input and Output Modules	—
	1794-IB10XOB6	1794-IN083	FLEX I/O Digital Input and Output Modules	
	1794-IB10XOB6XT	1794-IN124	FLEX I/O-XT Digital DC Input/Output Modules	
	1794-IB16XOB16P	1794-IN083	FLEX I/O Digital Input and Output Modules	
	1794-IC16	1794-IN105	FLEX I/O 48V DC Digital Input and Output Modules	
	1794-IG16	1794-IN119	FLEX I/O 5V DC TTL Digital Input and Output Modules	
	1794-IH16	1794-IN118	FLEX I/O 125V DC Digital Input Module	

1794 FLEX I/O and FLEX IO-XT Related Publications

Type	Catalog Number	Installation Instructions	Publication Title	User Manual
DC	1794-IV16	1794-IN095	FLEX I/O Digital Sourcing Input and Sinking Output Modules	—
	1794-IB32	1794-IN093	FLEX I/O Digital Input Modules	
	1794-IV32	1794-IN122	FLEX I/O Digital Sourcing Input and Sinking Output Modules	
	1794-OB8	1794-IN094	FLEX I/O Digital DC Output Modules	
	1794-OB8EP			
	1794-OB8EPXT	1794-IN124	FLEX I/O-XT Digital DC Input and Output Modules	
	1794-OB16	1794-IN094	FLEX I/O Digital DC Output Modules	
	1794-OB16P			
	1794-OB16D	1794-IN096	FLEX I/O Digital Input and Output Modules with Diagnostics	1794-UM061
	1794-OB16PXT	1794-IN124	FLEX I/O-XT Digital DC Input and Output Modules	—
	1794-OB32P	1794-IN094	FLEX I/O Digital DC Output Modules	
	1794-OC16	1794-IN105	FLEX I/O 48V DC Digital Input and Output Modules	
	1794-OG16	1794-IN119	FLEX I/O 5V DC TTL Digital Input and Output Modules	
	1794-OV16	1794-IN095	FLEX I/O Digital Sourcing Input and Sinking Output Modules	
	1794-OV16P			
	1794-OV32	1794-IN122	FLEX I/O Digital Sourcing Input and Sinking Output Modules	
Relay	1794-OW8	1794-IN019	FLEX I/O 8-Channel Relay Output Modules	
	1794-OW8XT			

1794 FLEX I/O and FLEX IO-XT Related Publications

Type	Catalog Number	Installation Instructions	Publication Title	User Manual
Analog	1794-IE8	1794-IN100	FLEX I/O Input, Output and Input/Output Analog Modules	1794-UM062
	1794-IE8XT	1794-IN125	FLEX I/O-XT Input, Output and Input/Output Analog Modules	
	1794-IE12	1794-IN106	FLEX I/O 12-Channel DC Input, Output, and Input/Output Analog Modules	
	1794-IE8H	1794-IN108	FLEX I/O 8-Channel Input HART Analog Module	1794-UM063
	1794-OE4	1794-IN100	FLEX I/O Input, Output and Input/Output Analog Modules	1794-UM002
	1794-OE4XT	1794-IN125	FLEX I/O-XT Input, Output and Input/Output Analog Modules	
	1794-OE8H	1794-IN108	FLEX I/O 8-Channel Input HART Analog Module	1794-UM063
	1794-OE12	1794-IN106	FLEX I/O 12-Channel DC Input, Output, and Input/Output Analog Modules	—
	1794-IE4XOE2	1794-IN100	FLEX I/O Input, Output and Input/Output Analog Modules	1794-UM002
	1794-IE4XOE2XT	1794-IN125	FLEX I/O-XT Input, Output and Input/Output Analog Modules	1794-UM062
	1794-IE8XOE4	1794-IN106	FLEX I/O 12-Channel DC Input, Output, and Input/Output Analog Modules	
Isolated Analog	1794-IF4I	1794-IN038	FLEX I/O 4-Channel Isolated Input Analog Module	1794-UM008
	1794-IF4IXT	1794-IN129	FLEX I/O-XT Isolated Input Analog Modules	
	1794-IF4ICFXT	1794-IN130	FLEX I/O-XT Isolated Input Analog Module	
	1794-IF8IH	1794-IN115	FLEX I/O 8-Channel Isolated Input HART Analog Module	1794-UM065
	1794-IF8IHNFXT	1794-IN134	FLEX I/O-XT 8-Channel Isolated Input HART Analog Module	
	1794-OF4I	1794-IN037	FLEX I/O Isolated Output Analog Module	1794-UM008
	1794-OF4IXT	1794-IN129	FLEX I/O-XT Isolated Output Analog Modules	
	1794-OF8IH	1794-IN120	FLEX I/O Isolated Output HART Analog Module	1794-UM065
	1794-IF2XOF2I	1794-IN039	FLEX I/O Isolated Input/Output Analog Module	1794-UM008
	1794-IF2XOF2IXT	1794-IN129	FLEX I/O-XT Isolated Input Analog Modules	
Specialty	1794-IR8	1794-IN021	FLEX I/O 8-Channel Thermocouple Input Analog Module and RTD Module	1794-UM004
	1794-IRT8	1794-IN050	FLEX I/O Thermocouple/RTD Input Analog Modules	1794-UM012
	1794-IRT8XT			
	1794-IT8	1794-IN021	FLEX I/O 8-Channel Thermocouple Input Analog Module and RTD Module	1794-UM004

1794 FLEX I/O and FLEX IO-XT Related Publications

Type	Catalog Number	Installation Instructions	Publication Title	User Manual
Counters	1794-IJ2	1794-IN049	FLEX I/O 2 Input Frequency Modules	1794-UM011
	1794-IJ2XT			
	1794-VHSC	1794-IN067	FLEX I/O Very High Speed Counter Module	—
	1794-ID2	1794-IN063	FLEX I/O 2-Channel Incremental Encoder Module	1794-UM015
	1794-IP4	1794-IN064	FLEX I/O 4-Channel Pulse Counter Module	1794-UM016
Power Supply	1794-PS3	1794-IN069	FLEX I/O Power Supply Modules	—
	1794-PS13			
Accessories	1794-CE1	1794-IN012	FLEX I/O Interconnect Cable	
	1794-CE3			

(1) Discontinued catalogs may not have updated specifications. For more information about a specific discontinued catalog, refer to individual installation instructions.

FLEX Ex I/O

Additional user documentation presents information according to the tasks you perform and the programming environment you use. Refer to the table for information on 1794 FLEX Ex I/O publications.

1797 FLEX Ex I/O Related Publications

	Catalog Number	Description	Publication
Communication	1797-ACNR15	ControlNet Ex Redundant Media Adapter Installation Instructions	1797-IN014
	1797-RPA	ControlNet Ex Modular Repeater Adapter & Fiber Repeater Module Installation Instructions	1797-IN015
	1797-RPFM		
Intermixed	1797-BIC	FLEX Ex Bus Isolator and FlexBus Connector Installation Instructions	1797-IN513
	1797-CEC		
	1797-BCNR	FLEX Ex Redundant ControlNet Barrier Module Installation Instructions	1797-IN536
Bases	1797-TB3	FLEX Ex Terminal Base Units Installation Instructions	1794-IN001
	1797-TB3S		
Digital	1797-IBN16	FLEX Ex NAMUR Input Module Installation Instructions	1797-IN007
	1797-OB4D	FLEX Ex 24V DC Non-Isolated Source Output Module Installation Instructions	1797-IN006
Analog	1797-IE8	FLEX Ex Analog Module User Manual	1797-UM002
	1797-IE8H	FLEX Ex HART Analog Module User Manual	1797-UM005
	1797-IE8NF	FLEX Ex Analog Module User Manual	1797-UM002
	1797-IRT8	FLEX Ex Thermocouple/RTD Module Installation Instructions	1797-IN004
		FLEX Ex Thermocouple/RTD/mV Input Module User Manual	1797-UM003
Analog	1797-OE8	FLEX Ex Analog Modules User Manual	1797-UM002
	1797-OE8H	FLEX Ex 8 Output and HART Analog Module Installation Instructions	1797-IN003
		FLEX Ex HART Analog Modules User Manual	1797-UM005
Counter	1797-IJ2	FLEX Ex Frequency Input Module Installation Instructions	1797-IN009

1797 FLEX Ex I/O Related Publications

	Catalog Number	Description	Publication
Power supplies	1797-PS1N	FLEX Ex 85…250V AC In/Quad-Ex DC Out Power Supply Installation Instructions	1797-IN534
	1797-PS1E	FLEX Ex 85…253V AC In/Quad-Ex DC Out Power Supply Installation Instructions	1797-IN533
	1797-PS2N2	FLEX Ex Power Supply Installation Instructions	1797-IN012
	1797-PS2E2	FLEX Ex Power Supply Installation Instructions	1797-IN535
Accessories	1797-EXMK	FLEX Ex Cable Marking Kit Installation Instructions	1797-IN023
	1797-TCAP	ControlNet Tap Terminator Installation Instructions	1797-IN030

For More Information

If you would like a manual, you can:

- download a free electronic version from the Internet: http://www.rockwellautomation.com/literature/
- purchase a printed manual by contacting your local Allen-Bradley distributor or Rockwell Automation representative.

Notes:

Rockwell Automation Support

Rockwell Automation provides technical information on the Web to assist you in using its products.
At http://www.rockwellautomation.com/support/, you can find technical manuals, a knowledge base of FAQs, technical and application notes, sample code and links to software service packs, and a MySupport feature that you can customize to make the best use of these tools.

For an additional level of technical phone support for installation, configuration, and troubleshooting, we offer TechConnect support programs. For more information, contact your local distributor or Rockwell Automation representative, or visit http://www.rockwellautomation.com/support/.

Installation Assistance

If you experience a problem within the first 24 hours of installation, review the information that is contained in this manual. You can contact Customer Support for initial help in getting your product up and running.

United States or Canada	1.440.646.3434
Outside United States or Canada	Use the Worldwide Locator at http://www.rockwellautomation.com/support/americas/phone_en.html, or contact your local Rockwell Automation representative.

New Product Satisfaction Return

Rockwell Automation tests all of its products to ensure that they are fully operational when shipped from the manufacturing facility. However, if your product is not functioning and needs to be returned, follow these procedures.

United States	Contact your distributor. You must provide a Customer Support case number (call the phone number above to obtain one) to your distributor to complete the return process.
Outside United States	Please contact your local Rockwell Automation representative for the return procedure.

Documentation Feedback

Your comments will help us serve your documentation needs better. If you have any suggestions on how to improve this document, complete this form, publication RA-DU002, available at http://www.rockwellautomation.com/literature/.

Rockwell Automation maintains current product environmental information on its website at http://www.rockwellautomation.com/rockwellautomation/about-us/sustainability-ethics/product-environmental-compliance.page.

Rockwell Otomasyon Ticaret A.Ş., Kar Plaza İş Merkezi E Blok Kat:6 34752 İçerenköy, İstanbul, Tel: +90 (216) 5698400

www.rockwellautomation.com

Power, Control and Information Solutions Headquarters

Americas: Rockwell Automation, 1201 South Second Street, Milwaukee, WI 53204-2496 USA, Tel: (1) 414.382.2000, Fax: (1) 414.382.4444
Europe/Middle East/Africa: Rockwell Automation NV, Pegasus Park, De Kleetlaan 12a, 1831 Diegem, Belgium, Tel: (32) 2 663 0600, Fax: (32) 2 663 0640
Asia Pacific: Rockwell Automation, Level 14, Core F, Cyberport 3, 100 Cyberport Road, Hong Kong, Tel: (852) 2887 4788, Fax: (852) 2508 1846

Publication 1794-SG002G-EN-P - April 2020
Supersedes Publication 1794-SG002F-EN-P - January 2017

Copyright © 2020 Rockwell Automation, Inc. All rights reserved.