Technical Data

Original Instructions

Molded Case Circuit Breaker Specifications

Bulletin 140G, 140MG

Topic	Page
Introduction to Circuit Breakers	3
Circuit Breaker Basics	3
Anatomy of Bulletin 140G Circuit Breakers	6
Internal Accessories	11
External Accessories	11
Properties of a Circuit Breaker	15
Circuit Protections and Device Self-Protections	19
Circuit Breaker Applications	21
Applying Molded Case Circuit Breakers to North American Guidelines	22
Selecting a Circuit Breaker When Application Follows U.S. Guidelines	23
Specialty Operating Conditions	26
Product Overview	29
Device Types and Accessories	29
Product Selection—Molded Case Circuit Breakers	31
125 A, G-Frame Molded Case Circuit Breakers	32
125 A, H-Frame Molded Case Circuit Breakers	34
225 A I-Frame Case Circuit Breakers	40
250 A, J-Frame Molded Case Circuit Breakers	42
400 A, K-Frame Molded Case Circuit Breakers	48
800 A, M-Frame Molded Case Circuit Breakers	54
1200 A, N-Frame Molded Case Circuit Breakers	59
1200 A, NS-Frame Molded Case Circuit Breakers	63
2000...3000 A, R-Frame Molded Case Circuit Breakers	66
Product Selection—Motor Circuit Protectors	68
Catalog Number Explanation	69
Motor Ratings	71
Product Selection—Motor Protection Circuit Breakers	74
Catalog Number Explanation	75
Product Selection—Molded Case Switches	76
Catalog Number Explanation	76
Factory-installed Modifications	78
Accessories	79
Internal Accessories	79
External Accessories	83
Terminal Accessories	93
Replacement Parts	96

Topic	Page
Specifications	101
Bulletin 140G Molded Case Circuit Breakers	101
Bulletin 140G Molded Case Switches	106
Bulletin 140G Current-limiting Molded Case Circuit Breakers	108
Bulletin 140MG Motor Circuit Protectors	110
Bulletin 140MG Motor Protection Circuit Breakers	113
Temperature Derating for All Bulletin 140G/MG Devices	114
Watt Loss for All Bulletin 140G/MG Devices	120
Accessory Specifications	123
Electrical Diagrams	131
Status Contacts	131
Protection/Control Accessories	134
Operators	138
Trip and Let-through Curves	140
Using Trip and Let-through Curves	140
Trip and Let-through Curve Index	142
Bulletin 140G Thermal-magnetic MCCB Trip Curves	144
Bulletin 140G Electronic MCCB Trip Curves	170
Bulletin 140G Current-limiting MCCB Total Let-through Curves	190
Bulletin 140MG Motor Circuit Protectors Trip Curves	194
Bulletin 140MG Motor Protection Circuit Breakers Trip Curves	202
Approximate Dimensions	204
Bulletin 140G/MG G-Frame	204
Bulletin 140G/MG H-Frame	215
Bulletin 140G/MG I-Frame	227
Bulletin 140G/MG J-Frame	239
Bulletin 140G/MG K-Frame	250
Bulletin 140G/MG M-Frame	258
Bulletin 140G/MG N-Frame	265
Bulletin 140G NS-Frame	274
Bulletin 140G R-Frame	279
Bulletin 1494V Variable Depth, Flange-operated Circuit Breaker Operating Mechanisms	283
Additional Resources	285

Summary of Changes

This publication contains the following new or updated information. This list includes substantive updates only and is not intended to reflect all changes.

Topic	Page
Clarified current-limiting breaker selection cat. nos.	36, 37, 38, 39
Changed I_{cs} values to be a percentage of I_{cu}	60, 64, 67

Circuit Breaker Basics

Throughout this section, the terms Bulletin 140G and Bulletin 140G/MG broadly refer to both Bulletin 140G and 140MG devices and accessories.

A circuit breaker is a reusable semi-automatic switching device that is designed to protect downstream devices and wiring from harmful conditions in the power supply that runs through the breaker, while also allowing the complex power demands of the system to pass through. Breaker design specifics are defined by multiple standards: Bulletin 140G circuit breakers are broadly designed for global industrial application for low-voltage, three-phase power systems and are subject to the details of both UL and IEC standards. The technical definition of a circuit breaker varies between standards organizations—some commonly used definitions are below.

The National Electrical Manufacturers Association (NEMA) defines circuit breakers as "devices designed to open and close a circuit by non-automatic means, and to open the circuit automatically on a predetermined overcurrent without injury to itself when properly applied within its rating."

The International Electrotechnical Commission (IEC) Standard IEC 60947-2 defines a circuit breaker as "a mechanical switching device, capable of making, carrying and breaking currents under normal circuit conditions and also making, carrying for a specified time, and breaking currents under specified abnormal circuit conditions such as those of short-circuit."

Figure 1 - Bulletin 140G Family of Circuit Breakers

Circuit breakers are referred to by specific design elements for type of construction and functionality. For example, Figure 2 shows the IEC specification that includes several distinctions of circuit breakers. Under these classifications, Bulletin 140G circuit breakers can be referred to as molded-case and air-break devices, with a mix of dependent operation and stored-energy operation, as well as a variety of overcurrent release protection packages. The term **molded case** means that the construction of the circuit breaker is an assembled unit surrounded by an insulated housing; the term **air-break** means that the breaker's internal arcing chambers have normal air as opposed to an inert gas or a sealed vacuum space. Anatomy of Bulletin 140G Circuit Breakers explains operating mechanism types and circuit protection options.

Figure 2 - IEC Circuit Breaker Classifications

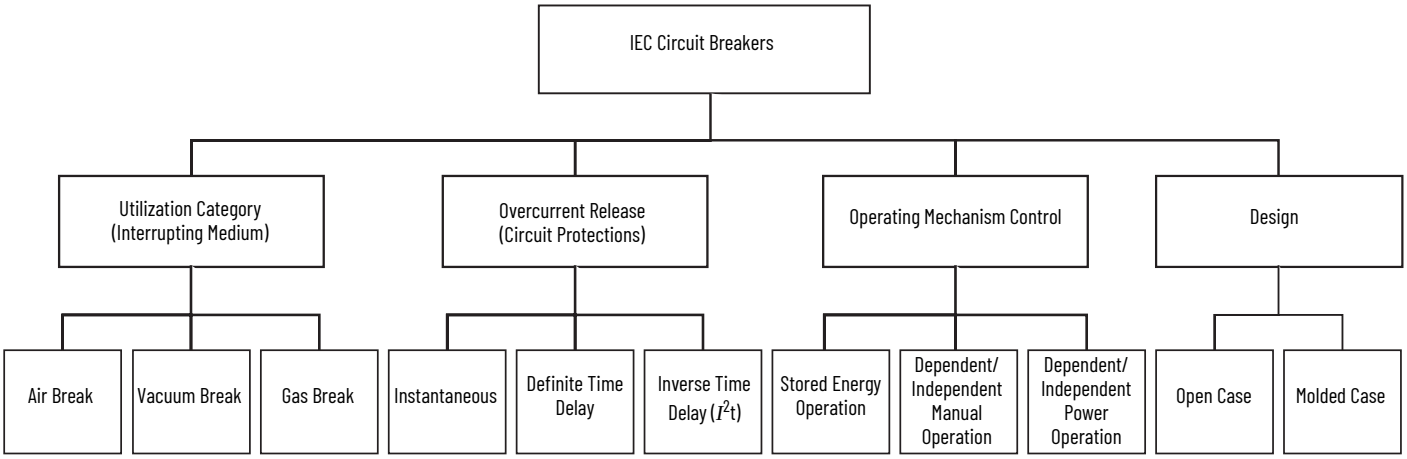

The Bulletin 140G/MG product family includes circuit breakers that are tailored to specific applications, including industrial control panels, motors, and general switching use. The breakers are designed to operate with high interrupting capacity and a minimal mounting footprint in global three-phase power applications that range from 10...3000 A, at 220...690V AC. You can also apply Bulletin 140G/MG breakers in single-phase systems, DC power systems, and systems with neutral conductors. Your exact circuit breaker selection is driven by the needs of your application. Table 1 lists the broad hardware categories and the considerations required for each. You must consider all of the categories to develop a full solution.

Table 1 - Circuit Breaker and Accessory Considerations

Device Type	Functional Consideration	More Information
Main device type	Application purpose, standards compliance, high-level features	Bulletin 140G and 140MG Device Types on page 4
Breaking Frame size	Operating current, interrupting capacity	Anatomy of Bulletin 140G Circuit Breakers on page 6
Trip Unit type	Circuit protection features, adjustability	
Internal Accessories	Additional protection, data signaling, control	
External Accessories	Operation, isolation, personnel protection	
Terminal Connection Accessories	Power supply connection on line and load sides	

Bulletin 140G and 140MG Device Types

There are four types of devices in the Bulletin 140G and 140MG product families. Three of these devices, Molded Case Circuit Breakers (MCCBs), Motor Circuit Protectors (MCPs), and Motor Protection Circuit Breakers (MPCBs), are full circuit breakers with various circuit protections tailored to their intended application. The fourth type, Molded Case Switches, are switches that use the molded case breaker platform for improved performance.

These four device types are often used together in an electrical system to distribute power and protect devices and connections. Figure 3 represents a common example of multiple 140G products implemented in a system to create a multi-starter control panel. The device at the top is an MCCB, which is acting as both the main disconnect and feeder protection. The main MCCB feeds several branches downstream within this example control panel. On the left, MCPs and MPCBs are protecting motor loads. On the right, MCCBs provide branch short-circuit protection and overload protection for general loads.

Figure 3 - Typical Multi-starter Control Panel

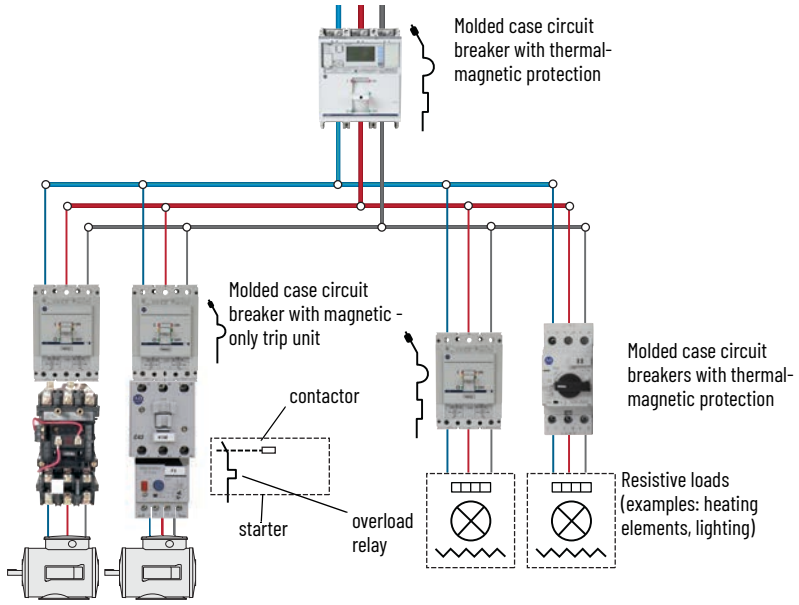

Molded Case Circuit Breakers (Bulletin 140G)

Molded Case Circuit Breakers (MCCBs) are designed to provide overcurrent protection for conductors and equipment by opening automatically before the current reaches a value and duration that causes excessive or dangerous temperature to the conductors or conductor insulation. These devices can also serve as the main disconnecting means for a control panel. MCCBs are commonly implemented as feeder breakers or branch protection devices. This device type's main function generally pertains to low-level overcurrent and short-circuit current protections. These types of circuit breakers are often described as thermal-magnetic devices; however, an increasing number of these devices are also electronic circuit breakers. Electronic breakers provide more protection functions and adjustability, which allows the protection curves to be customized to a specific application.

Bulletin 140G MCCBs include a variation of the MCCB that is defined as **current limiting**. Current limiting circuit breakers under UL 489 have a specific additional function that limits the energy that is allowed through the breaker when the breaker is tripped. According to UL 489 standard, current limiting circuit breakers are identified "Current Limiting" on the front and have a label on the right side that specifies peak current and specific let-through energy values. In the United States, the National Electrical Code (NEC) defines how this protection is selected in Sections 240-2, 240-3, and 240-4. In Canada, there are similar references in the Canadian Electric Code, C22.1-12. For IEC applications, IEC 60204-1 provides guidance for the construction of industrial control panels.

Motor Protection Circuit Breakers (Bulletin 140MG)

MPCBs are an application-specific variation of the MCCB that combines the short-circuit current protection and circuit isolation functionality of the MCCB with the motor overcurrent protection of a traditional overload relay. These devices are traditionally used in two-component starter applications, with a contactor to control a motor load. MPCBs are UL 489 Listed as circuit breakers and verified as motor overload relays. Breakers that are applied in North America are typically 80% rated, meaning that they can only be used continuously at 80% of their thermal rating (see page 17). Allen-Bradley® MPCBs are 100% rated, allowing full use of the circuit breakers' thermal capacity in motor protection applications.

Motor Circuit Protectors (Bulletin 140MG)

Another application-specific version of the MCCB is the motor circuit protector (MCP), a magnetic-trip-only version of the MCCB. These circuit breakers provide no overload protection and must be used with a controller to provide short-circuit current and overcurrent protection when they are applied in motor circuits. In the United States, the MCP is UL Listed in combination with a controller and together they form a combination starter. The advantage of this combination is the choice in overload protection that can be applied to the starter. Listed combinations can include mechanical and electronic overload relays, providing protection that is customized for specific applications. Allen-Bradley MCPs are available in high-magnetic-trip versions, allowing them to be used with high-efficiency motors, reducing the chance of nuisance tripping due to the characteristic high inrush currents that are associated with these motors.

Molded Case Switches (Bulletin 140G)

The function of a Molded Case Switch is to disconnect the downstream circuit in which it is installed. In the OFF position, the switch ensures sufficient electrical isolation to the circuit by using the same design theory as the MCCBs. Other types of devices applied as a disconnecting means may not have these same properties. The mechanical function of a molded case switch is the same as that of a circuit breaker with both an ON and OFF feature that is controlled with a toggle switch. It features the same overall dimensions and can accept the same electrical and mechanical accessories as an MCCB. Typical applications include local isolation at a motor installation, disconnecting means to isolate a single machine or group of machines, and bus-tie isolation.

Molded case switches are not designed to automatically break under short-circuit or overload conditions. For this reason, the circuit downstream from the switch must be protected with a coordinated device that protects against short-circuit currents. Bulletin 140G Molded Case Switches feature a self-protection magnetic override for high-fault conditions, so the device does not experience damage. This is not considered circuit protection.

Anatomy of Bulletin 140G Circuit Breakers

Bulletin 140G circuit breakers have five main physical components in a full assembly, shown in Figure 4. Each of the four device types we discussed has these five elements, except for the molded case switch, which does not have a trip unit because it does not provide circuit protection in this way. Breaking frames and trip units are both required to create a fully functional assembled circuit breaker, while terminal accessories, internal accessories, and external accessories are optional components that depend on your desired features and the needs of your electrical system.

Figure 4 - Circuit Breaker Anatomy and Terminology

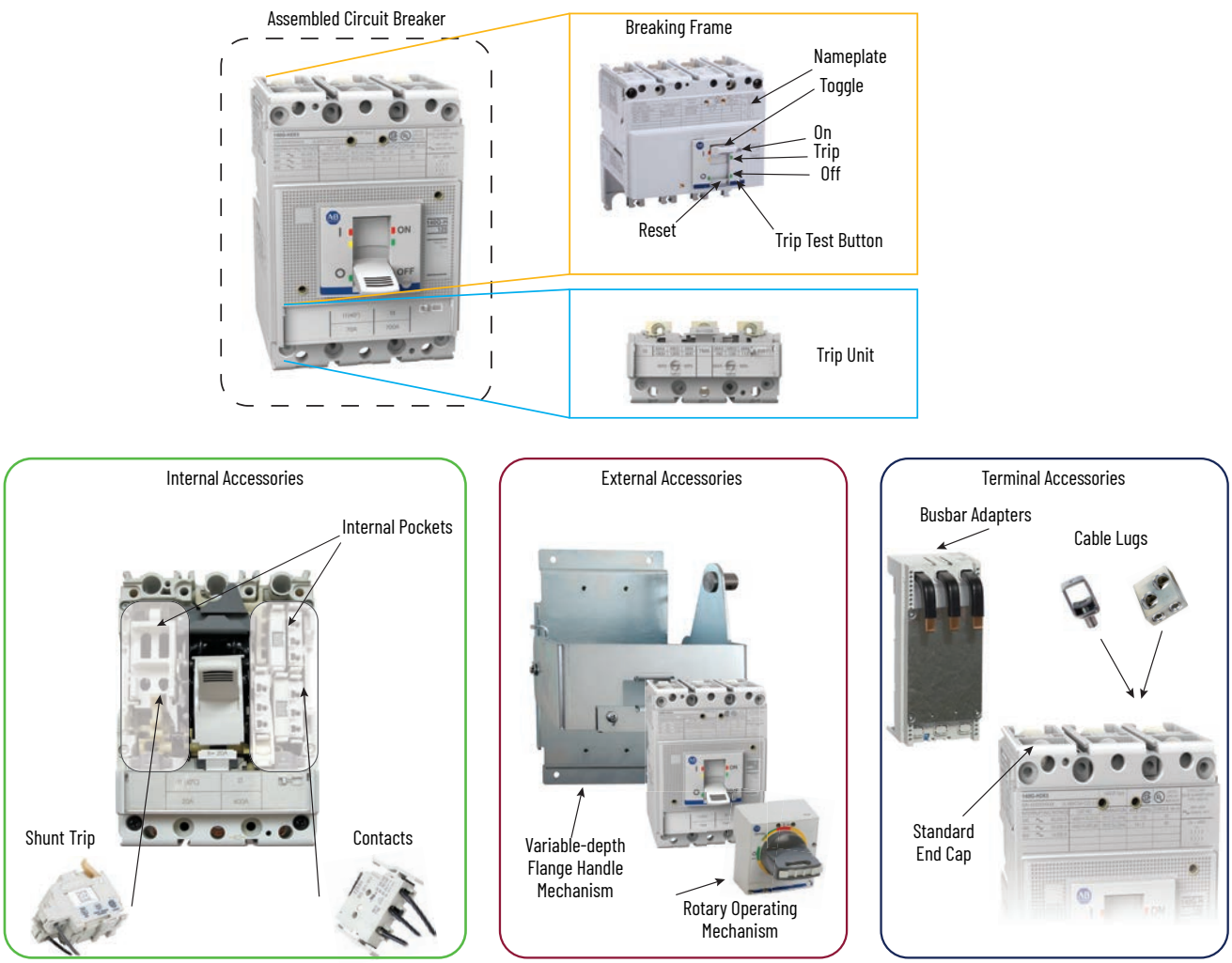

Each of these five components must be selected to fit with each other and the application. All products in the family are broadly arranged by a frame size (G, H, I, J, K, M, N, NS, and R), which has a specific mechanical size and electrical range. Most accessories are compatible with several frame sizes and can be user- or factory installed. Breaking frames and trip units are pre-assembled for G- and I-Frame devices.

Breaking Frame

The breaking frame makes up the physical majority of the assembled circuit breaker and contains the **switching contacts** and **arc chambers**. These switching contacts are the mechanism that allows the current flow through the breaker to be physically interrupted, either when the breaker is manually turned off or when the circuit protections automatically detect a condition that requires the breaker to open. The switching contacts are mechanically linked so that if one pole experiences an event that causes the breaker to open, all poles open together. The arc chambers surround each switching contact and include arc chutes and splitter plates that conduct the electricity away from the contacts and divide and dissipate an arc when the breaker is opened. An arc forms when electricity flows through the air gap between the contacts as they open. The electricity flow stops when the arc is successfully extinguished. Each breaking frame and trip unit also has venting chutes, which allow exhausting from the arc chambers during a trip under power. Each pole on the breaker is joined together by a **trip bar**, which enables the trip unit to activate the switching contacts.

Depending upon the design of the circuit breaker and intended short-circuit interruption capability, there are differences in the construction of the contact assemblies. Figure 5 shows the most commonly used contact assemblies.

Modern circuit breakers use the reverse loop design because it uses the magnetic forces that are created by current flowing in opposite direction to help open the contacts under short-circuit conditions. The amount of repulsive force that is generated is proportional to the value of the short-circuit current that the circuit breaker experiences. This allows faster interruption time as the short-circuit currents increase.

Figure 5 - Conventional Contact Design Compared to Reverse Loop Contact Design

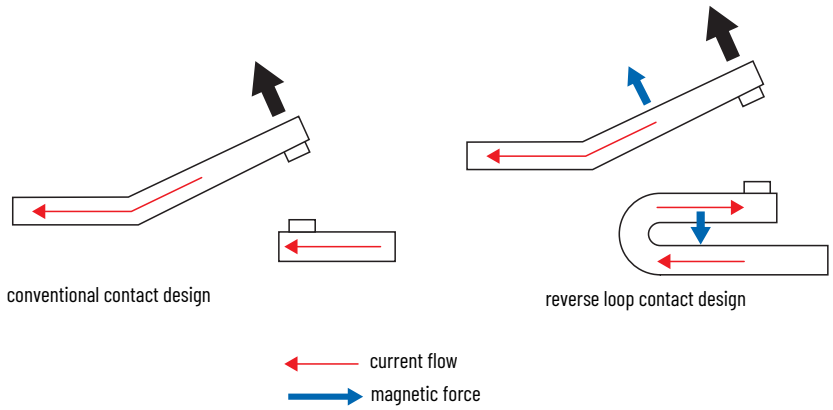

Each frame size is designed to be able to survive different high current conditions, referred to as **interrupting ratings** (see page 15). To safely handle these high current levels—sometimes up to 200,000 A— contact material and geometry must change, affecting physical size and cost of the frame and trip unit. Each frame size is a balance between the range of operating currents, the ability to handle fault currents common in industrial electrical systems, and the panel space footprint of the device. See Product Overview on page 29 for more information about features and accessories for each of the frame sizes.

The breaking frame also includes the top terminals for each pole, internal pockets for accessories, the toggle or integral spring operator assembly, informational nameplates, a trip test button, internal pole connections for the trip unit, and mounting holes to install the assembled breaker to a panel. The toggle shows the status of the circuit breaker and can be operated by hand. Figure 4 shows the toggle positions. The ON position is when the breaker contacts are closed, the OFF position is when the breaker contacts are open, TRIP shows when a breaker has been automatically opened by the trip test button or a trip condition, and the RESET position on the toggle allows the breaker to be closed again after a trip. The trip test button releases a mechanical latch that allows the contact assemblies to open and sets the toggle position to TRIP. On most breakers, this button is on the front face near the toggle.

In NS and R Frame devices, the high mechanical forces needed to manually open or close the contacts require an integral spring operator assembly to replace the toggle. The spring is charged by a ratcheting handle, activated with buttons on the face of the breaker, and must be recharged after every operation.

In the largest frames (N, NS, and R) a **terminal strip** made of labeled plug-in connections is at the top of the breaker. This replaces the wires in many accessories with a terminal connector that you can adapt to your desired control panel wiring.

You must select Breaking Frames for operational current range, interrupting capacity, let-through energy needs, energy system configuration for phases and poles, and continuous rating requirements. R frames must also be selected for integral door interlock. See Approximate Dimensions for mounting information and dimension drawings for breakers and accessory assemblies.

Trip Unit

The trip unit is the second required component of the assembled circuit breaker. It determines how the breaker behaves while automatically protecting a circuit. The trip unit simultaneously monitors for all circuit protections by analyzing the power on each line and calculating when to trip the breaker. Bulletin 140G devices offer several types of protection packages ranging from fixed, mechanical, thermal-magnetic units to heavily adjustable, electronic, multi-protection units. Figure 6 shows these two major trip unit types: the thermal-magnetic unit is identified by a simple interface, and the electronic unit shows various protections and configuration switches.

Figure 6 - Thermal-Magnetic and Electronic Trip Unit Interface Comparison

Thermal-magnetic Trip Unit

Electronic DIP Switch Trip Unit

Thermal-magnetic trip units use mechanical assemblies and material properties to determine when the current flow is too high. The thermal portion protects against thermal overcurrent conditions in which the slightly elevated current causes heat buildup in conductor elements due to each component's resistance. This thermal overcurrent detection is achieved by using the different heating rates in a bimetallic heater element similar to those found in overload relays. The current flow is broken as the element heats up and curls away. Once the element has cooled and the contact uncurls back into place, the breaker can be reset. The magnetic portion protects against short-circuit current conditions, which are high-current spikes that have many causes. Magnetic short-circuit detection is achieved by an assembly that uses magnetic forces to activate a lever, which releases the trip bar. This magnetic assembly is different from the switching contacts that are found in the breaking frame but uses the same principles on a smaller scale. Some thermal-magnetic trip units are adjustable to different thresholds by turning settings indicators on the front of the breaker. Thermal-magnetic trip units are used with MCCBs and MCPs (magnetic-only version).

Electronic trip units achieve the same circuit protections as thermal-magnetic units by using electronic sensors to detect current flow, processors to model the associated protection behavior, and solenoids to activate the trip bar and interrupt the current flow. Electronic trip units offer additional protections and wide adjustability of each protection to fully customize the behavior of the breaker to an application. Electronic units use small vertical switches (DIP switches) on the face of the breaker to configure threshold, time, and other settings for each protection. Electronic trip units are used with MCCBs, MPCBs, and MCPs. MPCBs use electronic trip units with a specific variation of the thermal overcurrent protection that is designed to replace the need for an overload unit. The protection is set based on the motor class and adjusts the current threshold and time response for the common needs of that motor class.

Circuit Protections and Device Self-Protections on page 19 discusses individual circuit protections in detail.

Table 2 and Table 3 illustrate the thermal-magnetic and electronic trip units that are available with the 140G family of MCCBs and their adjustment ranges. Each trip unit is tuned to a system's operating current by a rating or by a replaceable **rating plug**. These ratings adjust the trip unit from the frame's maximum to the desired operating current. For example, the G frame's maximum is 125 A (or 160 A for IEC applications), but can achieve a rating of 10 A by being paired with a G frame 10 A trip unit. Rated current is covered in more detail on page 16.

The trip unit also includes the bottom terminals for each pole, internal pole connections for the frame, wired connection ports for specific accessories, and mounting holes to install the assembled breaker to a panel.

Trip units must be selected for compatible frame size, protections package with adjustability or specialty function, compatible pole configuration, and rated current. For MPCBs and MCPs, trip units are pre-configured as assembled circuit breakers.

Table 2 - Trip Unit Adjustment Range Comparison, 10...225 A Devices

Frame Size	Type (1)	Rated Current [A](2)																																			
		10	15	16	20	24	25	30	32	35	40	45	50	56	60	63	64	70	77	80	87	90	100	105	110	112	120	122	125	140	150	157	160	175	200	210	225
G	T-M		X	X	X		X	X	X	X	X	X	X		X	X		X		X		X	X		X				X				X(3)				
H	T-M		X	X	X		X	X	X	X	X		X		X	X		X																			
															0																						
																0																					
																		0																			
																			0																		
																				0																	
																										0(4)											
	E	0																																			
						0																															
											0																										
																	0(4)																				
I	T-M														X	X		X		X		X	X		X				X		X		X	X	X		X
J	T-M						X	X		X	X	X	X		X	X		X																			
															0																						
																0																					
																		0																			
																			0																		
																				0																	
																							0														
																										0											
																												0									
																														0							
																																0					
																																		0			
	E			0																																	
						0																															
											0																										
																	0(4)																				
K	T-M																																			0	
	E																										0										
																																	0				

(1) T-M = Thermal-magnetic; E = Electronic
(2) X = Denotes fixed thermal and Fixed Magnetic; 0 = denotes adjustable thermal and adjustable magnetic
(3) IEC only. G-Frame is Adjustable Thermal.
(4) IEC only.

Table 3 - Trip Unit Adjustment Range Comparison, 240...1400 A Devices

Frame Size	Type (1)	Rated Current [A](2)																		
		240	250	252	280	300	320	350	400	420	480	560	600	630	800	900	1000	1200	1300	1400
J	T-M	0																		
	E	0																		
K	T-M	0																		
					0															
	E	0																		
		0																		
M	T-M									0										
												0								
	E	0																		
				0																
							0													
N/NS	E										0									
R	E														0					
																	0			
																		0		

(1) T-M = Thermal-magnetic; E = Electronic
(2) X = Denotes fixed thermal and Fixed Magnetic; 0 = denotes adjustable thermal and adjustable magnetic

Table 4 - Trip Unit Adjustment Range Comparison, 1500...3000 A Devices

Frame Size	Type (1)	Rated Current [A](2)													
		1500	1600	1700	1800	1900	2000	2100	2200	2400	2500	2600	2700	2800	2900	3000
R	E	0														
		0														
		0														

(1) T-M = Thermal-magnetic; E = Electronic
(2) X = Denotes fixed thermal and Fixed Magnetic; 0 = denotes adjustable thermal and adjustable magnetic

Internal Accessories

Circuit breakers contain internal pockets that are designed to accommodate internal accessories that can add data sharing and extra abilities to the device. These accessories are supplied with connection wires that are routed behind the cover and out the side of the breaker. In N, NS, and R Frame devices, the terminal strip on the breaking frame and a 3-pin quick connector replaces these connection wires. All frame sizes allow multiple internal accessories to be installed simultaneously.

Signaling contacts are micro-switches that sit on status levers inside the breaker and transmit a signal to a controller or panel light when the lever positions change. Most contacts are used for **auxiliary** (breaker ON or OFF), **alarm** (TRIP for any reason, including accessories), and **trip unit alarm** (TRIP from protection or trip button only) and are offered as multi-switch packages.

Table 5 - Auxiliary, Alarm, or Trip Unit Alarm Contact Change in Response to Device Status

Contact Location	Device Status	Contact Type		
		Auxiliary (AX)	Alarm (AL)	Trip Unit Alarm (TU AL)
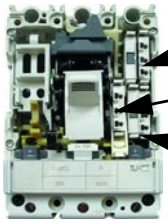	On	✓	–	–
	Trip (test or accessory)	✓	✓	–
	Trip (circuit protection by trip unit)	✓	✓	✓
	Off	–	–	–

Other internal accessories are also used for circuit protections. **Shunt trip** and **undervoltage release** units are activated by controller signals or panel pushbuttons and use solenoids to make contact with the trip bar and cause the breaker to trip. Shunt trip is activated when a signal is sent, and undervoltage release is activated when a steady signal is removed (common for many safety applications). Shunt trip and undervoltage release units are both additionally applicable as circuit protections for undervoltage and overvoltage conditions and are available for voltages ranging from 12V DC to 525V AC. **Shunt Close** units are used with NS- and R-Frame breakers to remotely close the breaker (to the ON position). **Trip Reset** is used with NS- and R-Frame breakers to remotely recover from a TRIP state.

Spring charging motors use an electric motor to recharge the integral springs of the NS and R frame breakers. A common application of accessories for integral spring operation breakers (NS and R Frames) uses a combination of accessories to initiate breaker status change and recharge the springs with an electric motor. Several of these components are required for full function: spring charging motor, shunt close, and shunt trip. For systems where a manual reset is not desired when the breaker is tripped for any reason, the trip reset is recommended. Optional accessories for this application include the spring charged contact, ready-to-close contact, trip unit alarm contact, and mechanical operations counter. This system is often referred to as **remote operation** and can be driven either by PLC signals or local push button control.

Mechanical counters are available for NS- and R-Frame devices, and record of the number of operation cycles of the breaker when it is installed with the spring charging motor.

You can order Bulletin 140G devices with factory-installed internal accessories. See page 79 for more information.

External Accessories

External accessories serve many purposes, including additional circuit protections, a variety of mechanical assemblies to operate the circuit breaker, insulation and guarding components, locking components, mounting adapters, and troubleshooting accessories.

Assembled circuit breakers and breaking frames are supplied by default with the following external and terminal accessories: end caps, back insulators, phase barriers, mounting hardware, and both side and front covers. Replacement Parts on page 96 lists the catalog numbers to order replacements for these components. The Replacement Parts section also lists common replacement parts for flexible cable operators and R frame factory-installed configurations.

Additional Circuit Protections

Externally installed circuit protections include earth leakage protectors, external neutral sensors, rating plugs, and maintenance mode connections. **Earth leakage protectors** attach to the bottom of a circuit breaker and analyze the total current flow across all three lines to check for power leaking out from a fault. They also allow the breaker to protect equipment at a 30 mA level. Earth protectors feature terminals at the bottom to accommodate the full variety of Bulletin 140G terminal accessories. **External neutral sensors** allow a 3-pole breaker to analyze a 4th neutral line for the return current flow. See page 16 for more information. **Rating Plugs** change the rated current for a device. See page 16 for more information on rated current. **Maintenance Mode Connectors** enable signaling to operate maintenance mode on enabled devices.

Device Operation Options

Operator assemblies and accessories are commonly used to let personnel actuate the circuit breaker between states without opening an enclosure and being exposed to potentially dangerous power levels. Table 6 compares the available options for device operation.

Table 6 - Molded Case Circuit Breaker Operation Comparison

Operator Type	Photo	Accessory	Accessory Purpose
No Operator		None	• Use toggle on G/H/I/J/K/M/N frames to manually operate device • Can be mounted through enclosure door when installed with escutcheon plate
		None	• Use lever and buttons on NS/R frames to manually operate device • Can be mounted through enclosure door when installed with escutcheon plate
Rotary Operators		Variable-depth Rotary Operators (RVM/NVM/RMX)	• Control the device with manual rotary handle that is attached to outside of enclosure door • Handle is connected to device by shaft modified to enclosure depth and rotary mechanism • NFPA options available
		Direct Rotary Operators (RMB/RMY)	• Control the device with manual rotary handle connected to face of device • Can be mounted through enclosure door when installed with included rotary escutcheon plate
		Through-the-door Rotary Handle (RTM)	• Control the device with manual rotary handle connected to face of device • Controls the MCCB with the panel door open or closed • No secondary handle required for NFPA 79 compliance
Flange-mounted Handle Operators	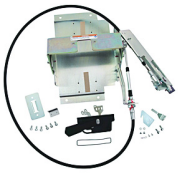	Flexible Cable Operators (FCX)	• Control the device with manual vertical flange handle while the device is installed almost anywhere in enclosure
		Bulletin 1494V Variable-Depth Flange Operator (1494V-M)	• Control the device with manual vertical flange handle while the device is installed directly behind flange of enclosure
Remote Control Operators		Stored Energy Motor Operator (EOP)	• Control the device with Remote Operation signals from push button or PLC in one device on the face of the breaker • Control toggle device with manual lever and buttons • Can be mounted through enclosure door when installed with included motor escutcheon plate
		Spring Charging Motor (SCM) for Remote Operation System	• Enable Remote Operation System on N/NS/R frames • See Table 128 for details; system requires multiple internal components

Rotary operators change vertical toggle motion into rotary turning of a handle and are available in direct-mounting and variable-depth varieties to accommodate enclosure styles and needs. Some rotary operators are offered with NFPA 79-compliant handles, which have a secondary handle for deliberate operation of the breaker when the enclosure is open. **Flexible cable operators** use a flexible cable to transfer the toggle motion to a vertical-travel handle that is mounted outside the enclosure (often on an enclosure flange), allowing you to install the connected breaker anywhere on the panel. All handles are available in a selection of materials and finishes that are designed to withstand a variety of industrial environmental conditions. **Stored energy motor operators** are a single device that performs three functions: provides a closing spring similar to the NS- and R-Frame, which uses a lever to charge a spring mechanism and buttons to drive the toggle; provides signal input to electronically control the opening and closing of the breaker, which uses an electric motor to charge the spring mechanism; and provides a padlock to lock the whole device and breaker into the OFF position.

Early-Make and **Early-Break** signal contacts are available for use with Direct Rotary Handles and Variable-Depth Rotary Operators to prevent nuisance undervoltage trips while operating the handles or transient voltage damage.

Insulation and Guarding Components

A variety of covers and seals are offered for connection insulation and breaker guarding. We offer **covers**, including front covers, side covers, and standard, high, and low terminal covers, that protect personnel and control wiring from power connections. **Phase barriers** and **terminal covers** also insulate line connections and prevent dangerous arcing conditions between poles of the breaker. **IP30 escutcheon frames** and **IP54 protective covers** are available to protect through-the-door installations. **Sealable screws** are available to prevent tampering with terminal covers.

Locking Components

Locking accessories include **padlock adapters** that allow a breaker to be mechanically fixed in an OFF position, and **door interlocks**, which allow a breaker to trip when an enclosure is opened to protect personnel from an enclosure's power supply.

Mounting Adapters

Bulletin 140G Circuit Breakers are panel mounted (as opposed to withdrawable styles) and can be installed to a panel either by the 4 mounting holes in the assembled breaker or by using mounting adapters. Bulletin 140G adapters include **EZ-plates**, which allow a breaker to be mounted by two 1/4 in.-20 bolts, and **DIN Rail adapters**, which allow a breaker to be easily attached to two sizes of DIN Rail. See page 27 for more information. **Bulletin 141A Busbar Mounting Adapters**, which allow terminal connection and panel mounting in one accessory, are also available. See page 95 for more information.

Troubleshooting Accessories

You can use special powered accessories to aid in troubleshooting. An **external battery unit** and a **trip test unit** allow electronic trip units to be powered when not in use under load, as well as evaluated for trip conditions, error indicators, and proper accessories installation (for those that would be affected by a breaker trip).

Phase Barriers and Terminal Covers

Phase barriers and terminal covers let you increase the insulation characteristics between the phases at the connections. They are mounted from the front, even with the circuit breaker already installed. Medium and high phase barriers and terminal covers provide additional electrical clearance between each phase when special connections extend past the circuit breaker housing, like extended and spread terminals or ring lug collars on cables.

Terminal Connection Accessories

Terminal connection accessories convert the standard line- and load-side terminals of the breaker to accommodate a variety of cable terminations and busbars. Each breaker comes with an **end cap kit** that includes a bolt and a nut that fixes in place to the breaker's housing. The 140G product line includes, as standard, the capability to terminate wiring using customer furnished crimp-on ring lug (ring tongue) or forked lug termination. Using Allen-Bradley terminal lugs in applications that follow UL guidelines for panel short-circuit current rating (SCCR) permits the termination to be rated at the SCCR level of the circuit breaker. This rating may allow a higher SCCR than may be available using a separate power distribution block.

Terminal lugs are available in copper (Cu) and copper-aluminum (CuAl) construction and include saddle-clamp-style lugs, machined block lugs, and multi-terminal lugs. These accessories bolt on to the front terminals on the breaker (requires the end caps) and allow cables up to 750 MCM to be attached to the breaker. **Multi-terminal lugs** allow up to 6 wires to be attached to each pole of the breaker.

Most terminal lugs include control tap screws for external voltage or current sensing purposes. For frames N, NS, and R, **vertical** and **rear terminals** are available, which are designed for busbar systems. For frames G, H, J, and K, **Bulletin 141A busbar adapters** allow mounting and electrical connection of the breaker to a busbar system.

Details on conductor sizing are discussed on page 26. Each breaking frame's installation instructions contain details on allowable connections to front terminals; details on terminal lug connections are contained in each terminal accessory's installation instructions. See Additional Resources for more information.

Factory-Installed Options

Many components are available as factory-installed options. These options offer a faster installation time and streamlined accessory selection for certain common functions. These options include:

- Assembly of breaking frame and trip unit (for products that are available separately)
- Remote operation via combined use of spring charging motor, shunt trip, shunt close, trip reset, and mechanical counter
- Shunt trip and undervoltage release for controls or protections
- Variety of contact kits, including auxiliary, alarm, and trip unit alarm contacts
- Terminal connections with saddle-clamp style lugs or busbar adapter

Properties of a Circuit Breaker

In addition to the five main physical components of an assembled 140G circuit breaker, there are several non-physical properties they share. Each property is a critical function of the breaker, which must be identified and specified to select the right breaker for the application.

Definitions

Threshold current: the root mean squared (rms) symmetrical prospective at the highest interrupting capacity of the current limiting range, where:

- the peak current let-through in each phase is less than the peak of that symmetrical prospective current, and
- the I^2t in each phase is less than the I^2t of a 1/2 cycle wave of the symmetrical current

Interrupting rating: the highest current at rated voltage that a device is intended to interrupt under standard test conditions.

Current Definitions

Throughout this publication, we refer to several types of current. Table 7 explains these types of current and their abbreviations.

Table 7 - Current Definitions

Abbreviation	Current Type	Description
I_n	Rated current	The value of current that characterizes the protection release that is installed on board the circuit breaker and determines, based on the settings available for the release, the protective characteristic of the circuit breaker itself.
I_c	Breaking capacity	The value of current that a circuit breaker is able to interrupt without being destroyed or causing an electric arc with unacceptable duration.
I_{cu}	Ultimate breaking capacity	The maximum short-circuit current that a circuit breaker can break without damage.
I_{cs}	Service breaking capacity	The maximum short-circuit current that a circuit breaker can break three times and still resume normal service. Expressed as a percentage ratio of I_{cu}.
I_{cm}	Rated short-circuit making capacity	The highest instantaneous value of current that the circuit breaker can establish at rated voltage in specified conditions.
I_{cw}	Rated short-time withstand current	The value of the current the equipment can withstand for a specified time without damage occurring
I_p	Peak current	The maximum (or peak) instantaneous current that is allowed to pass during a specific short-circuit event. The value is determined from either a table as shown above or evaluated from an SCCR table based upon the available short-circuit current at a specific voltage.
I_{rms}	Short-circuit current rating	The maximum rms prospective (available) current that a device can interrupt. The rating is expressed in Amperes and volts.
I_s	Selectivity limit current	The current co-ordinate of the intersection between the total time-current characteristic of the protective device on the load side and the tripping time-current characteristic of the other protective device. See publication 140G-TD050 for more information about circuit breaker selectivity.
I^2t	Amperes squared seconds	An expression related to the energy that is let through for a specific short circuit event. With respect to circuit breakers, the I^2t [A^2s] is expressed for the current flow between the initiation of the fault current and the clearing of the circuit.

Interrupting Ratings (Breaking Capacity; I_c or I_{cu})

The interrupting rating, or breaking capacity, of a breaker refers to the maximum amount of fault current that a specific breaker can safely interrupt without damage to itself. Fault current is the maximum amount of current a system can send downstream to the breaker during a failure like a short circuit or ground fault, typically measured in kiloamperes (kA). The maximum amount of fault current that is supplied by a system can be calculated at any point in that system. The interrupting rating of the breaker must be greater than or equal to the amount of fault current that can be delivered at the point in the system in which the breaker is applied. Breakers and other circuit interrupting devices can be arranged in an electrical system to effectively step down the fault current to appropriately limit the danger to downstream devices.

A breaker's interrupting rating always decreases as the voltage increases. For example, a Bulletin 140G J-Frame circuit breaker with a high interrupting capacity of 100 kA at 480V can only provide 20 kA capacity at 690V. Interrupting rating is one of the most critical factors in the breaker selection process. Figure 7 shows a closeup of this rating information on a Bulletin 140G breaker. Ratings for UL (which uses the term interrupting rating) are shown on the front nameplate, while ratings for IEC (which uses the term breaking capacity) are shown on a label on the left side of the breaker.

Figure 7 - Interrupting Rating Nameplate Information

Rated Current (I_n)

Each breaker is tuned to a rated current, which is the expected operating current of the device and the reference point that circuit protections are based on.

The operating current is determined by the needs of the application, and each breaker can be operated at as low as 20% of the rated current of the device. Each protection for circuit current is defined by a threshold in comparison to the rated current, I_n. The protection thresholds have settings as a multiple of the rated current. See page 19 for more information.

The breaking frame defines the range the breaker can operate on, and the trip unit defines the specific rated current the breaker will be tuned to within that range. In larger frames, including N, NS, and R, the rating is instead determined by a rating plug, which is a component that fits into the front of the trip unit and lowers the trip unit's rating to the desired operating current. In these trip units, the rating plug that comes with the unit can be replaced with a lower-value rating plug. To achieve a higher value, you must select a different trip unit with a higher base rated current. You cannot change rating plugs in MCPs.

The rated current of each trip unit is identified by the labeling tab at the top of the trip unit (marked with In = ###A), which shows through a small window on the assembled circuit breaker just below the toggle. On M-, N-, NS-, and R-Frame devices, the rating is shown in text on the front center of the trip unit or on the rating plug on the left side of the front of the trip unit. Figure 8 shows an example of the rating tab.

Figure 8 - Trip Unit Rated Current Information

Neutral Pole and Protection

Breakers are available in 3- and 4-pole configurations. The 4-pole units come with an integral neutral pole, and many of the 3-pole devices can be applied to a 4-pole system by using an external neutral sensor accessory. Using a 4-pole device has the benefit of the neutral pole isolated within the MCCB housing and utilizes a switching contact with arc chambers to interrupt current flow on the line. Proper selection of a neutral pole solution is dependent on the power supply and electrical system design.

Neutral line protection is the addition of the neutral current sensor data to the other protections enabled on the device. Neutral settings are available as a percentage of the rated current and are used as a threshold modifier for the protections. For example, if a protection is

enabled at 1 times (100%) the rated current and neutral is at 50%, then the trip unit will monitor the neutral current sensor for that protection on that pole at 0.5 times (50%) the rated current. This is simultaneously true for all enabled protections, and their protection timings are the same as for the other poles. For 4 pole thermal-magnetic trip units, neutral is offered at 100%, and for electronic trip units neutral can be adjusted from 50...200%. Neutral protection can also be turned off, where the neutral pole is not monitored but will be interrupted as a 4th pole when the breaker is opened for any reason.

Figure 9 - Neutral Pole Configuration

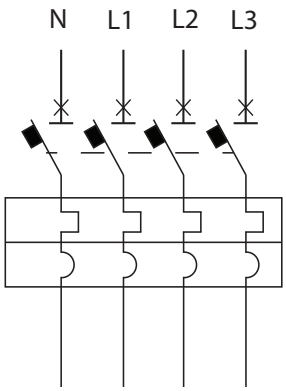

For all 4-pole 140G MCCB and Molded Case Switches, the neutral is the left outside pole.

Opening Time

The opening time of the circuit breaker is the time required to fully interrupt the current flow on all poles. This is also referred to as clearing time or break time. The protection threshold and time determine when a trip is triggered by the trip unit. Once the trip is triggered, the opening time includes the activation of the trip bar, the motion of the switching contacts from closed to open, the redirection of the electricity through the arc chutes and splitters, and the extinguishing of the arc. The opening time for all Bulletin 140G devices is 30 ms, or half of one cycle at 60 Hz.

During the opening time, the breaker allows energy through the poles while the arc is still active. This energy is measured and documented in two forms: **peak let-through current** and **total let-through energy**. This energy can damage highly sensitive downstream equipment and should be considered when you select a device. Trip and Let-through Curves on page 140 contains information for each frame's let-through data.

80% and 100% Continuous Rated Breakers

All 140G Molded Case Circuit Breakers are rated for 80% continuous load unless they are marked for 100% loads. The NEC requires that only 100% rated continuous loads be marked special with the load designation. In all general applications, the unmarked circuit breaker is to be applied at no more than 80% continuous load of its rated current (I_n). Typically 100% rated current MCCBs are devices with electronic trip units. Visit rok.auto for specific devices.

At higher rated currents, separate trip units are required to achieve either 80% or 100% continuous rating. For N-, NS-, and R-Frame devices, the trip unit and frame must both be selected according to the percent rating required for the end application.

Ingress Protection

The Ingress Protection rating (IP rating) is an international standard (EN/IEC 60529) that is used to rate the degree of protection or sealing effectiveness in electrical enclosures against intrusion of objects, water, dust, or accidental contact.

Table 8 indicates the degrees of protection against intrusion and accidental contact according to IEC 60529.

Table 8 - Ingress Protection Rating

Location	Terminal Covers		
	None	High(1)	Low
A	–	–	
B	IP20(2)	IP40	IP40
C	–	IP40(3)	IP30(3)

(1) High terminal covers have a height of 60 mm (2.36 in.) and are designated with a suffix "H" in the catalog number (140G-G-TC3**H**)
(2) G through M frames.
(3) After correct installation.

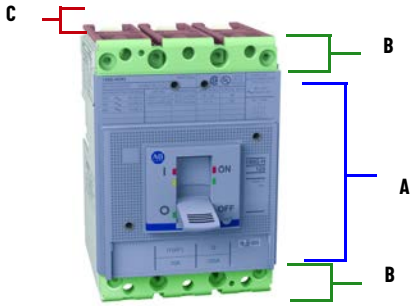

Circuit Protections and Device Self-Protections

Each breaker's device type or trip unit defines the protections for the circuit. All four device types also contain device self-protections, which are not considered circuit protections. Each of these protections perform together to define each breaker's **trip curve**, which is a time-current chart of the adjustable settings and cumulative effect of the protections on the response of the breaker to excess current conditions.

Figure 10 shows a generic version of a trip curve. Each threshold ($I_{\#}$) and time ($t_{\#}$) adjustment on the protections lets you tune the curve to respond to or ignore specific conditions in the circuit, depending on the application. Each current protection threshold is expressed as a multiple of the nominal current, I_n, unless otherwise noted. The breaker has no response to the left of the curve and when the time and current level of an event aligns with the tuned curve, a device responds within the published tolerance.

Figure 10 - Generic trip curve with LSIG protections parameters

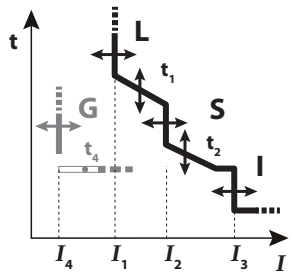

Each trip unit monitors all poles and all protections simultaneously, including a neutral pole if using a 4-pole breaker or external neutral sensor. Table 9 compares device types and protections.

Table 9 - Comparison of Protections and Device Types

Protection Type		MCCB		MCP		MPCB	Molded Case Switch
		Thermal-magnetic	Electronic	Thermal-magnetic	Electronic	Electronic	
Current-based circuit protections	L	✓	✓	–	–	✓	–
	S	–	✓	–	–	–	–
	I	✓	✓	✓	✓	✓	–
	G	–	Optional	–	–	–	–
	N	Optional	Optional	Optional	Optional	Optional	–
	U	–	–	–	–	✓	–
Device self protections	Magnetic Override	✓	✓	✓	✓	✓	✓

Each protection's segment of the curve features a slope that defines the protection's response: t = k, where the response is a constant trip time and is shown as a right angle on the chart, or $t = k/I^2$, where the response follows this formula, resulting in a constant let-through energy and creates an angled slope on the chart. Each trip curve for thermal-magnetic devices displays differences in hot trip, where the device has recently experienced a thermal overload condition and is physically still warm from the event, and cold trip, when it has not experienced this condition. Hot trip conditions cause the breaker to trip faster, and electronic devices feature a calculation (referred to as **thermal memory**) to simulate this response and protect a circuit from repeat thermal overload conditions. When a trip is initiated and the breaker is interrupting the circuit, a certain amount of energy is allowed through- these details are documented in peak let-through current and total let-through energy curves. Trip and Let-through Curves on page 140 contains additional details on reading, interpretation, and tolerances for trip curves and let-through curves.

Table 10 compares circuit protections for current; Table 11 lists device self protections.

Table 10 - Current-based Circuit Protections

Protection Code	Name	Function	Parameters and Limits
L	Long (thermal)(1)	Long overcurrent condition (current experienced is slightly higher than the nominal current of the system) where thermal rise due to resistance of the system observed in the conductors and connections is undesirable and may cause damage to the insulation and some current-sensitive circuit components. Generally active 125...1000% of nominal current during an overcurrent event.	• Threshold: I_1; adjust 0.4...1.0 x I_n • Time: t_1; adjust 3...144 s • Shape: t = k/I^2; 3 additional IEC profiles for N/NS/R LCD trip unit If S Protection is enabled, I_1 threshold must be less than I_2
S	Short	Short short-circuit condition (current experienced is moderately higher than the nominal current of the system) where undesirable low short-circuit current faults may occur, but motor inrush currents may need to be allowed through the breaker to avoid nuisance trips. Generally active 125...10,000% of nominal current during an overcurrent event. Short protection can have a sloped line for t = k/I^2 behavior and a flat line for t = k behavior.	• Threshold: I_2; Off (2), adjust 0.6...10 x I_n • Time: t_2; adjust 0.05...0.8s • Shape: t = k/I^2; t = k
I	Instant (magnetic)	Instantaneous short-circuit condition (current experienced is significantly higher than the nominal current of the system) where high short-circuit current faults can cause damage to downstream equipment. Generally active 500...15,000% of nominal current during an overcurrent event.	• Threshold: I_3; Off (2), adjust 1...15 x I_n • Time: none • Shape: t = k
G	Ground	Ground current condition where ground/earth fault current is detected across the sum of all phases and can cause equipment damage. Generally active 20...100% of nominal current during an overcurrent event.	• Threshold: I_4; Off (2), adjust 0.2...1.0 x I_n • Time: t_4; adjust 0.1...0.8s • Shape: t = k/I^2; t = k • Limits: – H/J Frames: disabled at 2 x I_n in favor of I Protection response time – K/M/N/NS/R Frames: disabled at 4/6/8x I_n in favor of I Protection response time
N	Neutral	Neutral protection allows the addition of a 4th pole to the analysis of the L, S, and I protections at the specified percentage of the nominal current. See page 16.	Options: • Thermal-magnetic: Off, 100% I_n • Electronic: Off, adjust 50...200% I_n • Time, Shape, Limits: see other enabled protections and settings
U	Imbalance	Imbalance of Current condition on the 3 poles of the device, where unbalanced loads or uneven power draw can damage downstream equipment or indicate a fault. Protection fixed at 50% of long protection threshold.	• Options: Off, 50% of I_1 • Time: 2s • Shape: t = k

(1) MPCBs follow behavior specific to motor class rating (##E) which corresponds to a predetermined trip time. (3E= 3 s, 5E= 5 s, 10E= 10 s, 20E= 20 s at 7.2 x I_n)
(2) Off option for protection available on electronic trip units only.

Table 11 - Device Self Protections

Protection Name	Function	Parameters and Limits
Magnetic Override; Hardware Override	High fault current condition where current experienced may cause damage to downstream equipment. Override is below interrupting capacity of breaking frame (maximum value breaker can withstand) to protect breaker from damage over time. Ranges from 10...200 kA.	Threshold and Time: • MCCB/MCP/MPCB: see override region window in device trip curve • Molded Case Switch: see magnetic override values that are listed in product selection tables

For information about maintenance mode, see page 28.

Circuit Breaker Applications

Circuit breaker selection and terminology is very specific to the regional governing standards of the end application. Some applications may require derating of the circuit breaker for proper function.

Standards Compliance and Certifications

To provide customers with third-party assurance that Allen-Bradley MCCBs meet industry standards, Bulletin 140G/MG devices comply with various global standards. The Bulletin 140G MCCB and 140MG MCP and MPCBs comply with UL, CSA, and IEC standards and are UL Listed, CSA Certified, and CCC Certified.

MCCBs comply with certification requirements from other agencies. The certification of these products is an ongoing process and additional ratings and certifications are continually being pursued. For specific information about declarations of conformity, certificates, and other certification details, see our product certifications website, rok.auto/certifications, or contact your local Rockwell Automation sales office or Allen-Bradley distributor.

Reverse-fed Circuit Breaker

Due to physical equipment arrangements in panelboards, switchboards, and industrial control panels, it is often desirable to reverse feed a molded case circuit breaker. Traditionally, the line that feeds the circuit is connected to the top and the load that draws the current is connected to the bottom. Reverse feeding is achieved by trading the line and load connections on the breaker. For this type of application, the circuit breaker must be tested and listed accordingly. All Bulletin 140G circuit breakers can be reverse fed. When reverse feeding these devices, you must properly identify the line and load side terminals.

Figure 11 - Reverse Feed Configuration

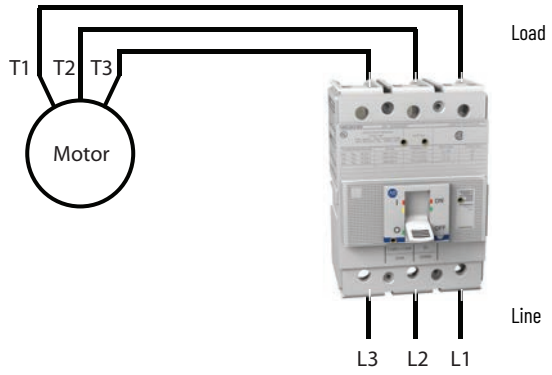

Table 12 - Maximum Voltage for Reverse-fed Circuit Breakers

Bulletin 140G, 140MG Frame Size	Maximum Voltage [V AC](1)	
	UL/CSA	IEC
G	600Y/347	690
H	480	480
I	600Y/347	690
J	600	600
K	600	690

Bulletin 140G, 140MG Frame Size	Maximum Voltage [V AC](1)	
	UL/CSA	IEC
M	600	690
N, NS	600	690
R	600	690
–	–	–
–	–	–

(1) NEC Article 404.7 states "Where these switch or circuit breaker handles are operated vertically rather than rotationally or horizontally, the up position of the handle shall be the (on) position." Refer to applicable codes and standards for specific application requirements

Applying Molded Case Circuit Breakers to North American Guidelines

MCCBs are most commonly used as either feeder breakers or as a single circuit breaker where disconnecting, short-circuit, and thermal protection functionality is required. When selecting an MCCB, you must consider the following items.

- Application voltage
- Available short-circuit current
- Amperage of the load or wiring to be protected

You must consider local code requirements; these requirements can ultimately affect the type and functionality of the MCCB that you select.

Molded Case Circuit Breakers

- Magnetic and thermal trip currents can be fixed or adjustable
- Must be sized per NEC/CEC rules
- Can be used for motor circuits, but 140MG (MCP) is first choice
- Motor Current (thermal rating)
  - ≤ 250% motor full load amperes (FLA)
  - ≤ 300% for motors ≤ 100 A if the circuit trips on start
  - ≤ 400% for motors ≥ 100 A if the circuit breaker trips on start
- Magnetic trip current is generally set at 1000% (10x) of circuit breaker thermal ratings
- Can be UL Listed as part of UL 508/UL 60947-4-1
- Can also be used for motor control circuit transformers; Bulletin 1489 miniature circuit breakers (MCBs) are a more appropriate choice

Motor Protection Circuit Breakers

Motor Protection Circuit Breakers are relatively new to the North American market. These devices are considered motor protection circuit breakers (MPCBs) outside of North America. Within North America, they are defined as manual Type E self-protecting combination motor controllers.

- Sized at 100% of the motor full-load current (FLA)
- Motor current setting is adjustable (thermal rating)
- IEC and UL/CSA calibration requirements require overload to trip at 120% and 125% FLA
- Motor is able to run into the Service Factor when set at 100% of the motor current
- Magnetic Trip Current setting is adjustable (magnetic rating)
- Adjustable at 1300% (13x) highest motor current setting on circuit breaker
- Higher Magnetic Trip Current settings are available if circuit breaker trips on start (140M-C2T-...)
- Example of an MPCB using 140M-C2E-C10:
  - Motor Current is adjustable from 6.3...10 A
  - Set at 100% FLA for proper motor protection
  - Magnetic Trip Current is fixed at 130 A; this is where circuit breaker begins to trip in a “short-circuit” condition
- NEC/CEC (Canadian Electrical Code) do not specifically recognize this classification of circuit breaker and, therefore, do not describe how to size them (for example,100% FLA sizing)

Motor Circuit Protectors

Motor circuit protectors (MCPs) are the most popular choice for motor circuits in the North American market. they have been used in combination starters and Motor Control Center unit inserts (buckets) for many years

- Motor current setting (thermal) is not specified by NEC/CEC
- MCPs are magnetic only
- Thermal capability should be ≥ motor FLA and ≤ overload relay setting
- Motor overload protection must be provided separately
- MCPs are UL Recognized
- Must be tested and listed with specific contactors and overloads
- UL Listing is obtained as part of UL 508/UL 60947-4-1
- Magnetic trip current is adjustable
- Adjustability is required by UL489 standard
- Must be sized per NEC/CEC rules
  - ≤ 800% motor FLA for standard efficiency motors
  - ≤ 1300% motor FLA allowed if motor does not start
  - ≤ 1100% motor FLA for high efficiency motors
  - ≤ 1700% motor FLA allowed if motor does not start
- Provide choice in overload protection

Selecting a Circuit Breaker When Application Follows U.S. Guidelines

Selecting a breaker for use in an industrial control panel requires focus on the MCCB for use as a feeder and as a branch circuit protective device.

Selecting The MCCB for Use as The Main Disconnect or Feeder

A typical industrial control panel is a feeder circuit as defined by the NEC, where a feeder is composed of the wires between the service entrance of the panel or line side of the MCCB and the line side of the branch protective devices.

Motor control is involved in many industrial control applications. The application must then follow Article 430 of the NEC, which states that breakers for feeders having mixed loads should have ratings suitable for carrying the heating loads, plus the capacity required by the motor loads. Examples of mixed loads include heating (lighting and heat appliances) and motors.

For motor loads, NEC Article 430 states that breakers for motor feeders shall have a rating not greater than the sum of the highest breaker rating of any of its branches and the full-load currents of all other motors that are served by the feeder.

Feeder Breaker Thermal Rating Selection Example

This assumes that the circuit breaker selected has a voltage rating equal or greater than the application and that the interrupting rating is equal or greater to the available short-circuit current. The panel contains a main feeder breaker supply with three motor branch circuits.

In our application, the feeder is supplying a 3-motor system at a voltage of 480V.

- Motor 1 is 10 Hp. Current value from Table 430.250 of the NEC is 14 A.
- Motor 2 is 5 Hp. Current value from Table 430.250 of the NEC is 7.6 A.
- Motor 1 is 5 Hp. Current value from Table 430.250 of the NEC is 7.6 A.

Calculation of panel wiring includes:

- For single motors: Per [430.22], size motor branch circuit conductors no smaller than 125 percent of the motor FLC rating listed in Table 430.147 or 430.148 (Figure 430-4). Size the branch circuit short-circuit and ground-fault protection device per 240.6(A) and 430.52(C)(1) Ex. 1.

- For multiple motors. Per [430.24], size multiple motor conductors as follows. First, multiply the full-load current rating of the highest-load motor by 1.25. Then, add up the full-load current ratings of all other motors in the group. Add these two numbers. That's your motor load for calculating ampacity. Add any other loads on that conductor, to calculate total conductor ampacity.

Current Calculation is:

- Motor 1 (14 A x 1.25) 17.5 A
- Motor 2 7.6 A
- Motor 3 7.6 A
- Total 32.7 A

Because the total load comes to 32.7 A and there is not a commercially available breaker available for 32.7 A, the NEC lets you use the next largest standard-sized breaker. Therefore, you could select a 35 A MCCB to protect this control panel.

Each motor branch also needs protection.

Thermal-magnetic Circuit Breakers Used as Branch Short-circuit Devices

You can also use an MCCB as a branch protective device for a motor load. While we show the calculation for applying an MCCB in this manner, the MCP and MPCB are better suited for this application. After the calculation for sizing is completed, it should be apparent that, even though this is technically correct, in some cases, the motor protection and wire protection can be less than ideal.

Per NEC Article 430.52(B), the motor branch circuit short-circuit and ground fault device shall be capable of carrying the starting current of the motor. Further, 430.52(C) indicates that the protective device must have a rating or setting not exceeding the value that is calculated according to the values given in Table 430.52. In the case of an inverse time MCCB, such as the 140G, the calculation for the maximum setting or rating of the protective device is 250% of the motor being protected. Figure 3 on page 5 shows an example of this type of configuration.

EXAMPLE:

An MCCB is being used to protect a branch motor circuit with a 10 Hp 460V motor. Using Table 430.250 of the NEC, a value of FLC of 14 A is supplied for this motor.

Calculating the maximum branch circuit protective device rating or setting is: 14 A x 250% = 35 A

Therefore, the maximum size MCCB that could be used in this example is 35 A. This is the maximum rating and therefore smaller devices could be selected for this application. A point to consider is that generally MCCBs have a magnetic trip of approximately 10x the rating of the MCCB. When starting, motors usually exhibit an inrush characteristic of 6...10 times the full load rating of the motor, depending on the type of motor being used. In this case, the circuit breaker trip point is approximately 350 A and the motor starting current of locked rotor current is approximately 140 A if a 10x ratio of running to starting current is assumed. You could select a smaller breaker without concern for nuisance tripping. In that case, there may be more concern about the thermal protection provided by the circuit breaker being based on a 35 A breaker with only a 14 A load. The motor and the wiring may not be adequately protected if larger wire isn't selected or if a motor overload relay is not used.

MCCB Application and Sizing

Bulletin 140G MCCBs are traditionally used to protect branch and feeder circuits in industrial control applications. In the role of a feeder circuit breaker, the MCCB provides isolation and short-circuit protection for the panel and thermal protection for the feeder wires. As a branch circuit breaker, an MCCB provides the same protection for the branch wires in the panel. For illustrative purposes, the feeder is shown at the wiring from the load side of the main or feeder MCCB to the line connection of the branch short-circuit protective devices to which the feeder is supplying power.

The following example is a generic interpretation of the US National Electrical Code (NEC), and should be used only as a reference for applying the MCCB. Final authority regarding the sizing and components used is governed by local and/or national electrical standards and the Jurisdiction Having Authority. Consult these standards before installing or designing any electrical system using short-circuit protective devices (SCPDs).

While this discussion is not intended to be a comprehensive guidebook to designing industrial control panels, we present several categories of typical applications where you can apply a feeder SCPD device:

- A panel in which the breaker feeds only motor loads
- A panel in which the breaker feeds fixed loads
- A panel in which the feeder breaker protects mixed loads

In all cases, the examples that are given here are for reference and you should reference your local electrical code requirements, as they may vary from location to location. You should verify that the breaker selection and installation complies with local codes, regulations, and/or standards.

A feeder is composed of the conductors of a wiring system between the service equipment or the generator switchboard of an isolated plant and the branch circuit overcurrent device.

NEC Article 220 states:

> Where a feeder supplies continuous loads or any combination of continuous and noncontinuous loads, the rating of the overcurrent device shall not be less than the noncontinuous load plus 125% of the continuous load. Exception: Where the assembly including the overcurrent devices protecting the feeder(s) are listed for operation at 100% of their rating, neither the ampere rating of the overcurrent device nor the ampacity of the feeder conductors shall be less than the sum of the continuous load plus the noncontinuous load. Only breakers listed for 100% application, and so labeled can be applied under the exception (for example N Frame and R Frame 140G devices that are specifically marked and rated 100%). Breakers without a 100% application listing and label are applied at 80% of rating.

NEC Article 430 states:

> Breakers for feeders having mixed loads; such as heating (lighting and heat appliances) and motors, should have ratings suitable for carrying the heating loads plus the capacity that is required by the motor loads...breakers for motor feeders shall have a rating not greater than the sum of the highest breaker rating of any of its branches and the full load currents of all other motors served by the feeder.

A molded case circuit breaker is rated in rms amperes at a specific ambient temperature. This ampere rating is the maximum continuous current it may carry in the ambient temperature for which it is calibrated. To minimize the need for derating, Allen-Bradley thermal-magnetic breakers are calibrated for an ambient temperature of 40 °C (104 °F), which is the average temperature within an enclosure. If the enclosure ambient temperature is known to exceed 40 °C (104 °F), the breaker used should either be specially calibrated for that temperature, or be derated accordingly.

Cable Selection

UL Listed circuit breakers that are rated 125 A or less shall be marked as being suitable for 60 °C (140 °F), 75 °C (167 °F) only or 60/75 °C (140/167 °F) wire. All Allen-Bradley breakers that are rated 125 A or less are marked for 60/75 °C wire. All UL Listed circuit breakers rated over 125 A are suitable for 75 °C (167 °F) conductors. Conductors rated for higher temperatures may be used, but must not be loaded to carry more current than the 75 °C (167 °F) ampacity of that size conductor for equipment that is marked or rated 75 °C (167 °F), or the 60 °C (140 °F) ampacity of that size conductor for equipment that is marked or rated 60 °C (140 °F). However, the full 90 °C (194 °F) ampacity may be used when applying derating factors, so long as the actual load does not exceed the lower of the derated ampacity or the 75 °C (167 °F) or 60 °C (140 °F) ampacity that applies.

Short Circuit Current Ratings (SCCRs)

Short Circuit Current Ratings (SCCR) are tested results for the limit of a circuit breaker to successfully protect downstream equipment from a short circuit condition. Individually, each device's breaking frame indicates the limit as the interrupting rating or breaking capacity. If a device is not capable of protecting on its own, such as an MCP, Rockwell Automation provides UL listed combinations of devices. Visit rok.auto/sccr to use our Global Short-circuit Rating Tool.

Selectivity and Back-up Coordination

For breaker coordination in main and branch circuits, see publication 140G-TD050.

Conductor Selection

UL Listed circuit breakers that are rated 125 A or less shall be marked as being suitable for 60 °C (140 °F), 75 °C (167 °F) only or 60/75 °C (140/167 °F) wire. All Allen-Bradley breakers that are rated 125 A or less are marked for 60/75 °C wire.

All UL Listed circuit breakers rated over 125 A are suitable for 75 °C (167 °F) conductors. Conductors rated for higher temperatures may be used, but must not be loaded to carry more current than the 75 °C (167 °F) ampacity of that size conductor for equipment that is marked or rated 75 °C (167 °F), or the 60 °C (140 °F) ampacity of that size conductor for equipment that is marked or rated 60 °C (140 °F). However, the full 90 °C (194 °F) ampacity may be used when applying derating factors, so long as the actual load does not exceed the lower of the derated ampacity or the 75 °C (167 °F) or 60 °C (140 °F) ampacity that applies.

Specialty Operating Conditions

For temperature derating specifications, see page 114.

Operation below 0 °C (32 °F)

Bulletin 140G MCCBs may be applied in ambient temperatures (near the MCCB within an enclosure) below 0 °C (32 °F). Applications below 0 °C (32 °F) must consider the possibility of ice forming within or on the MCCB and interfering with the internal or external operating mechanisms. All ratings below 0 °C (32 °F) are based on the absence of freezing water or other elements.

Trip Unit Temperatures

Thermal-magnetic circuit breakers are temperature sensitive. At ambient temperatures below 40 °C (104 °F), circuit breakers may carry more current than their continuous current rating. Nuisance tripping is not a problem under these lower temperature conditions, although consideration should be given to closer protection coordination to compensate for the additional current-carrying capability. In addition, the actual mechanical operation of the breaker could be affected if the ambient temperature is significantly below the 40 °C (104 °F) standard.

Electronic trip units are insensitive to ambient temperatures within a certain temperature range. The temperature range for most electronic trip units is -25 °C...+70 °C (-13 °F...+158 °F). Electronic trip units are not recommended for application temperatures below this range.

Breaking Frame Temperatures

All Allen-Bradley standard breakers are calibrated to a 40 °C (104 °F) ambient temperature. Breaking frames are not recommended at temperatures below -25 °C (-13 °F) because of the risk of critical components freezing.

Operation above 40 °C (104 °F)

Trip Unit Temperatures

For ambient temperatures above 40 °C (104 °F), thermal-magnetic circuit breakers should carry less current than their continuous current rating. Under this condition, the circuit breaker should be derated for the higher ambient temperature.

Electronic trip units are insensitive to ambient temperatures within a certain temperature range: -25 °C...+70 °C (-13 °F...+158 °F). Allen-Bradley MCCBs are designed to include temperature protective circuits that initiate a tripping operation and provide self-protection, should the internal temperature rise to an unsafe level. At temperatures above 70 °C (158 °F), the circuit breaker should be derated for the higher ambient temperature.

Breaking Frame Temperatures

All Allen-Bradley standard breakers are calibrated to a 40 °C (104 °F) ambient temperature. For any ambient temperature application significantly above or below 40 °C (104 °F), see Temperature Derating for All Bulletin 140G/MG Devices on page 114.

Altitude

Low voltage circuit breakers must be derated for voltage and interrupting rating at altitudes above 2000 m (6560 ft) above sea level. The thinner air at higher altitudes reduces cooling and dielectric characteristics compared to the denser air found at lower altitudes.

Use Table 13 to derate as appropriate.

Table 13 - Voltage and Current Rating

	Operational Voltage U_e [V]				Rated Uninterrupted Current I_u [A]			
Altitude	2000 m (6560 ft)	3000 m (9840 ft)	4000 m (13,120 ft)	5000 m (16,400 ft)	2000 m (6560 ft)	3000 m (9840 ft)	4000 m (13,120 ft)	5000 m (16,400 ft)
All Frames	100%	90%	79%	67%	100%	98%	93%	90%

Tropicalization (Humidity)

Bulletin 140G/MG Circuit Breakers are tested in compliance with IEC standards, making these devices suitable for hot-humid conditions defined in IEC 60721-2-1, climatograph 8. Bulletin 140G breakers include the following features to protect against humid conditions:

- Housings and components molded from glass-fiber-reinforced synthetic resins
- Metallic parts treated for anti-corrosion
- Zinc plating protected by a conversion layer (hexavalent-chromium free)
- Electronic circuits protected for anti-condensation

Electromagnetic Compatibility

The electronic trip units and electronic residual current releases for 140G/MG Circuit Breakers are in compliance with EN 60947-2 Appendix B and Appendix F and European Directive No. 2004/108/EC regarding EMC – electromagnetic compatibility.

Mounting Conditions

Unusual Mounting Configurations

Circuit breakers may be mounted in any position—sideways or upside-down-- without affecting the tripping characteristics or interrupting rating. However, mounting circuit breakers in a vertical position with the ON position other than UP are in violation of Article 240-81 of the NEC (valid for U.S. applications).

Shock and Vibration

Allen-Bradley Molded Case Circuit Breakers are shock tested to conform with IEC 60068-2-27, and vibration tested to IEC 60068-2-6.

Table 14 - MCCB Shock and Vibration Test Values

Bul. 140G MCCB Frame Size	Vibration	Shock (peak acceleration)
G	2 ...13.2 Hz ±1 mm; 13.2...100 Hz ±0.7 g	150m/s^2 peak; pulse duration 11 ms
H		
I		
J		
K		120m/s^2 peak; pulse duration 11 ms
M		–
N/NS		–
R	–	–

Maintenance Mode (MM)

Maintenance Mode (MM) in electronic LSIG-MM trip units offer an additional set of protection that temporarily lowers the trip curve of the breaker. When it is activated by a control signal, the instantaneous-style response of the breaker is temporarily lowered to limit arc flash availability and allow testing or maintenance on a system while the MCCB is energized or ON. This feature is adjustable on the trip unit, either with DIP switches or through menu selections on an LCD.

Bulletin 140G products with Maintenance Mode can be used to make a NEC 240.87 Arc Energy Reduction compliant solution when you complete the following required steps:

1. Complete an arc flash study on the specific application to determine the available short-circuit current at the site of the maintenance mode breaker in the circuit.
2. Perform arc flash and incident arc energy calculations with and without maintenance mode protection to ensure reduction in energy by available settings on the specific device in application (Rockwell Automation offers consultants and software for this purpose).
3. Enable and adjust the maintenance mode settings to appropriately reduce the energy from the study's findings in the specific application.
4. Install the circuit breaker with a local status indicator to show when Maintenance Mode is active (wiring diagrams are provided for maintenance mode indicators to assist you with the implementation of this functionality).
5. Make available documentation about the installation per requirements in NEC 240.87 (A).

Figure 12 shows a generic version of a trip curve with maintenance mode protections enabled. Table 15 lists the preset values for Maintenance Mode. Figure 13 shows the DIP switch settings for neutral protection.

N-, NS-, and R-frame devices feature a Maintenance Mode Test function within the Test menu. Maintenance mode connections are achieved using the terminal strip on the device. See publications 140G-IN067 and 140G-IN069 for details.

Figure 12 - Generic trip curve with LSIG and Maintenance Mode protections parameters

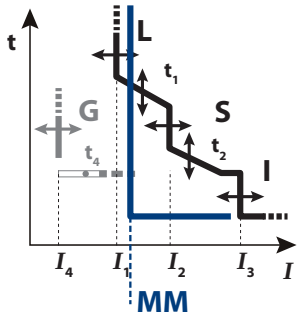

Table 15 - Default Settings for Maintenance Mode

Frame Size	Interface		Parameter	Setting Options	Required Components	
					Input Connection	Output Connection
K, M	DIP Switch		Enable	ON or OFF	Cat. No. 140G-K-CC maintenance mode connector (Table 134)	Cat. No. 140G-K-CIC MM connector (Table 134) OR Cat. No. 140G-K-CEAA or 140G-M-CEAA auxiliary contact for MM (Table 122)
			Threshold	1.5, 2.5, or 4; t=k instantaneous		
			Time	≤ 30 ms		
N, NS, R	LCD		Enable	ON or OFF	• Maintenance Mode Test function within the Test menu • Maintenance mode connections are achieved using the terminal strip on the device. – See publications 140G-IN067 and 140G-IN069 for input, output, and power supply connections to the terminal strip..	
			Threshold	1.5...4 in 0.1 increments; t=k instantaneous		
			Time	≤ 30 ms		

Figure 13 - DIP Settings for Neutral Protection on LSIG-MM Trip Units

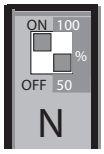

The Neutral (N) setting is available via DIP switch for LSI and LSIG only.
For LSIG-MM, the DIP switch setting is fixed ON, 100%.

Device Types and Accessories

Frame Size	G-Frame			H-Frame					I-Frame		J-Frame				K-Frame				M-Frame			N-Frame			NS-Frame			R-Frame
Rated Current I_n	125 A (160 A - IEC)			125 A (160 A - IEC)					225 A		250 A				400 A				800 A			1200 A			1200...1250 A			2000...3000 A
No. of Poles	3, 4			3, 4					3, 4		3, 4				3, 4				3, 4			3, 4			3, 4			3, 4
Dimensions [mm (in.)]																												
Height	130 (5.19)			130 (5.19)					150 (5.90)		160 (6.23)				205 (8.07)				268 (10.55)			268 (10.55)			268 (10.55)			382 (15.04)
Width, 3-Pole	76.2 (3)			90 (3.54)					105 (4.13)		105 (4.13)				139.5 (5.49)				210 (8.27)			210 (8.27)			210 (8.27)			428 (16.85)
Width, 4-Pole	101.2 (3.98)			120 (4.72)					140 (5.51)		140 (5.51)				186 (7.32)				280 (11.02)			280 (11.02)			280 (11.02)			554 (21.81)
Depth	70 (2.75)			82.5 (3.25)					70 (2.75)		82.5 (3.25)				103.5 (4.07)				103.5 (4.07)			125 (4.92)			125 (4.92)			231 (9.09)
Interrupting Rating [kA]																												
240V	50	65	100	65	100	150	200	200	50	65	65	100	150	200	100	150	200	200	100	200	200	65	100	150	65	100	150	125
480V	25	35	65	25	35	65	100	150	25	35	25	35	65	100	35	65	100	150	50	65	100	50	65	100	50	65	100	125
600V	–			14	18	25	35	42	–		14	18	25	35	25	35	65	100	25	35	42	25	50	65	25	50	65	100
600Y/347V	10	14	25	–					10	10	–				–				–			–			–			–
250V DC - 2 poles in series	35	42	50	35	50	65	85	85	25	35	35	42	50	100	–				–			–			–			–
500V DC - 3 poles in series	–			35	50	65	85	85	25	35	–				25	35	50	100	35	35	50	–			–			–
500V DC - 4 poles in series	35	50	50	–					–		–				–				–			–			–			–
600V DC - 3 poles in series	–			–					–		35	50	65	85	16	25	35	65	20	20	35 50	–			–			–
Breaking Capacity I_{cu} [kA]																												
220...240V	65	85	100	65	85	100	150	200	65	85	65	85	100	150	85	100	150	200	70	100	200	85	100	200	85	100	200	130
415V	36	50	70	36	50	70	120	150	36	50	36	50	70	120	50	70	120	150	36	70	100	50	70	120	50	70	120	80
440V	30	36	50	36	50	65	100	150	36	40	36	50	65	100	40	65	100	180	45	50	80	50	65	100	50	65	100	80
690V	6	8	10	10	12	15	18	20	36	50	10	12	15	18	25	40	70	80	20	25	30	30	42	50	30	42	50	40
250V DC	36	50	10	36	50	70	85	100	36	50	36	50	75	85	50	100	150		–			–			–			–
500V DC	36	50	70	36	50	70	85	100	36	50	36	50	75	85	36	50	70	100	–			–			–			–
750V DC	–			–					–		–				25	35	70	70	16	36	50	–			–			–
Protection Type:																												
Thermal-magnetic	✓			✓					✓		✓				✓				✓			–			–			–
Electronic (LSI, LSIG)	–			✓					–		✓				✓				✓			✓			✓			✓
LSIG-MM Maintenance Mode	–			–					–		–				✓				✓			✓			✓			✓
MCP	✓			✓					✓		✓				✓				✓			✓			–			–
MPCB	–			✓					–		✓				–				–			–			–			–
Molded Case Switch	✓			✓					✓		✓				✓				✓			✓			–			✓

Frame Size	G-Frame	H-Frame	I-Frame	J-Frame	K-Frame	M-Frame	N-Frame	NS-Frame	R-Frame
Internal Accessories									
Auxiliary Contact	✓	✓	✓	✓	✓	✓	✓	✓	✓
Alarm Contact	✓	✓	✓	✓	✓	✓	✓	✓	–
AX/AL Combo	✓	✓	✓	✓	✓	✓	✓	✓	–
Trip Unit Contact	–	✓		✓	–	–	✓	✓	✓
Shunt Trip	✓	✓	✓	✓	✓	✓	✓	✓	✓
Shunt Close	–	–	–	–	–	–	–	✓	✓
UV Relay	✓	✓	✓	✓	✓	✓	✓	✓	✓
Field Installable	✓	✓	✓	✓	✓	✓	✓	✓	✓
External Accessories									
End Cap (Bolt-on) Terminals	standard	standard	standard	standard	standard	standard	standard	standard	
Terminal Lugs	✓	✓	✓	✓	✓	✓	✓	✓	✓
Multi-cable Terminal Lugs	✓	✓	✓	✓	✓	–	–	–	–
Extended Terminal	✓	✓	✓	✓	✓	✓	✓	✓	–
Spreader Terminal	✓	✓	✓	✓	✓	✓	✓	✓	✓
Rear Terminal	–	–	–	–	–	–	✓	✓	✓
25 mm Phase barriers	standard	standard	standard	standard	standard	–	–	–	–
Extended Phase barriers	✓	✓	✓	✓	✓	✓	✓	✓	✓
Back Plates	standard	standard	standard	standard	standard	standard	–	–	–
DIN Mounting	✓	✓	✓	✓	–	–	–	–	–
Padlock	✓	✓	✓	✓	✓	✓	✓	✓	✓
Terminal Cover	✓	✓	✓	✓	✓	✓	✓	✓	–
Direct Rotary	✓	✓	✓	✓	✓	✓	✓	–	–
Variable Depth (Door)	✓	✓	✓	✓	✓	✓	✓	–	–
Internal NFPA 79 Handle	✓	✓	✓	✓	✓	✓	✓	–	–
Flange Operator	✓	✓	✓	✓	✓	✓	✓	–	–
Flange Cable	✓	✓	✓	✓	✓	✓	✓	–	–
Motor Operator	✓	✓	✓	✓	✓	✓	–	✓	✓
Residual Current	✓	✓	✓	✓	✓	–	–	–	–
Neutral Current	–	–	–	–	✓	✓	✓	✓	✓
Field Installable	✓	✓	✓	✓	✓	✓	✓	✓	✓

The Bulletin 140G family of Molded Case Circuit Breakers (MCCBs) offers a wide range of features include thermal/magnetic and electronic protection devices, high interrupting/breaking capacities and complete line of factory and field installed accessories. The Bulletin 140G MCCBs are ideal for use in line protection of control panels.

Molded case circuit breakers have the following features:

- 10...3000 A current range
- 3- and 4-pole devices
- Space-saving dimensions
- End cap/bolt-on terminals are standard
- Thermal/Magnetic protection: 15...800 A
- Electronic protection: 10...3000 A
- Approved for global application: UL, CSA, CCC, and IEC performance interrupting/breaking capacity
- Wide range of mounting options
- Extensive range of factory- or field-installed accessories

Table 16 - Standards Compliance and Certifications

Standards Compliance	Certifications
IEC 60947-2	CE Marked
UL489	CCC
CSA22.2, No. 5	CSA Certified
	UL Listed
	HACR Type

G-Frame	H-Frame	I-Frame	J-Frame
K-Frame	M-Frame	N-, NS-Frame	R-Frame

125 A, G-Frame Molded Case Circuit Breakers

Catalog Number Explanation

Examples that are given in this section are not intended to be used for product selection. Not all combinations generate a valid catalog number. Use ProposalWorks™ software to configure the MCCB. ProposalWorks software is available from rok.auto/systemtools.

G-Frame MCCBs are only available as assembled circuit breakers. Individual frame and trip unit components are not available.

Terminal lugs are not supplied and can be ordered separately. See page 93 for available lugs.

140G	-	G	6	C	4	-	C70	-		-	SD	-	KA
a		b	c	d	e		f		g		h		h

a	
Bulletin Number	
Code	**Description**
140G	Global Molded Case Circuit Breaker

b	
Frame/Rating	
Code	**Description**
G	125 A

c	
Interrupting Rating/Breaking Capacity (based on I_c at 480V)	
Code	**Description**
2	25 kA
3	35 kA
6	65 kA

d	
Protection Type	
Code	**Description**
C	Fixed thermal/fixed magnetic
E	Adjust thermal/fixed magnetic
S	Molded case switch (Isolator)

e	
No. of Poles	
Code	**Description**
3	3 poles
4	4 poles

f	
Rated Current	
Code(1)	**Description**
C⊗	example: C30 = 30 A
D⊗	example: D16 = 160 A

g	
Continuous Rated(2)	
Code	**Description**
Blank	80% rated

h
Factory-installed Options—see page 78

(1) Rated current equals the value of ⊗ multiplied by the first letter of the code. B = 0.1 ⊗, C = 1 ⊗, D = 10 ⊗, and E = 100 ⊗.
(2) For more information about 80% and 100% ratings, see page 17.

Assembled Molded Case Circuit Breakers—125 A, G-Frame

Table 17 - Interrupting Rating/Breaking Capacity — Thermal-magnetic Circuit Breakers

Interrupting Rating (50/60 Hz), UL 489/ CSA C22.2, No. 5 [kA]			Breaking Capacity (50/60 Hz), IEC 60947-2 I_{cu} [kA]/I_{cs} %								Breaking Capacity (DC), IEC 60947-2				Interrupting Code(1)
240V	480V	600Y/ 347V	220V(2)		415V		440V(2)		690V		250V DC (2 poles in series)		500V DC (3-pole in series)		
			I_{cu} [kA]	I_{cs} [%I_{cu}]	I_{cu} [kA]	I_{cs} [%I_{cu}]	I_{cu} [kA]	I_{cs} [%I_{cu}]	I_{cu} [kA]	I_{cs} [%I_{cu}]	I_{cu} [kA]	I_{cs} [%I_{cu}]	I_{cu} [kA]	I_{cs} [%I_{cu}]	
50	25	10	65	75	36	100	36	50	6	75	36	100	36	100	G2
65	35	14	85	75	50	75	50	50	8	50	50	100	50	100	G3
100	65	25	100	75	70	50	65	50	10	50	70	75	70	75	G6

(1) See Table 18 for Cat. No. selection.
(2) These ratings have not been tested for the CCC listing.

Table 18 - Thermal-magnetic, Fixed Thermal - Fixed Magnetic

Rated Current I_n [A]	Thermal Trip $I_r = I_n$ (Fixed) [A]	Magnetic Trip I_m [A]	Interrupting Code G2 Cat. No.		Interrupting Code G3 Cat. No.		Interrupting Code G6 Cat. No.	
			3 Poles	4 Poles	3 Poles	4 Poles	3 Poles	4 Poles
15	15	500	140G-G2C3-C15	140G-G2C4-C15	140G-G3C3-C15	140G-G3C4-C15	140G-G6C3-C15	140G-G6C4-C15
16	16	500	140G-G2C3-C16	140G-G2C4-C16	140G-G3C3-C16	140G-G3C4-C16	140G-G6C3-C16	140G-G6C4-C16
20	20	500	140G-G2C3-C20	140G-G2C4-C20	140G-G3C3-C20	140G-G3C4-C20	140G-G6C3-C20	140G-G6C4-C20
25	25	500	140G-G2C3-C25	140G-G2C4-C25	140G-G3C3-C25	140G-G3C4-C25	140G-G6C3-C25	140G-G6C4-C25
30	30	500	140G-G2C3-C30	140G-G2C4-C30	140G-G3C3-C30	140G-G3C4-C30	140G-G6C3-C30	140G-G6C4-C30
32	32	500	140G-G2C3-C32	140G-G2C4-C32	140G-G3C3-C32	140G-G3C4-C32	140G-G6C3-C32	140G-G6C4-C32
35	35	500	140G-G2C3-C35	140G-G2C4-C35	140G-G3C3-C35	140G-G3C4-C35	140G-G6C3-C35	140G-G6C4-C35
40	40	500	140G-G2C3-C40	140G-G2C4-C40	140G-G3C3-C40	140G-G3C4-C40	140G-G6C3-C40	140G-G6C4-C40
45	45	500	140G-G2C3-C45	140G-G2C4-C45	140G-G3C3-C45	140G-G3C4-C45	140G-G6C3-C45	140G-G6C4-C45
50	50	500	140G-G2C3-C50	140G-G2C4-C50	140G-G3C3-C50	140G-G3C4-C50	140G-G6C3-C50	140G-G6C4-C50
60	60	600	140G-G2C3-C60	140G-G2C4-C60	140G-G3C3-C60	140G-G3C4-C60	140G-G6C3-C60	140G-G6C4-C60
63	63	630	140G-G2C3-C63	140G-G2C4-C63	140G-G3C3-C63	140G-G3C4-C63	140G-G6C3-C63	140G-G6C4-C63
70	70	700	140G-G2C3-C70	140G-G2C4-C70	140G-G3C3-C70	140G-G3C4-C70	140G-G6C3-C70	140G-G6C4-C70
80	80	800	140G-G2C3-C80	140G-G2C4-C80	140G-G3C3-C80	140G-G3C4-C80	140G-G6C3-C80	140G-G6C4-C80
90	90	900	140G-G2C3-C90	140G-G2C4-C90	140G-G3C3-C90	140G-G3C4-C90	140G-G6C3-C90	140G-G6C4-C90
100	100	1000	140G-G2C3-D10	140G-G2C4-D10	140G-G3C3-D10	140G-G3C4-D10	140G-G6C3-D10	140G-G6C4-D10
110	110	1100	140G-G2C3-D11	140G-G2C4-D11	140G-G3C3-D11	140G-G3C4-D11	140G-G6C3-D11	140G-G6C4-D11
125	125	1250	140G-G2C3-D12	140G-G2C4-D12	140G-G3C3-D12	140G-G3C4-D12	140G-G6C3-D12	140G-G6C4-D12
160(1)	(2)	1600	140G-G2E3-D16	140G-G2E4-D16	140G-G3E3-D16	140G-G3E4-D16	140G-G6E3-D16	140G-G6E4-D16

(1) IEC only.
(2) Adjustable thermal trip with nine possible settings. 112 A min, 136 A med., 160 A max

125 A, H-Frame Molded Case Circuit Breakers

Catalog Number Explanation

Examples that are given in this section are not intended to be used for product selection. Not all combinations generate a valid catalog number. Use ProposalWorks™ software to configure the MCCB. ProposalWorks software is available from rok.auto/systemtools.

H-Frame MCCBs are available both as assembled circuit breakers and individual breaking frame and trip unit components that can be ordered for field assembly or factory installation.

Terminal lugs are not supplied and can be ordered separately. See page 93 for available lugs.

140G	-	H	3	C	3	-	C60	-		-	SD	-	AA
a		b	c	d	e		f		g		h		h

a	
Bulletin Number	
Code	**Description**
140G	Global Molded Case Circuit Breaker

b	
Frame/Rating	
Code	**Description**
H	125 A
HC	125 A, current limiting

c	
Interrupting Rating/Breaking Capacity (based on I_c at 480V)	
Code	**Description**
2	25 kA
3	35 kA
6	65 kA
0	100 kA
15	150 kA
T	Trip unit

d	
Protection Type	
Code	**Description**
C	Fixed thermal/fixed magnetic
F	Adjust thermal/ adjust magnetic
H	Electronic LSI- long, short, instant
I	Electronic LSIG -Long, short instant, and ground fault
X	Breaking Frame
S	Molded case switch (isolator)

e	
No. of Poles	
Code	**Description**
3	3 poles
4	4 poles

f	
Rated Current	
Code(1)	**Description**
C⊗	example: C30 = 30 A
D⊗	example: D16 = 160 A
Blank	Frame only

g	
Continuous Rated(2)	
Code	**Description**
Blank	80% rated

h
Factory-installed Options—see page 78

(1) Rated current equals the value of ⊗ multiplied by the first letter of the code. B = 0.1 ⊗, C = 1 ⊗, D = 10 ⊗, and E = 100 ⊗.
(2) For more information about 80% and 100% ratings, see page 17.

Breaking Frames and Trip Units

Frame

+

Trip Unit

=

MCCB

Table 19 - Breaking Frames, 125 A Rated Current

Interrupting Rating (50/60 Hz), UL 489/ CSA 22.2, No. 5 [kA](1)			Breaking Capacity (50/60 Hz), IEC 60947-2 I_{cu} [kA]/I_{cs} %								Breaking Capacity (DC), IEC 60947-2 (1)				Cat. No.	
240V	480V	600V	220V		415V		440V		690V		250V DC (2 poles in series)		500V DC (3 poles in series)			
			I_{cu} [kA]	I_{cs} [%I_{cu}]	I_{cu} [kA]	I_{cs} [%I_{cu}]	I_{cu} [kA]	I_{cs} [%I_{cu}]	I_{cu} [kA]	I_{cs} [%I_{cu}]	I_{cu} [kA]	I_{cs} [%I_{cu}]	I_{cu} [kA]	I_{cs} [%I_{cu}]	3 Poles	4 Poles
65	25	14	65	100	36	100	36	100	10	100	36	100	36	100	140G-H2X3	140G-H2X4
100	35	18	85	100	50	100	50	100	12	100	50	100	50	100	140G-H3X3	140G-H3X4
150	65	25	100	100	70	100	65	100	15	100	70	100	70	100	140G-H6X3	140G-H6X4
200	100	35	150	100	120	100	100	100	18	75	85	100	85	100	140G-H0X3	140G-H0X4
200	150	42	200	100	150	100	150	100	20	75	100	100	100	100	140G-H15X3	140G-H15X4
Current-limiting Breaking Frames																
150	65	25	100	100	70	100	65	100	15	100	70	100	70	100	140G-HC6X3	–
200	100	35	150	100	120	100	100	100	18	75	85	100	85	100	140G-HC0X3	–

(1) DC rating applies to thermal-magnetic trip unit only.

Table 20 - Trip Units, Thermal-Magnetic

Rated Current I_n [A]	Thermal Trip I_r [A]	Magnetic Trip I_m [A]	Protection Type	Cat. No.	
				3 Poles	4 Poles
50	50	500	C (Fixed)	140G-HTC3-C50	140G-HTC4-C50
60	60	600	C (Fixed)	140G-HTC3-C60	140G-HTC4-C60
63	63	630	C (Fixed)	140G-HTC3-C63	140G-HTC4-C63
70	70	700	C (Fixed)	140G-HTC3-C70	140G-HTC4-C70
80	56...80 (1)	400...800 (2)	F (Adjustable)	140G-HTF3-C80	140G-HTF4-C80
90	63...90 (1)	450...900 (2)	F (Adjustable)	140G-HTF3-C90	140G-HTF4-C90
100	70...100 (1)	500...1000 (2)	F (Adjustable)	140G-HTF3-D10	140G-HTF4-D10
110	77...110 (1)	550...1100 (2)	F (Adjustable)	140G-HTF3-D11	140G-HTF4-D11
125	87...125 (1)	625...1250 (2)	F (Adjustable)	140G-HTF3-D12	140G-HTF4-D12

(1) Adjustable thermal trip with nine possible settings. The table shows min and max values.
(2) Adjustable magnetic trip with nine possible settings. The table shows min and max values.

Table 21 - Trip Units, Electronic LSI (Long, Short, Instantaneous)

Rated Current I_n [A]	Protection Type					Cat. No.	
	L		S		I	3 Poles	4 Poles
	I_1=0.4...1 x I_n	t_1=s	I_2=1...10 x I_n	t_2=s	I_3=1...10 x I_n		
60	24...60	3, 12, 36, 60	60...600	0.05, 0.1, 0.2, 0.4	60...600	140G-HTH3-C60	140G-HTH4-C60
100	40...100	3, 12, 36, 60	100...1000	0.05, 0.1, 0.2, 0.4	100...1000	140G-HTH3-D10	140G-HTH4-D10
125	50...125	3, 12, 36, 60	125...1250	0.05, 0.1, 0.2, 0.4	125...1250	140G-HTH3-D12	140G-HTH4-D12

Table 22 - Trip Units, Electronic LSIG (Long, Short, Instantaneous, Ground Fault)

Rated Current I_n [A]	Protection Type							Cat. No.	
	L		S		I	G		3 Poles	4 Poles
	I_1=0.4...1 x I_n	t_1=s	I_2=1...10 x I_n	t_2=s	I_3=1...10 x I_n	I_4=0.2...1 x I_n	t_4=s		
60	24...60	3, 12, 36, 60	60...600	0.05, 0.1, 0.2, 0.4	60...600	12...60	0.1, 0.2, 0.4, 0.8	140G-HTI3-C60	140G-HTI4-C60
100	40...100	3, 12, 36, 60	100...1000	0.05, 0.1, 0.2, 0.4	100...1000	20...100	0.1, 0.2, 0.4, 0.8	140G-HTI3-D10	140G-HTI4-D10
125	50...125	3, 12, 36, 60	125...1250	0.05, 0.1, 0.2, 0.4	125...1250	25...125	0.1, 0.2, 0.4, 0.8	140G-HTI3-D12	140G-HTI4-D12

Assembled Molded Case Circuit Breakers — 125 A, H-Frame

Table 23 - Interrupting Rating/Breaking Capacity — Thermal-magnetic Circuit Breakers

Interrupting Rating (50/60 Hz), UL 489/ CSA 22.2, No. 5 [kA]			Breaking Capacity (50/60 Hz), IEC 60947-2 I_{cu} [kA]/I_{cs} %								Breaking Capacity (DC), IEC 60947-2 (1)				Interrupting Code(2)
240V	480V	600V	220V		415V		440V		690V		250V DC (2 poles in series)		500V DC (3 poles in series)		
			I_{cu} [kA]	I_{cs} [%I_{cu}]	I_{cu} [kA]	I_{cs} [%I_{cu}]	I_{cu} [kA]	I_{cs} [%I_{cu}]	I_{cu} [kA]	I_{cs} [%I_{cu}]	I_{cu} [kA]	I_{cs} [%I_{cu}]	I_{cu} [kA]	I_{cs} [%I_{cu}]	
65	25	14	65	100	36	100	36	100	10	100	36	100	36	100	H2
100	35	18	85	100	50	100	50	100	12	100	50	100	50	100	H3
150	65	25	100	100	70	100	65	100	15	100	70	100	70	100	H6(3)
200	100	35	150	100	120	100	100	100	18	75	85	100	85	100	H0(3)
200	150	42	200	100	150	100	150	100	20	75	100	100	100	100	H15

(1) DC Rating applies to thermal-magnetic trip units only.
(2) See Table 24 and Table 25 for Cat. No. selection.
(3) Add a "C" after the "H" in the interrupting code to select 3-pole current-limiting devices. Example, Cat. No. 140G-HC6...

Table 24 - Thermal-magnetic, Fixed and Adjustable

Rated Current I_n [A]	Thermal Trip I_r [A]	Magnetic Trip I_m [A]	Interrupting Code H2		Interrupting Code H3		Interrupting Code H6	
			Cat. No.		Cat. No.		Cat. No.	
			3 Poles	4 Poles	3 Poles	4 Poles	3 Poles	4 Poles
15	15	400	140G-H2C3-C15	140G-H2C4-C15	140G-H3C3-C15	140G-H3C4-C15	140G-H6C3-C15(1)	140G-H6C4-C15
16	16	400	140G-H2C3-C16	140G-H2C4-C16	140G-H3C3-C16	140G-H3C4-C16	140G-H6C3-C16(1)	140G-H6C4-C16
20	20	400	140G-H2C3-C20	140G-H2C4-C20	140G-H3C3-C20	140G-H3C4-C20	140G-H6C3-C20(1)	140G-H6C4-C20
25	25	400	140G-H2C3-C25	140G-H2C4-C25	140G-H3C3-C25	140G-H3C4-C25	140G-H6C3-C25(1)	140G-H6C4-C25
30	30	400	140G-H2C3-C30	140G-H2C4-C30	140G-H3C3-C30	140G-H3C4-C30	140G-H6C3-C30(1)	140G-H6C4-C30
32	32	400	140G-H2C3-C32	140G-H2C4-C32	140G-H3C3-C32	140G-H3C4-C32	140G-H6C3-C32(1)	140G-H6C4-C32
35	35	400	140G-H2C3-C35	140G-H2C4-C35	140G-H3C3-C35	140G-H3C4-C35	140G-H6C3-C35(1)	140G-H6C4-C35
40	40	400	140G-H2C3-C40	140G-H2C4-C40	140G-H3C3-C40	140G-H3C4-C40	140G-H6C3-C40(1)	140G-H6C4-C40
50	50	500	140G-H2C3-C50	140G-H2C4-C50	140G-H3C3-C50	140G-H3C4-C50	140G-H6C3-C50	140G-H6C4-C50
60	60	600	140G-H2C3-C60	140G-H2C4-C60	140G-H3C3-C60	140G-H3C4-C60	140G-H6C3-C60	140G-H6C4-C60
63	63	630	140G-H2C3-C63	140G-H2C4-C63	140G-H3C3-C63	140G-H3C4-C63	140G-H6C3-C63	140G-H6C4-C63
70	70	700	140G-H2C3-C70	140G-H2C4-C70	140G-H3C3-C70	140G-H3C4-C70	140G-H6C3-C70	140G-H6C4-C70
80	56...80 (2)	400...800 (3)	140G-H2F3-C80	140G-H2F4-C80	140G-H3F3-C80	140G-H3F4-C80	140G-H6F3-C80	140G-H6F4-C80
90	63...90 (2)	450...900 (3)	140G-H2F3-C90	140G-H2F4-C90	140G-H3F3-C90	140G-H3F4-C90	140G-H6F3-C90	140G-H6F4-C90
100	70...100 (2)	500...1000 (3)	140G-H2F3-D10	140G-H2F4-D10	140G-H3F3-D10	140G-H3F4-D10	140G-H6F3-D10	140G-H6F4-D10
110	77...110 (2)	550...1100 (3)	140G-H2F3-D11	140G-H2F4-D11	140G-H3F3-D11	140G-H3F4-D11	140G-H6F3-D11	140G-H6F4-D11
125	87...125 (2)	625...1250 (3)	140G-H2F3-D12	140G-H2F4-D12	140G-H3F3-D12	140G-H3F4-D12	140G-H6F3-D12	140G-H6F4-D12
160 (4)	112...160 (2)	800...1600 (3)	140G-H2F3-D16	140G-H2F4-D16	140G-H3F3-D16	140G-H3F4-D16	140G-H6F3-D16	140G-H6F4-D16

(1) Add a "C" after the "H" in the interrupting code to select 3-pole current-limiting devices. Example, Cat. No. 140G-HC6...
(2) Adjustable thermal trip with nine possible settings. The table shows min and max values.
(3) Adjustable magnetic trip with nine possible settings. The table shows min and max values.
(4) IEC only.

Table 25 - Thermal-magnetic, Fixed and Adjustable

Rated Current I_n [A]	Thermal Trip I_r [A]	Magnetic Trip I_m [A]	Interrupting Code H0		Interrupting Code H15	
			Cat. No.		Cat. No.	
			3 Poles	4 Poles	3 Poles	4 Poles
15	15	400	140G-H0C3-C15(1)	140G-H0C4-C15	140G-H15C3-C15	140G-H15C4-C15
16	16	400	140G-H0C3-C16(1)	140G-H0C4-C16	140G-H15C3-C16	140G-H15C4-C16
20	20	400	140G-H0C3-C20(1)	140G-H0C4-C20	140G-H15C3-C20	140G-H15C4-C20
25	25	400	140G-H0C3-C25(1)	140G-H0C4-C25	140G-H15C3-C25	140G-H15C4-C25
30	30	400	140G-H0C3-C30(1)	140G-H0C4-C30	140G-H15C3-C30	140G-H15C4-C30
32	32	400	140G-H0C3-C32(1)	140G-H0C4-C32	140G-H15C3-C32	140G-H15C4-C32
35	35	400	140G-H0C3-C35(1)	140G-H0C4-C35	140G-H15C3-C35	140G-H15C4-C35
40	40	400	140G-H0C3-C40(1)	140G-H0C4-C40	140G-H15C3-C40	140G-H15C4-C40
50	50	500	140G-H0C3-C50	140G-H0C4-C50	140G-H15C3-C50	140G-H15C4-C50
60	60	600	140G-H0C3-C60	140G-H0C4-C60	140G-H15C3-C60	140G-H15C4-C60
63	63	630	140G-H0C3-C63	140G-H0C4-C63	140G-H15C3-C63	140G-H15C4-C63
70	70	700	140G-H0C3-C70	140G-H0C4-C70	140G-H15C3-C70	140G-H15C4-C70
80	56...80 (2)	400...800 (3)	140G-H0F3-C80	140G-H0F4-C80	140G-H15F3-C80	140G-H15F4-C80
90	63...90 (2)	450...900 (3)	140G-H0F3-C90	140G-H0F4-C90	140G-H15F3-C90	140G-H15F4-C90
100	70...100 (2)	500...1000 (3)	140G-H0F3-D10	140G-H0F4-D10	140G-H15F3-D10	140G-H15F4-D10
110	77...110 (2)	550...1100 (3)	140G-H0F3-D11	140G-H0F4-D11	140G-H15F3-D11	140G-H15F4-D11
125	84...120 (2)	625...1250 (3)	140G-H0F3-D12	140G-H0F4-D12	140G-H15F3-D12	140G-H15F4-D12
160 (4)	112...160 (2)	800...1600 (3)	140G-H0F3-D16	140G-H0F4-D16	140G-H15F3-D16	140G-H15F4-D16

(1) Add a "C" after the "H" in the interrupting code to select 3-pole current-limiting devices. Example, Cat. No. 140G-HC6...
(2) Adjustable thermal trip with nine possible settings. The table shows min and max values.
(3) Adjustable magnetic trip with nine possible settings. The table shows min and max values.
(4) IEC only.

Table 26 - Interrupting Rating/Breaking Capacity — Electronic Circuit Breakers

Interrupting Rating (50/60 Hz), UL 489/ CSA 22.2, No. 5 [kA]			Breaking Capacity (50/60 Hz), IEC 60947-2 I_{cu} [kA]/I_{cs} %								Interrupting Code[1]
240V	480V	600V	220V		415V		440V		690V		
			I_{cu} [kA]	I_{cs} [%I_{cu}]	I_{cu} [kA]	I_{cs} [%I_{cu}]	I_{cu} [kA]	I_{cs} [%I_{cu}]	I_{cu} [kA]	I_{cs} [%I_{cu}]	
65	25	14	65	100	36	100	36	100	10	100	H2
100	35	18	85	100	50	100	50	100	12	100	H3
150	65	25	100	100	70	100	65	100	15	100	H6[2]
200	100	35	150	100	120	100	100	100	18	100	H0[2]
200	150	42	200	100	150	100	150	100	20	75	H15

(1) See Table 27 through Table 32 for Cat. No. selection.
(2) Add a "C" after the "H" in the interrupting code to select 3-pole current-limiting devices. Example, Cat. No. 140G-HC6...

Table 27 - Electronic LSI (Long, Short, Instantaneous)

Rated Current I_n [A]	Protection Type					Interrupting Code H2		Interrupting Code H3	
	L		S		I	Cat. No.		Cat. No.	
	I_1=0.4...1 x I_n	t_1=s	I_2=1...10 x I_n	t_2=s	I_3=1...10 x I_n	3 Poles	4 Poles	3 Poles	4 Poles
25	10...25	3, 12, 36, 60	25...250	0.05, 0.1, 0.2, 0.4	25...250	140G-H2H3-C25	140G-H2H4-C25	140G-H3H3-C25	140G-H3H4-C25
60	24...60	3, 12, 36, 60	60...600	0.05, 0.1, 0.2, 0.4	60...600	140G-H2H3-C60	140G-H2H4-C60	140G-H3H3-C60	140G-H3H4-C60
100	40...100	3, 12, 36, 60	100...1000	0.05, 0.1, 0.2, 0.4	100...1000	140G-H2H3-D10	140G-H2H4-D10	140G-H3H3-D10	140G-H3H4-D10
125	50...125	3, 12, 36, 60	125...1250	0.05, 0.1, 0.2, 0.4	125...1250	140G-H2H3-D12	140G-H2H4-D12	140G-H3H3-D12	140G-H3H4-D12
160[1]	64...160	3, 12, 36, 60	160...1600	0.05, 0.1, 0.2, 0.4	160...1600	140G-H2H3-D16	140G-H2H4-D16	140G-H3H3-D16	140G-H3H4-D16

(1) IEC only.

Table 28 - Electronic LSI (Long, Short, Instantaneous)

Rated Current I_n [A]	Protection Type					Interrupting Code H6	
	L		S		I	Cat. No.	
	I_1=0.4...1 x I_n	t_1=s	I_2=1...10 x I_n	t_2=s	I_3=1...10 x I_n	3 Poles	4 Poles
25	10...25	3, 12, 36, 60	25...250	0.05, 0.1, 0.2, 0.4	25...250	140G-H6H3-C25[1]	140G-H6H4-C25
60	24...60	3, 12, 36, 60	60...600	0.05, 0.1, 0.2, 0.4	60...600	140G-H6H3-C60	140G-H6H4-C60
100	40...100	3, 12, 36, 60	100...1000	0.05, 0.1, 0.2, 0.4	100...1000	140G-H6H3-D10	140G-H6H4-D10
125	50...125	3, 12, 36, 60	125...1250	0.05, 0.1, 0.2, 0.4	125...1250	140G-H6H3-D12	140G-H6H4-D12
160	64...160	3, 12, 36, 60	160...1600	0.05, 0.1, 0.2, 0.4	160...1600	140G-H6H3-D16	140G-H6H4-D16

(1) Add a "C" after the "H" in the interrupting code to select 3-pole current-limiting devices. Example, Cat. No. 140G-HC6...

Table 29 - Electronic LSI (Long, Short, Instantaneous)

Rated Current I_n [A]	Protection Type					Interrupting Code H0		Interrupting Code H15	
	L		S		I	Cat. No.		Cat. No.	
	I_1=0.4...1 x I_n	t_1=s	I_2=1...10 x I_n	t_2=s	I_3=1...10 x I_n	3 Poles	4 Poles	3 Poles	4 Poles
25	10...25	3, 12, 36, 60	25...250	0.05, 0.1, 0.2, 0.4	25...250	140G-H0H3-C25[1]	140G-H0H4-C25	140G-H15H3-C25	140G-H15H4-C25
60	24...60	3, 12, 36, 60	60...600	0.05, 0.1, 0.2, 0.4	60...600	140G-H0H3-C60	140G-H0H4-C60	140G-H15H3-C60	140G-H15H4-C60
100	40...100	3, 12, 36, 60	100...1000	0.05, 0.1, 0.2, 0.4	100...1000	140G-H0H3-D10	140G-H0H4-D10	140G-H15H3-D10	140G-H15H4-D10
125	50...125	3, 12, 36, 60	125...1250	0.05, 0.1, 0.2, 0.4	125...1250	140G-H0H3-D12	140G-H0H4-D12	140G-H15H3-D12	140G-H15H4-D12
160	64...160	3, 12, 36, 60	160...1600	0.05, 0.1, 0.2, 0.4	160...1600	140G-H0H3-D16	140G-H0H4-D16	140G-H15H3-D16	140G-H15H4-D16

(1) Add a "C" after the "H" in the interrupting code to select 3-pole current-limiting devices. Example, Cat. No. 140G-HC6...

Table 30 - Electronic LSIG (Long, Short, Instantaneous, Ground Fault)

Rated Current I_n [A]	Protection Type							Interrupting Code H2		Interrupting Code H3	
	L		S		I	G		Cat. No.		Cat. No.	
	I_1=0.4... 1 x I_n	t_1=s	I_2=1... 10 x I_n	t_2=s	I_3=1... 10 x I_n	I_4=0.2 ... 1 x I_n	t_4=s	3 Poles	4 Poles	3 Poles	4 Poles
25	10...25	3, 12, 36, 60	25...250	0.05, 0.1, 0.2, 0.4	25...250	5...25	0.1, 0.2, 0.4, 0.8	140G-H2I3-C25	140G-H2I4-C25	140G-H3I3-C25	140G-H3I4-C25
60	24...60	3, 12, 36, 60	60...600	0.05, 0.1, 0.2, 0.4	60...600	12...60	0.1, 0.2, 0.4, 0.8	140G-H2I3-C60	140G-H2I4-C60	140G-H3I3-C60	140G-H3I4-C60
100	40...100	3, 12, 36, 60	100...1000	0.05, 0.1, 0.2, 0.4	100...1000	20...100	0.1, 0.2, 0.4, 0.8	140G-H2I3-D10	140G-H2I4-D10	140G-H3I3-D10	140G-H3I4-D10
125	50...125	3, 12, 36, 60	125...1250	0.05, 0.1, 0.2, 0.4	125...1250	25...125	0.1, 0.2, 0.4, 0.8	140G-H2I3-D12	140G-H2I4-D12	140G-H3I3-D12	140G-H3I4-D12
160	64...160	3, 12, 36, 60	160...1600	0.05, 0.1, 0.2, 0.4	160...1600	32...160	0.1, 0.2, 0.4, 0.8	140G-H2I3-D16	140G-H2I4-D16	140G-H3I3-D16	140G-H3I4-D16

Table 31 - Electronic LSIG (Long, Short, Instantaneous, Ground Fault)

Rated Current I_n [A]	Protection Type							Interrupting Code H6	
	L		S		I	G		Cat. No.	
	I_1=0.4...1 x I_n	t_1=s	I_2=1...10 x I_n	t_2=s	I_3=1...10 x I_n	I_4=0.2...1 x I_n	t_4=s	3 Poles	4 Poles
25	10...25	3, 12, 36, 60	25...250	0.05, 0.1, 0.2, 0.4	25...250	5...25	0.1, 0.2, 0.4, 0.8	140G-H6I3-C25(1)	140G-H6I4-C25
60	24...60	3, 12, 36, 60	60...600	0.05, 0.1, 0.2, 0.4	60...600	12...60	0.1, 0.2, 0.4, 0.8	140G-H6I3-C60	140G-H6I4-C60
100	40...100	3, 12, 36, 60	100...1000	0.05, 0.1, 0.2, 0.4	100...1000	20...100	0.1, 0.2, 0.4, 0.8	140G-H6I3-D10	140G-H6I4-D10
125	50...125	3, 12, 36, 60	125...1250	0.05, 0.1, 0.2, 0.4	125...1250	25...125	0.1, 0.2, 0.4, 0.8	140G-H6I3-D12	140G-H6I4-D12
160	64...160	3, 12, 36, 60	160...1600	0.05, 0.1, 0.2, 0.4	160...1600	32...160	0.1, 0.2, 0.4, 0.8	140G-H6I3-D16	140G-H6I4-D16

(1) Add a "C" after the "H" in the interrupting code to select 3-pole current-limiting devices. Example, Cat. No. 140G-HC6...

Table 32 - Electronic LSIG (Long, Short, Instantaneous, Ground Fault)

Rated Current I_n [A]	Protection Type							Interrupting Code H0		Interrupting Code H15	
	L		S		I	G		Cat. No.		Cat. No.	
	I_1=0.4... 1 x I_n	t_1=s	I_2=1...10 x I_n	t_2=s	I_3=1... 10 x I_n	I_4=0.2 ...1 x I_n	t_4=s	3 Poles	4 Poles	3 Poles	4 Poles
25	10...25	3, 12, 36, 60	25...250	0.05, 0.1, 0.2, 0.4	25...250	5...25	0.1, 0.2, 0.4, 0.8	140G-H0I3-C25(1)	140G-H0I4-C25	140G-H15I3-C25	140G-H15I4-C25
60	24...60	3, 12, 36, 60	60...600	0.05, 0.1, 0.2, 0.4	60...600	12...60	0.1, 0.2, 0.4, 0.8	140G-H0I3-C60	140G-H0I4-C60	140G-H15I3-C60	140G-H15I4-C60
100	40...100	3, 12, 36, 60	100...1000	0.05, 0.1, 0.2, 0.4	100...1000	20...100	0.1, 0.2, 0.4, 0.8	140G-H0I3-D10	140G-H0I4-D10	140G-H15I3-D10	140G-H15I4-D10
125	50...125	3, 12, 36, 60	125...1250	0.05, 0.1, 0.2, 0.4	125...1250	25...125	0.1, 0.2, 0.4, 0.8	140G-H0I3-D12	140G-H0I4-D12	140G-H15I3-D12	140G-H15I4-D12
160	64...160	3, 12, 36, 60	160...1600	0.05, 0.1, 0.2, 0.4	160...1600	32...160	0.1, 0.2, 0.4, 0.8	140G-H0I3-D16	140G-H0I4-D16	140G-H15I3-D16	140G-H15I4-D16

(1) Add a "C" after the "H" in the interrupting code to select 3-pole current-limiting devices. Example, Cat. No. 140G-HC6...

225 A I-Frame Case Circuit Breakers

Catalog Number Explanation

Examples that are given in this section are not intended to be used for product selection. Not all combinations generate a valid catalog number. Use ProposalWorks™ software to configure the MCCB. ProposalWorks software is available from rok.auto/systemtools.

I-Frame MCCBs are only available as assembled circuit breakers. Individual frame and trip unit components are not available.

Terminal lugs are not supplied and can be ordered separately. See page 93 for available lugs.

140G	-	I	3	C	3	-	C60	-		-	SA	-	KA
a		b	c	d	e		f		g		h		h

a	
Bulletin Number	
Code	**Description**
140G	Global Molded Case Circuit Breaker

b	
Frame/Rating	
Code	**Description**
I	225 A

c	
Interrupting Rating/Breaking Capacity (based on I_c at 480V)	
Code	**Description**
2	25 kA
3	35 kA

d	
Protection Type	
Code	**Description**
C	Fixed thermal/fixed magnetic
S	Molded case switch (Isolator)

e	
No. of Poles	
Code	**Description**
3	3 poles
4	4 poles

f	
Rated Current	
Code(1)	**Description**
C⊗	example: C30 = 30 A
D⊗	example: D16 = 160 A

g	
Continuous Rated(2)	
Code	**Description**
Blank	80% rated

h
Factory-installed Options—see page 78

(1) Rated current equals the value of ⊗ multiplied by the first letter of the code. B = 0.1 ⊗, C = 1 ⊗, D = 10 ⊗, and E = 100 ⊗.
(2) For more information about 80% and 100% ratings, see page 17.

Assembled Molded Case Circuit Breakers — 225 A I-Frame

Table 33 - Interrupting Rating/Breaking Capacity — Thermal-magnetic Circuit Breakers

Interrupting Rating (50/60 Hz), UL 489/ CSA 22.2, No. 5 [kA](1)			Breaking Capacity (50/60 Hz), IEC 60947-2 I_{cu} [kA]/I_{cs}%								Breaking Capacity (DC), IEC 60947-2				Interrupting Code(2)
240V	480V	600Y/ 347V	220V		415V		440V		690V		250V DC (2 poles in series)		500V DC (3 poles in series)		
			I_{cu} [kA]	I_{cs} [%I_{cu}]	I_{cu} [kA]	I_{cs} [%I_{cu}]	I_{cu} [kA]	I_{cs} [%I_{cu}]	I_{cu} [kA]	I_{cs} [%I_{cu}]	I_{cu} [kA]	I_{cs} [%I_{cu}]	I_{cu} [kA]	I_{cs} [%I_{cu}]	
50	25	10	50	75	36	75	25	75	5	50	36	100	36	100	I2
65	35	10	85	50	50	50	40	50	6	50	50	75	50	75	I3

(1) For DC Ratings, see Table 179.
(2) See Table 34 for Cat. No. selection.

Table 34 - Thermal-magnetic, Fixed

Rated Current I_n [A]	Thermal Trip $I_r = I_n$ (Fixed) [A]	Magnetic Trip I_m [A]	Interrupting Code I2		Interrupting Code I3	
			Cat. No.		Cat. No.	
			3 Poles	4 Poles	3 Poles	4 Poles
60	60	600	140G-I2C3-C60	140G-I2C4-C60	140G-I3C3-C60	140G-I3C4-C60
63	63	630	140G-I2C3-C63	140G-I2C4-C63	140G-I3C3-C63	140G-I3C4-C63
70	70	700	140G-I2C3-C70	140G-I2C4-C70	140G-I3C3-C70	140G-I3C4-C70
80	80	800	140G-I2C3-C80	140G-I2C4-C80	140G-I3C3-C80	140G-I3C4-C80
90	90	900	140G-I2C3-C90	140G-I2C4-C90	140G-I3C3-C90	140G-I3C4-C90
100	100	1000	140G-I2C3-D10	140G-I2C4-D10	140G-I3C3-D10	140G-I3C4-D10
110	110	1100	140G-I2C3-D11	140G-I2C4-D11	140G-I3C3-D11	140G-I3C4-D11
125	125	1250	140G-I2C3-D12	140G-I2C4-D12	140G-I3C3-D12	140G-I3C4-D12
150	150	1500	140G-I2C3-D15	140G-I2C4-D15	140G-I3C3-D15	140G-I3C4-D15
160	160	1600	140G-I2C3-D16	140G-I2C4-D16	140G-I3C3-D16	140G-I3C4-D16
175	175	1750	140G-I2C3-D17	140G-I2C4-D17	140G-I3C3-D17	140G-I3C4-D17
200	200	2000	140G-I2C3-D20	140G-I2C4-D20	140G-I3C3-D20	140G-I3C4-D20
225	225	2250	140G-I2C3-D22	140G-I2C4-D22	140G-I3C3-D22	140G-I3C4-D22

250 A, J-Frame Molded Case Circuit Breakers

Catalog Number Explanation

Examples that are given in this section are not intended to be used for product selection. Not all combinations generate a valid catalog number. Use ProposalWorks™ software to configure the MCCB. ProposalWorks software is available from rok.auto/systemtools.

J-Frame MCCBs are available both as assembled circuit breakers and individual breaking frame and trip unit components that can be ordered for field assembly or factory installation.

Terminal lugs are not supplied and can be ordered separately. See page 93 for available lugs.

140G	-	J	3	C	3	-	C60	-		-	SD	-	AA
a		b	c	d	e		f		g		h		h

a	
Bulletin Number	
Code	**Description**
140G	Global Molded Case Circuit Breaker

b	
Frame/Rating	
Code	**Description**
J	250 A
JC	250 A, current limiting

c	
Interrupting Rating/Breaking Capacity (based on I_c at 480V)	
Code	**Description**
2	25 kA
3	35 kA
6	65 kA
0	100 kA
T	Trip unit

d	
Protection Type	
Code	**Description**
C	Fixed thermal/ fixed magnetic
E	Adjust thermal/ fixed magnetic
F	Adjust thermal/ adjust magnetic
H	Electronic LSI-long, short, instant
I	Electronic LSIG -long, short, instant, and ground fault
X	Breaking Frame
S	Molded case switch (isolator)

e	
No. of Poles	
Code	**Description**
3	3 poles
4	4 poles

f	
Rated Current	
Code(1)	**Description**
C⊗	example: C30 = 30 A
D⊗	example: D16 = 160 A
Blank	Frame only

g	
Continuous Rated(2)	
Code	**Description**
Blank	80% rated

h
Factory-installed Options—see page 78

(1) Rated current equals the value of ⊗ multiplied by the first letter of the code. B = 0.1 ⊗, C = 1 ⊗, D = 10 ⊗, and E = 100 ⊗.

(2) For more information about 80% and 100% ratings, see page 17.

Breaking Frames and Trip Units

Frame + Trip Unit = MCCB

Table 35 - Breaking Frames, 250 A Rated Current

Interrupting Rating (50/60 Hz), UL 489/ CSA 22.2, No. 5 [kA]			Breaking Capacity (50/60 Hz), IEC 60947-2 I_{cu} [kA]/I_{cs}%								Breaking Capacity (DC), IEC 60947-2[1]				Cat. No.	
240V	480V	600V	220V		415V		440V		690V		250V DC (2 poles in series)		500V DC (3 poles in series)			
			I_{cu} [kA]	I_{cs} [%I_{cu}]	I_{cu} [kA]	I_{cs} [%I_{cu}]	I_{cu} [kA]	I_{cs} [%I_{cu}]	I_{cu} [kA]	I_{cs} [%I_{cu}]	I_{cu} [kA]	I_{cs} [%I_{cu}]	I_{cu} [kA]	I_{cs} [%I_{cu}]	3 Poles	4 Poles
65	25	14	65	100	36	100	36	100	10	100	36	100	36	100	140G-J2X3	140G-J2X4
100	35	18	85	100	50	100	50	100	12	100	50	100	50	100	140G-J3X3	140G-J3X4
150	65	25	100	100	70	100	65	100	15	100	70	100	70	100	140G-J6X3	140G-J6X4
200	100	35	150	100	120	100	100	100	20	100	85	100	85	100	140G-J0X3	140G-J0X4
Current-limiting Breaking Frames																
150	65	25	100	100	70	100	65	100	15	100	70	100	70	100	140G-JC6X3	–
200	100	35	150	100	120	100	100	100	20	100	85	100	85	100	140G-JC0X3	–

(1) DC rating applies to thermal-magnetic trip unit only.

Table 36 - Trip Units, Thermal-magnetic

Rated Current I_n [A]	Thermal Trip I_r [A]	Magnetic Trip I_m [A]	Protection Type	Cat. No.	
				3 Poles	4 Poles
25	25	400	C (Fixed)	140G-JTC3-C25	140G-JTC4-C25
30	30	400	C (Fixed)	140G-JTC3-C30	140G-JTC4-C30
32	32	400	C (Fixed)	140G-JTC3-C32	140G-JTC4-C32
35	35	400	C (Fixed)	140G-JTC3-C35	140G-JTC4-C35
40	40	400	C (Fixed)	140G-JTC3-C40	140G-JTC4-C40
50	50	500	C (Fixed)	140G-JTC3-C50	140G-JTC4-C50
60	60	600	C (Fixed)	140G-JTC3-C60	140G-JTC4-C60
63	63	630	C (Fixed)	140G-JTC3-C63	140G-JTC4-C63
70	70	700	C (Fixed)	140G-JTC3-C70	140G-JTC4-C70
80	56...80 [1]	400...800 [2]	F (Adjustable)	140G-JTF3-C80	140G-JTF4-C80
90	63...90 [1]	450...900 [2]	F (Adjustable)	140G-JTF3-C90	140G-JTF4-C90
100	70...100 [1]	500...1000 [2]	F (Adjustable)	140G-JTF3-D10	140G-JTF4-D10
110	77...110 [1]	550...1100 [2]	F (Adjustable)	140G-JTF3-D11	140G-JTF4-D11
125	87.5...125 [1]	625...1250 [2]	F (Adjustable)	140G-JTF3-D12	140G-JTF4-D12
150	105...150 [1]	750...1500 [2]	F (Adjustable)	140G-JTF3-D15	140G-JTF4-D15
160	112...160 [1]	800...1600 [2]	F (Adjustable)	140G-JTF3-D16	140G-JTF4-D16
175	122.5...175 [1]	875...1750 [2]	F (Adjustable)	140G-JTF3-D17	140G-JTF4-D17
200	140...200 [1]	1000...2000 [2]	F (Adjustable)	140G-JTF3-D20	140G-JTF4-D20
225	157.5...225 [1]	1125...2250 [2]	F (Adjustable)	140G-JTF3-D22	140G-JTF4-D22
250	175...250 [1]	1250...2500 [2]	F (Adjustable)	140G-JTF3-D25	140G-JTF4-D25

(1) Adjustable thermal trip with nine possible settings. The table shows min and max values.
(2) Adjustable magnetic trip with nine possible settings. The table shows min and max values.

Table 37 - Trip Units, Electronic LSI (Long, Short, Instantaneous)

Rated Current I_n [A]	Protection Type					Cat. No.	Cat. No.
	L		S		I	3 Poles	4 Poles
	I_1=0.4...1 x I_n	t_1=s	I_2=1...10 x I_n	t_2=s	I_3=1...10 x I_n		
40	16...40	3, 12, 36, 60	40...400	0.05, 0.1, 0.2, 0.4	40...400	140G-JTH3-C40	140G-JTH4-C40
60	24...60	3, 12, 36, 60	60...600	0.05, 0.1, 0.2, 0.4	60...600	140G-JTH3-C60	140G-JTH4-C60
100	40...100	3, 12, 36, 60	100...1000	0.05, 0.1, 0.2, 0.4	100...1000	140G-JTH3-D10	140G-JTH4-D10
150	60...150	3, 12, 36, 60	150...1500	0.05, 0.1, 0.2, 0.4	150...1500	140G-JTH3-D15	140G-JTH4-D15
250	100...250	3, 12, 36, 60	250...2500	0.05, 0.1, 0.2, 0.4	250...2500	140G-JTH3-D25	140G-JTH4-D25

Table 38 - Trip Units, Electronic LSIG (Long, Short, Instantaneous, Ground Fault)

Rated Current I_n [A]	Protection Type							Cat. No.	Cat. No.
	L		S		I	G		3 Poles	4 Poles
	I_1=0.4...1 x I_n	t_1=s	I_2=1...10 x I_n	t_2=s	I_3=1...10 x I_n	I_4=0.2...1 x I_n	t_4=s		
40	16...40	3, 12, 36, 60	40...400	0.05, 0.1, 0.2, 0.4	40...400	8...40	0.1, 0.2, 0.4, 0.8	140G-JTI3-C40	140G-JTI4-C40
60	24...60	3, 12, 36, 60	60...600	0.05, 0.1, 0.2, 0.4	60...600	12...60	0.1, 0.2, 0.4, 0.8	140G-JTI3-C60	140G-JTI4-C60
100	40...100	3, 12, 36, 60	100...1000	0.05, 0.1, 0.2, 0.4	100...1000	20...100	0.1, 0.2, 0.4, 0.8	140G-JTI3-D10	140G-JTI4-D10
150	60...150	3, 12, 36, 60	150...1500	0.05, 0.1, 0.2, 0.4	150...1500	30...150	0.1, 0.2, 0.4, 0.8	140G-JTI3-D15	140G-JTI4-D15
250	100...250	3, 12, 36, 60	250...2500	0.05, 0.1, 0.2, 0.4	250...2500	50...250	0.1, 0.2, 0.4, 0.8	140G-JTI3-D25	140G-JTI4-D25

Assembled Molded Case Circuit Breakers — 250 A J-Frame

Table 39 - Interrupting Rating/Breaking Capacity — Thermal-magnetic Circuit Breakers

Interrupting Rating (50/60 Hz), UL 489/CSA 22.2, No. 5 [kA]			Breaking Capacity (50/60 Hz), IEC 60947-2 I_{cu} [kA]/I_{cs} %								Breaking Capacity (DC), IEC 60947-2 (1)				Interrupting Code(2) (3)
240V	480V	600V	220V		415V		440V		690V		250V DC (2 poles in series)		500V DC (3 poles in series)		
			I_{cu} [kA]	I_{cs} [%I_{cu}]	I_{cu} [kA]	I_{cs} [%I_{cu}]	I_{cu} [kA]	I_{cs} [%I_{cu}]	I_{cu} [kA]	I_{cs} [%I_{cu}]	I_{cu} [kA]	I_{cs} [%I_{cu}]	I_{cu} [kA]	I_{cs} [%I_{cu}]	
65	25	14	65	100	36	100	36	100	10	100	36	100	36	100	J2
100	35	18	85	100	50	100	50	100	12	100	50	100	50	100	J3
150	65	25	100	100	70	100	65	100	15	100	70	100	70	100	J6
200	100	35	150	100	120	100	100	100	20	100	85	100	85	100	J0

(1) DC rating applies to thermal-magnetic trip unit only.
(2) See Table 40 and Table 41 for Cat. No. selection.
(3) Add a "C" after the "J" in the interrupting code to select 3-pole current-limiting devices. Example, Cat. No. 140G-JC6...

Table 40 - Thermal-magnetic, Fixed and Adjustable

Rated Current I_n [A]	Thermal Trip I_r [A]	Magnetic Trip I_m [A]	Interrupting Code J2		Interrupting Code J3	
			Cat. No.		Cat. No.	
			3 Poles	4 Poles	3 Poles	4 Poles
25	25	400	140G-J2C3-C25	140G-J2C4-C25	140G-J3C3-C25	140G-J3C4-C25
30	30	400	140G-J2C3-C30	140G-J2C4-C30	140G-J3C3-C30	140G-J3C4-C30
32	32	400	140G-J2C3-C32	140G-J2C4-C32	140G-J3C3-C32	140G-J3C4-C32
35	35	400	140G-J2C3-C35	140G-J2C4-C35	140G-J3C3-C35	140G-J3C4-C35
40	40	400	140G-J2C3-C40	140G-J2C4-C40	140G-J3C3-C40	140G-J3C4-C40
50	50	500	140G-J2C3-C50	140G-J2C4-C50	140G-J3C3-C50	140G-J3C4-C50
60	60	600	140G-J2C3-C60	140G-J2C4-C60	140G-J3C3-C60	140G-J3C4-C60
63	63	630	140G-J2C3-C63	140G-J2C4-C63	140G-J3C3-C63	140G-J3C4-C63
70	70	700	140G-J2C3-C70	140G-J2C4-C70	140G-J3C3-C70	140G-J3C4-C70
80	56...80 (1)	400...800 (2)	140G-J2F3-C80	140G-J2F4-C80	140G-J3F3-C80	140G-J3F4-C80
90	63...90 (1)	450...900 (2)	140G-J2F3-C90	140G-J2F4-C90	140G-J3F3-C90	140G-J3F4-C90
100	70...100	500...1000	140G-J2F3-D10	140G-J2F4-D10	140G-J3F3-D10	140G-J3F4-D10
110	77...110	550...1100	140G-J2F3-D11	140G-J2F4-D11	140G-J3F3-D11	140G-J3F4-D11
125	87.5...125	625...1250	140G-J2F3-D12	140G-J2F4-D12	140G-J3F3-D12	140G-J3F4-D12
150	105...150	750...1500	140G-J2F3-D15	140G-J2F4-D15	140G-J3F3-D15	140G-J3F4-D15
160	112...160	800...1600	140G-J2F3-D16	140G-J2F4-D16	140G-J3F3-D16	140G-J3F4-D16
175	122.5...175	875...1750	140G-J2F3-D17	140G-J2F4-D17	140G-J3F3-D17	140G-J3F4-D17
200	140...200	1000...2000	140G-J2F3-D20	140G-J2F4-D20	140G-J3F3-D20	140G-J3F4-D20
225	157.5...225	1125...2250	140G-J2F3-D22	140G-J2F4-D22	140G-J3F3-D22	140G-J3F4-D22
250	175...250	1250...2500	140G-J2F3-D25	140G-J2F4-D25	140G-J3F3-D25	140G-J3F4-D25

(1) Adjustable thermal trip with nine possible settings. The table shows min and max values.
(2) Adjustable magnetic trip with nine possible settings. The table shows min and max values.

Table 41 - Thermal-magnetic, Fixed and Adjustable

Rated Current I_n [A]	Thermal Trip I_r [A]	Magnetic Trip I_m [A]	Interrupting Code J6		Interrupting Code J0	
			Cat. No.(1)		Cat. No.(1)	
			3 Poles	4 Poles	3 Poles	4 Poles
25	25	400	140G-J6C3-C25	140G-J6C4-C25	140G-J0C3-C25	140G-J0C4-C25
30	30	400	140G-J6C3-C30	140G-J6C4-C30	140G-J0C3-C30	140G-J0C4-C30
32	32	400	140G-J6C3-C32	140G-J6C4-C32	140G-J0C3-C32	140G-J0C4-C32
35	35	400	140G-J6C3-C35	140G-J6C4-C35	140G-J0C3-C35	140G-J0C4-C35
40	40	400	140G-J6C3-C40	140G-J6C4-C40	140G-J0C3-C40	140G-J0C4-C40
50	50	500	140G-J6C3-C50	140G-J6C4-C50	140G-J0C3-C50	140G-J0C4-C50
60	60	600	140G-J6C3-C60	140G-J6C4-C60	140G-J0C3-C60	140G-J0C4-C60
63	63	630	140G-J6C3-C63	140G-J6C4-C63	140G-J0C3-C63	140G-J0C4-C63
70	70	700	140G-J6C3-C70	140G-J6C4-C70	140G-J0C3-C70	140G-J0C4-C70
80	56...80 (2)	400...800 (3)	140G-J6F3-C80	140G-J6F4-C80	140G-J0F3-C80	140G-J0F4-C80
90	63...90 (2)	450...900 (3)	140G-J6F3-C90	140G-J6F4-C90	140G-J0F3-C90	140G-J0F4-C90
100	70...100 (2)	500...1000 (3)	140G-J6F3-D10	140G-J6F4-D10	140G-J0F3-D10	140G-J0F4-D10
110	77...110 (2)	550...1100 (3)	140G-J6F3-D11	140G-J6F4-D11	140G-J0F3-D11	140G-J0F4-D11
125	87.5...125 (2)	625...1250 (3)	140G-J6F3-D12	140G-J6F4-D12	140G-J0F3-D12	140G-J0F4-D12
150	105...150 (2)	750...1500 (3)	140G-J6F3-D15	140G-J6F4-D15	140G-J0F3-D15	140G-J0F4-D15
160	112...160 (2)	800...1600 (3)	140G-J6F3-D16	140G-J6F4-D16	140G-J0F3-D16	140G-J0F4-D16
175	122.5...175 (2)	875...1750 (3)	140G-J6F3-D17	140G-J6F4-D17	140G-J0F3-D17	140G-J0F4-D17
200	140...200 (2)	1000...2000 (3)	140G-J6F3-D20	140G-J6F4-D20	140G-J0F3-D20	140G-J0F4-D20
225	157.5...225 (2)	1125...2250 (3)	140G-J6F3-D22	140G-J6F4-D22	140G-J0F3-D22	140G-J0F4-D22
250	175...250 (2)	1250...2500 (3)	140G-J6F3-D25	140G-J6F4-D25	140G-J0F3-D25	140G-J0F4-D25

(1) Add a "C" after the "J" in the interrupting code to select 3-pole current-limiting devices. Example, Cat. No. 140G-JC6F3-D25
(2) Adjustable thermal trip with nine possible settings. The table shows min and max values.
(3) Adjustable magnetic trip with nine possible settings. The table shows min and max values.

Table 42 - Interrupting Rating/Breaking Capacity — Electronic Circuit Breakers

Interrupting Rating (50/60 Hz), UL 489/ CSA C22.2, No. 5 [kA]			Breaking Capacity (50/60 Hz), IEC 60947-2 I_{cu} [kA]/I_{cs} %								Interrupting Code(1) (2)
240V	480V	600V	220V		415V		440V		690V		
			I_{cu} [kA]	I_{cs}[%I_{cu}]	I_{cu} [kA]	I_{cs}[%I_{cu}]	I_{cu} [kA]	I_{cs}[%I_{cu}]	I_{cu} [kA]	I_{cs}[%I_{cu}]	
65	25	14	65	100	36	100	36	100	10	100	J2
100	35	18	85	100	50	100	50	100	12	100	J3
150	65	25	100	100	70	100	65	100	15	100	J6
200	100	35	150	100	120	100	100	100	20	100	J0

(1) See Table 43 through Table 46 for Cat. No. selection.
(2) Add a "C" after the "J" in the interrupting code to select 3-pole current-limiting devices. Example, Cat. No. 140G-JC6...

Table 43 - Electronic LSI (Long, Short, Instantaneous)

Rated Current I_n [A]	Protection Type					Interrupting Code J2		Interrupting Code J3	
	L		S		I	Cat. No.		Cat. No.	
	I_1=0.4...1 x I_n	t_1=s	I_2=1...10 x I_n	t_2=s	I_3=1...10 x I_n	3 Poles	4 Poles	3 Poles	4 Poles
40	16...40	3, 12, 36, 60	40...400	0.05, 0.1, 0.2, 0.4	40...400	140G-J2H3-C40	140G-J2H4-C40	140G-J3H3-C40	140G-J3H4-C40
60	24...60	3, 12, 36, 60	60...600	0.05, 0.1, 0.2, 0.4	60...600	140G-J2H3-C60	140G-J2H4-C60	140G-J3H3-C60	140G-J3H4-C60
100	40...100	3, 12, 36, 60	100...1000	0.05, 0.1, 0.2, 0.4	100...1000	140G-J2H3-D10	140G-J2H4-D10	140G-J3H3-D10	140G-J3H4-D10
150	60...150	3, 12, 36, 60	150...1500	0.05, 0.1, 0.2, 0.4	150...1500	140G-J2H3-D15	140G-J2H4-D15	140G-J3H3-D15	140G-J3H4-D15
250	100...250	3, 12, 36, 60	250...2500	0.05, 0.1, 0.2, 0.4	250...2500	140G-J2H3-D25	140G-J2H4-D25	140G-J3H3-D25	140G-J3H4-D25

Table 44 - Electronic LSI (Long, Short, Instantaneous)

Rated Current I_n [A]	Protection Type					Interrupting Code J6		Interrupting Code J0	
	L		S		I	Cat. No.(1)		Cat. No.(1)	
	I_1=0.4...1 x I_n	t_1=s	I_2=1...10 x I_n	t_2=s	I_3=1...10 x I_n	3 Poles	4 Poles	3 Poles	4 Poles
40	16...40	3, 12, 36, 60	40...400	0.05, 0.1, 0.2, 0.4	40...400	140G-J6H3-C40	140G-J6H4-C40	140G-J0H3-C40	140G-J0H4-C40
60	24...60	3, 12, 36, 60	60...600	0.05, 0.1, 0.2, 0.4	60...600	140G-J6H3-C60	140G-J6H4-C60	140G-J0H3-C60	140G-J0H4-C60
100	40...100	3, 12, 36, 60	100...1000	0.05, 0.1, 0.2, 0.4	100...1000	140G-J6H3-D10	140G-J6H4-D10	140G-J0H3-D10	140G-J0H4-D10
150	60...150	3, 12, 36, 60	150...1500	0.05, 0.1, 0.2, 0.4	150...1500	140G-J6H3-D15	140G-J6H4-D15	140G-J0H3-D15	140G-J0H4-D15
250	100...250	3, 12, 36, 60	250...2500	0.05, 0.1, 0.2, 0.4	250...2500	140G-J6H3-D25	140G-J6H4-D25	140G-J0H3-D25	140G-J0H4-D25

(1) Add a "C" after the "J" in the interrupting code to select 3-pole current-limiting devices. Example, Cat. No. 140G-JC6H3-D25

Table 45 - Electronic LSIG (Long, Short, Instantaneous, Ground Fault)

Rated Current I_n [A]	Protection Type							Interrupting Code J2		Interrupting Code J3	
	L		S		I	G		Cat. No.		Cat. No.	
	I_1=0.4... 1 x I_n	t_1=s	I_2=1... 10 x I_n	t_2=s	I_3=1... 10 x I_n	I_4=0.2...1 x I_n	t_4=s	3 Poles	4 Poles	3 Poles	4 Poles
40	16...40	3, 12, 36, 60	40...400	0.05, 0.1, 0.2, 0.4	40...400	8...40	0.1, 0.2, 0.4, 0.8	140G-J2I3-C40	140G-J2I4-C40	140G-J3I3-C40	140G-J3I4-C40
60	24...60	3, 12, 36, 60	60...600	0.05, 0.1, 0.2, 0.4	60...600	12...60	0.1, 0.2, 0.4, 0.8	140G-J2I3-C60	140G-J2I4-C60	140G-J3I3-C60	140G-J3I4-C60
100	40...100	3, 12, 36, 60	100...1000	0.05, 0.1, 0.2, 0.4	100...1000	20...100	0.1, 0.2, 0.4, 0.8	140G-J2I3-D10	140G-J2I4-D10	140G-J3I3-D10	140G-J3I4-D10
150	60...150	3, 12, 36, 60	150...1500	0.05, 0.1, 0.2, 0.4	150...1500	30...150	0.1, 0.2, 0.4, 0.8	140G-J2I3-D15	140G-J2I4-D15	140G-J3I3-D15	140G-J3I4-D15
250	100...250	3, 12, 36, 60	250...2500	0.05, 0.1, 0.2, 0.4	250...2500	50...250	0.1, 0.2, 0.4, 0.8	140G-J2I3-D25	140G-J2I4-D25	140G-J3I3-D25	140G-J3I4-D25

Table 46 - Electronic LSIG (Long, Short, Instantaneous, Ground Fault)

Rated Current I_n [A]	Protection Type							Interrupting Code J6		Interrupting Code J0	
	L		S		I	G		Cat. No.(1)		Cat. No.(1)	
	I_1=0.4... 1 x I_n	t_1=s	I_2=1... 10 x I_n	t_2=s	I_3=1... 10 x I_n	I_4=0.2...1 x I_n	t_4=s	3 Poles	4 Poles	3 Poles	4 Poles
40	16...40	3, 12, 36, 60	40...400	0.05, 0.1, 0.2, 0.4	40...400	8...40	0.1, 0.2, 0.4, 0.8	140G-J6I3-C40	140G-J6I4-C40	140G-J0I3-C40	140G-J0I4-C40
60	24...60	3, 12, 36, 60	60...600	0.05, 0.1, 0.2, 0.4	60...600	12...60	0.1, 0.2, 0.4, 0.8	140G-J6I3-C60	140G-J6I4-C60	140G-J0I3-C60	140G-J0I4-C60
100	40...100	3, 12, 36, 60	100...1000	0.05, 0.1, 0.2, 0.4	100...1000	20...100	0.1, 0.2, 0.4, 0.8	140G-J6I3-D10	140G-J6I4-D10	140G-J0I3-D10	140G-J0I4-D10
150	60...150	3, 12, 36, 60	150...1500	0.05, 0.1, 0.2, 0.4	150...1500	30...150	0.1, 0.2, 0.4, 0.8	140G-J6I3-D15	140G-J6I4-D15	140G-J0I3-D15	140G-J0I4-D15
250	100...250	3, 12, 36, 60	250...2500	0.05, 0.1, 0.2, 0.4	250...2500	50...250	0.1, 0.2, 0.4, 0.8	140G-J6I3-D25	140G-J6I4-D25	140G-J0I3-D25	140G-J0I4-D25

(1) Add a "C" after the "J" in the interrupting code to select 3-pole current-limiting devices. Example, Cat. No. 140G-JC6I3-D25

400 A, K-Frame Molded Case Circuit Breakers

Catalog Number Explanation

Examples that are given in this section are not intended to be used for product selection. Not all combinations generate a valid catalog number. Use ProposalWorks™ software to configure the MCCB. ProposalWorks software is available from rok.auto/systemtools.

K-Frame MCCBs are available both as assembled circuit breakers and individual breaking frame and trip unit components that can be ordered for field assembly or factory installation.

Terminal lugs are not supplied and can be ordered separately. See page 93 for available lugs.

140G	-	K	3	F	3	-	D30	-	Z1	-	SD	-	AA
a		b	c	d	e		f		g		h		h

a	
Bulletin Number	
Code	**Description**
140G	Global Molded Case Circuit Breaker

b	
Frame/Rating	
Code	**Description**
K	400 A
KC	400 A, current limiting

c	
Interrupting Rating/Breaking Capacity (based on I_c at 480V)	
Code	**Description**
3	35 kA
6	65 kA
0	100 kA
15	150 kA
T	Trip unit

d	
Protection Type	
Code	**Description**
F	Adjust thermal/ adjust magnetic
H	Electronic LSI -long, short, instant
I	Electronic LSIG -long, short instant, and ground fault
K	Electronic LSIG-MM -long, short, instant, ground fault, and MM
S	Molded case switch (isolator)
X	Breaking frame

e	
No. of Poles	
Code	**Description**
3	3 poles
4	4 poles

f	
Rated Current	
Code	**Description**
D30	300 A
D40	400 A
Blank	Frame only

g	
Continuous Rated(1)	
Code	**Description**
Blank	80% Rated
Z1	100% Rated

h
Factory-installed Options—see page 78

(1) For more information about 80% and 100% ratings, see page 17.

Breaking Frames and Trip Units

Frame

+

Trip Unit

=

MCCB

Table 47 - Breaking Frames, 400 A Rated Current

Interrupting Rating (50/60 Hz), UL 489/CSA 22.2, No. 5 [kA]					Breaking Capacity (50/60 Hz), IEC 60947-2 I_{cu} [kA]/I_{cs} %								Breaking Capacity (DC), IEC 60947-2 (1)		Cat. No.	
240V	480V	600V	2 poles in series	3 poles in series	220V		415V		440V		690V		500V DC (3 poles in series)			
			500V DC(1)	600V DC(1)	I_{cu} [kA]	I_{cs} [%I_{cu}]	I_{cu} [kA]	I_{cs} [%I_{cu}]	I_{cu} [kA]	I_{cs} [%I_{cu}]	I_{cu} [kA]	I_{cs} [%I_{cu}]	I_{cu} [kA]	I_{cs} [%I_{cu}]	3 Poles	4 Poles
100	35	25	35	25	85	100	50	100	40	100	25	100	36	100	140G-K3X3	140G-K3X4
150	65	35	50	35	100	100	70	100	65	100	40	100	50	100	140G-K6X3	140G-K6X4
200	100	65	65	50	200	100	120	100	100	100	70	100	70	100	140G-K0X3	140G-K0X4
200	150	100	100	65	200	100	200	100	180	100	80	100	100	100	140G-K15X3	140G-K15X4
Current-limiting Breaking Frames																
150	65	35	50	35	100	100	70	100	65	100	40	100	50	100	140G-KC6X3	–
200	100	65	65	50	200	100	120	100	100	100	70	100	70	100	140G-KC0X3	–

(1) DC rating applies to thermal-magnetic trip unit only.

Table 48 - Breaking Frames, 400 A Rated Current, 100% Rated(1)

Interrupting Rating (50/60 Hz), UL 489/CSA 22.2, No. 5 [kA]					Breaking Capacity (50/60 Hz), IEC 60947-2 I_{cu} [kA]/I_{cs} %								Breaking Capacity (DC), IEC 60947-2 (2)		Cat. No.
240V	480V	600V	2 poles in series	3 poles in series	220V		415V		440V		690V		500V DC (3 poles in series)		
			500V DC(1)	600V DC(1)	I_{cu} [kA]	I_{cs} [%I_{cu}]	I_{cu} [kA]	I_{cs} [%I_{cu}]	I_{cu} [kA]	I_{cs} [%I_{cu}]	I_{cu} [kA]	I_{cs} [%I_{cu}]	I_{cu} [kA]	I_{cs} [%I_{cu}]	3 Poles
100	35	25	35	25	85	100	50	100	40	100	25	100	36	100	140G-K3X3-Z1
Current-limiting Breaking Frames															
150	65	35	50	35	100	100	70	100	65	100	40	100	50	100	140G-KC6X3-Z1
200	100	65	65	50	200	100	120	100	100	100	70	100	70	100	140G-KC0X3-Z1

(1) For more information about 80% and 100% ratings, see page 17.
(2) DC rating applies to thermal-magnetic trip unit only.

Table 49 - Trip Units, Thermal-magnetic

Rated Current I_n [A]	Thermal Trip I_r [A] (1)	Magnetic Trip I_m [A] (2)	Protection Type	Cat. No.	
				3 Poles	4 Poles
300	210...300	1500...3000	F (Adjustable Thermal/ Adjustable Magnetic)	140G-KTF3-D30	140G-KTF4-D30
400	280...400	2000...4000	F (Adjustable Thermal/ Adjustable Magnetic)	140G-KTF3-D40	140G-KTF4-D40

(1) Adjustable thermal trip with nine possible settings. The table shows min and max values.
(2) Adjustable magnetic trip with nine possible settings. The table shows min and max values.

Table 50 - Trip Units, Electronic LSI (Long, Short, Instantaneous)

Rated Current I_n [A]	Protection Type					Cat. No.	
	L		S		I	3 Poles	4 Poles
	I_1=0.4...1 x I_n	t_1=s	I_2=1...10 x I_n	t_2=s	I_3=1...10 x I_n		
300	120...300	3, 6, 9, 18	180...3000	0.05, 0.1, 0.25, 0.5	450...3600	140G-KTH3-D30	140G-KTH4-D30
400	160...400	3, 6, 9, 18	240...4000	0.05, 0.1, 0.25, 0.5	600...4800	140G-KTH3-D40	140G-KTH4-D40

Table 51 - Trip Units, Electronic LSIG (Long, Short, Instantaneous, Ground Fault)

Rated Current I_n [A]	Protection Type							Cat. No.	Cat. No.
	L		S		I	G		3 Poles	4 Poles
	I_1=0.4...1 x I_n	t_1=s	I_2=1...10 x I_n	t_2=s	I_3=1...10 x I_n	I_4=0.2...1 x I_n	t_4=s		
300	120...300	3, 6, 9, 18	180...3000	0.05, 0.1, 0.25, 0.5	450...3600	60...300	0.1, 0.2, 0.4, 0.8	140G-KTI3-D30	140G-KTI4-D30
400	160...400	3, 6, 9, 18	240...4000	0.05, 0.1, 0.25, 0.5	600...4800	80...400	0.1, 0.2, 0.4, 0.8	140G-KTI3-D40	140G-KTI4-D40

Table 52 - Trip Units, Electronic LSIG-MM (Long, Short, Instantaneous, Ground Fault - Maintenance Mode)(1)

Rated Current I_n [A]	Protection Type								Cat. No.	
	L		S		I	G		MM	3 Poles	4 Poles
	I_1=0.4...1 x I_n	t_1=s	I_2=1...10 x I_n	t_2=s	I_3=1...10 x I_n	I_4=0.2...1 x I_n	t_4=s	I_5=1.5...4 x I_n		
300	120...300	3, 6, 9, 18	180...3000	0.05, 0.1, 0.25, 0.5	450...3600	60...300	0.1, 0.2, 0.4, 0.8	450...1200	140G-KTK3-D30	140G-KTK4-D30
400	160...400	3, 6, 9, 18	240...4000	0.05, 0.1, 0.25, 0.5	600...4800	80...400	0.1, 0.2, 0.4, 0.8	600...1600	140G-KTK3-D40	140G-KTK4-D40

(1) See page 28 for a list of the preset values for Maintenance Mode.

Assembled Molded Case Circuit Breakers — 400 A K-Frame

Table 53 - Interrupting Rating/Breaking Capacity — Thermal-magnetic Circuit Breakers

Interrupting Rating (50/60 Hz) UL 489/CSA 22.2, No. 5 [kA]					Breaking Capacity (50/60 Hz), IEC 60947-2 I_{cu} [kA]/I_{cs} %								Breaking Capacity (DC), IEC 60947-2 (1)		Interrupting Code(2) (3)
240V	480V	600V	2 poles in series	3 poles in series	220V		415V		440V		690V		500V DC (3 poles in series)		
			500V DC	600V DC	I_{cu} [kA]	I_{cs} [%I_{cu}]	I_{cu} [kA]	I_{cs} [%I_{cu}]	I_{cu} [kA]	I_{cs} [%I_{cu}]	I_{cu} [kA]	I_{cs} [%I_{cu}]	I_{cu} [kA]	I_{cs} [%I_{cu}]	
100	35	25	35	25	85	100	50	100	40	100	25	100	36	100	K3
150	65	35	50	35	100	100	70	100	65	100	40	100	50	100	K6
200	100	65	65	50	200	100	120	100	100	100	70	100	70	100	K0
200	150	100	100	65	200	100	200	100	180	100	80	100	100	100	K15

(1) DC rating applies to thermal-magnetic trip unit only.
(2) See Table 54 and Table 55 for Cat. No. selection.
(3) Add a "C" after the "K" in the interrupting code to select 3-pole current-limiting devices. Example, Cat. No. 140G-KC6...

Table 54 - Thermal-magnetic, Adjustable

Rated Current I_n [A]	Thermal Trip I_r [A] (1)	Magnetic Trip I_m [A] (2)	Protection Type	Interrupting Code K3		Interrupting Code K6	
				Cat. No.		Cat. No.(3)	
				3 Poles	4 Poles	3 Poles	4 Poles
300	210...300	1500...3000	F (Adjustable Thermal/ Adjustable Magnetic)	140G-K3F3-D30	140G-K3F4-D30	140G-K6F3-D30	140G-K6F4-D30
400	280...400	2000...4000	F (Adjustable Thermal/ Adjustable Magnetic)	140G-K3F3-D40	140G-K3F4-D40	140G-K6F3-D40	140G-K6F4-D40

(1) Adjustable thermal trip with nine possible settings. The table shows min and max values.
(2) Adjustable magnetic trip with nine possible settings. The table shows min and max values.
(3) Add a "C" after the "K" in the interrupting code to select 3-pole current-limiting devices. Example, Cat. No. 140G-KC6F3-D30

Table 55 - Thermal-magnetic, Adjustable

Rated Current I_n [A]	Thermal Trip I_r [A] (1)	Magnetic Trip I_m [A] (2)	Protection Type	Interrupting Code K0		Interrupting Code K15	
				Cat. No.(3)		Cat. No.	
				3 Poles	4 Poles	3 Poles	4 Poles
300	210...300	1500...3000	F (Adjustable Thermal/ Adjustable Magnetic)	140G-K0F3-D30	140G-K0F4-D30	140G-K15F3-D30	140G-K15F3-D30
400	280...400	2000...4000	F (Adjustable Thermal/ Adjustable Magnetic)	140G-K0F3-D40	140G-K0F4-D40	140G-K15F3-D40	140G-K15F3-D40

(1) Adjustable thermal trip with nine possible settings. The table shows min and max values.
(2) Adjustable magnetic trip with nine possible settings. The table shows min and max values.
(3) Add a "C" after the "K" in the interrupting code to select 3-pole current-limiting devices. Example, Cat. No. 140G-KC0F3-D30

Table 56 - Thermal-magnetic, Adjustable, 100% Rated(1)

Rated Current I_n [A]	Thermal Trip I_r [A] (2)	Magnetic Trip I_m [A] (3)	Protection Type	Interrupting Code K3	Interrupting Code K6	Interrupting Code K0
				3 Poles	3 Poles	3 Poles
300	210...300	1500...3000	F (Adjustable Thermal/ Adjustable Magnetic)	140G-K3F3-D30-Z1	140G-K6F3-D30-Z1	140G-K0F3-D30-Z1
400	280...400	2000...4000	F (Adjustable Thermal/ Adjustable Magnetic)	140G-K3F3-D40-Z1	140G-K6F3-D40-Z1	140G-K0F3-D40-Z1

(1) For more information about 80% and 100% ratings, see page 17.
(2) Adjustable thermal trip with nine possible settings. The table shows min and max values.
(3) Adjustable magnetic trip with nine possible settings. The table shows min and max values.

Table 57 - Interrupting Rating/Breaking Capacity — Electronic Circuit Breakers

Interrupting Rating (50/60 Hz) UL 489/CSA 22.2, No. 5 [kA]			Breaking Capacity (50/60 Hz), IEC 60947-2 I_{cu} [kA]/I_{cs} %								Interrupting Code(1) (2)
240V	480V	600V	220V		415V		440V		690V		
			I_{cu} [kA]	I_{cs} [%I_{cu}]	I_{cu} [kA]	I_{cs} [%I_{cu}]	I_{cu} [kA]	I_{cs} [%I_{cu}]	I_{cu} [kA]	I_{cs} [%I_{cu}]	
100	35	25	85	100	50	100	40	100	25	100	K3
150	65	35	100	100	70	100	65	100	40	100	K6
200	100	65	200	100	120	100	100	100	70	100	K0
200	150	100	200	100	200	100	180	100	80	100	K15

(1) See Table 58 through Table 65 for Cat. No. selection.
(2) Add a "C" after the "K" in the interrupting code to select 3-pole current-limiting devices. Example, Cat. No. 140G-KC6...

Table 58 - Electronic LSI (Long, Short, Instantaneous)

Rated Current I_n [A]	Protection Type					Interrupting Code K3		Interrupting Code K6	
	L		S		I	Cat. No.		Cat. No.(1)	
	I_1=0.4...1 x I_n	t_1=s	I_2=1...10 x I_n	t_2=s	I_3=1...10 x I_n	3 Poles	4 Poles	3 Poles	4 Poles
300	120...300	3, 6, 9, 18	180...3000	0.05, 0.1, 0.25, 0.5	450...3600	140G-K3H3-D30	140G-K3H4-D30	140G-K6H3-D30	140G-K6H4-D30
400	160...400	3, 6, 9, 18	240...4000	0.05, 0.1, 0.25, 0.5	600...4800	140G-K3H3-D40	140G-K3H4-D40	140G-K6H3-D40	140G-K6H4-D40

(1) Add a "C" after the "K" in the interrupting code to select 3-pole current-limiting devices. Example, Cat. No. 140G-KC6H3-D30

Table 59 - Electronic LSI (Long, Short, Instantaneous)

Rated Current I_n [A]	Protection Type					Interrupting Code K0		Interrupting Code K15	
	L		S		I	Cat. No.(1)		Cat. No.	
	I_1=0.4...1 x I_n	t_1=s	I_2=1...10 x I_n	t_2=s	I_3=1...10 x I_n	3 Poles	4 Poles	3 Poles	4 Poles
300	120...300	3, 6, 9, 18	180...3000	0.05, 0.1, 0.25, 0.5	450...3600	140G-K0H3-D30	140G-K0H4-D30	140G-K15H3-D30	140G-K15H4-D30
400	160...400	3, 6, 9, 18	240...4000	0.05, 0.1, 0.25, 0.5	600...4800	140G-K0H3-D40	140G-K0H4-D40	140G-K15H3-D40	140G-K15H4-D40

(1) Add a "C" after the "K" in the interrupting code to select 3-pole current-limiting devices. Example, Cat. No. 140G-KC0H3-D30

Table 60 - Electronic LSI (Long, Short, Instantaneous), 100% Rated(1)

Rated Current I_n [A]	Thermal Trip I_r [A] (2)	Magnetic Trip I_m [A] (3)	Protection Type	Interrupting Code K6	Interrupting Code K0
				3 Poles	3 Poles
300	210...300	1500...3000	F (Adjustable Thermal/ Adjustable Magnetic)	140G-K6H3-D30-Z1	140G-K0H3-D30-Z1
400	280...400	2000...4000	F (Adjustable Thermal/ Adjustable Magnetic)	140G-K6H3-D40-Z1	140G-K0H3-D40-Z1

(1) For more information about 80% and 100% ratings, see page 17.
(2) Adjustable thermal trip with nine possible settings. The table shows min and max values.
(3) Adjustable magnetic trip with nine possible settings. The table shows min and max values.

Table 61 - Electronic LSIG (Long, Short, Instantaneous, Ground Fault)

Rated Current I_n [A]	Protection Type							Interrupting Code K3		Interrupting Code K6	
	L		S		I	G		Cat. No.		Cat. No.(1)	
	I_1=0.4...1 x I_n	t_1=s	I_2=1...10 x I_n	t_2=s	I_3=1...10 x I_n	I_4=0.2...1 x I_n	t_4=s	3 Poles	4 Poles	3 Poles	4 Poles
300	120...300	3, 6, 9, 18	180...3000	0.05, 0.1, 0.25, 0.5	450...3600	60...300	0.1, 0.2, 0.4, 0.8	140G-K3I3-D30	140G-K3I4-D30	140G-K6I3-D30	140G-K6I4-D30
400	160...400	3, 6, 9, 18	240...4000	0.05, 0.1, 0.25, 0.5	600...4800	80...400	0.1, 0.2, 0.4, 0.8	140G-K3I3-D40	140G-K3I4-D40	140G-K6I3-D40	140G-K6I4-D40

(1) Add a "C" after the "K" in the interrupting code to select 3-pole current-limiting devices. Example, Cat. No. 140G-KC6I3-D30

Table 62 - Electronic LSIG (Long, Short, Instantaneous, Ground Fault)

Rated Current I_n [A]	Protection Type							Interrupting Code K0		Interrupting Code K15	
	L		S		I	G		Cat. No.(1)		Cat. No.	
	I_1=0.4...1 x I_n	t_1=s	I_2=1...10 x I_n	t_2=s	I_3=1...10 x I_n	I_4=0.2...1 x I_n	t_4=s	3 Poles	4 Poles	3 Poles	4 Poles
300	120...300	3, 6, 9, 18	180...3000	0.05, 0.1, 0.25, 0.5	450...3600	60...300	0.1, 0.2, 0.4, 0.8	140G-K0I3-D30	140G-K0I4-D30	140G-K15I3-D30	140G-K15I4-D30
400	160...400	3, 6, 9, 18	240...4000	0.05, 0.1, 0.25, 0.5	600...4800	80...400	0.1, 0.2, 0.4, 0.8	140G-K0I3-D40	140G-K0I4-D40	140G-K15I3-D40	140G-K15I4-D40

(1) Add a "C" after the "K" in the interrupting code to select 3-pole current-limiting devices. Example, Cat. No. 140G-KC0I3-D30

Table 63 - Electronic LSIG (Long, Short, Instantaneous, Ground Fault), 100% Rated(1)

Rated Current I_n [A]	Thermal Trip I_r [A] (2)	Magnetic Trip I_m [A] (3)	Protection Type	Interrupting Code K3	Interrupting Code K6	Interrupting Code K0
				3 Poles	3 Poles	3 Poles
300	210...300	1500...3000	F (Adjustable Thermal/ Adjustable Magnetic)	140G-K3I3-D30-Z1	140G-K6I3-D30-Z1	140G-K0I3-D30-Z1
400	280...400	2000...4000	F (Adjustable Thermal/ Adjustable Magnetic)	140G-K3I3-D40-Z1	140G-K6I3-D40-Z1	140G-K0I3-D40-Z1

(1) For more information about 80% and 100% ratings, see page 17.
(2) Adjustable thermal trip with nine possible settings. The table shows min and max values.
(3) Adjustable magnetic trip with nine possible settings. The table shows min and max values.

Table 64 - Electronic LSIG-MM (Long, Short, Instantaneous, Ground Fault - Maintenance Mode)(1)

Rated Current I_n [A]	Protection Type								Interrupting Code K3		Interrupting Code K6	
	L		S		I	G		MM	Cat. No.(2)		Cat. No.	
	I_1=0.4...1 x I_n	t_1=s	I_2=1...10 x I_n	t_2=s	I_3=1...10 x I_n	I_4=0.2...1 x I_n	t_4=s	I_5=1.5...4 x I_n	3 Poles	4 Poles	3 Poles	4 Poles
300	120...300	3, 6, 9, 18	180...3000	0.05, 0.1, 0.25, 0.5	450...3600	60...300	0.1, 0.2, 0.4, 0.8	450...1200	140G-K3K3-D30	140G-K3K4-D30	140G-K6K3-D30	140G-K6K4-D30
400	160...400	3, 6, 9, 18	240...4000	0.05, 0.1, 0.25, 0.5	600...4800	80...400	0.1, 0.2, 0.4, 0.8	600...1600	140G-K3K3-D40	140G-K3K4-D40	140G-K6K3-D40	140G-K6K4-D40

(1) See page 28 for a list of the preset values for Maintenance Mode.
(2) Add a "C" after the "K" in the interrupting code to select 3-pole current-limiting devices. Example, Cat. No. 140G-KC6I3-D30

Table 65 - Electronic LSIG-MM (Long, Short, Instantaneous, Ground Fault - Maintenance Mode)[1]

Rated Current I_n [A]	Protection Type								Interrupting Code K0		Interrupting Code K15	
	L		S		I	G		MM	Cat. No.[2]		Cat. No.	
	I_1=0.4...1 x I_n	t_1=s	I_2=1...10 x I_n	t_2=s	I_3=1...10 x I_n	I_4=0.2...1 x I_n	t_4=s	I_5=1.5...4 x I_n	3 Poles	4 Poles	3 Poles	4 Poles
300	120...300	3, 6, 9, 18	180...3000	0.05, 0.1, 0.25, 0.5	450...3600	60...300	0.1, 0.2, 0.4, 0.8	450...1200	140G-K0K3-D30	140G-K0K4-D30	140G-K15K3-D30	140G-K15K4-D30
400	160...400	3, 6, 9, 18	240...4000	0.05, 0.1, 0.25, 0.5	600...4800	80...400	0.1, 0.2, 0.4, 0.8	600...1600	140G-K0K3-D40	140G-K0K4-D40	140G-K15K3-D40	140G-K15K4-D40

(1) See page 28 for a list of the preset values for Maintenance Mode.
(2) Add a "C" after the "K" in the interrupting code to select 3-pole current-limiting devices. Example, Cat. No. 140G-KC6I3-D30

Table 66 - Electronic LSIG-MM (Long, Short, Instantaneous, Ground Fault - Maintenance Mode), 100% Rated[1] [2]

Rated Current I_n [A]	Protection Type								Interrupting Code K3	Interrupting Code K6	Interrupting Code K0
	L		S		I	G		MM	Cat. No.	Cat. No.	Cat. No.
	I_1=0.4...1 x I_n	t_1=s	I_2=1...10 x I_n	t_2=s	I_3=1...10 x I_n	I_4=0.2...1 x I_n	t_4=s	I_5=1.5...4 x I_n	3 Poles	4 Poles	3 Poles
300	120...300	3, 6, 9, 18	180...3000	0.05, 0.1, 0.25, 0.5	450...3600	60...300	0.1, 0.2, 0.4, 0.8	450...1200	140G-K3K3-D30-Z1	140G-K6K3-D30-Z1	140G-K0K3-D30-Z1
400	160...400	3, 6, 9, 18	240...4000	0.05, 0.1, 0.25, 0.5	600...4800	80...400	0.1, 0.2, 0.4, 0.8	600...1600	140G-K3K3-D40-Z1	140G-K6K3-D40-Z1	140G-K0K3-D40-Z1

(1) For more information about 80% and 100% ratings, see page 17.
(2) See page 28 for a list of the preset values for Maintenance Mode.

800 A, M-Frame Molded Case Circuit Breakers

Catalog Number Explanation

Examples that are given in this section are not intended to be used for product selection. Not all combinations generate a valid catalog number. Use ProposalWorks™ software to configure the MCCB. ProposalWorks software is available from rok.auto/systemtools.

M-Frame MCCBs are available both as assembled circuit breakers and individual breaking frame and trip unit components that can be ordered for field assembly or factory installation.

Terminal lugs are not supplied and can be ordered separately. See page 93 for available lugs.

140G	-	M	6	K	3	-	D60	-	Z1	-	SD	-	AA
a		b	c	d	e		f		g		h		h

a	
Bulletin Number	
Code	**Description**
140G	Global Molded Case Circuit Breaker

b	
Frame/Rating	
Code	**Description**
M	800 A

c	
Interrupting Rating/Breaking Capacity (based on I_c at 480V)	
Code	**Description**
5	50 kA
6	65 kA
0	100 kA
T	Trip unit

d	
Protection Type	
Code	**Description**
F	Adjust thermal/ adjust magnetic
H	Electronic LSI -long, short, instant
I	Electronic LSIG -long, short, instant, and ground fault
K	Electronic LSIG-MM -long, short, instant, ground fault, and MM
X	Breaking frame
S	Molded case switch (isolator)

e	
No. of Poles	
Code	**Description**
3	3 poles
4	4 poles

f	
Rated Current	
Code	**Description**
D60	600 A
D63	630 A
D80	800 A
Blank	Frame only

g	
Continuous Rated(1)	
Code	**Description**
Blank	80% Rated
Z1	100% Rated

h
Factory-installed Options—see page 78

(1) For more information about 80% and 100% ratings, see page 17.

Breaking Frames and Trip Units

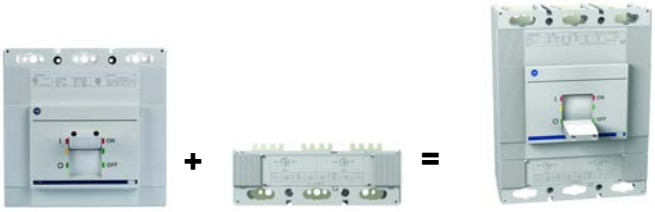

Frame Trip Unit MCCB

Table 67 - Breaking Frames, 800 A Rated Current

Interrupting Rating (50/60 Hz), UL 489/ CSA 22.2, No. 5[kA]				Breaking Capacity (50/60 Hz), IEC 60947-2 I_{cu} [kA]/I_{cs} %						Breaking Capacity (DC), IEC 60947-2 (1)		Cat. No.	
240V	480V	600V	3 poles in series	220V		415V		690V		750V DC (3 poles in series)			
			600V DC(1)	I_{cu} [kA]	I_{cs} [%I_{cu}]	I_{cu} [kA]	I_{cs} [%I_{cu}]	I_{cu} [kA]	I_{cs} [%I_{cu}]	I_{cu} [kA]	I_{cs}[%I_{cu}]	3 Poles	4 Poles
100	50	25	20	85	100	50	100	22	75	16	75	140G-M5X3	140G-M5X4
200	65	35	35	100	100	70	100	25	75	36	75	140G-M6X3	140G-M6X4
200	100	42	50	200	75	100	75	30	75	50	75	140G-M0X3	140G-M0X4

(1) DC rating applies to thermal-magnetic trip unit only.

Table 68 - Breaking Frames, 800 A Rated Current, 100% Rated(1)

Interrupting Rating (50/60 Hz), UL 489/ CSA 22.2, No. 5[kA]				Breaking Capacity (50/60 Hz), IEC 60947-2 I_{cu} [kA]/I_{cs} %						Breaking Capacity (DC), IEC 60947-2 (2)		Cat. No.
240V	480V	600V	3 poles in series	220V		415V		690V		750V DC (3 poles in series)		
			600V DC(1)	I_{cu} [kA]	I_{cs}[%I_{cu}]	I_{cu} [kA]	I_{cs}[%I_{cu}]	I_{cu} [kA]	I_{cs}[%I_{cu}]	I_{cu} [kA]	I_{cs}[%I_{cu}]	3 Poles
100	50	25	20	85	100	50	100	22	75	16	75	140G-M5X3-Z1
200	65	35	35	100	100	70	100	25	75	36	75	140G-M6X3-Z1
200	100	42	50	200	75	100	75	30	75	50	75	140G-M0X3-Z1

(1) For more information about 80% and 100% ratings, see page 17.
(2) DC rating applies to thermal-magnetic trip unit only.

Table 69 - Trip Units, Thermal-magnetic

Rated Current I_n [A]	Thermal Trip I_r [A] (1)	Magnetic Trip I_m [A] (2)	Protection Type	Cat. No.	
				3 Poles	4 Poles
600	420...600	3000...6000	F (Adjustable Thermal/ Adjustable Magnetic)	140G-MTF3-D60	140G-MTF3-D60
800	560...800	4000...8000	F (Adjustable Thermal/ Adjustable Magnetic)	140G-MTF3-D80	140G-MTF4-D80

(1) Adjustable thermal trip with nine possible settings. The table shows min and max values.
(2) Adjustable magnetic trip with nine possible settings. The table shows min and max values.

Table 70 - Trip Units, Electronic LSI (Long, Short, Instantaneous)

Rated Current I_n [A]	Protection Type					Cat. No.	
	L		S		I	3 Poles	4 Poles
	I_1=0.4...1 x I_n	t_1=s	I_2=1...10 x I_n	t_2=s	I_3=1...10 x I_n		
600	240...600	3, 6, 12, 18	360...6000	0.05, 0.1, 0.25, 0.5	900...7200	140G-MTH3-D60	140G-MTH4-D60
800	320...800	3, 6, 9, 18	480...8000	0.05, 0.1, 0.25, 0.5	1200...8400	140G-MTH3-D80	140G-MTH4-D80

Table 71 - Trip Units, Electronic LSIG (Long, Short, Instantaneous, Ground Fault)

Rated Current I_n [A]	Protection Type							Cat. No.	
	L		S		I	G		3 Poles	4 Poles
	I_1=0.4...1 x I_n	t_1=s	I_2=1...10 x I_n	t_2=s	I_3=1...10 x I_n	I_4=0.2...1 x I_n	t_4=s		
600	240...600	3, 6, 12, 18	360...6000	0.05, 0.1, 0.25, 0.5	900...7200	120...600	0.1, 0.2, 0.4, 0.8	140G-MTI3-D60	140G-MTI4-D60
800	320...800	3, 6, 9, 18	480...8000	0.05, 0.1, 0.25, 0.5	1200...8400	160...800	0.1, 0.2, 0.4, 0.8	140G-MTI3-D80	140G-MTI4-D80

Table 72 - Electronic LSIG-MM (Long, Short, Instantaneous, Ground Fault - Maintenance Mode)(1)

Rated Current I_n [A]	Protection Type								Cat. No.	
	L		S		I	G		MM	3 Poles	4 Poles
	I_1=0.4...1 x I_n	t_1=s	I_2=1...10 x I_n	t_2=s	I_3=1...10 x I_n	I_4=0.2...1 x I_n	t_4=s	I_5=1.5...4 x I_n		
600	240...600	3, 6, 12, 18	360...6000	0.05, 0.1, 0.25, 0.5	900...7200	120...600	0.1, 0.2, 0.4, 0.8	900...2400	140G-MTK3-D60	140G-MTK4-D60
800	320...800	3, 6, 9, 18	480...8000	0.05, 0.1, 0.25, 0.5	1200...8400	160...800	0.1, 0.2, 0.4, 0.8	1200...3200	140G-MTK3-D80	140G-MTK4-D80

(1) See page 28 for a list of the preset values for Maintenance Mode.

Assembled Molded Case Circuit Breakers — 800 A, M-Frame

Table 73 - Interrupting Rating/Breaking Capacity — Thermal-magnetic and Electronic Circuit Breakers

Interrupting Rating (50/60 Hz), UL 489/ CSA 22.2, No. 5 [kA]				Breaking Capacity (50/60 Hz), IEC 60947-2 I_{cu} [kA]/I_{cs} %						Breaking Capacity (DC), IEC 60947-2(1)		Interrupting Code(2)
240V	480V	600V	3 poles in series	220V		415V		690V		750V DC (3 poles in series)		
			600V DC(1)	I_{cu} [kA]	I_{cs} [%I_{cu}]	I_{cu} [kA]	I_{cs} [%I_{cu}]	I_{cu} [kA]	I_{cs} [%I_{cu}]	I_{cu} [kA]	I_{cs} [%I_{cu}]	
100	50	25	20	85	100	50	100	22	75	16	75	M5
200	65	35	35	100	100	70	100	25	75	36	75	M6
200	100	42	50	200	75	100	75	30	75	50	75	M0

(1) DC ratings applicable to thermal magnetic trip unit only.
(2) See Table 74 through Table 83 for Cat. No. selection

Table 74 - Thermal-magnetic

Rated Current I_n [A]	Thermal Trip I_r [A] (1)	Magnetic Trip I_m [A] (2)	Protection Type	Interrupting Code M5		Interrupting Code M6		Interrupting Code M0	
				Cat. No.		Cat. No.		Cat. No.	
				3 Poles	4 Poles	3 Poles	4 Poles	3 Poles	4 Poles
600	420...600	3000...6000	F (Adjustable Thermal/ Adjustable Magnetic)	140G-M5F3-D60	140G-M5F4-D60	140G-M6F3-D60	140G-M6F4-D60	140G-M0F3-D60	140G-M0F4-D60
630(3)	441...630	3150...6300		140G-M5F3-D63	140G-M5F4-D63	140G-M6F3-D63	140G-M6F4-D63	140G-M0F3-D63	140G-M0F4-D63
800	560...800	4000...8000		140G-M5F3-D80	140G-M5F4-D80	140G-M6F3-D80	140G-M6F4-D80	140G-M0F3-D80	140G-M0F4-D80

(1) Adjustable thermal trip with nine possible settings. The table shows min and max values.
(2) Adjustable magnetic trip with nine possible settings. The table shows min and max values.
(3) IEC only.

Table 75 - Thermal-magnetic, 100% Rated (1)

Rated Current I_n [A]	Thermal Trip I_r [A] (2)	Magnetic Trip I_m [A] (3)	Protection Type	Interrupting Code M5	Interrupting Code M6	Interrupting Code M0
				Cat. No., 3 Poles	Cat. No., 3 Poles	Cat. No., 3 Poles
600	420...600	3000...6000	F (Adjustable Thermal/ Adjustable Magnetic)	140G-M5F3-D60-Z1	140G-M6F3-D60-Z1	140G-M0F3-D60-Z1
800	560...800	4000...8000		140G-M5F3-D80-Z1	140G-M6F3-D80-Z1	140G-M0F3-D80-Z1

(1) For more information about 80% and 100% ratings, see page 17.
(2) Adjustable thermal trip with nine possible settings. The table shows min and max values.
(3) Adjustable magnetic trip with nine possible settings. The table shows min and max values.

Table 76 - Electronic LSI (Long, Short, Instantaneous)

Rated Current I_n [A]	Protection Type					Interrupting Code M5		Interrupting Code M6	
	L		S		I	Cat. No.		Cat. No.	Cat. No.
	I_1=0.4...1 x I_n	t_1=s	I_2=1...10 x I_n	t_2=s	I_3=(1)	3 Poles	4 Poles	3 Poles	4 Poles
600	240...600	3, 6, 12, 18	360...6000	0.05, 0.1, 0.25, 0.5	900...7200	140G-M5H3-D60	140G-M5H4-D60	140G-M6H3-D60	140G-M6H4-D60
630(2)	252...630	3, 6, 12, 18	378...6300	0.05, 0.1, 0.25, 0.5	945...7560	140G-M5H3-D63	140G-M5H4-D63	140G-M6H3-D63	140G-M6H4-D63
800	320...800	3, 6, 9, 18	480...8000	0.05, 0.1, 0.25, 0.5	1200...8400	140G-M5H3-D80	140G-M5H4-D80	140G-M6H3-D80	140G-M6H4-D80

(1) 600 A, 630 A I_3max =12 I_n; 800 A I_3 max = 10.5 I_n
(2) IEC only.

Table 77 - Electronic LSI (Long, Short, Instantaneous)

Rated Current I_n [A]	Protection Type					Interrupting Code M0	
	L		S		I	Cat. No.	
	I_1=0.4...1 x I_n	t_1=s	I_2=1...10 x I_n	t_2=s	I_3=(1)	3 Poles	4 Poles
600	240...600	3, 6, 12, 18	360...6000	0.05, 0.1, 0.25, 0.5	900...7200	140G-M0H3-D60	140G-M0H4-D60
630(2)	252...630	3, 6, 12, 18	378...6300	0.05, 0.1, 0.25, 0.5	945...7560	140G-M0H3-D63	140G-M0H4-D63
800	320...800	3, 6, 9, 18	480...8000	0.05, 0.1, 0.25, 0.5	1200...8400	140G-M0H3-D80	140G-M0H4-D80

(1) 600 A, 630 A I_3max =12 I_n; 800 A I_3 max = 10.5 I_n
(2) IEC only.

Table 78 - Electronic LSI (Long, Short, Instantaneous), 100% Rated(1)

Rated Current I_n [A]	Protection Type					Interrupting Code M5	Interrupting Code M6	Interrupting Code M0
	L		S		I	Cat. No.	Cat. No.	Cat. No.
	I_1=0.4...1 x I_n	t_1=s	I_2=1...10 x I_n	t_2=s	I_3=(2)	3 Poles	3 Poles	4 Poles
600	240...600	3, 6, 12, 18	360...6000	0.05, 0.1, 0.25, 0.5	900...7200	140G-M5H3-D60-Z1	140G-M6H3-D60-Z1	140G-M0H3-D60-Z1
800	320...800	3, 6, 9, 18	480...8000	0.05, 0.1, 0.25, 0.5	1200...8400	140G-M5H3-D80-Z1	140G-M6H3-D80-Z1	140G-M0H3-D80-Z1

(1) For more information about 80% and 100% ratings, see page 17.
(2) 600 A, 630 A I_3max =12 I_n; 800 A I_3 max = 10.5 I_n

Table 79 - Electronic LSIG (Long, Short, Instantaneous, Ground Fault)

Rated Current I_n [A]	Protection Type							Interrupting Code M5		Interrupting Code M6	
	L		S		I	G		Cat. No.		Cat. No.	
	I_1=0.4... 1 x I_n	t_1=s	I_2=1... 10 x I_n	t_2=s	I_3=(1)	I_4=0.2... 1 x I_n	t_4=s	3 Poles	4 Poles	3 Poles	4 Poles
600	240...600	3, 6, 12, 18	360...6000	0.05, 0.1, 0.25, 0.5	900...7200	120...600	0.1, 0.2, 0.4, 0.8	140G-M5I3-D60	140G-M5I4-D60	140G-M6I3-D60	140G-M6I4-D60
630(2)	252...630	3, 6, 12, 18	378...6300	0.05, 0.1, 0.25, 0.5	945...7560	126...630	0.1, 0.2, 0.4, 0.8	140G-M5I3-D63	140G-M5I4-D63	140G-M6I3-D63	140G-M6I4-D63
800	320...800	3, 6, 9, 18	480...8000	0.05, 0.1, 0.25, 0.5	1200...8400	160...800	0.1, 0.2, 0.4, 0.8	140G-M5I3-D80	140G-M5I4-D80	140G-M6I3-D80	140G-M6I4-D80

(1) 600 A, 630 A I_3max =12 I_n; 800 A I_3 max = 10.5 I_n
(2) IEC only.

Table 80 - Electronic LSIG (Long, Short, Instantaneous, Ground Fault)

Rated Current I_n [A]	Protection Type							Interrupting Code M0	
	L		S		I	G		Cat. No.	
	I_1=0.4...1 x I_n	t_1=s	I_2=1...10 x I_n	t_2=s	I_3=(1)	I_4=0.2...1 x I_n	t_4=s	3 Poles	4 Poles
600	240...600	3, 6, 12, 18	360...6000	0.05, 0.1, 0.25, 0.5	900...7200	120...600	0.1, 0.2, 0.4, 0.8	140G-M0I3-D60	140G-M0I4-D60
630(2)	252...630	3, 6, 12, 18	378...6300	0.05, 0.1, 0.25, 0.5	945...7560	126...630	0.1, 0.2, 0.4, 0.8	140G-M0I3-D63	140G-M0I4-D63
800	320...800	3, 6, 9, 18	480...8000	0.05, 0.1, 0.25, 0.5	1200...8400	160...800	0.1, 0.2, 0.4, 0.8	140G-M0I3-D80	140G-M0I4-D80

(1) 600 A, 630 A I_3max =12 I_n; 800 A I_3 max = 10.5 I_n
(2) IEC only.

Table 81 - Electronic LSIG (Long, Short, Instantaneous, Ground Fault), 100% Rated[1]

Rated Current I_n [A]	Protection Type							Interrupting Code M5	Interrupting Code M6	Interrupting Code M0
	L		S		I	G		Cat. No.	Cat. No.	
	I_1=0.4...1 x I_n	t_1=s	I_2=1...10 x I_n	t_2=s	I_3=[2]	I_4=0.2...1 x I_n	t_4=s	3 Poles	3 Poles	3 Poles
600	240...600	3, 6, 12, 18	360...6000	0.05, 0.1, 0.25, 0.5	900...7200	120...600	0.1, 0.2, 0.4, 0.8	140G-M5I3-D60-Z1	140G-M6I3-D60-Z1	140G-M0I3-D60-Z1
800	320...800	3, 6, 9, 18	480...8000	0.05, 0.1, 0.25, 0.5	1200...8400	160...800	0.1, 0.2, 0.4, 0.8	140G-M5I3-D80-Z1	140G-M6I3-D80-Z1	140G-M0I3-D80-Z1

(1) For more information about 80% and 100% ratings, see page 17.
(2) 600 A, 630 A I_3max =12 I_n; 800 A I_3 max = 10.5 I_n

Table 82 - Electronic LSIG-MM (Long, Short, Instantaneous, Ground Fault - Maintenance Mode)[1]

Rated Current I_n [A]	Protection Type								Interrupting Code M5		Interrupting Code M6	
	L		S		I	G		MM	Cat. No.		Cat. No.	
	I_1=0.4...1 x I_n	t_1=s	I_2=1...10 x I_n	t_2=s	I_3=[2]	I_4=0.2 ...1 x I_n	t_4=s	I_5=1.5...4 x I_n	3 Poles	4 Poles	3 Poles	4 Poles
600	240... 600	3, 6, 12, 18	360... 6000	0.05, 0.1, 0.25, 0.5	900... 7200	120... 600	0.1, 0.2, 0.4, 0.8	900... 2400	140G-M5K3-D60	140G-M5K4-D60	140G-M6K3-D60	140G-M6K4-D60
630[3]	252... 630	3, 6, 12, 18	378... 6300	0.05, 0.1, 0.25, 0.5	945... 7560	126... 630	0.1, 0.2, 0.4, 0.8	945... 2520	140G-M5K3-D63	140G-M5K4-D63	140G-M6K3-D63	140G-M6K4-D63
800	320... 800	3, 6, 9, 18	480... 8000	0.05, 0.1, 0.25, 0.5	1200... 8400	160... 800	0.1, 0.2, 0.4, 0.8	1200... 3200	140G-M5K3-D80	140G-M5K4-D80	140G-M6K3-D80	140G-M6K4-D80

(1) See page 28 for a list of the preset values for Maintenance Mode.
(2) 600 A, 630 A I_3max =12 I_n; 800 A I_3 max = 10.5 I_n
(3) IEC only.

Table 83 - Electronic LSIG-MM (Long, Short, Instantaneous, Ground Fault - Maintenance Mode)[1]

Rated Current I_n [A]	Protection Type								Interrupting Code M0	
	L		S		I	G		MM	Cat. No.	
	I_1=0.4...1 x I_n	t_1=s	I_2=1...10 x I_n	t_2=s	I_3=[2]	I_4=0.2...1 x I_n	t_4=s	I_5=1.5...4 x I_n	3 Poles	4 Poles
600	240...600	3, 6, 12, 18	360...6000	0.05, 0.1, 0.25, 0.5	900...7200	120...600	0.1, 0.2, 0.4, 0.8	900... 2400	140G-M0K3-D60	140G-M0K4-D60
630[3]	252...630	3, 6, 12, 18	378...6300	0.05, 0.1, 0.25, 0.5	945...7560	126...630	0.1, 0.2, 0.4, 0.8	945... 2520	140G-M0K3-D63	140G-M0K4-D63
800	320...800	3, 6, 9, 18	480...8000	0.05, 0.1, 0.25, 0.5	1200...8400	160...800	0.1, 0.2, 0.4, 0.8	1200... 3200	140G-M0K3-D80	140G-M0K4-D80

(1) See page 28 for a list of the preset values for Maintenance Mode.
(2) 600 A, 630 A I_3max =12 I_n; 800 A I_3 max = 10.5 I_n
(3) IEC only.

Table 84 - Electronic LSIG-MM (Long, Short, Instantaneous, Ground Fault - Maintenance Mode), 100% Rated[1][2]

Rated Current I_n [A]	Protection Type								Interrupting Code M5	Interrupting Code M6	Interrupting Code M0
	L		S		I	G		MM	Cat. No.	Cat. No.	Cat. No.
	I_1=0.4...1 x I_n	t_1=s	I_2=1...10 x I_n	t_2=s	I_3=[3]	I_4=0.2...1 x I_n	t_4=s	I_5=1.5... 4 x I_n	3 Poles	3 Poles	3 Poles
600	240... 600	3, 6, 12, 18	360... 6000	0.05, 0.1, 0.25, 0.5	900... 7200	120... 600	0.1, 0.2, 0.4, 0.8	900... 2400	140G-M5K3-D60-Z1	140G-M6K3-D60-Z1	140G-M0K3-D60-Z1
800	320... 800	3, 6, 9, 18	480... 8000	0.05, 0.1, 0.25, 0.5	1200... 8400	160... 800	0.1, 0.2, 0.4, 0.8	1200... 3200	140G-M5K3-D80-Z1	140G-M6K3-D80-Z1	140G-M0K3-D80-Z1

(1) See page 28 for a list of the preset values for Maintenance Mode.
(2) For more information about 80% and 100% ratings, see page 17.
(3) 600 A, 630 A I_3max =12 I_n; 800 A I_3 max = 10.5 I_n

1200 A, N-Frame Molded Case Circuit Breakers

Catalog Number Explanation

Examples that are given in this section are not intended to be used for product selection. Not all combinations generate a valid catalog number. Use ProposalWorks™ software to configure the MCCB. ProposalWorks software is available from rok.auto/systemtools.

N-Frame MCCBs are available as assembled circuit breakers. Individual trip unit components can be ordered for field assembly or as replacement parts.

Terminal lugs are not supplied and can be ordered separately. See page 93 for available lugs.

140G	-	N	5	H	3	-	E12	-		-	SD	-	AB
a		b	c	d	e		f		g		h		h

a	
Bulletin Number	
Code	**Description**
140G	Global Molded Case Circuit Breaker

b	
Frame/Rating	
Code	**Description**
N	1200 A

c	
Interrupting Rating/Breaking Capacity (based on I_c at 480V)	
Code	**Description**
5	50 kA
6	65 kA
0	100 kA
T	Trip unit

d	
Protection Type	
Code	**Description**
H	Electronic LSI-long, short, and instant
I	Electronic LSIG -long, short, instant, and ground fault
K	Electronic LSIG-MM -long, short, instant, ground fault, and MM
S	Molded case switch (isolator)

e	
Poles	
Code	**Description**
3	3 poles
4	4 poles

f	
Rated Current	
Code	**Description**
E12	1200 A trip unit with 1200 A rating plug

g	
Continuous Rated(1)	
Code	**Description**
Blank	80% Rated
Z1	100% Rated

h
Factory-installed Options—see page 78

(1) For more information about 80% and 100% ratings, see page 17.

Assembled Molded Case Circuit Breakers — 1200 A, N-Frame

Table 85 - Interrupting Rating/Breaking Capacity — Electronic Circuit Breakers

Interrupting Rating (50/60 Hz), UL 489/CSA 22.2, No. 5 [kA]			Breaking Capacity (50/60 Hz), IEC 60947-2 I_{cu} [kA]/I_{cs} %										Interrupting Code[1]
240V	480V	600V	220V		415V		440V		500V		690V		
			I_{cu} [kA]	I_{cs} [%I_{cu}]	I_{cu} [kA]	I_{cs} [%I_{cu}]	I_{cu} [kA]	I_{cs} [%I_{cu}]	I_{cu} [kA]	I_{cs} [%I_{cu}]	I_{cu} [kA]	I_{cs} [%I_{cu}]	
65	50	25	85	100	50	100	50	100	40	100	30	100	N5
100	65	50	100	100	70	100	65	100	50	100	42	75	N6
150	100	65	200	100	120	100	100	100	85	75	50	75	N0

(1) See Table 86 through Table 97 for Cat. No. selection

Table 86 - Electronic LSI (Long, Short, Instantaneous)

Rated Current I_n [A]	Protection Type[1]					Interrupting Code N5		Interrupting Code N6	
	L		S		I	Cat. No.		Cat. No.	
	I_1=0.4...1 x I_n	t_1=[t_s] @ 6 x I_1	I_2=0.6... 10 x I_n	t_2=[t_s] @ 10 x I_n	I_3=1.5... 12 x I_n	3 Poles	4 Poles	3 Poles	4 Poles
1200	480...1200	3,6,12,18	OFF, 720...12000	0.1, 0.25, 0.5, 0.8	OFF, 1800...14400	140G-N5H3-E12	140G-N5H4-E12	140G-N6H3-E12	140G-N6H4-E12

(1) Listed I_1, I_2, and I_3 values are based on a 1200 A rating plug value.

Table 87 - Electronic LSI (Long, Short, Instantaneous)

Rated Current I_n [A]	Protection Type[1]					Interrupting Code N0	
	L		S		I	Cat. No.	
	I_1=0.4...1 x I_n	t_1=[t_s] @ 6 x I_1	I_2=0.6... 10 x I_n	t_2=[t_s] @ 10 x I_n	I_3=1.5... 12 x I_n	3 Poles	4 Poles
1200	480...1200	3,6,12,18	OFF, 720...12000	0.1, 0.25, 0.5, 0.8	OFF,1800...14400	140G-N0H3-E12	140G-N0H4-E12

(1) Listed I_1, I_2, and I_3 values are based on a 1200 A rating plug value.

Table 88 - Electronic LSIG (Long, Short, Instantaneous, Ground Fault)

Rated Current I_n [A]	Protection Type[1]							Interrupting Code N5		Interrupting Code N6	
	L		S		I	G		Cat. No.		Cat. No.	
	I_1=0.4... 1 x I_n	t_1=[t_s] @ 6 x I_1	I_2=0.6... 10 x I_n	t_2=[t_s] @ 10 x I_n	I_3=1.5... 12 x I_n	I_4=0.2... 1 x I_n	t_4=s	3 Poles	4 Poles	3 Poles	4 Poles
1200	480...1200	3, 6, 12, 18	OFF, 720... 12000	0.1, 0.25, 0.5, 0.8	OFF, 1800... 18000	OFF, 240...1200	0.1, 0.2, 0.4, 0.8	140G-N5I3-E12	140G-N5I4-E12	140G-N6I3-E12	140G-N6I4-E12

(1) Listed I_1, I_2, I_3, and I_4 values are based on a 1200 A rating plug value.

Table 89 - Electronic LSIG (Long, Short, Instantaneous, Ground Fault)

Rated Current I_n [A]	Protection Type[1]							Interrupting Code N0	
	L		S		I	G		Cat. No.	
	I_1=0.4... 1 x I_n	t_1=[t_s] @ 6 x I_1	I_2=0.6... 10 x I_n	t_2=[t_s] @ 10 x I_n	I_3=1.5... 12 x I_n	I_4=0.2... 1 x I_n	t_4=s	3 Poles	4 Poles
1200	480... 1200	3, 6, 12, 18	OFF, 720...12000	0.1, 0.25, 0.5, 0.8	OFF, 1800...18000	OFF, 240...1200	0.1, 0.2, 0.4,0.8	140G-N0I3-E12	140G-N0I4-E12

(1) Listed I_1, I_2, I_3, and I_4 values are based on a 1200 A rating plug value.

Table 90 - Electronic LSIG-MM (Long, Short, Instantaneous, Ground Fault - Maintenance Mode)(1)

Rated Current I_n [A] (1)	Protection Type(2)							Interrupting Code N5		Interrupting Code N6	
	L		S		I	G		Cat. No.		Cat. No.	
	I_1=0.4... 1 x I_n	t_1=[t_s] @ 6 x I_1	I_2=0.6... 10 x I_n	t_2=[t_s] @ 10 x I_n	I_3=1.5... 12 x I_n	I_4=0.2... 1 x I_n	t_4=s	3 Poles	4 Poles	3 Poles	4 Poles
1200	480...1200	3, 12, 24, 36, 48, 72, 108, 144	OFF, 720... 12000	0.1, 0.25, 0.5, 0.8	OFF, 1800... 18000	OFF, 240...1200	0.1, 0.2, 0.4, 0.8	140G-N5K3-E12	140G-N5K4-E12	140G-N6K3-E12	140G-N6K4-E12

(1) See page 28 for a list of the preset values for Maintenance Mode. and information about maintenance mode adjustment.
(2) Listed I_1, I_2, I_3, and I_4 values are based on a 1200 A rating plug value.

Table 91 - Electronic LSIG-MM (Long, Short, Instantaneous, Ground Fault - Maintenance Mode)(1)

Rated Current I_n [A] (1)	Protection Type(2)								Interrupting Code N0	
	L		S		I	G		MM	Cat. No.	
	I_1=0.4... 1 x I_n	t_1=[t_s] @ 6 x I_1	I_2=0.6... 10 x I_n	t_2=[t_s] @ 10 x I_n	I_3=1.5... 12 x I_n	I_4=0.2...1 x I_n	t_4=s	I_5=1.5...4 x I_n	3 Poles	4 Poles
1200	480...1200	3, 12, 24, 36, 48, 72, 108, 144	OFF, 720...12000	0.1, 0.25, 0.5, 0.8	OFF, 1800...18000	OFF, 240...1200	0.1, 0.2, 0.4, 0.8	1.5...4, 0.1 step	140G-N0K3-E12	140G-N0K4-E12

(1) See page 28 for a list of the preset values for Maintenance Mode. and information about maintenance mode adjustment.
(2) Listed I_1, I_2, I_3, and I_4 values are based on a 1200 A Rating plug value.

Table 92 - Electronic LSI (Long, Short, Instantaneous) - 100% Rated(1)

Rated Current I_n [A]	Protection Type(2)					Interrupting Code N5		Interrupting Code N6	
	L		S		I	Cat. No.		Cat. No.	
	I_1=0.4...1 x I_n	t_1=[t_s] @ 6 x I_1	I_2=0.6... 10 x I_n	t_2=[t_s] @ 10 x I_n	I_3=1.5... 12 x I_n	3 Poles	4 Poles	3 Poles	4 Poles
1200	480...1200	3, 6, 12, 18	OFF, 720...12000	0.1, 0.25, 0.5, 0.8	OFF, 1800... 14400	140G-N5H3-E12-Z1	140G-N5H4-E12-Z1	140G-N6H3-E12-Z1	140G-N6H4-E12-Z1

(1) For more information about 80% and 100% ratings, see page 17
(2) Listed I_1, I_2, I_3, and I_4 values are based on a 1200 A Rating plug value.

Table 93 - Electronic LSI (Long, Short, Instantaneous) - 100% Rated(1)

Rated Current I_n [A]	Protection Type(2)					Interrupting Code N0	
	L		S		I	Cat. No.	
	I_1=0.4...1 x I_n	t_1=[t_s] @ 6 x I_1	I_2=0.6... 10 x I_n	t_2=[t_s] @ 10 x I_n	I_3=1.5... 12 x I_n	3 Poles	4 Poles
1200	480...1200	3, 6, 12, 18	OFF, 720...12000	0.1, 0.25, 0.5, 0.8	OFF, 1800... 14400	140G-N0H3-E12-Z1	140G-N0H4-E12-Z1

(1) For more information about 80% and 100% ratings, see page 17
(2) Listed I_1, I_2, I_3, and I_4 values are based on a 1200 A Rating plug value.

Table 94 - Electronic LSIG (Long, Short, Instantaneous, Ground Fault) - 100% Rated(1)

Rated Current I_n [A]	Protection Type(2)							Interrupting Code N5		Interrupting Code N6	
	L		S		I	G		Cat. No.		Cat. No.	
	I_1=0.4... 1 x I_n	t_1=[t_s] @ 3 x I_1	I_2=1... 10 x I_n	t_2=[t_s] @ 10 x I_n	I_3=1.5... 15 x I_n	I_4=0.2... 1 x I_n	t_4=s	3 Poles	4 Poles	3 Poles	4 Poles
1200	480...1200	3, 6, 12, 18	OFF, 720... 12000	0.1, 0.25, 0.5, 0.8	OFF, 1800... 18000	OFF, 240...1200	0.1, 0.2, 0.4, 0.8	140G-N5I3-E12-Z1	140G-N5I4-E12-Z1	140G-N6I3-E12-Z1	140G-N6I4-E12-Z1

(1) For more information about 80% and 100% ratings, see page 17
(2) Listed I_1, I_2, I_3, and I_4 values are based on a 1200 A Rating plug value.

Table 95 - Electronic LSIG (Long, Short, Instantaneous, Ground Fault) - 100% Rated(1)

Rated Current I_n [A]	Protection Type(2)							Interrupting Code N0	
	L		S		I	G		Cat. No.	
	I_1=0.4... 1 x I_n	t_1=[t_s] @ 3 x I_1	I_2=1... 10 x I_n	t_2=[t_s] @ 10 x I_n	I_3=1.5... 15 x I_n	I_4=0.2... 1 x I_n	t_4=s	3 Poles	4 Poles
1200	480...1200	3, 6, 12, 18	OFF, 720...12000	0.1, 0.25, 0.5, 0.8	OFF, 1800...18000	OFF, 240...1200	0.1, 0.2, 0.4, 0.8	140G-N0I3-E12-Z1	140G-N0I4-E12-Z1

(1) For more information about 80% and 100% ratings, see page 17
(2) Listed I_1, I_2, I_3, and I_4 values are based on a 1200 A Rating plug value.

Table 96 - Electronic LSIG-MM (Long, Short, Instantaneous, Ground Fault - Maintenance Mode) - 100% Rated(1)(2)

Rated Current I_n [A]	Protection Type(3)							Interrupting Code N5		Interrupting Code N6	
	L		S		I	G		Cat. No.		Cat. No.	
	I_1=0.4 ... 1 x I_n	t_1=[t_s] @ 3 x I_1	I_2=1... 10 x I_n	t_2=[t_s] @ 10 x I_n	I_3=1.5... 15 x I_n	I_4=0.2... 1 x I_n	t_4=s	3 Poles	4 Poles	3 Poles	4 Poles
1200	480... 1200	3, 12, 24, 36, 48, 72,108,144	OFF, 720...12000	0.1, 0.25, 0.5, 0.8	OFF, 1800...18000	OFF, 240... 1200	0.1, 0.2, 0.4, 0.8	140G-N5K3-E12-Z1	140G-N5K4-E12-Z1	140G-N6K3-E12-Z1	140G-N6K4-E12-Z1

(1) For more information about 80% and 100% ratings, see page 17
(2) See page 28 for a list of the preset values for Maintenance Mode.
(3) Listed I_1, I_2, I_3, and I_4 values are based on a 1200 A Rating plug value.

Table 97 - Electronic LSIG-MM (Long, Short, Instantaneous, Ground Fault - Maintenance Mode) - 100% Rated(1)(2)

Rated Current I_n [A]	Protection Type(3)							Interrupting Code N0	
	L		S		I	G		Cat. No.	
	I_1=0.4... 1 x I_n	t_1=[t_s] @ 3 x I_1	I_2=1... 10 x I_n	t_2=[t_s] @ 10 x I_n	I_3=1.5...15 x I_n	I_4=0.2... 1 x I_n	t_4=s	3 Poles	4 Poles
1200	480...1200	3, 12, 24, 36, 48, 72, 108,144	OFF, 720...12000	0.1, 0.25, 0.5, 0.8	OFF, 1800...18000	OFF, 240...1200	0.1, 0.2, 0.4, 0.8	140G-N0K3-E12-Z1	140G-N0K4-E12-Z1

(1) For more information about 80% and 100% ratings, see page 17
(2) See page 28 for a list of the preset values for Maintenance Mode.
(3) Listed I_1, I_2, I_3, and I_4 values are based on a 1200 A Rating plug value.

Table 98 - Trip Units, Electronic LSI (Long, Short, Instantaneous), LSIG (Long, Short, Instantaneous, Ground Fault), LSIG-MM (Long, Short, Instantaneous, Ground Fault - Maintenance Mode)

	Rated Current I_n [A]	Protection Type	Cat. No. (1)
	1200	H (LSI)	140G-NTH-E12
	1200	I (LSIG)	140G-NTI-E12
	1200	K (LSIG-MM)	140G-NTK-E12

(1) Supplied installed with each MCCB. The Cat. Nos. listed are replacement parts.

1200 A, NS-Frame Molded Case Circuit Breakers

Catalog Number Explanation

Examples that are given in this section are not intended to be used for product selection. Not all combinations generate a valid catalog number. Use ProposalWorks™ software to configure the MCCB. ProposalWorks software is available from rok.auto/systemtools.

NS-Frame MCCBs are available as assembled circuit breakers. Individual trip unit components can be ordered for field assembly or as replacement parts.

Terminal lugs are not supplied and can be ordered separately. See page 93 for available lugs.

140G	-	NS	5	H	3	-	E12	-		-	MJ	-	RK	-	SD	-	SD
a		b	c	d	e		f		g		h		i		j		k

a	
Bulletin Number	
Code	**Description**
140G	Global Molded Case Circuit Breaker

b	
Frame/Rating	
Code	**Description**
NS	1200 A

c	
Interrupting Rating/Breaking Capacity (based on I_c at 480V)	
Code	**Description**
5	50 kA
6	65 kA
0	100 kA
T	Trip unit

d	
Protection Type	
Code	**Description**
H	Electronic LSI-long, short, instant
I	Electronic LSIG -long, short, instant, and ground fault
K	Electronic LSIG-D-MM -long, short, instant, ground fault, and MM
S	Molded case switch (isolator)

e	
Poles	
Code	**Description**
3	3 poles
4	4 poles

f	
Rated Current	
Code	**Description**
E12	1200 A trip unit with 1200 A rating plug

g	
Continuous Rated(1)	
Code	**Description**
Blank	80% Rated

h, i
Remote MCCB Operation—see page 78

j, k
Factory-installed Options—see page 78

(1) For more information about 80% and 100% ratings, see page 17.

Assembled Molded Case Circuit Breakers — 1200 A, NS-Frame

Table 99 - Interrupting Rating/Breaking Capacity — Electronic Circuit Breakers

Interrupting Rating (50/60 Hz), UL 489/CSA C22.2, No. 5[kA]			Breaking Capacity (50/60 Hz), IEC 60947-2 I_{cu} [kA]/I_{cs} %										Interrupting Code(1)
240V	480V	600V	220V		415V		440V		500V		690V		
			I_{cu} [kA]	I_{cs}[%I_{cu}]	I_{cu} [kA]	I_{cs}[%I_{cu}]	I_{cu} [kA]	I_{cs}[%I_{cu}]	I_{cu} [kA]	I_{cs}[%I_{cu}]	I_{cu} [kA]	I_{cs}[%I_{cu}]	
65	50	25	85	100	50	100	50	100	40	100	30	100	NS5
100	65	50	100	100	70	100	65	100	50	100	42	75	NS6
150	100	65	200	100	120	100	100	100	85	75	50	75	NS0

(1) See Table 100 through Table 105 for Cat. No. selection

Table 100 - Electronic LSI (Long, Short, Instantaneous)

Rated Current I_n [A]	Protection Type(1)					Interrupting Code NS5		Interrupting Code NS6	
	L		S		I	Cat. No.		Cat. No.	
	I_1=0.4...1 x I_n	t_1=[t_s] @ 6 x I_1	I_2=0.6...10 x I_n	t_2=s	I_3=1.5...12 x I_n	3 Poles	4 Poles	3 Poles	4 Poles
1200(2)	480...1200	3, 6, 12, 18	OFF, 720...12000	0.1, 0.25, 0.5, 0.8	OFF, 1800...14400	140G-NS5H3-E12	140G-NS5H4-E12	140G-NS6H3-E12	140G-NS6H4-E12

(1) Listed I_1, I_2, and I_3 values are based on a 1200 A Rating plug value.
(2) Rated current = 1200 A for UL Ratings.

Table 101 - Electronic LSI (Long, Short, Instantaneous)

Rated Current I_n [A]	Protection Type(1)					Interrupting Code NS0	
	L		S		I	Cat. No.	
	I_1=0.4...1 x I_n	t_1=[t_s] @ 6 x I_1	I_2=0.6...10 x I_n	t_2=[t_s] @ 10 x I_1	I_3=1.5...12 x I_n	3 Poles	4 Poles
1200(2)	480...1200	3, 6, 12, 18	OFF, 720...12000	0.1, 0.25, 0.5, 0.8	OFF, 1800...14400	140G-NS0H3-E12	140G-NS0H4-E12

(1) Listed I_1, I_2, and I_3 values are based on a 1200 A Rating plug value.
(2) Rated current = 1200 A for UL Ratings; 1250 A for IEC.

Table 102 - Electronic LSIG (Long, Short, Instantaneous, Ground Fault)

Rated Current I_n [A]	Protection Type(1)							Interrupting Code NS5		Interrupting Code NS6	
	L		S		I	G		Cat. No.		Cat. No.	
	I_1=0.4... 1 x I_n	t_1=[t_s] @ 3 x I_1	I_2=0.6... 10 x I_n	t_2=[t_s] @ 10 x I_1	I_3=1.5... 15 x I_n	I_4=0.2... 1 x I_n	t_4=s	3 Poles	4 Poles	3 Poles	4 Poles
1200(2)	480...1200	3, 6, 12, 18	OFF, 720...12000	0.1, 0.25, 0.5, 0.8	OFF, 1800...18000	OFF, 240...1200	0.1, 0.2, 0.4, 0.8	140G-NS5I3-E12	140G-NS5I4-E12	140G-NS5I4-E12	140G-NS6I4-E12

(1) Listed I_1, I_2, and I_3 values are based on a 1200 A Rating plug value.
(2) Rated current = 1200 A for UL Ratings.

Table 103 - Electronic LSIG (Long, Short, Instantaneous, Ground Fault)

Rated Current I_n [A]	Protection Type(1)							Interrupting Code NS0	
	L		S		I	G		Cat. No.	
	I_1=0.4...1 x I_n	t_1=[t_s] @ 3 x I_1	I_2=0.6...10 x I_n	t_2=[t_s] @ 10 x I_1	I_3=1.5...15 x I_n	I_4=0.2... 1 x I_n	t_4=s	3 Poles	4 Poles
1200(2)	480...1200	3, 6, 12, 18	OFF, 720...12000	0.1, 0.25, 0.5, 0.8	OFF, 1800...18000	OFF, 240...1200	0.1, 0.2, 0.4, 0.8	140G-NS0I3-E12	140G-NS0I4-E12

(1) Listed I_1, I_2, I_3, and I_4 values are based on a 1200 A Rating plug value.
(2) Rated current = 1200 A for UL Ratings; 1250 A for IEC.

Table 104 - Electronic LSIG-MM (Long, Short, Instantaneous, Ground Fault - Maintenance Mode)(1)

Rated Current I_n [A]	Protection Type(2)							Interrupting Code NS5		Interrupting Code NS6	
	L		S		I	G		Cat. No.		Cat. No.	
	I_1=0.4... 1 x I_n	t_1=[t_s] @ 3 x I_1	I_2=0.6...10 x I_n	t_2=[t_s] @ 10 x I_1	I_3=1.5...15 x I_n	I_4=0.2... 1 x I_n	t_4=s	3 Poles	4 Poles	3 Poles	4 Poles
1200(3)	480... 1200	3, 12, 24, 36, 48, 72, 108, 144	OFF, 720... 12000	0.1, 0.25, 0.5, 0.8	OFF, 1800... 18000	OFF, 240... 1200	0.1, 0.2, 0.4, 0.8	140G-NS5K3-E12	140G-NS5K4-E12	140G-NS6K3-E12	140G-NS6K4-E12

(1) See page 28 for a list of the preset values for Maintenance Mode.
(2) Listed I_1, I_2, I_3, and I_4 values are based on a 1200 A Rating plug value.
(3) Rated current = 1200 A for UL Ratings.

Table 105 - Electronic LSIG-MM (Long, Short, Instantaneous, Ground Fault - Maintenance Mode)(1)

Rated Current I_n [A]	Protection Type(2)								Interrupting Code NS0	
	L		S		I	G		MM	Cat. No.	
	I_1=0.4... 1 x I_n	t_1=[t_s] @ 3 x I_1	I_2=0.6...10 x I_n	t_2=[t_s] @ 10 x I_1	I_3=1.5...15 x I_n	I_4=0.2... 1 x I_n	t_4=s	I_5=1.5...4 x I_n	3 Poles	4 Poles
1200(3)	480...1200	3, 12, 24, 36, 48, 72, 108, 144	OFF, 720...12000	0.1, 0.25, 0.5, 0.8	OFF, 1800...18000	OFF, 240...1200	0.1, 0.2, 0.4, 0.8	1.5...4, 0.1 step	140G-NS0K3-E12	140G-NS0K4-E12

(1) See page 28 for a list of the preset values for Maintenance Mode.
(2) Listed I_1, I_2, I_3, and I_4 values are based on a 1200 A Rating plug value.
(3) Rated current = 1200 A for UL Ratings; 1250 A for IEC.

Table 106 - Trip Units, Electronic LSI (Long, Short, Instantaneous), LSIG (Long, Short, Instantaneous, Ground Fault), LSIG-MM (Long, Short, Instantaneous, Ground Fault-Maintenance Mode)(1)

	Rated Current I_n [A]	Protection Type	Cat. No.
	1200	H (LSI)	140G-NTH-E12
	1200	I (LSIG)	140G-NTI-E12
	1200	K (LSIG-MM)	140G-NTK-E12

(1) Supplied installed with each MCCB. The Cat. Nos. listed are replacement parts.

2000...3000 A, R-Frame Molded Case Circuit Breakers

Catalog Number Explanation

Examples that are given in this section are not intended to be used for product selection. Not all combinations generate a valid catalog number. Use ProposalWorks™ software to configure the MCCB. ProposalWorks software is available from rok.auto/systemtools.

R-Frame MCCBs are available as assembled circuit breakers. Individual trip unit components can be ordered for field assembly or as replacement parts.

Terminal lugs are not supplied and can be ordered separately. See page 93 for available lugs.

140G	-	R	12	K	3	-	E25	-	Z1	-	W1	-	MD	-	RD	-	SB
a		b	c	d	e		f		g		h		i		j		k

a	
Bulletin Number	
Code	**Description**
140G	Global Molded Case Circuit Breaker

b	
Frame/Rating	
Code	**Description**
R	2500...3000 A

c	
Interrupting Rating/Breaking Capacity (based on I_c at 480V)	
Code	**Description**
12	125 kA
T	Trip Unit

d	
Protection Type	
Code	**Description**
K	Electronic LSIG-MM; Long, short, instant, ground fault, and maintenance mode
S	Molded case switch (isolator)

e	
Poles	
Code	**Description**
3	3 poles
4	4 poles

f	
Rated Current	
Code	**Description**
E20	2000 A trip unit with 2000 A rating plug
E25	2500 A trip unit with 2500 A rating plug
E30	3000 A trip unit with 3000 A rating plug

g	
Continuous Rated(1)	
Code	**Description**
Blank	80% Rated
Z1	100% Rated

h	
Door Interlock	
Code	**Description**
Blank	with door interlock
W1	without door interlock

(1) For more information about 80% and 100% ratings, see page 17.

i, j
Remote MCCB Operation—see page 78

k
Factory-installed Options—see page 78

Assembled Molded Case Circuit Breakers — 2000...3000 A, R-Frame

Table 107 - Interrupting Rating/Breaking Capacity — Electronic Circuit Breakers

Interrupting Rating (50/60 Hz), UL 489/CSA C22.2, No. 5 [kA]			Breaking Capacity (50/60 Hz), IEC 60947-2 I_{cu} [kA]/I_{cs} %										Interrupting Code(1)
240V	480V	600V	220V		415V		440V		500V		690V		
			I_{cu} [kA]	I_{cs}[%I_{cu}]	I_{cu} [kA]	I_{cs}[%I_{cu}]	I_{cu} [kA]	I_{cs}[%I_{cu}]	I_{cu} [kA]	I_{cs}[%I_{cu}]	I_{cu} [kA]	I_{cs}[%I_{cu}]	
125	125	100	130	75	80	75	80	75	40	100	40	100	R12

(1) See Table 108 and Table 109 for Cat. No. selection.

Table 108 - Electronic LSIG-MM (Long, Short, Instantaneous, Ground Fault, Maintenance Mode) - 80% Rated(1)(2)

Rated Current I_n [A]	Protection Type(3)							Interrupting Code R12	
	L		S		I	G		Cat. No.	
	I_1=0.4...1 x I_n	t_1=s	I_2=0.6...10 x I_n	t_2=s	I_3=1.5...15 x I_n	I_4=0.2... 1 x I_n	t_4=s	3 Poles	4 Poles
2000	800...2000	3, 6, 12, 18	OFF, 1200...20000	0.1, 0.25, 0.5, 0.8	OFF, 3000...30000	OFF, 400...2000	0.1, 0.2, 0.4, 0.8	140G-R12K3-E20	140G-R12K4-E20
2500(3)	1000...2500	3, 6, 12, 18	OFF, 1500...25000	0.1, 0.25, 0.5, 0.8	OFF, 3750...37500	OFF, 500...2500	0.1, 0.2, 0.4, 0.8	140G-R12K3-E25	140G-R12K4-E25
3000	1200...3000	3, 6, 12, 18	OFF, 1800...30000	0.1, 0.25, 0.5, 0.8	OFF, 4500...36000 (4)	OFF, 600...3000	0.1, 0.2, 0.4, 0.8	140G-R12K3-E30	140G-R12K4-E30

(1) For more information about 80% and 100% ratings, see page 17.
(2) See page 28 for a list of the preset values for Maintenance Mode.
(3) Listed I_1, I_2, I_3, and I_4 values are based on the default rating plug value.
(4) For 3000 A trip units, I_3 maximum is 12 x I_n.

Table 109 - Electronic LSIG-MM (Long, Short, Instantaneous, Ground Fault, Maintenance Mode) - 100% Rated(1)(2)

Rated Current I_n [A]	Protection Type(3)								Interrupting Code R12	
	L		S		I	G		MM	Cat. No.	
	I_1=0.4... 1 x I_n	t_1=s	I_2=0.6...10 x I_n	t_2=s	I_3=1.5...15 x I_n	I_4=0.2... 1 x I_n	t_4=s	I_5=1.5...4 x I_n	3 Poles	4 Poles
2000	800...2000	3, 6, 12, 18	OFF... 20000	0.1, 0.25, 0.5, 0.8	OFF, 3000...30000	OFF, 400...2000	0.1, 0.2, 0.4, 0.8	1.5...4, 0.1 step	140G-R12K3-E20-Z1	140G-R12K4-E20-Z1
2500	1000...2500	3, 6, 12, 18	OFF, 1500...25000	0.1, 0.25, 0.5, 0.8	OFF, 3750...37500	OFF, 500...2500	0.1, 0.2, 0.4, 0.8	1.5...4, 0.1 step	140G-R12K3-E25-Z1	140G-R12K4-E25-Z1
3000	1200...3000	3, 6, 12, 18	OFF, 1800...30000	0.1, 0.25, 0.5, 0.8	OFF, 4500...36000 (4)	OFF, 600...3000	0.1, 0.2, 0.4, 0.8	1.5...4, 0.1 step	140G-R12K3-E30-Z1	140G-R12K4-E30-Z1

(1) For more information about 80% and 100% ratings, see page 17.
(2) See page 28 for a list of the preset values for Maintenance Mode.
(3) Listed I_1, I_2, I_3, and I_4 values are based on the default rating plug value.
(4) For 3000 A trip units, I_3 maximum is 12 x I_n.

Table 110 - Trip Units, Electronic LSI (Long, Short, Instantaneous), LSIG (Long, Short, Instantaneous, Ground Fault), LSIG-MM (Long, Short, Instantaneous, Ground Fault -Maintenance Mode)(1)

	Rated Current I_n [A]	Protection Type	Cat. No.
	2000, 2500, 3000	K (LSIG-MM)	140G-RTK-E20

(1) Supplied installed with each MCCB. The Cat. Nos. listed are replacement parts.

Motor Circuit Protectors

- Current range 0.16...1200 A
- End cap/bolt-on terminals are standard
- Visible trip indication
- High current limiting
- High switching capacity
- UL Listed/Recognized for motor loads
  - Short-circuit protection - magnetic trip
  - Overload protection must be provided separately

The Bulletin 140MG Motor Circuit Protectors (MCPs) provide short-circuit protection for individual motor loads. Factory-installed internal accessories make installation and wiring easy.

Motor Circuit Protectors may provide the following protective and control functions.

- Disconnect for motor branch circuit
- Branch circuit, short-circuit protection (magnetic protection)
- Switching (manual)

In North America, electrical codes require that an individual motor branch circuit be protected by a UL/CSA Listed fuse, circuit breaker or self-protected combination motor controller.

140MG-G, H, I, J, K, M, and N Frames

The 140MG-G, H, I, J, K, M and N-Frame motor circuit protectors are UL/CSA Recognized as circuit breakers. They are UL/CSA Recognized, rather than UL/CSA Listed, because they only provide short-circuit protection and not thermal overload protection for the motor.

Standards Compliance	Certifications
IEC 60947-2	CE Marked
UL489	CSA Certified (File No. LR1234)
CSA22.2, No. 5	UR Recognized (File No. E224135)
	CCC

Catalog Number Explanation

Examples that are given in this section are not intended to be used for product selection. Not all combinations generate a valid catalog number. Use ProposalWorks™ software to configure the MCP. ProposalWorks software is available from rok.auto/systemtools.

All MCPs are only available as assembled circuit breakers. Individual frame and trip unit components are not available.

Terminal lugs are not supplied and can be ordered separately. See page 93 for available lugs.

125 A, G-Frame and 150 A, I-Frame

140MG	-	I	8	P	-	C70	-	SD	-	KA
a		b	c	d		e		f		f

a	
Bulletin Number	
Code	Description
140MG	Global Motor Circuit Protector

b	
Frame/Rating	
Code	Description
G	125 A
I	150 A

c	
Interrupting Rating/Breaking Capacity (based on I_c at 480V)	
Code	Description
8	High break(1)

(1) The interrupting rating for MCPs is dependent upon the controller used. Please see the Global Short-circuit Rating Tool, rok.auto/sccr.

d	
Protection Type	
Code	Description
P	Adjustable magnetic only (less than 13 x I_n)

e	
Rated Current	
Code	Description
B	example: B30 = 3 A
C	example: C30 = 30 A
D	example: D12 = 120 A

f
Factory-installed Options—see page 78

125 A, H-Frame and 250 A, J-Frame

140MG	-	J	8	P	-	D15	-	SD	-	AA
a		b	c	d		e		f		f

a	
Bulletin Number	
Code	Description
140MG	Global Motor Circuit Protector

b	
Frame/Rating	
Code	Description
H	125 A
J	250 A

c	
Interrupting Rating/Breaking Capacity (based on I_c at 480V)	
Code	Description
8	High break(1)

d	
Protection Type	
Code	Description
P	Adjustable magnetic only (less than 13 x I_n)

(1) The interrupting rating for MCPs is dependent upon the controller used. Please see the Global Short-circuit Rating Tool, rok.auto/sccr.

e	
Rated Current	
Code	Description
B	example: B30 = 3 A
C	example: C30 = 30 A
D	example: D20 = 200 A

f
Factory-installed Options—see page 78

400 A, K-Frame and 800 A, M-Frame

140MG	-	M	8	P	-	D40	-	SD	-	AA
a		b	c	d		e		f		f

a	
Bulletin Number	
Code	**Description**
140MG	Global Motor Circuit Protector

b	
Frame/Rating	
Code	**Description**
K	400 A
M	800 A

c	
Interrupting Rating/Breaking Capacity (based on I_c at 480V)	
Code	**Description**
8	High break(1)

d	
Protection Type	
Code	**Description**
P	Adjustable magnetic only (less than 13 x I_n)

(1) The interrupting rating for MCPs is dependent upon the controller used. Please see the Global Short-circuit Rating Tool, rok.auto/sccr.

e	
Rated Current(1)	
Code	**Description**
D30	example: 300 A
D40	example: 400 A
D60	example: 600 A
D80	example: 800 A
Blank	Frame only

f
Factory-installed Options—see page 78

(1) MCPs that have electronic trip units come with a rating plug installed that matches the trip unit rating. Different value rating plugs are not compatible with these devices

1200 A, N-Frame

140MG	-	N	8	P	-	E12	-	SD	-	AB
a		b	c	d		e		f		f

a	
Bulletin Number	
Code	**Description**
140MG	Global Motor Circuit Protector

b	
Frame/Rating	
Code	**Description**
N	1200 A

c	
Interrupting Rating/Breaking Capacity (based on I_c at 480V)	
Code	**Description**
8	High break(1)

d	
Protection Type	
Code	**Description**
P	Adjustable magnetic only (less than 13 x I_n)

(1) The interrupting rating for MCPs is dependent upon the controller used. Please see the Global Short-circuit Rating Tool, rok.auto/sccr.

e	
Rated Current(1)	
Code	**Description**
E12	1200 A

f
Factory-installed Options—see page 78

(1) MCPs that have electronic trip units come with a rating plug installed that matches the trip unit rating. Different value rating plugs are not compatible with these devices

Motor Ratings

Use Table 111 and Table 112 to find the motor FLA for your application. Then, use that value in Table 113 and Table 114 to select the MCP. The values are extracted from the standards for the given relationship between rated operational current and the operational kilowatt/horsepower rating. Actual selection should be based on the motor nameplate rating and performance for the specific motor

Table 111 - Kilowatt to Full-load Amperes for AC Induction Motors

Rated Operational Power [kW][(1)]	Guide Values of Rated Operational Currents [A]			
	230V	400V	500V	690V
0.06	0.35	0.20	0.16	0.12
0.09	0.52	0.30	0.24	0.17
0.12	0.70	0.44	0.32	0.23
0.18	1.0	0.60	0.48	0.35
0.25	1.5	0.85	0.68	0.49
0.37	1.9	1.10	0.88	0.64
0.55	2.6	1.5	1.2	0.87
0.75	3.3	1.9	1.5	1.1
1.1	4.7	2.7	2.2	1.6
1.5	6.3	3.6	2.9	2.1
2.2	8.5	4.9	3.9	2.8
3.0	11.3	6.5	5.2	3.8
4	15	8.5	6.8	4.9
5.5	20	11.5	9.2	6.7
7.5	27	15.5	12.4	8.9
11	38	22.0	17.6	12.8
15	51	29	23	17
18.5	61	35	28	21
22	72	41	33	24
30	96	55	44	32
37	115	66	53	39
45	140	80	64	47
55	169	97	78	57
75	230	132	106	77
90	278	160	128	93
110	340	195	156	113
132	400	230	184	134
150	–	–	–	–

Rated Operational Power [kW][(1)]	Guide Values of Rated Operational Currents [A]			
	230V	400V	500V	690V
160	487	280	224	162
185	–	–	–	–
200	609	350	280	203
220	–	–	–	–
250	748	430	344	250
280	–	–	–	–
300	–	–	–	–
315	940	540	432	313
335	–	–	–	–
355	1061	610	488	354
375	–	–	–	–
400	1200	690	552	400
425	–	–	–	–
450	–	–	–	–
475	–	–	–	–
500	1478	850	680	493
530	–	–	–	–
560	1652	950	760	551
600	–	–	–	–
630	1844	1060	848	615
670	–	–	–	–
710	2070	1190	952	690
750	–	–	–	–
800	2340	1346	1076	780
850	–	–	–	–
900	2640	1518	1214	880
950	–	–	–	–
1000	2910	1673	1339	970

(1) Preferred rated values according to IEC 60072-1 (primary series).

Table 112 - Horsepower to Full-load Amperes for AC Induction Motors

Rated Operational Power [Hp][1]	Guide Values of Rated Operational Currents [A]						
	110... 120V	200V	208V	220... 240V	380... 415V	440... 480V	550... 600V
1/2	4.4	2.5	2.4	2.2	1.3	1.1	0.9
3/4	6.4	3.7	3.5	3.2	1.8	1.6	1.3
1	8.4	4.8	4.6	4.2	2.3	2.1	1.7
1-1/2	12.0	6.9	6.6	6.0	3.3	3.0	2.4
2	13.6	7.8	7.5	6.8	4.3	3.4	2.7
3	19.2	11.0	10.6	9.6	6.1	4.8	3.9
5	30.4	17.5	16.7	15.2	9.7	7.6	6.1
7-1/2	44.0	25.3	24.2	22.0	14.0	11.0	9.0
10	56.0	32.2	30.8	28.0	18.0	14.0	11.0
15	84	48.3	46.2	42.0	27.0	21.0	17.0
20	108	62.1	59.4	54.0	34.0	27.0	22.0
25	136	78.2	74.8	68	44	34	27
30	160	92	88	80	51	40	32
40	208	120	114	104	66	52	41
50	260	150	143	130	83	65	52
60	–	177	169	154	103	77	62
75	–	221	211	192	128	96	77
100	–	285	273	248	165	124	99
125	–	359	343	312	208	156	125
150	–	414	396	360	240	180	144
200	–	552	528	480	320	240	192
250	–	–	–	604	403	302	242
300	–	–	–	722	482	361	289
350	–	–	–	828	560	414	336
400	–	–	–	954	636	477	382
450	–	–	–	1030	–	515	412
500	–	–	–	1180	786	590	472

(1) Horsepower and currents values according to UL 508 (60 Hz).

Table 113 - Motor Circuit Protectors—G-, H-, I-, and J-Frame Devices (Adjustable Thermal-Magnetic)

Rated Operational Current I_e [A]	Magnetic Trip Current [A]									Cat. No.(1)
	Cam Setting									
	A	B	C	D	E	F	G	H	I	
G-Frame										
3	12	15	17	20	23	25	28	30	33	140MG-G8P-B30
7	28	34	40	46	53	59	65	71	77	140MG-G8P-B70
15	45	60	75	90	105	120	135	150	165	140MG-G8P-C15
30	90	120	150	180	210	240	270	300	330	140MG-G8P-C30
50	150	200	250	300	350	400	450	500	550	140MG-G8P-C50
70	210	280	350	420	490	560	630	700	770	140MG-G8P-C70
80	240	320	400	480	560	640	720	800	880	140MG-G8P-C80
100	300	400	500	600	700	800	900	1000	1100	140MG-G8P-D10
125	375	500	625	750	875	1000	1125	1250	1375	140MG-G8P-D12
H-Frame										
3	12	15	17	20	23	25	28	30	33	140MG-H8P-B30
7	28	34	40	46	53	59	65	71	77	140MG-H8P-B70
15	45	60	75	90	105	120	135	150	165	140MG-H8P-C15
30	90	120	150	180	210	240	270	300	330	140MG-H8P-C30
50	150	200	250	300	350	400	450	500	550	140MG-H8P-C50
70	210	280	350	420	490	560	630	700	770	140MG-H8P-C70
80	240	320	400	480	560	640	720	800	880	140MG-H8P-C80
100	300	400	500	600	700	800	900	1000	1100	140MG-H8P-D10
125	625	703	781	859	938	1016	1094	1172	1250	140MG-H8P-D12
I-Frame										
100	600	675	750	825	900	975	1050	1125	1200	140MG-I8P-D10
110	660	743	825	908	990	1073	1150	1238	1320	140MG-I8P-D11
125	750	844	938	1031	1125	1219	1313	1406	1500	140MG-I8P-D12
150	900	1013	1125	1238	1350	1463	1575	1688	1800	140MG-I8P-D15
J-Frame										
150	750	844	938	1031	1125	1219	1313	1406	1500	140MG-J8P-D15
175	875	984	1094	1203	1313	1422	1531	1641	1750	140MG-J8P-D17
200	1000	1125	1250	1375	1500	1625	1750	1875	2000	140MG-J8P-D20
225	1125	1266	1406	1547	1688	1828	1969	2109	2250	140MG-J8P-D22
250	1250	1406	1563	1719	1875	2031	2188	2344	2500	140MG-J8P-D25

Table 114 - Motor Circuit Protectors—K-, M-, and N-Frame Devices (Electronic DIP Switch)

Rated Operational Current I_e [A]	Magnetic Trip Current [A]	Cat. No.(1)
	I_3 (adjustable) [A]	
K-Frame		
300	300...3000	140MG-K8P-D30
400	400...4000	140MG-K8P-D40
M-Frame		
600	600...6000	140MG-M8P-D60
800	800...8000	140MG-M8P-D80
N-Frame		
1200	1200...12000 (2)	140MG-N8P-E12

(1) The interrupting rating for MCPs is dependent upon the controller used. See the global short-circuit ratings tables at rok.auto/sccr, or contact your local Rockwell Automation sales office or Allen-Bradley distributor.
(2) I_3 is adjustable between 1...10x motor FLA.

Motor Protection Circuit Breakers

Cat. No. 140MG-H...

Cat. No. 140MG-J...

Motor Protection Circuit Breakers (MPCBs) have the following features:

- 10...150 A current range
- UL Listed for motor loads
- Adjustment features
  - Rated motor current adjustable from 0.4...1 x I_n
  - Overload production [L] Class 3E, 5E, 10E, and 20E
  - Unbalance L1, L2, L3 detection [U] adjustable either ON or OFF, alarm at 10% unbalance, trip at 50% unbalance, T=2 seconds
  - Short-circuit protection [I], electronic magnetic trip adjustable from 6...13 x I_n
- LED visible warnings and trip indication
- Manual settings using DIP switches
- End cap/bolt-on terminals are standard

Standards Compliance	Certifications
IEC 60947-2	CE Marked
UL489	CCC
CSA22.2, No. 5	CSA Certified (File No. LR1234)
UL 60947-4-1A	UL Listed
	HACR Type E197878

Catalog Number Explanation

Examples that are given in this section are not intended to be used for product selection. Not all combinations generate a valid catalog number. Use ProposalWorks™ software to configure the MPCB. ProposalWorks software is available from rok.auto/systemtools.

Terminal lugs are not supplied and can be ordered separately. See page 93 for available lugs.

140MG	-	J	8	E	-	D15	-	SD	-	AA
a		b	c	d		e		f		f

a	
Bulletin Number	
Code	Description
140MG	Motor Protection Circuit Breaker

b	
Frame/Rating	
Code	Description
H	100 A
J	150 A

c	
Interrupting Rating/Breaking Capacity (based on I_c at 480V)	
Code	Description
8	High break

d	
Protection Type	
Code	Description
E	LUI

e	
Rated Current	
Code	Description
C	example: C25 = 25 A
D	example: D15 = 150 A

f
Factory-installed Internal Options—see page 78

Table 115 - Interrupting Rating/Breaking Capacity

Interrupting Rating (50/60 Hz), UL 489/CSA C22.2, No. 5 [kA]			Breaking Capacity (50/60 Hz), IEC 60947-2							
240V	480V	600V	220V(1)		415V		440V(1)		690V	
			I_{cu} [kA]	I_{cs} [%I_{cu}]	I_{cu} [kA]	I_{cs} [%I_{cu}]	I_{cu} [kA]	I_{cs} [%I_{cu}]	I_{cu} [kA]	I_{cs} [%I_{cu}]
150	65	25	100	100	70	100	65	100	15	100

(1) These ratings have not been tested for the CCC listing.

Table 116 - Motor Protection Circuit Breaker—H- and J-Frame Devices

Max. Rated Motor Current I_n [A]	L (Motor FLC)		U	I	Cat. No.(1)
	I_1 = 0.4...1 x I_n	Trip Class	50% of I_1	I_n = Instantaneous	
H-Frame					
25	10...25	3E, 5E, 10E, 20E (approx. 2...20 s)	ON or OFF	Adjustable from 6...13 x I_n	140MG-H8E-C25
60	24...60				140MG-H8E-C60
100	40...100				140MG-H8E-D10
J-Frame					
40	16...40	3E, 5E, 10E, 20E (approx. 2...20 s)	ON or OFF	Adjustable from 6...13 x I_n	140MG-J8E-C40
60	24...60				140MG-J8E-C60
100	40...100				140MG-J8E-D10
150	60...150				140MG-J8E-D15

(1) Select the Motor Protection Circuit Breaker based on the motor FLC.

- 125...2500 A current range
- 3- and 4-pole devices
- End cap/bolt-on terminals are standard
- These switches are like an MCCB, but they are not supplied with thermal overload protection
- Self protecting, supplied with instantaneous magnetic trip override
- Suitable for use as Motor Branch Circuit and Motor Disconnect
- Must be protected on the supply side of the switch against short circuits that use a fuse or breaker at or below the listed maximum rated current of the protective device.

Standards Compliance	Certifications
IEC 60947-1, -2	CE Marked
UL489	UL Listed
CSA22.2, No. 5	CSA Certified (File No. LR 1234)
HACR (G,H,I and J Frame)	HACR Type E118548

Catalog Number Explanation

Examples that are given in this section are not intended to be used for product selection. Not all combinations generate a valid catalog number. Use ProposalWorks™ software to configure the MPCB. ProposalWorks software is available from rok.auto/systemtools.

Terminal lugs are not supplied and can be ordered separately. See page 93 for available lugs.

140G	-	H	6	S	3	-	D12	-	SD	-	AA
a		b	c	d	e		f		g		g

a	
Bulletin Number	
Code	Description
140G	Global Molded Case Circuit Breaker

b	
Frame/Rating	
Code	Description
G	125 A
H	125 A
I	225 A
J	250 A
K	400 A
M	800 A
N	1200 A
R	2500...3000 A

c	
Interrupting Rating/Breaking Capacity (based on I_c at 480V)	
Code	Description
3	35 kA
6	65 kA
0	100 kA
12	125 kA
15	150 kA

d	
Protection Type	
Code	Description
S	Molded case switch (isolator)

e	
No. of Poles	
Code	Description
3	3 poles
4	4 poles

f	
Rated Current	
Code(1)	Description
D⊗	example: D30 = 300 A
E⊗	example: E12 = 1200 A

g
Factory-installed Options—see page 78

(1) Rated current equals the value of ⊗ multiplied by the first letter of the code. B = 0.1 ⊗, C = 1 ⊗, D = 10 ⊗, and E = 100 ⊗.

Table 117 - Interrupting Rating/Breaking Capacity

Required upstream fuse or breaker up to max rated current [A]	AC Interrupting Rating (50/60 Hz), UL 489/CSA C22.2, No. 5 [kA]				Breaking Capacity (DC), IEC 60947-3			Interrupting Code (1)
	240V	480V	600Y/347V	600V	250V (2 poles in series)	500V (3 poles in series)	600V (3 poles in series)	
125	100	65	25	—	—	—	—	G6
125	150	65	—	25	—	—	—	H6
225	65	35	10	—	—	—	—	I3
250	200	100	—	35	—	—	—	J0
400	200	150	—	100	—	100	65	K15
800	200	65	—	35	—	—	35	M6
2000	100	65	—	50	—	—	—	N6
2500	125	125	—	100	—	—	—	R12

(1) See Table 118 for Cat. No. selection.

Table 118 - Molded Case Switches

UL 489, CSA C22.2, No. 5				IEC 60947-3							Cat. No.	
Withstand Current I_s [A]	Magnetic Override I_{cw}(1) [A]	Rated Voltage		Rated Service Voltage U_e [V]			Rated Service Current		Rated Insulation Voltage	Rated Impulse Withstand	3 Poles	4 Poles
							AC23	DC23				
		AC (50/60 Hz) [V]	DC [V]	AC (50/60 Hz)	DC	Poles in series	I_e [A]	I_e [A]	U_i [V]	U_{imp} [kV]		
125	1500	600Y/347	500	690	500	4(2)	125	125	800	8	140G-G6S3-D12	140G-G6S4-D12
125	1500	600	500	690	500	3	125	125	1000	8	140G-H6S3-D12	140G-H6S4-D12
225	2700	600Y/347	500	690	500	3	200	200	800	8	140G-I3S3-D22	140G-I3S4-D22
250	3000	600	600	690	500	2	200	200	1000	8	140G-J0S3-D25	140G-J0S4-D25
400	5000	600	600	690	750	3	400	400	1000	8	140G-K15S3-D40	140G-K15S4-D40
800	10000	600	600	690	750	3	800	-	1000	8	140G-M6S3-D80	140G-M6S4-D80
2000	20000	600	—	690	750	3	1200	—	1000	8	140G-N6S3-E12	140G-N6S4-E12
2500	40000	600	—	690	750	3	—2500	—	1000	12	140G-R12S3-E25	140G-R12S4-E25

(1) Does not provide overcurrent protection; may open above this current value
(2) 50V DC with 3 poles in series.

Factory-assembled components are compatible with all device types (MCCBs, MCPs, MPCBs, and Molded Case Switches) and offer faster installation time and streamlined accessory selection for certain common functions. These options include:

- Assembly of breaking frame and trip unit (for products that are available separately)
- Remote operation via combined use of spring charging motor, shunt trip, shunt close, trip reset, and mechanical counter
- Shunt trip and undervoltage release for controls or protections
- Variety of contact kits including auxiliary, alarm, and trip unit alarm contacts
- Terminal connections with saddle clamp-style lugs or busbar adapter

See Accessories for complete descriptions of available options.

Table 119 - Internal Options(1)

Left-side Mounting (Max 1)		
Shunt Trip and Undervoltage Release Units		
Code	**Description**	**Frame Size**
SJ	Shunt Trip, 24...30V AC/DC	G, H, I, J, K, M, N, NS(2), R(2)
SK	Shunt Trip, 48...60V AC/DC	
SD	Shunt Trip, 110...127V AC; 110...125V DC	
SA	Shunt Trip, 220...240V AC; 220...250V DC	
SB	Shunt Trip, 380...440V AC	
SC	Shunt Trip, 480...525V AC	G, H, I, J, K, M
UJ	Undervoltage Release, 24...30V AC/DC	G, H, I, J, K, M, N, NS, R
UK	Undervoltage Release, 48V AC/DC	G, H, I, J, K, M
UY	Undervoltage Release, 60V AC/DC	N, NS, R
UD	Undervoltage Release, 110...127V AC; 110...125V DC	G, H, I, J, K, M, N, NS, R
UA	Undervoltage Release, 220...240V AC; 220...250V DC	
UB	Undervoltage Release, 380...440V AC	
UC	Undervoltage Release, 480...525V AC	
Blank	No Selection	G, H, I, J, K, M, N, NS, R

Right-side Mounting (Max 1)		
Auxiliary and Alarm Contacts		
Code	**Description**	**Frame Size**
AJ	1 Aux., 1 Alarm Contact, 24V DC	G, H, I, J, N, NS
CJ	3 Aux., 1 Alarm Contact, 24V DC	K, M,
DJ	1 Trip Unit Alarm Contact, 24V DC	H, J,
KJ	1 Aux. Contact, 24V DC	G, I, J,
FJ	2 Aux. Contact, 24V DC	N, NS
KA	1 Aux. Contact, 250V AC	G, H, I, J,
AA	1 Aux., 1 Alarm Contact, 250V AC	G, H, I, J, K, M
BA	2 Aux., 1 Alarm Contact, 250V AC	G, H, I, J,
CA	3 Aux., 1 Alarm Contact, 250V AC	K, M
DA	1 Trip Unit Alarm Contact, 250V AC	H, J, N, R
AB	1 Aux., 1 Alarm Contact, 400V AC	H, J, K, M, N, NS
FB	2 Aux. Contacts, 400V AC	
Blank	No Selection	G, H, I, J, K, M, N, R

(1) Select up to two internal options: 1 for left side mounting (shunt trip or undervoltage release), 1 for right (auxiliary or alarm contact).
(2) When the MCCB has been configured for remote operation (Table 120), you can select only one undervoltage release. Additional shunt trip is not available for factory installation, but can be field assembled.

Table 120 - Options for Remote MCCB Operation(1)

Spring Charge Motor		
Code	**Description**	**Frame Size**
MJ	Spring Charge Motor, 24...30V AC/DC	NS, R
MK	Spring Charge Motor, 48...60V AC/DC	
MD	Spring Charge Motor, 110...130V AC/DC	
MA	Spring Charge Motor, 220...250V AC/DC	
MB	Spring Charge Motor, 380...415V AC	NS
Blank	No Selection	NS, R

Shunt Trip and Shunt Close Units for Spring Charge Motor		
Code	**Description**	**Frame Size**
RJ	Shunt Trip and Shunt Close, 24V AC/DC	NS, R
RK	Shunt Trip and Shunt Close, 48V AC/DC	
RD	Shunt Trip and Shunt Close, 110...120V AC/DC	
RA	Shunt Trip and Shunt Close, 220...240V AC/DC	
RB	Shunt Trip and Shunt Close, 380...400V AC	
Blank	No Selection	NS, R

(1) Select one internal option for inner right mounting (shunt trip or undervoltage release). Consult your local Rockwell Automation sales office or Allen-Bradley distributor.

Table 121 - Mounting Options

Busbar Adapter Options	
Code	**Description**
MT	Top feed (branch) connection for G- and H-Frame, supplied with factory-installed line- and load-side lugs
MB	Bottom feed (main) connection for G- and H-Frame, supplied with factory-installed line- and load-side lugs
MU	Universal (top or bottom) connection for J- and K-Frame, supplied unassembled.(1)

(1) Lugs are not required or included. If your application requires terminal lugs, see Table 160 for compatible options. Lugs must be installed on the side of the unit that is not connected to the adapter.

Photos in this section are representative. Appearance of actual accessory may differ from the photo shown.

Internal Accessories

Table 122 - Auxiliary and Alarm Contacts (AX/AL/TUAL)

	Description	Rated Voltage	Contact Type	No. of Contacts			Electrical Diagram	Frame Size	Cat. No.[1]
				Auxiliary	Alarm	Trip Unit Alarm			
	Auxiliary/Trip Unit Contact • Indicates ON/OFF status of the MCCB. • Form C-style switches for internal MCCB wiring snap-fit into internal pockets of the device • Supplied with 1 m (39 in.) pig tail wiring, with each terminal wire labeled – Frames G/H/I/J/K/M • Terminated with a 3-pin quick connector (140G-N-CIC) – N/NS frames • Frame R is wired internal to the breaker and can be terminated at the terminal strip • Designation: AX1/AX2/AX3/AX4) • See Table 5 for contact function description • UL 489, CCC for: – 140G-G-EA1A – 140G-G-EA1R1A – 140G-EA2R1A, – 140G-H-EA3R1A – 140G-H-EA3R2A – 140G-H-EA2R2TA – 140G-H-EA1TA	250V AC	Auxiliary	1	–	–	Figure 14	G, H, I, J	140G-G-EA1A
			Auxiliary or alarm	1 or 1		–	Figure 14 or Figure 15	G, H, I, J	140G-G-EA1AU[2]
			Trip unit alarm	–	–	1	Figure 16	H, J	140G-H-EA1TA
			Auxiliary, alarm, and trip unit alarm combination	1	1	–	Figure 17	G, H, I, J	140G-G-EA1R1A
				2	1	–	Figure 18	G, H, I, J	140G-G-EA2R1A
				3	1	–	Figure 19	H, I, J	140G-H-EA3R1A
				3	2	–	Figure 20	H, J	140G-H-EA3R2A
				2	2	1	Figure 21	H, J	140G-H-EA2R2TA
				1	1	–	Figure 22	K, M	140G-K-EA1R1A
				3	1	–	Figure 19	K, M	140G-K-EA3R1A
			Trip unit alarm	–	–	1	Figure 25	N, NS	140G-N-EA1TA
								R	140G-R-EA1TA
		24V DC, PLC [1]	Auxiliary	1	–	–	Figure 14	G, H, I, J	140G-G-EA1J
				2	–	–	Figure 22	N, NS	140G-N-EA2J
			Trip unit alarm	–	–	1	Figure 16	H, J	140G-H-EA1TJ
			Auxiliary and alarm combination	1	1	–	Figure 17	G, H, I, J	140G-G-EA1R1J
				3	1	–	Figure 19	H, I, J	140G-H-EA3R1J
								K, M	140G-K-EA3R1J
				1	1	–	Figure 23	N, NS	140G-N-EA1R1J
		400V AC [1]	Auxiliary	2	–	–	Figure 22	H, J	140G-H-EA2B
								K, M	140G-K-EA2B
							Figure 22	N, NS	140G-N-EA2B
			Auxiliary and alarm combination	1	1	–	Figure 16	H, J	140G-H-EA1R1B
							Figure 17	K, M	140G-K-EA1R1B
							Figure 23	N, NS	140G-N-EA1R1B
	Auxiliary/Trip Unit Contact • Indicates ON/OFF status of the MCCB. • Form C-style switches for internal MCCB wiring • Terminated with a 3-pin quick connector • Designation: AX1/AX2/AX3/AX4)	250V AC, 24V DC	Auxiliary or trip unit alarm	(3) 250V AC (1) 24V DC	–	–	Figure 24	R	140G-R-EA3A1JM
	Auxiliary Contact for Maintenance Mode • For LSIG-MM devices only	24V DC	Auxiliary and alarm combination	1	1	–	Figure 43	K	140G-K-CEAA
				1	1	–	Figure 43	M	140G-M-CEAA

(1) See page 123 for additional specifications, including AC and DC ratings.
(2) This contact is supplied with unmarked wires. The contact can function as either an auxiliary or alarm contact, depending on connection method.

Table 123 - Shunt Trips

Description			Diagram[1]	Frame Size	Cat. No.
	Shunt Trip • Allows remote tripping of the MCCB by applying control voltage to the shunt trip coil. • Supplied with 1 m (39 in.) pig tail wiring, with each terminal wire labeled – Frames G/H/I/J/K/M • Wired internal to the breaker – Frames N, NS, and R – Terminated with a (140G-N-CIC) 3-pin quick connector (Frames N, NS) • 140G-K-CC2 available for 2nd Shunt install for frames K and M – 2nd Shunt configuration is not compatible with Undervoltage Release (UVR) – 2nd Shunt application only available on 4-pole devices. • UL 489	12V DC	Figure 32	G, H, I, J	140G-G-SNR
		24...30V AC/DC			140G-G-SNJ
		48...60V AC/DC			140G-G-SNKY
		110...127V AC/110...125V DC			140G-G-SND
		220...240V AC/220...250V DC			140G-G-SNA
		380...440V AC			140G-G-SNB
		480...525V AC			140G-G-SNC
		12V DC	Figure 32	K, M[2]	140G-K-SNR
		24...30V AC/DC			140G-K-SNJ
		48...60V AC/DC			140G-K-SNKY
		110...127V AC/110...125V DC			140G-K-SND
		220...240V AC/220...250V DC			140G-K-SNA
		380...440V AC			140G-K-SNB
		480...525V AC			140G-K-SNC
	Shunt Trip • Allows remote tripping of the MCCB by applying control voltage to the shunt trip coil. • Wired internal to the breaker – Frames N, NS, and R – Terminated with a (140G-N-CIC) 3-pin quick connector (Frames N, NS) • UL 489	24V AC/DC	Figure 34	N, NS	140G-N-SNJ
		48V AC/DC			140G-N-SNKY
		110...120V AC/DC			140G-N-SND
		220...240V AC/DC			140G-N-SNA
		380...400V AC			140G-N-SNB
		24V DC	Figure 33	R	140G-R-SNJ
		48V AC/DC			140G-R-SNKY
		110...120V AC/DC			140G-R-SND
		220...240V AC/DC			140G-R-SNA
		380...400V AC			140G-R-SNB

(1) For N- and NS -Frame devices, terminals C1 and C2 are designated C11 and C12.
(2) 4-Pole devices require Cat. No. 140G-K-CC2 connector. See Table 124.

Table 124 - Shunt Trip Connector for 4-Pole Devices

	Description	Frame Size	Cat. No.
	Connector to mount shunt trip in third pole pocket for a 4-pole MCCB • 4-pole devices only	K, M	140G-K-CC2

Table 125 - Undervoltage Release Units

Description			Diagram	Frame Size	Cat. No.
	Undervoltage Release Unit • Opens the MCCB when supply voltage drops between 35...70% of the UV voltage rating • Trip rating from 0.7...0.35. • The MCCB can be reset when the supply voltage > 85% of the relay rating. • When the UV is de-energized, MCCB main contacts cannot close. • Supplied with 1 m (39 in.) pig tail wiring, with each terminal wire labeled – Frames G/H/I/J/K/M • Wired internal to the breaker – Frames N, NS, and R – Terminated with a (140G-N-CIC) 3-pin quick connector (Frames N, NS) • R Resistor is supplied with the MCCB when reset is required. • UL 489	24...30V AC/DC	Figure 36	G, H, I, J	140G-G-UVJ
		48V AC/DC			140G-G-UVKY
		60V AC/DC			140G-G-UVY
		110...127V AC/110...125V DC			140G-G-UVD
		220...240V AC/220...250V DC			140G-G-UVA
		380...440 V AC			140G-G-UVB
		480...525 V AC			140G-G-UVC
		24...30V AC/DC	Figure 36	K, M	140G-K-UVJ
		48V AC/DC			140G-K-UVKY
		60V AC/DC			140G-K-UVY
		110...127V AC/110...125V DC			140G-K-UVD
		220...240V AC/220...250V DC			140G-K-UVA
		380...440 V AC			140G-K-UVB
		480...525 V AC			140G-K-UVC
		24V AC/DC	Figure 36	N, NS	140G-N-UVJ
		60V AC/DC			140G-N-UVKY
		110...120V AC/DC			140G-N-UVD
		220...240V AC/DC			140G-N-UVA
		380...400V AC			140G-N-UVB
		415...440V AC			140G-N-UVC
		24V AC/DC	Figure 36	R	140G-R-UVJ
		60V AC/DC			140G-R-UVKY
		110...120V AC/DC			140G-R-UVD
		220...240V AC/DC			140G-R-UVA
		380...400V AC			140G-R-UVB
		415...440V AC			140G-R-UVC

Table 126 - Shunt Close (SNC) Units

Description			Diagram	Frame Size	Cat. No.
	Shunt Close Unit • Allows remote closing of the MCCB when the spring motor is charged. • Wired internal to the breaker – Frames N, NS, and R – Terminated with a (140G-N-CIC) 3-pin quick connector (Frames N, NS) • UL 489	24V AC/DC	Figure 35	NS	140G-NS-SNCJ
		48V AC/DC			140G-NS-SNCKY
		110...120V AC/DC			140G-NS-SNCD
		220...240V AC/DC			140G-NS-SNCA
		380...400V AC			140G-NS-SNCB
		24V AC/DC	Figure 35	R	140G-R-SNCJ
		48V AC/DC			140G-R-SNCKY
		110...120V AC/DC			140G-R-SNCD
		220...240V AC/DC			140G-R-SNCA
		380...400V AC			140G-R-SNCB

Table 127 - Trip Reset

	Description		Diagram	Frame Size	Cat. No.
	Trip Reset • Allows remote reset of MCCB following an overcurrent trip • Wired internal to the breaker – Frames N, NS, and R – Terminated with a (140G-N-CIC) 3-pin quick connector (Frames N, NS)	Form C, 24...30V AC/DC, PLC	Figure 31	NS	140G-NS-RRJ
		Form C, 110...130V AC/DC			140G-NS-RRD
		Form C, 200...230V AC/DC			140G-NS-RRA
		Form C, 24...30V AC/DC		R	140G-R-RRJ
		Form C, 110...130V AC/DC			140G-R-RRD
		Form C, 200...240V AC/DC			140G-R-RRA

Table 128 - Spring Charging Motor (SCM) for Remote Operation System

	Description		Diagram	Frame Size	Cat. No.
	Spring Charging Motor • Electric motor to recharge closing springs • Compatible with mechanical counter to measure operations completed with device (optional) • Remote Operation System also requires Shunt Trip (SNT) and Shunt Close (SNC). Trip Reset (RR) is recommended. • R-Frame device includes springs charged auxiliary contact feature • Wired internal to the breaker – Frames N, NS, and R – Terminated with a (140G-N-CIC) 3-pin quick connector (Frames N, NS)	24...30V AC/DC	Figure 49	NS	140G-NS-SCMJ
		48...60V AC/DC			140G-NS-SCMKY
		100...130V AC/DC			140G-NS-SCMD
		220...250V AC/DC			140G-NS-SCMA
		380...415V AC			140G-NS-SCMB
		220...250V DC		R	140G-R-SCMA
		110...130V AC/DC			140G-R-SCMD
		24...30V DC			140G-R-SCMJ
		48...60V AC/DC			140G-R-SCMKY

Table 129 - Signal Contacts for Remote Operation System

	Description		Diagram	Frame Size	Cat. No.
	Ready-to-Close (RTC) Auxiliary Contact • Recommended, but not required) for remote operation • Signals that the breaker is ready to accept closing (ON) command if: – breaker is open (OFF) – spring charging motor has fully charged the integral breaker springs – a shunt trip is de-energized (no signal to TRIP) – an undervoltage release is energized (no signal to TRIP) – the trip bar activation mechanism is energized • Wired internal to the breaker – Terminated with a (140G-N-CIC) 3-pin quick connector	Form C, 24V PLC	Figure 29	NS	140G-NS-RTCJ
		Form C, 250V			140G-NS-RTCA
	Springs Charged Auxiliary Contact • Recommended, but not required) for remote operation • signals that the spring charging motor has completely charged the integral breaker springs	Form C, 24V PLC	Figure 49	NS	140G-NS-SCJ
		Form C, 250V			140G-NS-SCA
	Trip Unit Alarm Contact • Signals when system has tripped, a fault needs to be evaluated, and system needs to be reset • See Table 122.				

Table 130 - Mechanical Counter for Remote Operation System

	Description	Frame Size	Cat. No.
	Mechanical Counter • Recommended, but not required) for remote operation • Indicates number of times the MCCB has been toggled from ON to OFF when it is installed with the spring charging motor • Operation count is visible through breaker front cover	NS	140G-N-MOC
		R	140G-R-MOC

External Accessories

Table 131 - Earth Leakage Protector (ELP) (Residual Current Release Module)—IEC Only

	Description	Diagram	Frame Size	3-Pole Cat. No.	4-Pole Cat. No.
	• Alarm and Trip indication • Test function • Protection against 30 mA (0.03 A) of earth (ground) fault currents • Compliant with IEC 60947-2 annex B, IEC 61000 for protection against unwarranted tripping • Installs surrounding the circuit breaker0.03 A with 0.0 s override • Current adjustment: 0.5...10 A • Time adjustment: 0.0...3.0 s	Figure 39	G	140G-G-ELP1603	140G-G-ELP1604
			H	—	140G-H-ELP1604
			I	140G-I-ELP2503	140G-I-ELP2504
			J	—	140G-J-EP2504
		Figure 40	K	—	140G-K-ELP

Table 132 - External Neutral Current Sensors (NCT)

	Description	Rated Current [A]	Diagram	Frame Size	Cat. No.
	External Neutral Current Sensor • Provides data to trip unit for external neutral current line in system. See page 16. • Measures current on neutral line not connected to breaker • Not compatible with MCP (140MG-K8P, 140MG-M8P, 140MG-N8P) or N/NS frame DIP LSI trip unit (140G-N_H_, 140G-NS_H_) • Supplied with 1 m (39 in.) pig tail wiring, with each terminal wire labeled • UL 489	300	Figure 42	K (1)	140G-K-NCTD30
		400		K (1)	140G-K-NCTD40
		600		M (1)	140G-M-NCTD60
		800		M (1)	140G-M-NCTD80
		400...1600	Figure 41	N, NS	140G-N-NCTE16
		1000...3200		R	140G-R-NCTE30

(1) Order with connector (Cat. No. 140G-K-CC).

Table 133 - Rating Plugs (RP) for I_n

	Description	Frame Size	Rated Current I_n [A]	Cat. No.
	• Supplied as standard on all N/NS/R frame devices matching trip unit's maximum rated current • Change rated current value I_n on compatible electronic trip units. – Protections are automatically adjusted to new rated current value. • Plugs acceptable 20...100% of frame rating. • Plugs above frame rating are not compatible.	N, NS	400	140G-NRP-D40
			600	140G-NRP-D60
			800	140G-NRP-D80
			1000	140G-NRP-E10
			1200 (1)	140G-NRP-E12
			1250 (IEC only)	140G-NRP-E125
		R	600	140G-NRP-D60
			800	140G-NRP-D80
			1000	140G-NRP-E10
			1200	140G-NRP-E12
			1600	140G-RRP-E16
			2000 (1)	140G-RRP-E20
			2500 (1)	140G-RRP-E25
			3000 (1)	140G-RRP-E30

(1) A 1200 A rating plug is supplied installed from the factory for all N-Frame MCCBs. A 2000 A, 2500 A, or 3000 A rating plug is supplied installed from the factory for all R-Frame MCCBs.

Table 134 - Maintenance Mode Connectors

	Description		Diagram	Frame Size	Cat. No.
	Maintenance Mode Connector • Connects signal input and output to LSIG-MM trip units to activate and validate maintenance mode. See page 28. • You must use both Cat. Nos. 140G-K-CC and 140G-K-CIC for maintenance mode. • Install to connector ports at back of K and M frame breakers • Not required for N/NS/R frames • Supplied with 1 m (39 in.) pig tail wiring, with each terminal wire labeled, and panel mount terminal	connections to: external neutral connection and MM control input	Figure 43	K, M	140G-K-CC
		connections to: 24V DC power supply and MM output for indication			140G-K-CIC

Table 135 - Rotary Variable Depth Operator (RVM/NVM) Kits with External Handle

	Description	Frame Size	Handle Color	Shaft Length	Cat. No.
	Rotary Variable Depth Operator Kit • Allows actuation and status indication of breaker states: On, Off, Trip, and Reset – Requires deliberate action to operate handle and turn breaker on when enclosure door is open – Internal handle must be pulled out before it can be turned, otherwise the handle retracts back onto the shaft and does not turn • IP40 protection against intrusion and accidental contact on the face of the device under IEC 60529. See Table 8 • Breaker can be mounted anywhere on the panel; operator is installed to face of breaker • Handle installs to the outside of the enclosure door – Frames G, H, I, and J use a Bul. 140U P-style handle – Frames K, M, and N use a Bul. 140U medium style handle • Kit contains: – External handle – Operating shaft – MCCB-mounted operating mechanism (RMX) – See page 98 to select as components. • See Table 148 for Early-Make and Early-Break Contact options • Standards Compliance: UL 489, CSA C22.2 No. 5, CSA C22.2 No. 94.2	G, I	Black	305 mm (12 in.)	140G-G-RVM12B
			Red/yellow		140G-G-RVM12R
			Black	533 mm (21 in.)	140G-G-RVM21B
			Red/yellow		140G-G-RVM21R
		H, J	Black	305 mm (12 in.)	140G-H-RVM12B
			Red/yellow		140G-H-RVM12R
			Black	533 mm (21 in.)	140G-H-RVM21B
			Red/yellow		140G-H-RVM21R
		K	Black	305 mm (12 in.)	140G-K-RVM12B
			Red/yellow		140G-K-RVM12R
			Black	559 mm (22 in.)	140G-K-RVM21B
			Red/yellow		140G-K-RVM21R
		M	Black	305 mm (12 in.)	140G-M-RVM12B
			Red/yellow		140G-M-RVM12R
			Black	559 mm (22 in.)	140G-M-RVM21B
			Red/yellow		140G-M-RVM21R
		N	Black	305 mm (12 in.)	140G-N-RVM12B
			Red/yellow		140G-N-RVM12R
			Black	559 mm (22 in.)	140G-N-RVM21B
			Red/yellow		140G-N-RVM21R

Table 136 - Rotary Variable Depth Operator (RVM/NVM) Kits with Internal NFPA 79 Operating Handle

	Description	Frame Size	Handle Color	Shaft Length	Cat. No.
	Rotary Variable Depth Operator Kit with NFPA 79 Handle • Allows actuation and status indication of breaker states: On, Off, Trip, and Reset – Requires deliberate action to operate handle and turn breaker on when enclosure door is open. – The internal handle must be pulled out before it can be turned, otherwise the handle retracts back onto the shaft and does not turn. • IP40 protection against intrusion and accidental contact on the face of the device under IEC 60529. See Table 8 • Breaker can be mounted anywhere on the panel; operator is installed to face of breaker • Handle installs to the outside of the enclosure door – Frames G, H, I, and J use a Bul. 140U P-style handle – Frames K, M, and N use a Bul. 140U medium style handle • Kit contains: – External handle – NFPA handle with operating shaft – MCCB-mounted operating mechanism (RMX) – Support bracket – See page 98 to select as individual components. • See Table 148 for Early-Make and Early-Break Contact options • Standards Compliance: UL 489, CSA C22.2 No. 5, CSA C22.2 No. 94.2	G, I	Black	305 mm (12 in.)	140G-G-NVM12B
			Red/yellow		140G-G-NVM12R
			Black	533 mm (21 in.)	140G-G-NVM21B
			Red/yellow		140G-G-NVM21R
		H, J	Black	305 mm (12 in.)	140G-H-NVM12B
			Red/yellow		140G-H-NVM12R
			Black	533 mm (21 in.)	140G-H-NVM21B
			Red/yellow		140G-H-NVM21R
		K	Black	305 mm (12 in.)	140G-K-NVM12B
			Red/yellow		140G-K-NVM12R
			Black	559 mm (22 in.)	140G-K-NVM21B
			Red/yellow		140G-K-NVM21R
		M	Black	305 mm (12 in.)	140G-M-NVM12B
			Red/yellow		140G-M-NVM12R
			Black	559 mm (22 in.)	140G-M-NVM21B
			Red/yellow		140G-M-NVM21R
		N	Black	305 mm (12 in.)	140G-N-NVM12B
			Red/yellow		140G-N-NVM12R
			Black	559 mm (22 in.)	140G-N-NVM21B
			Red/yellow		140G-N-NVM21R

Table 137 - Direct Rotary Operators (RMB/RMY)

	Description	Frame Size	Handle Color	Cat. No.
	• Mount with direct handle operation of the MCCB. • Lockable in OFF position (three padlocks max.). • Breaker can be mounted anywhere on the panel; operator is installed to face of breaker • Handle can protrude through the door when used with provided escutcheon plate • Allows actuation and status indication of breaker states: On, Off, Trip, and Reset • See Table 148 for Early-Make and Early-Break Contact options • Direct Rotary Operators achieve IP40 protection against intrusion and accidental contact on the face of the device under IEC 60529. See Table 8 for Ingress Protection details. • Standards Compliance: UL 489	G, I	Black	140G-G-RMB
			Red/yellow	140G-G-RMY
		H, J	Black	140G-H-RMB
			Red/yellow	140G-H-RMY
		K	Black	140G-K-RMB
			Red/yellow	140G-K-RMY
		M	Black	140G-M-RMB
			Red/yellow	140G-M-RMY
		N	Black	140G-N-RMB
			Red/yellow	140G-N-RMY

Table 138 - Through-the-door Rotary Handle (RTM) Operators

		Description	Frame Size	Handle Color	Cat. No.
		Through-the-door Rotary Operator • Controls the MCCB with the panel door open or closed • Lock out/tag out capability • No secondary handle required for NFPA 79 compliance • Eliminates cutting and aligning of extension shafts compared to other rotary operators • IP54/NEMA Type 13 ingress rating • Breaker can be mounted anywhere on the panel; handle is installed to face of breaker • Handle protrudes through the enclosure door • Allows actuation and status indication of breaker states: On, Off, Trip, and Reset • Standards Compliance: UL 489, CSA C22.2 No. 5, CSA C22.2 No. 94.2	G	Black	140G-G-RTMB
				Red/yellow	140G-G-RTMR
			H	Black	140G-H-RTMB
				Red/yellow	140G-H-RTMR
		Line- and load-side terminal covers for through-the-door operators • Package quantity: 2	G	—	140G-G-TC3T
			H	—	140G-H-TC3T
	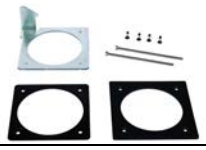	Replacement Hardware Kits • For use with through-the-door rotary operators • Kit contains: – Interior door bezel – Exterior door bezel – Door gasket – Two M4 x 100 mounting screws – Four M4 x 12 mounting screws	G H	Black	140G-NRTM-HDW-B
	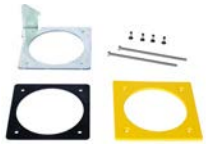			Red/yellow	140G-NRTM-HDW-R

Table 139 - Flexible Cable Operator (FC_/FM_) Kits for G- and H-Frame Devices

	Description	Frame Size	Handle Type	Cable Length	Cat. No.
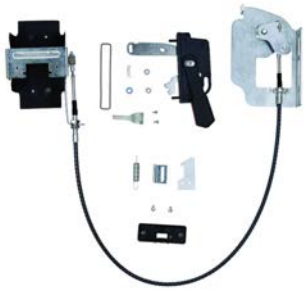	Flange-mounted Cable Operator Kit • Can be mounted anywhere on the panel; operator is installed to surround breaker • Flexible cable transmits handle motion to actuator at breaker • Allows actuation and status indication of breaker states: On, Off, Trip, and Reset • Includes handle, bail mechanism, cable, and assembly hardware • For 3-pole devices • For use with NEMA-style flange enclosures • Pre-assembled for ease of installation • Standards Compliance: UL 489, CSA C22.2 No. 5, CSA C22.2 No. 94.2	G	Non-metallic handle Type 1/3/3R/12/4/4X	0.91 m (3 ft.)	140G-G-FCXB03
				1.3 m (4 ft.)	140G-G-FCXB04
				1.9 m (6 ft.)	140G-G-FCXB06
				3.0 m (10 ft.)	140G-G-FCXB10
			Painted metal handle Type 1/3/3R/12/4/4X	0.91 m (3 ft.)	140G-G-FMXB03
				1.3 m (4 ft.)	140G-G-FMXB04
				1.9 m (6 ft.)	140G-G-FMXB06
				3.0 m (10 ft.)	140G-G-FMXB10
			Stainless handle(1) Type 4/4X	0.91 m (3 ft.)	140G-G-FCSB03
				1.3 m (4 ft.)	140G-G-FCSB04
				1.9 m (6 ft.)	140G-G-FCSB06
				3.0 m (10 ft.)	140G-G-FCSB10
		H	Non-metallic handle Type 1/3/3R/12/4/4X	0.91 m (3 ft.)	140G-H-FCXB03
				1.3 m (4 ft.)	140G-H-FCXB04
				1.9 m (6 ft.)	140G-H-FCXB06
				3.0 m (10 ft.)	140G-H-FCXB10
			Painted metal handle Type 1/3/3R/12/4/4X	0.91 m (3 ft.)	140G-H-FMXB03
				1.3 m (4 ft.)	140G-H-FMXB04
				1.9 m (6 ft.)	140G-H-FMXB06
				3.0 m (10 ft.)	140G-H-FMXB10
			Stainless handle(1) Type 4/4X	0.91 m (3 ft.)	140G-H-FCSB03
				1.3 m (4 ft.)	140G-H-FCSB04
				1.9 m (6 ft.)	140G-H-FCSB06
				3.0 m (10 ft.)	140G-H-FCSB10

(1) Stainless handles have a chrome-plated steel handle base.

Table 140 - Flexible Cable Operator (FC_/FM_) Kits for I-, J-, and K-Frame Devices

	Description	Frame Size	Handle Type	Cable Length	Cat. No.
	Flange -mounted Cable Operator Kit • Includes handle, bail mechanism, cable, and assembly hardware • For 3-pole devices • For use with NEMA-style flange enclosures • Pre-assembled for ease of installation • Breaker can be mounted anywhere on the panel; operator is installed to surround breaker • Flexible cable transmits handle motion to actuator at breaker • Allows actuation and status indication of breaker states: On, Off, Trip, and Reset • Standards Compliance: UL 489, CSA C22.2 No. 5, CSA C22.2 No. 94.2	I	Non-metallic handle Type 1/3/3R/12/4/4X	0.91 m (3 ft.)	140G-I-FCXB03
				1.3 m (4 ft.)	140G-I-FCXB04
				1.9 m (6 ft.)	140G-I-FCXB06
				3.0 m (10 ft.)	140G-I-FCXB10
			Painted metal handle Type 1/3/3R/12/4/4X	0.91 m (3 ft.)	140G-I-FMXB03
				1.3 m (4 ft.)	140G-I-FMXB04
				1.9 m (6 ft.)	140G-I-FMXB06
				3.0 m (10 ft.)	140G-I-FMXB10
			Stainless handle(1) Type 4/4X	0.91 m (3 ft.)	140G-I-FCSB03
				1.3 m (4 ft.)	140G-I-FCSB04
				1.9 m (6 ft.)	140G-I-FCSB06
				3.0 m (10 ft.)	140G-I-FCSB10
		J	Non-metallic handle Type 1/3/3R/12/4/4X	0.91 m (3 ft.)	140G-J-FCXB03
				1.3 m (4 ft.)	140G-J-FCXB04
				1.9 m (6 ft.)	140G-J-FCXB06
				3.0 m (10 ft.)	140G-J-FCXB10
			Painted metal handle Type 1/3/3R/12/4/4X	0.91 m (3 ft.)	140G-J-FMXB03
				1.3 m (4 ft.)	140G-J-FMXB04
				1.9 m (6 ft.)	140G-J-FMXB06
				3.0 m (10 ft.)	140G-J-FMXB10
			Stainless handle(1) Type 4/4X	0.91 m (3 ft.)	140G-J-FCSB03
				1.3 m (4 ft.)	140G-J-FCSB04
				1.9 m (6 ft.)	140G-J-FCSB06
				3.0 m (10 ft.)	140G-J-FCSB10
		K	Non-metallic handle Type 1/3/3R/12/4/4X	0.91 m (3 ft.)	140G-K-FCXB03
				1.3 m (4 ft.)	140G-K-FCXB04
				1.9 m (6 ft.)	140G-K-FCXB06
				3.0 m (10 ft.)	140G-K-FCXB10
			Painted metal handle Type 1/3/3R/12/4/4X	0.91 m (3 ft.)	140G-K-FMXB03
				1.3 m (4 ft.)	140G-K-FMXB04
				1.9 m (6 ft.)	140G-K-FMXB06
				3.0 m (10 ft.)	140G-K-FMXB10
			Stainless handle(1) Type 4/4X	0.91 m (3 ft.)	140G-K-FCSB03
				1.3 m (4 ft.)	140G-K-FCSB04
				1.9 m (6 ft.)	140G-K-FCSB06
				3.0 m (10 ft.)	140G-K-FCSB10

(1) Stainless handles have a chrome-plated steel handle base.

Table 141 - Flexible Cable Operator (FC_/FM_) Kits for M- and N-Frame Devices and Left-hand Brackets

	Description	Frame Size	Handle Type	Cable Length	Cat. No.
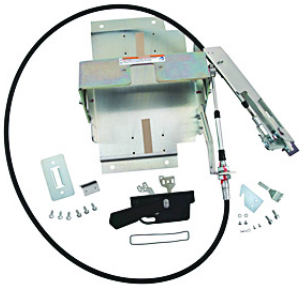	Flexible Cable Operator Kit • For use with NEMA-style flange enclosures. • Includes handle, MCCB operator, cable, and necessary hardware. • Pre-assembled for ease of installation. • Breaker can be mounted anywhere on the panel; operator is installed to surround breaker • Flexible cable transmits handle motion to actuator at breaker • Allows actuation and status indication of breaker states: On, Off, Trip, and Reset • Standards Compliance: UL 489, CSA C22.2 No. 5, CSA C22.2 No. 94.2 • Replacement Hardware is listed on page 98	M	Non-metallic Handle Type 1/3/12/4/4X	1.3 m (4 ft.)	140G-M-FCX04
				1.9 m (6 ft.)	140G-M-FCX06
				3.0 m (10 ft.)	140G-M-FCX10
			Stainless handle[1] Type 4/4X	1.3 m (4 ft.)	140G-M-FCS04
				1.9 m (6 ft.)	140G-M-FCS06
				3.0 m (10 ft.)	140G-M-FCS10
			Painted Metal Handle Type 1/12	1.3 m (4 ft.)	140G-M-FMX04
				1.9 m (6 ft.)	140G-M-FMX06
				3.0 m (10 ft.)	140G-M-FMX10
		N	Non-metallic Handle Type 1/3/12/4/4X	1.3 m (4 ft.)	140G-N-FCX04
				1.9 m (6 ft.)	140G-N-FCX06
				3.0 m (10 ft.)	140G-N-FCX10
	Left-hand flange-mount bracket • relocates cable to left side • ideal for enclosures less than 15 in. (38.1 cm) deep	M	–	–	140G-BML
		N	–	–	140G-BNL

(1) Stainless handles have a chrome-plated steel handle base.

Table 142 - Variable Depth Flange-mounted Circuit Breaker Operating Mechanism

	Description	Compatible 3-Pole Circuit Breaker[1]		Cat. No.
		Frame Size [A]	Frame Size	
	• Allows actuation and status indication of breaker states: On, Off, Trip, and Reset • Standards Compliance: UL 489, CSA C22.2 No. 5, CSA C22.2 No. 94.2 • Breaker must be installed directly behind flange handle cutout – Operator is installed to surround breaker • Complete mechanism consists of – Operating mechanism (Table 142) and handle (Table 144) – Connecting Rod (Table 143) – Insulation Kit (if required) (Table 146) – Auxiliary contacts (if required) (Table 145)	125, 225, 250	G, H, I, J	1494V-M70
		400	K	1494V-M71
		800, 1200	M, N	1494V-M72

(1) Circuit breakers are customer supplied.

The mechanism that is listed in Table 142 must be combined with a connecting rod, operating handle, and a circuit breaker (supplied by customer) to obtain a functional device. G-, H-, I-, and J-Frame devices require an insulation kit (Table 146).

Table 143 - Connecting Rods for Circuit Breaker Operating Mechanism

	Circuit Breaker Frame Size [A]	Enclosure Working Depth [in. (mm)]		Cat. No.
		Minimum	Maximum	
	125, 150, 225, 250	6-3/4 (172)	21-5/8 (549)	1494V-RA4
	400	8-1/2 (216)	21-5/8 (549)	1494V-RA4
	800, 1200	9-1/2 (241)	23 (584)	1494V-RB4

Table 144 - Operating Handle for Circuit Breaker Operating Mechanism

	Handle Type	Description	Circuit Breaker Frame Size [A]	Operating Handle Cat. No.
	Type 1, 3R, 4, 4X, 12	Nonmetallic	125, 150, 250, 400	1494U-HP1
	Type 1, 3R, 4, 12	Painted Metal	125, 150, 250, 400	1494U-HM1
	Type 4, 4X	Stainless(1)	125, 150, 250, 400	1494U-HS1
	Type 1, 3R, 4, 12	Painted Metal	800, 1200	1494F-M2
	Type 4, 4X	Stainless(1)	800, 1200	1494F-S2

(1) Stainless handles have a chrome-plated steel handle base.

Table 145 - Auxiliary Contacts for Circuit Breaker Operating Mechanism

	Description	For Use With	Contact Type	Cat. No.
	Auxiliary Contact Kit for Circuit Breakers • includes contacts and adapter	125...1200 A Allen-Bradley Bul. 140G Circuit Breakers	1 N.O.	1495-N85
			1 N.C.	1495-N86

Table 146 - Insulation Kit for Circuit Breaker Operating Mechanism

	Description	For Use With	Cat No.
	Insulation Kit	140G-G, 140MG-G 140G-H, 140MG-H 140G-I, 140MG-I 140G-J, 140MG-J	1495-N87

Table 147 - Stored Energy Motor Operators (EOP)

Description				Diagram	Frame Size	Cat. No.
	• Remotely opens, closes, and resets the MCCB. • Breaker can be mounted anywhere on the panel; operator is installed to face of breaker • Manual: Uses a lever to charge a spring mechanism, which actuates the toggle at the press of a button. • Automatic: Uses signaling control for remote opening and closing of the circuit breaker by driving an electric motor to charge the manual springs. • Includes integral padlock for OFF position and 1 m (39 in.) wiring terminated in socket-plug connectors. • Standards Compliance: UL 489	• Supplied with: – auto/manual selector – test feature – special tool for local operation of the MCCB.	24V DC	Figure 45	G, I	140G-G-EOPJ
			48...60V DC			140G-G-EOPKY
			110...125V AC/DC			140G-G-EOPD
			220...250V AC/DC			140G-G-EOPA
			380...440V AC			140G-G-EOPB
			480...525V AC			140G-G-EOPC
		• Uses a stored energy motor for local control of the motor without the use of special tools and includes: – auto/manual/lock selection – lever to recharge the motor – open/close push button operation.	24V DC	Figure 47	H, J	140G-H-EOPJ
			48...60V DC			140G-H-EOPKY
			110...125V AC/DC			140G-H-EOPD
			220...250V AC/DC			140G-H-EOPA
			380...440V AC			140G-H-EOPB
			480...525V AC			140G-H-EOPC
			24V DC	Figure 46	K	140G-K-EOPJ
			48...60V DC			140G-K-EOPKY
			110...125V AC/DC			140G-K-EOPD
			220...250V AC/DC			140G-K-EOPA
			380V AC			140G-K-EOPB
			24V DC	Figure 46	M	140G-M-EOPJ
			48...60V DC			140G-M-EOPKY
			110...125V AC/DC			140G-M-EOPD
			220...250V AC/DC			140G-M-EOPA
			380V AC			140G-M-EOPB

Motor-operated circuit breakers are used in applications where switching is done infrequently and are not suitable to replace contactors for switching applications.

Table 148 - Early-Make and Early-Break Signal Contacts (EAM/EAB) for Auxiliary Contact Handle Mechanism

	Description		For Use With[1]	Frame Size	Diagram	Pkg. Qty	Cat. No.
	Auxiliary Contact for Early Make Handle • Typically used with an undervoltage release • Contacts close before the MCCB main contacts • Supplies power to the undervoltage release, which helps prevent nuisance tripping of the relay • Supplied with 1 m (39 in.) pig-tail wiring (each terminal wire is marked)	Open 400V	• 140G-G-RMB, -RMY, RMX • 140G-H-RMB, -RMY, RMX	G, H, I, J	Figure 26, Figure 27	2	140G-G-EAM1B
		Close 250V	• 140G-K-RMB, -RMY, RMX	K	Figure 26	2	140G-K-EAM1A
			• 140G-M-RMB, -RMY, RMX	M	Figure 26		140G-M-EAM1A
	Auxiliary Contact for Early Break Handle • Removes system voltage from electronics that could be damaged by transient voltage caused by the opening of the MCCB main contacts • Supplied with 1 m (39 in.) pig-tail wiring (each terminal wire is marked)	Close 400V	• 140G-G-RMB, -RMY, RMX • 140G-H-RMB, -RMY, RMX	G, H, I, J	Figure 28	2	140G-G-EAB1B

(1) Mounted inside rotary mechanism or direct handle. Not compatible with other handles.

Table 149 - Phase Barriers

	Description	Frame Size	Length	3-Pole Cat. No. (Pkg. Qty. 4)	4-Pole Cat. No. (Pkg. Qty. 6)
	Phase Barriers • Provide additional clearance when special connections that extend beyond the frame of the MCCB are used. • Insulation between phases at terminal connections using individual flexible barriers • Extended length options for extended and spread terminal applications • Front mounted, even with the circuit breaker and terminal connections already installed • Frames G, H, I, J, and K are supplied with 25 mm (1 in.) barriers as standard.	G, I	25 mm (1 in.)	140G-G-PB3M	140G-G-PB4M
			100 mm (4 in.)	140G-G-PB3L	140G-G-PB4L
			200 mm (8 in.)	140G-G-PB3H	140G-G-PB4H
		H, J	25 mm (1 in.)	140G-H-PB3M	140G-H-PB4M
			100 mm (4 in.)	140G-H-PB3L	140G-H-PB4L
			200 mm (8 in.)	140G-H-PB3H	140G-H-PB4H
		K, N, NS	100 mm (4 in.)	140G-K-PB3L	140G-K-PB4L
			200 mm (8 in.)	140G-K-PB3H	140G-K-PB4H
		M	100 mm (4 in.)	140G-M-PB3L	140G-M-PB4L
		R	100 mm (4 in.)	140G-R-PB3L[1]	140G-R-PB4L[2]
			200 mm (8 in.)	140G-R-PB3H[1]	140G-R-PB4H[2]

(1) Package Qty 2. supplied for the line side only.
(2) Package Qty 3. supplied for the line side only.

Table 150 - Terminal Covers

	Description		Frame Size	Height	Pkg Qty	Cat. No. 3-Pole	Cat. No. 4-Pole
	Terminal Cover • Helps prevent accidental contact with live parts • Front mounted, even with the circuit breaker and terminal connections already installed • Provides phase-to-phase insulation using a molded plastic cover • Pre-punched to simplify installation. • Supplied as standard with the selection of multiple cable terminal lugs. See Table 151 • Not for use with spreader terminals.	High Covers • IP40 protection against intrusion and accidental contact at terminals under IEC 60529. See Table 8	G	50 mm (2 in.)	2	140G-G-TC3H	140G-G-TC4H
			H	50 mm (2 in.)		140G-H-TC3H	140G-H-TC4H
			I	60 mm (2.4 in.)		140G-I-TC3H	140G-I-TC4H
			J	60 mm (2.4 in.)		140G-J-TC3H	140G-J-TC4H
			K	60 mm (2.4 in.)		140G-K-TC3H	140G-K-TC4H
			M	60 mm (2.4 in.)		140G-M-TC3H	140G-M-TC4H
			N, NS	70 mm (2.75 in.)		140G-N-TC3H	140G-N-TC4H
		Low Covers • IP30 protection at terminals	G	at terminal (no extended height)	2	140G-G-TC3L	140G-G-TC4L
			H			140G-H-TC3L	140G-H-TC4L
			I			140G-I-TC3L	140G-I-TC4L
			J			140G-J-TC3L	140G-J-TC4L
			K			140G-K-TC3L	140G-K-TC4L
			M			140G-M-TC3L	140G-M-TC4L
			N, NS			140G-N-TC3L	140G-N-TC4L

Table 151 - Sealable Screws (TS)

	Description	Frame Size	Pkg. Qty.	Cat. No.
	Terminal Cover Seal Kit • Tamper seals for terminal cover mounting screws • Provides protection against tampering with installed terminal cover. • Supplied with two screws and two seals. – One kit sufficient for one terminal cover • Sealing wire and lead are customer supplied. • Quantity one required for Line cover, one required for Load cover.	G, H, I, J	2	140G-G-TS
		K	2	140G-K-TS
		M, N, NS	2	140G-M-TS

Table 152 - IP30 Escutcheon Frames

	Description	For Use With	Frame Size	Cat. No.
	IP 30 Escutcheon Plates • Finish Frame with Marking provision window • For flush mounted (to door) MCCB applications	3-pole devices	G	140G-G-EP3
		4-pole devices		140G-G-EP4
		3-pole devices	H	140G-H-EP3
		4-pole devices		140G-H-EP4
		3-pole devices	I	140G-I-EP3
		4-pole devices		140G-I-EP4
		3-pole devices	J	140G-J-EP3
		4-pole devices		140G-J-EP4
		3- and 4-pole devices	K	140G-K-EP
			M	140G-M-EP
			N, NS	140G-N-EP
			R	140G-R-EP

Table 153 - IP54 Protective Covers

	Description	Frame Size	Cat. No.
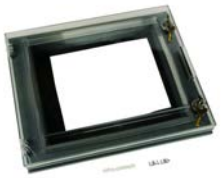	IP54 Protective Covers • Transparent plastic cover that is flush mounted to the enclosure door • Mounted on hinges and provided with a keyed lock	N, NS	140G-N-BC12
		R	140G-R-BC12

Padlock Adapters

Table 154 - Padlock Adapters

	Description	Frame Size	Cat. No.
	Padlockable Handle Block • Allows padlocking of the device into the OFF position • Padlocking hasp • Lock-OFF only • Metal construction	G, I	140G-G-PL
		H, J	140G-H-PL
		N	140G-N-PL
		NS	140G-NS-PL
		R	140G-R-PL
	Padlocking Flange • Allows padlocking of the device into the OFF position • Supplied with toggle extension and escutcheon. Lock-OFF only	K	140G-K-TPA
		M	140G-M-TPA

Table 155 - Door Interlock (SINT)

	Description	Frame Size	Cat. No.
	Direct Mechanical Lock to Door • Trips breaker when enclosure door is opened unless deliberately defeated using defeater feature • Mechanically links trip bar in breaker to the enclosure door's position; when door is opened, breaker is tripped • Installs on the right side of NS or R breakers – Not compatible with breakers that have a toggle mechanism • Includes defeater mechanism for deliberate operation by qualified personnel while breaker is ON	NS	140G-N-SINT
		R	140G-R-SINT

Table 156 - EZ-Plate Mounting Adapters

	Description	Frame Size	Cat. No.
	Optional EZ Plate • Converts breakers from standard panel mounting screws to 1/4 in. (6.4 mm) sheet metal screws • Eliminates precision drilling and tapping for MCCB mounting screws • Kit includes plate with mounting fasteners • Works with both MCCBs and bail operators	G, H	140G-G-EZ
		I, J, K	140G-J-EZ

Table 157 - DIN Rail Adapters (DRA)

	Description	For Use With	Frame Size	Cat. No.
	DIN Rail Adapter • Converts breakers from standard panel mounting screws to snap onto DIN Rail • Compatible with IEC/EN 60715 - 35 × 7.5 and IEC/EN 60715 - 35 × 15 top hat rail • Adapts to 35 mm DIN Rail	3-pole devices	G	140G-G-DRA
		4-pole devices		140G-G-DRA4
		3-pole devices	H	140G-H-DRA
		4-pole devices		140G-H-DRA4
		3-pole devices	I	140G-I-DRA
		4-pole devices		140G-I-DRA4
		3-pole devices	J	140G-J-DRA
		4-pole devices		140G-J-DRA4

Table 158 - Mounting Adapter Plates for Bulletin 140U MCCBs

	Description	Frame Size	Cat. No.
	Mounting Adapter Plate • Convert 140U mounting holes to 140G mounting pattern to install replacement MCCB	G, H	140G-G-PRA
		J	140G-J-PRA

Table 159 - Troubleshooting Accessories

	Description	Frame Size	Cat. No.
	Trip Test Battery • Supplies temporary battery power for settings changes and troubleshooting	H J K M (LSI, LSIG, MM) N/NS (LSI)	140G-ELTT
	Battery Unit • Used to interrogate the last trip of the MCCB when supplemental control power is not present or is lost • Use with LSIG and LSIG-MM breakers	N NS R	140G-ELBU

Terminal Accessories

Bulletin 140G Terminal lugs are compatible with solid and stranded cable of stranding class AA, A, B, and C. Flexible fine-stranded cable found in stranding class D, G, H, DLO, I, K, and M (example: welding cable) is not compatible because of the clamping contact necessary within the lug. Applications that require flexible cable may use a UL Listed crimp lug with the integral terminal and end cap of the breaker instead of a machined lug.

Table 160 - Terminal Lugs (TLA/TLC/MTL[1])

	Description	Conductor Type	No. of Conductors	Wire Size		Frame Size	Cat. No.	
				[mm²]	[AWG]		Pkg. Qty. 3	Pkg. Qty. 4
	Terminal Lugs (TLA/TLC/MTL) • Convert standard breaker terminals to accommodate desired size of line and load wiring • Screws are supplied for voltage tap • Multi-terminal Lugs (MTL) – available with 6 connections of smaller-diameter wire for ease of installation • Standards Compliance – UL 489, CSA C22.2 No. 5	Cu wire	1	2.5...70	14...1/0	G	140G-G-TLC13[2]	140G-G-TLC14
				15...70	14...1/0		140G-G-TLC13A[3]	140G-G-TLC14A[3]
		Multiple cables - Cu wire	6	2.5...35	14...2		140G-G-MTL63[4]	140G-G-MTL64[4][5]
		Cu wire	1	2.5...95	14...1/0	H	140G-H-TLC13	140G-H-TLC14
		Multiple cables - Cu wire	6	2.5...35	14...2		140G-H-MTL63[4][5]	140G-H-MTL64[4][5]
		Al or Cu wire	1	2.5...50	14...1/0	I	140G-I-TLA13	140G-I-TLA14
			1	25...150	4...300 MCM		140G-I-TLA1A3	140G-I-TLA1A4
		Cu wire	1	6...185	10...250 MCM		140G-I-TLC13	140G-I-TLC14
		Multiple cables - Cu wire	6	2.5...35	12...2		140G-I-MTL63[4][5]	140G-I-MTL64[4][5]
		Al or Cu wire	1	2.5...50	14...1/0	J	140G-J-TLA13	140G-J-TLA14
			1	25...150	4...300 MCM		140G-J-TLA1A3	140G-J-TLA1A4
		Cu wire	1	6...185	10...250 MCM		140G-J-TLC13	140G-J-TLC14
			1	120...185	250...350 MCM		140G-J-TLC1A3	140G-J-TLC1A4
		Multiple cables - Cu wire	6	2.5...35	12...2		140G-J-MTL63[4][5]	140G-J-MTL64[4][5]
		Al or Cu wire	1	95...185	3/0 AWG ...350 MCM		140G-J-TLA1B3	140G-J-TLA1B4
	Terminal Lugs (TLA/TLC/MTL) • Convert standard breaker terminals to accommodate desired size of line and load wiring • Screws are <u>not</u> supplied for voltage tap • Multi-terminal Lugs (MTL) – available with 6 connections of smaller-diameter wire for ease of installation • Standards Compliance – UL 489, CSA C22.2 No. 5	Al or Cu wire Al or Cu wire	1	120...240	250...500 MCM	K	140G-K-TLA13	140G-K-TLA14
			2	95...120	2/0...250 MCM		140G-K-TLA23[5]	140G-K-TLA24[5]
			2	95...240	3/0...500 MCM		140G-K-TLA2A3	—
		Cu wire	1	120...240	250...500 MCM		140G-K-TLC13	140G-K-TLC14
			2	95...120	2/0...250 MCM		140G-K-TLC23[5]	140G-K-TLC24[5]
		Multiple cables - Cu wire	6	16...50	6...1/0		140G-K-MTL63[4][5]	140G-K-MTL64[5]
		Al or Cu wire	2	120...240	250...500 MCM	M	140G-M-TLA23	140G-M-TLA24
			3	70...185	2/0...400 MCM		140G-M-TLA33[5]	140G-M-TLA34[5]
		Cu wire	2	85...185	3/0...350 MCM		140G-M-TLC23	140G-M-TLC24
			3	70...185	2/0...350 MCM		140G-M-TLC33[5]	140G-M-TLC34[5]
		Al or Cu wire	2	...	500...750 MCM		140G-M-TLA2A3[6]	—
		Al or Cu wire	4	120...240	4/0...500 MCM	N, NS	140G-N-TLA43[5]	140G-N-TLA44[5]
		Cu wire	4	120...240	4/0...500 MCM		140G-N-TLC43[5]	140G-N-TLC44[5]
		Al or Cu wire	3	—	500...750 MCM		140G-N-TLA33[6]	140G-N-TLA34[6]
			6	50...400	1/0...750 MCM	R	140G-R-TLA63	—
		Cu wire	6	50...400	1/0...750 MCM		140G-R-TLC63	—

(1) For applications that follow the UL guidelines for panel SCCR: use of multiple wire termination on the load size lets the termination be rated at the SCCR level of the circuit breaker, which may allow a higher SCCR than may be available using a separate power distribution block.
(2) Molded case circuit breaker only
(3) Motor circuit protector only.
(4) Multiple cable lugs for use with load side connectors only.
(5) Includes the High Terminal cover.
(6) Screws are supplied for voltage tap.

Table 161 - Extended Terminals (EXT)

	Description	Supplied With	Frame Size	3-Pole Cat. No. (Pkg. Qty. 3)	4-Pole Cat. No. (Pkg. Qty. 4)
	Extended terminals for busbar or ring type connection (crimp lugs) • Standards Compliance – UL 489, CSA C22.2 No. 5 • See Table 239 and Table 240 for breaker terminal connection limits • See Table 241 for extended spreader terminal limits	• 100 mm (4 in.) phase barrier (140G-G-PB_L)	G	140G-G-EXT3	140G-G-EXT4
		• extended back plate • 100 mm phase barrier (140G-H-PB_L) • high terminal cover (140G-H-TC_H or 140G-J-TC_H)	H	140G-H-EXT3	140G-H-EXT4
		• 100 mm (4 in.) phase barrier (140G-G-PB_L)	I	140G-I-EXT3	140G-I-EXT4
		• extended back plate • 100 mm phase barrier (140G-H-PB_L) • high terminal cover (140G-H-TC_H or 140G-J-TC_H)	J	140G-J-EXT3	140G-J-EXT4
		• extended back plate • 100 mm phase barrier (140G-K-PB_L)	K	140G-K-EXT3(1)	140G-K-EXT4(1)
		• terminals only	M	140G-M-EXT3(1)	140G-M-EXT4(1)
		• extended back plate • 100 mm phase barrier (140G-K-PB_L)	N, NS	140G-N-EXT3(1)	140G-N-EXT4(1)

(1) IEC only.

Table 162 - Spreader Terminals (EXS)

	Description	Supplied With	Frame Size	3-Pole Cat. No. (Pkg. Qty. 3)	4-Pole Cat. No. (Pkg. Qty. 4)
	Spreader terminals for busbar or ring type connection (crimp lugs) • Convert standard breaker terminals to extended and spread position for busbar or ring-type connection • Standards Compliance – UL 489, CSA C22.2 No. 5 • See Table 239 and Table 240 for breaker terminal connection limits • See Table 241 for extended spreader terminal limits	• 200 mm (8 in.) phase barrier (140G-H-PB_H)	G	140G-G-EXS3	140G-G-EXS4
		• extended back plate • 200 mm (8 in.) phase barrier (140G-H-PB_H) • high terminal cover (140G-H-TC_H or 140G-J-TC_H)	H	140G-H-EXS3	140G-H-EXS4
		• 200 mm (8 in.) phase barrier (140G-H-PB_H)	I	140G-I-EXS3	140G-I-EXS4
		• extended back plate • 200 mm (8 in.) phase barrier (140G-H-PB_H) • high terminal cover (140G-H-TC_H or 140G-J-TC_H)	J	140G-J-EXS3	140G-J-EXS4
		• extended back plate • 200 mm (8 in.) phase barrier (140G-K-PB_H)	K	140G-K-EXS3(1)	140G-K-EXS4(1)
		• terminals only	M	–	140G-M-EXS4(1)
		• extended back plate • 200 mm (8 in.) phase barrier (140G-K-PB_H)	N, NS	–	140G-N-EXS4(1)
		• terminals only	R	140G-R-EXS3(1)	140G-R-EXS4(1)
	Top spreader terminals for busbar or ring type connection • Convert standard breaker terminals to extended and spread position for busbar or ring-type connection • See Table 239 and Table 240 for breaker terminal connection limits • See Table 241 for extended spreader terminal limits	• terminals only	M	140G-M-EXSLI3(1)	–
		• extended back plate • 200 mm (8 in.) phase barrier (140G-K-PB_H)	N, NS	140G-N-EXSLI3(1)	–
	Bottom spreader terminals for busbar or ring type connection • Convert standard breaker terminals to extended and spread position for busbar or ring-type connection • See Table 239 and Table 240 for breaker terminal connection limits • See Table 241 for extended spreader terminal limits	• terminals only	M	140G-M-EXSLO3(1)	–
		• extended back plate • 200 mm (8 in.) phase barrier (140G-K-PB_H)	N, NS	140G-N-EXSLO3(1)	–

(1) IEC only

Table 163 - Rear Terminals (TLH/TLV ; IEC Only)

Description		Frame Size	3-Pole Cat. No. (Pkg. Qty. 3)	4-Pole Cat. No. (Pkg. Qty. 4)
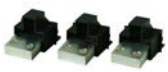	Rear flat horizontal terminals • Convert standard breaker terminals to attach to vertical or horizontal busbar	N, NS	140G-N-TLH3	140G-N-TLH4
	Rear flat vertical terminals • Convert standard breaker terminals to attach to vertical or horizontal busbar	N, NS	140G-N-TLV3	140G-N-TLV4
		R(1)	140G-R-TLV3	140G-R-TLV4

(1) 2000 A (80/100%) and 2500 A (80%) MCCBs only.

Table 164 - Bulletin 141A Busbar Mounting Adapters(1)

	Description		Frame Size	Thermal Current I_{th} [A]	Width [mm (in.)]	Cat. No.
	Busbar adapter with flexible connection • Convert standard breaker terminals to attach to horizontal busbar • Configurations include: – Top feed (branch applications) – bottom feed (main applications) – universal • Adapters clamp or plug directly on to the busbar • For 5 mm or 10 mm thick busbar • Requires terminal lugs for adapter connection – Lugs not included. See Table 165	top feed	G, H	125	90 (3.54)	141A-GHT
		bottom feed	G, H		90 (3.54)	141A-GHB
	Busbar adapter with rear connecting studs(2) • Convert standard breaker terminals to attach to horizontal busbar • Configurations include: – Top feed (branch applications) – bottom feed (main applications) – universal • Adapters clamp or plug directly on to the busbar • Requires terminal lugs for adapter connection • For 5 mm or 10 mm thick busbar	top or bottom feed	J	250	105 (4.13)	141A-GJU
		top or bottom feed	K	400	140 (5.51)	141A-GKU

(1) For factory-installed mounting options, see Table 121
(2) Lugs are not required or included. If your application requires terminal lugs, see Table 160 for compatible options. Lugs must be installed on the side of the unit that is not connected to the adapter.

Table 165 - Compatible Terminal Lugs for Busbar Adapter Mounting

	Description	Frame Size	For Use With	Pkg. Qty	Cat. No.
	Cu wire, two required per busbar adapter (1) 14...1/0 AWG or 2.5...70 mm^2	G	MCCB only	3	140G-G-TLC13
	Cu wire, two required per busbar adapter (1) 14...1/0 AWG or 1.5...70 mm^2		MCP only		140G-G-TLC13A
	Cu wire, two required per busbar adapter (1) 14...1/0 AWG or 2.5...95 mm^2	H	All		140G-H-TLC13

Replacement Parts

Photos in this section are representative. Appearance of actual product may differ from the photo shown.

All 140G MCCBs are furnished with end caps mounted on the circuit breaker as standard. Replacement end cap kits are available.

Many customers prefer to use a "crimp-on" ring lug (ring tongue terminal) or forked terminal as the wire termination method to the MCCB. Others prefer wire connection to a terminal lug. We offer a broad selection of terminal lugs to meet specific application requirements.

Table 166 - Replacement End Caps (ECM)

	Description	Frame Size	3-Pole Cat. No.	4-Pole Cat. No.
	Replacement End Cap Kits • Provide direct connections to device terminals for ring type or bolt-on terminals without using terminal lugs (see Table 240) • Provide connections for all terminal accessories. • Includes supplies for 3 or 4 device terminals: end caps with captive nut, terminal bolts, and washers. • Standards Compliance: UL 489, CSA C22.2 No. 5 • End Caps are supplied as standard for G, H, I, J, K, M, N, and NS frames • Provide connections for ring type or bolt-on terminals • Pkg qty. 3 (3-pole devices) or 4 (4-pole devices)	G	140G-G-ECM	140G-G-ECM4
		G (MCP)	140MG-G-ECM	—
		H	140G-H-ECM	140G-H-ECM4
		I	140G-I-ECM	140G-I-ECM4
		J	140G-J-ECM	140G-J-ECM4
		K	140G-K-ECM	140G-K-ECM4
		M	140G-M-ECM	140G-M-ECM4
		N	140G-N-ECM	140G-N-ECM4

Table 167 - Replacement Front and Side Covers

	Description	Frame Size	3-Pole Cat. No.	4-Pole Cat. No.
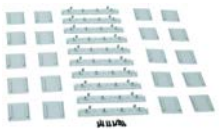	Circuit Breaker Front and Side Covers • Supplied as standard with each device • Front cover (carter) provides IP40 finger protection on the line and load side terminal • Side covers guide accessory signal wires along side of device toward panel • Pkg. qty. 10	G	140G-G-SC3	140G-G-SC4
		H	140G-H-SC3	140G-H-SC4
		I	140G-I-SC3	140G-I-SC4
		J	140G-J-SC3	140G-J-SC4

Table 168 - Replacement Backplate (BP)

	Description	Frame Size	3-Pole Cat. No.	4-Pole Cat. No.
	Insulators • Supplied as standard for G, H, I, J, K, and M frames • Insulates back of device and terminals against shorts to mounting panel • Required for all applications with a $U_e > 440V$ • Pkg Qty 10. • Replaced by insulation barrier in some operator kits	G	140G-G-BP3	140G-G-BP4
		H	140G-H-BP3	140G-H-BP4
		I	140G-I-BP3	140G-I-BP4
		J	140G-J-BP3	140G-J-BP4
		K	140G-K-BP3	140G-K-BP4
		M	140G-M-BP3	140G-M-BP4

Table 169 - Replacement Mounting Hardware (MH)

	Description	Frame Size	For Use With	Pkg. Qty.	Cat. No.
	Replacement Mounting Hardware • Metric threads for mounting device to panel • Supplied as standard with each breaker	G, I	3-pole devices	2	140G-G-MH3
			4-pole devices	3	140G-G-MH4
		H, J	3- and 4-pole devices	4	140G-H-MH4
		K	3- and 4-pole devices	4	140G-K-MH4
		M	3- and 4-pole devices	4	140G-M-MH4
		N, NS	3- and 4-pole devices	4	140G-N-MH4

Table 170 - Replacement Trip Units for N/NS/R Frames

	Description	Frame Size	Rated Current [A]	Trip Unit Type	Cat. No.
	Replacement Trip Unit • Supplied as standard all N/NS/R devices • Compatible with 3- and 4-pole devices	N, NS	1200	H - DIP LSI	140G-NTH-E12
				I - DIP LSI	140G-NTI-E12
				K - LCD LSIG-MM	140G-NTK-E12
		R	3000	K - LCD LSIG-MM	140G-RTK-E30

Table 171 - Replacement Internal Terminal Block for Trip Units for N/NS Frames

	Description	Frame Size	Cat. No.
	Replacement Internal Terminal Block • Supplied as standard all N/NS devices	N	140G-N-CBP
		NS	140G-NS-CBP

Table 172 - Replacement Rating Plugs (RP)

	Description	Frame Size	Rated Current I_n [A]	Cat. No.
	• Supplied as standard on all N/NS/R frame devices matching trip unit's maximum rated current • Plugs above frame rating are not compatible • See Table 133 for additional rating plugs at lower values	N, NS	1200	140G-NRP-E12
		R	2000	140G-RRP-E20
			2500	140G-RRP-E25
			3000	140G-RRP-E30

Table 173 - Replacement Terminal Strip Connectors

	Description	Frame Size	Cat. No.
	Terminal Strip Connector • Supplied as standard with each N/NS frame accessory with wire terminations • 3-pin quick connector for customer termination at terminal strip. Press fit into terminal strip slots. • Installs to terminal strip on all N and NS devices • Allows control wiring (solid or stranded), 22...14 AWG – Strip length 8 mm (0.31 in.)	N NS	140G-N-CIC

Table 174 - Replacement Door Interlock (SINT)(1)

	Description	Frame Size	Cat. No.
	Direct Mechanical Lock to Door • Trips breaker when enclosure door is opened unless deliberately defeated using defeater feature • Mechanically links trip bar in breaker to the enclosure door's position; when door is opened, breaker is tripped • Installs on the right side of NS or R breakers – Not compatible with breakers that have a toggle mechanism • Includes defeater mechanism for deliberate operation by qualified personnel while breaker is ON	NS	140G-N-SINT
		R	140G-R-SINT

(1) Supplied as standard on all R frame MCCBs, unless catalog code contains "-W1" (without door interlock).

Table 175 - Replacement Variable-Depth Rotary Operator Kit (RVM/NVM) Components[1]

	Description		Frame Size	Cat. No.
	Operating Handle • P-style handle for G, H, I, and J frames • Medium handles for K, M, and N frames • Rated 3/3R/4/4X/12 • Accepts 3 padlocks	Black/grey handle	G, H, I, J	140U-PB
		Red/yellow handle		140U-PY
		Black/grey handle	K, M, N	140U-HM4
		Red/yellow handle		140U-HM4E
	Extension Shaft	305 mm (12 in.)	G, H, I, J	194R-S1
		533 mm (21 in.)		194R-S2
		305 mm (12 in.)	K, M, N	194R-R7
		559 mm (22 in.)		194R-R8
	NFPA 79 internal operating handle with shaft • Internal handle permits operation of the molded case circuit breaker when the door is open in compliance with NFPA 79.	305 mm (12 in.)	G, H, I, J	140G-N1
		533 mm (21 in.)		140G-N2
		305 mm (12 in.)	K, M, N	140G-N7
		559 mm (22 in.)		140G-N8
	Rotary Variable Depth Operating Mechanism • Direct molded case circuit breaker mount • G, H, I, and J frame use 194R-S1 or 194R-S2 shafts (140G-N1 or 140G-N2 NFPA) • K, M, and N frames use 194R-R7 or 194R-R8 shafts (140G-R7 or 140G-R8 NFPA) • Shaft is secured with set screw or cotter pin		G, I	140G-G-RMX
			H, J	140G-H-RMX
			K	140G-K-RMX
			M	140G-M-RMX
			N	140G-N-RMX
	Support Bracket • Supplied as standard with NFPA variable depth operator kits		G, H, I, J	140G-G-OSB
			K	140G-K-OSB
			M	140G-M-OSB
			N	140G-N-OSB

(1) Supplied as standard on all variable-depth operator kits.

Table 176 - Replacement Parts for Flex Cable Operators and Bul. 1494V Variable-Depth Flange Operators

	Description	Frame Size	Cat. No.
	Non-metallic Flange Handle • includes mounting hardware	G, H, I, K, M	140G-P1
	Stainless Flange Handle • Chrome-plated steel • includes mounting hardware		140G-S1
	Painted Metal Flange Handle • includes mounting hardware		140G-M1
	Long non-metallic Flange Handle • includes mounting hardware	N	140G-P2
	Flange Handle Mounting Hardware for Cat. No. 140G-_-FCX_ • Plastic bail • Handle mounting nuts • Door interlock and fasteners • Hitch pin and washer • Seal	G, H, I, K	140G-FH1
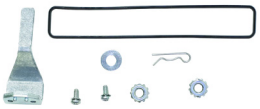	Flange Handle Mounting Hardware for Cat. No. 140G-_-FCXB_ • Metal bail • Handle mounting nuts • Door interlock and fasteners • Hitch pin and washer • Seal	G, H, I, J, K	140G-FH1B

Table 176 - Replacement Parts for Flex Cable Operators and Bul. 1494V Variable-Depth Flange Operators (Continued)

	Description	Frame Size	Cat. No.
	Actuator mounting hardware • Cotter pin • Fasteners	G, I	140G-BH1
		H, J	140G-BH2
		K	140G-BH3
	Metal Bail Toggle Plate and Mounting Hardware • Bail Plate • Spring • Door Hook • Hitch Pin • Washer and Fasteners	G, H, I, J	140G-BH1B
		K	140G-BH2B
		M, N	140G-BH3B
	Defeater Bracket Extender	G, H, I, J, K, M, N	1494V-H12
	Long Door Catch • For doors with depth > 25.4 mm (1 in)	G, H, I, J, K, M, N, NS	140G-HK1B

Flange Cable Operators

Table 177 - Flange Cable Operators, G-, H-, and I-Frame Devices with Plastic Bail Mechanisms

	Description	Frame Size	Handle Type	Cable Length	Cat. No.
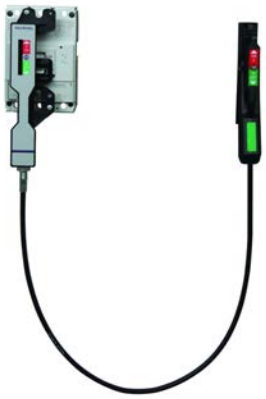	Flange Cable Operator • For use with NEMA-style flange enclosures. • Includes handle, MCCB operator, cable, and necessary hardware. • Pre-assembled for ease of installation. • Replacement Hardware is listed on page 98	G	Non-metallic Handle Type 1/3/12/4/4X	0.91 m (3 ft.)	140G-G-FCX03
				1.3 m (4 ft.)	140G-G-FCX04
				1.9 m (6 ft.)	140G-G-FCX06
				3.0 m (10 ft.)	140G-G-FCX10
			Stainless Handle[1] Type 4/4X	0.91 m (3 ft.)	140G-G-FCS03
				1.3 m (4 ft.)	140G-G-FCS04
				1.9 m (6 ft.)	140G-G-FCS06
				3.0 m (10 ft.)	140G-G-FCS10
			Painted Metal Handle Type 1/12	0.91 m (3 ft.)	140G-G-FMX03
				1.3 m (4 ft.)	140G-G-FMX04
				1.9 m (6 ft.)	140G-G-FMX06
				3.0 m (10 ft.)	140G-G-FMX10
		H	Non-metallic Handle Type 1/3/12/4/4X	0.91 m (3 ft.)	140G-H-FCX03
				1.3 m (4 ft.)	140G-H-FCX04
				1.9 m (6 ft.)	140G-H-FCX06
				3.0 m (10 ft.)	140G-H-FCX10
			Stainless Handle[1] Type 4/4X	0.91 m (3 ft.)	140G-H-FCS03
				1.3 m (4 ft.)	140G-H-FCS04
				1.9 m (6 ft.)	140G-H-FCS06
				3.0 m (10 ft.)	140G-H-FCS10
			Painted Metal Handle Type 1/12	0.91 m (3 ft.)	140G-H-FMX03
				1.3 m (4 ft.)	140G-H-FMX04
				1.9 m (6 ft.)	140G-H-FMX06
				3.0 m (10 ft.)	140G-H-FMX10

Table 177 - Flange Cable Operators, G-, H-, and I-Frame Devices with Plastic Bail Mechanisms (Continued)

	Description	Frame Size	Handle Type	Cable Length	Cat. No.
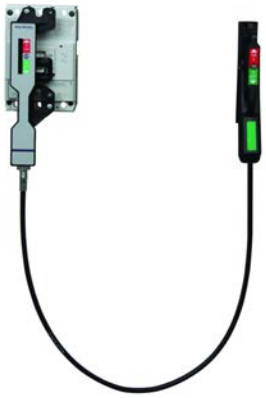	Flange Cable Operator • For use with NEMA-style flange enclosures. • Includes handle, MCCB operator, cable, and necessary hardware. • Pre-assembled for ease of installation. • Replacement Hardware is listed on page 98	I	Non-metallic Handle Type 1/3/12/4/4X	0.91 m (3 ft.)	140G-I-FCX03
				1.3 m (4 ft.)	140G-I-FCX04
				1.9 m (6 ft.)	140G-I-FCX06
				3.0 m (10 ft.)	140G-I-FCX10
			Stainless Handle(1) Type 4/4X	0.91 m (3 ft.)	140G-I-FCS03
				1.3 m (4 ft.)	140G-I-FCS04
				1.9 m (6 ft.)	140G-I-FCS06
				3.0 m (10 ft.)	140G-I-FCS10
			Painted Metal Handle Type 1/12	0.91 m (3 ft.)	140G-I-FMX03
				1.3 m (4 ft.)	140G-I-FMX04
				1.9 m (6 ft.)	140G-I-FMX06
				3.0 m (10 ft.)	140G-I-FMX10

(1) Stainless handles have a chrome-plated steel handle base.

Table 178 - Flange Cable Operators, J- and K-Frame Devices with Plastic Bail Mechanisms

	Description	Frame Size	Handle Type	Cable Length	Cat. No.
	• For use with NEMA-style flange enclosures. • Includes handle, MCCB operator, cable, and necessary hardware. • Pre-assembled for ease of installation. • Replacement hardware is listed on page 98	J	Non-metallic Handle Type 1/3/12/4/4X	0.91 m (3 ft.)	140G-J-FCX03
				1.3 m (4 ft.)	140G-J-FCX04
				1.9 m (6 ft.)	140G-J-FCX06
				3.0 m (10 ft.)	140G-J-FCX10
			Stainless Handle(1) Type 4/4X	0.91 m (3 ft.)	140G-J-FCS03
				1.3 m (4 ft.)	140G-J-FCS04
				1.9 m (6 ft.)	140G-J-FCS06
				3.0 m (10 ft.)	140G-J-FCS10
			Painted Metal Handle Type 1/12	0.91 m (3 ft.)	140G-J-FMX03
				1.3 m (4 ft.)	140G-J-FMX04
				1.9 m (6 ft.)	140G-J-FMX06
				3.0 m (10 ft.)	140G-J-FMX10
		K	Non-metallic Handle Type 1/3/12/4/4X	0.91 m (3 ft.)	140G-K-FCX03
				1.3 m (4 ft.)	140G-K-FCX04
				1.9 m (6 ft.)	140G-K-FCX06
				3.0 m (10 ft.)	140G-K-FCX10
			Stainless Handle(1) Type 4/4X	0.91 m (3 ft.)	140G-K-FCS03
				1.3 m (4 ft.)	140G-K-FCS04
				1.9 m (6 ft.)	140G-K-FCS06
				3.0 m (10 ft.)	140G-K-FCS10
			Painted Metal Handle Type 1/12	0.91 m (3 ft.)	140G-K-FMX03
				1.3 m (4 ft.)	140G-K-FMX04
				1.9 m (6 ft.)	140G-K-FMX06
				3.0 m (10 ft.)	140G-K-FMX10

(1) Stainless handles have a chrome-plated steel handle base.

Bulletin 140G Molded Case Circuit Breakers

Table 179 - Performance Characteristics, G-, H-, and I-Frame MCCBs

Attribute			G-Frame			H-Frame					I-Frame	
Max. Rated Current		[A]	125 / 160 (IEC version with a 160 A I_{cu} rating)			125 / 160 (IEC version with a 160 A I_{cu} rating)					225	
Rated insulation voltage, U_i, IEC		[V]	800			1000					800	
Rated impulse withstand voltage, U_{imp}		[kV]	8			8					8	
NEMA, UL, CSA Ratings												
Interrupting Rating Code[1]			**G2**	**G3**	**G6**	**H2**	**H3**	**H6**	**H0**	**H15**	**I2**	**I3**
240V AC, 50/60 Hz		[kA]	50	65	100	65	100	150	200	200	50	65
480V AC, 50/60 Hz		[kA]	25	35	65	25	35	65	100	150	25	35
600Y/347V AC, 50/60 Hz		[kA]	10	14	25	–	–	–	–	–	10	10
600V AC, 50/60 Hz		[kA]	–	–	–	14	18	25	35	42	25	35
Rated ultimate short-circuit breaking capacity, I_{cu}	220...230V AC, 50/60 Hz	[kA]	65	85	100	65	85	100	150	200	50	85
	380V AC, 50/60 Hz	[kA]	36	50	70	36	50	70	120	150	30	50
	400...415V AC, 50/60 Hz	[kA]	36	50	70	36	50	70	120	150	36	50
	440V AC, 50/60 Hz	[kA]	36	50	65	36	50	65	100	150	25	40
	500V AC, 50/60 Hz	[kA]	30	36	50	30	35	50	60	70	20	30
	525V AC, 50/60 Hz	[kA]	22	35	35	20	25	30	36	50	13	20
	690V AC, 50/60 Hz	[kA]	6	8	10	10	12	15	18	20	5	6
	250V DC- 2 poles in series, thermal-mag trip units only	[kA]	36	50	70	36	50	70	85	100	36	50
	500V DC- 3 poles in series, thermal-mag trip units only	[kA]	36 (4 p in series)	50 (4 p in series	70 (4 p in series)	36	50	70	85	100	36	50
Rated service short-circuit breaking capacity, I_{cs}	220...230V AC, 50/60 Hz	% I_{cu}	75% (50)	75%	75%	100%	100%	100%	100%	100%	75%	50%
	380V AC, 50/60 Hz	% I_{cu}	100%	100%	75%	100%	100%	100%	100%	100%	75%	50% (27)
	400...415V AC, 50/60 Hz	% I_{cu}	100%	100%	50%[2]	100%	100%	100%	100%	100%	75%	50% (27)
	440V AC, 50/60 Hz	% I_{cu}	50%	50%	50%	100%	100%	100%	100%	100%	75%	50%
	500V AC, 50/60 Hz	% I_{cu}	50%	50%	50%	100%	100%	100%	100%	100%	75%	50%
	525V AC, 50/60 Hz	% I_{cu}	50%	50%	50%	100%	100%	100%	100%	100%	75%	50%
	690V AC, 50/60 Hz	% I_{cu}	75%	50%	50%[2]	100%	100%	100%	100%	75%	50%	50%
	250V DC- 2 poles in series, thermal-mag trip units only	% I_{cu}	100%	100%	75%[2]	100%	100%	100%	100%	100%	100%	75%
	500V DC- 3 poles in series, thermal-mag trip units only	% I_{cu}	100%	100%	75%[2]	100%	100%	100%	100%	100%	100%	75%
Rated Short-time Withstand Rating[3] (I_{cw}) per IEC 60947-4-2, Utilization Category: Class B			– (Class A)			– (Class A)					– (Class A)	

(1) Explanation of Interrupting Code. Example: code G2, G=G-Frame; 2= 25 kA@480V. See product selection for complete ratings
(2) I_{cs} Ratings for 15, 16, and 20 A G-Frame Devices: See Table 180
(3) Short-time withstand ratings are only valid for frames when they are assembled to a trip unit with Short protection (S) and at a frame size used to ride through short-time short circuit events in an application with selectivity. See publication 140G-TD050 for coordination data.

Table 180 - Rated Service Short-circuit Breaking Capacity (I_{cs}) Ratings for 15, 16, and 20 A G-Frame Devices

	400...415V AC	690V AC	250V DC	500V DC
I_{cs}	100%	75%	100%	100%

Table 181 - Mechanical and Environmental Ratings, G-, H-, and I-Frame MCCBs

Attribute			G-Frame	H-Frame	I-Frame
Mechanical Life	[No. of Operations]		25000	25000	25000
	[Operations/hour]		240	240	240
Electrical Life @ 415V (AC)	[No. of Operations]		8000	8000	8000
	[Operations/hour]		120	120	120
Wire Temperature Rating (1)			Cu; 75 °C (167 °F)	Cu; 75 °C (167 °F)	Cu; 75 °C (167 °F)
Ambient Temperature without derating			40 °C (104 °F)	40 °C (104 °F)	40 °C (104 °F)
Storage Temperature			-40...+80 °C (-40...176 °F)	-40...+80 °C (-40...176 °F)	-40...+80 °C (-40...176 °F)
Dimensions Width/Depth/Height	3-pole	[mm (in.)]	76.2 x 70 x 130 (3 x 2.75 x 5.12)	90 x 82.5 x 130 (3.5 x 3.2 x 5.12)	105 x 70 x 150 (4 x 2.75 x 5.9)
	4-pole	[mm (in.)]	101.6 x 70 x 130 (4 x 2.75 x 5.12)	120 x 82.5 x 130 (4.7 x 3.2 x 5.12)	140 x 70 x 150 (5.5 x 2.75 x 5.9)
Weight	3-pole	[lb. (kg)]	2.42 (1.1)	2.65 (1.2)	3.75 (1.7)
	4-pole	[lb. (kg)]	3.08 (1.4)	3.53 (1.6)	5.73 (2.1)

(1) Wire temperature rating is determined by testing the circuit breaker under full load current with the conductors sized for 75 °C (167 °F).

Table 182 - Performance Characteristics, J-, K-, and M-Frame MCCBs

Attribute			J-Frame				K-Frame				M-Frame		
Max. Rated Current		[A]	250				400				800		
Rated insulation voltage, U_i, IEC		[V]	1000				1000				1000		
Rated impulse withstand voltage, U_{imp}		[kV]	8				8				8		
NEMA, UL, CSA Ratings													
Interrupting Rating Code(1)			**J2**	**J3**	**J6**	**J0**	**K3**	**K6**	**K0**	**K15**	**M5**	**M6**	**M0**
240V AC, 50/60 Hz		[kA]	65	100	150	200	100	150	200	200	100	200	200
480V AC, 50/60 Hz		[kA]	25	35	65	100	35	65	100	150	50	65	100
600V AC, 50/60 Hz		[kA]	14	18	25	35	25	35	65	100	25	35	42
500V DC- 2 poles in series (2)		[kA]	–	–	–	–	35	50	65	100	–	–	–
600V DC - 3 poles in series(2)		[kA]	–	–	–	–	25	35	50	65	20	35	50
IEC 60947-2 Ratings													
Rated ultimate short-circuit breaking capacity, I_{cu}	220...230V AC, 50/60 Hz	[kA]	65	85	100	150	85	100	200	200	85	100	200
	380V AC, 50/60 Hz (AC)	[kA]	36	50	70	120	50	70	120	200	50	70	100
	400...415V AC, 50/60 Hz	[kA]	36	50	70	120	50	70	120	200	50	70	100
	440V AC, 50/60 Hz	[kA]	36	50	65	100	40	65	100	180	45	50	80
	500V AC, 50/60 Hz	[kA]	30	36	50	60	30	50	85	150	35	50	65
	525V AC, 50/60 Hz	[kA]	20	25	45	50	25	40	70	100	25	35	42
	690V AC, 50/60 Hz	[kA]	10	12	15	20	25	40	70	100	22	25	30
	250V DC- 2 poles in series(2)	[kA]	36	50	70	85	50	70	100	150	50	70	100
	500V DC- 2 poles in series (2)	[kA]	36	50	70	85	36	50	70	100	35	50	65
	500V DC- 3 poles in series(2)	[kA]	36	50	70	85	–	–	–	–	–	–	–
	750V DC- 3 poles in series(2)	[kA]	–	–	–	–	25	36	50	70	20	36	50
Rated service short-circuit breaking capacity, I_{cs}	220...230V AC, 50/60 Hz	% I_{cu}	100%	100%	100%	100%	100%	100%	100%	100%	100%	100%	100%
	380V AC, 50/60 Hz	% I_{cu}	100%	100%	100%	100%	100%	100%	100%	100%	100%	100%	100%
	400...415V AC, 50/60 Hz	% I_{cu}	100%	100%	100%	100%	100%	100%	100%	100%	100%	100%	100%
	440V AC, 50/60 Hz	% I_{cu}	100%	100%	100%	100%	100%	100%	100%	100%	100%	100%	100%
	500V AC, 50/60 Hz	% I_{cu}	100%	100%	100%	100%	100%	100%	100%	100%	100%	100%	100%
	525V AC, 50/60 Hz	% I_{cu}	100%	100%	100%	100%	100%	100%	100%	75% (80 kA)	75% (18 kA)	50% (19 kA)	50% (22.5 kA)
	690V AC, 50/60 Hz	% I_{cu}	100%	100%	100%	100%	100%	100%	100%	100%	75%	75%	75%
	250V DC- 2 poles in series(2)	% I_{cu}	100%	100%	100%	100%	100%	100%	100%	100%	75%	75%	75%
	500V DC- 2 poles in series(2)	% I_{cu}	100%	100%	100%	100%	100%	100%	100%	100%	75%	75%	75%
	500V DC- 3 poles in series(2)	% I_{cu}	100%	100%	100%	100%	–	–	–	–	–	–	–
	750V DC- 3 poles in series(2)	% I_{cu}	–	–	–	–	100%	100%	100%	100%	75%	75%	75%
Rated Short-time Withstand Rating(3) (I_{cw}) per IEC 60947-4-2, Utilization Category: Class B			– (Class A)				5 kA @ 1 s				10 kA @ 1 s		

(1) Explanation of Interrupting Code. Example: code G2, G=G-Frame; 2= 25 kA@480V. See product selection for complete ratings
(2) DC rating is applicable for thermal-magnetic trip units only
(3) Short-time withstand ratings are only valid for frames when they are assembled to a trip unit with Short protection (S) and at a frame size used to ride through short-time short circuit events in an application with selectivity. See publication 140G-TD050 for coordination data.

Table 183 - Mechanical and Environmental Ratings, J-, K-, and M-Frame MCCBs

Attribute			J-Frame	K-Frame	M-Frame
Mechanical Life	[No. of Operations]		25000	20000	20000
	[Operations/hour]		240	120	120
Electrical Life @ 415V (AC)	[No. of Operations]		8000	7000 (400 A)/5000 (600 A)	7000 (600...630 A) 5000 (800 A)
	[Operations/hour]		120	60	60
Wire Temperature Rating (1)			Al or Cu; 75 °C (167 °F)	Al or Cu; 75 °C (167 °F)	Al or Cu; 75 °C (167 °F)
Ambient Temperature without derating			40 °C (104 °F)	40 °C (104 °F)	40 °C (104 °F)
Storage Temperature			-40...+80 °C (-40...176 °F)	-40...+80 °C (-40...176 °F)	-40...+80 °C (-40...176 °F)
Dimensions Width/Depth/Height	3-pole	[mm (in.)]	105 x 82.5 x 160 (4 x 3.2 x 6.3)	140 x 108.5 x 205 (5.5 x 4.3 x 8)	210 x 103.5 x 268 (8.3 x 4 x 10.5)
	4-pole	[mm (in.)]	140 x 82.5 x 160 (5.5 x 3.2 x 6.3)	185 x 103.5 x 205 (7.3 x 4 x 8)	280 x 103.5 x 268 (11 x 4 x 10.5)
Weight	3-pole	[lb. (kg)]	5.51 (2.5)	7.17 (3.25)	26.68 (12.1)
	4-pole	[lb. (kg)]	7.72 (3.5)	9.15 (4.15)	33.29 (15.1)

(1) Wire temperature rating is determined by testing the circuit breaker under full load current with the conductors sized for 75 °C (167 °F).

Table 184 - Performance Characteristics, N-, NS-, and R-Frame MCCBs

Attribute			N, NS-Frame			R-Frame
Max. Rated Current		[A]	1200			2000/2500/3000
Rated insulation voltage, U_i, IEC		[V]	1000			1000
Rated impulse withstand voltage, U_{imp}		[kV]	8			12
NEMA, UL, CSA Ratings						
Interrupting Rating Code(1)			**N5**	**N6**	**N0**	**R12**
240V AC, 50/60 Hz		[kA]	65	100	150	125
480V AC, 50/60 Hz		[kA]	50	65	100	125
600V AC, 50/60 Hz		[kA]	25	50	65	100
IEC 60947-2 Ratings						
Rated ultimate short-circuit breaking capacity, I_{cu}	220...230V AC, 50/60 Hz	[kA]	85	100	200	130
	380V AC, 50/60 Hz	[kA]	50	70	120	80
	400...415V AC, 50/60 Hz	[kA]	50	70	120	80
	440V AC, 50/60 Hz	[kA]	50	65	100	80
	500V AC, 50/60 Hz	[kA]	40	50	85	40
	525V AC, 50/60 Hz	[kA]	30	50	65	–
	690V AC, 50/60 Hz	[kA]	30	42	50	40
Rated service short-circuit breaking capacity, I_{cs}	220...230V AC, 50/60 Hz	% I_{cu}	100%	100%	100%	100%
	380V AC, 50/60 Hz (AC)	% I_{cu}	100%	100%	100%	–
	400...415V AC, 50/60 Hz	% I_{cu}	100%	100%	100%	100%
	440V AC, 50/60 Hz	% I_{cu}	100%	100%	100%	100%
	500V AC, 50/60 Hz	% I_{cu}	100%	100%	75%	100%
	525V AC, 50/60 Hz	% I_{cu}	75% (30 kA)	50% (31.5 kA)	50% (37.5 kA)	–
	690V AC, 50/60 Hz	% I_{cu}	100%	75%	75%	100%
Rated Short-time Withstand Rating(2) (I_{cw}) per IEC 60947-4-2, Utilization Category: Class B			15 kA @ 1 s			40 kA @ 1 s

(1) Explanation of Interrupting Code. Example: code G2, G=G-Frame; 2= 25 kA@480V. See product selection for complete ratings.
(2) Short-time withstand ratings are only valid for frames when they are assembled to a trip unit with Short protection (S) and at a frame size used to ride through short-time short circuit events in an application with selectivity. See publication 140G-TD050 for coordination data.

Table 185 - Mechanical and Environmental Ratings, N-, NS-, and R-Frame MCCBs

Attribute			N-Frame	NS-Frame	R-Frame
Mechanical Life	[No. of Operations]		10,000	10,000	
	[Operations/hour]		60	60	
Electrical Life @ 415V (AC)	[No. of Operations]		2000	2000	
	[Operations/hour]		60	60	
Wire Temperature Rating (1)			Al or Cu; 75 °C (167 °F)	Al or Cu; 75 °C (167 °F)	Al or Cu; 75 °C (167 °F)
Ambient Temperature without derating			40 °C (104 °F)	40 °C (104 °F)	40 °C (104 °F)
Storage Temperature			-40...+80 °C (-40...176 °F)	-40...+80 °C (-40...176 °F)	-40...+80 °C (-40...176 °F)
Dimensions Width/Depth/Height	3-pole	[mm (in.)]	210 x 154 x 268 (8.3 x 6 x 10.5	210 x 178 x 268 (8.3 x 7 x 10.5)	427 x 282 x 382 (16.8 x 11.1 x 15)
	4-pole	[mm (in.)]	280 x 154 x 268 (11 x 6 x 10.5)	280 x 178 x 268 (11 x 7 x 10.5)	553 x 282 x 382 (21.7 x 11.1 x 15)
Weight	3-pole	[lb. (kg)]	21.39 (9.7)	24.25 (11)	175 (79)
	4-pole	[lb. (kg)]	27.56 (12.5)	30.86 (14)	—

(1) Wire temperature rating is determined by testing the circuit breaker under full load current with the conductors sized for 75 °C (167 °F).

Bulletin 140G Molded Case Switches

Table 186 - Performance Characteristics, G-, H-, and I-Frame MCCBs

Attribute			Frame Size							
			G	H	I	J	K	M	N	R
Max. Rated Current		[A]	125/160 (IEC version with a 160 A I_{cu} rating)		225	250	400	800	1200	2000/2500/3000
Rated insulation voltage, U_i, IEC		[V]	800	1000	800	1000	1000	1000	1000	1000
Rated impulse withstand voltage, U_{imp}		[kV]	8	8	8	8	8	8	8	12
NEMA, UL, CSA Ratings										
Interrupting Rating Code(1)			**G6**	**H6**	**I3**	**J0**	**K15**	**M6**	**N6**	**R12**
240V AC, 50/60 Hz		[kA]	100	150	65	200	200	200	100	125
480V AC, 50/60 Hz		[kA]	65	65	35	100	150	65	65	125
600Y/347V AC, 50/60 Hz		[kA]	25	–	10	–	–	–	–	–
600V AC, 50/60 Hz		[kA]	–	25	35	35	100	35	50	100
500V DC- 2 poles in series (2)		[kA]	–	–	–	–	100	–	–	–
600V DC - 3 poles in series(2)		[kA]	–	–	–	–	65	35	–	–
IEC 60947-2 Ratings										
Rated ultimate short-circuit breaking capacity, I_{cu}	220...230V AC, 50/60 Hz	[kA]	100	100	85	150	200	100	100	130
	380V AC, 50/60 Hz	[kA]	70	70	50	120	200	70	70	80
	400...415V AC, 50/60 Hz	[kA]	70	70	50	120	200	70	70	80
	440V AC, 50/60 Hz	[kA]	65	65	40	100	180	50	65	80
	500V AC, 50/60 Hz	[kA]	50	50	30	60	150	50	50	40
	525V AC, 50/60 Hz	[kA]	35	30	20	50	100	35	50	–
	690V AC, 50/60 Hz	[kA]	10	15	6	20	100	25	42	40
	250V DC- 2 poles in series(2)	[kA]	70	70	50	85	150	70	–	–
	500V DC- 2 poles in series (2)	[kA]	–	–	–	85	100	50	–	–
	500V DC- 3 poles in series(2)	[kA]	70 (4 p in series)	70	50	85	–	–	–	–
	750V DC- 3 poles in series(2)	[kA]	–	–	–	–	70	36	–	–
Rated service short-circuit breaking capacity, I_{cs}	220...230V AC, 50/60 Hz	% I_{cu}	75%	100%	50%	100%	100%	100%	100%	100%
	380V AC, 50/60 Hz	% I_{cu}	75%	100%	50% (27)	100%	100%	100%	100%	–
	400...415V AC, 50/60 Hz	% I_{cu}	50%(3)	100%	50% (27)	100%	100%	100%	100%	100%
	440V AC, 50/60 Hz	% I_{cu}	50%	100%	50%	100%	100%	100%	100%	100%
	500V AC, 50/60 Hz	% I_{cu}	50%	100%	50%	100%	100%	100%	100%	100%
	525V AC, 50/60 Hz	% I_{cu}	50%	100%	50%	100%	75% (80 kA)	50% (19 kA)	50% (31.5 kA)	–
	690V AC, 50/60 Hz	% I_{cu}	50%(2)	100%	50%	100%	100%	75%	75%	100%
	250V DC- 2 poles in series(2)	% I_{cu}	75%(2)	100%	75%	100%	100%	75%	–	–
	500V DC- 2 poles in series (2)	% I_{cu}	–	–	–	100%	100%	75%	–	–
	500V DC- 3 poles in series(2)	% I_{cu}	75%(2)	100%	75%	100%	–	–	–	–
	750V DC- 3 poles in series(2)	% I_{cu}	–	–	–	–	100%	75%	–	–
Rated Short-time Withstand Rating(4) (I_{cw}) per IEC 60947-4-2, Utilization Category: Class B			– (Class A)	– (Class A)	– (Class A)	– (Class A)	5 kA @ 1 s	10 kA @ 1 s	15 kA @ 1 s	40 kA @ 1 s

(1) Explanation of Interrupting Code. Example: code G2, G=G-Frame; 2= 25 kA@480V. See product selection for complete ratings
(2) DC rating is applicable for thermal-magnetic trip units only
(3) I_{cs} Ratings for 15, 16, and 20 A G-Frame Devices: See Table 180
(4) Short-time withstand ratings are only valid for frames when they are assembled to a trip unit with Short protection (S) and at a frame size used to ride through short-time short circuit events in an application with selectivity. See publication 140G-TD050 for coordination data.

Table 187 - Rated Service Short-circuit Breaking Capacity (I_{cs}) Ratings for 15, 16, and 20 A G-Frame Devices

	400...415V AC	690V AC	250V DC	500V DC
I_{cs}	100%	75%	100%	100%

Table 188 - Mechanical and Environmental Ratings, G-, H-, and I-Frame MCCBs

Attribute			G-Frame	H-Frame	I-Frame
Mechanical Life	[No. of Operations]		25000	25000	25000
	[Operations/hour]		240	240	240
Electrical Life @ 415V (AC)	[No. of Operations]		8000	8000	8000
	[Operations/hour]		120	120	120
Wire Temperature Rating (1)			Cu; 75 °C (167 °F)	Cu; 75 °C (167 °F)	Cu; 75 °C (167 °F)
Ambient Temperature without derating			40 °C (104 °F)	40 °C (104 °F)	40 °C (104 °F)
Storage Temperature			-40...+80 °C (-40...176 °F)	-40...+80 °C (-40...176 °F)	-40...+80 °C (-40...176 °F)
Dimensions Width/Depth/Height	3-pole	[mm (in.)]	76.2 x 70 x 130 (3 x 2.75 x 5.12)	90 x 82.5 x 130 (3.5 x 3.2 x 5.12)	105 x 70 x 150 (4 x 2.75 x 5.9)
	4-pole	[mm (in.)]	101.6 x 70 x 130 (4 x 2.75 x 5.12)	120 x 82.5 x 130 (4.7 x 3.2 x 5.12)	140 x 70 x 150 (5.5 x 2.75 x 5.9)
Weight	3-pole	[lb. (kg)]	2.42 (1.1)	2.65 (1.2)	3.75 (1.7)
	4-pole	[lb. (kg)]	3.08 (1.4)	3.53 (1.6)	5.73 (2.1)

(1) Wire temperature rating is determined by testing the circuit breaker under full load current with the conductors sized for 75 °C (167 °F).

Table 189 - Mechanical and Environmental Ratings, J-, K-, and M-Frame MCCBs

Attribute			J-Frame	K-Frame	M-Frame
Mechanical Life	[No. of Operations]		25000	20000	20000
	[Operations/hour]		240	120	120
Electrical Life @ 415V (AC)	[No. of Operations]		8000	7000 (400 A)/5000 (600 A)	7000 (600...630 A) 5000 (800 A)
	[Operations/hour]		120	60	60
Wire Temperature Rating (1)			Al or Cu; 75 °C (167 °F)	Al or Cu; 75 °C (167 °F)	Al or Cu; 75 °C (167 °F)
Ambient Temperature without derating			40 °C (104 °F)	40 °C (104 °F)	40 °C (104 °F)
Storage Temperature			-40...+80 °C (-40...176 °F)	-40...+80 °C (-40...176 °F)	-40...+80 °C (-40...176 °F)
Dimensions Width/Depth/Height	3-pole	[mm (in.)]	105 x 82.5 x 160 (4 x 3.2 x 6.3)	140 x 108.5 x 205 (5.5 x 4.3 x 8)	210 x 103.5 x 268 (8.3 x 4 x 10.5)
	4-pole	[mm (in.)]	140 x 82.5 x 160 (5.5 x 3.2 x 6.3)	185 x 103.5 x 205 (7.3 x 4 x 8)	280 x 103.5 x 268 (11 x 4 x 10.5)
Weight	3-pole	[lb. (kg)]	5.51 (2.5)	7.17 (3.25)	26.68 (12.1)
	4-pole	[lb. (kg)]	7.72 (3.5)	9.15 (4.15)	33.29 (15.1)

(1) Wire temperature rating is determined by testing the circuit breaker under full load current with the conductors sized for 75 °C (167 °F).

Table 190 - Mechanical and Environmental Ratings, N-, NS-, and R-Frame MCCBs

Attribute			N-Frame	NS-Frame	R-Frame
Mechanical Life	[No. of Operations]		10,000	10,000	
	[Operations/hour]		60	60	
Electrical Life @ 415V (AC)	[No. of Operations]		2000	2000	
	[Operations/hour]		60	60	
Wire Temperature Rating (1)			Al or Cu; 75 °C (167 °F)	Al or Cu; 75 °C (167 °F)	Al or Cu; 75 °C (167 °F)
Ambient Temperature without derating			40 °C (104 °F)	40 °C (104 °F)	40 °C (104 °F)
Storage Temperature			-40...+80 °C (-40...176 °F)	-40...+80 °C (-40...176 °F)	-40...+80 °C (-40...176 °F)
Dimensions Width/Depth/Height	3-pole	[mm (in.)]	210 x 154 x 268 (8.3 x 6 x 10.5	210 x 178 x 268 (8.3 x 7 x 10.5)	427 x 282 x 382 (16.8 x 11.1 x 15)
	4-pole	[mm (in.)]	280 x 154 x 268 (11 x 6 x 10.5)	280 x 178 x 268 (11 x 7 x 10.5)	553 x 282 x 382 (21.7 x 11.1 x 15)
Weight	3-pole	[lb. (kg)]	21.39 (9.7)	24.25 (11)	175 (79)
	4-pole	[lb. (kg)]	27.56 (12.5)	30.86 (14)	—

(1) Wire temperature rating is determined by testing the circuit breaker under full load current with the conductors sized for 75 °C (167 °F).

Bulletin 140G Current-limiting Molded Case Circuit Breakers

Table 191 - Performance Characteristics

Attribute			HC-Frame		JC-Frame		KC-Frame	
Max. Rated Current		[A]	125/160 (IEC version with a 160 A I_{cu} rating)		250		400	
Rated insulation voltage, U_i, IEC		[V]	1000		1000		1000	
Rated impulse withstand voltage, U_{imp}		[kV]	8		8		8	
NEMA, UL, CSA Ratings								
Interrupting Rating Code(1)			**HC6**	**HC0**	**JC6**	**JC0**	**KC6**	**KC0**
240V AC, 50/60 Hz		[kA]	150	200	150	200	150	200
480V AC, 50/60 Hz		[kA]	65	100	65	100	65	100
600V AC, 50/60 Hz		[kA]	–	–	25	35	35	65
500V DC- 2 poles in series (2)		[kA]	25	35	–	–	50	65
600V DC - 3 poles in series(2)		[kA]	–	–	–	–	35	50
IEC 60947-2 Ratings								
Rated ultimate short-circuit breaking capacity, I_{cu}	220...230V AC, 50/60 Hz	[kA]	100	150	100	150	100	200
	380V AC, 50/60 Hz (AC)	[kA]	70	120	70	120	70	120
	400...415V AC, 50/60 Hz	[kA]	70	120	70	120	70	120
	440V AC, 50/60 Hz	[kA]	65	100	65	100	65	100
	500V AC, 50/60 Hz	[kA]	50	60	50	60	50	85
	525V AC, 50/60 Hz	[kA]	30	36	45	50	40	70
	690V AC, 50/60 Hz	[kA]	15	18	15	20	40	70
	250V DC- 2 poles in series(2)	[kA]	70	85	70	85	70	100
	500V DC- 2 poles in series (2)	[kA]	70	85	70	85	50	70
	500V DC- 3 poles in series(2)	[kA]	–	–	70	85	–	–
	750V DC- 3 poles in series(2)	[kA]	–	–	–	–	36	50
Rated service short-circuit breaking capacity, I_{cs}	220...230V AC, 50/60 Hz	% I_{cu}	100%	100%	100%	100%	100%	100%
	380V AC, 50/60 Hz	% I_{cu}	100%	100%	100%	100%	100%	100%
	400...415V AC, 50/60 Hz	% I_{cu}	100%	100%	100%	100%	100%	100%
	440V AC, 50/60 Hz	% I_{cu}	100%	100%	100%	100%	100%	100%
	500V AC, 50/60 Hz	% I_{cu}	100%	100%	100%	100%	100%	100%
	525V AC, 50/60 Hz	% I_{cu}	100%	100%	100%	100%	100%	100%
	690V AC, 50/60 Hz	% I_{cu}	100%	100%	100%	100%	100%	100%
	250V DC- 2 poles in series(2)	% I_{cu}	100%	100%	100%	100%	100%	100%
	500V DC- 2 poles in series(2)	% I_{cu}	100%	100%	100%	100%	100%	100%
	500V DC- 3 poles in series(2)	% I_{cu}	–	–	100%	100%	–	–
	750V DC- 3 poles in series(2)	% I_{cu}	–	–	–	–	100%	100%

(1) Explanation of Interrupting Code. Example: code HC6, HC = Current-limiting H-Frame; 6= 65 kA@480V. See product selection for complete ratings
(2) DC rating is applicable for thermal-magnetic trip units only

Table 192 - Mechanical and Environmental Ratings

Attribute			HC-Frame	JC-Frame	KC-Frame
Mechanical Life	[No. of Operations]		25,000	25,000	20,000
	[Operations/hour]		240	240	120
Electrical Life @ 415V (AC)	[No. of Operations]		8000	8000	7000 (400 A)/5000 (600 A)
	[Operations/hour]		120	120	60
Wire Temperature Rating (1)			Cu; 75 °C (167 °F)	Al or Cu; 75 °C (167 °F)	Al or Cu; 75 °C (167 °F)
Ambient Temperature without derating			40 °C (104 °F)	40 °C (104 °F)	40 °C (104 °F)
Storage Temperature			-40...+80 °C (-40...176 °F)	-40...+80 °C (-40...176 °F)	-40...+80 °C (-40...176 °F)
Dimensions (Width/Depth/Height)	3-pole	[mm (in.)]	90 x 82.5 x 130 (3.5 x 3.2 x 5)	105 x 82.5 x 160 (4.1 x 3.2 x 6.3)	140 x 108.5 x 205 (5.5 x 4.3 x 8)
Weight	3-pole	[lb. (kg)]	2.65 (1.2)	5.51 (2.5)	7.17 (3.25)

(1) Wire temperature rating is determined by testing the circuit breaker under full load current with the conductors sized for 75 °C (167 °F).

Let-through Current

See page 140 for let-through energy curves.

Table 193 - 140G-HC Frame Let-through Current

Frame Size	Rated Current I_n [A]	Rated voltage [V AC]	Threshold Current			Intermediate Point			Interrupting Rating		
			I_{rms} [kA]	I_p [kA]	I^2t [x10^3]	I_{rms} [kA]	I_p [kA]	I^2t [x10^3]	I_{rms} [kA]	I_p [kA]	I^2t [x10^3]
140G-HC6	up to 125 A	480	6	10	266	30	19	480	65	23.2	512
		600	6	10	301	14	14.1	472	25	18	655
140G-HC0	up to 125 A	480	6	10	266	50	21	486	100	31.1	704
		600	6	10	301	22	18	655	35	20	650

Table 194 - 140G-JC Frame Let-through Current

Frame Size	Rated Current I_n [A]	Rated voltage [V AC]	Threshold Current			Intermediate Point			Interrupting Rating		
			I_{rms} [kA]	I_p [kA]	I^2t [x10^3]	I_{rms} [kA]	I_p [kA]	I^2t [x10^3]	I_{rms} [kA]	I_p [kA]	I^2t [x10^3]
140G-JC6	up to 250 A	480	10	14.4	499	42	26.4	853	65	30	980
		600	10	13.7	582	18	91.1	791	25	22.3	990
140G-JC0	up to 250 A	480	10	14.4	499	50	26.4	853	100	44.5	1142
		600	10	13.7	582	30	24.2	1058	50	30.4	1162

Table 195 - 140G-KC Frame Let-through Current

Frame Size	Rated Current I_n [A]	Rated voltage [V AC]	Threshold Current			Intermediate Point			Interrupting Rating		
			I_{rms} [kA]	I_p [kA]	I^2t [x10^3]	I_{rms} [kA]	I_p [kA]	I^2t [x10^3]	I_{rms} [kA]	I_p [kA]	I^2t [x10^3]
140G-KC6	up to 400 A	480	10	20	1.4	65	43.9	2.8	100	47.3	3
		600	10	21	1.5	30	36	2.6	65	44	3
140G-KC0	up to 400 A	480	10	20	1.4	30	35	2.4	65	43.9	2.8
		600	10	21	1.5	22	31	2.2	35	38	2.8

Bulletin 140MG Motor Circuit Protectors

Table 196 - Motor Circuit Protector Performance Characteristics, G-, H-, I-, and J-Frame

Attribute			G-Frame	H-Frame	I-Frame	J-Frame
Frame Size		[A]	125	125	225	250
Poles			3	3	3	3
Instantaneous Trip Settings		[A]	3...125	3...125	100...150	150...250
Rated insulation voltage, U_i IEC		[V]	800	1000	800	1000
Rated impulse withstand voltage, U_{imp}		[kV]	8	8	8	8
NEMA, UL, CSA Ratings —UL 489 Instantaneous Trip Circuit Breaker (Magnetic Only) Max SCCR. Combination Controller Rating (1)						
480V AC		[kA]	65	65	35	65
600Y/347V AC		[kA]	25	—	10	—
600V AC		[kA]	—	25	—	25
IEC 60947-2 GB14048.2 Ratings						
Rated ultimate short-circuit breaking capacity, I_{cu} (2)	220-230V AC	[kA]	65(3)	65(3)	85	100
	380V AC	[kA]	36(3)	36(3)	50	70
	400-415V AC	[kA]	36(3)	36(3)	50	70
	440V AC	[kA]	36(3)	36 (3)	40	65
	500V AC	[kA]	30(3)	30 (3)	30	50
	525V AC	[kA]	22(3)	20 (3)	20	45
	690V AC	[kA]	6 (3)	10 (3)	6	15
	250V DC- 2 poles in series	[kA]	—	—	50	70
	500V DC- 3 poles in series	[kA]	—	—	50	70
Rated service short-circuit breaking capacity, I_{cs} (2)	220-230V AC	% I_{cu}	75%(3)	100% (3)	50%	100%
	380V AC	% I_{cu}	100% (3)	100%(3)	50% (27)	100%
	400-415V AC	% I_{cu}	100% (3)	100%(3)	50% (27)	100%
	440V AC	% I_{cu}	50%(3)	100% (3)	50% (27)	100%
	500V AC	% I_{cu}	50% (3)	100% (3)	50%	100%
	525V AC	% I_{cu}	50% (3)	100% (3)	50%	100%
	690V AC	% I_{cu}	75% (3)	100% (3)	50%	100%
	250V DC- 2 poles in series	% I_{cu}	—	—	75%	100%
	500V DC- 3 poles in series	% I_{cu}	—	—	75%	100%

(1) The short-circuit value is based on a combination of MCP, contactor and overload relay as a UL60497-4-1 Type D Combination Motor Controller. See our Global SCCR Tool, rok.auto/sccr.
(2) These ratings represent the standalone values for the MCP. For Type 2 coordination values (per IEC60947-4), see Table 201. See our Global SCCR Tool, rok.auto/sccr.
(3) See Table 197

Table 197 - I_{cu}/I_{cs} Ratings, 3...7 A, G- and H-Frame

	230V	415V	440V	500V-525V	690V	250V DC	500V DC(1)
I_{cu}	5	5	3	3	3	5	5

	230V	415V	440V	500V-525V	690V	250V DC	500V DC(1)
I_{cs} (% I_{cu})	100	100	100	100	100	100	100

(1) H-Frame only

Table 198 - Mechanical and Environmental Ratings, G-, H-, I-, and J-Frame

Attribute			G-Frame	H-Frame	I-Frame	J-Frame
Mechanical Life	[No. of Operations]		25000	25000	25000	25000
	[Operations/hour]		240	240	240	240
Electrical Life @ 415V (AC)	[No. of Operations]		8000	8000	8000	8000
	[Operations/hour]		120	120	120	120
Wire Temperature Rating(1)			Cu; 75 °C (167 °F)	Al or Cu; 75 °C (167 °F)	Al or Cu; 75 °C (167 °F)	Al or Cu; 75 °C (167 °F)
Ambient Temperature without derating			40 °C (104 °F)	40 °C (104 °F)	40 °C (104 °F)	40 °C (104 °F)
Operating Temperature			-25...+70 °C (-13...+158 °F)	-25...+70 °C (-13...+158 °F)	-25...+70 °C (-13...+158 °F)	-25...+70 °C (-13...+158 °F)
Storage Temperature			-40...+70 °C (-40...158 °F)	-40...+70 °C (-40...158 °F)	-40...+70 °C (-40...158 °F)	-40...+70 °C (-40...158 °F)
Dimensions [Width/Depth/Height]		[mm (in.)]	76.2 x 70 x 130 (3 x 2.76 x 5.12)	90 x 82.5 x 130 (3.54 x 3.25 x 5.12)	105 x 70 x 150 (4.13 x 2.76 x 5.9)	105 x 82.5 x 160 (4.13 x 3.25 x 6.3)
Weight (approx.)		[lb. (kg)]	2.4 (1.1)	2.6 (1.2)	3.7 (1.7)	5.5 (2.5)

(1) Wire temperature rating is determined by testing the circuit breaker under full-load current with the conductors sized for 40 °C (104 °F).

Table 199 - Motor Circuit Protector Performance Characteristics, K-, M-, and N-Frame

Attribute			K-Frame	M-Frame	N-Frame
Frame Size		[A]	400	800	1200
Poles			3	3	3
Instantaneous Trip Settings		[A]	300 and 400	600 and 800	1200(1)
Rated insulation voltage, U_i IEC		[V]	1000	1000	1000
Rated impulse withstand voltage, U_{imp}		[kV]	8	8	8
NEMA, UL, CSA Ratings —UL 489 Instantaneous Trip Circuit Breaker (Magnetic Only) Max SCCR. Combination Controller Rating (2)					
480V AC		[kA]	65	65	—
600Y/347V AC		[kA]	—	—	—
600V AC		[kA]	35	35	—
IEC 60947-2 GB14048.2 Ratings					
Rated ultimate short-circuit breaking capacity, I_{cu}	220-230V AC	[kA]	100	100	100
	380V AC	[kA]	70	70	70
	400-415V AC	[kA]	70	70	70
	440V AC	[kA]	65	50	65
	500V AC	[kA]	50	50	50
	525V AC	[kA]	40	25	42
	690V AC	[kA]	40	25	42
	250V DC- 2 poles in series	[kA]	—	—	—
	500V DC- 3 poles in series	[kA]	—	—	—
Rated service short-circuit breaking capacity, I_{cs}	220-230V AC	% I_{cu}	100%	100%	100%
	380V AC	% I_{cu}	100%	100%	100%
	400-415V AC	% I_{cu}	100%	100%	100%
	440V AC	% I_{cu}	100%	100%	100%
	500V AC	% I_{cu}	100%	100%	100%
	525V AC	% I_{cu}	100%	75%	75%
	690V AC	% I_{cu}	100%	75%	75%
	250V DC- 2 poles in series	% I_{cu}	—	—	—
	500V DC- 3 poles in series	% I_{cu}	—	—	—

(1) Adjustable between 1...10x motor FLA.
(2) The short-circuit value is based on a combined of MCP, motor contactor and overload relay as a UL60497-4-1 Type D Combination Motor Controller. See our Global Short-circuit Rating Tool, rok.auto/sccr

Table 200 - Mechanical and Environmental Ratings, K-, M-, and N-Frame

Attribute			K-Frame	M-Frame	N-Frame
Mechanical Life	[No. of Operations]		20000	20000	10000
	[Operations/hour]		120	120	60
Electrical Life @ 415V (AC)	[No. of Operations]		7000	5000	2000
	[Operations/hour]		60	60	60
Wire Temperature Rating(1)			Al or Cu; 75 °C (167 °F)	Al or Cu; 75 °C (167 °F)	Al or Cu; 75 °C (167 °F)
Ambient Temperature without derating			40 °C (104 °F)	40 °C (104 °F)	40 °C (104 °F)
Operating Temperature			-25...+70 °C (-13...+158 °F)	-25...+70 °C (-13...+158 °F)	-25...+70 °C (-13...+158 °F)
Storage Temperature			-40...+70 °C (-40...158 °F)	-40...+70 °C (-40...158 °F)	-40...+70 °C (-40...158 °F)
Dimensions [Width/Depth/Height]		[mm (in.)]	140 x 108.5 x 205 (5.51 x 4.27 x 8.07)	210 x 103.5 x 268 (8.27 x 4.07 x 10.55)	210 x 154 x 268 (8.27 x 6.06 x 10.55)
Weight (approx.)		[lb. (kg)]	7.2 (3.25)	21 (9.5)	21.4 (9.7)

(1) Wire temperature rating is determined by testing the circuit breaker under full-load current with the conductors sized for 40 °C (104 °F)

Type D Combination Ratings

The short-circuit value is based on a combination of MCP, motor contactor, and overload relay, rated as a UL 60947-4-1 Type D Combination Motor Controller. Values in Table 201 are for Type 2 coordination with Allen-Bradley contactors and overload relays.

Combination motor controller components:

- Circuit breaker—Bulletin 140MG MCP, G-, H-, J-, K-, M-Frame
- Contactor—Bulletin 100-C, 100S-C, 100-D, 100S-D
- Overload relay—Bulletin 193/592 E1 Plus™, E3™, E3 Plus™, E300™

Table 201 - Type D Combination Ratings per IEC 60947-2/GB 14048.2

Attribute			Bulletin 140MG MCP				
			G	H	J	K	M
Rated ultimate short-circuit breaking capacity, I_{cu}	220-230V AC	[kA]	100	100	100	65	65
	380V AC	[kA]	100	100	100	65	65
	400-415V AC	[kA]	100	100	100	65	65
	440V AC	[kA]	65	65	65	65	65
	500V AC	[kA]	50	50	50	50	50
	525V AC	[kA]	50	50	50	50	50
	690V AC	[kA]	–	50	50	25	25
Rated service short-circuit breaking capacity, I_{cs}(2)	220-230V AC	% I_{cu}	100%	100%	100%	100%	100%
	380V AC	% I_{cu}	100%	100%	100%	100%	100%
	400-415V AC	% I_{cu}	100%	100%	100%	100%	100%
	440V AC	% I_{cu}	100%	100%	100%	100%	100%
	500V AC	% I_{cu}	100%	100%	100%	100%	100%
	525V AC	% I_{cu}	100%	100%	100%	100%	100%
	690V AC	% I_{cu}	100%	100%	100%	100%	100%

Bulletin 140MG Motor Protection Circuit Breakers

Table 202 - Performance Characteristics

Attribute			H-Frame	J-Frame
Max. Rated Current		[A]	100	150
Rated insulation voltage, U_i, IEC		[V]	1000	1000
Rated impulse withstand voltage, U_{imp}		[kV]	8	8
NEMA, UL, CSA Ratings				
Interrupting Rating Code(1)			**H8**	**J8**
240V AC, 50/60 Hz		[kA]	150	150
480V AC, 50/60 Hz		[kA]	65	65
600V AC, 50/60 Hz		[kA]	25	25
IEC 60947-2 Ratings				
Rated ultimate short-circuit breaking capacity, I_{cu}	220...230V AC, 50/60 Hz	[kA]	100	100
	380V AC, 50/60 Hz	[kA]	70	70
	400...415V AC, 50/60 Hz	[kA]	70	70
	440V AC, 50/60 Hz	[kA]	65	65
	525V AC, 50/60 Hz	[kA]	15	45
	550V AC, 50/60 Hz	[kA]	15	45
	690V AC, 50/60 Hz	[kA]	15	15
	250V DC- 2 poles in series	[kA]	70	70
	500V DC- 3 poles in series	[kA]	70	70
Rated service short-circuit breaking capacity, I_{cs}	220...230V AC, 50/60 Hz	% I_{cu}	100%	100%
	380V AC, 50/60 Hz	% I_{cu}	100%	100%
	400...415V AC, 50/60 Hz	% I_{cu}	100%	100%
	440V AC, 50/60 Hz	% I_{cu}	100%	100%
	525V AC, 50/60 Hz	% I_{cu}	100%	100%
	550V AC, 50/60 Hz	% I_{cu}	100%	100%
	690V AC, 50/60 Hz	% I_{cu}	100%	100%
	250V DC- 2 poles in series	% I_{cu}	100%	100%
	500V DC- 3 poles in series	% I_{cu}	100%	100%

(1) Explanation of Interrupting Code. Example: code H8, H=H-Frame; 8= 65 kA@480V. See product selection for complete ratings

Table 203 - Mechanical and Environmental Ratings

Attribute		H-Frame	J-Frame
Mechanical Life	[No. of Operations]	25000	25000
	[Operations/hour]	240	240
Electrical Life @ 415V (AC)	[No. of Operations]	8000	8000
	[Operations/hour]	120	120
Wire Temperature Rating(1)		Cu; 75 °C (167 °F)	Al or Cu; 75 °C (167 °F)
Ambient Temperature without derating		40 °C (104 °F)	40 °C (104 °F)
Operational Temperature		-25...+70 °C (-13...+158 °F)	-25...+70 °C (-13...+158 °F)
Storage Temperature		-40...+70 °C (-40...158 °F)	-40...+70 °C (-40...158 °F)
Dimensions [Width/Depth/Height]	[mm (in.)]	90 x 82.5 x 130 (3.54 x 3.25 x 5.12)	105 x 82.5 x 160 (4.13 x 3.25 x 6.3)
Weight (approx.)	[lb. (kg)]	2.6 (1.2)	5.5 (2.5)

(1) Wire temperature rating is determined by testing the circuit breaker under full load current with the conductors sized for 75 °C (167 °F).

Temperature Derating for All Bulletin 140G/MG Devices

140G G-Frame Thermal-magnetic Circuit Breakers

G-Frame thermal-magnetic circuit breakers are calibrated at 40 °C (104 °F). For applications at other temperatures, the thermal trip varies as shown in Table 204.

Table 204 - 140G G-Frame Max. Thermal Trip Rating

Rated Current I_n [A]	Ambient Temperature			
	40 °C (104 °F)	50 °C (122 °F)	60 °C (140 °F)	70 °C (158 °F)
15	15	14	13	12
16	16	15	14	13
20	20	19	18	16
25	25	23	22	20
30	30	28	26	24
32	32	30	28	26
40	40	38	35	33
45	45	42	40	37
50	50	47	44	41
60	60	56	52	49
63	63	59	55	51
70	70	66	61	57
80	80	75	70	65
90	90	85	79	73
100	100	94	88	81
110	110	103	96	90
125	125	117	109	102
160(1)	160(1)	150(1)	140(1)	130(1)

(1) IEC only.

140G G-Frame Molded Case Switches and Motor Circuit Protectors

Molded case switches and motor circuit protectors do not undergo tripping variations based on ambient temperature. Even though ambient temperature does not affect the tripping characteristic, for temperatures exceeding +40 °C (104 °F), it is advisable to reduce the maximum current to help prevent terminal overheating. Table 205 shows the maximum current to help prevent terminal overheating.

Table 205 - Maximum Operating Current I_n above 40 °C (104 °F)—G-Frame Devices

	North American (UL) Ratings			
	40 °C (104 °F)	50 °C (122 °F)	60 °C (140 °F)	70 °C (158 °F)
I_n [A]	3	3	3	3
	7	7	7	7
	15	15	15	15
	30	30	30	30
	50	50	50	50
	70	70	70	70
	80	80	79	79
	100	93	84	79
	125(1)	112(1)	97(1)	79(1)

	IEC Ratings			
	40 °C (104 °F)	50 °C (122 °F)	60 °C (140 °F)	70 °C (158 °F)
I_n [A]	3	3	3	3
	7	7	7	7
	15	15	15	15
	30	30	30	30
	50	50	50	50
	70	70	70	70
	80	80	80	80
	100	100	100	100
	125	125	125	125
	160(1)	160(1)	125(1)	136(1)

(1) Molded case switch rated current

140G H-Frame Thermal-magnetic Circuit Breakers

H-Frame thermal-magnetic circuit breakers are calibrated at 40 °C (104 °F). For applications at other temperatures, the thermal trip varies as shown in Table 206.

Table 206 - 140G H-Frame Max. Thermal Trip Rating

Rated Current I_n [A]	Ambient Temperature			
	40 °C (104 °F)	50 °C (122 °F)	60 °C (140 °F)	70 °C (158 °F)
15	15	14	13	12
16	16	15	14	13
20	20	19	17	16
25	25	23	22	20
30	30	28	26	24
32	32	30	28	26
40	40	37	35	32
50	50	47	43	40
60	60	56	52	49
63	63	59	55	51
70	70	66	61	57
80	80	75	70	65
90	90	86	78	73
100	100	93	87	81
110	110	103	96	89
125	125	117	109	101
160(1)	160(1)	150(1)	139(1)	129(1)

(1) IEC only.

140G H-Frame Electronic Trip Circuit Breakers, Molded Case Switches, and Motor Circuit Protectors

Electronic trip circuit breakers do not undergo tripping variations based on ambient temperature. Even though ambient temperature does not affect the tripping characteristic, for temperatures exceeding +40 °C (104 °F), it is advisable to reduce the maximum current to help prevent terminal overheating. The same considerations are appropriate for molded case switches and motor circuit protectors.

Table 207 shows the maximum current to help prevent terminal overheating.

Table 207 - Maximum Operating Current I_n above 40 °C (104 °F)—H-Frame Devices

	North American (UL) Ratings			
	40 °C (104 °F)	50 °C (122 °F)	60 °C (140 °F)	70 °C (158 °F)
I_n [A]	3	3	3	3
	7	7	7	7
	15	15	15	15
	30	30	30	30
	50	50	50	50
	70	70	70	70
	80	80	79	79
	100	93	84	79
	125(1)	112(1)	97(1)	79(1)

	IEC Ratings			
	40 °C (104 °F)	50 °C (122 °F)	60 °C (140 °F)	70 °C (158 °F)
I_n [A]	3	3	3	3
	7	7	7	7
	15	15	15	15
	30	30	30	30
	50	50	50	50
	70	70	70	70
	80	80	80	80
	100	100	100	100
	125	125	125	125
	160(1)	160(1)	146(1)	131(1)

(1) Molded case switch rated current

140G I-Frame Thermal-magnetic Circuit Breakers

I-Frame thermal-magnetic circuit breakers are calibrated at 40 °C (104 °F). For applications at other temperatures, the thermal trip varies as shown in Table 208.

Table 208 - 140G I-Frame Max. Thermal Trip Rating

Rated Current I_n [A]	Ambient Temperature			
	40 °C (104 °F)	50 °C (122 °F)	60 °C (140 °F)	70 °C (158 °F)
60	60	56	52	49
63	63	59	55	51
70	70	66	60	56
80	80	75	69	64
90	90	84	78	72
100	100	93	87	80
110	110	102	95	88
125	125	116	108	100
150	150	140	130	121
160	160	149	139	129
200	200	186	173	161
225	225	210	196	181

140G I-Frame Molded Case Switches and Motor Circuit Protectors

Molded case switches and motor circuit protectors do not undergo tripping variations based on ambient temperature. Even though ambient temperature does not affect the tripping characteristic, for temperatures exceeding +40 °C (104 °F), it is advisable to reduce the maximum current to help prevent terminal overheating. Table 209 shows the maximum current to help prevent terminal overheating.

Table 209 - Maximum Operating Current I_n above 40 °C (104 °F)—I-Frame Devices

North American (UL) Ratings				
	40 °C (104 °F)	50 °C (122 °F)	60 °C (140 °F)	70 °C (158 °F)
I_n [A]	100	100	100	100
	110	110	110	110
	125	125	125	125
	150	148	153	142
	200	181	161	142
	225(1)	199(1)	175(1)	142(1)

IEC Ratings				
	40 °C (104 °F)	50 °C (122 °F)	60 °C (140 °F)	70 °C (158 °F)
I_n [A]	100	100	100	100
	110	110	110	110
	125	125	125	125
	150	150	150	150
	200	200	200	200
	225(1)	225(1)	214(1)	204(1)

(1) Molded case switch rated current

140G J-Frame Thermal-magnetic Circuit Breakers

J-Frame thermal-magnetic circuit breakers are calibrated at 40 °C (104 °F). For applications at other temperatures, the thermal trip varies as shown in Table 210.

Table 210 - 140G J-Frame Max. Thermal Trip Rating

Rated Current I_n [A]	Ambient Temperature			
	40 °C (104 °F)	50 °C (122 °F)	60 °C (140 °F)	70 °C (158 °F)
25	25	23	21	19
30	30	25	23	20
32	32	27	24	21
35	35	32	30	26
40	40	37	34	30
50	50	46	42	39
60	60	56	51	45
63	63	58	53	48
70	70	65	58	51
80	80	74	66	58
90	90	86	77	68
100	100	95	85	75
110	110	101	92	84
125	125	115	105	95
160	160	150	137	140
175	175	166	153	142
200	200	190	175	160
225	225	208	190	170
250	250	240	230	220

140G J-Frame Electronic Trip Circuit Breakers, Molded Case Switches, and Motor Circuit Protectors

Electronic trip circuit breakers do not undergo tripping variations based on ambient temperature. Even though ambient temperature does not affect the tripping characteristic, for temperatures exceeding +40 °C (104 °F), it is advisable to reduce the maximum current to help prevent terminal overheating. The same considerations are appropriate for molded case switches and motor circuit protectors.

Table 211 shows the maximum current to help prevent terminal overheating.

Table 211 - Maximum Operating Current I_n above 40 °C (104 °F)—J-Frame Devices

	North American (UL) Ratings			
	40 °C (104 °F)	50 °C (122 °F)	60 °C (140 °F)	70 °C (158 °F)
I_n [A]	150	150	150	150
	175	175	164	158
	200	200	172	158
	225	225	180	158
	250(1)	250(1)	222(1)	158(1)

	IEC Ratings			
	40 °C (104 °F)	50 °C (122 °F)	60 °C (140 °F)	70 °C (158 °F)
I_n [A]	150	150	150	150
	175	175	175	175
	200	200	200	200
	225	225	221	213
	250(1)	250(1)	238(1)	213(1)

(1) Molded case switch rated current

140G K-Frame Thermal-magnetic Circuit Breakers

K-Frame thermal-magnetic circuit breakers are calibrated at 40 °C (104 °F). For applications at other temperatures, the thermal trip varies as shown in Table 212.

Table 212 - 140G K-Frame Max. Thermal Trip Rating

Rated Current I_n [A]	Ambient Temperature			
	40 °C (104 °F)	50 °C (122 °F)	60 °C (140 °F)	70 °C (158 °F)
300	300	286	267	247
320	320	305	285	263
400	400	380	355	325

140G K-Frame Electronic Trip Circuit Breakers, Molded Case Switches, and Motor Circuit Protectors

Electronic trip circuit breakers do not undergo tripping variations based on ambient temperature. Even though ambient temperature does not affect the tripping characteristic, for temperatures exceeding +40 °C (104 °F), it is advisable to reduce the maximum current to help prevent terminal overheating. The same considerations are appropriate for molded case switches and motor circuit protectors.

Table 213 shows the maximum current to help prevent terminal overheating.

Table 213 - Maximum Operating Current I_n above 40 °C (104 °F)—K-Frame Devices

North American (UL) Ratings				
	40 °C (104 °F)	50 °C (122 °F)	60 °C (140 °F)	70 °C (158 °F)
I_n [A]	300	264	228	189
	400(1)	352(1)	304(1)	252(1)

IEC Ratings				
	40 °C (104 °F)	50 °C (122 °F)	60 °C (140 °F)	70 °C (158 °F)
I_n [A]	320	320	320	320
	400(1)	400(1)	400(1)	352(1)

(1) Molded case switch rated current

140G M-Frame Thermal-magnetic Circuit Breakers

M-Frame thermal-magnetic circuit breakers are calibrated at 40 °C (104 °F). For applications at other temperatures, the thermal trip varies as shown in Table 214.

Table 214 - 140G M-Frame Max. Thermal Trip Rating

Rated Current I_n [A]	Ambient Temperature			
	40 °C (104 °F)	50 °C (122 °F)	60 °C (140 °F)	70 °C (158 °F)
600	600	552	514	476
630 (IEC only)	630	580	540	500
800	800	740	670	610

140G M-Frame Electronic Trip Circuit Breakers, Molded Case Switches, and Motor Circuit Protectors

Electronic trip circuit breakers do not undergo tripping variations based on ambient temperature. Even though ambient temperature does not affect the tripping characteristic, for temperatures exceeding +40 °C (104 °F), it is advisable to reduce the maximum current to help prevent terminal overheating. The same considerations are appropriate for molded case switches and motor circuit protectors.

Table 215 shows the maximum current to help prevent terminal overheating.

Table 215 - Maximum Operating Current I_n above 40 °C (104 °F)—M-Frame Devices

North American (UL) Ratings				
	40 °C (104 °F)	50 °C (122 °F)	60 °C (140 °F)	70 °C (158 °F)
I_n [A]	600	528	456	378
	800(1)	704(1)	608(1)	504(1)

IEC Ratings				
	40 °C (104 °F)	50 °C (122 °F)	60 °C (140 °F)	70 °C (158 °F)
I_n [A]	630	630	598.5	567
	800(1)	800(1)	760(1)	720(1)

(1) Molded case switch rated current

140G N/NS-Frame Electronic Trip Circuit Breakers, Molded Case Switches, and Motor Circuit Protectors

N/NS-Frame electronic trip circuit breakers do not undergo tripping variations based on ambient temperature. Even though ambient temperature does not affect the tripping characteristic, for temperatures exceeding +40 °C (104 °F), it is advisable to reduce the maximum current to help prevent terminal overheating.

The same considerations are appropriate for molded case switches and motor circuit protectors.

Table 216 shows the maximum current to help prevent terminal overheating.

Table 216 - Maximum Operating Current I_n above 40 °C (104 °F)—N/NS-Frame Devices

North American (UL) Ratings				
	40 °C (104 °F)	50 °C (122 °F)	60 °C (140 °F)	70 °C (158 °F)
I_n [A]	1200(1)	1056(1)	815(1)	756(1)

IEC Ratings				
	40 °C (104 °F)	50 °C (122 °F)	60 °C (140 °F)	70 °C (158 °F)
I_n [A]	1250(1)	1250(1)	1118(1)	980(1)

(1) Molded case switch rated current

140G R-Frame Electronic Trip Circuit Breakers and Molded Case Switches

R-Frame electronic trip circuit breakers do not undergo tripping variations based on ambient temperature. Even though ambient temperature does not affect the tripping characteristic, for temperatures exceeding +40 °C (104 °F), it is advisable to reduce the maximum current to help prevent terminal overheating. The same considerations are appropriate for molded case switches, except instead of a current adjustment, the table should be used to reflect the maximum current at the specific temperature.

Table 217 shows the maximum adjustment at which the threshold I_1 of the overcurrent protection (L) must be set according to the ambient temperature.

Table 217 - Maximum Operating Current I_n above 40 °C (104 °F)—R-Frame Devices

North American (UL) Ratings				
	40 °C (104 °F)	50 °C (122 °F)	60 °C (140 °F)	70 °C (158 °F)
I_n [A]	2000	1760	1520	1260
	2500(1)	2200(1)	1900(1)	1575(1)
	3000	2640	2280	1890

IEC Ratings				
	40 °C (104 °F)	50 °C (122 °F)	60 °C (140 °F)	70 °C (158 °F)
I_n [A]	2000	2000	1826	1633
	2500(1)	2500(1)	2283(1)	2042(1)

(1) Molded case switch rated current

Watt Loss for All Bulletin 140G/MG Devices

Table 218 - 140G G-Frame Circuit Breakers Watt Loss

	Type	Rated Current I_n [A]	Watt Loss	
			3 Poles	4 Poles
	Thermal-magnetic	15	4.0	5.3
		16	4.5	6.0
		20	5.4	7.2
		25	6.0	8.0
		30	5.5	7.4
		32	6.3	8.4
		35	6.0	8.0
		40	7.8	10.4
		45	9.0	12.0
		50	11.1	14.8
		60	11.7	15.6
		63	12.9	17.2
		70	11.0	14.7
		80	14.4	19.2
		90	17.0	22.7
		100	21.0	28.0
		110	24.9	33.1
		125	32.1	42.8
		160(1)	45.0	60.0
	Molded Case Switch	25	1.2	1.6
		50	4.9	6.6
		75	11.1	14.8
		100	19.8	26.4
		125	30.9	41.2

(1) IEC only

Table 219 - 140MG G-Frame Motor Circuit Protectors Watt Loss

	Rated Current I_n [A]	Watt Loss
	3	4.2
	7	9.9
	15	3.3
	30	6.9
	50	9.3
	70	15.9
	80	15.9
	100	19.8
	125	30.9

Table 220 - 140G H-Frame Circuit Breakers Watt Loss

	Type	Rated Current I_n [A]	Watt Loss	
			3 Poles	4 Poles
	Thermal-magnetic	15	3.4	4.6
		16	3.9	5.2
		20	4.8	6.4
		25	5.4	7.2
		30	6.9	9.1
		32	7.8	10.4
		35	8.5	11.3
		40	11.1	14.8
		50	12.3	16.4
		60	13.3	17.4
		63	14.4	19.2
		70	13.3	17.8
		80	17.4	23.2
		90	19.7	26.2
		100	24.3	32.4
		110	26.5	35.3
		125	34.2	45.6
		160(1)	48.5	64.6
	Electronic	10	0.3	0.4
		25	2.4	3.2
		60	4.5	6.0
		100	12.6	16.8
		125	19.8	26.4
	Molded Case Switch	25	0.8	1.1
		50	3.2	4.2
		75	7.1	9.5
		100	12.7	16.9
		125	19.8	26.4

(1) IEC only

Table 221 - 140MG H-Frame Motor Circuit Protectors Watt Loss

	Rated Current I_n [A]	Watt Loss
	3	11.1
	7	27.9
	15	19.2
	30	11.4
	50	15
	70	16.5
	80	20.4
	100	24.3
	125	42

Table 222 - 140G I-Frame Circuit Breakers Watt Loss

	Type	Rated Current I_n [A]	Watt Loss	
			3 Poles	4 Poles
	Thermal-magnetic	60	11.7	15.6
		63	12.9	17.2
		70	11.0	14.7
		80	14.4	19.2
		90	13.6	18.1
		100	16.8	22.4
		110	17.4	23.2
		125	19.8	26.4
		150	20.8	27.8
		160	23.7	31.6
		175	30.3	40.4
		200	39.6	52.8
		225	43.2	57.6
	Molded Case Switch	25	0.5	0.7
		50	2.1	2.8
		75	4.8	6.4
		100	8.5	11.4
		125	13.3	17.8
		150	19.2	25.6
		175	26.1	34.8
		200	34.1	45.5
		225	43.2	57.6

Table 223 - 140MG I-Frame Motor Circuit Protectors Watt Loss

	Rated Current I_n [A]	Watt Loss
	100	13.5
	110	9.9
	125	12.3
	150	19.5

Table 224 - 140G J-Frame Circuit Breakers Watt Loss

	Type	Rated Current I_n [A]	Watt Loss	
			3 Poles	4 Poles
	Thermal-magnetic	25	8.1	10.7
		30	11.6	15.5
		32	13.2	17.6
		35	13.2	17.6
		40	13.5	18.0
		50	14.1	18.8
		60	14.4	19.2
		63	15.9	21.2
		70	16.2	21.6
		80	16.5	22.0
		90	18.0	24.0
		100	18.6	24.8
		110	20.1	26.8
		125	22.2	29.6
		150	23.5	31.3
		160	26.7	35.6
		175	27.3	36.4
		200	35.7	47.6
		225	39.9	53.1
		250	49.2	65.6
	Electronic	40	1.8	2.4
		60	3.8	5.1
		63	4.2	5.6
		100	10.5	14.0
		150	23.5	31.4
		225	53.0	70.6
		250	65.4	87.2
	Molded Case Switch	25	0.7	0.9
		50	2.6	3.5
		75	5.9	7.8
		100	10.5	14.0
		125	16.4	21.8
		150	23.5	31.4
		175	32.0	42.7
		200	41.9	55.8
		225	53.0	70.6
		250	65.4	87.2

Table 225 - 140MG J-Frame Motor Circuit Protectors Watt Loss

	Rated Current I_n [A]	Watt Loss
	150	23.4
	175	27.3
	200	35.7
	225	39.9
	250	49.2

Table 226 - 140G K-Frame Circuit Breakers Watt Loss

	Type	Rated Current I_n [A]	Watt Loss	
			3 Poles	4 Poles
	Thermal-magnetic	300	40.8	54.4
		400	58.5	78.0
	Molded Case Switch	300	31.8	42.4
		400	49.5	66.0

Table 227 - 140MG K-Frame Motor Circuit Protectors Watt Loss

	Rated Current I_n [A]	Watt Loss
	300	31.8
	400	49.5

Table 228 - 140G M-Frame Circuit Breakers Watt Loss

	Type	Rated Current I_n [A]	Watt Loss	
			3 Poles	4 Poles
	Thermal-magnetic	600	90.0	120.0
		630[1]	91.8	122.4
		800	93.0	124.0
	Molded Case Switch	600	86.4	115.2
		630[1]	90.0	120.0
		800	96.0	128.0

(1) IEC only

Table 229 - 140MG M-Frame Motor Circuit Protectors Watt Loss

	Rated Current I_n [A]	Watt Loss
	600	86.4
	800	96.0

Table 230 - 140G N/NS-Frame Circuit Breakers Watt Loss

	Type	Rated Current I_n [A]	Watt Loss	
			3 Poles	4 Poles
	Electronic	1200	252.0	336.0
	Molded Case Switch	1200	252.0	336.0

Table 231 - 140MG N-Frame Motor Circuit Protectors Watt Loss

	Rated Current I_n [A]	Watt Loss
	1200	252.0

Table 232 - 140G R-Frame Circuit Breakers Watt Loss

	Type	Rated Current I_n [A]	Watt Loss	
			3 Poles	4 Poles
	Electronic	2000	138	184
		2500	219	292
		3000	351	468
	Molded Case Switch	2000	138	184
		2500	219	292
		3000	351	468

Accessory Specifications

Table 233 - Auxiliary Contacts

Catalog Number 140G-...	Factory-installed Modification Order Code	Electrical Operating Ratings (Nominal Values)							
		Description	Electrical Specifications (1)						
			Rated Voltage U_e [V]	Wire Size		Wire Length	IEC Rating		UL Rating
				AWG	mm^2		Rated Operational Current (AC)	Rated Operational Current (DC)	
G-EA1R1A	-AA	1 Aux - N.O./N.C.; 1 AL - N.O./N.C.	250V	20	0.5	1 m (39 in.)	6 A @ 250 V AC (2)	0.5 A @ 110V DC; 0.3 A @ 250V DC (min. 0.03 A DC)	5 A @ 125V AC; 3 A @ 250V AC
K-EA1R1A		1 Aux - N.O./N.C.; 1 AL - N.O./N.C.	250V	20	0.5	1 m (39 in.)	6 A @ 250V AC (2)	0.5 A @ 110V DC; 0.3 A @ 250V DC (min. 0.03 A DC)	5 A @ 125V AC; 6 A @ 250V AC
H-EA1R1ZB	-AB	1 Aux - N.O./N.C.; 1 AL - N.O./N.C.	400V	17	1	1 m (39 in.)	12 A @ 250V AC; 3 A @ 400V AC	0.5 A @ 125V DC; 0.3 A @ 250V DC	10 A @ 125V AC; 10 A @ 250V AC
K-EA1R1B		1 Aux - N.O./N.C.; 1 AL - N.O./N.C.	400V	17	1	1 m (39 in.)	12 A @ 250V AC; 3 A @ 400V AC	0.5 A @ 125V DC; 0.3 A @ 250V DC	12 A @ 125V AC; 12 A @ 250V AC
N-EA1R1B		1 Aux - N.O./N.C.; 1 AL - N.O./N.C.	400V	17	1	1 m (39 in.)	12 A @ 250V AC; 3 A @ 400V AC	0.5 A @ 125V DC; 0.3 A @ 250V DC	12 A @ 125V AC; 12 A @ 250V AC
G-EA1R1J	-AJ	1 Aux - N.O./N.C.; 1 AL - N.O./N.C.	24V	20	0.5	1 m (39 in.)	—	Max 0.1 A @ 24V DC; Min 0.01 A @ 5V DC	Yes
N-EA1R1J		1 Aux - N.O./N.C.; 1 AL - N.O./N.C.	24V	20	0.5	1 m (39 in.)	—	Max 0.1 A @ 24V DC; Min 0.01 A @ 5V DC	Yes
G-EA2R1A	-BA	2 Aux - N.O./N.C.; 1 AL - N.O./N.C.	250V	20	0.5	1 m (39 in.)	6 A @ 250V AC (2)	0.5 A @ 110V DC; 0.3 A @ 250V DC (min. 0.03 A DC)	5 A @ 125V AC; 3 A @ 250V AC
H-EA3R1A	-CA	3 Aux - N.O./N.C.; 1 AL - N.O./N.C.	250V	20	0.5	1 m (39 in.)	6 A @ 250V AC (2)	0.5 A @ 110V DC; 0.3 A @ 250V DC (min. 0.03 A DC)	5 A @ 125V AC; 3 A @ 250V AC
K-EA3R1A		3 Aux - N.O./N.C.; 1 AL - N.O./N.C.	250V	20	0.5	1 m (39 in.)	6 A @ 250V AC (2)	0.5 A @ 110V DC; 0.3 A @ 250V DC (min. 0.03 A DC)	5 A @ 125V AC; 6 A @ 250V AC
H-EA3R1J	-CJ	3 Aux - N.O./N.C.; 1 AL - N.O./N.C.	24V	20	0.5	1 m (39 in.)	—	Max 0.1 A @ 24V DC; Min 0.01 A @ 5V DC	Yes
K-EA3R1J		3 Aux - N.O./N.C.; 1 AL - N.O./N.C.	24V	20	0.5	1 m (39 in.)	—	Max 0.1 A @ 24V DC; Min 0.01 A @ 5V DC	Yes
H-EA1TA	-DA	1 TU AL - N.O./N.C. (Thermal)	250V	20	0.5	1 m (39 in.)	6 A @ 250V AC (2)	0.5 A @ 110V DC; 0.3 A @ 250V DC (min. 0.03 A DC)	5 A @ 125V AC; 3 A @ 250V AC
H-EA1TJ	-DJ	1 TU AL - N.O./N.C. (Thermal)	24V	20	0.5	1 m (39 in.)	—	Max 0.1 A @ 24V DC; Min 0.01 A @ 5V DC	Yes
H-EA2B	-FB	2 Aux - N.O./N.C.	400V	17	1	1 m (39 in.)	12 A @ 250V AC; 3 A @ 400V AC	0.5 A @ 125V DC; 0.3 A @ 250V DC	12 A @ 125V AC; 12 A @ 250V AC
K-EA2B		2 Aux - N.O./N.C.	400V	17	1	1 m (39 in.)	12 A @ 250V AC; 3 A @ 400V AC	0.5 A @ 125V DC; 0.3 A @ 250V DC	10 A @ 125V AC; 10 A @ 250V AC
G-EA1A	-KA	1 Aux - N.O./N.C.	250V	20	0.5	1 m (39 in.)	6 A @ 250V AC (2)	0.5 A @ 110V DC; 0.3 A @ 250V DC (min. 0.03 A DC)	5 A @ 125V AC; 3 A @ 250V AC
G-EA1AU	-TA	1 Aux - N.O./N.C. or 1 AL - N.O./N.C.	250V	20	0.5	1 m (39 in.)	6 A @ 250V AC (2)	0.5 A @ 110V DC; 0.3 A @ 250V DC (min. 0.03 A DC)	—
G-EA1J	—	1 Aux - N.O./N.C. or 1 AL - N.O./N.C.	24V	20	0.5	1 m (39 in.)	—	Max 0.1 A @ 24V DC; Min 0.01 A @ 5V DC	Yes

Table 233 - Auxiliary Contacts (Continued)

Catalog Number 140G-...	Factory-installed Modification Order Code	Electrical Operating Ratings (Nominal Values)							
		Description	Electrical Specifications (1)						
			Rated Voltage U_e [V]	Wire Size		Wire Length	IEC Rating		UL Rating
				AWG	mm^2		Rated Operational Current (AC)	Rated Operational Current (DC)	
H-EA2R2TA	–	2 Aux - N.O./N.C.; 2 AL - N.O./N.C. (Thermal)	250V	20	0.5	1 m (39 in.)	6 A @ 250V AC (2)	0.5 A @ 110V DC; 0.3 A @ 250V DC (min. 0.03 A DC)	5 A @ 125V AC; 3 A @ 250V AC
H-EA3R2A	–	3 Aux - N.O./N.C.; 2 AL - N.O./N.C.	250V	20	0.5	1 m (39 in.)	6 A @ 250V AC (2)	0.5 A @ 110V DC; 0.3 A @ 250V DC (min. 0.03 A DC)	5 A @ 125V AC; 3 A @ 250V AC
N-EA1TA	–	1 AL - N.O./N.C. (Thermal)	250V	20	0.5	1 m (39 in.)	6 A @ 250V AC (2)	0.5 A @ 110V DC; 0.3 A @ 250V DC (min. 0.03 A DC)	–
N-EA2B	–	2 Aux - N.O./N.C.	400V	17	1	1 m (39 in.)	12 A @ 250V AC; 3 A @ 400V AC	0.5 A @ 125V DC; 0.3 A @ 250V DC	12 A @ 125V AC; 12 A @ 250V AC
N-EA2J	–	2 Aux - N.O./N.C.	24V	20	0.5	1 m (39 in.)	–	Max. – 0.1 A @ 24V DC; Min. – 0.01 A @ 5V DC	Yes
R-EA1TA	–	1 AL - N.O./N.C. (Thermal)	250V	(3)	(3)	(3)	6 A @ 250V AC (2)	0.5 A @ 110V DC; 0.3 A @ 250V DC (min. 0.03 A DC)	–
R-EA4A	–	4 Aux - N.O./N.C.	400V	(3)	(3)	(3)	12 A @ 250V AC; 3 A @ 400V AC	0.5 A @ 125V DC; 0.3 A @ 250V DC	15 A @ 125V AC; 15 A @ 250V AC
R-EA4J	–	4 Aux - N.O./N.C.	24V	(3)	(3)	(3)	–	Max. – 0.1 A @ 24V DC; Min. – 0.01 A @ 5V DC	Yes
G-EAB1B	–	1 N.C. Early Break	400 V	17	1	1 m (39 in.) 1 m (39 in.)	12 A @ 250V AC; 3 A @ 400V AC	0.5 A @ 125V DC; 0.3 A @ 250V DC	12 A @ 125V AC; 12 A @ 250V AC
G-EAM1B	–	1 N.O. Early Make	400 V	17	1	1 m (39 in.) 1 m (39 in.)	12 A @ 250V AC; 3 A @ 400V AC	0.5 A @ 125V DC; 0.3 A @ 250V DC	12 A @ 125V AC; 12 A @ 250V AC
K-EAM1A	–	1 N.O. Early Make	250V	20	0.5	1 m (39 in.) 1 m (39 in.)	6 A @ 250V AC (2)	0.5 A @ 110V DC; 0.3 A @ 250V DC (min. 0.03 A DC)	–
M-EAM1A		1 N.O. Early Make	250V	20	0.5	1 m (39 in.) 1 m (39 in.)	6 A @ 250V AC (2)	0.5 A @ 110V DC; 0.3 A @ 250V DC (min. 0.03 A DC)	–

(1) Contacts are wired with 600 V (UL/CSA) insulated wire. No voltage derating of circuit breaker required.
(2) See Table 234 for expanded description of the voltage ratings.
(3) Contact your local Rockwell Automation sales office or Allen-Bradley distributor.

Table 234 - 250 V AC/DC Expanded Description

250 V AC/DC Expanded Description			
Voltage	Class of use	AC	DC
110V DC	DC-12	–	0.5 A
	DC-14	–	0.05 A
125V AC/DC	AC-12, AC-13, AC-14	6 A	–
250V AC/DC	AC-15	5 A	–
	AC-12 and DC-12	6 A	0.3 A
	AC-13	6 A	–
	AC-14, DC-14	5 A	0.03 A
	AC-15	4 A	–

All shunt trip devices are wired with 600V (UL/CSA) insulated wire. No voltage derating is required.

Table 235 - Shunt Trip Devices

Application Ratings						Electrical Operating Ratings (Nominal Values)				
Catalog Number	Factory-installed Modification Order Code	Rated Voltage U_e [V]	Wires		Shunt Trip Type	Operation Voltage [V]		Inrush Power Consumption		Opening Time [ms]
			Length	Size		Min	Max	AC [VA]	DC [W]	
140G Frames G, H, I, J										
140G-G-SNR	–	12V DC	1 m (3.3 ft.)	0.5 mm^2/20 AWG	Shunt Open Release	8.4	13.2	–	50	≤ 15
140G-G-SNJ	-SJ	24...30V AC/DC	1 m (3.3 ft.)	0.5 mm^2/20 AWG		16.8	33	50	50	
140G-G-SNKY	-SK	48...60V AC/DC	1 m (3.3 ft.)	0.5 mm^2/20 AWG		33.6	66	60	60	
140G-G-SND	-SD	110...127V AC 110...125V DC	1 m (3.3 ft.)	0.5 mm^2/20 AWG		77	139 AC 137 DC	50	50	
140G-G-SNA	-SA	220...240V AC 220...250V DC	1 m (3.3 ft.)	0.5 mm^2/20 AWG		154	278 AC 274 DC	50	50	
140G-G-SNB	-SB	380...440V AC	1 m (3.3 ft.)	1 mm^2/17 AWG		266	484	55	–	
140G-G-SNC	-SC	480...525V AC	1 m (3.3 ft.)	1 mm^2/17 AWG		336	577	55	–	
140G Frames K, M										
140G-K-SNR	–	12V DC	1 m (3.3 ft.)	0.5 mm^2/20 AWG	Shunt Open Release	8.4	13.2	–	50	≤ 15
140G-K-SNJ	-SJ	24...30V AC/DC	1 m (3.3 ft.)	0.5 mm^2/20 AWG		16.8	33	50	50	
140G-K-SNKY	-SK	48...60V AC/DC	1 m (3.3 ft.)	0.5 mm^2/20 AWG		33.6	66	60	60	
140G-K-SND	-SD	110...127V AC 110...125V DC	1 m (3.3 ft.)	0.5 mm^2/20 AWG		77	139 AC 137 DC	50	50	
140G-K-SNA	-SA	220...240V AC 220...250V DC	1 m (3.3 ft.)	0.5 mm^2/20 AWG		154	278 AC 274 DC	50	50	
140G-K-SNB	-SB	380...440V AC	1 m (3.3 ft.)	1 mm^2/17 AWG		266	484	55	–	
140G-K-SNC	-SC	480...525V AC	1 m (3.3 ft.)	1 mm^2/17 AWG		336	577	55	–	
140G-N-SNJ	-SJ	24V AC/DC	1 m (3.3 ft.)	0.5 mm^2/20 AWG	Shunt Open Release	16.8	26.4	–	300	≤ 20
140G-N-SNKY	-SK	48V AC/DC	1 m (3.3 ft.)	0.5 mm^2/20 AWG		33.6	52.8	300	300	
140G-N-SND	-SD	110...120V AC/DC	1 m (3.3 ft.)	0.5 mm^2/20 AWG		77	132	300	300	
140G-N-SNA	-SA	220...240V AC/DC	1 m (3.3 ft.)	0.5 mm^2/20 AWG		154	264	300	300	
140G-N-SNB	-SB	380...400V AC	1 m (3.3 ft.)	1 mm^2/17 AWG		266	440	300	–	
140G-NS-SNCJ	-RJ	24V AC/DC	1 m (3.3 ft.)	0.5 mm^2/20 AWG	Shunt Close Release	20.4	26.4	300	300	≤ 80
140G-NS-SNCKY	-RK	48V AC/DC	1 m (3.3 ft.)	0.5 mm^2/20 AWG		40.8	52.8	300	300	
140G-NS-SNCD	-RD	110...120V AC/DC	1 m (3.3 ft.)	0.5 mm^2/20 AWG		93.5	126.5	300	300	
140G-NS-SNCA	-RA	220...240V AC/DC	1 m (3.3 ft.)	0.5 mm^2/20 AWG		187	196.5	300	300	
140G-NS-SNCB	-RB	380...400V AC	1 m (3.3 ft.)	1 mm^2/17 AWG		323	440	300	–	
140G Frame R										
140G-R-SNJ	-SJ	24V AC/DC	1 m (3.3 ft.)	0.5 mm^2/20 AWG	Shunt Open Release	16.8	26.4	–	200	≤ 60
140G-R-SNKY	-SK	48V AC/DC	1 m (3.3 ft.)	0.5 mm^2/20 AWG		33.6	52.8	200	200	
140G-R-SND	-SD	110...120V AC/DC	1 m (3.3 ft.)	0.5 mm^2/20 AWG		77	132	200	200	
140G-R-SNA	-SA	220...240V AC/DC	1 m (3.3 ft.)	0.5 mm^2/20 AWG		154	264	200	200	
140G-R-SNB	-SB	380...400V AC/DC	1 m (3.3 ft.)	1 mm^2/17 AWG		266	440	200	–	
140G-R-SNCJ	-RJ	24V AC/DC	1 m (3.3 ft.)	0.5 mm^2/20 AWG	Shunt Close Release	20.4	26.4	–	200	≤ 80
140G-R-SNCKY	-RK	48V AC/DC	1 m (3.3 ft.)	0.5 mm^2/20 AWG		40.8	52.8	200	200	
140G-R-SNCD	-RD	110...120V AC/DC	1 m (3.3 ft.)	0.5 mm^2/20 AWG		93.5	126.5	200	200	
140G-R-SNCA	-RA	220...240V AC/DC	1 m (3.3 ft.)	0.5 mm^2/20 AWG		187	196.5	200	200	
140G-R-SNCB	-RB	380...400V AC/DC	1 m (3.3 ft.)	1 mm^2/17 AWG		323	440	200	–	

All undervoltage release devices are wired with 600V (UL/CSA) insulated wire. No voltage derating is required.

Table 236 - Undervoltage Release Devices

Application Ratings					Electrical Operating Ratings (Nominal Values)					
			Wires		Electrical Specifications					
Catalog Number	Factory-installed Modification Order Code	Rated Voltage U_e [V]	Length	Size	Dropout Voltage [V]		Pickup Voltage Max. [V]	UVR Power Absorbed During Normal Operation		Opening Time [ms]
					Min	Max		AC [VA]	DC [W]	
140G Frames G, H, I, J										
140G-G-UVJ	-UJ	24...30V AC/DC	1 m (3.3 ft.)	0.5 mm^2/20 AWG	8.4	21	25.5	1.5	1.5	≤ 15
140G-G-UVR	-UR	48V AC/DC	1 m (3.3 ft.)	0.5 mm^2/20 AWG	16.8	33.6	40.8	1	1	
140G-G-UVKY	—	60V AC/DC	1 m (3.3 ft.)	0.5 mm^2/20 AWG	21	42	51	1	1	
140G-G-UVD	-UD	110...127V AC 110...125V DC	1 m (3.3 ft.)	0.5 mm^2/20 AWG	38.5	88.9 AC 87.5 DC	108 AC 106 DC	2	2	
140G-G-UVA	-UA	220...240V AC 220...250V DC	1 m (3.3 ft.)	0.5 mm^2/20 AWG	77	154 AC 175 DC	208 AC 212.5 DC	2.5	2.5	
140G-G-UVB	-UB	380...440V AC	1 m (3.3 ft.)	1 mm^2/17 AWG	133	308	374	3	—	
140G-G-UVC	-UC	480...525V AC	1 m (3.3 ft.)	1 mm^2/17 AWG	168	367.5	446	4	—	
140G Frames K, M										
140G-K-UVJ	-UJ	24...30V AC/DC	1 m (3.3 ft.)	0.5 mm^2/20 AWG	8.4	21	25.5	1.5	1.5	≤ 25
140G-K-UVR	-UR	48V AC/DC	1 m (3.3 ft.)	0.5 mm^2/20 AWG	16.8	33.6	40.8	1	1	
140G-K-UVKY	—	60V AC/DC	1 m (3.3 ft.)	0.5 mm^2/20 AWG	21	42	51	1	1	
140G-K-UVD	-UD	110...127V AC 110...125V DC	1 m (3.3 ft.)	0.5 mm^2/20 AWG	38.5	88.9 AC 87.5 DC	108 AC 106 DC	2	2	
140G-K-UVA	-UA	220...240V AC 220...250V DC	1 m (3.3 ft.)	0.5 mm^2/20 AWG	77	154 AC 175 DC	208 AC 212.5 DC	2.5	2.5	
140G-K-UVB	-UB	380...440V AC	1 m (3.3 ft.)	1 mm^2/17 AWG	133	308	374	3	—	
140G-K-UVC	-UC	480...525V AC	1 m (3.3 ft.)	1 mm^2/17 AWG	168	367.5	446	4	—	
140G Frames N, NS										
140G-N-UVJ	-UJ	24V AC/DC	1 m (3.3 ft.)	0.5 mm^2/20 AWG	8.4	21	25.5	—	5	≤ 20
140G-N-UVKY	—	60V AC/DC	1 m (3.3 ft.)	0.5 mm^2/20 AWG	21	42	51	5	5	
140G-N-UVD	-UD	110...120V AC/DC	1 m (3.3 ft.)	0.5 mm^2/20 AWG	38.5	88.9 AC 87.5 DC	108 AC 106 DC	5	5	
140G-N-UVA	-UA	220...240V AC/DC	1 m (3.3 ft.)	0.5 mm^2/20 AWG	77	154 AC 175 DC	208 AC 212.5 DC	5	5	
140G-N-UVB	-UB	380...400V AC	1 m (3.3 ft.)	1 mm^2/17 AWG	133	308	374	5	—	
140G-N-UVC	-UC	415...440V AC	1 m (3.3 ft.)	1 mm^2/17 AWG	168	367.5	446	5	—	
140G Frame R										
140G-R-UVJ	-UJ	24V AC/DC	1 m (3.3 ft.)	0.5 mm^2/20 AWG	8.4	21	25.5	—	5	≤ 30
140G-R-UVKY	—	60V AC/DC	1 m (3.3 ft.)	0.5 mm^2/20 AWG	21	42	51	5	5	
140G-R-UVD	-UD	110...120V AC/DC	1 m (3.3 ft.)	0.5 mm^2/20 AWG	38.5	88.9 AC 87.5 DC	108 AC 106 DC	5	5	
140G-R-UVA	-UA	220...240V AC/DC	1 m (3.3 ft.)	0.5 mm^2/20 AWG	77	154 AC 175 DC	208 AC 212.5 DC	5	5	
140G-R-UVB	-UB	380...400V AC	1 m (3.3 ft.)	1 mm^2/17 AWG	133	308	374	5	—	
140G-R-UVC	-UC	415...440V AC	1 m (3.3 ft.)	0.5 mm^2/20 AWG	168	367.5	446	5	—	

All motor operators are wired with 600V (UL/CSA) insulated wire. No voltage derating is required.

Table 237 - Motor Operators

Application Ratings					Application Specifications, Electrical Operating Ratings (Nominal Values)									
Catalog Number	Rated Voltage U_e [V]	For Use With Frame Size	Wires		Operating Voltage [V]		Time [s]			Min. Control Impulse Time [ms][1]	Inrush Power		UVR Power Absorbed During Normal Operation	
			Length	Size	Min	Max	Open	Close	Reset		AC [VA]	DC [W]	AC [VA]	DC [W]
140G-G-EOPJ	24 V DC	G, I	1 m (3.3 ft.)	0.5 mm^2/20 AWG	(2)	(2)	(2)	(2)	(2)	(2)	(2)	(2)	—	(2)
140G-H-EOPJ		H, J	1 m (3.3 ft.)	0.5 mm^2/20 AWG	20.4	26.4	0.1	0.1	(2)	≥ 150	—	500	—	350
140G-G-EOPKY	48...60 V DC	G, I	1 m (3.3 ft.)	0.5 mm^2/20 AWG	(2)	(2)	(2)	(2)	(2)	(2)	—	(2)	—	350
140G-H-EOPKY		H, J	1 m (3.3 ft.)	0.5 mm^2/20 AWG	40.8	66	0.1	0.1	(2)	≥ 150	—	500	—	350
140G-G-EOPD	110...125 V AC/DC	G, I	1 m (3.3 ft.)	0.5 mm^2/20 AWG	(2)	(2)	(2)	(2)	(2)	(2)	(2)	(2)	(2)	(2)
140G-H-EOPD		H, J	1 m (3.3 ft.)	0.5 mm^2/20 AWG	106.3	137	0.1	0.1	(2)	≥ 150	500	500	350	350
140G-G-EOPA	220...250 V AC/DC	G, I	1 m (3.3 ft.)	0.5 mm^2/20 AWG	(2)	(2)	(2)	(2)	(2)	(2)	(2)	(2)	(2)	(2)
140G-H-EOPA		H, J	1 m (3.3 ft.)	0.5 mm^2/20 AWG	212.6	275	0.1	0.1	(2)	≥ 150	500	500	350	350
140G-G-EOPB	380...440 V AC	G, I	1 m (3.3 ft.)	1 mm^2/17 AWG	(2)	(2)	(2)	(2)	(2)	(2)	(2)	—	(2)	—
140G-H-EOPB		H, J	1 m (3.3 ft.)	1 mm^2/17 AWG	374	484	0.1	0.1	(2)	≥ 150	500	—	350	—
140G-G-EOPC	480...525 V AC	G, I	1 m (3.3 ft.)	1 mm^2/17 AWG	(2)	(2)	(2)	(2)	(2)	(2)	(2)	—	(2)	—
140G-H-EOPC		H, J	1 m (3.3 ft.)	1 mm^2/17 AWG	(2)	(2)	(2)	(2)	(2)	(2)	(2)	(2)	(2)	(2)
140G-K-EOPJ	24 V DC	K	1 m (3.3 ft.)	0.5 mm^2/20 AWG	20.4	26.4	1.5	< 0.1	3	≥ 100	—	300	—	150
140G-M-EOPJ		M	1 m (3.3 ft.)	0.5 mm^2/20 AWG	20.4	26.4	3	< 0.1	5	≥ 100	—	300	—	150
140G-K-EOPKY	48...60 V DC	K	1 m (3.3 ft.)	0.5 mm^2/20 AWG	40.8	66	1.5	< 0.1	3	≥ 100	—	300	—	150
140G-M-EOPKY		M	1 m (3.3 ft.)	0.5 mm^2/20 AWG	40.8	66	3	< 0.1	5	≥ 100	—	300	—	150
140G-K-EOPD	110...125 V AC/DC	K	1 m (3.3 ft.)	0.5 mm^2/20 AWG	106.3	137	1.5	< 0.1	3	≥ 100	300	300	150	150
140G-M-EOPD		M	1 m (3.3 ft.)	0.5 mm^2/20 AWG	106.3	137	3	< 0.1	5	≥ 100	300	300	150	150
140G-K-EOPA	220...250 V AC/DC	K	1 m (3.3 ft.)	0.5 mm^2/20 AWG	212.6	275	1.5	< 0.1	3	≥ 100	300	300	150	150
140G-M-EOPA		M	1 m (3.3 ft.)	0.5 mm^2/20 AWG	212.6	275	3	< 0.1	5	≥ 100	300	300	150	150
140G-K-EOPB	380 V AC	K	1 m (3.3 ft.)	1 mm^2/17 AWG	374	484	1.5	< 0.1	3	≥ 100	300	—	150	—
140G-M-EOPB		M	1 m (3.3 ft.)	1 mm^2/17 AWG	374	484	3	< 0.1	5	≥ 100	300	—	150	—

(1) Opening and closing times.
(2) Contact your local Rockwell Automation sales office or Allen-Bradley distributor.

Table 238 - Spring Charging Motors

Application Ratings					Application Specifications, Electrical Operating Ratings (Nominal Values)					
Cat. No.	Rated Voltage U_e [V]	For Use With Frame Size	Wires		Operating Voltage		Time [s]		Inrush Power	
			Length	Size	Min. [V]	Max. [V]	Inrush	Charging	AC [VA]	DC [W]
140G-NS-SCMJ	24...30 V AC/DC	NS	1 m (3.3 ft.)	0.5 mm^2/20 AWG	20.4	33		8...10	—	≤ 400
140G-NS-SCMKY	48...60 V AC/DC	NS	1 m (3.3 ft.)	0.5 mm^2/20 AWG	40.8	66		8...10	≤ 400	≤ 400
140G-NS-SCMD	100...130 V AC/DC	NS	1 m (3.3 ft.)	0.5 mm^2/20 AWG	106.3	143		8...10	≤ 400	≤ 400
140G-NS-SCMA	220...250 V AC/DC	NS	1 m (3.3 ft.)	0.5 mm^2/20 AWG	212.6	275		8...10	—	≤ 400
140G-NS-SCMB	380...415 V AC	NS	1 m (3.3 ft.)	1 mm^2/17 AWG	323	456		8...10	≤ 400	—
140G-R-SCMJ	24...30 V AC/DC	R	1 m (3.3 ft.)	0.5 mm^2/20 AWG	20.4	33	0.2	4...5	500	500
140G-R-SCMKY	48...60 V AC/DC	R	1 m (3.3 ft.)	0.5 mm^2/20 AWG	40.8	66	0.2	4...5	500	500
140G-R-SCMD	100...130 V AC/DC	R	1 m (3.3 ft.)	0.5 mm^2/20 AWG	106.3	143	0.2	4...5	500	500
140G-R-SCMA	220...250 V AC/DC	R	1 m (3.3 ft.)	0.5 mm^2/20 AWG	212.6	275	0.2	4...5	500	500

Table 239 - Busbar Specifications for Compatibility with Circuit Breaker Terminals

	Frame Size		Busbar Dimensions							Terminal Torque			Hex Tool/ Wrench Size
			Width (A)		Thickness (B)		Terminal Hole Ø (C)	Hole Center (D)	Space Between Terminal Holes (E)	Fastener	[lb•in]	[N•m]	
			Min.	Max.	Min.	Max.							
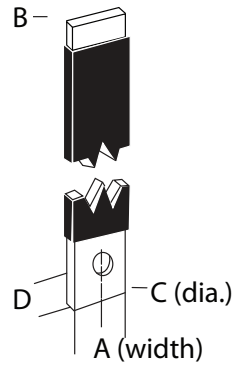	G	[in.]	0.512	0.630	0.138	0.197	0.138	0.63	–	M6	53	6	M5
		[mm]	13	16	3.5	5	6.5	7.5	–				
	H	[in.]	0.512	0.787	0.098	0.197	0.138	0.63	–				
		[mm]	13	20	2.5	5	6.5	7.5	–				
	I	[in.]	0.669	0.984	0.197	0.315	0.335	0.374	–	M8	71	8	M6
		[mm]	17	25	5	8	8.5	9.5	–				
	J	[in.]	0.669	0.984	0.197	0.315	0.335	0.3974	–				
		[mm]	17	25	5	8	8.5	9.5	–				
	K	[in.]	1.38	1.38	0.19	5	0.41	0.43	–	M8	248	28	M8
		[mm]	35	35	0.39	10	10.5	0.11	–				
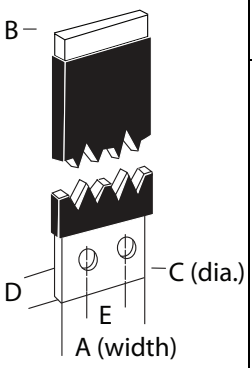	M	[in.]	1.57	–	0.19	0.39	0.25 (each)	0.47	0.88	(2) M6	80	9	M5
		[mm]	50	–	5	10	6.5 (each)	12	22.5				
	N	[in.]	1.96	–	0.4	0.78	0.433	0.55	0.984	(2) M10	161	18	M5
		[mm]	50	–	10	20	11 (each)	14	25				
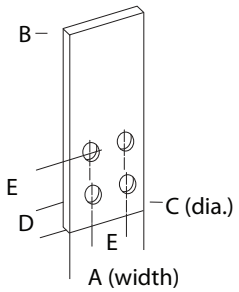	**Front Busbar**												
	R	2000 A[1]	[in.]	4		0.25		0.59	0.79	1.57	Fasteners supplied by customer		
			[mm]	102		6.4		15	20	40			
		2500 A, 80%[1]	[in.]	4		0.25		0.59	0.79	1.57			
			[mm]	102		6.4		15	20	40			
	Rear Busbar[2]												
	R	2000 A[1]	[in.]	4		0.25		0.59	4.5	1.57	Fasteners supplied by customer		
			[mm]	102		6.4		15	114	40			
		2500 A, 80%[1]	[in.]	4		0.25		0.59	4.5	1.57			
			[mm]	102		6.4		15	114	40			
		2500 A, 100%[3]	[in.]	4		0.25		0.512	3.87	1.75	M12 Stud	615	70	19 mm
			[mm]	102		6.4		13	98	44.45			
		3000 A, 80%[3]	[in.]	4		0.25		0.512	3.87	1.75	M12 Stud	615	70	19 mm
			[mm]	102		6.4		13	98	44.45			
		3000 A, 100%[3]	[in.]	4		0.25		0.512	3.87	1.75	M12 Stud	615	70	19 mm
			[mm]	102		6.4		13	98	44.45			

(1) Qty. required: 2
(2) Always use two wrenches to avoid straining the insulating parts of the breaker, and apply the tightening torque of the terminals using high-strength fasteners. Check tightness after 24 hours.
(3) Qty. required: 4

Table 240 - Cable (Ring) Terminal Specifications for Compatibility with Circuit Breaker Terminals

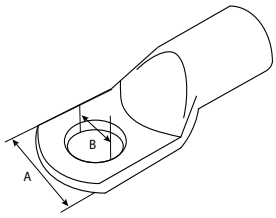

140G Frame Size		Cable (Ring) Terminal Dimensions		No. of Cables	Cable (Ring) Terminal Torque			Fastener Terminal Tool
		Width (A)	Terminal Hole Diameter (B)		Fastener	[lb•in]	[N•m]	
G	[in.]	0.630	0.25	1	M6	53	6	CH5
	[mm]	16	6.5					
H	[in.]	0.787	0.25	1				
	[mm]	20	6.5					
I	[in.]	0.984	0.335	1	M8	71	8	CH6
	[mm]	25	8.5					
J	[in.]	0.984	0.335	1				
	[mm]	25	8.5					
K	[in.]	1.38	0.41	1	M8	248	28	CH8
	[mm]	35	10.5					
M	[in.]	Select extended terminals from Table 241 or spreader terminals from Table 242						
	[mm]							
N, NS	[in.]							
	[mm]							

Table 241 - Busbar or Cable (Ring) Terminal Specifications for Compatibility with Extended Terminal Accessories

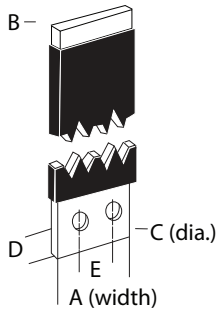

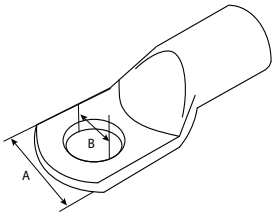

140G Frame Size		Busbar: Max Width (A)	Busbar: Depth to Hole (D)	Busbar: Terminal Hole Diameter (C)	Busbar: No. of Pieces	Busbar: Fastener	Cable Terminal: Max Width (A)	Cable Terminal: Terminal Hole Diameter (B)	Cable Terminal: No. of Cables	Cable Terminal: Fastener	Cable Tightening Torque	
G	[mm]	20	4	8.5	1	M8	20	8.5	1	Class 4.8 screws (not supplied)	[N•m]	9
	[in.]	0.787	0.157	0.335			0.787	0.335			[lb•in]	79.7
H	[mm]	20	4	8.5	1	M8	20	8.5	1		[N•m]	9
	[in.]	0.787	0.157	0.335			0.787	0.335			[lb•in]	79.7
I	[mm]	20	6	10	1	M10	20	10	1		[N•m]	18
	[in.]	0.787	0.236	0.394			0.787	0.394			[lb•in]	159.3
J	[mm]	20	10	10	1	M10	20	10	1		[N•m]	18
	[in.]	0.787	0.394	0.394			0.787	0.394			[lb•in]	159.3
K	[mm]	30	7	2 x 11	2	Not specified	30	11	2		[N•m]	18
	[in.]	1.18	0.28	2 x 0.43			1.18	0.43			[lb•in]	161
M	[mm]	50	5	14	2	Not specified	50	14	2		[N•m]	30
	[in.]	1.97	0.20	0.55			1.97	0.55			[lb•in]	268
N, NS	[mm]	50	10	4 x 11 (1)	2	Class 4.8 screws (not supplied)	—			Class 8.8 screws (not supplied)	[N•m]	40
	[in.]	1.97	0.39	4 x 0.43 (1)							[lb•in]	355

(1) Only use two holes diagonally

Table 242 - Busbar or Cable (Ring) Terminal Specifications for Compatibility with Spreader Terminal Accessories

		Busbar					Cable Terminal					
		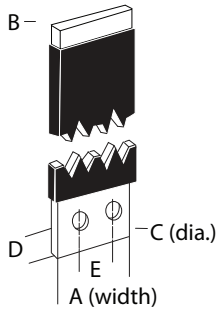					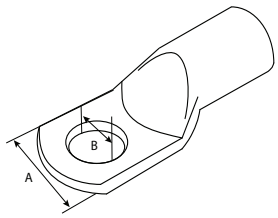					
140G Frame Size		Max Width (A)	Depth to Hole (D)	Terminal Hole Diameter (C)	No. of Pieces	Fastener	Max Width (A)	Terminal Hole Diameter (B)	No. of Cables	Fastener	Cable Tightening Torque	
G	[mm]	25	4	8.5	1	M8	25	8.5	1	M8	[N•m]	9
	[in.]	0.984	0.157	0.335			0.984	0.335			[lb•in]	79.7
H	[mm]	30	4	10.5	1	M10	30	10.5	1	M10	[N•m]	18
	[in.]	1.18	0.157	0.413			1.18	0.413			[lb•in]	159.3
I	[mm]	30	4	10.5	1	M10	30	10.5	1	M10	[N•m]	18
	[in.]	1.18	0.157	0.413			1.18	0.413			[lb•in]	159.3
J	[mm]	30	10	10.5	1	M10	30	10.5	1	M10	[N•m]	18
	[in.]	1.18	0.394	0.413			1.18	0.413			[lb•in]	159.3
K	[mm]	40	10	11	1	Not specified	40	11	1	Class 4.8 screws (not supplied)	[N•m]	18
	[in.]	1.58	0.394	0.43			1.58	0.43			[lb•in]	161
M	[mm]	80	5	3 x 13	1		45	13	3		[N•m]	30
	[in.]	3.15	0.20	3 x 0.51			1.77	0.51			[lb•in]	268
N/NS	[mm]	50	10	3 x 13	2		45	13	3		[N•m]	40
	[in.]	1.97	0.39	3 x 0.51			1.77	0.51			[lb•in]	355

Throughout this section, wiring diagrams have a reference number in the upper left corner, underneath the figure title. This reference number correlates to the reference number that appears on the individual instruction sheet for that device.

Status Contacts

Auxiliary/Alarm Contacts (AX/AL/TU AL)

Figure 14 - Auxiliary Contact (AX2)

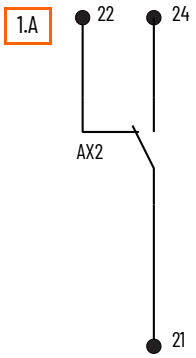

Figure 15 - Alarm Contact (AL1)

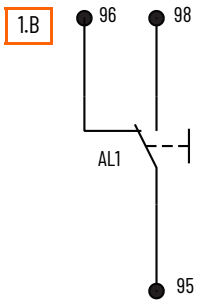

Figure 16 - Trip Unit Alarm Contact (TU AL)

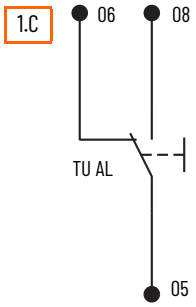

Figure 17 - Auxiliary/Alarm Contacts (AX2/AL1)

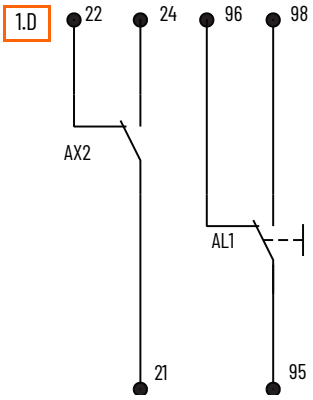

Figure 18 - Auxiliary/Alarm Contacts (AX1/AX2/AL1)

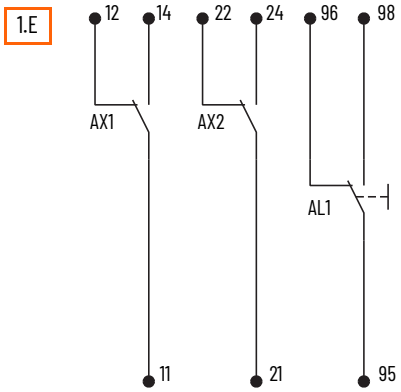

Figure 19 - Auxiliary/Alarm Contacts (AX1/AX2/AX3/AL1)

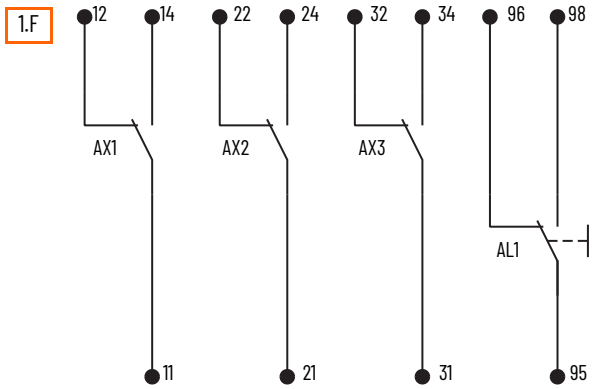

Figure 20 - Auxiliary/Alarm Contacts (AX1/AX2/AX3/AL1/AL2)

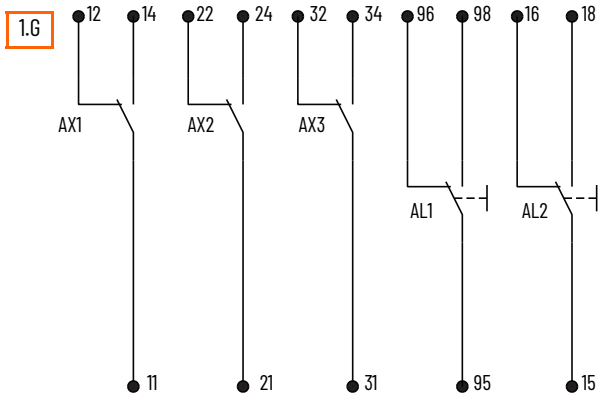

Figure 21 - Auxiliary/Alarm/Trip Unit Contacts (AX2/AX3/AL1/AL2/TU AL)

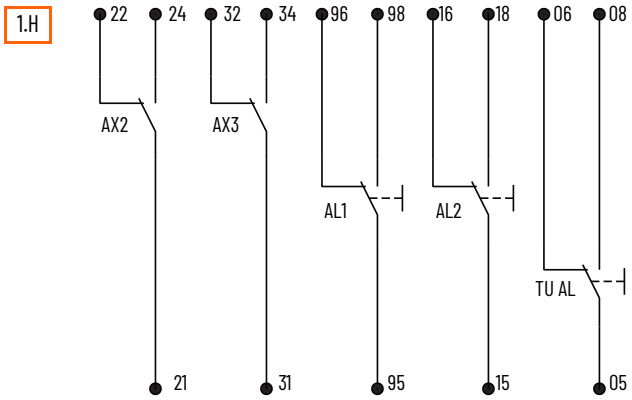

Figure 22 - Auxiliary Contacts (AX1/AX2)

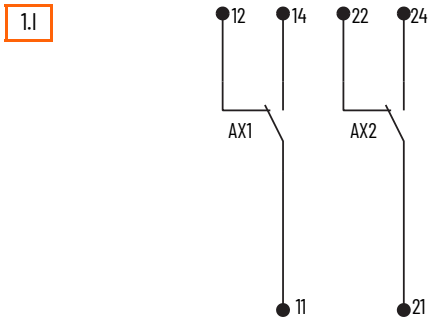

Figure 23 - Auxiliary/Alarm Contacts (AX1/AL1)

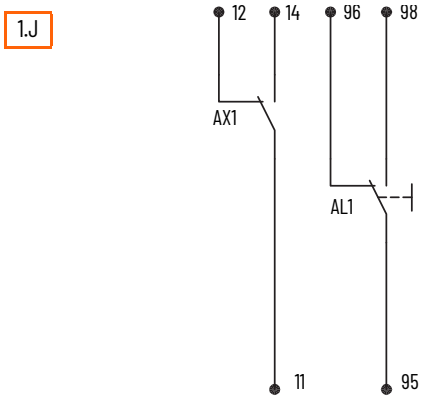

Figure 24 - Auxiliary Contacts (AX1/AX2/AX3/AX4)

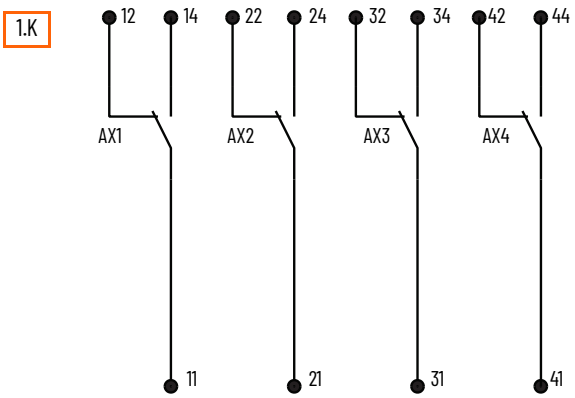

Figure 25 - Trip Unit Alarm Contact (AL1)

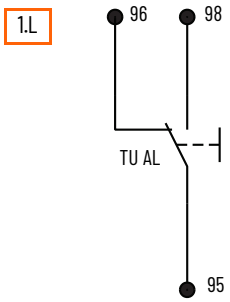

Auxiliary Contacts for Handles

Figure 26 - One Early Make Auxiliary Contact for Direct Operating Handle (140G-G, -H, -I, -J Devices)

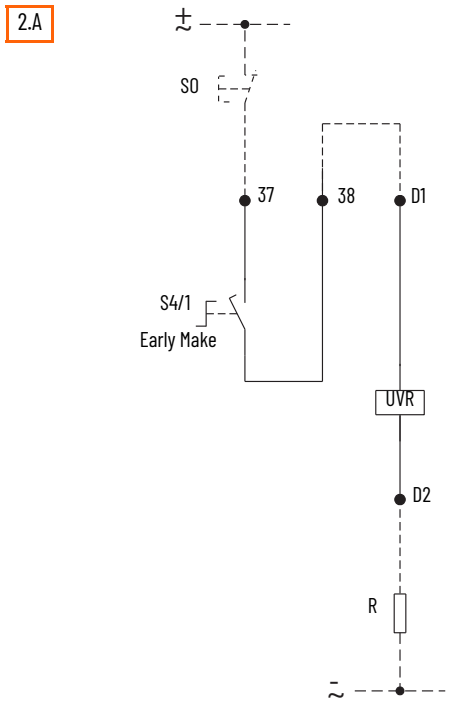

Figure 27 - Two Early Make Auxiliary Contacts for Direct Operating Handle (140G-G, -H, -I, -J Devices) or Rotary Handle (140G-K Devices)

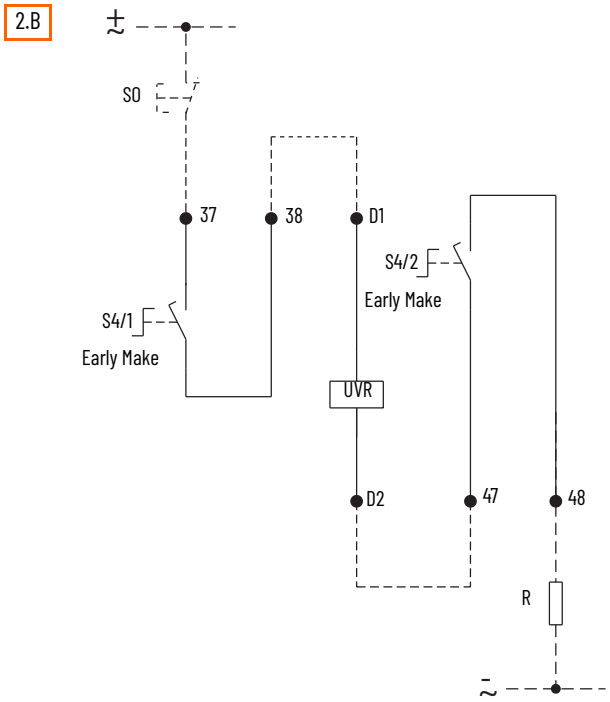

Figure 28 - One Early Break Auxiliary Contact for Rotary Operating Handle (140G-G, -H, -I, -J Devices)

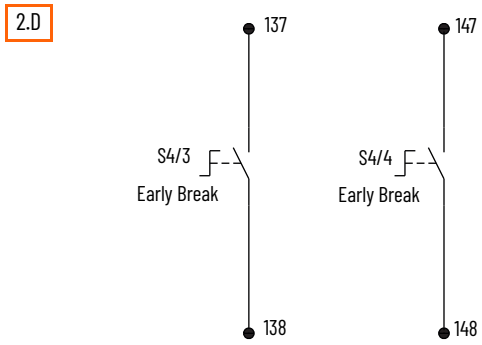

Ready-to-Close Auxiliary Contacts

Figure 29 - Ready-to-Close Auxiliary Contact (140G-NS Devices)

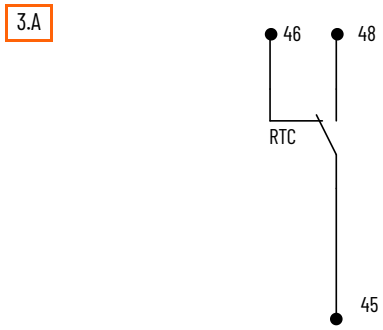

Spring Charged Auxiliary Contacts

Figure 30 - Auxiliary Contact for Signaling Springs Charged (140G-NS Devices)

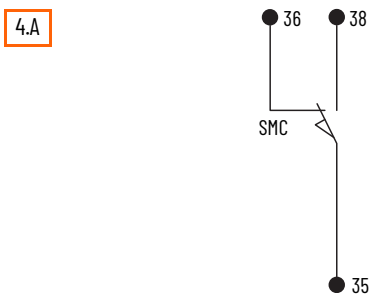

Protection/Control Accessories

Trip Reset Module

Figure 31 - Trip Reset Module (140G-NS Devices)

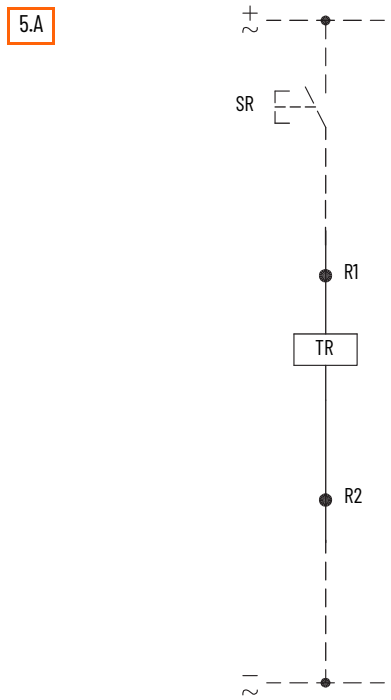

Shunt Trip Modules

Figure 32 - Shunt Trip Module (140G-G, -H, -I, -J Devices)

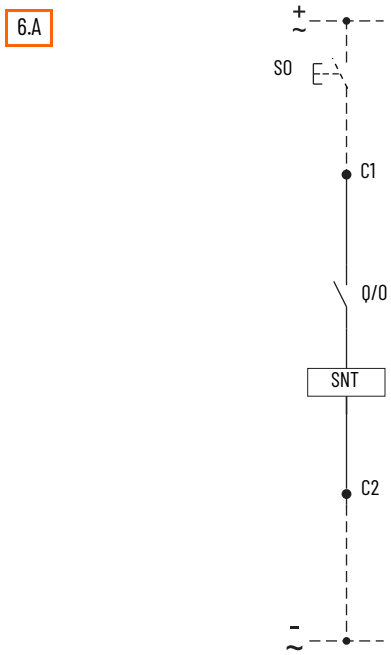

Figure 33 - Shunt Trip Module (140G-N, -NS, -R Devices)

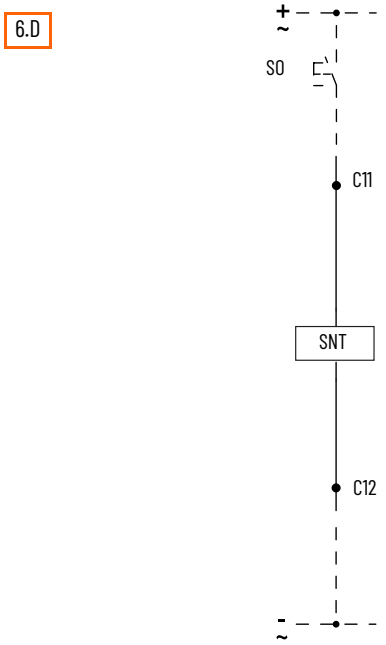

Figure 34 - 2nd Shunt Trip (140G-N, -NS Devices)

6.E

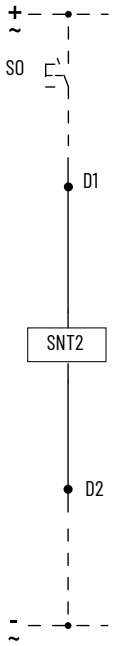

Shunt Close Module

Figure 35 - Shunt Close Module (140G-NS Devices)

7.A

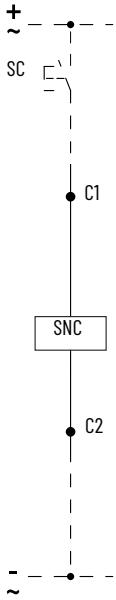

Undervoltage Release Modules

Figure 36 - Undervoltage Release Module (140G-G, -H, -I, -J, -N, -NS Devices)

8.A

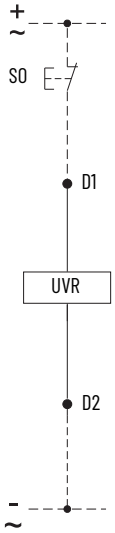

Figure 37 - Undervoltage Release Module with E-Stop (140G-G, -H, -I, -J, -N, -NS Devices)

8.B

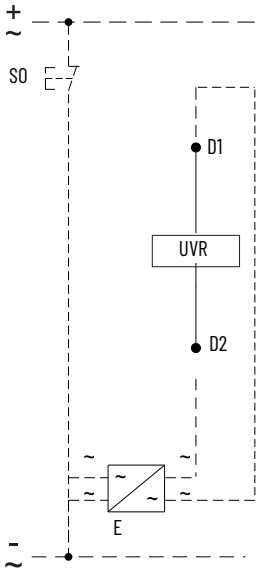

Figure 38 - Undervoltage Release Module with Resistor (140G-K, -M Devices)

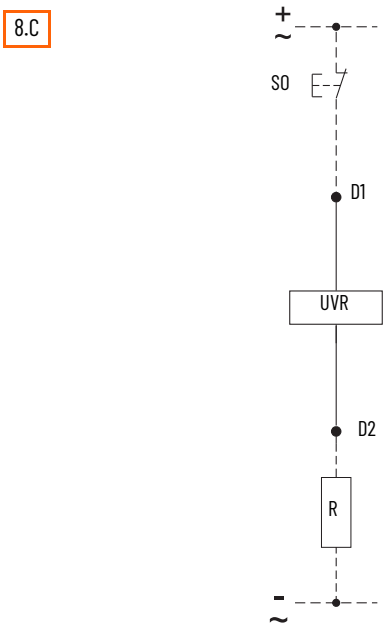

IEC Residual Current Release Modules

Figure 39 - Earth Leakage Protector (140G-G, -H, -I, -J Devices)

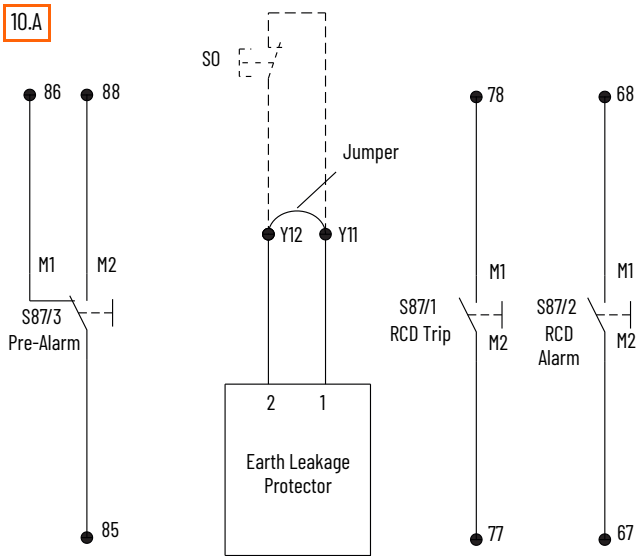

Figure 40 - Earth Leakage Protector (140G-K Devices)

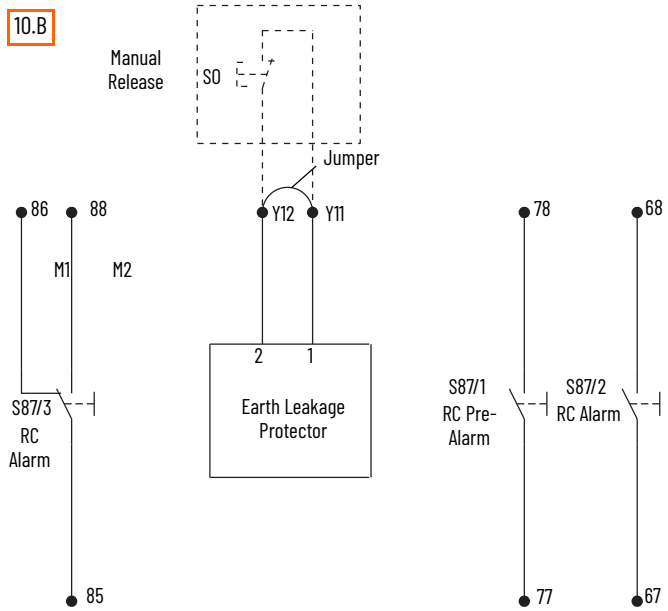

Neutral Current Transformer Modules

Figure 41 - Current Sensor for External Neutral Conductor (140G-N, -NS, -R Devices)

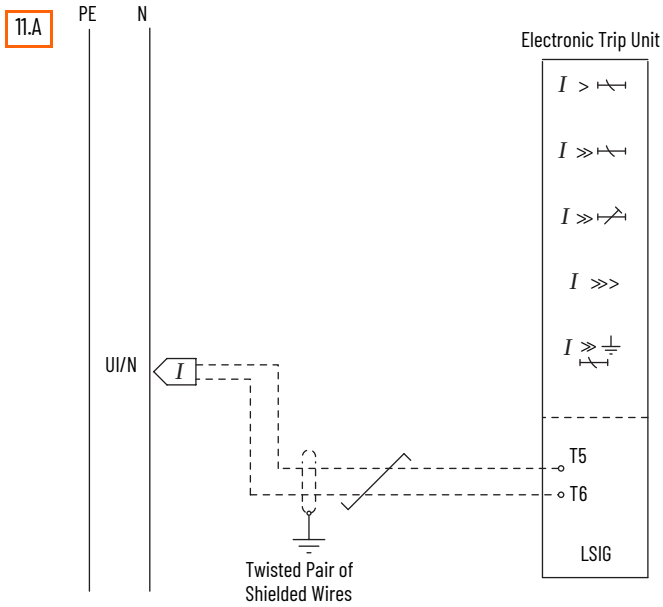

Figure 42 - Current Sensor for External Neutral Conductor (140G-H, -J Devices)

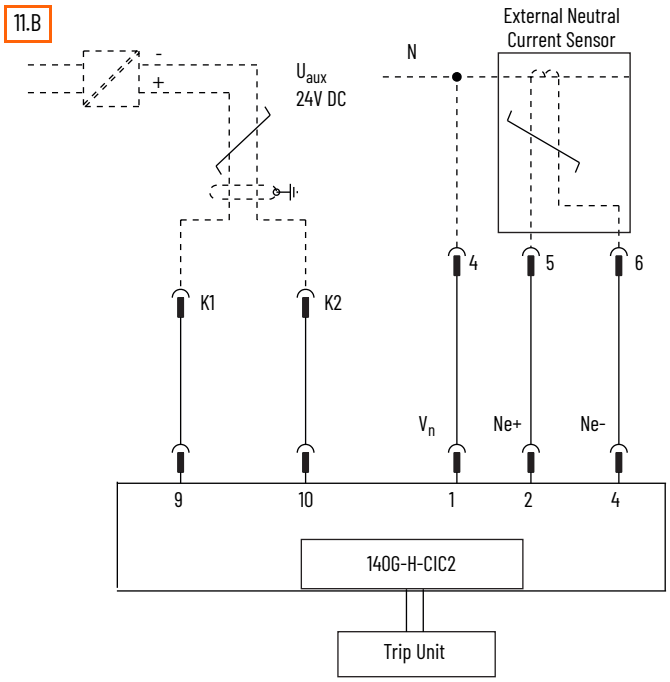

Maintenance Mode Accessories

Figure 43 - LSIG-MM Trip Unit Connectors (140G-K, -M Devices)

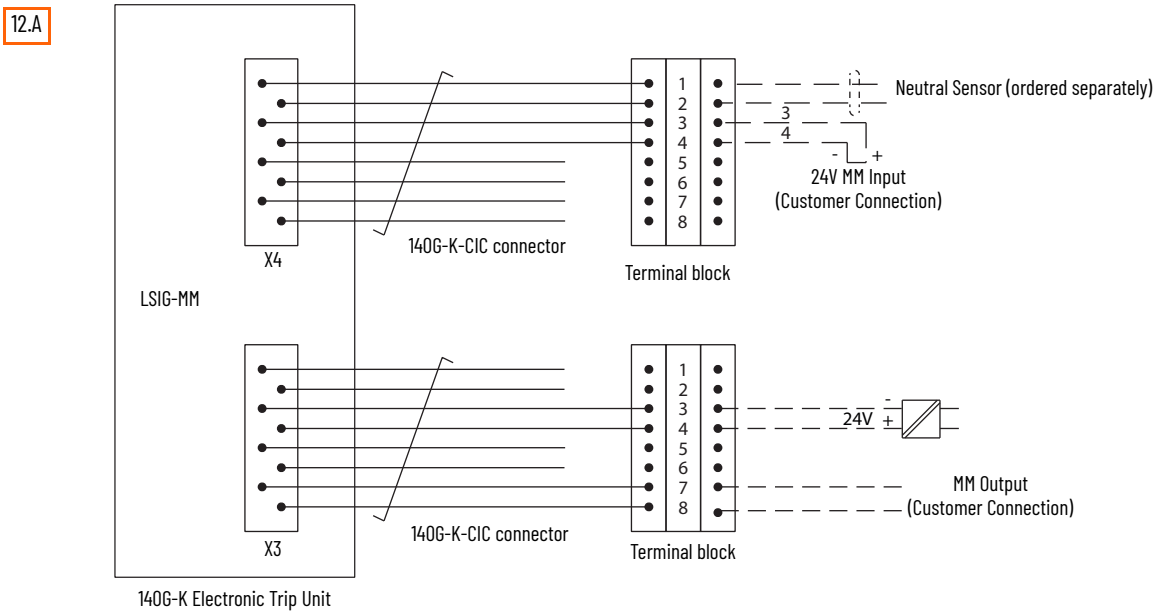

Figure 44 - LSIG-MM Maintenance Mode Signal Contacts (140G-K, -M Devices)

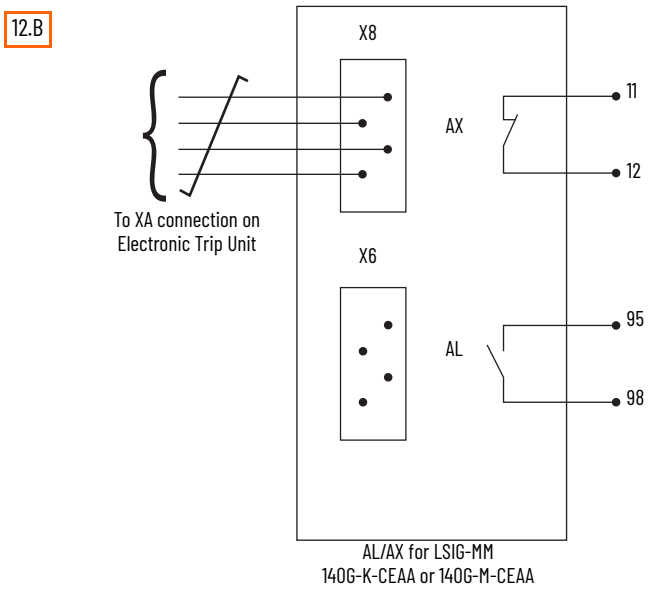

Operators

Motor Operators

Figure 45 - Motor Operator for 140G-G, -I Devices

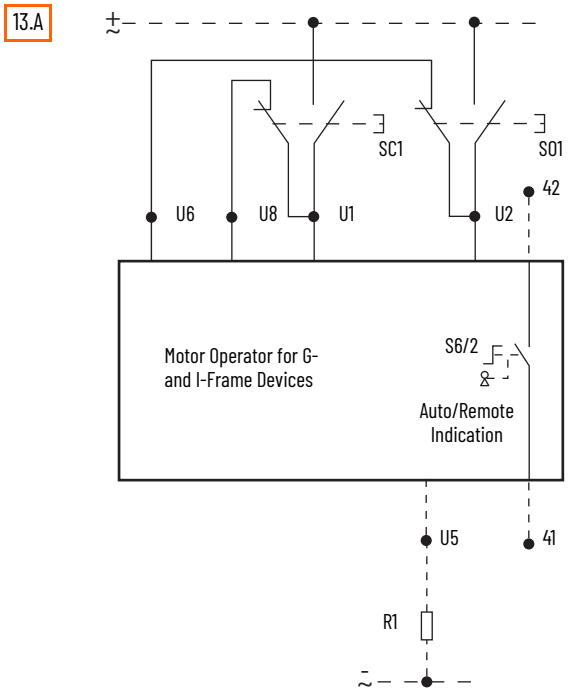

Figure 46 - Stored Energy Operating Mechanism for 140G-K, -M Devices

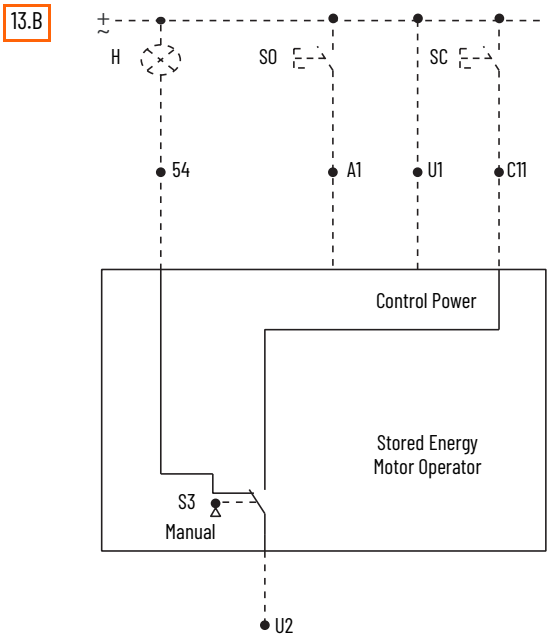

Figure 47 - Stored Energy Operating Mechanism for 140G-H, -J Devices

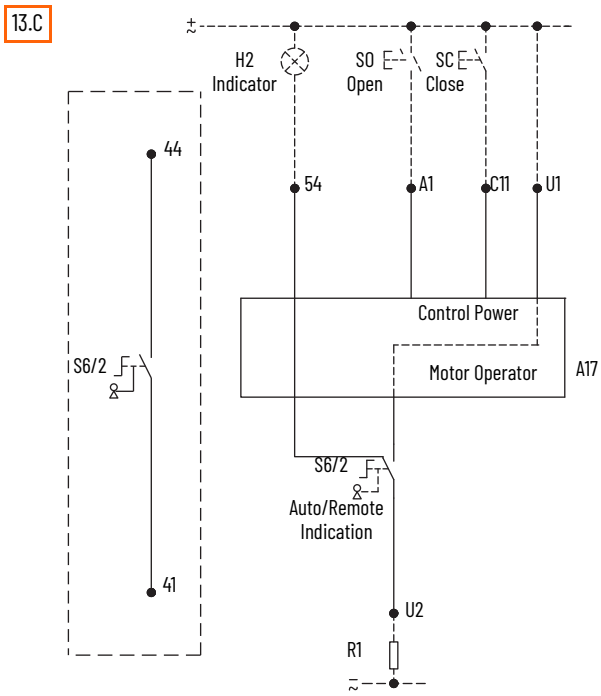

Figure 48 - Stored Energy Operating Mechanism for 140G-H, -J Devices With Communications Module

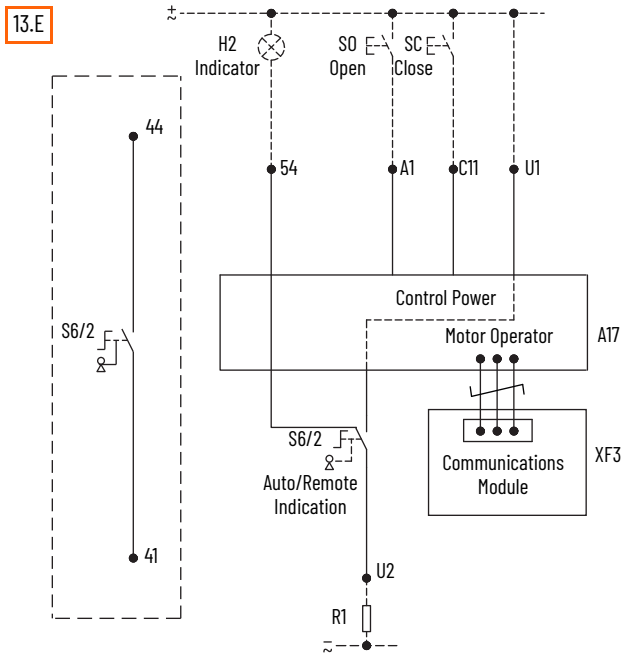

Spring Charging Motor

Figure 49 - Spring Charging Motor for 140G-NS, -R Devices

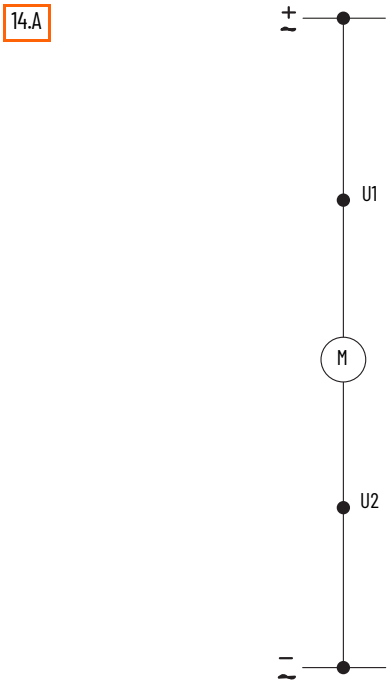

Using Trip and Let-through Curves

A trip curve is a representation of how a circuit breaker reacts to overcurrents and short-circuit currents. The curve is determined by a specific set of test conditions, so you should use the curve as a guideline with the documented tolerances; real-world deviations from the test criteria may alter the individual results as compared to the curve.

The curves for thermal magnetic trip units show two protections; the curves for electronic trio units will show up to four protections on the same graph. Some trip curve graphs also display a side graph that shows the device self-protections interacting with the circuit protections. To more quickly respond at certain current conditions, slower protections may be disabled in favor of faster protections. The bottom axis of each graph displays current as a multiple of the nominal current. Each chart is valid for multiple rated currents.

A let-through curve is a representation of the peak current and total let-through energy a breaker experiences while interrupting the current. This energy affects downstream devices. Each graph shows the available short-circuit current as root mean square (rms) values, making each chart valid for both AC and DC.

Trip Curve for a Thermal-magnetic MCCB

The most commonly selected form of thermal protection is the bimetallic version. This works similarly to a traditional overload relay in which a bimetallic element is heated, causing a deflection, which then exerts pressure on a trip bar and causes the circuit breaker to trip.

Figure 50 - Example Bimetallic Trip Curve

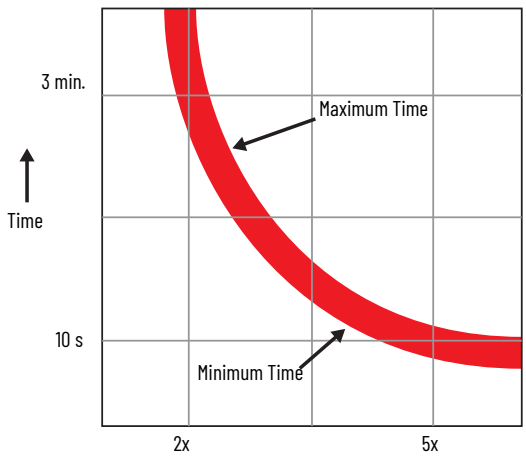

Using the bimetallic model, we can provide a thermal protection curve as shown here.

The outer edges of the line reflect the minimum and maximum times. The area between is the trip setting range.

Figure 51 - Example Thermal-magnetic MCCB Trip Curve

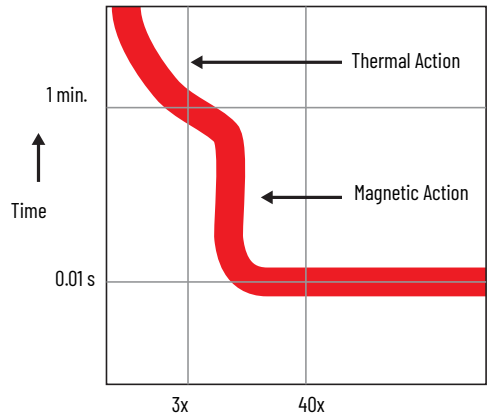

Combining the short-circuit and overcurrent protection provides us with a protection curve that looks like this.

Trip Curve for an Electronic MCCB

An alternative to using fixed-thermal protection is to use electronic overcurrent protection, which electronically replicates the function of the mechanical overcurrent device.

One of the benefits of using electronic trip units is their ability to tailor the tripping characteristics of the circuit breaker for the application.

The electronic trip unit has the ability to provide advanced protection in the form of additional trip functionality such as adjustable:

- Long Time – Allows the long time between 1.05 and ~1.3 x the thermal rating to be delayed, similar to how an adjustable relay changes classes
- Short Time – Adjustable short time between thermal and short-circuit
- Instantaneous Trip – Adjustable instantaneous short-circuit trip time
- Ground Fault – Adjustable time and value of ground fault tripping

Figure 52 shows an example trip curve for electronic MCCBs.

Figure 52 - Example Electronic MCCB Trip Curve

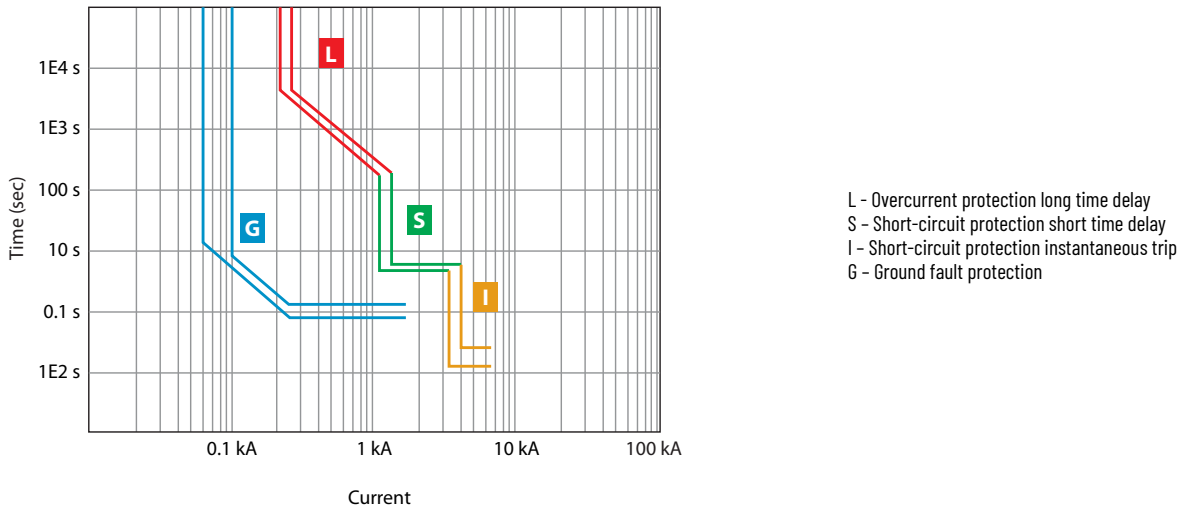

Electronic trip units are available in a variety of trip settings. The most common combinations are LSI, LSIG, and LIU trip settings; therefore a wide variety of options exist for customizing the protection the circuit breaker provides within the control panel.

Trip and Let-through Curve Index

Table 243 through Table 248 list the individual curves that are available for Bulletin 140G MCCBs and 140MG MCPs and MPCBs. You can find the most up-to-date versions of these publications by clicking the links in the tables or by searching by the publication number at rok.auto/literature. Figure 53 through Figure 122 show the trip curves that are listed in the tables, current as of the date of publication.

Table 243 - Bulletin 140G Thermal-magnetic Molded Case Circuit Breakers Time-current Curves

Frame Size	Voltage Rating	Current Rating [A]	Figure No.	Publication No.
G-Frame	600Y/347V AC	15...30	Figure 53	10000861758
		15...32	Figure 54	10001109141
		35...50	Figure 55	10000861759
		60...100	Figure 56	10000861760
		125	Figure 57	10000861764
		160	Figure 58	10001109143
H-Frame	600V AC	15...30	Figure 59	10000861765
		32	Figure 60	10001109145
		35...50	Figure 61	10000861766
		60...70	Figure 62	10000861767
		80...100	Figure 63	10000861768
		110...125	Figure 64	10000861773
		160	Figure 65	10001109146
I-Frame	600Y/347V AC	60...100	Figure 66	10000861774
		110...150	Figure 67	10000861775
		160...225	Figure 68	10000888729
J-Frame	600V AC	25...50	Figure 69	10000861777
		60...70	Figure 70	10000861779
		80...100	Figure 71	10000861780
		110...150	Figure 72	10000861781
		160...225	Figure 73	10000861782
		250	Figure 74	10000861783
K-Frame	600V AC	300, 400	Figure 75	10000861784
M-Frame	600V AC	600	Figure 76	10000861787
		630	Figure 77	10000890738
		800	Figure 78	10000861789

Table 244 - Bulletin 140G Electronic Molded Case Circuit Breakers Time-current and Ground Fault Protection Curves

Frame Size	Voltage Rating	Frequency [Hz]	Current Rating [A]	Protection Type	Figure No.	Publication No.
H-Frame	600V AC	50/60	25, 60, 100, 125	LSI	Figure 79	10000861791
				G	Figure 80	10000861792
J-Frame	600V AC	50/60	40, 60, 100, 150, 250	LSI	Figure 81	10000861796
				G	Figure 82	10000861798
K-Frame	600V AC	50/60	300, 400	LSI	Figure 83	10000861808
				G	Figure 84	10000861827
M-Frame	600V AC	50/60	600	LSI	Figure 85	10000861837
			600, 800	G	Figure 86	10000861838
N, NS-Frame	600V AC	50/60	1200	LSI	Figure 87	10000861840
				G	Figure 88	10000861841
			400, 600, 800, 1000, 1200, 1250	LSIG-MM	Figure 89, Figure 90	10000861842
R-Frame	600V AC	50/60	2000, 2500, 3000	LSIG	Figure 91, Figure 92	10000861848

Table 245 - Bulletin 140G Molded Case Circuit Breakers Let-through Curves

Voltage Rating	Curve Type	Frame Size	Figure No.	Publication No.
240V AC	Let-through Energy	N, M, J, H	Figure 93	10003753275
	Peak Let-through Current	N, M, J, H	Figure 94	10003753299
415V AC	Let-through Energy	G, H, I, J, K, M, N	Figure 95	10003751235
	Peak Let-through Current	G, H, I, J, K, M, N	Figure 96	10003751239
480V AC	Let-through Energy	G, H, J, K, M, N, R	Figure 97	10002330971
	Peak Let-through Current		Figure 98	10002330977
500V AC	Let-through Energy	G, H, I, J, K, M, N	Figure 99	10003753276
	Peak Let-through Current	G, H, I, J, K, M, N	Figure 100	10003753279
600V AC	Let-through Energy	G, H, J, K, M, N, R	Figure 101	10002330972
	Peak Let-through Current		Figure 102	10002330979
690V AC	Let-through Energy	G, H, I, J, K, M, N, R	Figure 103	10003751214
	Peak Let-through Current		Figure 104	10003751227

Table 246 - Bulletin 140G Current-limiting Molded Case Circuit Breakers Let-through Curves

Voltage Rating	Interrupt Rating [kA]	Curve Type	Frame Size	Figure No.	Publication No.
480V AC	65	Let-through Energy	HC, JC, KC	Figure 105	10002330964
		Peak Let-through Current		Figure 106	10002330950
	100	Let-through Energy		Figure 107	10002330960
		Peak Let-through Current		Figure 108	10002330884
600V AC	65	Let-through Energy		Figure 109	10002330970
		Peak Let-through Current		Figure 110	10002330957
	100	Let-through Energy		Figure 111	10002330969
		Peak Let-through Current		Figure 112	10002330955

Table 247 - Bulletin 140MG Motor Circuit Protectors Time-current Curves

Frame Size	Voltage Rating	Current Rating [A]	Figure No.	Publication No.
G-Frame	600Y/347V AC	3...125	Figure 113	10000861722
H-Frame	600V AC	3...100	Figure 114	10000861723
		125	Figure 115	10000861724
I-Frame	600Y/347V AC	100...150	Figure 116	10000861726
J-Frame	600V AC	150...200	Figure 117	10000861727
K-Frame	600V AC	300, 400	Figure 118	10000861755
M-Frame	600V AC	600, 800	Figure 119	10000861756
N-Frame	600V AC	1200	Figure 120	10000861757

Table 248 - Bulletin 140MG Motor Protection Circuit Breakers Time-current Curves

Frame Size	Voltage Rating	Current Rating [A]	Figure No.	Publication No.
H-Frame	600V AC	25, 60, 100	Figure 121	10000861725
J-Frame	600V AC	40, 60, 100, 150	Figure 122	10000861754

Bulletin 140G Thermal-magnetic MCCB Trip Curves

Figure 53 - 140G-G Time-current Curve

- Maximum voltage: 600Y/347V AC
- Maximum current: 15...30 A
- Instantaneous (magnetic) trip tolerance: -20%/+30%

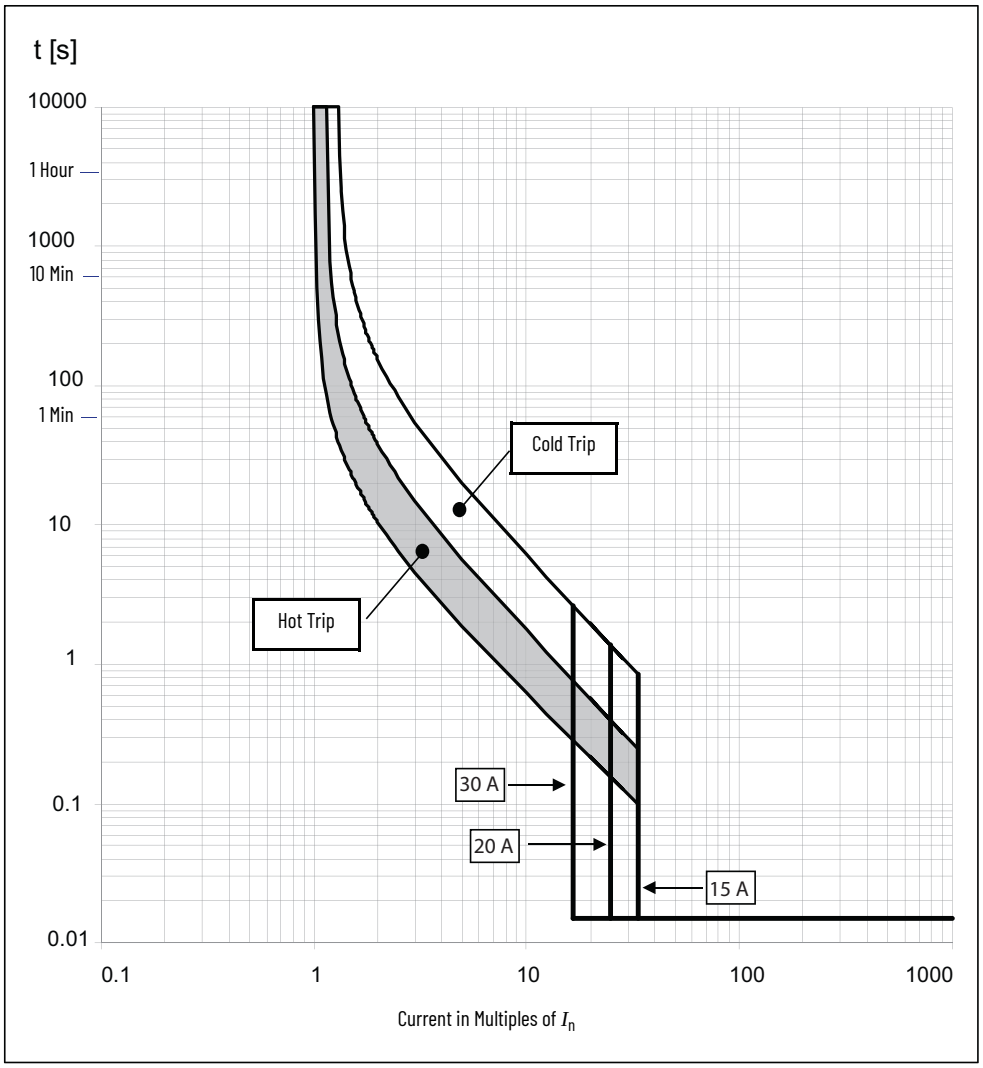

Table 249 - Current Ratings

Rated Current I_n [A]	Magnetic Trip I_m [A]
15...30	500

Figure 54 - 140G-G Time-current Curve

- Maximum voltage: 600Y/347V AC
- Maximum current: 32 A
- Instantaneous (magnetic) trip tolerance: -20%/+30%

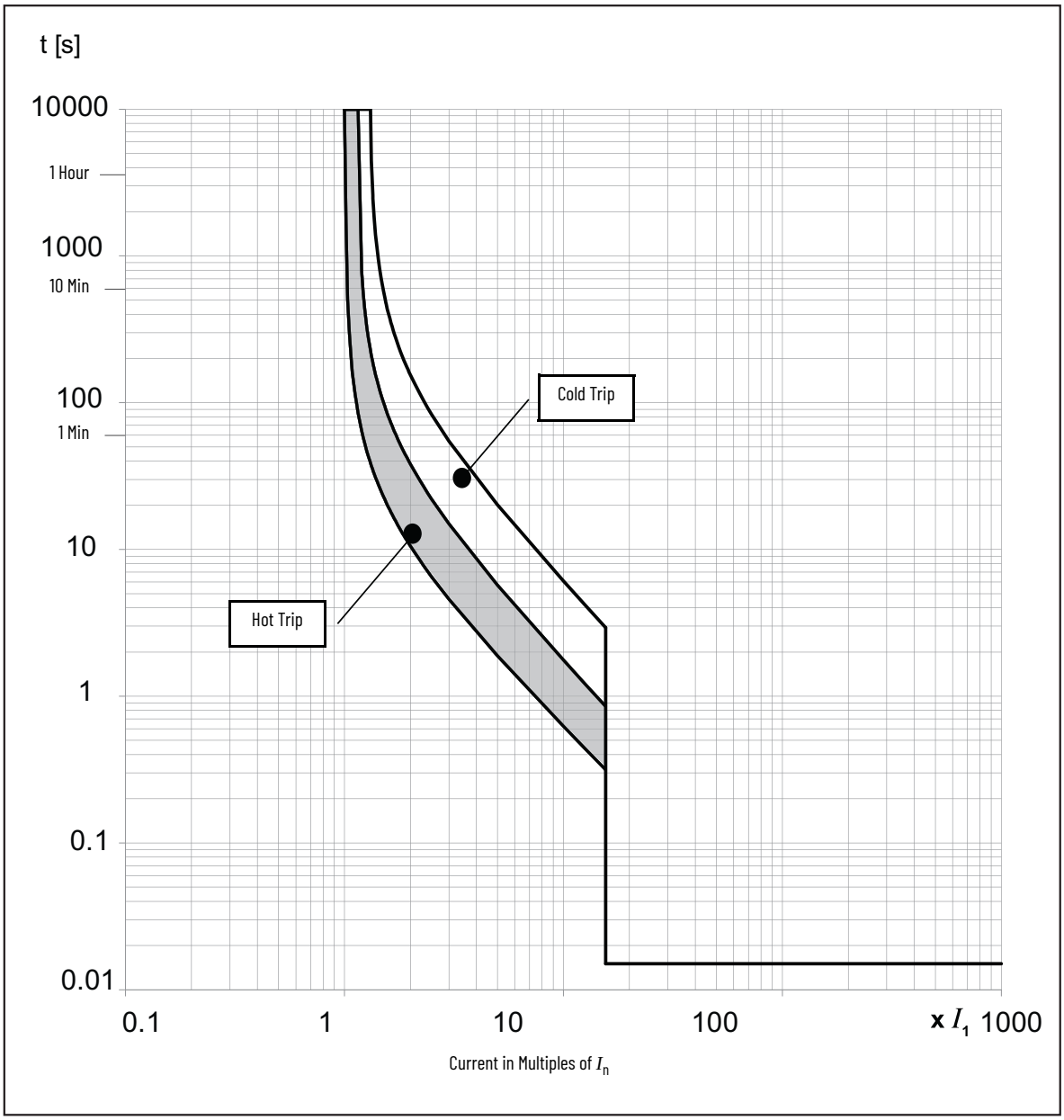

Figure 55 - 140G-G Time-current Curve

- Maximum voltage: 600Y/347V AC
- Maximum current: 35...50 A
- Instantaneous (magnetic) trip tolerance: -20%/+30%

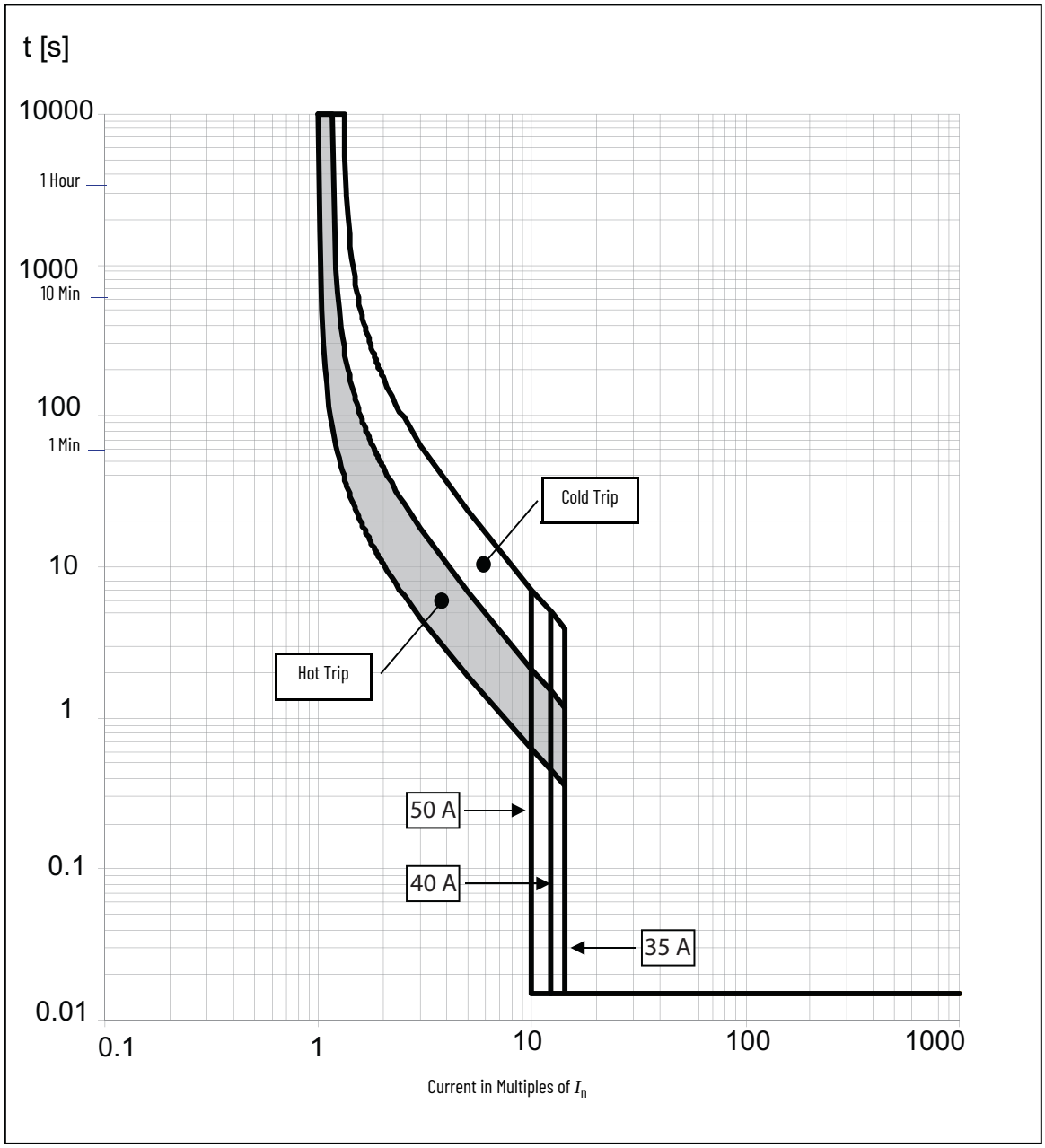

Table 250 - Current Ratings

Rated Current I_n [A]	Magnetic Trip I_m [A]
35...50	500

Figure 56 - 140G-G Time-current Curve

- Maximum voltage: 600Y/347V AC
- Maximum current: 60...100 A
- Instantaneous (magnetic) trip tolerance: -20%/+30%

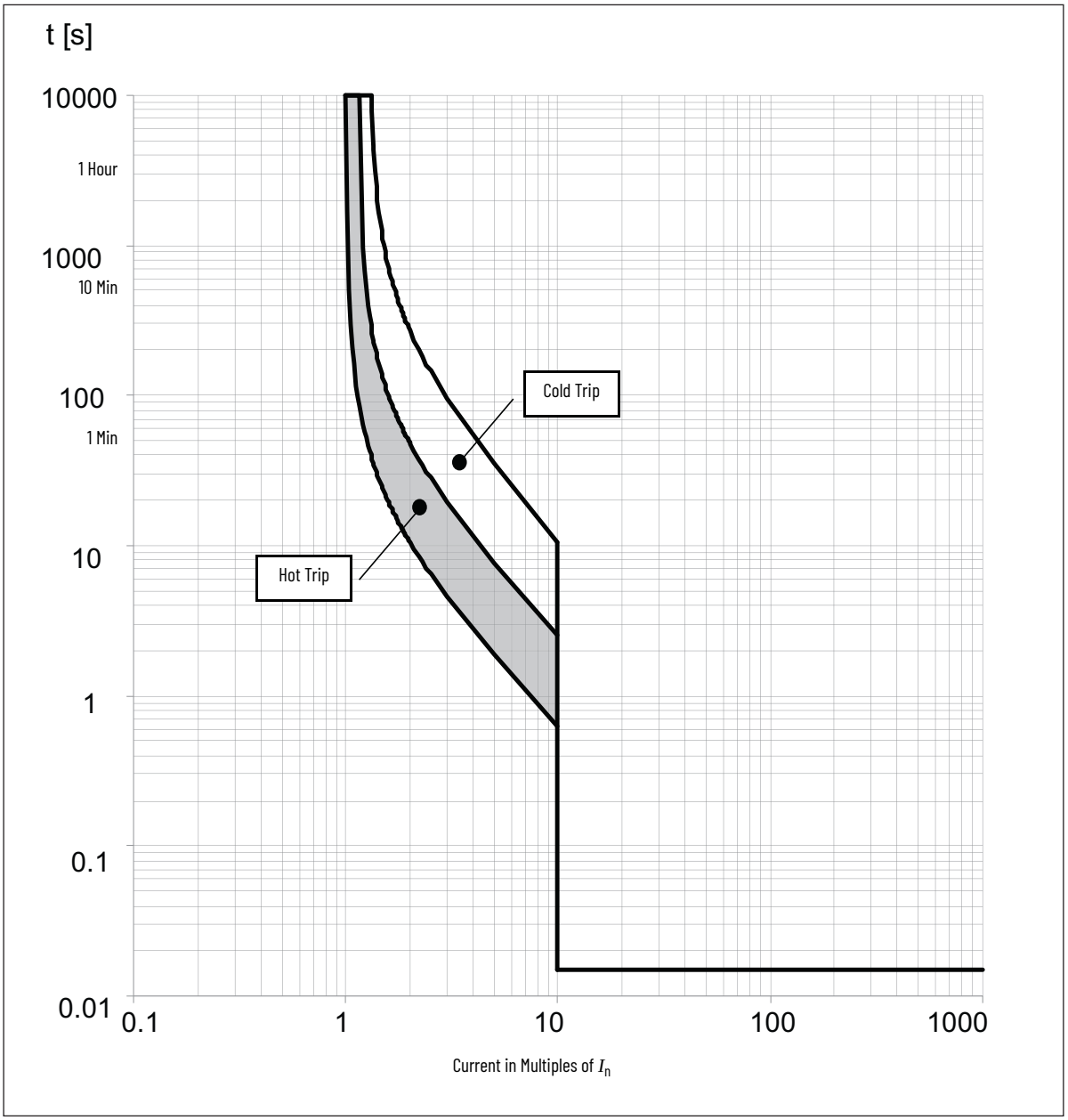

Table 251 - Current Ratings

Rated Current I_n [A]	Magnetic Trip I_m [A]
60	600
63	630
70	700
80	800
90	900
100	1000

Figure 57 - 140G-G Time-current Curve

- Maximum voltage: 600Y/347V AC
- Maximum current: 125 A
- Instantaneous (magnetic) trip tolerance: -20%/+30%

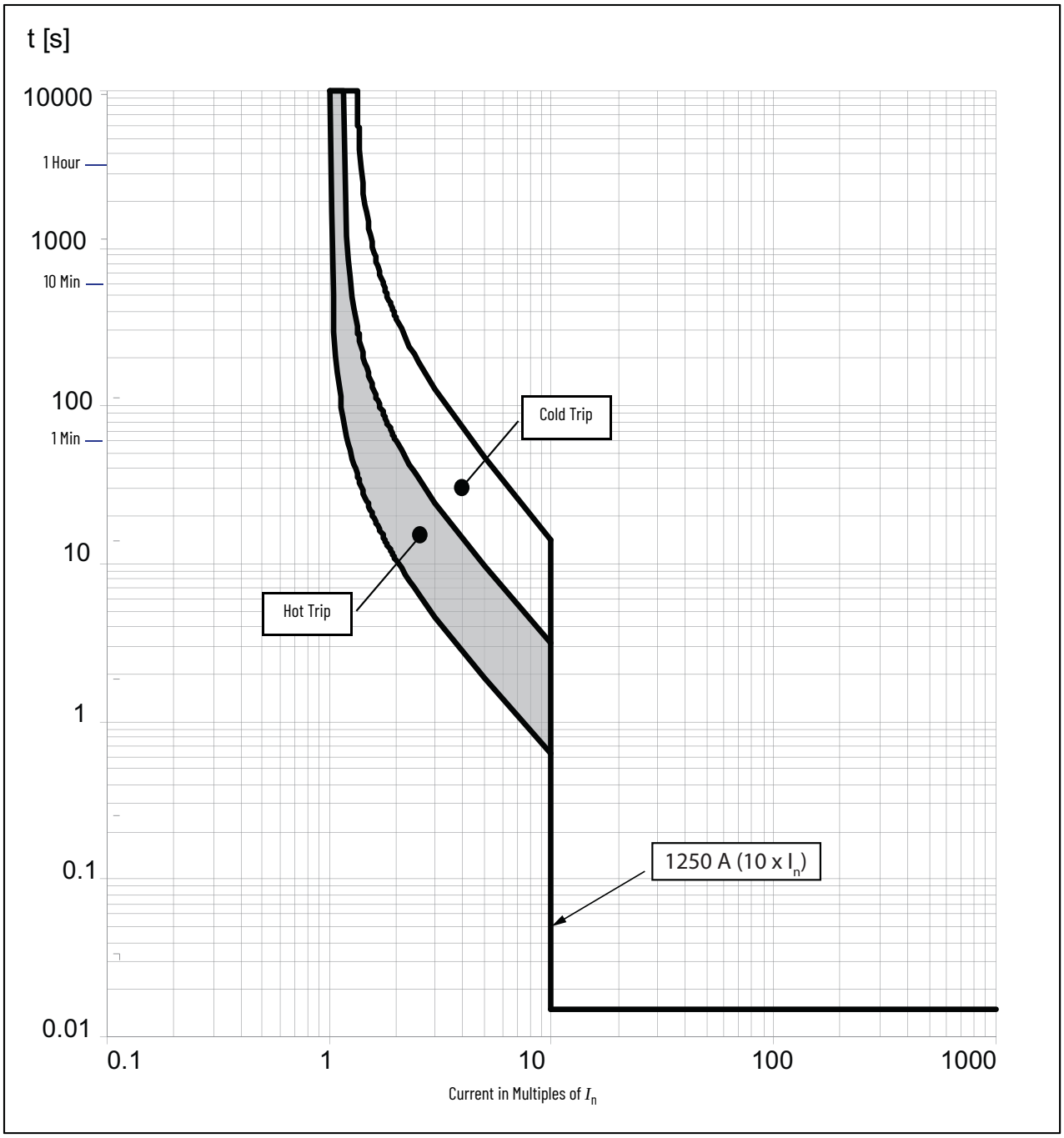

Figure 58 - 140G-G Time-current Curve

- Maximum voltage: 600Y/347V AC
- Maximum current: 160 A
- Instantaneous (magnetic) trip tolerance: -20%/+30%

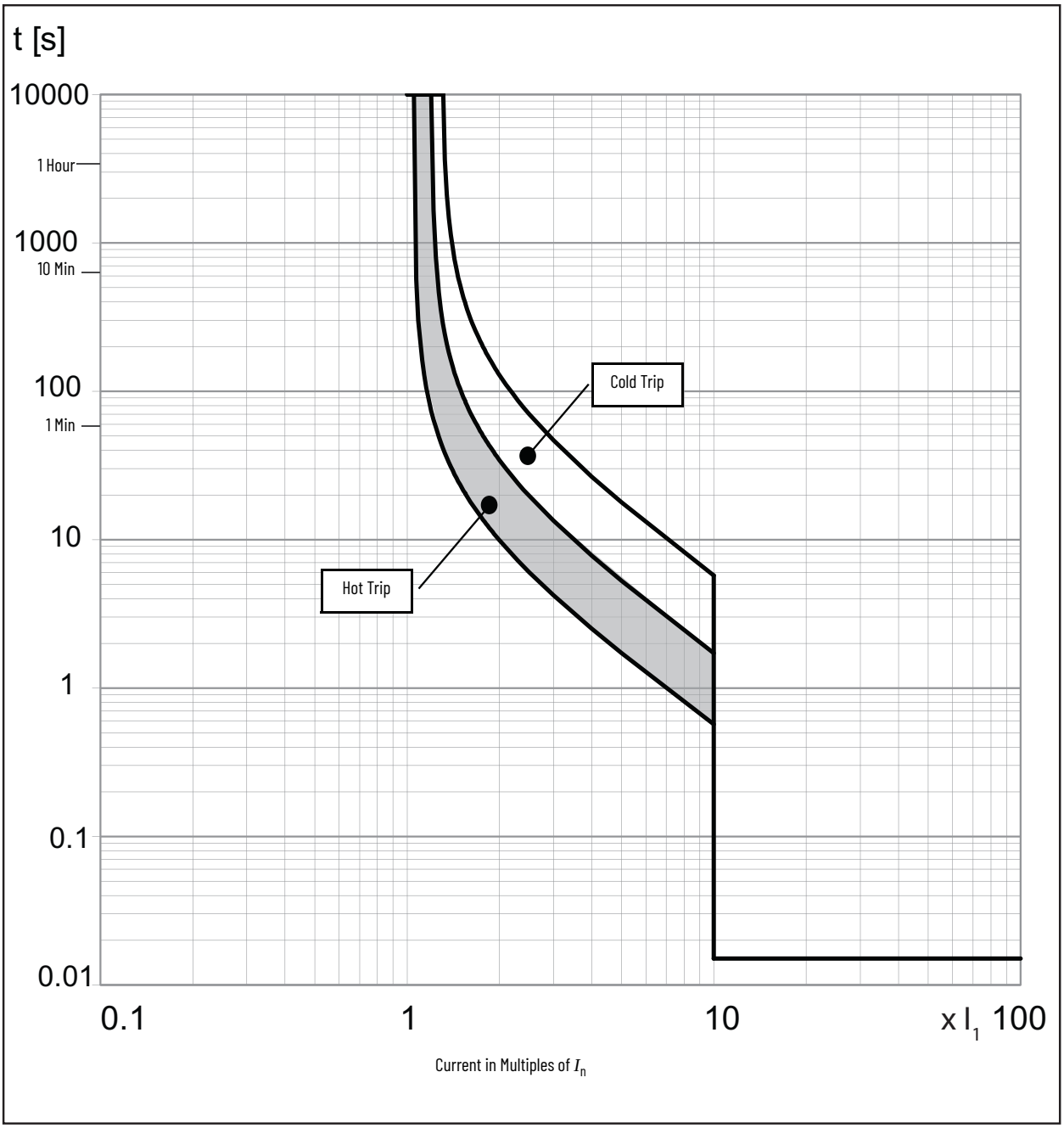

Figure 59 - 140G-H Time-current Curve

- Maximum voltage: 600V AC
- Maximum current: 15...30 A
- Instantaneous (magnetic) trip tolerance: -20%/+30%

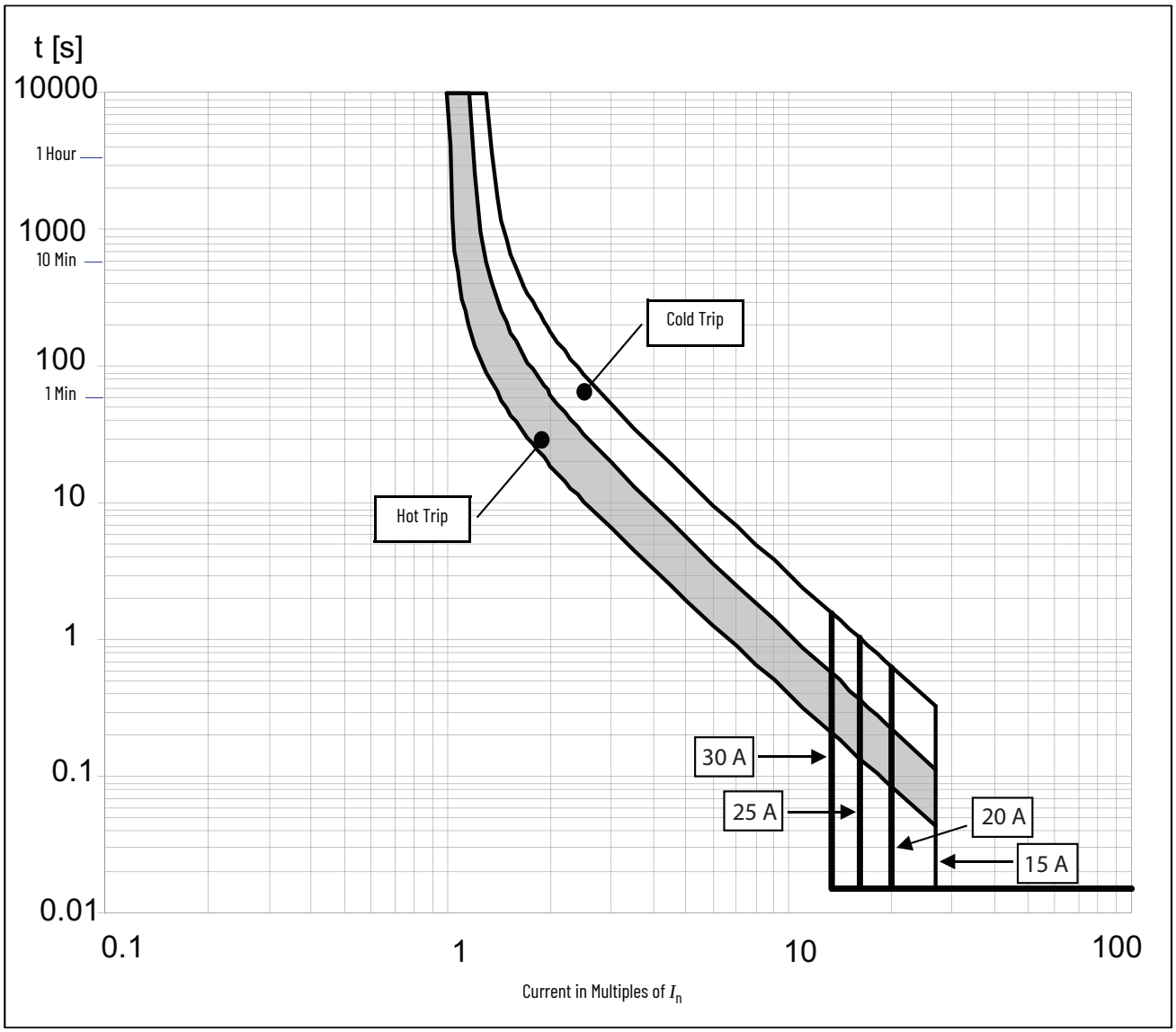

Table 252 - Current Ratings

Rated Current I_n [A]	Magnetic Trip I_m [A]
15...30	400

Figure 60 - 140G-H Time-current Curve

- Maximum current: 32 A
- Instantaneous (magnetic) trip: 400 A
- Instantaneous (magnetic) trip tolerance: -20%/+30%

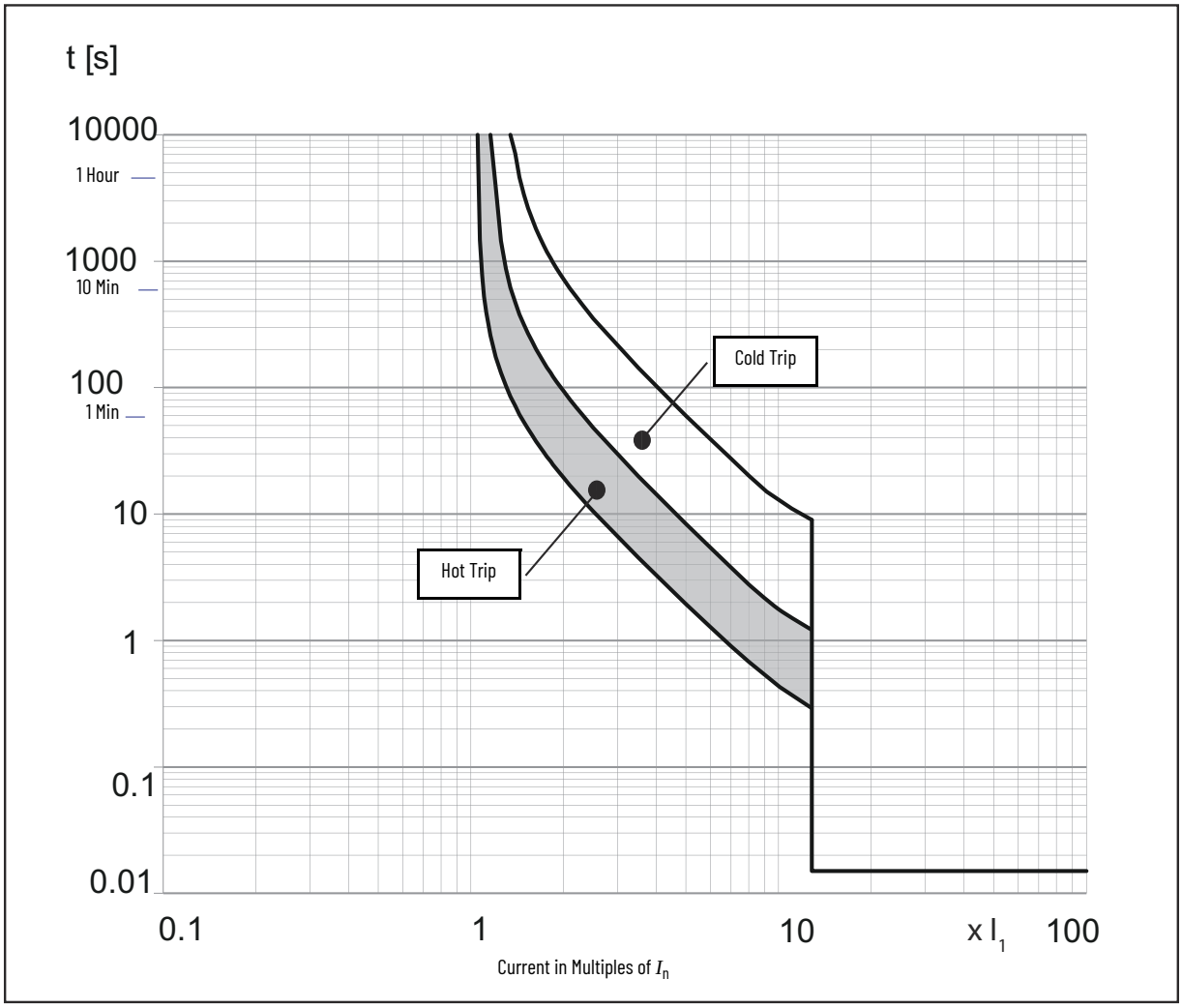

Figure 61 - 140G-H Time-current Curve

- Maximum voltage: 600V AC
- Maximum current: 35...50 A
- Instantaneous (magnetic) trip tolerance: -20%/+30%

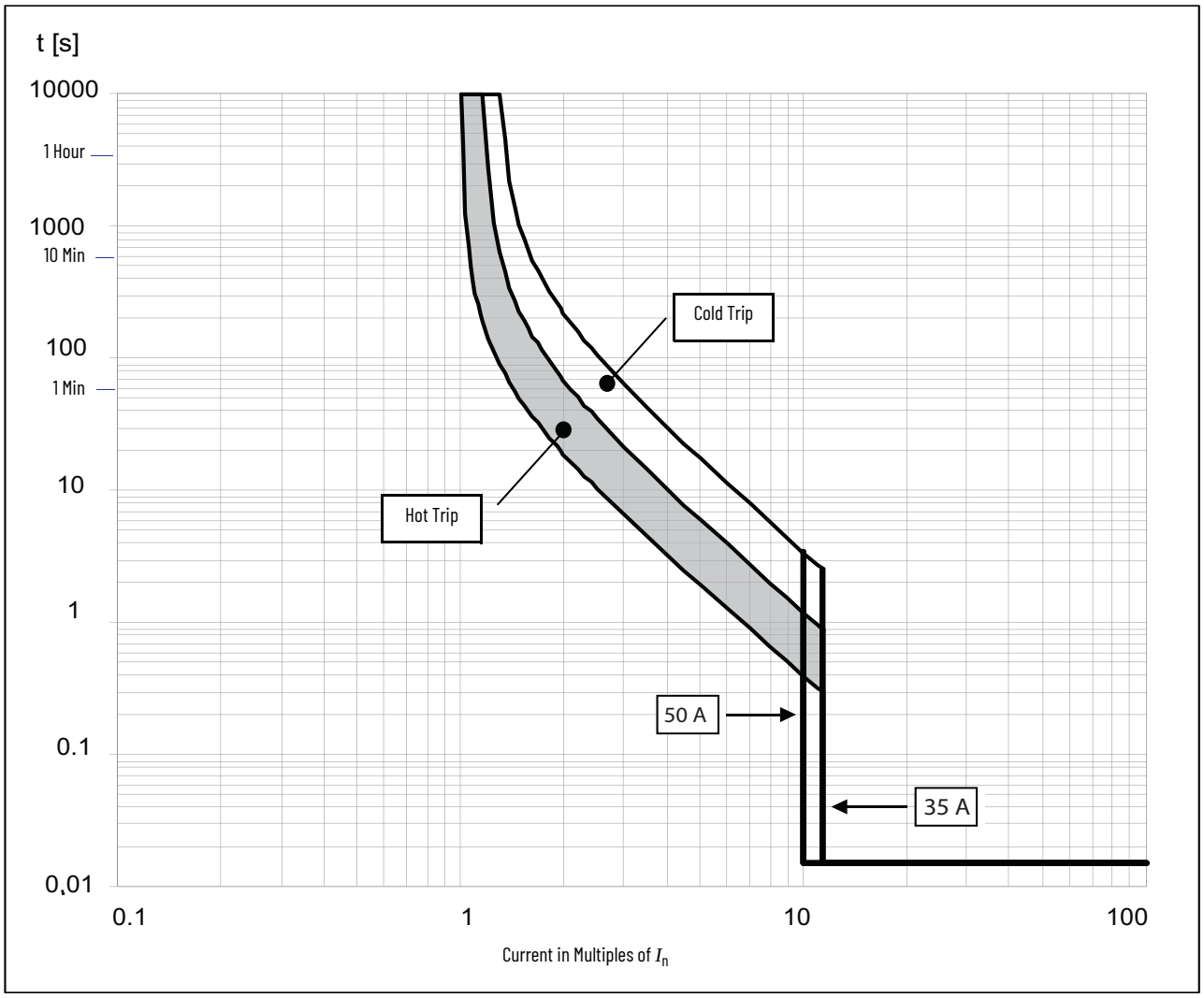

Table 253 - Current Ratings

Rated Current I_n [A]	Magnetic Trip I_m [A]
35	400
40	400
50	500

Figure 62 - 140G-H Time-current Curve

- Maximum voltage: 600V AC
- Maximum current: 60...70 A
- Instantaneous (magnetic) trip tolerance: -20%/+30%

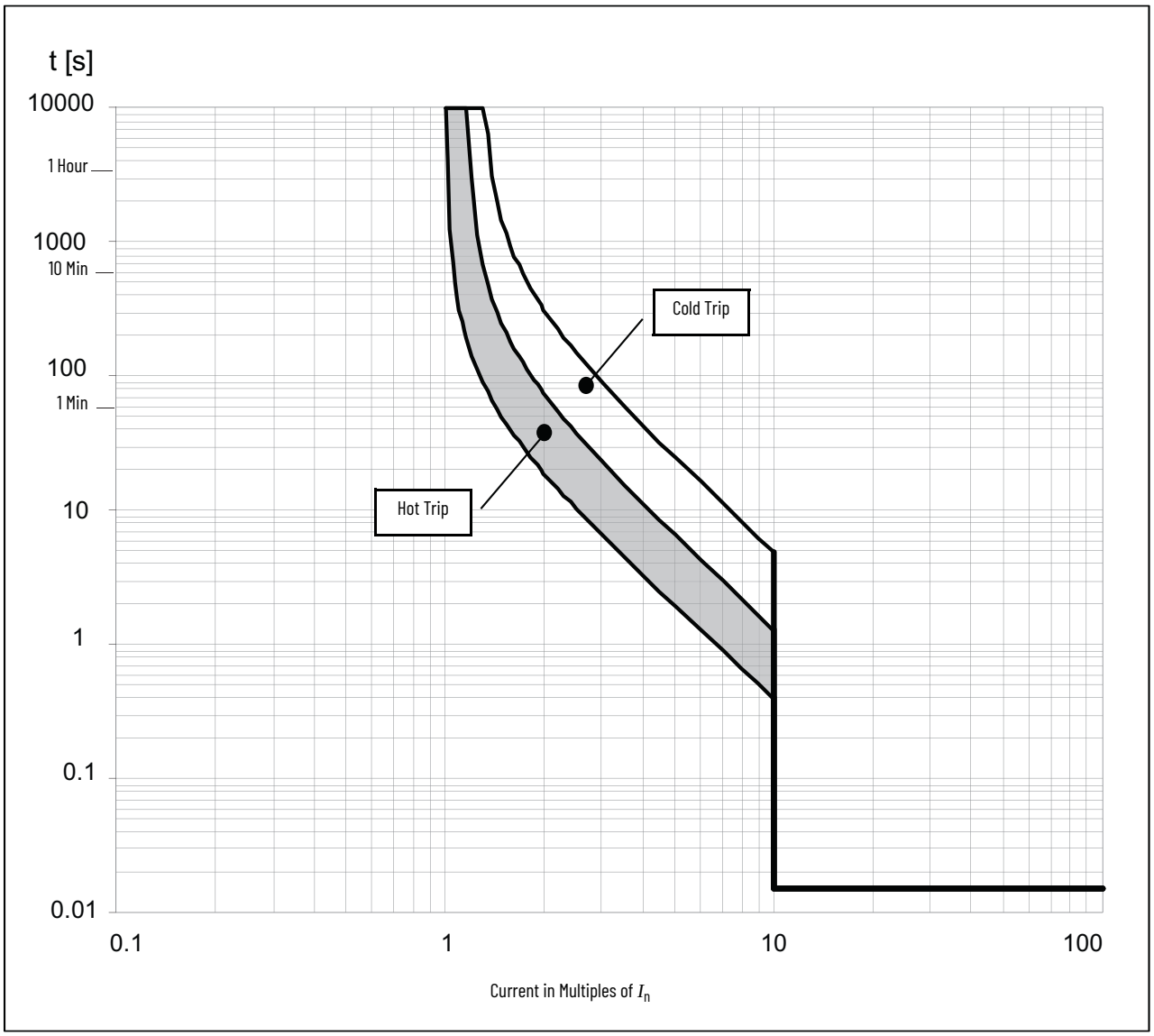

Table 254 - Current Ratings

Rated Current I_n [A]	Magnetic Trip I_m [A]
60	600
63	630
70	700

Figure 63 - 140G-H Time-current Curve

- Maximum voltage: 600V AC
- Maximum current: 80...100 A
- Instantaneous (magnetic) trip tolerance: -20%/+30%

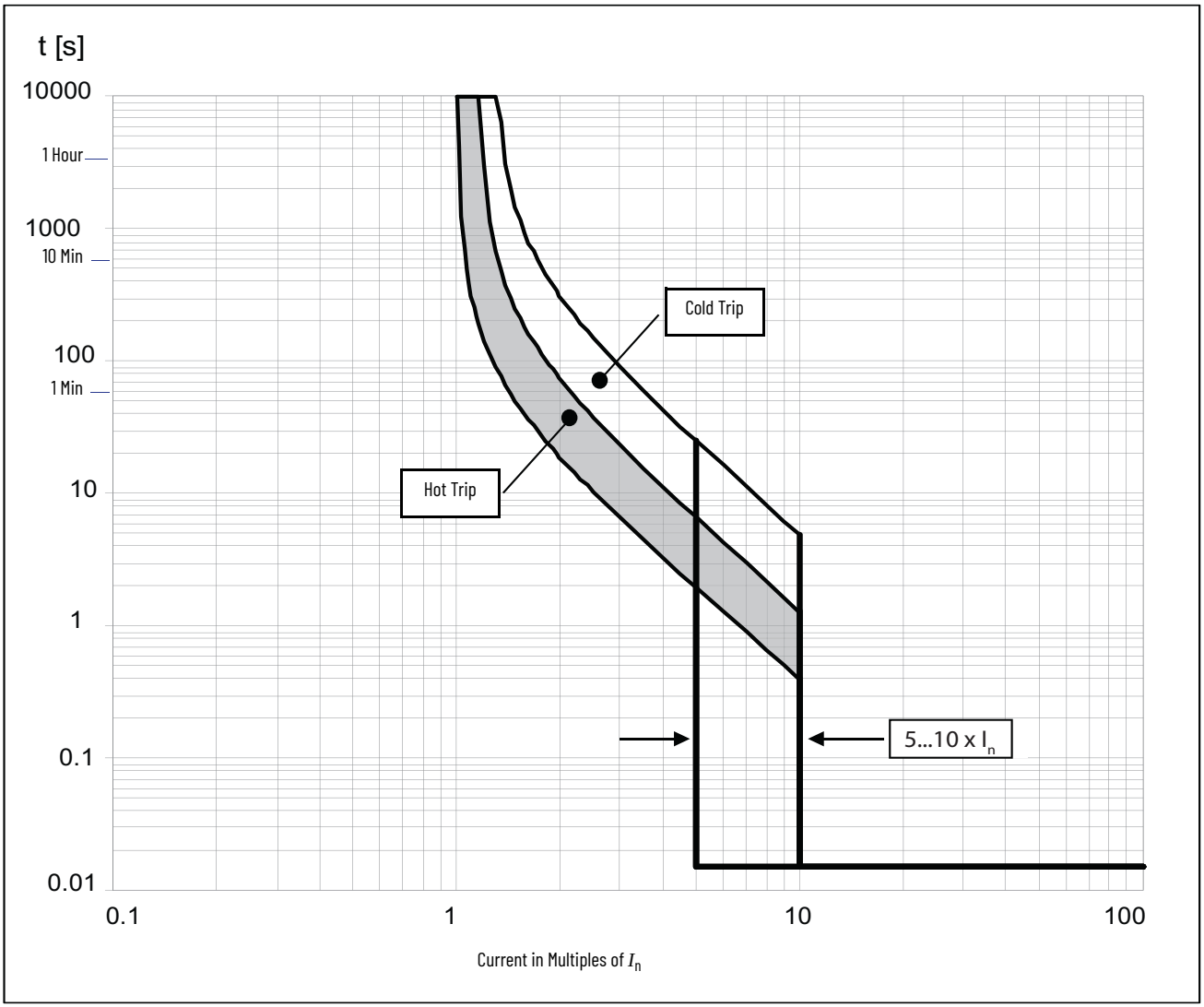

Figure 64 - 140G-H Time-current Curve

- Maximum voltage: 600V AC
- Maximum current: 110...125 A
- Instantaneous (magnetic) trip tolerance: -20%/+30%

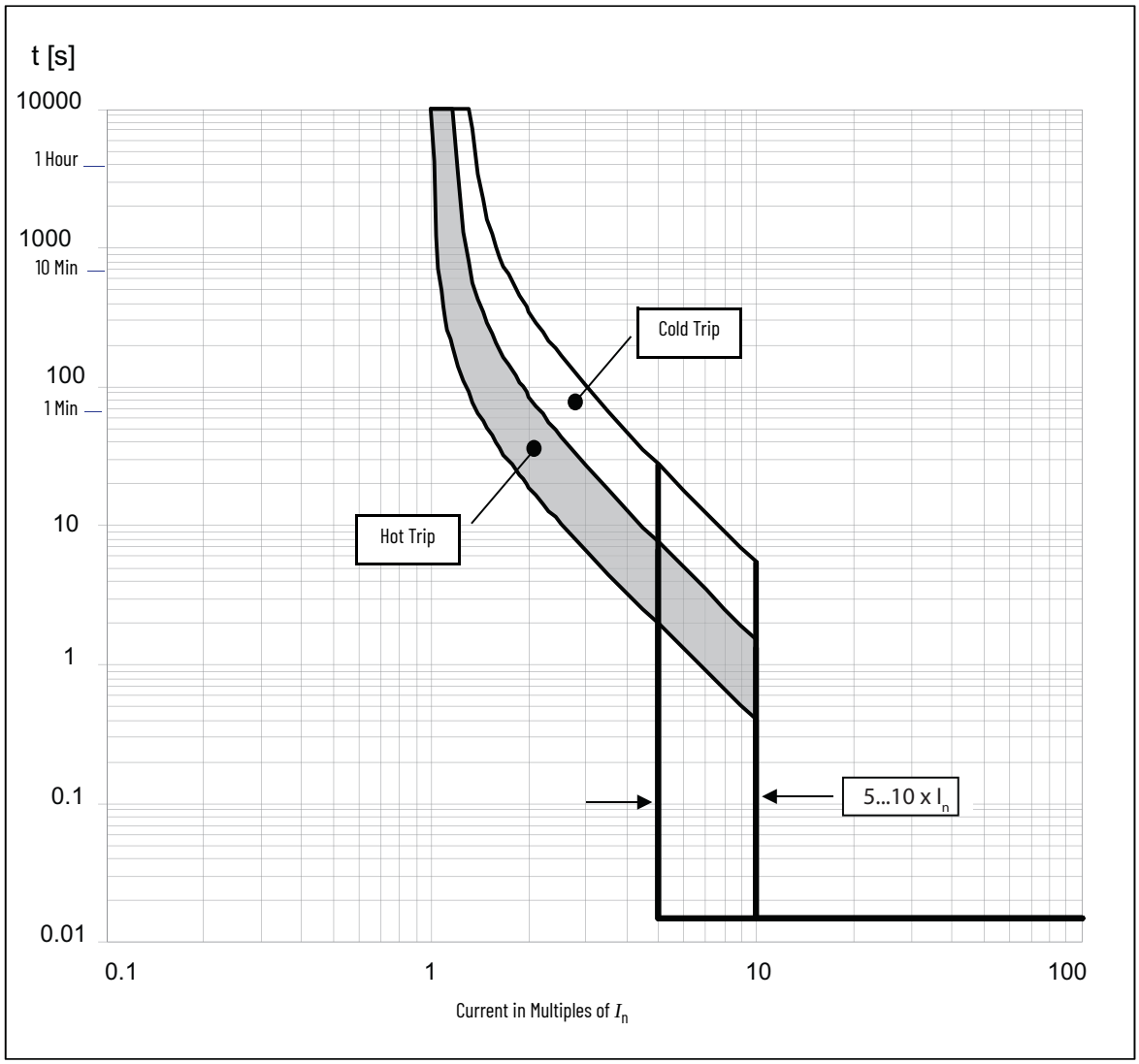

Figure 65 - 140G-H Time-current Curve

- Maximum voltage: 600V AC
- Maximum current: 160 A
- Instantaneous (magnetic) trip tolerance: -20%/+30%

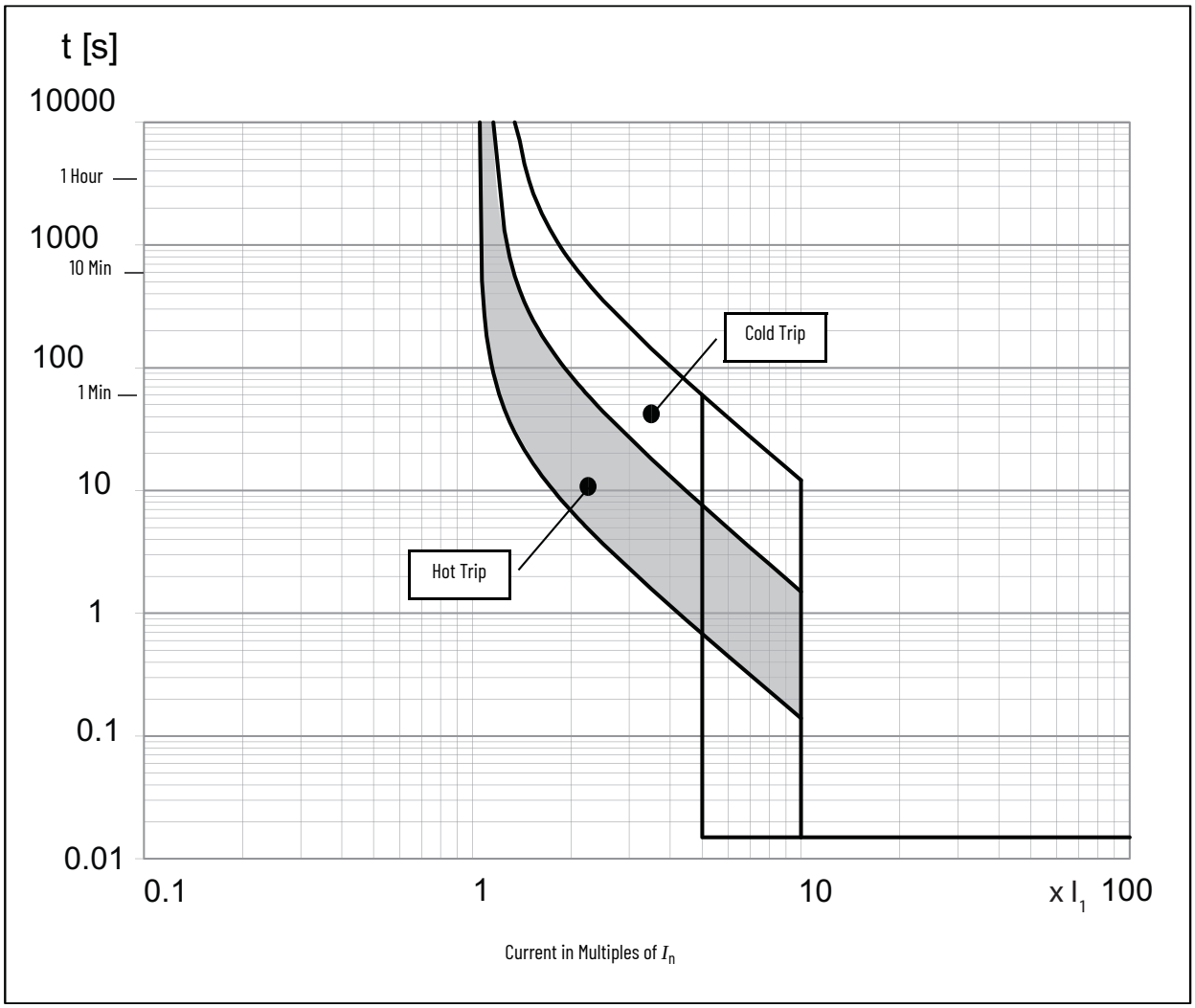

Figure 66 - 140G-I Time-current Curve

- Maximum voltage: 600Y/347V AC
- Maximum current: 60...100 A
- Instantaneous (magnetic) trip tolerance: -20%/+30%

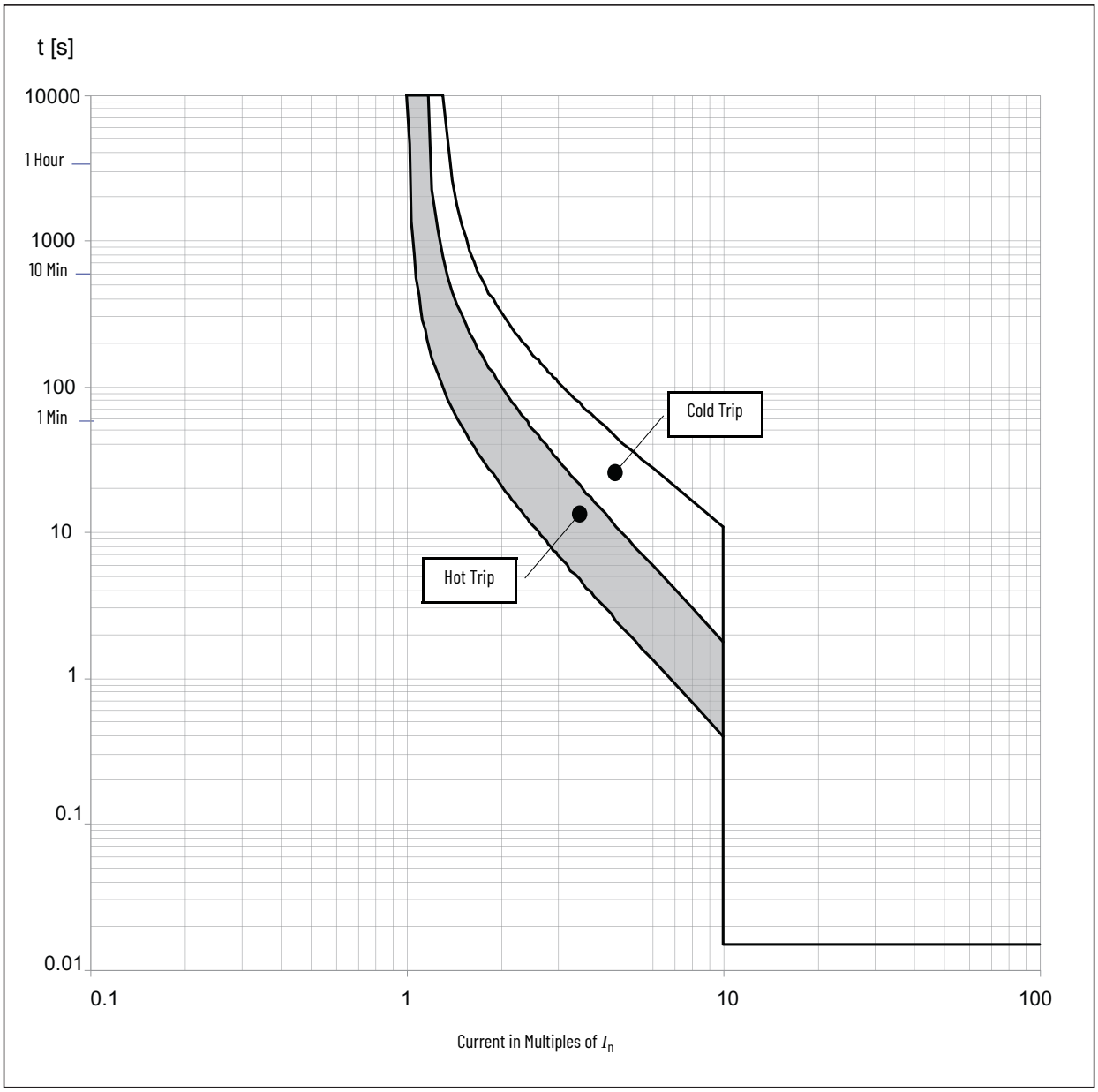

Figure 67 - 140G-I Time-current Curve

- Maximum voltage: 600Y/347V AC
- Maximum current: 110...150 A
- Instantaneous (magnetic) trip tolerance: -20%/+30%

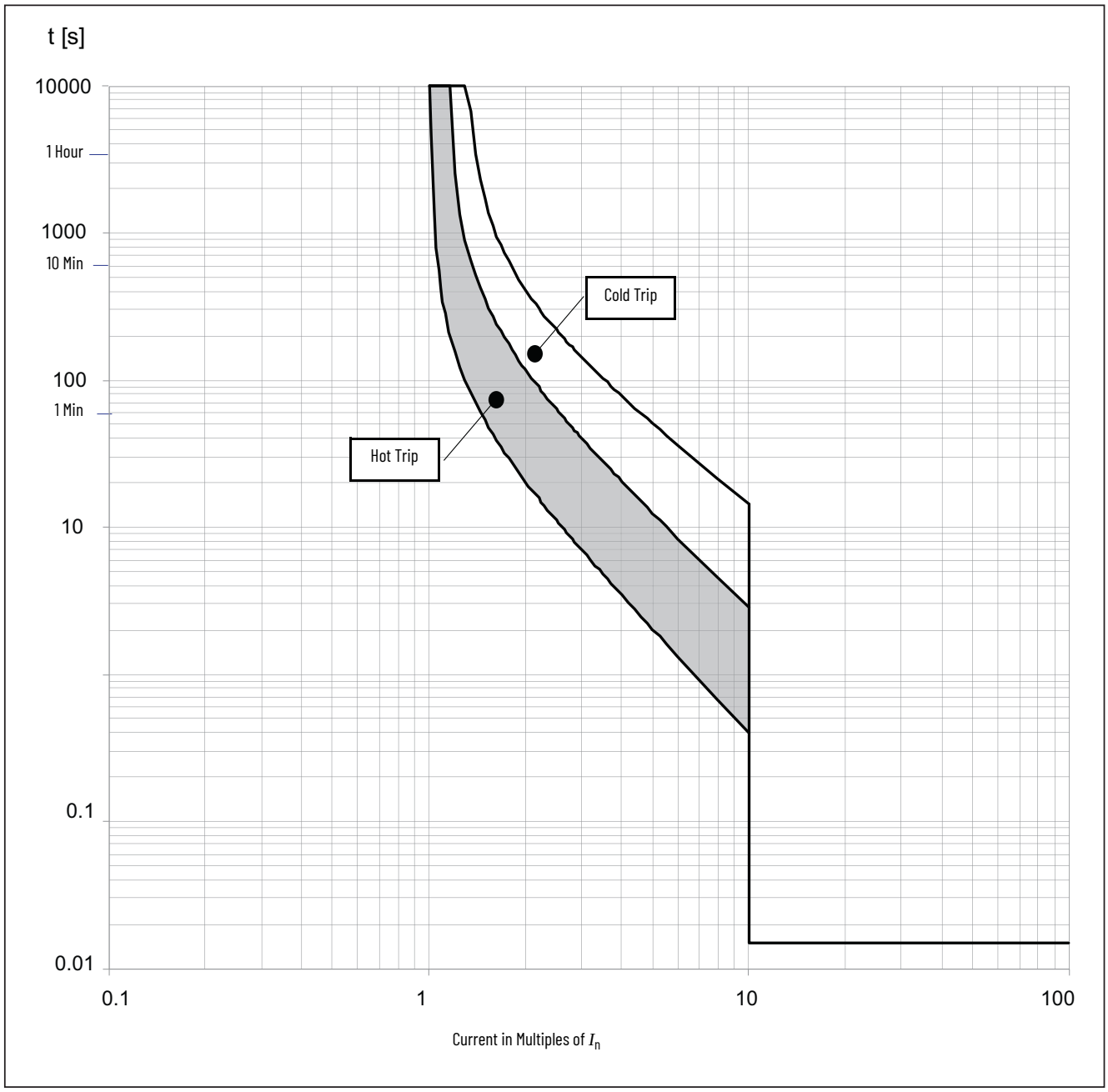

Figure 68 - 140G-I Time-current Curve

- Maximum voltage: 600Y/347V AC, 480V AC
- Maximum current: 160...225 A
- Instantaneous (magnetic) trip tolerance: -20%/+30%

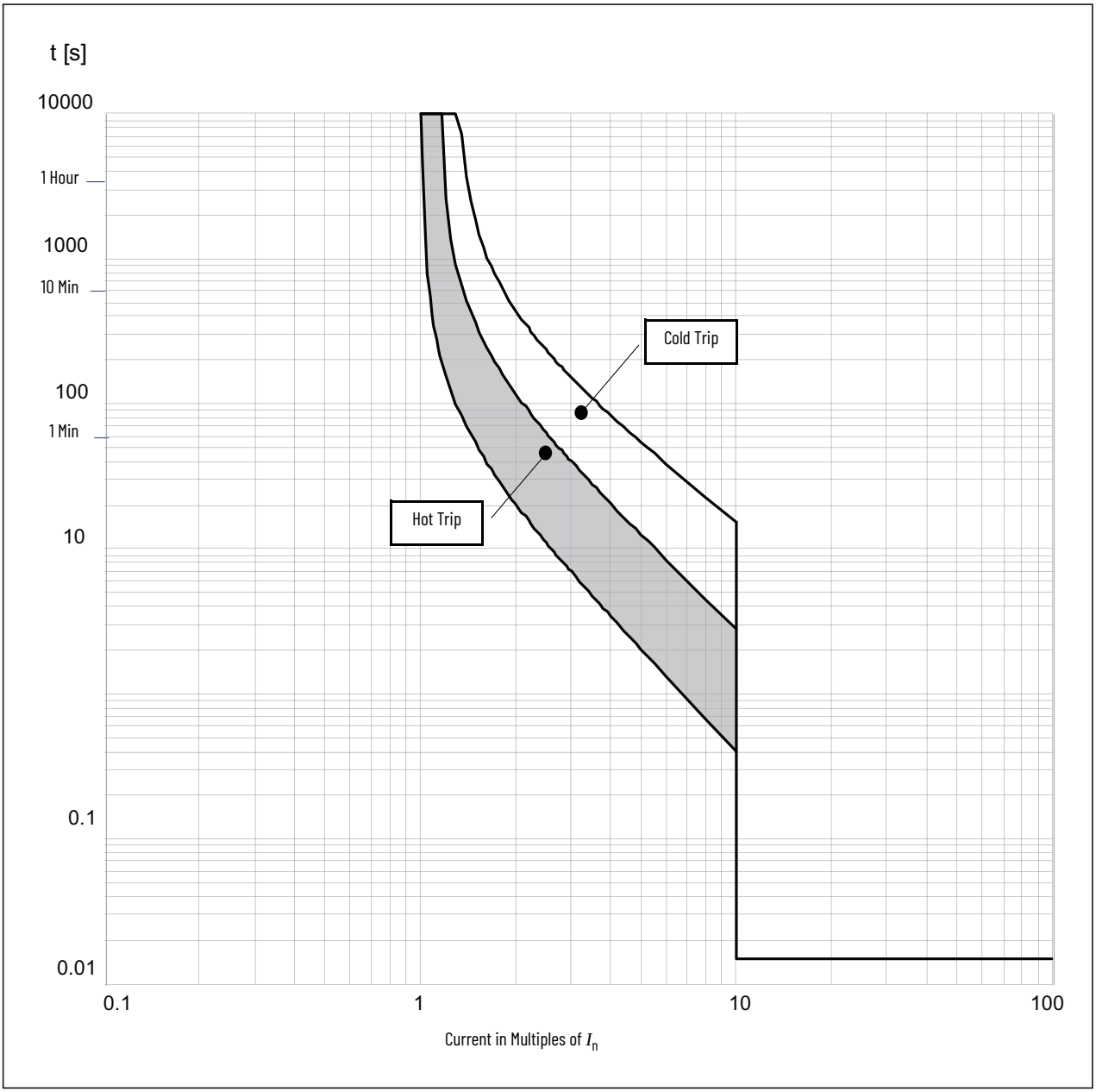

Figure 69 - 140G-J Time-current Curve

- Maximum voltage: 600V AC
- Maximum current: 25...50 A
- Instantaneous (magnetic) trip tolerance: -20%/+30%

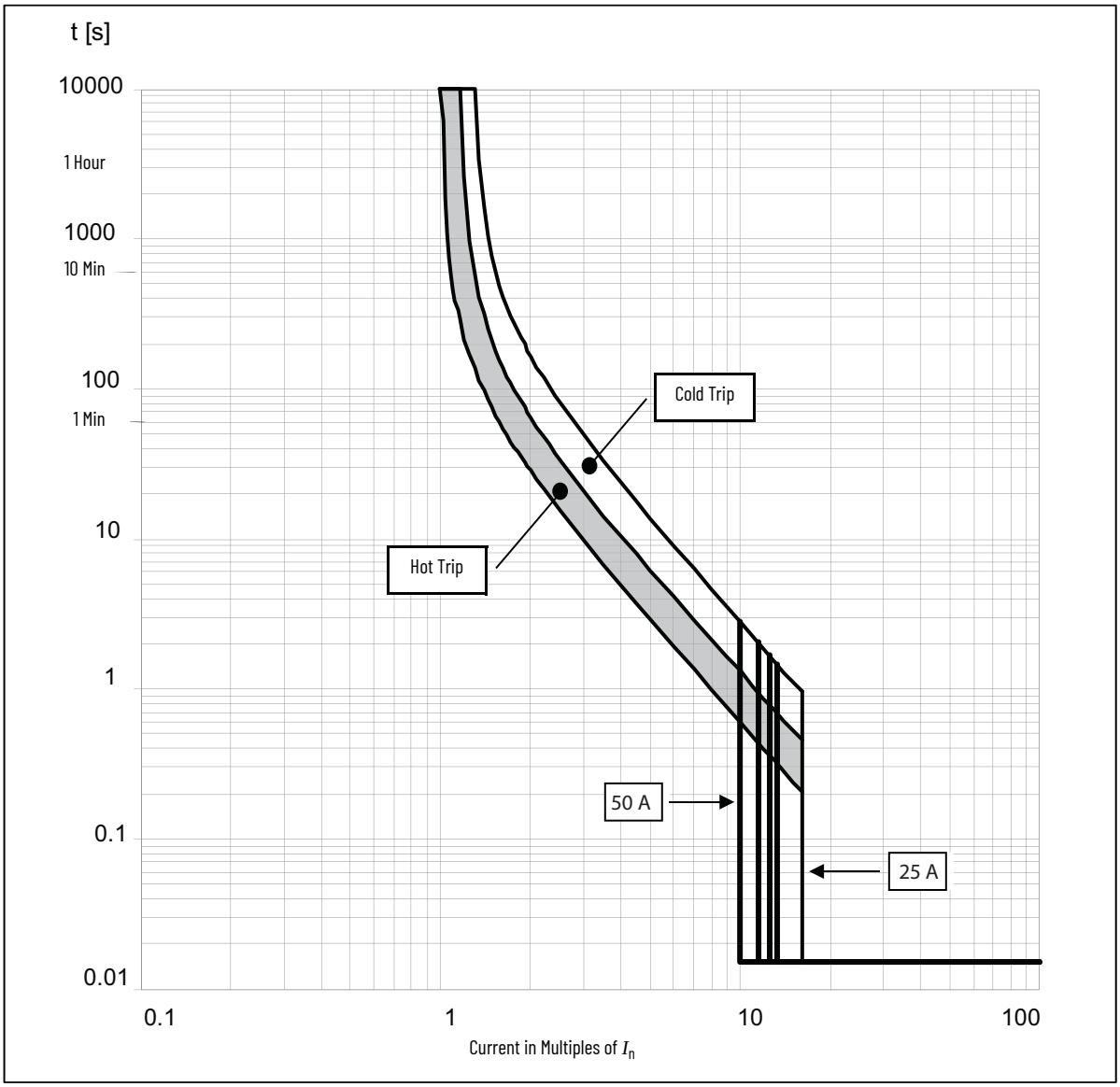

Table 255 - Current Ratings

Rated Current I_n [A]	Magnetic Trip I_m [A]
25...40	400
50	500

Figure 70 - 140G-J Time-current Curve

- Maximum voltage: 600V AC
- Maximum current: 60...70 A
- Instantaneous (magnetic) trip tolerance: -20%/+30%

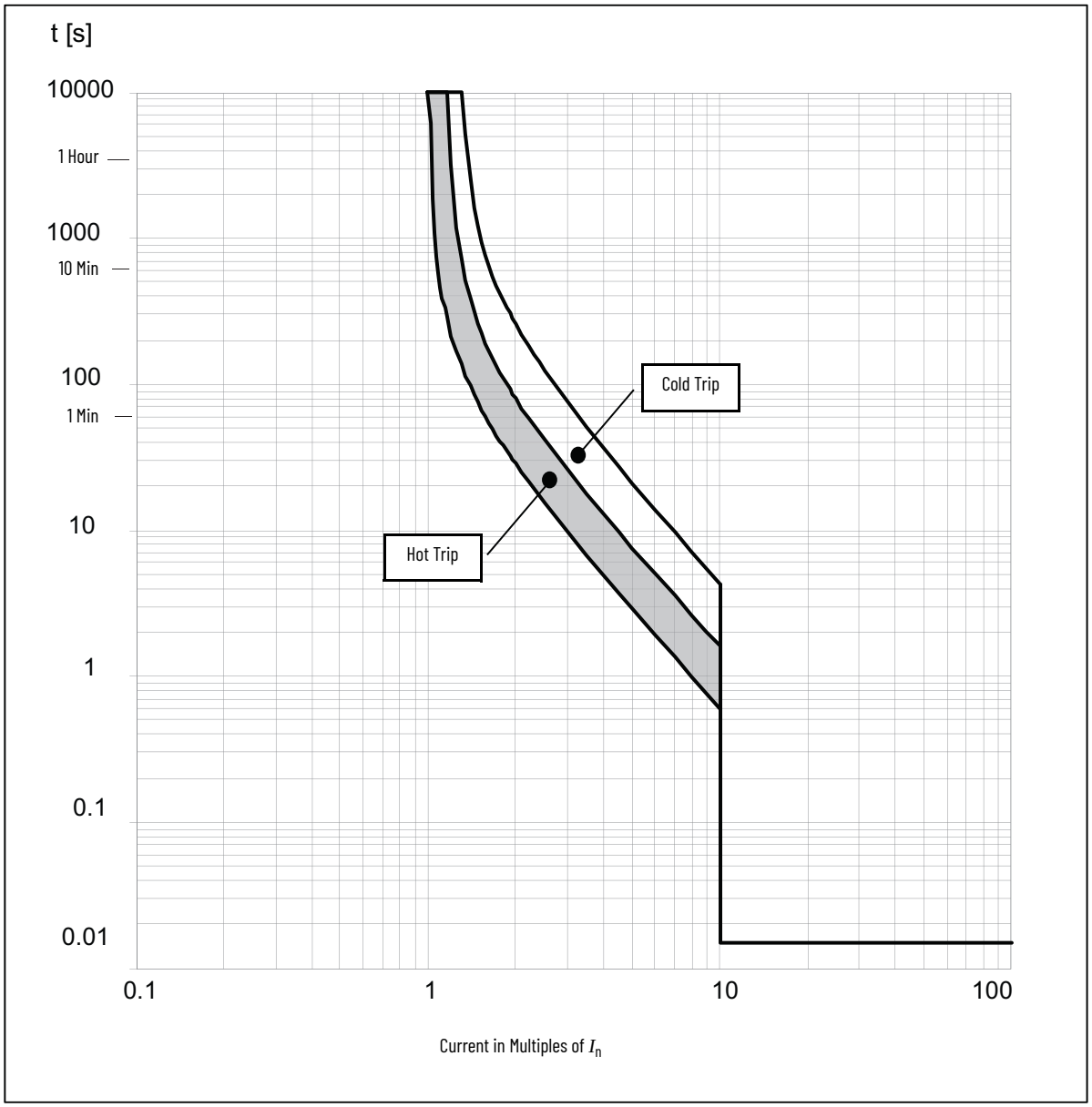

Table 256 - Current Ratings

Rated Current I_n [A]	Magnetic Trip I_m [A]
60	600
63	630
70	700

Figure 71 - 140G-J Time-current Curve

- Maximum voltage: 600V AC
- Maximum current: 80...100 A
- Instantaneous (magnetic) trip tolerance: -20%/+30%

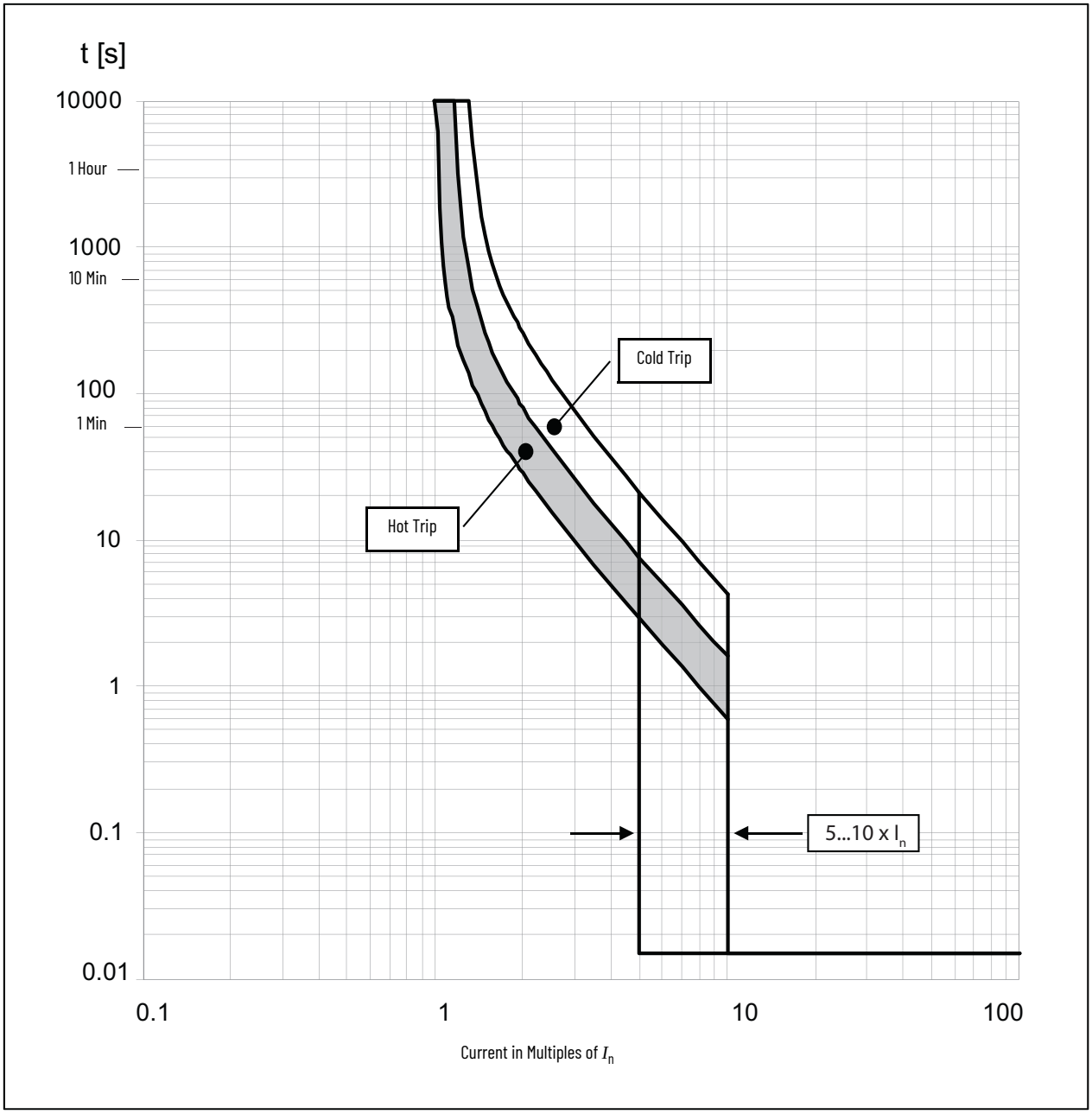

Figure 72 - 140G-J Time-current Curve

- Maximum voltage: 600V AC
- Maximum current: 110...150 A
- Instantaneous (magnetic) trip tolerance: -20%/+30%

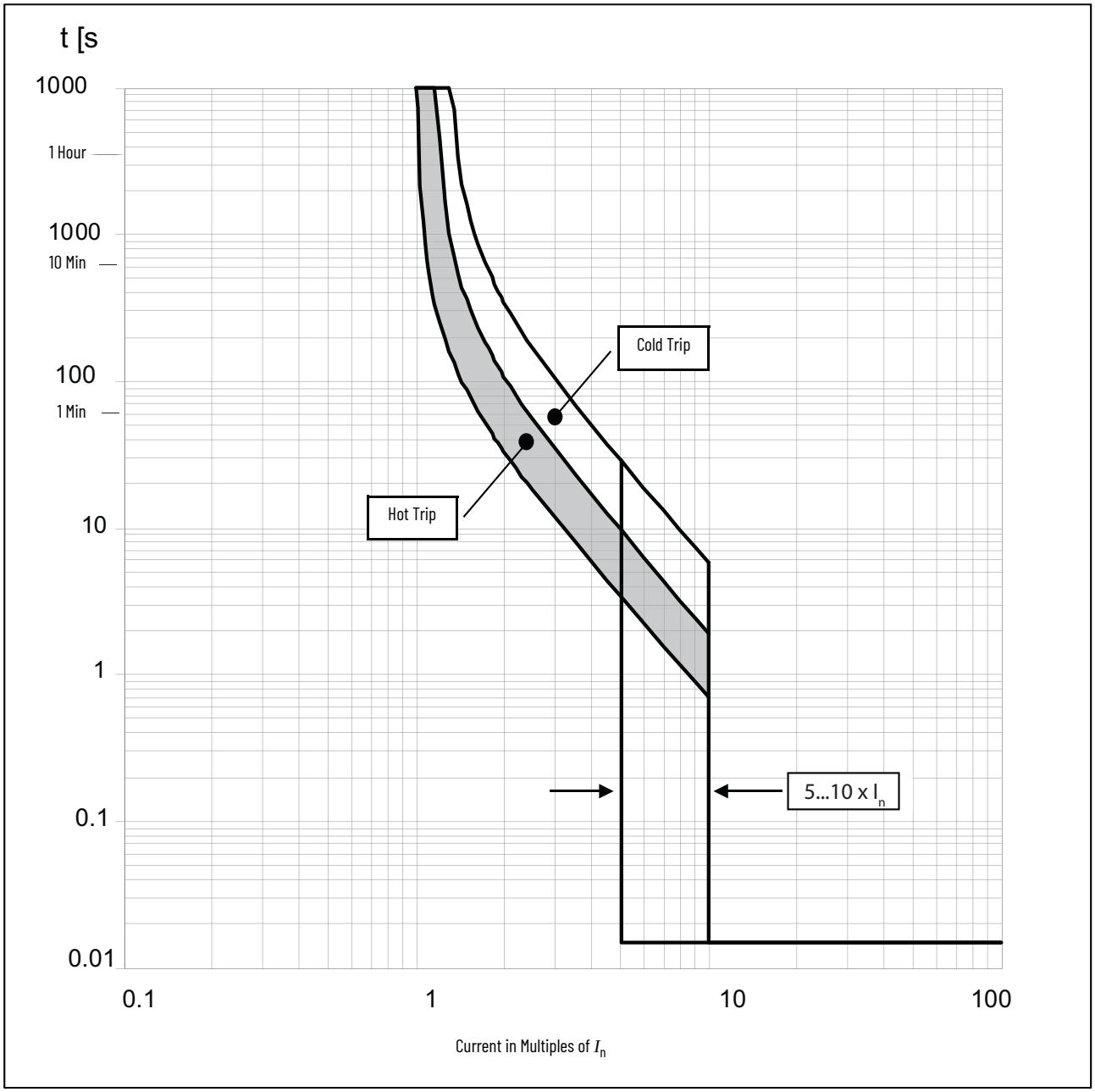

Figure 73 - 140G-J Time-current Curve

- Maximum voltage: 600V AC
- Maximum current: 160...225 A
- Instantaneous (magnetic) trip tolerance: -20%/+30%

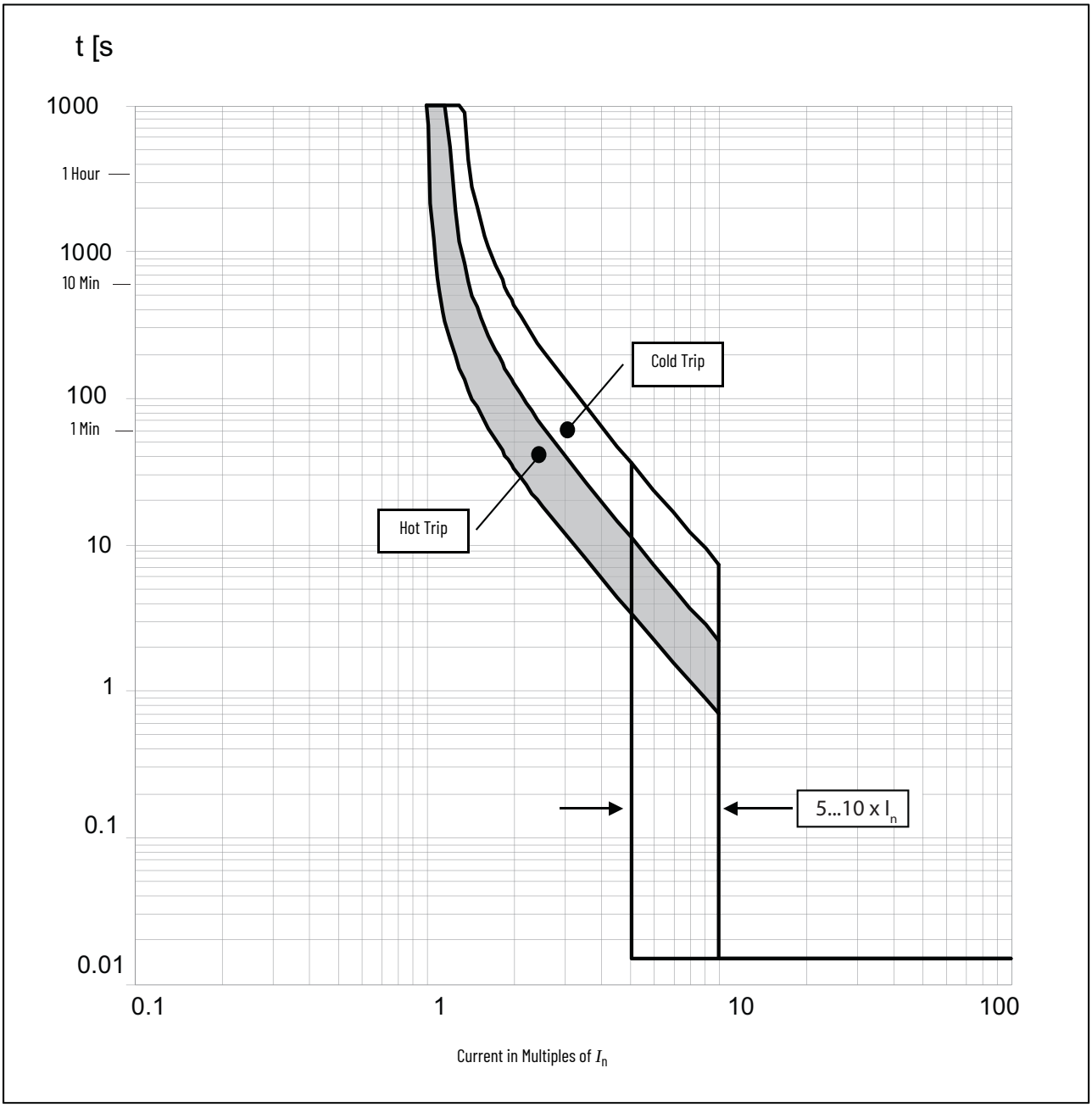

Figure 74 - 140G-J Time-current Curve

- Maximum voltage: 600V AC
- Maximum current: 250 A
- Instantaneous (magnetic) trip tolerance: -20%/+30%

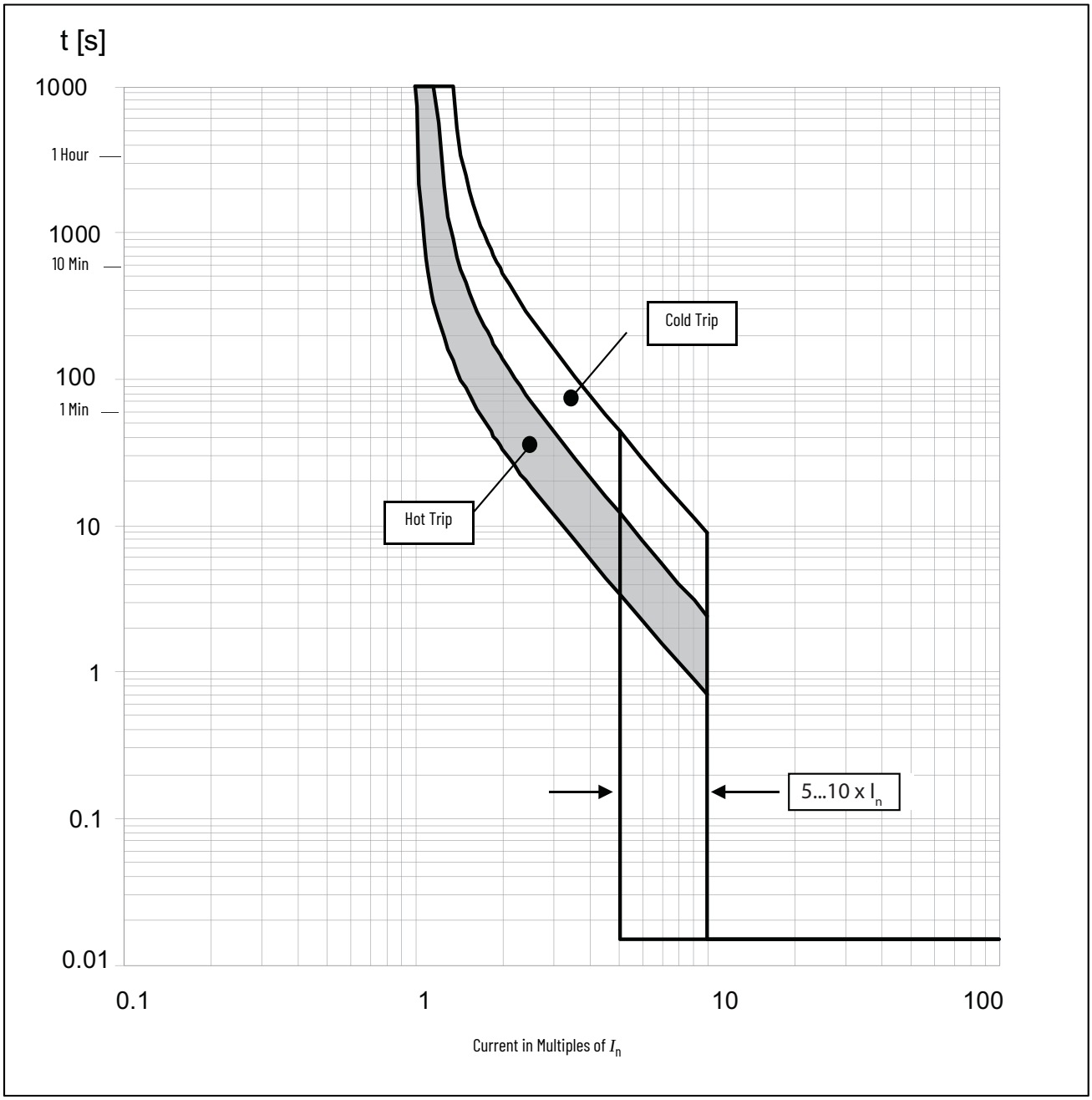

Figure 75 - 140G-K Time-current Curve

- Maximum voltage: 600V AC
- Maximum current: 300, 400 A
- Adjustable thermal/ adjustable magnetic release
- Instantaneous (magnetic) trip tolerance: -20%/+30%

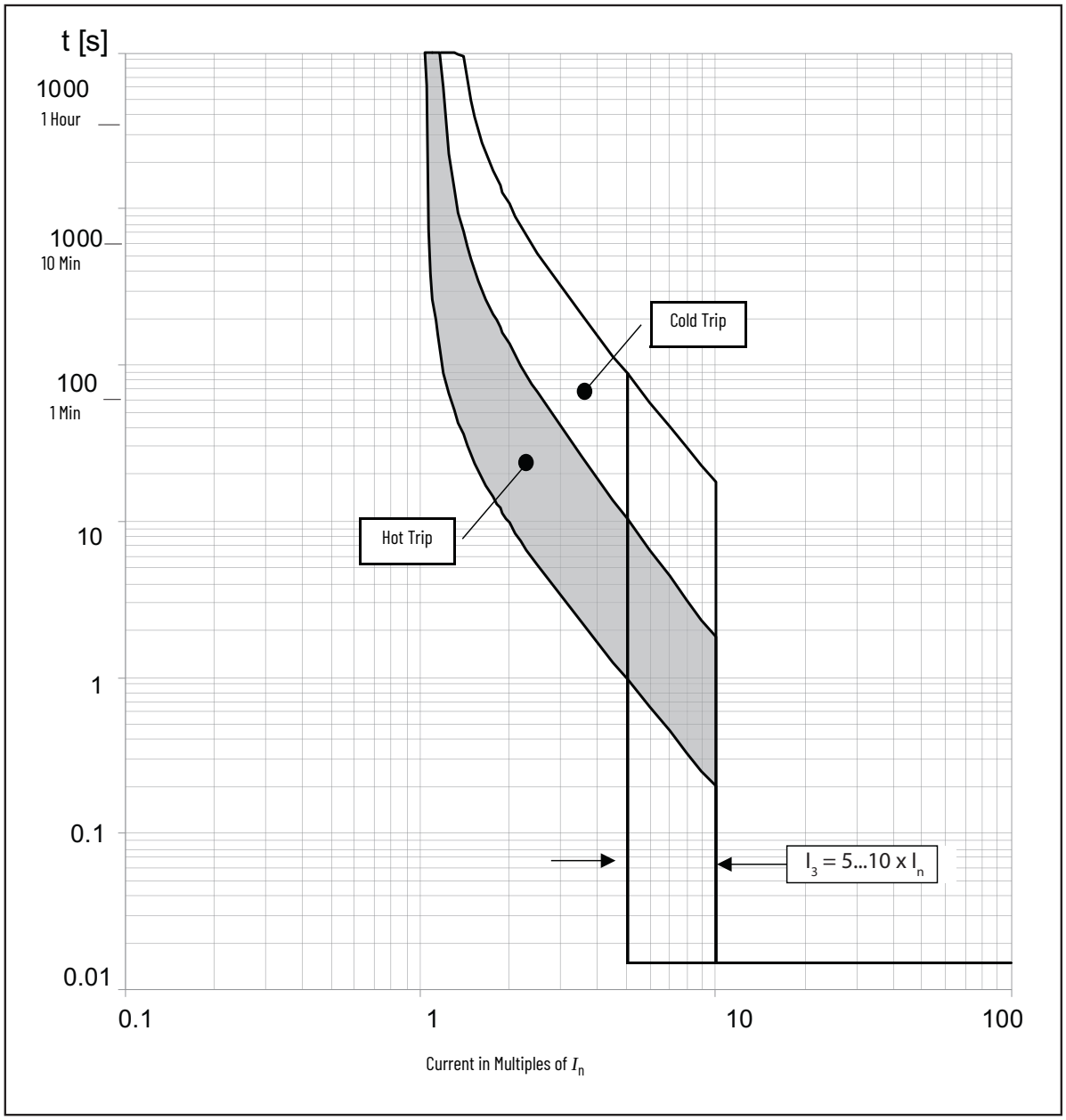

Figure 76 - 140G-M Time-current Curve

- Maximum voltage: 600V AC
- Maximum current: 600 A
- Instantaneous (magnetic) trip tolerance: -20%/+30%

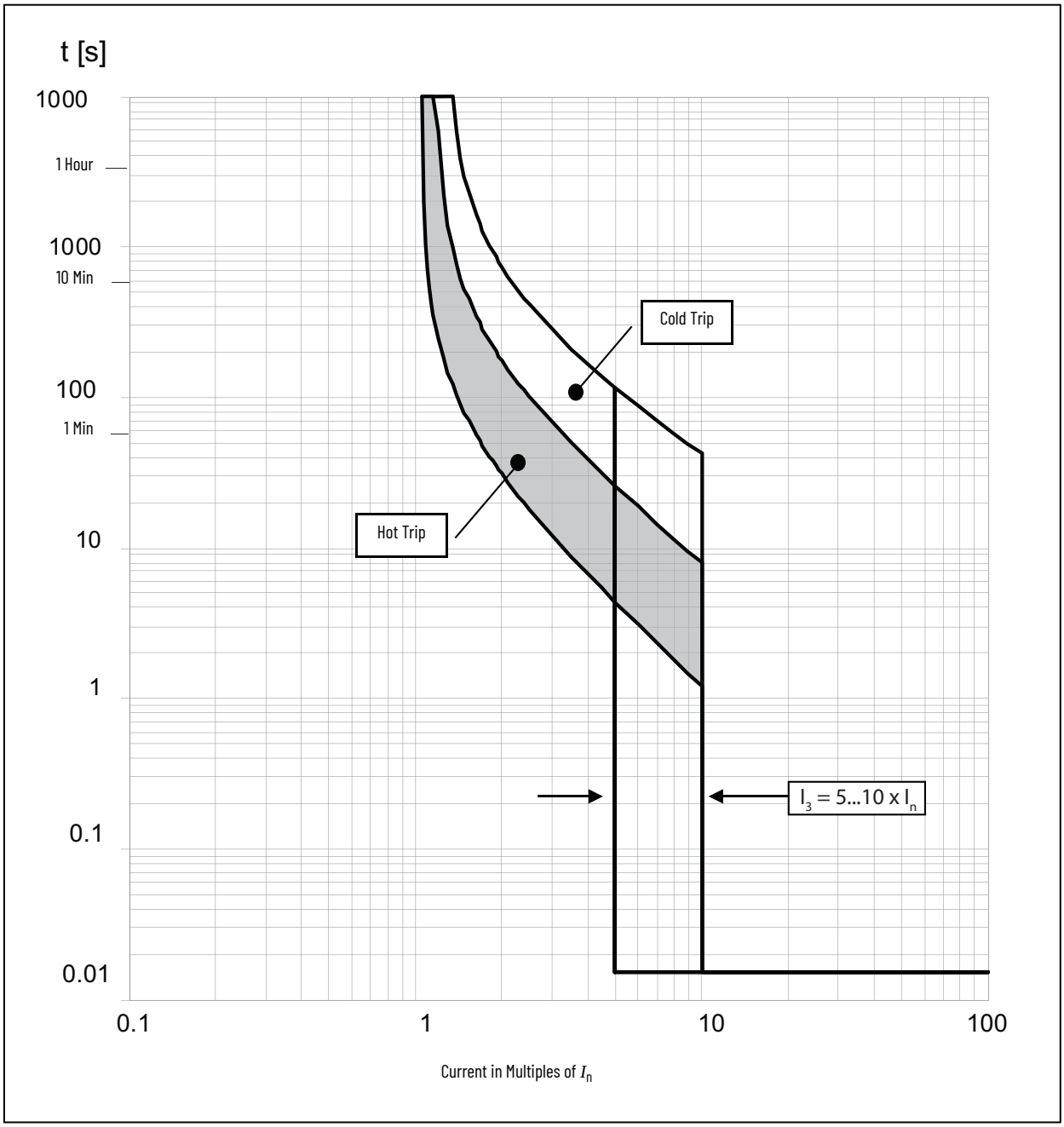

Figure 77 - 140G-M Time-current Curve

- Maximum voltage: 600V AC
- Maximum current: 630 A
- Instantaneous (magnetic) trip tolerance: -20%/+30%

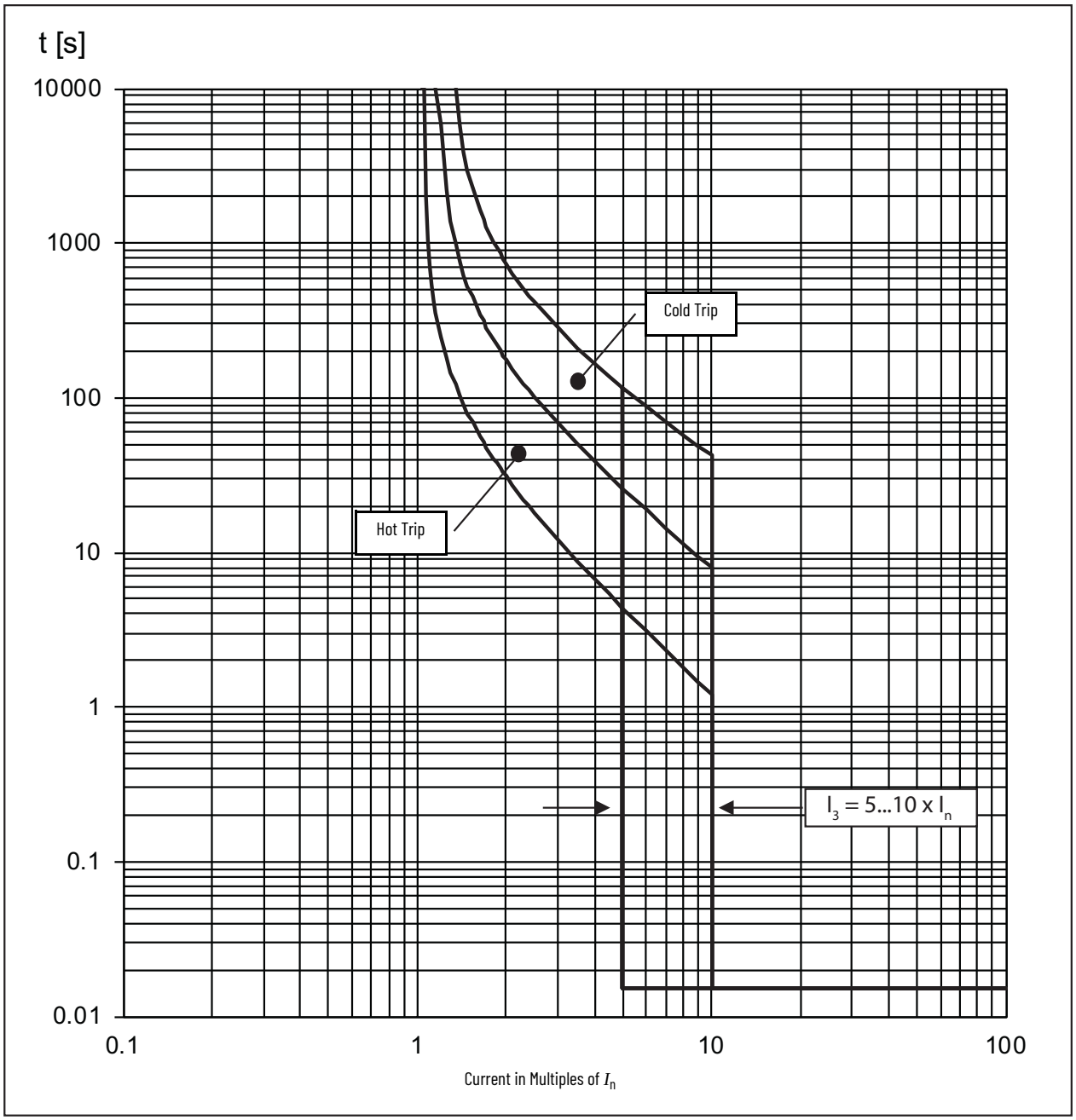

Figure 78 - 140G-M Time-current Curve

- Maximum voltage: 600V AC
- Maximum current: 800 A
- Adjustable thermal/ adjustable magnetic release
- Instantaneous (magnetic) trip tolerance: -20%/+30%

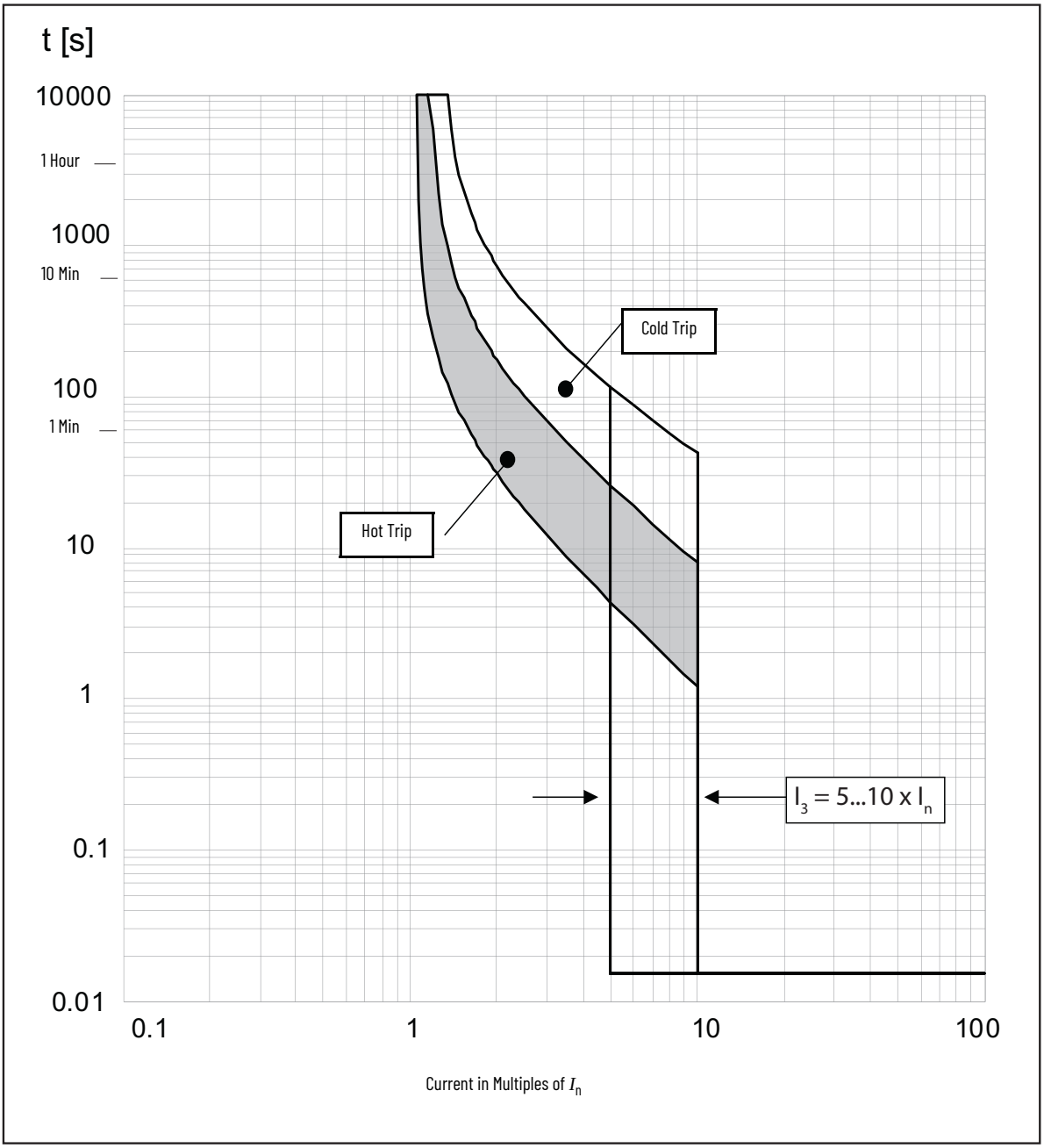

Bulletin 140G Electronic MCCB Trip Curves

Figure 79 - 140G-H Time-current Curve

- Maximum voltage: 600V AC, 50/60 Hz
- Trip unit rated current (I_n): 25 A, 60 A, 100 A, 125 A
- Electronic trip unit. Long delay response, short delay with I^2t response, and instantaneous curve

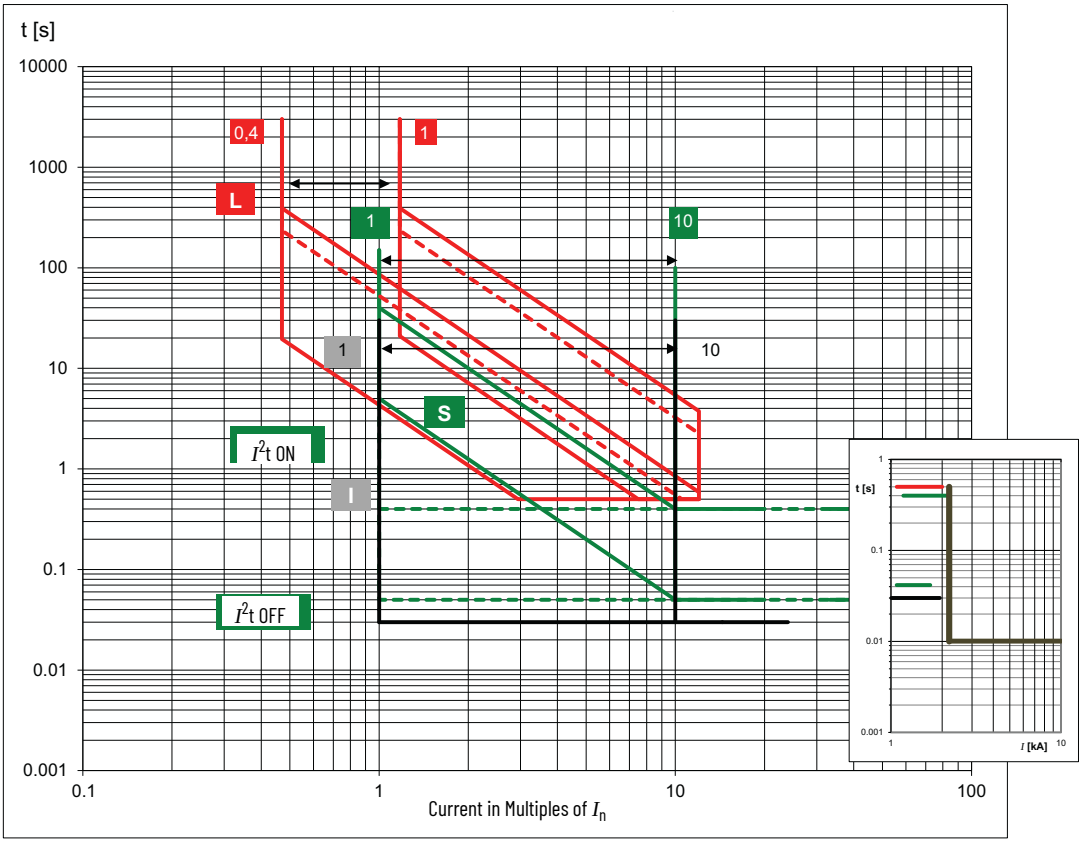

Table 257 - Tolerance Values

Protection	Trip Threshold	Trip Time
L	$1.05 \le x\ I_1 \le 1.25$	± 20%
S	± 10%	± 20%
I	± 15%	≤ 60 ms
Others	± 20%	

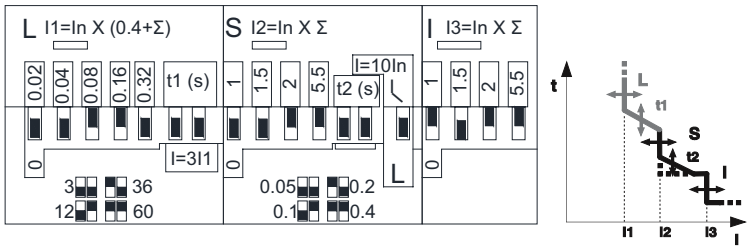

Notes:

1. Curve accuracy applies from -20...+55 °C (-4...+131 °F) ambient temperature. For possible continuous ampere derating for ambient temperature above 40 °C (104 °F), consult your local Rockwell Automation sales office or Allen-Bradley distributor.
2. The right portion of the curve is determined by the interrupting rating of the circuit breaker.
3. Total clearing times shown include the response times of the trip unit, the breaker opening, and the interruption of the current.
4. For high fault current levels, an additional fixed instantaneous hardware override is provided at 10.5 x I_n.

Figure 80 - 140G-H Ground Fault Protection Curve

- Maximum voltage: 600V AC, 50/60 Hz
- Trip unit rated current (I_n): 25 A, 60 A, 100 A, 125 A

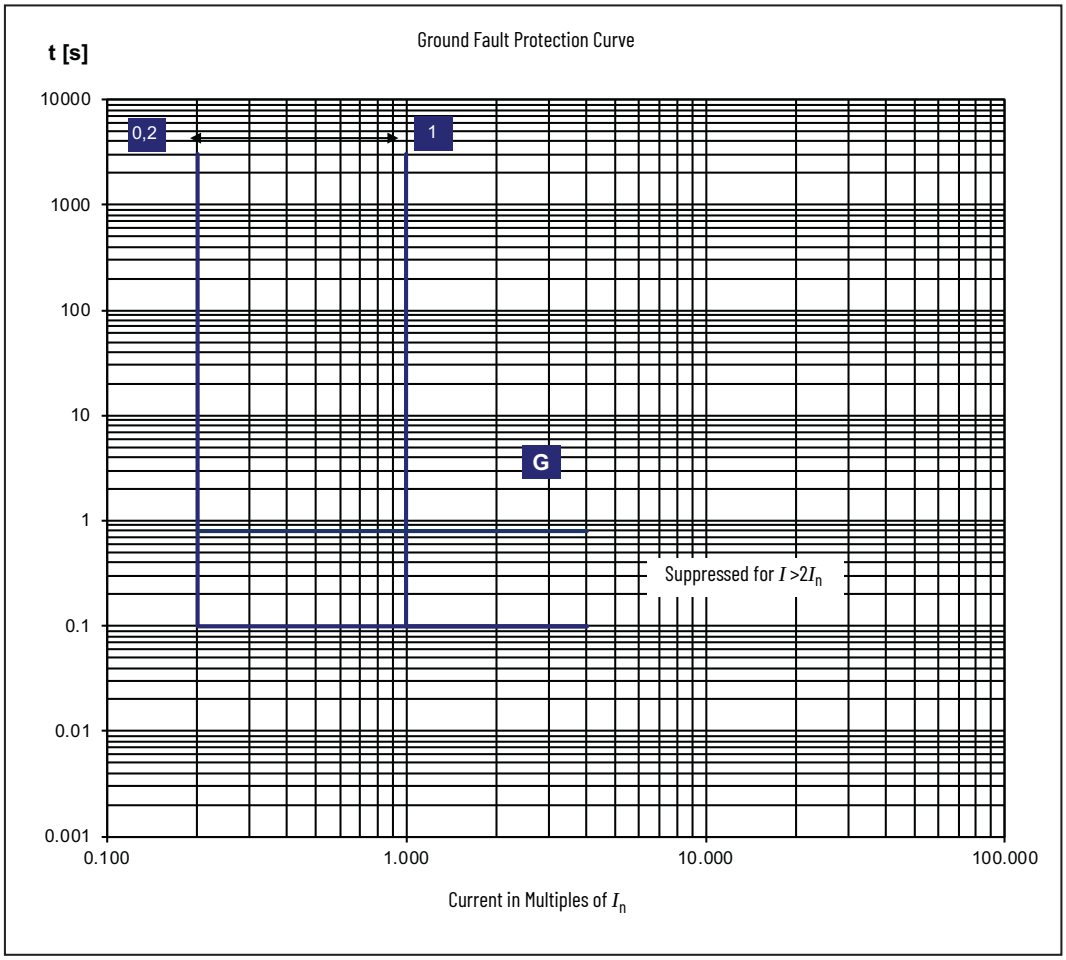

Table 258 - Tolerance Values

Protection	Trip Threshold	Trip Time
G	± 10%	± 20%

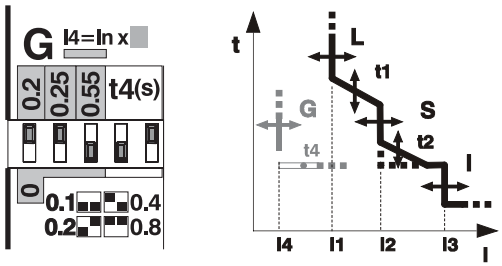

Table 259 - Ground Fault Current Ratings

	I_4 [I_n]						
I_n [A]	**0.2**	**0.25**	**0.45**	**0.55**	**0.75**	**0.8**	**1**
25	5	6.25	11.3	13.8	18.8	20	25
60	12	15	27	33	45	48	60
100	20	25	45	55	75	80	100
125	25	31.3	56.3	68.8	93.8	100	125
160 (IEC only)	32	40	75	88	120	128	160

Figure 81 - 140G-J Time-current Curve

- Maximum voltage: 600V AC, 50/60 Hz
- Trip unit rated current (I_n): 40 A; 60 A; 100 A; 150 A; 250 A
- Electronic trip unit. Long delay response, short delay with I^2t response, and instantaneous curve

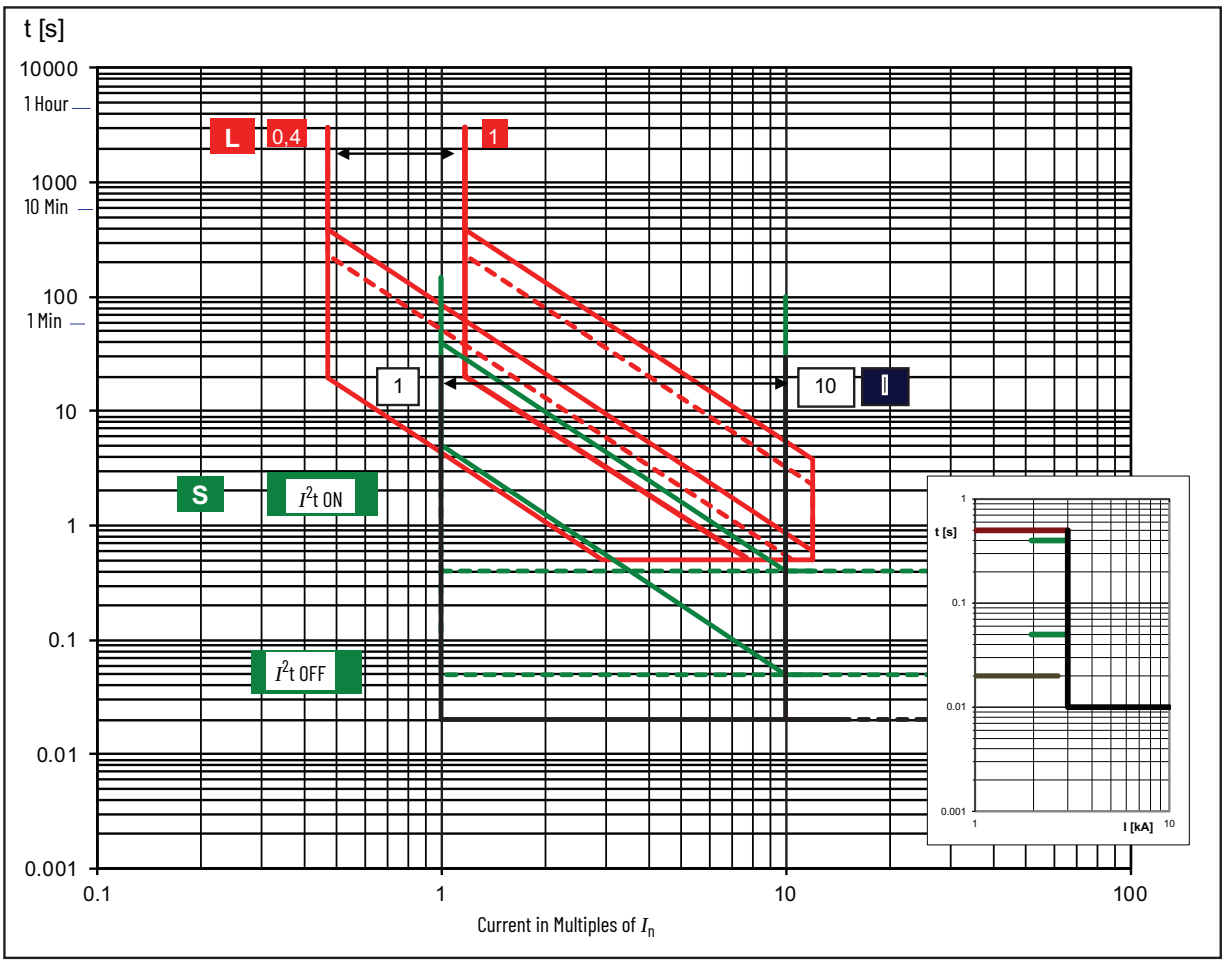

Table 260 - Tolerance Values

Protection	Trip Threshold	Trip Time
L	$1.05 \le x\ I_1 \le 1.25$	± 20%
S	± 10%	± 20%
I	± 15%	≤ 60 ms
Others	± 20%	

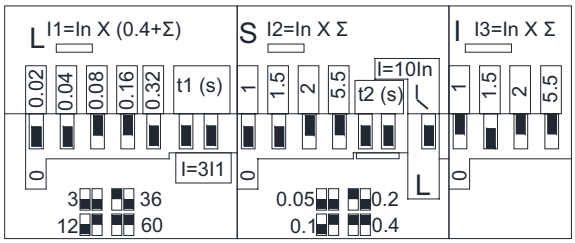

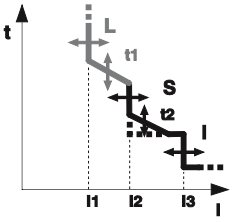

Notes:

1. Curve accuracy applies from -20...+55 °C (-4...+131 °F) ambient temperature. For possible continuous ampere derating for ambient temperature above 40 °C (104 °F), consult your local Rockwell Automation sales office or Allen-Bradley distributor.
2. The right portion of the curve is determined by the interrupting rating of the circuit breaker.
3. Total clearing times shown include the response times of the trip unit, the breaker opening, and the interruption of the current.
4. For high fault current levels, an additional fixed instantaneous hardware override is provided at 10.5 x I_n.

Figure 82 - 140G-J Ground Fault Protection Curve for LSIG MCCBs

- Maximum voltage: 600V AC, 50/60 Hz
- Trip unit rated current (I_n): 40 A, 60 A, 100 A, 150 A, 250 A

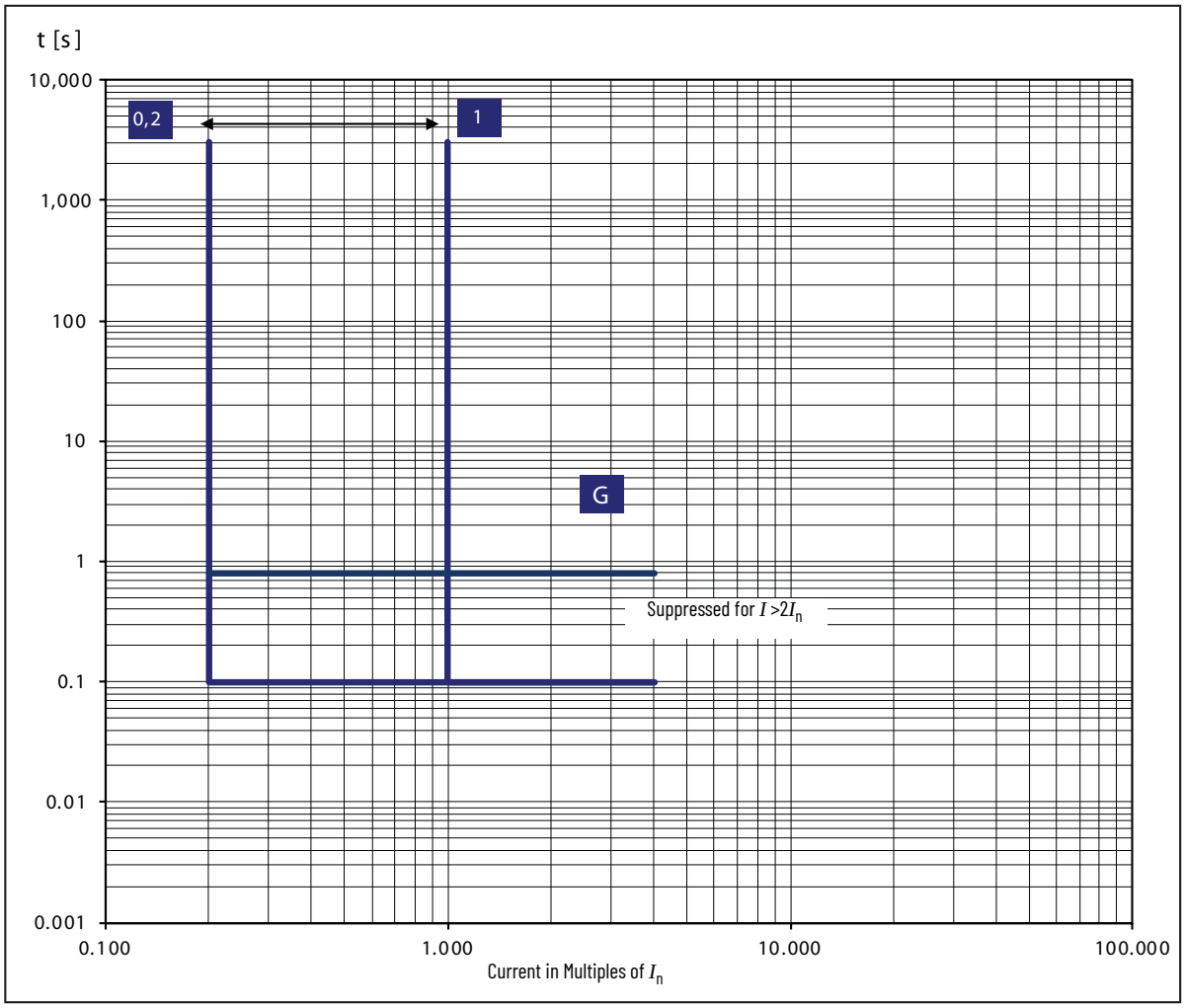

EXAMPLE:

- I_n = 100 A
- I_4 = 100 x (0.2 + 0.25) = 45 A
- t_4 = 0.2 s @ $I > I_4$

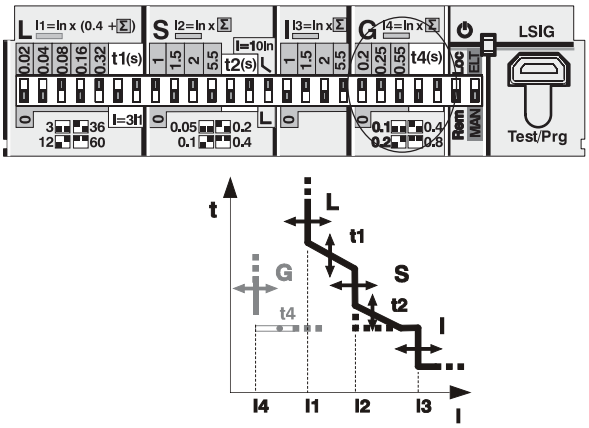

Table 261 - Ground Fault Current Ratings

	I_4 [I_n]						
I_n [A]	**0.2**	**0.25**	**0.45**	**0.55**	**0.75**	**0.8**	**1**
25	8	10	18	22	30	32	40
60	12	15	27	33	45	48	60
100	20	25	45	55	75	80	100
150	30	37.5	67.5	82.5	113	120	150
250	50	62.5	113	138	188	200	250

Figure 83 - 140G-K Time-current Curve

- Maximum voltage: 600V AC, 50/60 Hz
- Trip unit rated current (I_n): 300 A; 400 A
- Electronic trip unit. Long delay response, short delay with I^2t response, and instantaneous curve

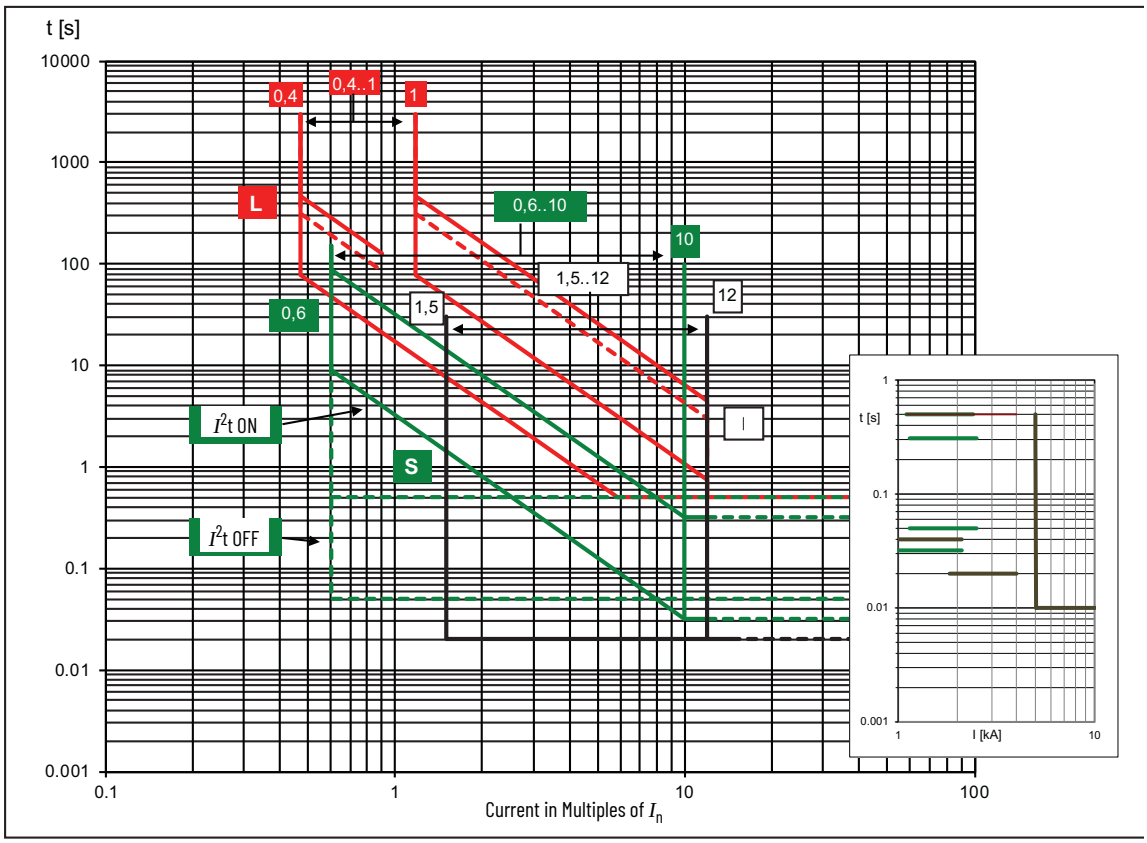

Table 262 - Tolerance Values

Protection	Trip Threshold	Trip Time
L	$1.05 \le x\ I_1 \le 1.25$	± 20%
S	± 10%	± 20%
I	± 15%	≤ 60 ms
Others	± 20%	–

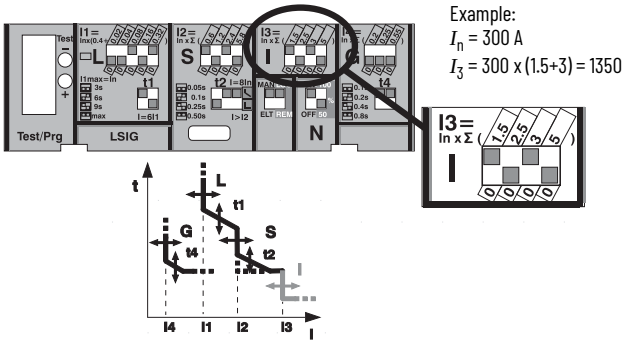

Notes:

1. Curve accuracy applies from -20...+55 °C (-4...+131 °F) ambient temperature. For possible continuous ampere derating for ambient temperature above 40 °C (104 °F), consult your local Rockwell Automation sales office or Allen-Bradley distributor.
2. The right portion of the curve is determined by the interrupting rating of the circuit breaker.
3. Total clearing times shown include the response times of the trip unit, the breaker opening, and the interruption of the current.
4. For high fault current levels, an additional fixed instantaneous hardware override is provided at 10.5 x I_n.

Table 263 - Current Ratings

	I_3 (I_n)														
I_n [A]	1.5	2.5	3	4	4.5	5	5.5	6.5	7	7.5	8	9	9.5	10.5	12
300	450	750	900	1200	1350	1500	1650	1950	2100	2250	2400	2700	2850	3150	3600
400	600	1000	1200	1600	1800	2000	2200	2600	2800	3000	3200	3600	3800	4200	4800

Figure 84 - 140G-K Ground Fault Protection Curve for LSIG MCCBs

- Maximum voltage: 600V AC, 50/60 Hz
- Trip unit rated current (I_n): 300 A, 400 A

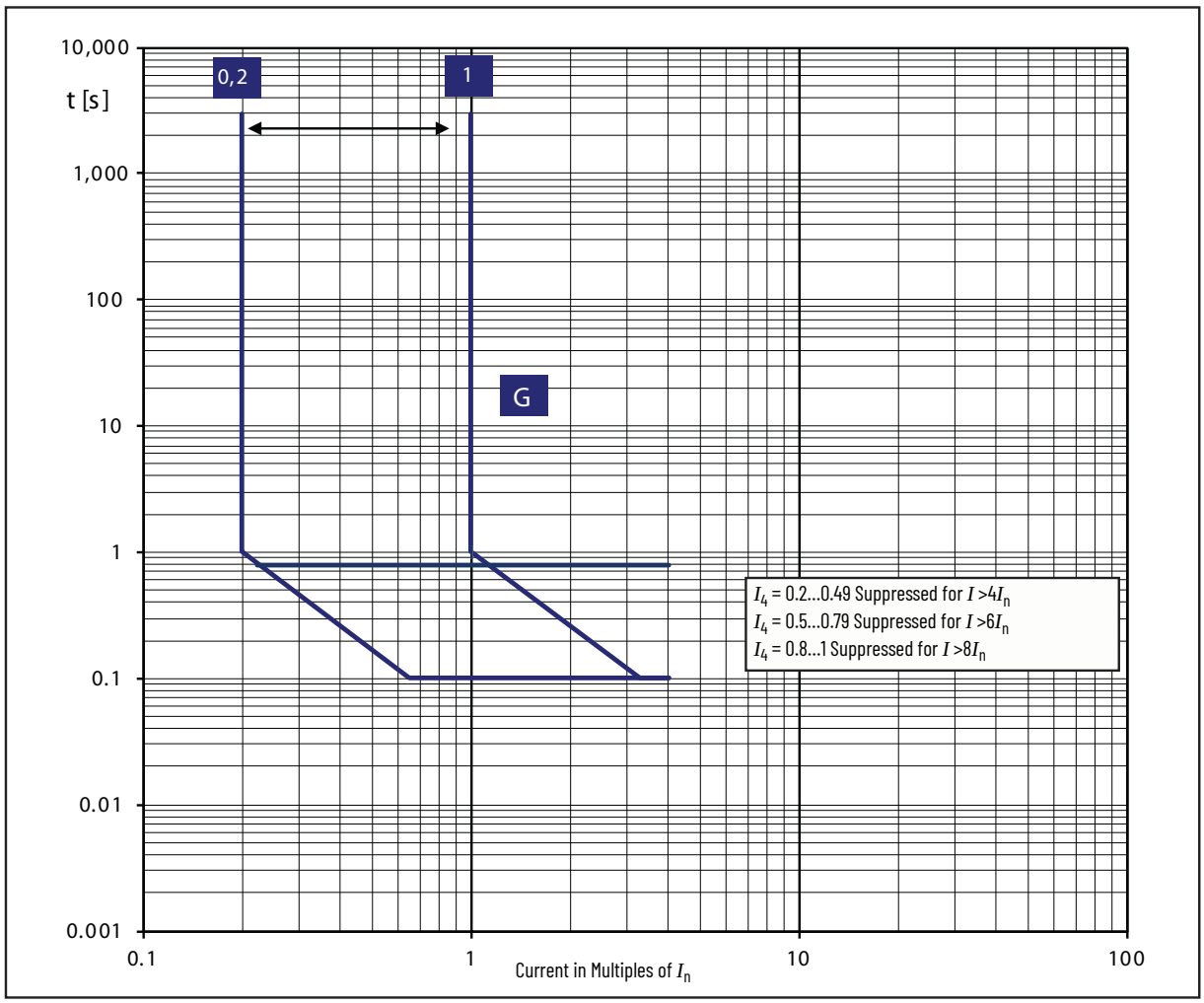

EXAMPLE:

- I_n = 300 A
- I_4 = 300 x (0.2 + 0.25) = 135 A
- t_4 = 0.2 s @ $I > I_4$

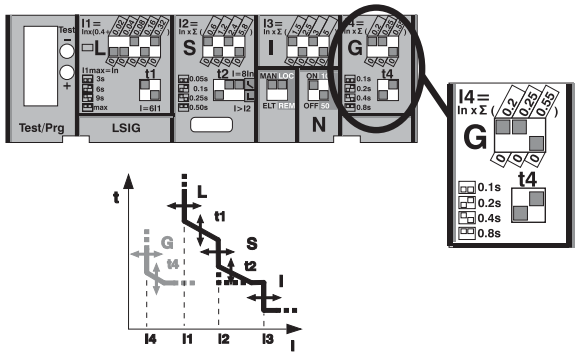

Table 264 - Ground Fault Current Ratings

	I_4 [I_n]						
I_n [A]	**0.2**	**0.25**	**0.45**	**0.55**	**0.75**	**0.8**	**1**
300	60	75	135	165	225	240	300
400	80	100	180	220	300	320	400

Figure 85 - 140G-M Time-current Curve

- Maximum voltage: 600V AC, 50/60 Hz
- Trip unit rated current (I_n): 600 A
- Electronic trip unit. Long delay response, short delay with I^2t response, and instantaneous curve

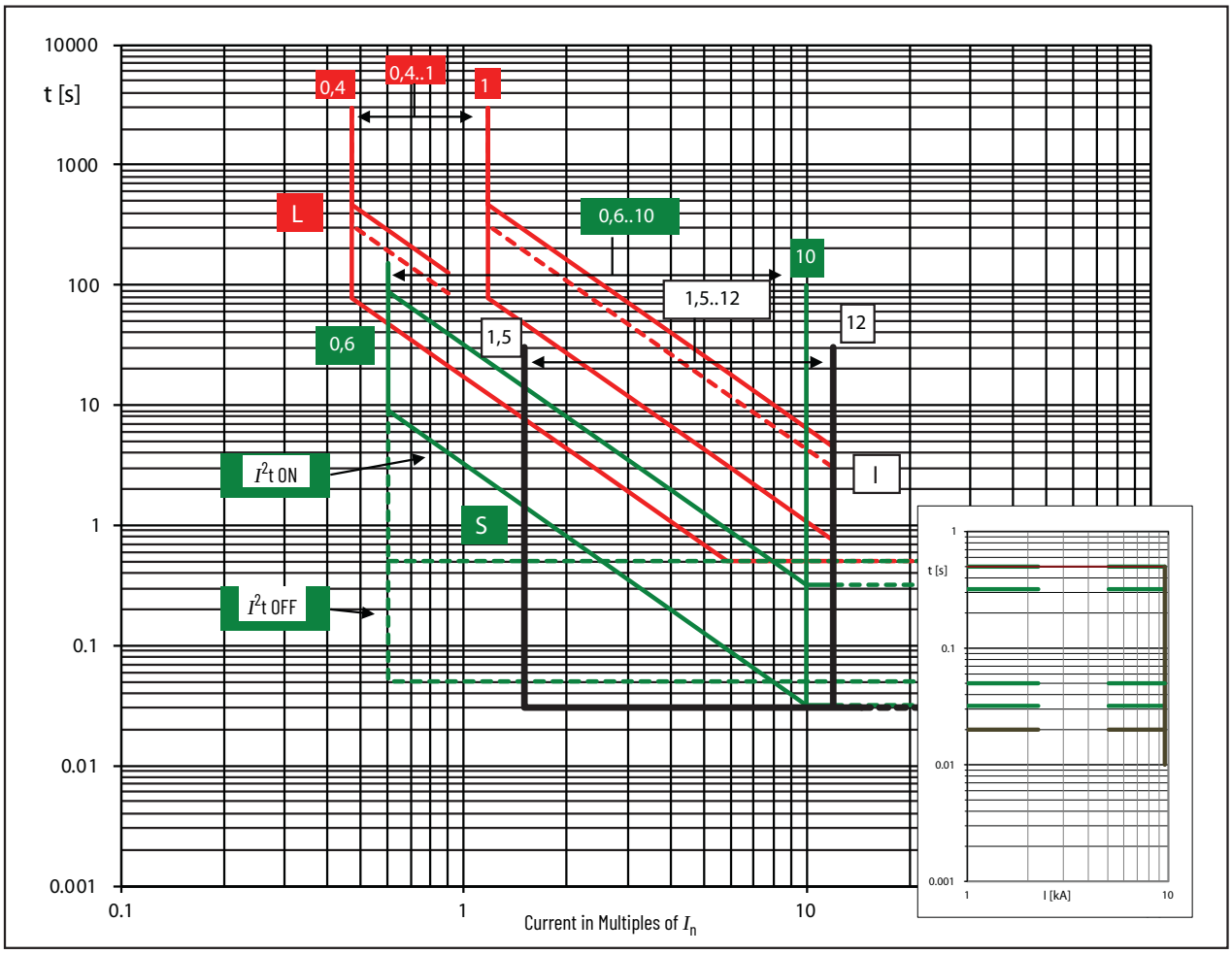

Table 265 - Tolerance Values

Protection	Trip Threshold	Trip Time
L	$1.05 \le x\ I_1 \le 1.25$	± 20%
S	± 10%	± 20%
I	± 15%	≤ 60 ms
Others	± 20%	–

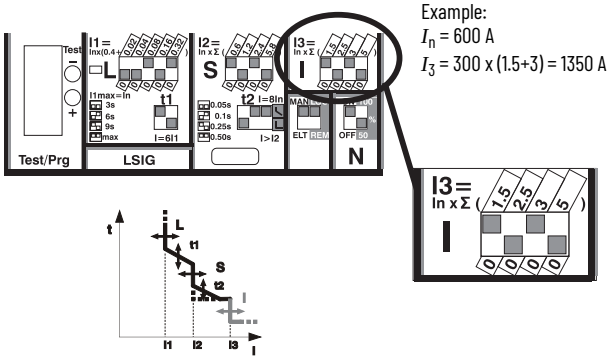

Example:
I_n = 600 A
I_3 = 300 x (1.5+3) = 1350 A

1. Curve accuracy applies from -20...+55 °C (-4...+131 °F) ambient temperature. For possible continuous ampere derating for ambient temperature above 40 °C (104 °F), consult your local Rockwell Automation sales office or Allen-Bradley distributor.
2. The right portion of the curve is determined by the interrupting rating of the circuit breaker.
3. Total clearing times shown include the response times of the trip unit, the breaker opening, and the interruption of the current.
4. For high fault current levels, an additional fixed instantaneous hardware override is provided at 10.5 x I_n.

Figure 86 - 140G-M Ground Fault Protection Curve for LSIG MCCBs

- Maximum voltage: 600V AC, 50/60 Hz
- Trip unit rated current (I_n): 600 A, 800 A

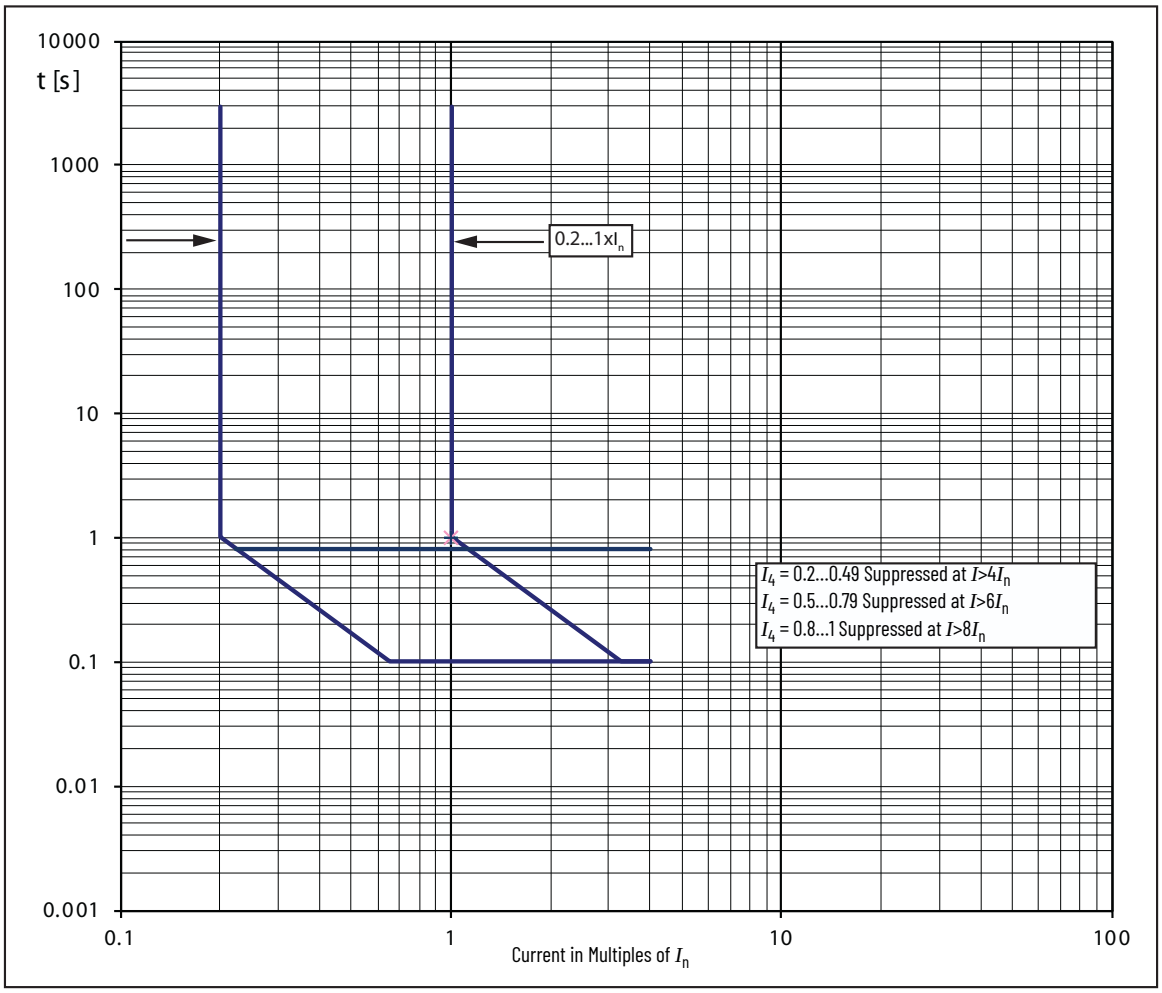

EXAMPLE:

- I_n = 100 A
- I_4 = 100 x (0.2 + 0.25) = 45 A
- t_4 = 0.2 s @ $I > I_4$

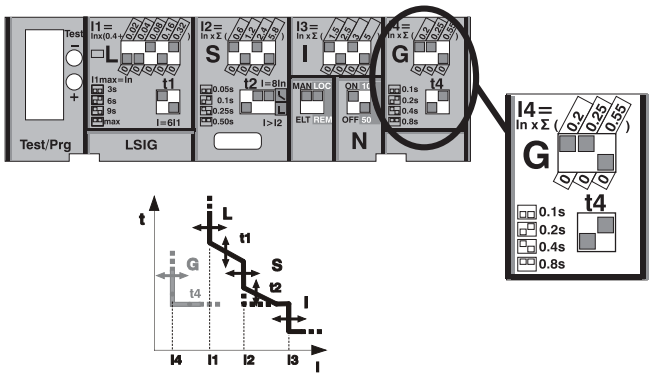

Figure 87 - 140G-N, 140G-NS Time-current Curve

- Maximum voltage: 600V AC, 50/60 Hz
- Trip unit rated current (I_n): 1200 A
- Electronic trip unit. Long delay response, short delay with I^2t response, and instantaneous curve

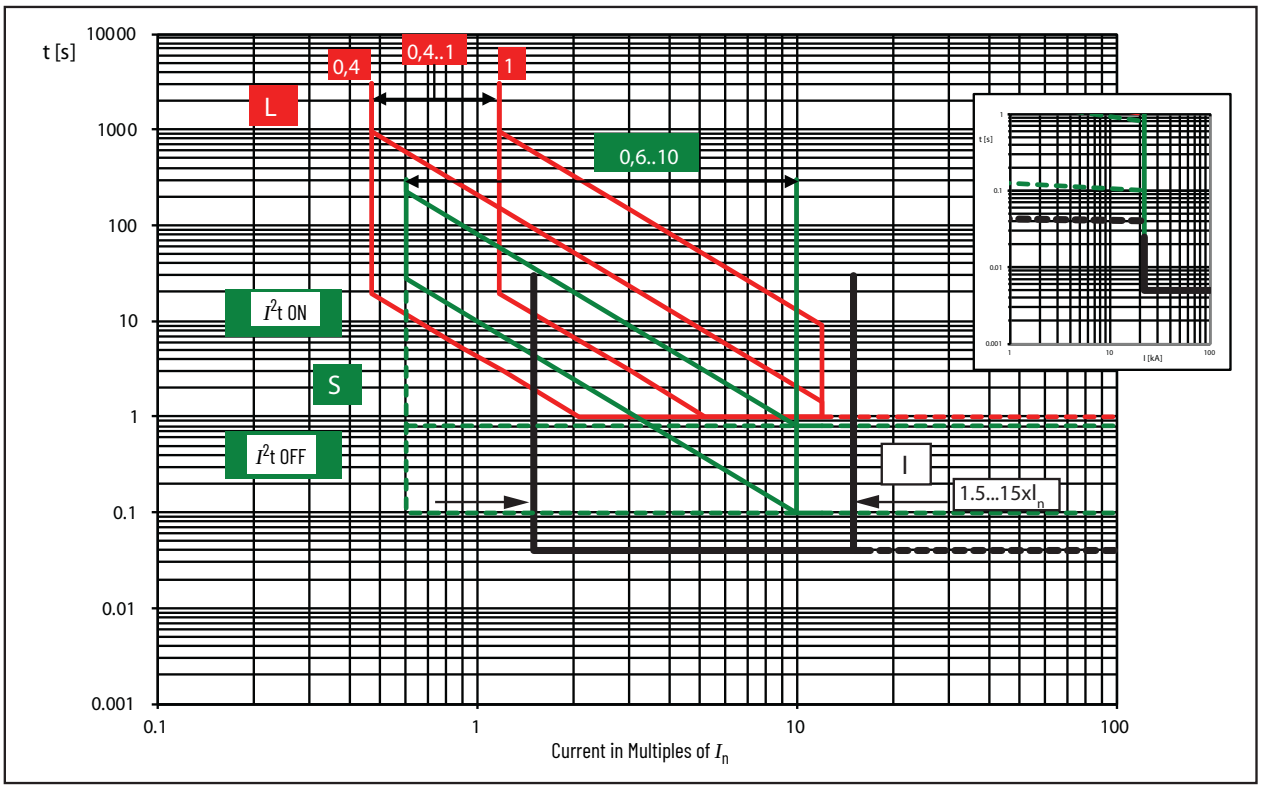

Table 266 - Trip Threshold Tolerance Values

Protection	Disable	Trip Threshold	Trip Time	Trip Threshold Tolerance	Trip Time Tolerance
L (t = k/I^2)		I_1 = 0.4-0.425-0.45-0.475-0.5-1 x I_n	t_1=3-12-24-36-48-72-108-144 s @ 3 I_1	Release between 1.05 and 1.2 I_1	±10% I_g ≤ 6 x I_n
S (t = k)	✓	I_2 = 0.6-0.8-1.2-1.8-2.4- 3-3.36-4.2-5-5.8-6.6-7.4-8.2-9-10 x I_n	with $I > I_2$ t_2=0.1-0.2-0.3-0.4-0.5-0.6-0.7-0.8 s	±7% I_g ≤ 6 x I_n; ±10% I_g > 6 x I_n	The best of ±10% or ±40 ms
S (t = k/I^2)	✓	I_2 = 0.6-0.8-1.2-1.8-2.4- 3-3.36-4.2-5-5.8-6.6-7.4-8.2-9-10 x I_n	t_2=0.1-0.2-0.3-0.4-0.5-0.6-0.7-0.8 s @ 10 I_n	±7% I_g ≤ 6 x I_n; ±10% I_g > 6 x I_n	±15% I_g ≤ 6 x I_n; ±20% I_g > 6 x I_n
I (t = k)	✓	I_3 = 1.5-2-3-4-5-6-7-8-9-10-11-12-13-14-15 x I_n	≤ 30 ms	±10%	–

For all cases not covered by Table 266, the tolerance values in Table 267 apply.

Table 267 - Tolerance Values

Protection	Trip Threshold	Trip Time
L	1.05 ≤ x I_1 ≤ 1.25	± 20%
S	± 10%	± 20%
I	± 15%	≤ 60 ms
Others	± 20%	–

1. The minimum value of this trip is 1 s regardless of curve type (self-protection)
2. These tolerances apply under the following conditions:
   - self-powered relay at full power (without start-up)
   - presence of auxiliary power supply
   - two-phase or three-phase power supply
   - preset trip time ≥ 100 ms
3. The value of this trip is ensured between 40 and 500 ms from circuit breaker closing; you must set this value yourself.
4. Curve accuracy applies from -20...+55 °C (-4...+131 °F) ambient temperature. For possible continuous ampere derating for ambient temperature above 40 °C (104 °F), consult your local Rockwell Automation sales office or Allen-Bradley distributor.
5. The right portion of the curve is determined by the interrupting rating of the circuit breaker.
6. Total clearing times shown include the response times of the trip unit, the breaker opening, and the interruption of the current.
7. For high fault current levels, an additional fixed instantaneous hardware override is provided at 18 kA.

Figure 88 - 140G-N, 140G-NS Ground Fault Protection Curve for LSIG MCCBs

- Maximum voltage: 600V AC, 50/60 Hz
- Trip unit rated current (I_n): 1200 A

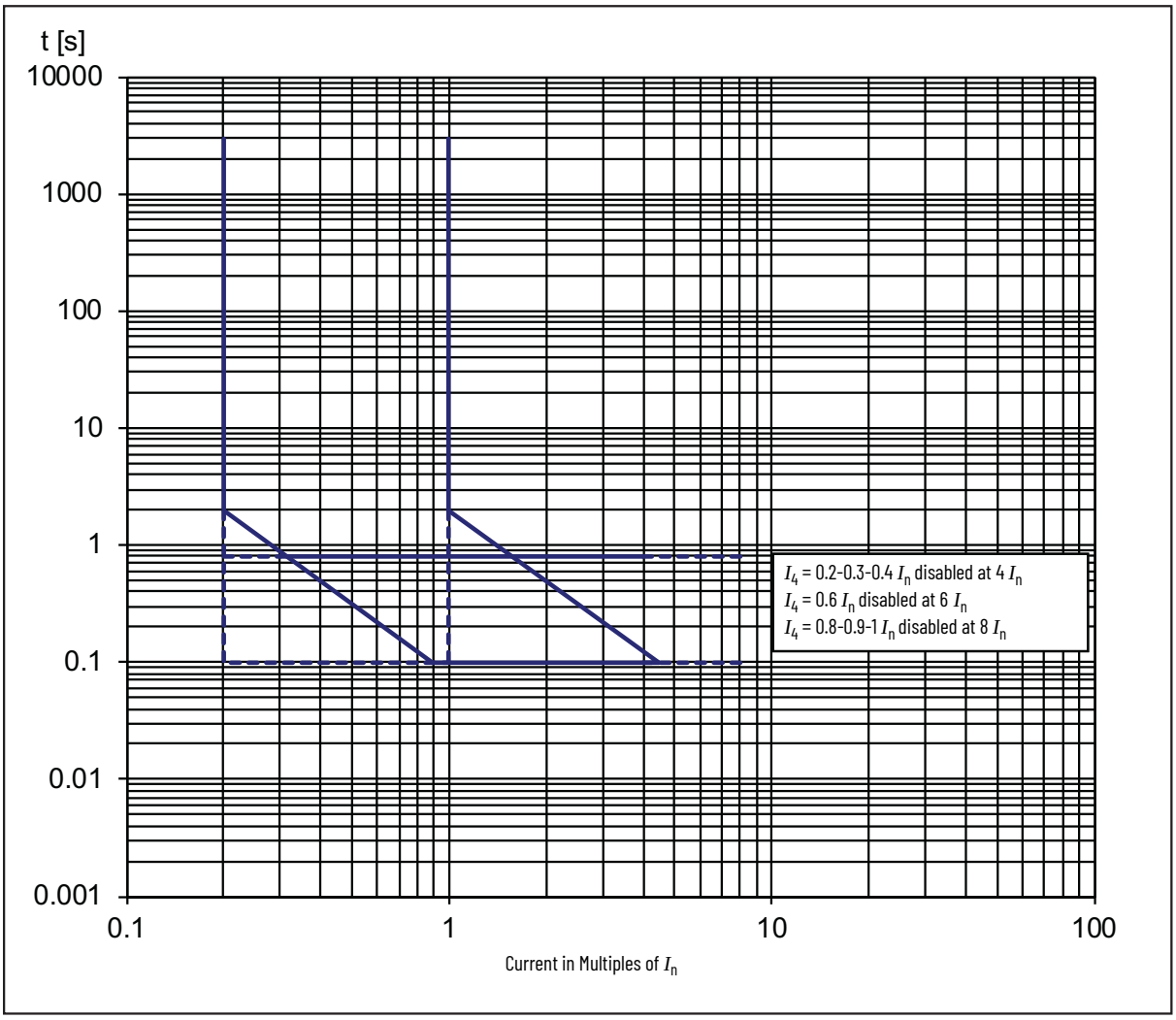

Table 268 - Trip Threshold Tolerance Values

Protection	Disable	Trip Threshold	Trip Time	Trip Threshold Tolerance	Trip Time Tolerance
G (t = k)	✓	I_4 = 0.2-0.3-0.4-0.6-0.8-0.9-1 x I_n	with $I > I_4$ t_4=0.1-0.2-0.4 s	± 7%	The best of ± 10% or ± 40 ms
G (t = k/I^2)	✓	I_4 = 0.2-0.3-0.4-0.6-0.8-0.9-1 x I_n	t_4=0.1 @ 4.47I_4 t_4=0.2 @ 3.16 I_4 t_4=0.4 @ 2.24 I_4 t_4=0.8 @ 1.58 I_4	± 7%	± 15%

For all cases not covered by Table 268, the tolerance values in Table 269 apply.

Table 269 - Tolerance Values

Protection	Trip Threshold	Trip Time
G	± 10%	± 20%
Others	± 20%	–

Ground Fault Protection (I_4) is suppressed at the following levels, where the breaker uses Instantaneous Protection (I_1) to achieve a faster response to these higher current levels

- I_4 = 0.2...0.4 I_n disabled at 4 x I_n
- I_4 = 0.6 x I_n disabled at 6 x I_n
- I_4 = 0.8...1 I_n disabled at 8 x I_n

Figure 89 - 140G-N, 140G-NS Time-current Curve for LSIG-MM MCCBs

- Maximum voltage: 600V AC, 50/60 Hz
- Trip unit rated current (I_n): 400 A, 600 A, 800 A, 1000 A, 1200 A, 1250 A (IEC)

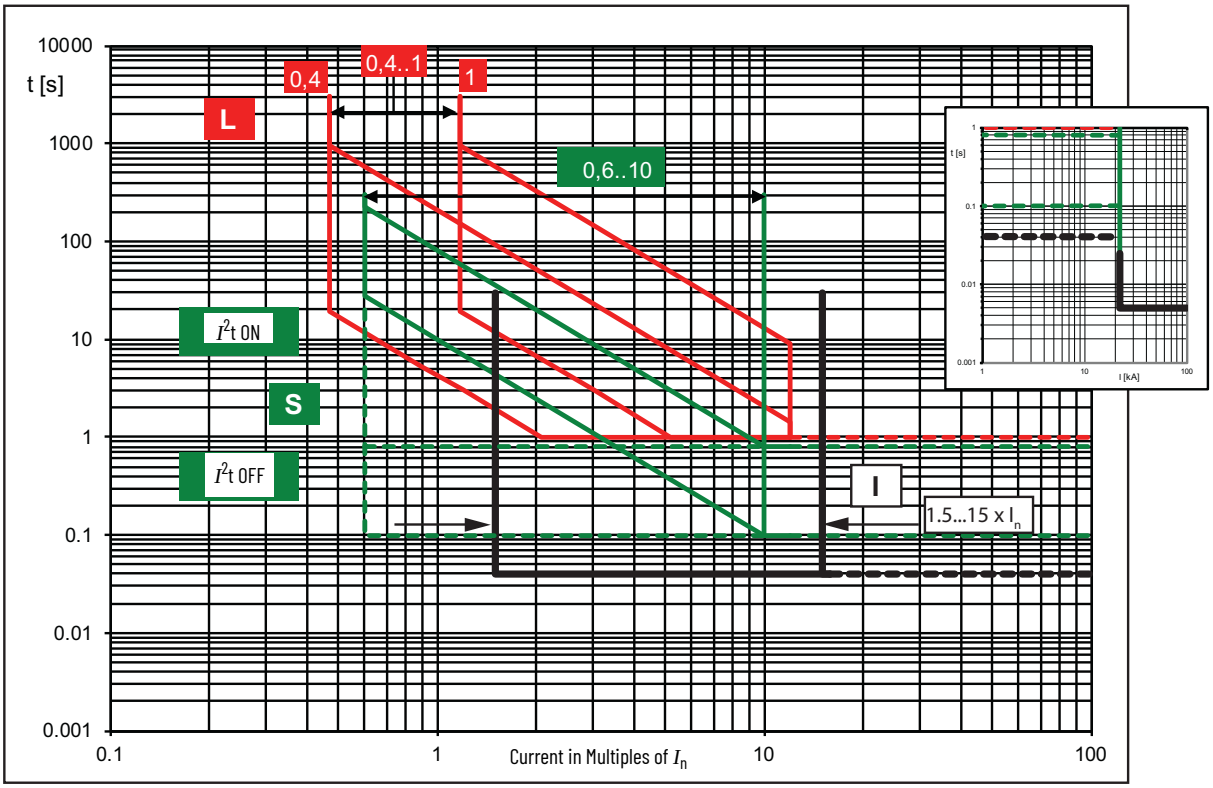

Table 270 - Trip Threshold Tolerance Values

Protection	Disable	Trip Threshold	Trip Time	Trip Threshold Tolerance	Trip Time Tolerance
L (t = k/I^2)		0.4 x I_n ≤ I_1 ≤ 1 x I_n	3 s ≤ t_1 ≤ 144 s, step 3 s t_1 @ 3 x I_1	Release between 1.05 and 1.2 I_1	±10% I_g ≤ 6 x I_n
S (t = k)	✓	0.6 x I_n ≤ I_2 ≤ 10 x I_n 0.6 x I_n ≤ I_2 startup ≤ 10 x I_n step 0.1 x I_n	Min. 0.05 s ≤ t_2 ≤ 0.8 s, step 0.01 s 0.10 s ≤ t_2 startup <30 s, step 0.01 s 0.04 s ≤ t_2 sel ≤ 0.20 s, step 0.01 s	± 7% I_g ≤ 6 x I_n; ± 10% I_g > 6 x I_n	The best of ± 10% or ± 40 ms
S (t = k/I^2)	✓	0.6 x I_n ≤ I_2 ≤ 10 x I_n; step 0.1 x I_n	0.05 s ≤ t_2 ≤ 0.8 s, step 0.01 @ 10 x I_n	± 7% I_g ≤ 6 x I_n; ± 10% I_g > 6 x I_n	± 15% I_g ≤ 6 x I_n; ± 20% I_g > 6 x I_n
I (t = k)	✓	1.5x I_n ≤ I_3 ≤ 15 x I_n; step 0.1 x I_n	≤ 30 ms	± 10%	–

For all cases not covered by Table 270, the tolerance values in Table 271 apply.

Table 271 - Tolerance Values

Protection	Trip Threshold	Trip Time
L	1.05 ≤ I_1 ≤ 1.25	± 20%
S	± 10%	± 20%
I	± 15%	≤ 60 ms
Others	± 20%	–

1. The minimum value of this trip is 1 s regardless of curve type (self-protection)
2. These tolerances apply under the following conditions:
   - self-powered relay at full power (without start-up)
   - presence of auxiliary power supply
   - two-phase or three-phase power supply
   - preset trip time ≥ 100 ms
3. The value of this trip is ensured between 40 and 500 ms from circuit breaker closing; you must set this value yourself.
4. Curve accuracy applies from -20...+55 °C (-4...+131 °F) ambient temperature. For possible continuous ampere derating for ambient temperature above 40 °C (104 °F), consult your local Rockwell Automation sales office or Allen-Bradley distributor.
5. The right portion of the curve is determined by the interrupting rating of the circuit breaker.
6. Total clearing times shown include the response times of the trip unit, the breaker opening, and the interruption of the current.
7. For high fault current levels, an additional fixed instantaneous hardware override is provided at 18 kA.

Figure 90 - 140G-N, 140G-NS Ground Fault Protection Curve for LSIG-MM MCCBs

- Maximum voltage: 600V AC, 50/60 Hz
- Trip unit rated current (I_n): 400 A, 600 A, 800 A, 1000 A, 1200 A, 1250 A (IEC)

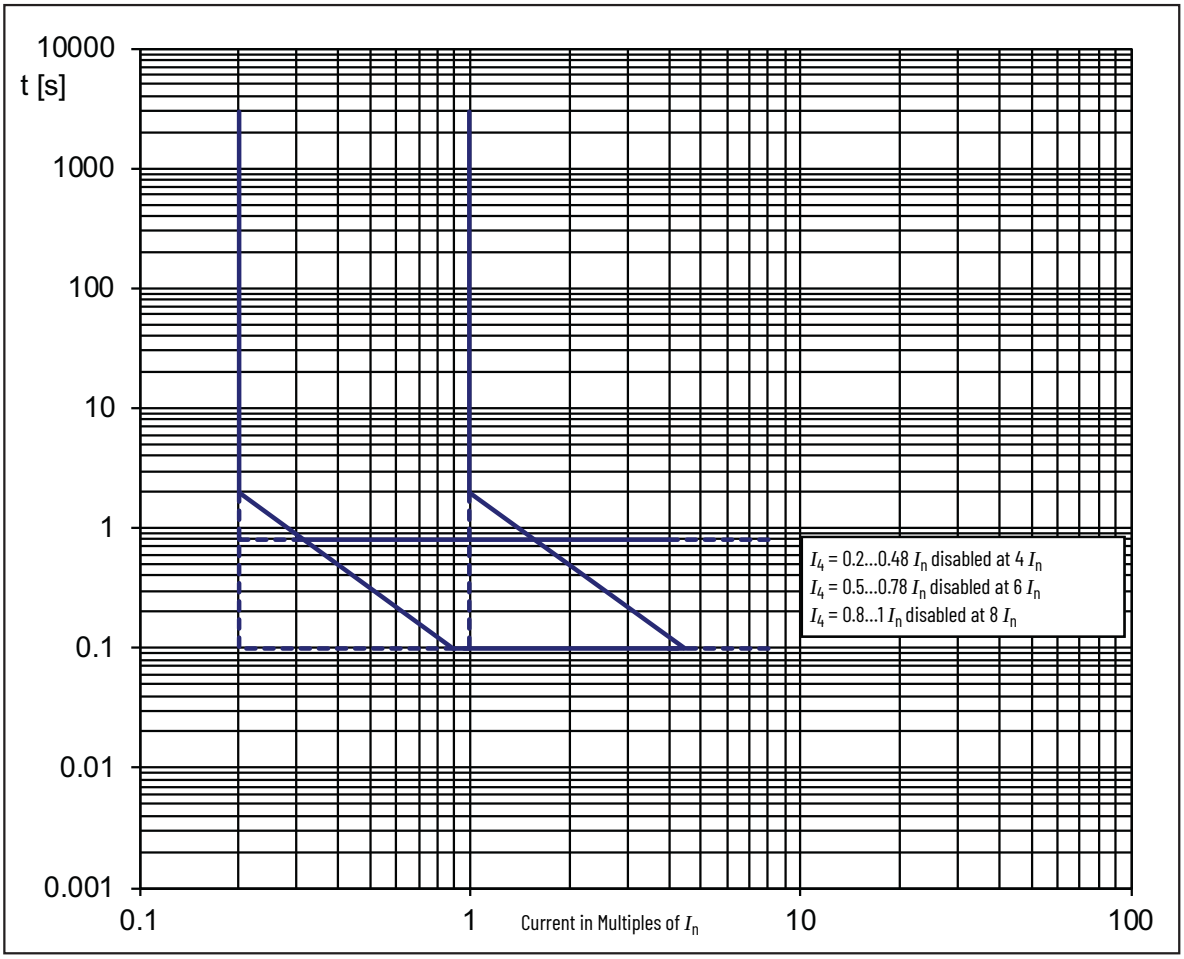

Table 272 - Trip Threshold Tolerance Values

Protection	Disable	Trip Threshold	Trip Time	Trip Threshold Tolerance	Trip Time Tolerance
G (t = k)	✓	0.2 x $I_n \le I_4 \le$ 1 x I_n step 0.02 x I_n when $I > I_4$	0.1 s ≤ t_4 ≤ 1 s, step 0.05 s 0.10 s ≤ t_4 startup ≤ 1 s, step 0.02 s 0.04 s ≤ t_4 sel ≤ 0.20 s, step 0.01 s	±7%	The best of ±10% or ±40 ms
G (t = k/I^2)	✓	0.2 x $I_n \le I_4 \le$ 1 x I_n step 0.02 x I_n	0.1 s ≤ t_4≤ 1 s, step 0.05 @ I_g > 4x I_n	±7%	±15%

For all cases not covered by Table 272, the tolerance values in Table 273 apply.

Table 273 - Tolerance Values

Protection	Trip Threshold	Trip Time
G	± 10%	± 20%
Others	± 20%	–

Ground Fault Protection (I_4) is suppressed at the following levels, where the breaker uses Instantaneous Protection (I_1) to achieve a faster response to these higher current levels

- I_4 = 0.2...0.4 I_n disabled at 4 x I_n
- I_4 = 0.6 x I_n disabled at 6 x I_n
- I_4 = 0.8...1 I_n disabled at 8 x I_n

Figure 91 - 140G-R Time-current Curve for LSIG MCCBs

- Maximum voltage: 600V AC, 50/60 Hz
- Trip unit rated current (I_n): 2000 A, 2500 A, 3000 A
  - I_n = 3000 A, instantaneous I_3 max = 12 x I_n
- Electronic trip unit. Long delay response, short delay with I^2t current ratings

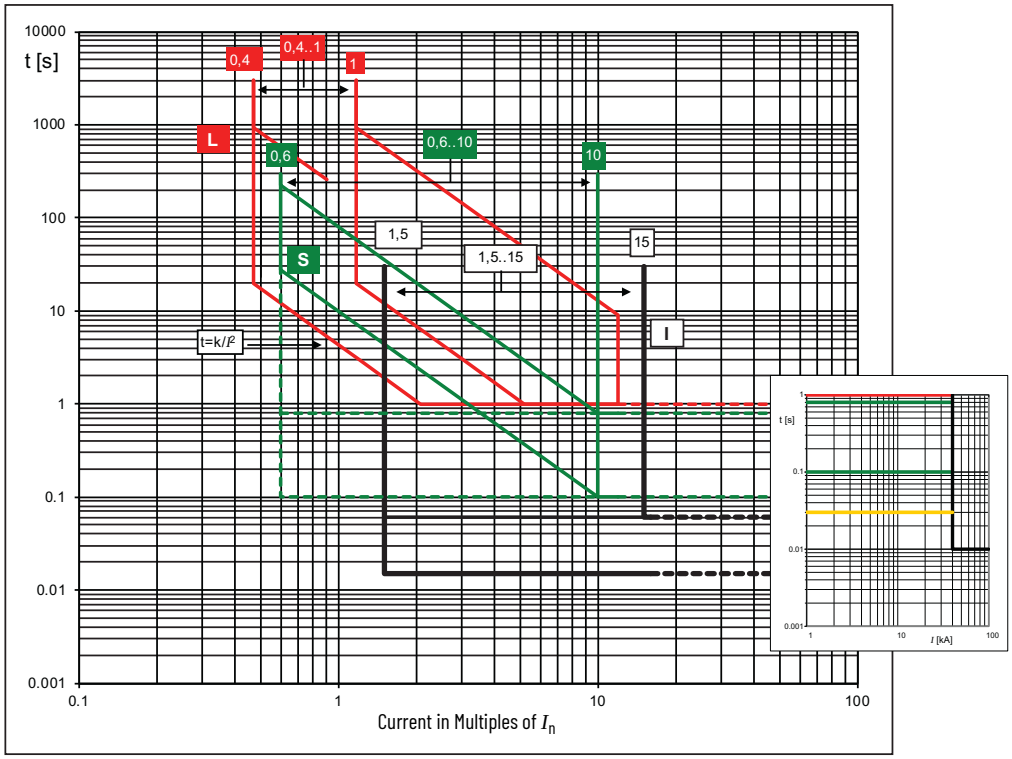

Table 274 - Trip Threshold Tolerance Values

Protection	Disable	Trip Threshold	Trip Time	Trip Threshold Tolerance	Trip Time Tolerance
L (t = k/I^2)		I_1 = 0.4-0.425-0.45-0.475-0.5-...1 x I_n	t_1 = 3-12-24-36-48-72-108-144 s @ 3 x I_1	Release between 1.05 and 1.2 I_1	±10% I_g ≤ 6 x I_n
S (t = k)	✓	I_2 = 0.6-0.8-1.2-1.8-2.4-3-3.6-4.2-5-5.8-6.6-7.4-8.2-9-10 x I_n	with $I > I_2$ t_2 = 0.1-0.2-0.3-0.4-0.5-0.6-0.7-0.8 s	±7% I_g ≤ 6 x I_n; ±10% I_g > 6 x I_n	The best of ±10% or ±40 ms
S (t = k/I^2)	✓	I_2 = 0.6-0.8-1.2-1.8-2.4-3-3.6-4.2-5-5.8-6.6-7.4-8.2-9-10 x I_n	t_2 = 0.1-0.2-0.3-0.4-0.5-0.6-0.7-0.8 s @ 10 x I_n	±7% I_g ≤ 6 x I_n; ±10% I_g > 6 x I_n	±15% I_g ≤ 6 x I_n; ±20% I_g > 6 x I_n
I (t = k)	✓	I_3= 1.5-2-3-4-5-6-7-8-9-10-11-12-13-14-15 x I_n	≤ 30 ms	±10%	–

For all cases not covered by Table 274, the tolerance values in Table 275 apply.

Table 275 - Tolerance Values

Protection	Trip Threshold	Trip Time
L	1.05 ≤ I_1 ≤ 1.25	± 20%
S	± 10%	± 20%
I	± 15%	≤ 60 ms
Others	± 20%	–

1. Min. trip value = 1 s, regardless of curve type (self-protection)
2. These tolerances apply under the following conditions:
   - self-powered relay at full power (without start-up)
   - presence of auxiliary power supply
   - two-phase or three-phase power supply
   - preset trip time ≥ 100 ms
3. The value of this trip is ensured between 40 and 500 ms from circuit breaker closing; you must set this value yourself
4. Curve accuracy applies from -20...+55 °C (-4...+131 °F) ambient temperature. For possible continuous ampere derating for ambient temperature above 40 °C (104 °F), consult your local Rockwell Automation sales office or Allen-Bradley distributor.
5. The right portion of the curve is determined by the interrupting rating of the circuit breaker.
6. Total clearing times shown include the response times of the trip unit, the breaker opening, and the interruption of the current.
7. For high fault current levels, an additional fixed instantaneous hardware override is provided at 18 kA.

Figure 92 - 140G-R Ground Fault Protection Curve for LSIG-MM MCCBs

- Maximum voltage: 600V AC, 50/60 Hz
- Trip unit rated current (I_n): 2000 A, 2500 A, 3000 A

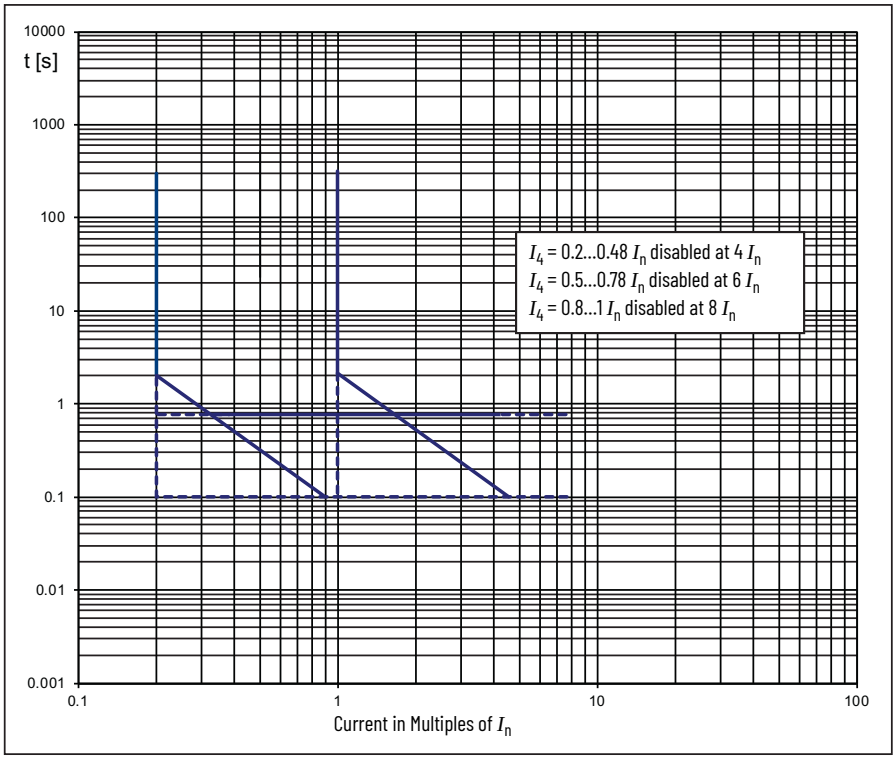

Table 276 - Trip Threshold Tolerance Values

Protection	Disable	Trip Threshold	Trip Time	Trip Threshold Tolerance	Trip Time Tolerance
G (t = k)	✓	I_4= 0.2-0.3-0.4-0.6-0.8-0.9-1 x I_n	with $I > I_4$; t_4= 0.1-0.2-0.4-0.8 s	±7%	The best of ±10% or ±40 ms
G (t = k/I^2)	✓	I_4= 0.2-0.3-0.4-0.6-0.8-0.9-1 x I_n	t_4=0.1 @ 4.47I_4; t_4=0.2 @ 3.16 I_4 t_4=0.4 @ 2.24 I_4; t_4=0.8 @ 1.58 I_4	±7%	±15%

For all cases not covered by Table 274, the tolerance values in Table 275 apply.

Table 277 - Tolerance Values

Protection	Trip Threshold	Trip Time
G	± 10%	± 20%
Others	± 20%	–

Min. trip value = 1 s, regardless of curve type (self-protection)

Ground Fault Protection (I_4) is suppressed at the following levels, where the breaker uses Instantaneous Protection (I_1) to achieve a faster response to these higher current levels

- I_4 = 0.2...0.4 I_n disabled at 4 x I_n
- I_4 = 0.6 x I_n disabled at 6 x I_n
- I_4 = 0.8...1 I_n disabled at 8 x I_n

Bulletin 140G MCCB Let-through Curves

Figure 93 - Total Let-through Energy Curve for MCCBs, 240V

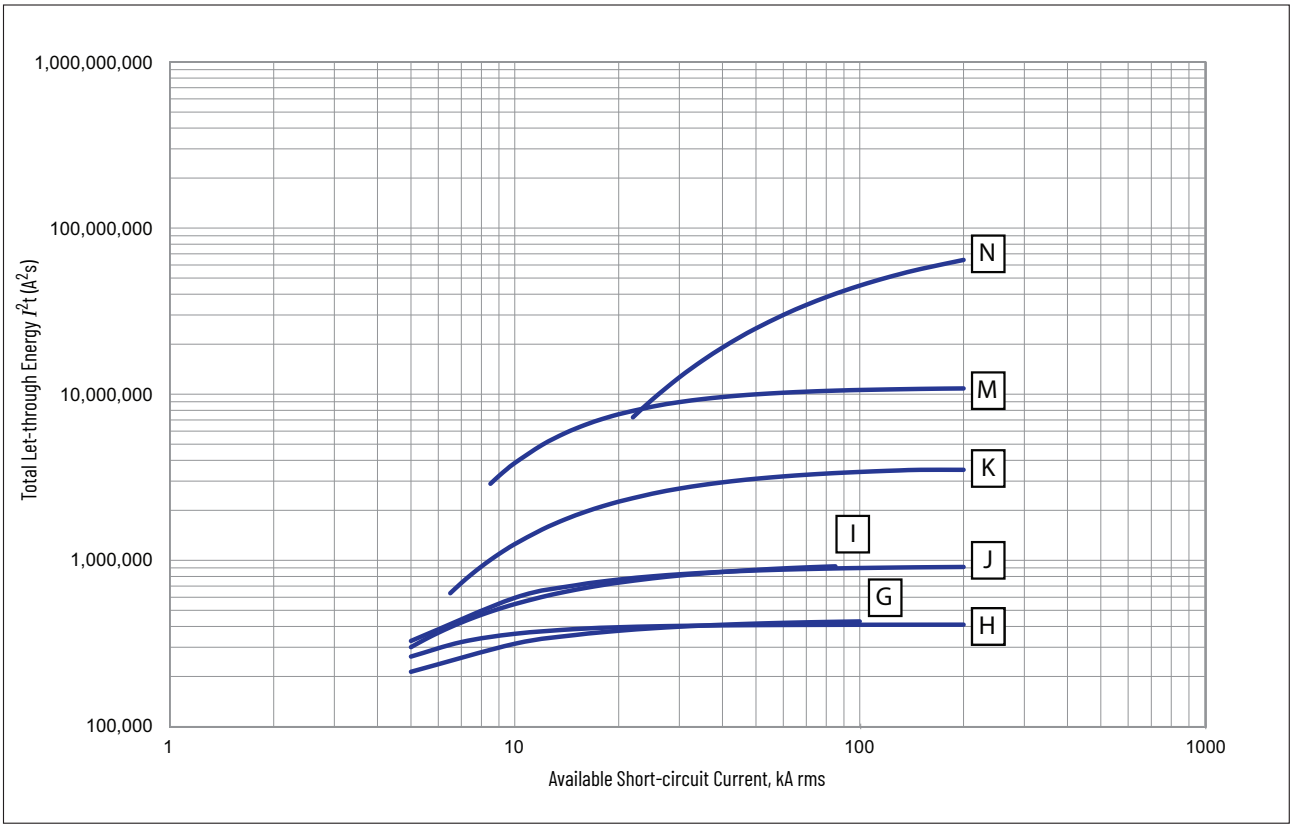

Figure 94 - Peak Let-through Current Curve for MCCBs, 240V

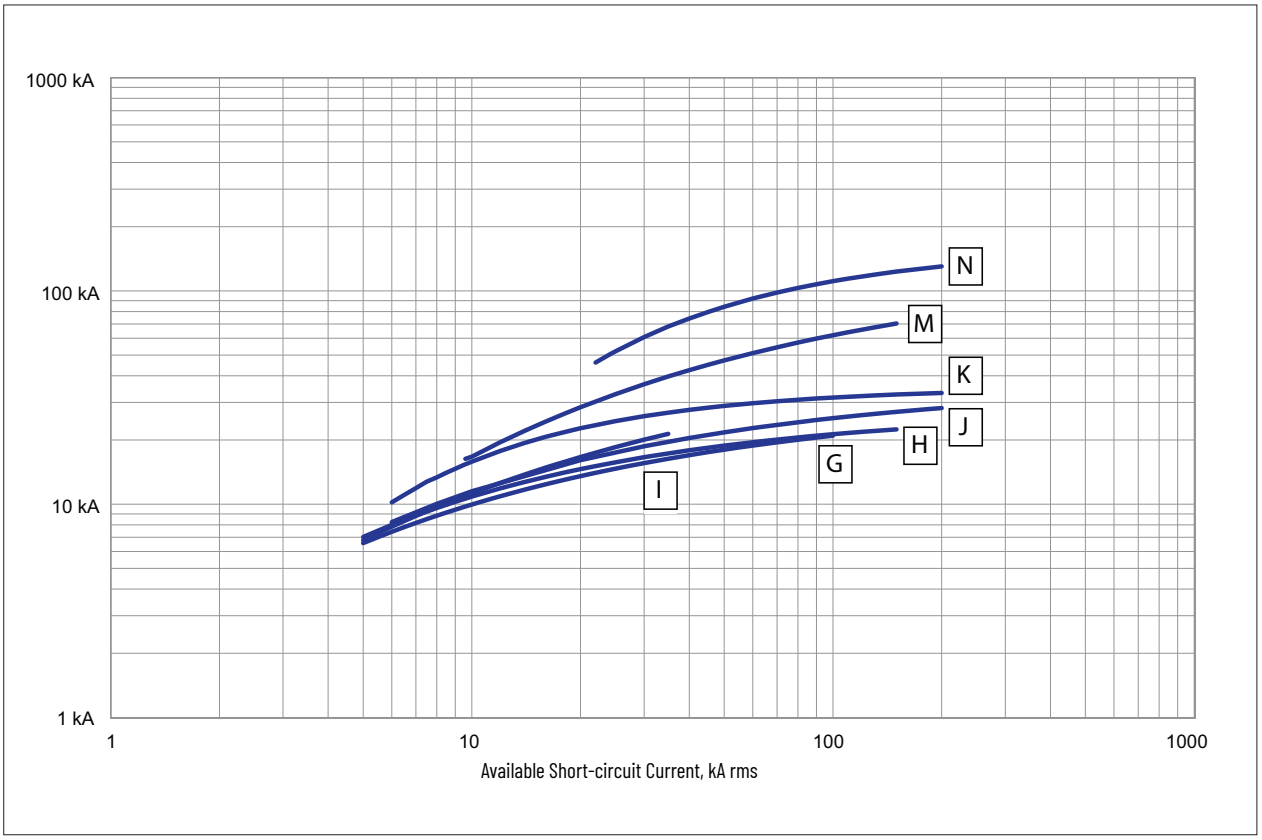

Figure 95 - Total Let-through Energy Curve for MCCBs, 415V

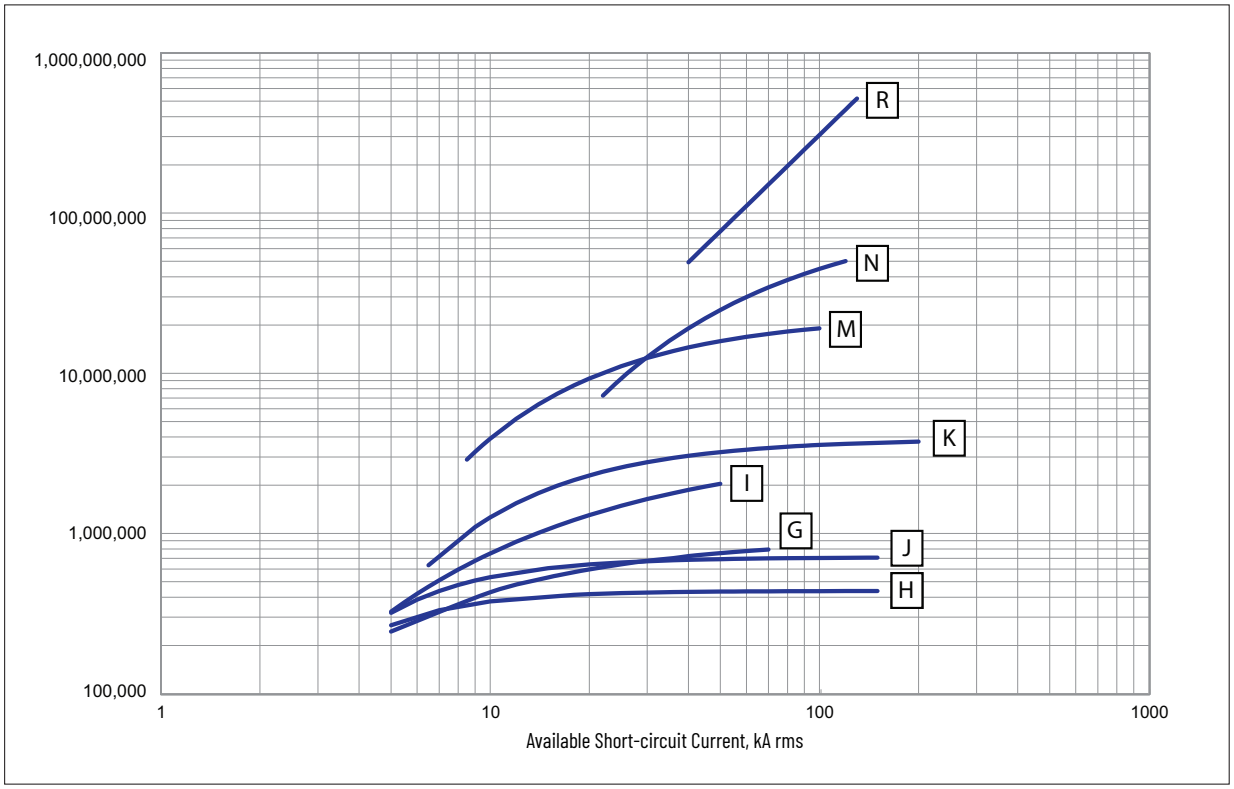

Figure 96 - Peak Let-through Current Curve for MCCBs, 415V

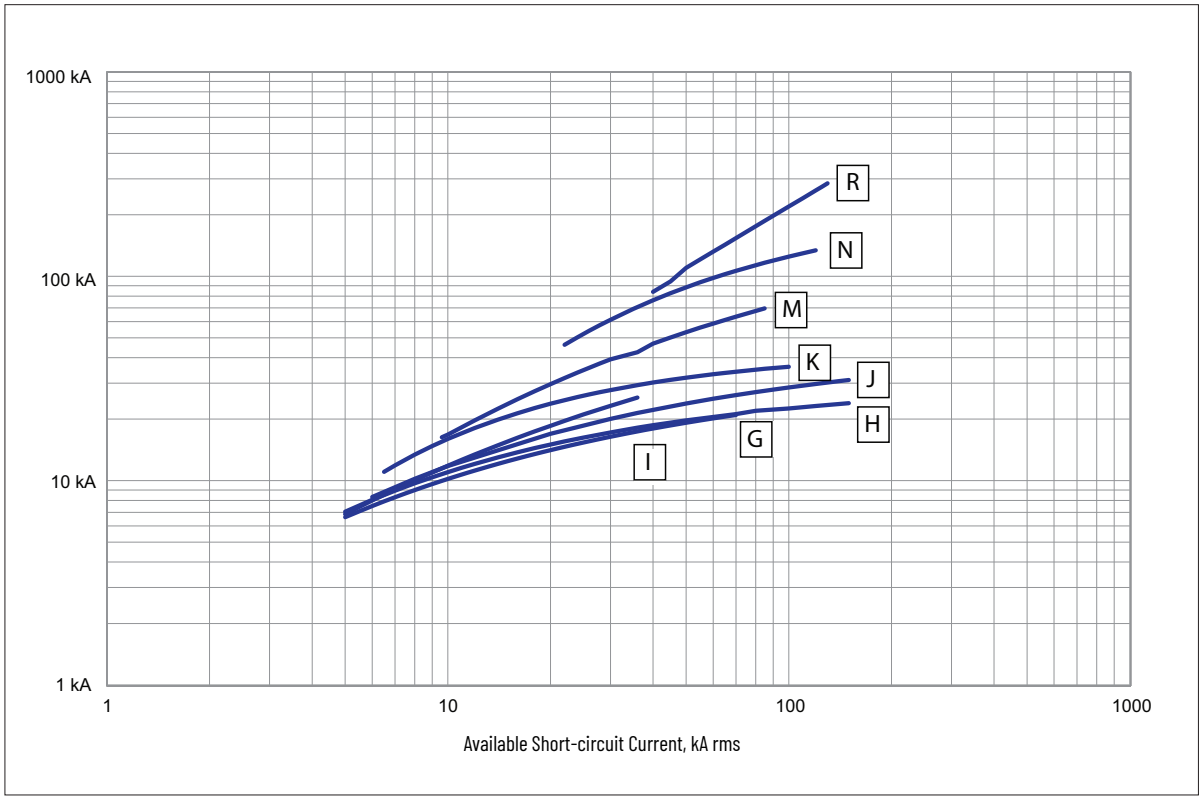

Figure 97 - Total Let-through Energy Curve for MCCBs, 480V

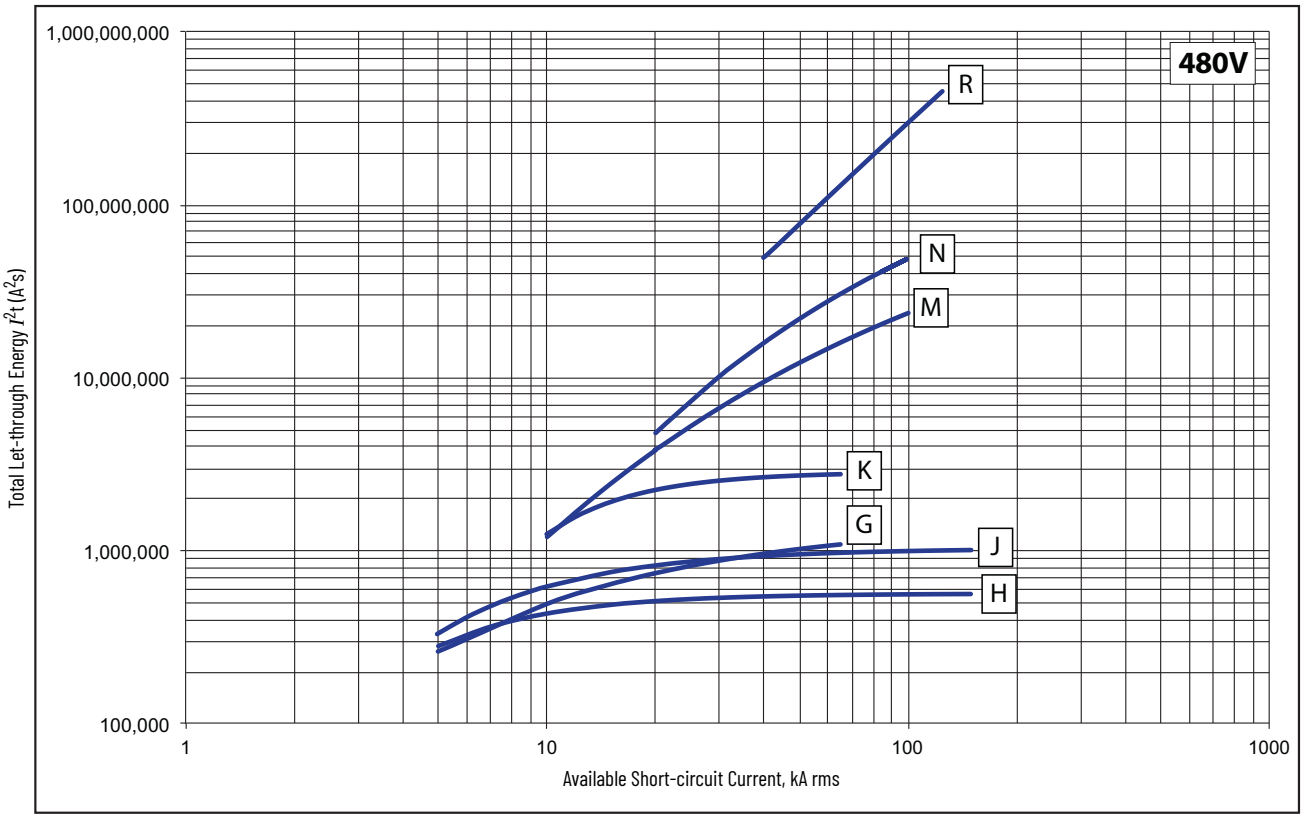

Figure 98 - Peak Let-through Current Curve for MCCBs, 480V

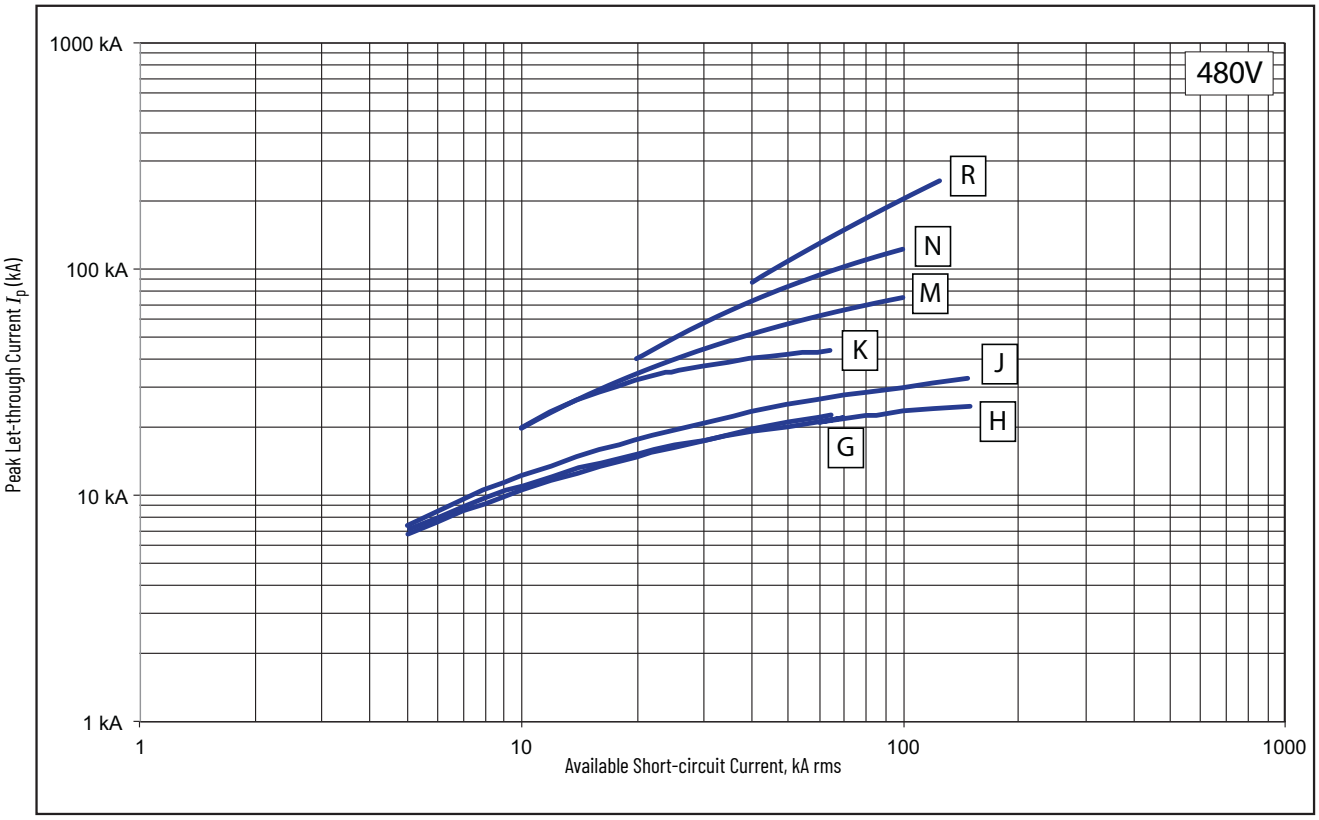

Figure 99 - Total Let-through Energy Curve for MCCBs, 500V

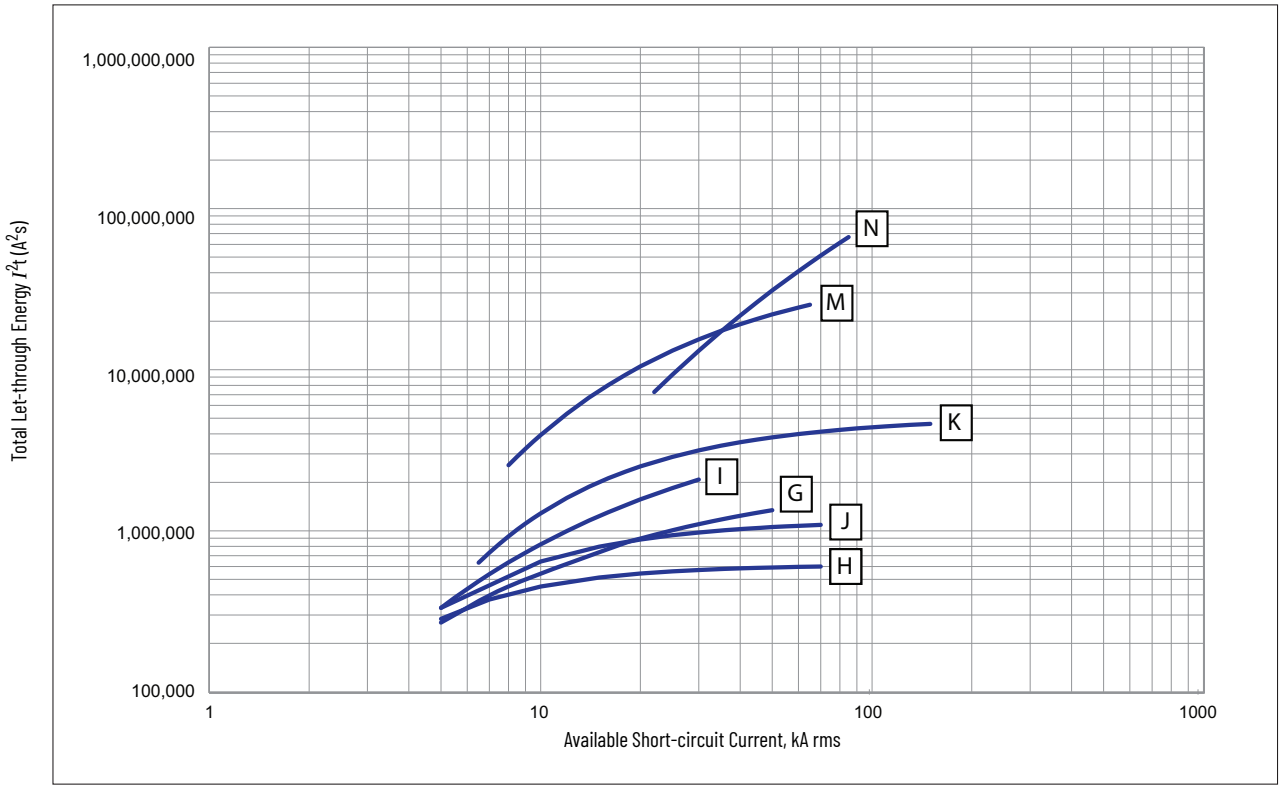

Figure 100 - Peak Let-through Current Curve for MCCBs, 500V

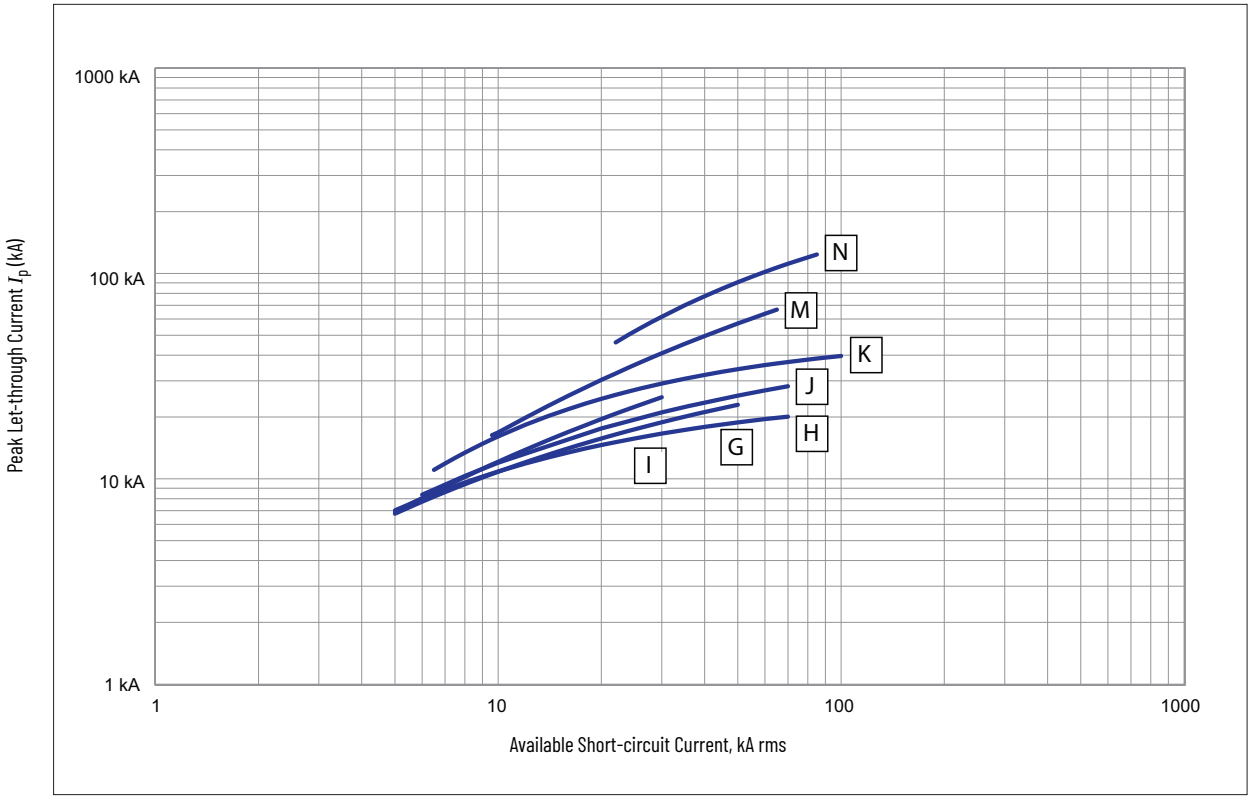

Figure 101 - Total Let-through Energy Curve for MCCBs, 600V

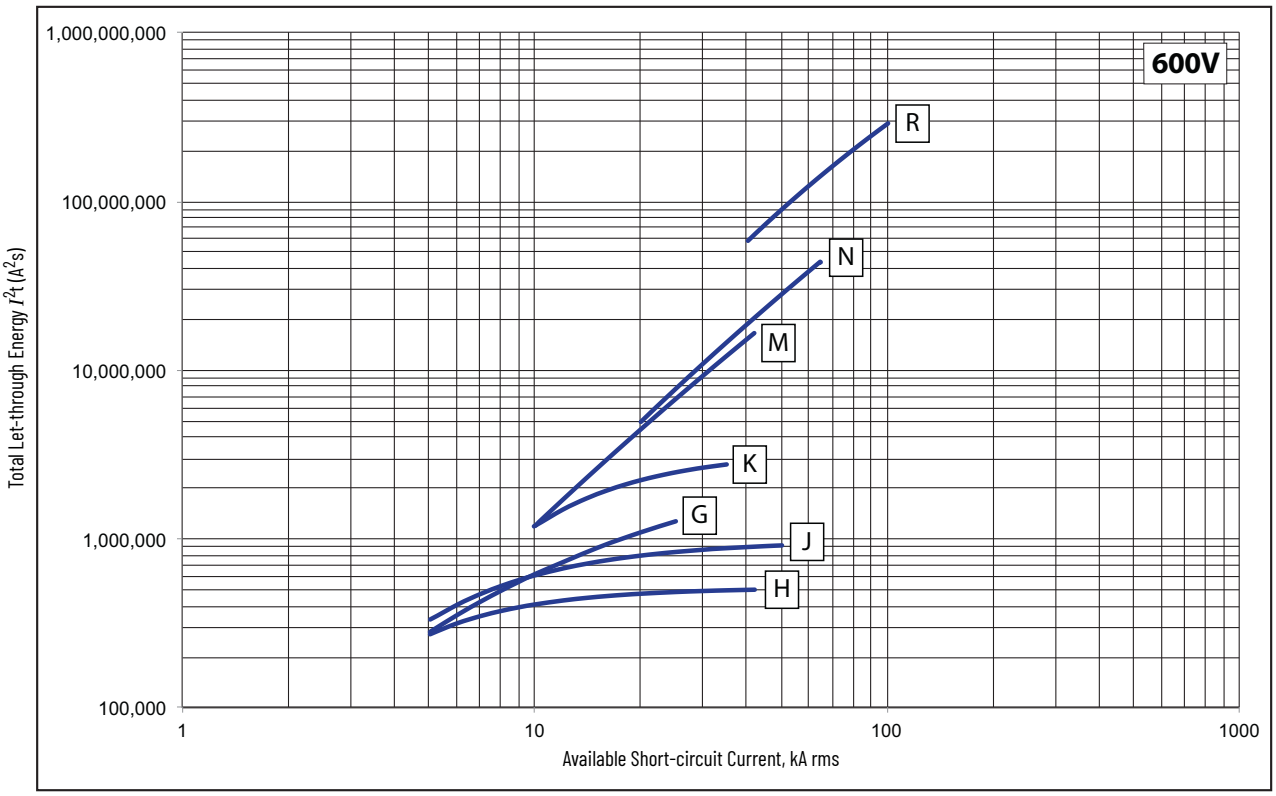

Figure 102 - Peak Let-through Current Curve for MCCBs, 600V

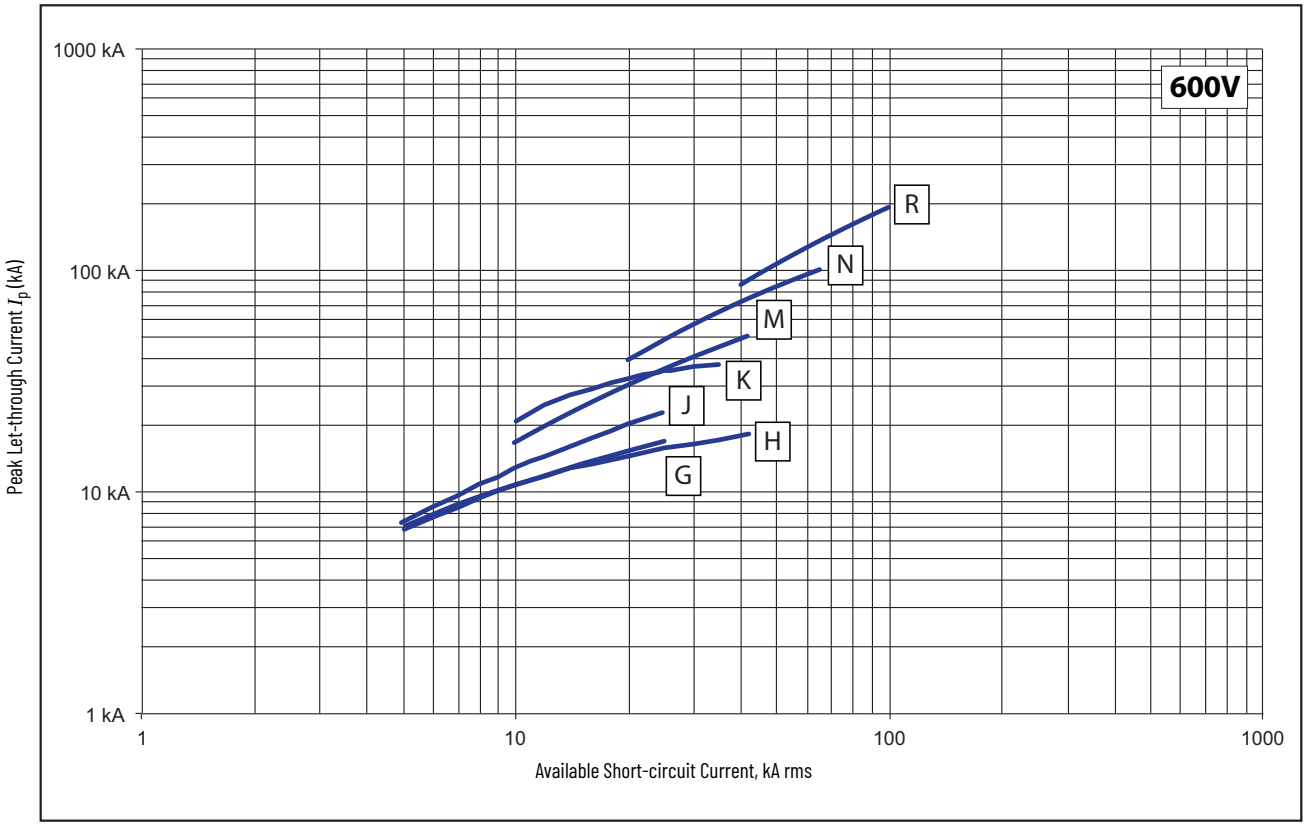

Figure 103 - Total Let-through Energy Curve for MCCBs, 690V

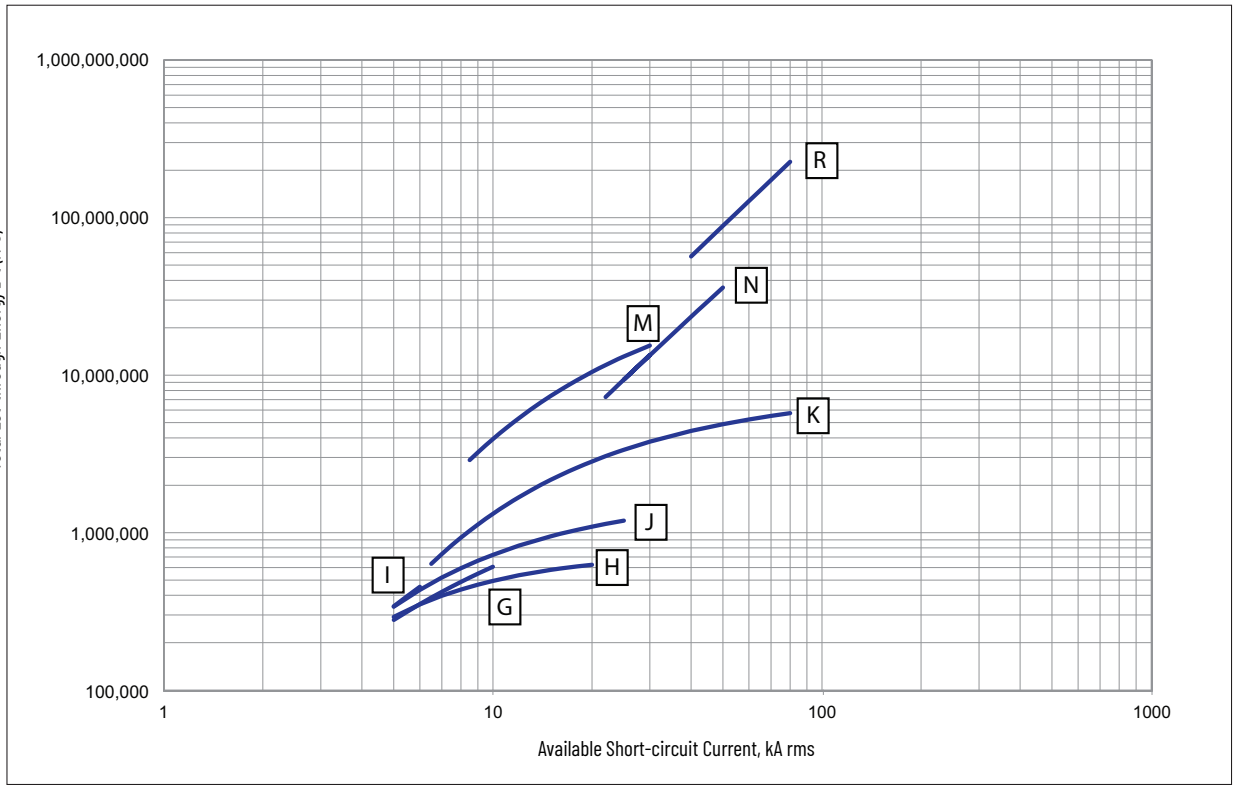

Figure 104 - Peak Let-through Current Curve for MCCBs, 690V

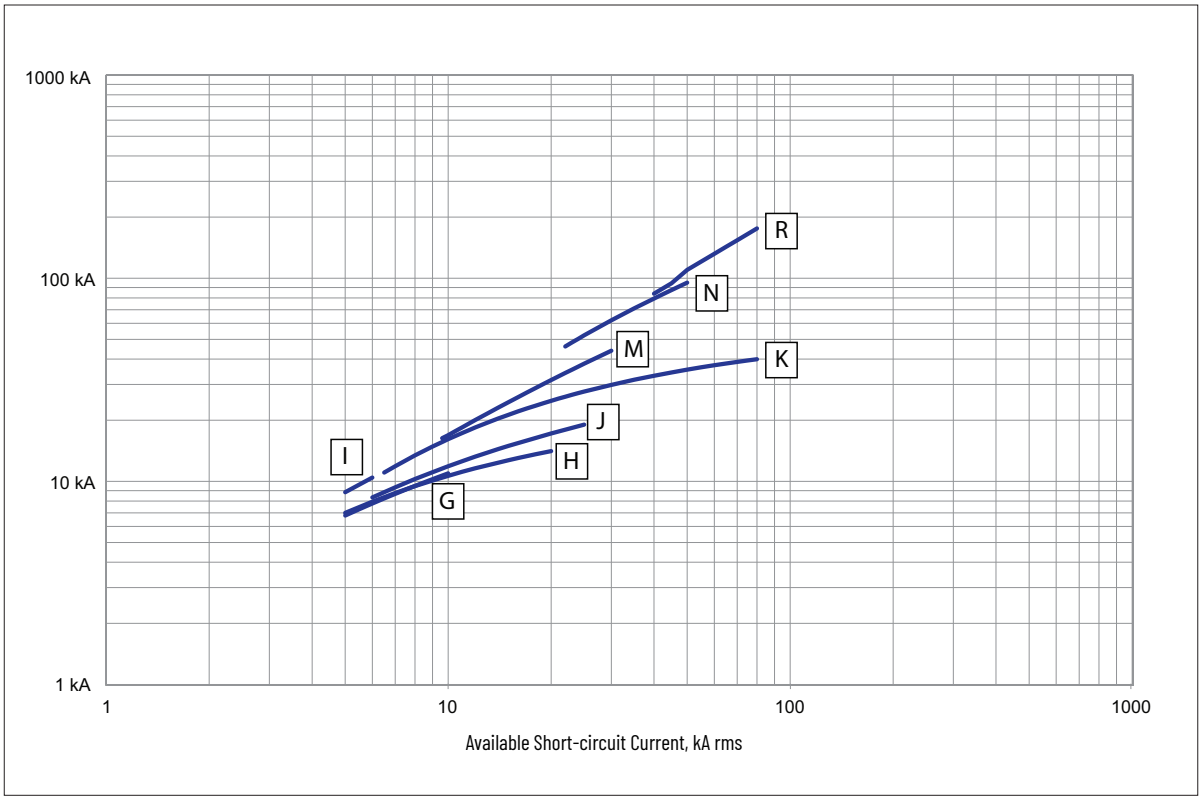

Bulletin 140G Current-limiting MCCB Total Let-through Curves

Figure 105 - Total Let-through Energy Curve for 65 kA Current-limiting MCCBs, 480V

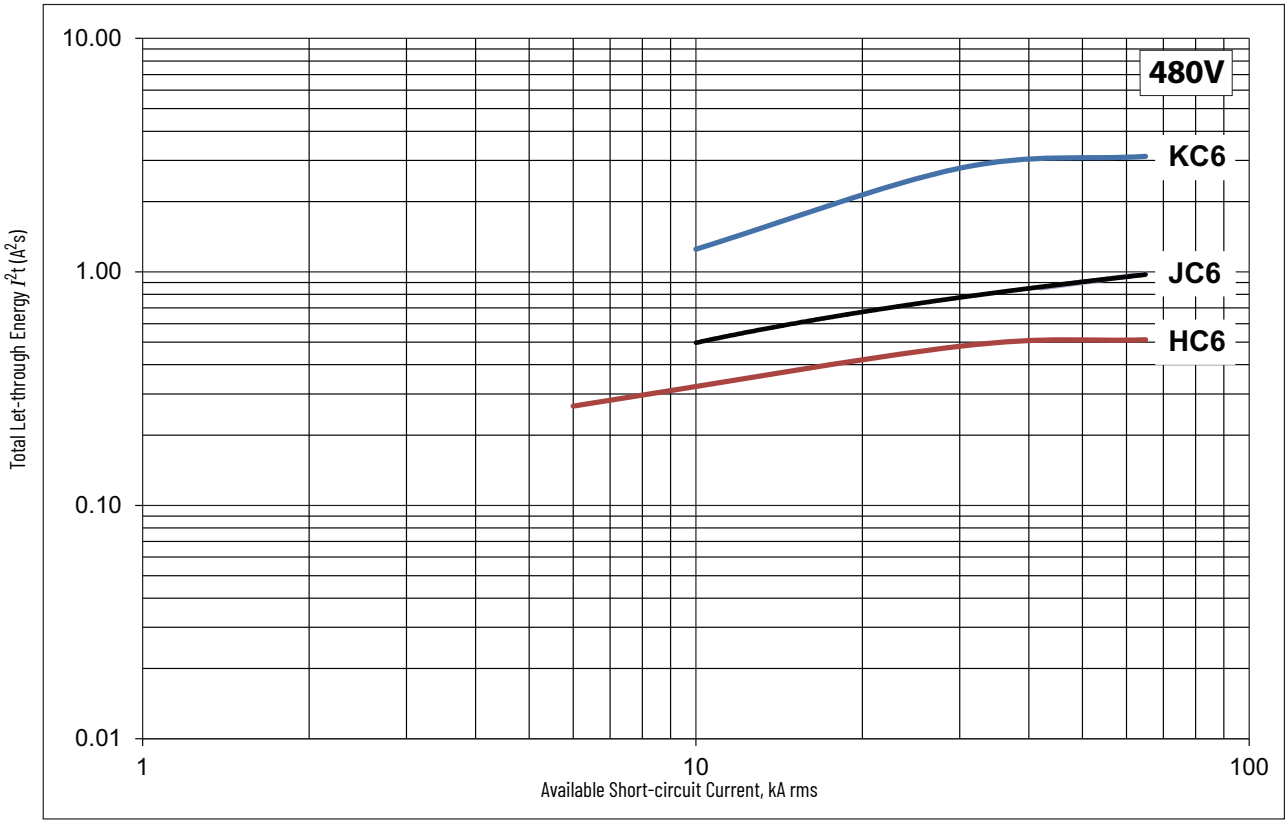

Figure 106 - Peak Let-through Current Curve for 65 kA Current-limiting MCCBs, 480V

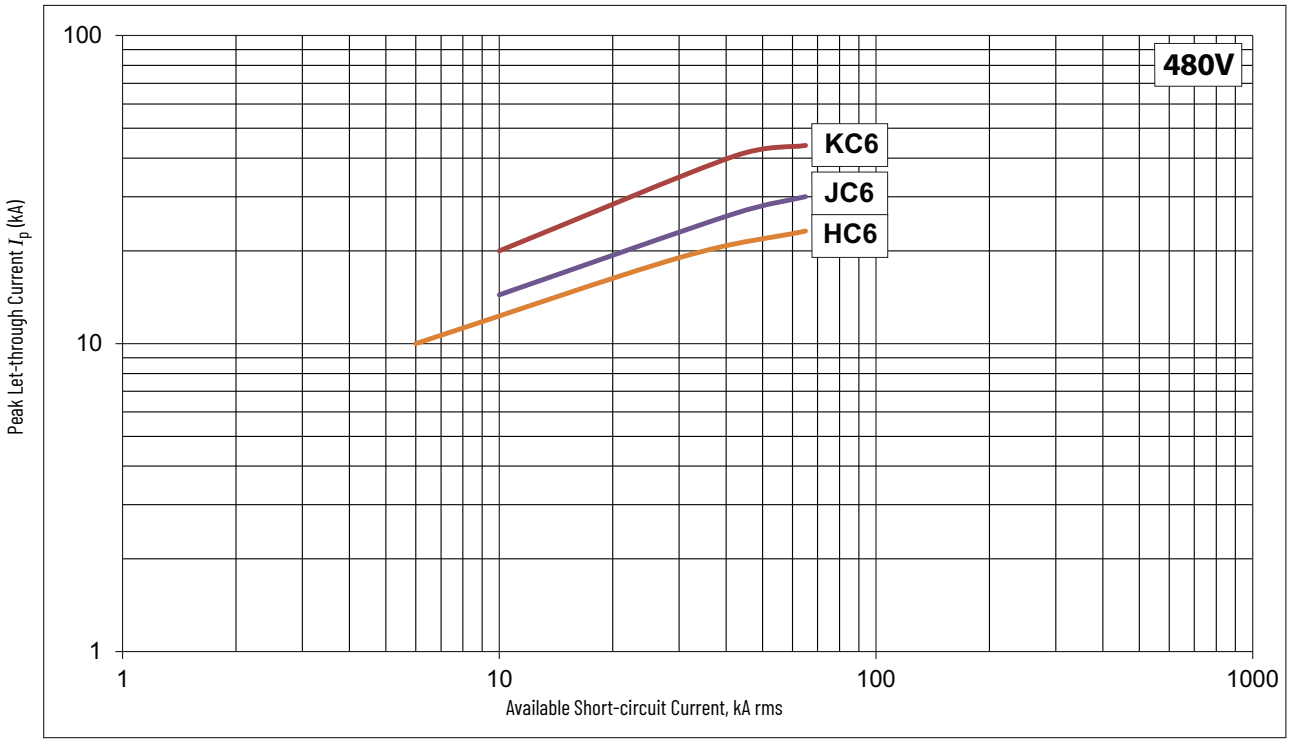

Figure 107 - Total Let-through Energy Curve for 100 kA Current-limiting MCCBs, 480V

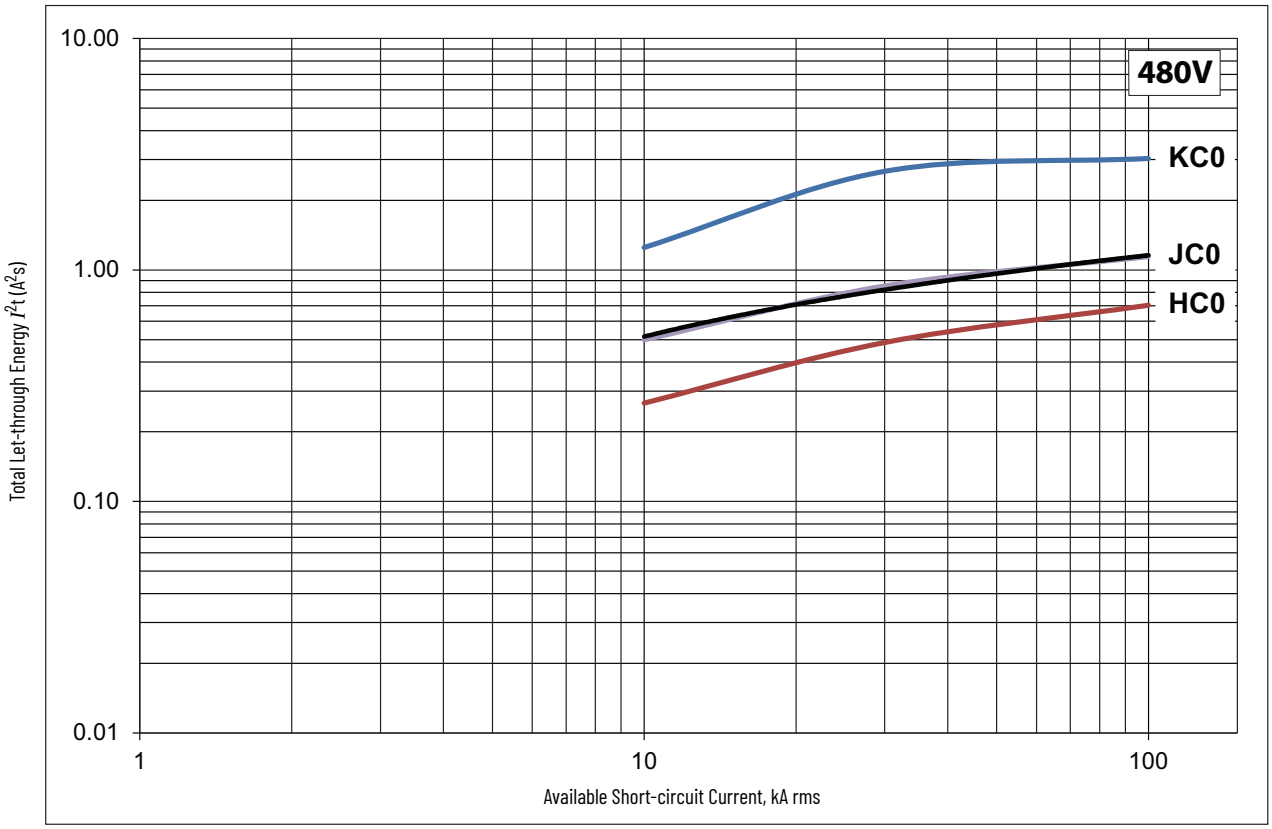

Figure 108 - Peak Let-through Current Curve for 100 kA Current-limiting MCCBs, 480V

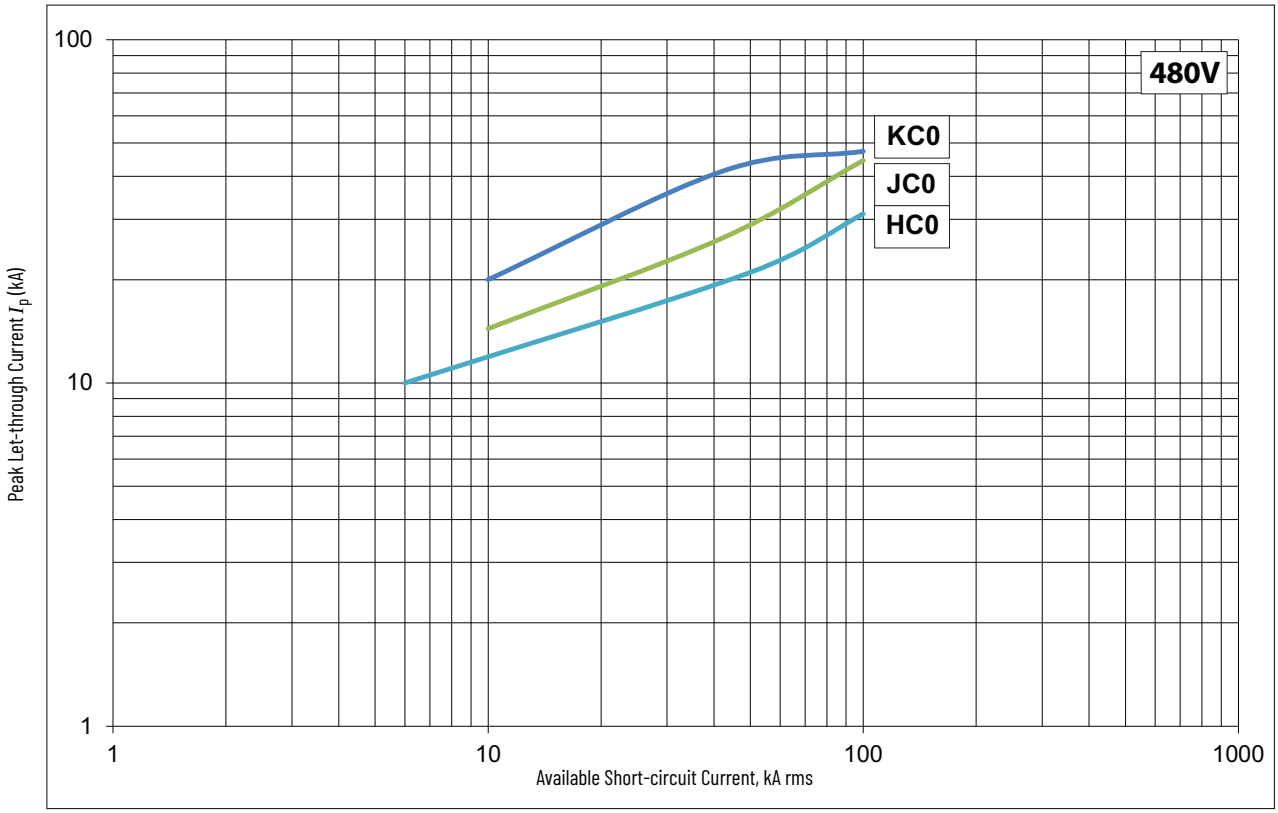

Figure 109 - Total Let-through Energy Curve for 65 kA Current-limiting MCCBs, 600V

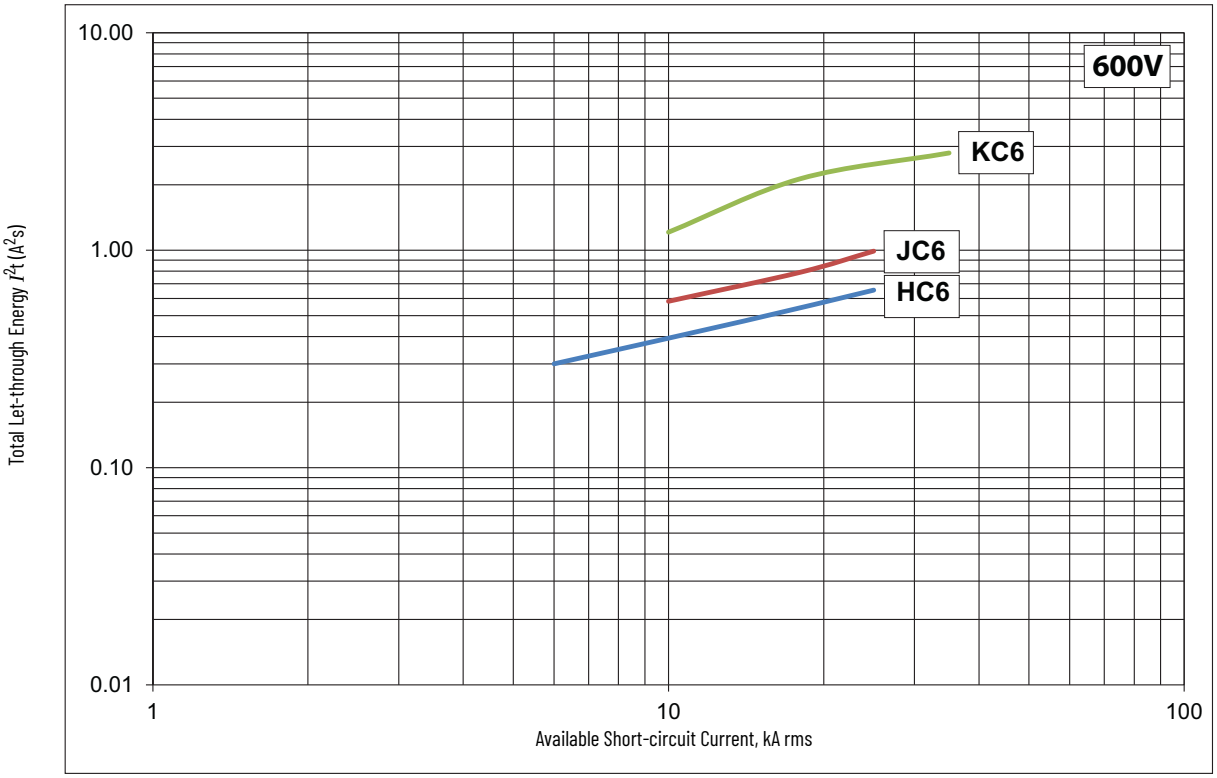

Figure 110 - Peak Let-through Current Curve for 65 kA Current-limiting MCCBs, 600V

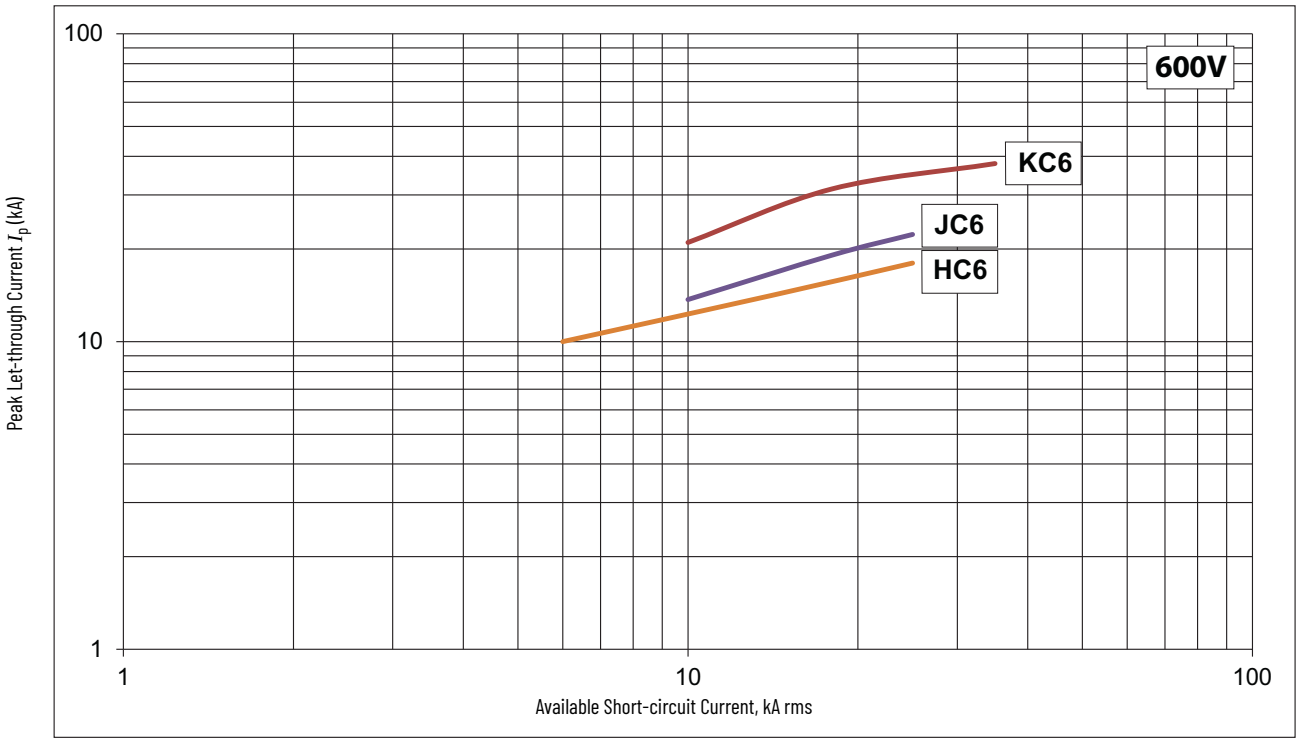

Figure 111 - Total Let-through Energy Curve for 100 kA Current-limiting MCCBs, 600V

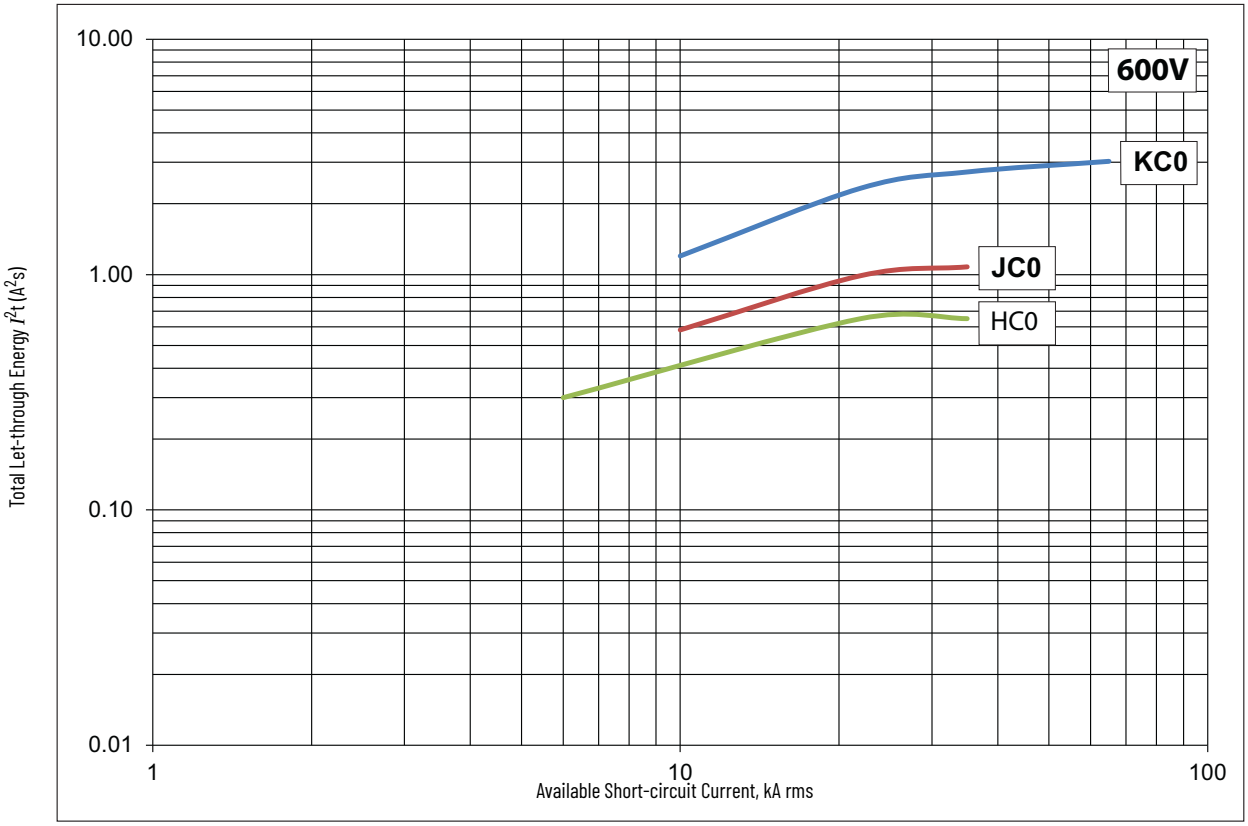

Figure 112 - Peak Let-through Current Curve for 100 kA Current-limiting MCCBs, 600V

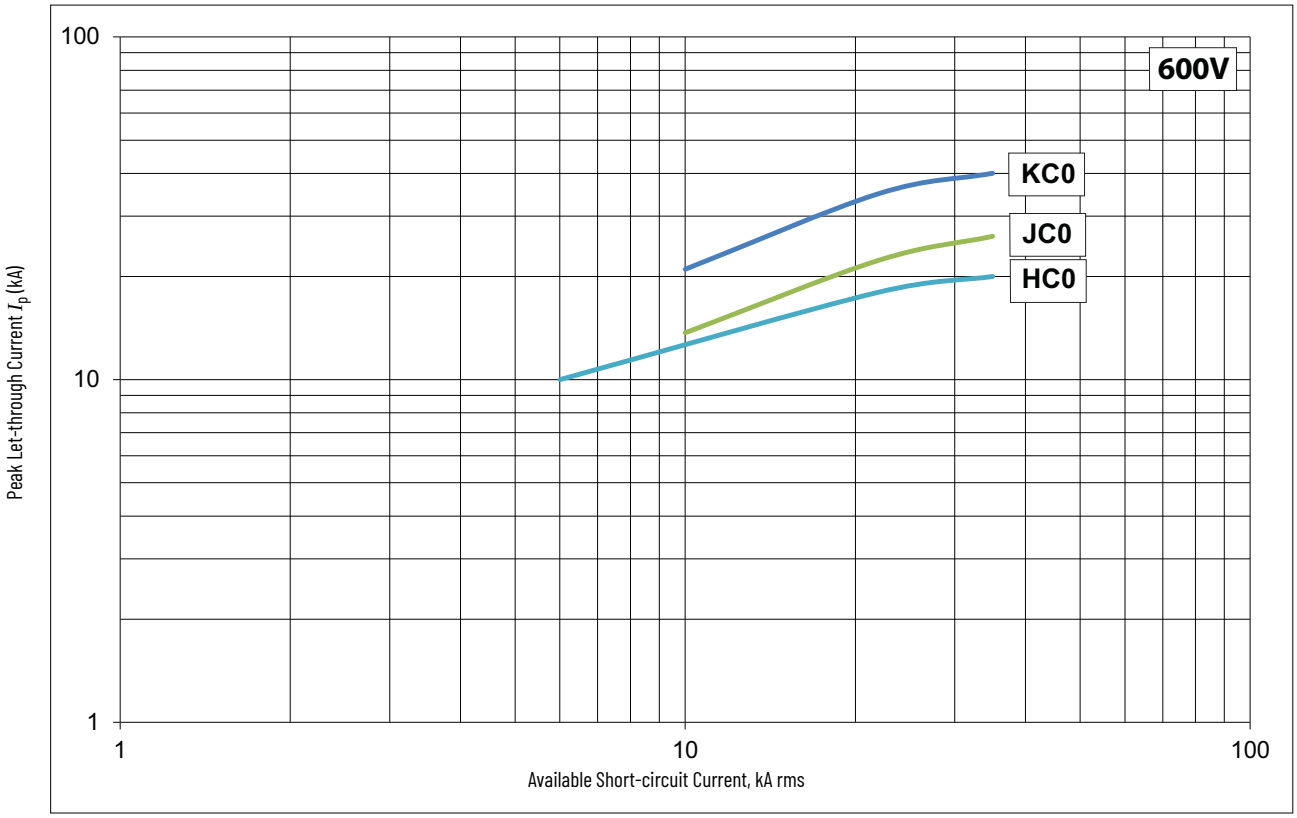

Bulletin 140MG Motor Circuit Protectors Trip Curves

Motor circuit protectors are for use only in combination controllers. For DC applications, pick-up settings are approximately 40% higher.

Figure 113 - 140MG-G Time-current Curve

- Maximum voltage: 600Y/347V AC, (50/60 Hz)
- Maximum current: 3...125 A

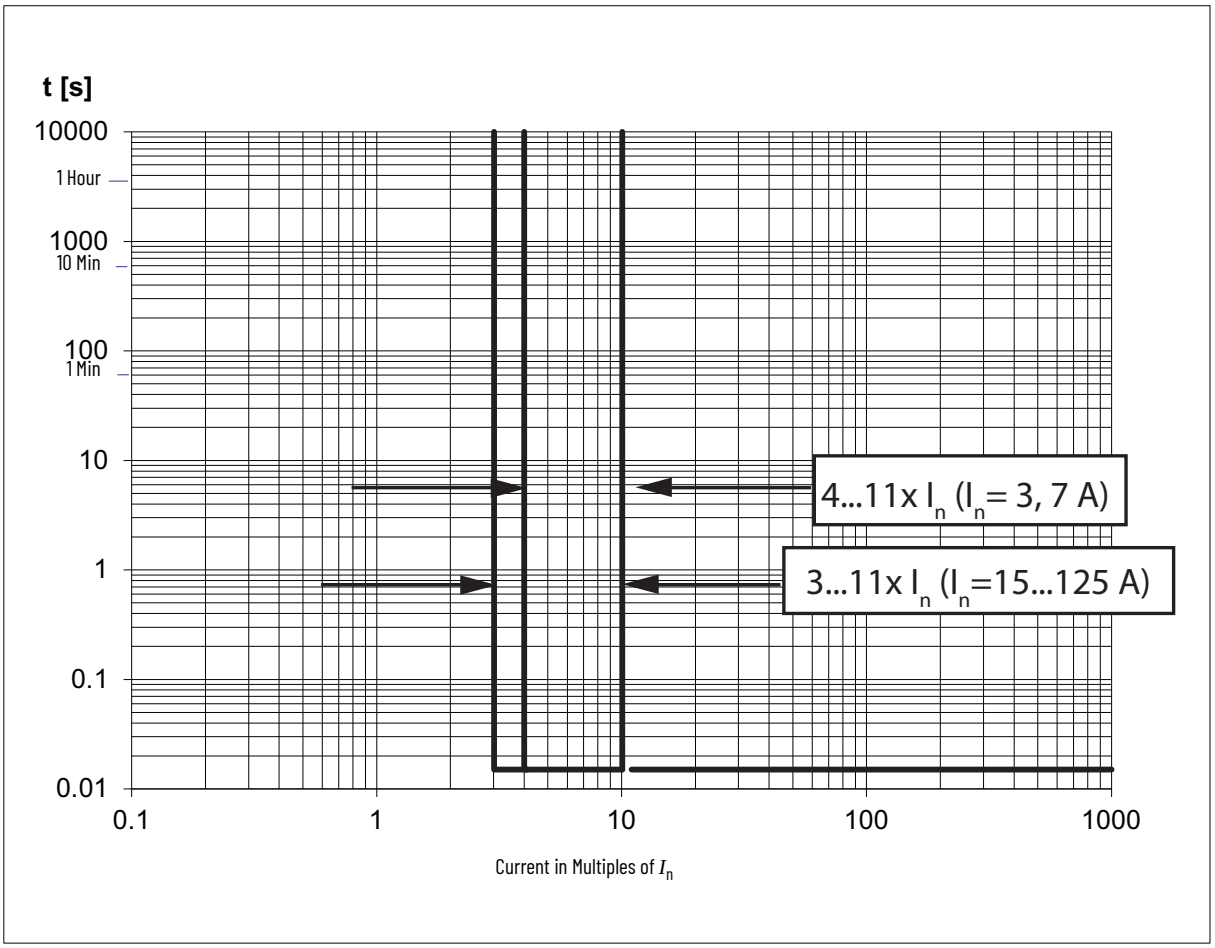

Table 278 - Instantaneous Pick-up Setting (Amperes)

Catalog Number	A	B	C	D	E	F	G	H	I
140MG-G8P-B30	12	15	17	20	23	25	28	30	33
140MG-G8P-B70	28	34	40	46	53	59	65	71	77
140MG-G8P-C15	45	60	75	90	105	120	135	150	165
140MG-G8P-C30	90	120	150	180	210	240	270	300	330
140MG-G8P-C50	150	200	250	300	350	400	450	500	550
140MG-G8P-C70	210	280	350	420	490	560	630	700	770
140MG-G8P-C80	240	320	400	480	560	640	720	800	880
140MG-G8P-D10	300	400	500	600	700	800	900	1000	1100
140MG-G8P-D12	375	500	625	750	875	1000	1125	1250	1375

Table 279 - Typical Trip Unit Nameplate(1)

I_3 [A]								
A	B	C	D	E	F	G	H	I
300	400	500	600	700	800	900	1000	1100

(1) See Table 278 for trip setting values.

Figure 114 - 140MG-H Time-current Curve

- Maximum voltage: 600V AC, (50/60 Hz)
- Maximum current: 3...100 A

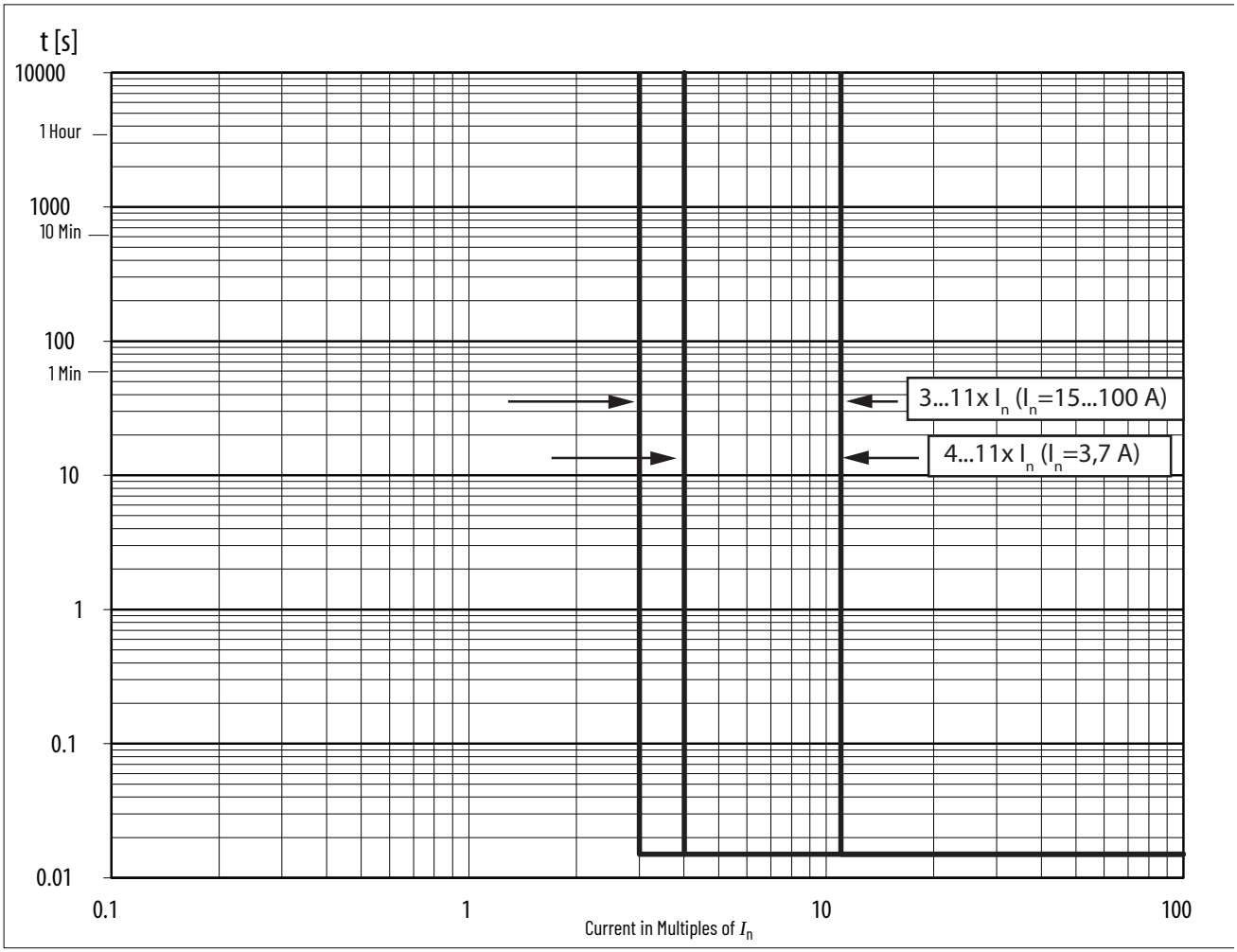

Table 280 - Instantaneous Pick-up Setting (Amperes)

Catalog Number	A	B	C	D	E	F	G	H	I
140MG-H8P-B30	9	12	15	18	21	24	27	30	33
140MG-H8P-B70	21	28	35	42	49	56	63	70	77
140MG-H8P-C15	45	60	75	90	105	120	135	150	165
140MG-H8P-C30	90	120	150	180	210	240	270	300	330
140MG-H8P-C50	150	200	250	300	350	400	450	500	550
140MG-H8P-C70	210	280	350	420	490	560	630	700	770
140MG-H8P-C80	240	320	400	480	560	640	720	800	880
140MG-H8P-D10	300	400	500	600	700	800	900	1000	1100

Table 281 - Typical Trip Unit Nameplate(1)

I_3 [A]								
A	B	C	D	E	F	G	H	I
300	400	500	600	700	800	900	1000	1100

(1) See Table 280 for trip setting values.

Figure 115 - 140MG-H Time-current Curve

- Maximum voltage: 600V AC, (50/60 Hz)
- Maximum current: 125 A

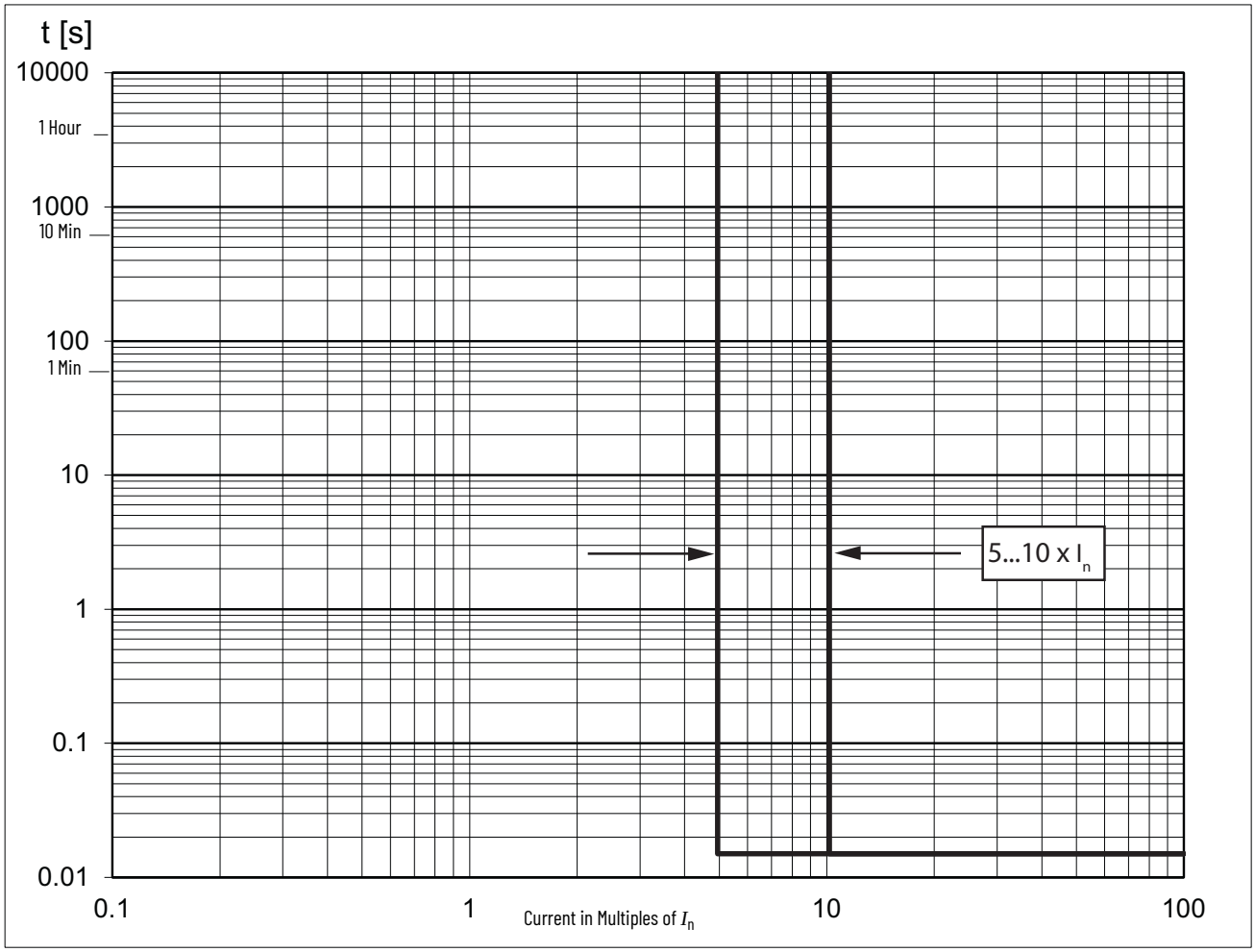

Table 282 - Typical Trip Unit Nameplate

I_3 [A]								
A	B	C	D	E	F	G	H	I
625	703	781	859	938	1016	1094	1172	1250

Figure 116 - 140MG-I Time-current Curve

- Maximum voltage: 600Y/347V AC, (50/60 Hz)
- Maximum current: 100...150 A

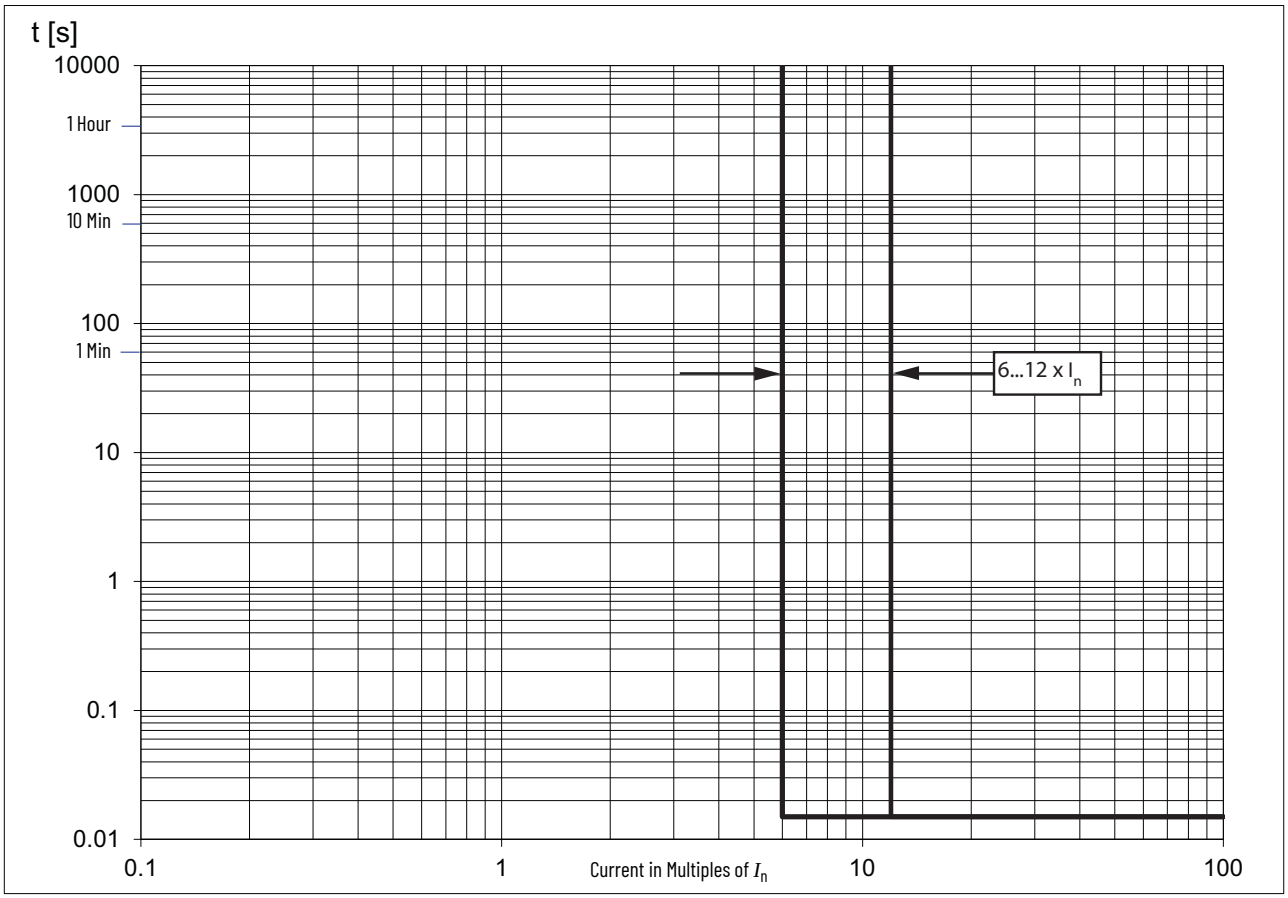

Table 283 - Instantaneous Pick-up Setting (Amperes)

Catalog Number	A	B	C	D	E	F	G	H	I
140MG-I8P-D10	600	675	750	825	900	975	1050	1125	1200
140MG-I8P-D11	660	743	825	908	990	1073	1155	1238	1320
140MG-I8P-D12	750	844	938	1031	1125	1219	1313	1406	1500
140MG-I8P-D15	900	1013	1125	1238	1350	1463	1575	1688	1800

Table 284 - Typical Trip Unit Nameplate(1)

I_3 [A]								
A	B	C	D	E	F	G	H	I
600	675	750	825	900	975	1050	1125	1200

(1) See Table 283 for trip setting values.

Figure 117 - 140MG-J Time-current Curve

- Maximum voltage: 600V AC, (50/60 Hz)
- Maximum current: 150...200 A

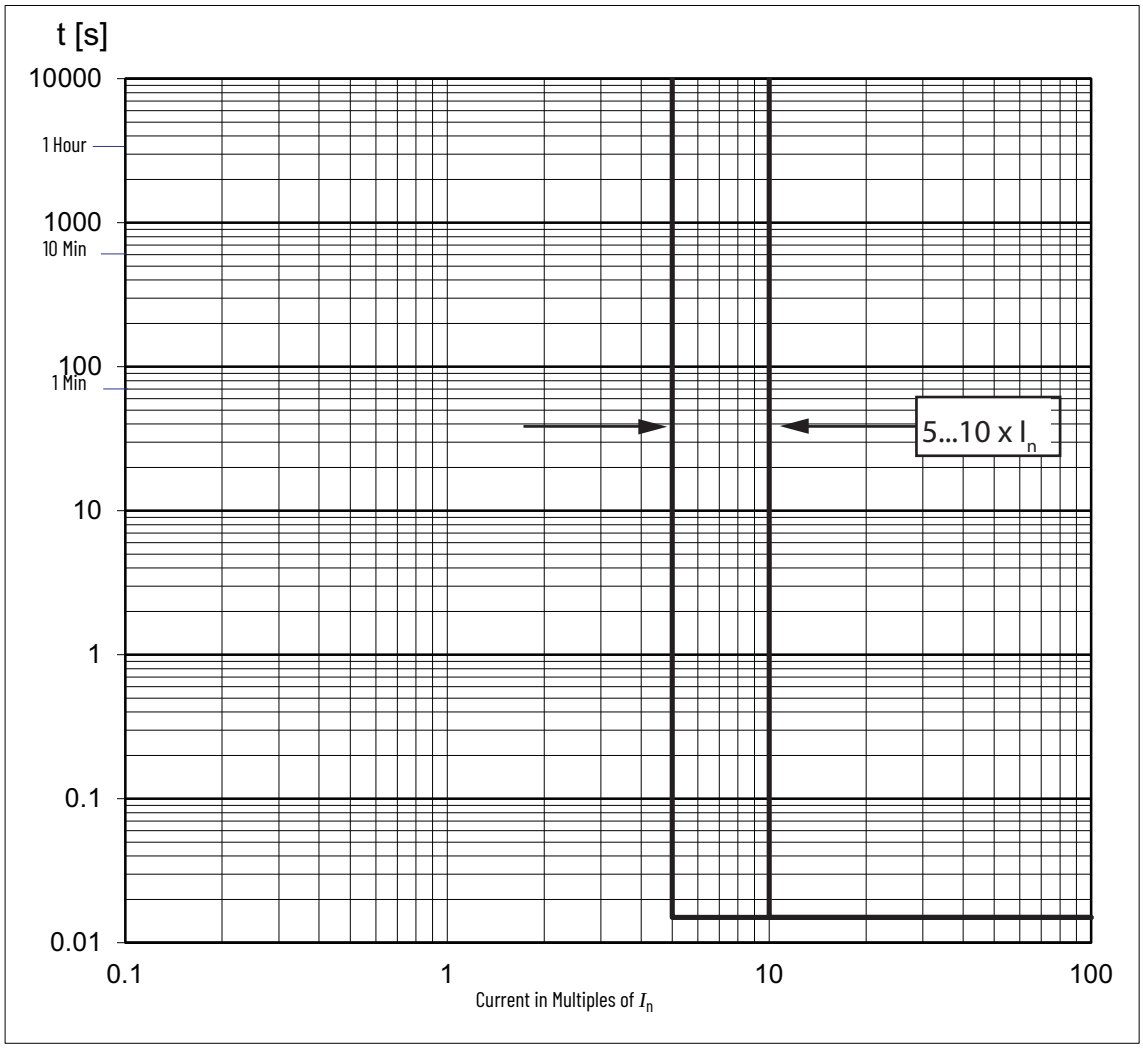

Table 285 - Instantaneous Pick-up Setting (Amperes)

Catalog Number	A	B	C	D	E	F	G	H	I
140MG-J8P-D15	750	844	938	1031	1125	1219	1313	1406	1500
140MG-J8P-D17	875	984	1094	1203	1313	1422	1531	1641	1750
140MG-J8P-D20	1000	1125	1250	1375	1500	1625	1750	1875	2000
140MG-J8P-D22	1125	1266	1406	1547	1688	1828	1969	2109	2250
140MG-J8P-D25	1250	1406	1563	1719	1875	2031	2188	2344	2500

Table 286 - Typical Trip Unit Nameplate(1)

I_3 [A]								
A	B	C	D	E	F	G	H	I
750	844	938	1031	1125	1219	1313	1406	1500

(1) See Table 285 for trip setting values.

Figure 118 - 140MG-K Time-current Curve

- Maximum voltage: 600V AC, (50/60 Hz)
- Maximum current: 300, 400 A

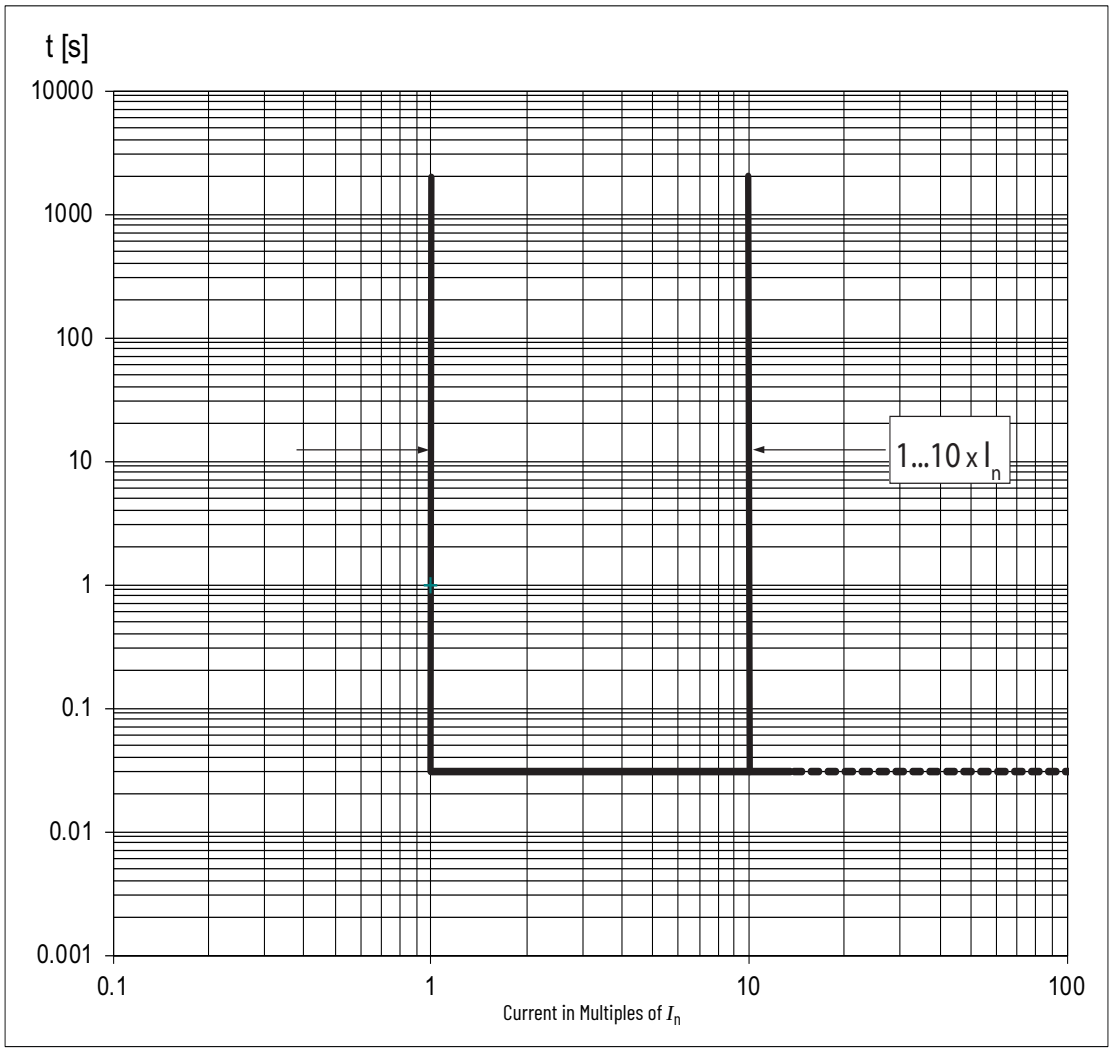

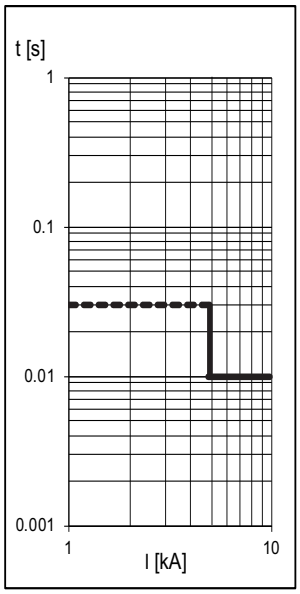

Figure 119 - 140MG-M Time-current Curve

- Maximum voltage: 600V AC, (50/60 Hz)
- Maximum current: 600, 800 A

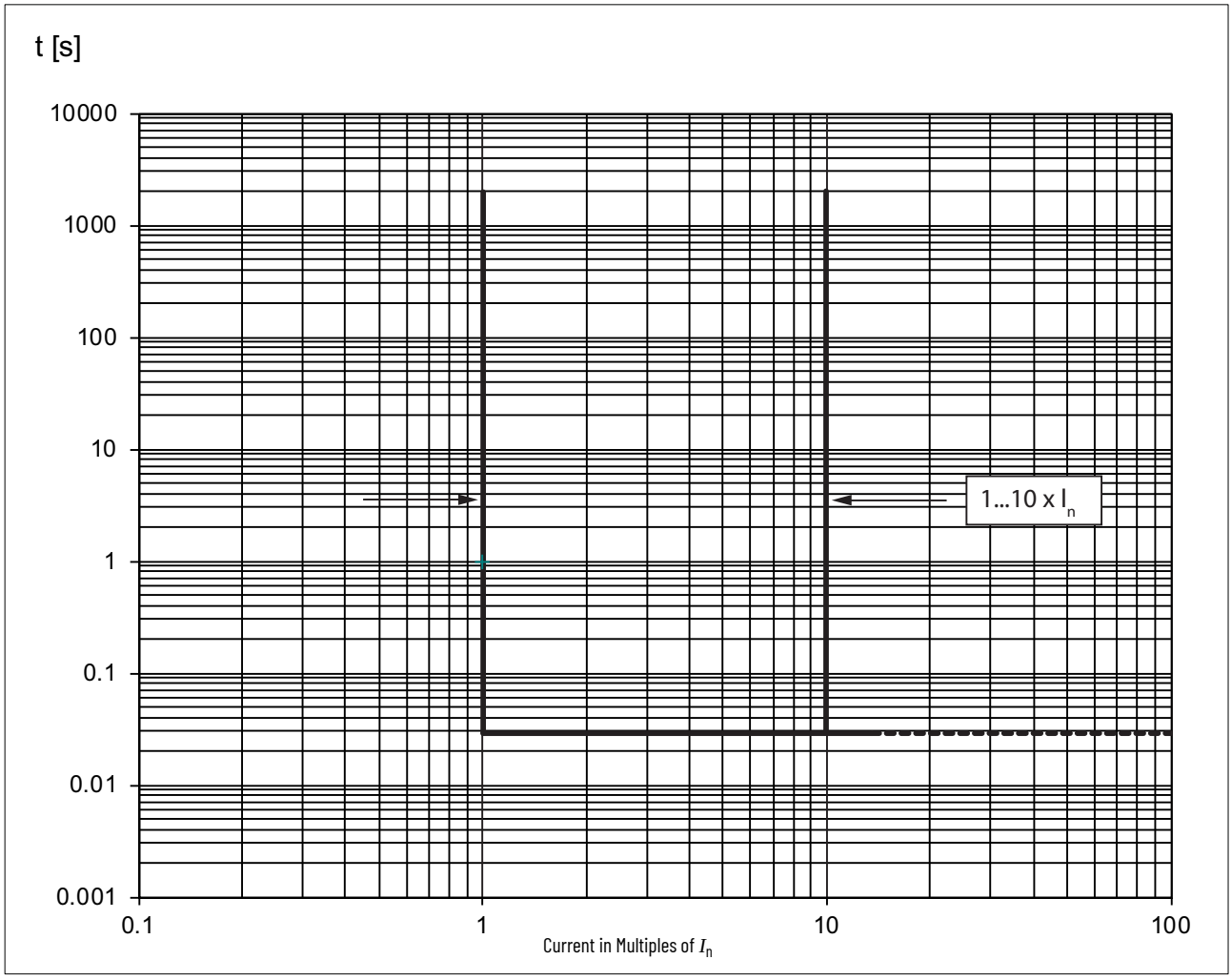

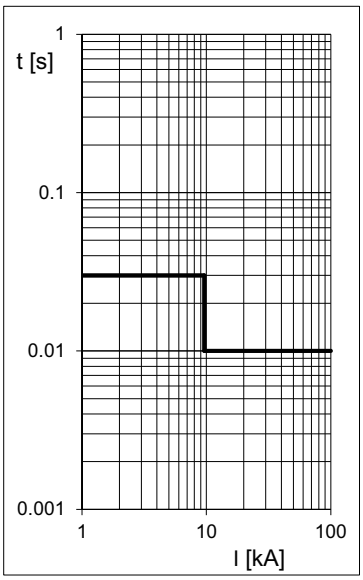

Figure 120 - 140MG-N Time-current Curve

- Maximum voltage: 600V AC, (50/60 Hz)
- Maximum current: 1200 A

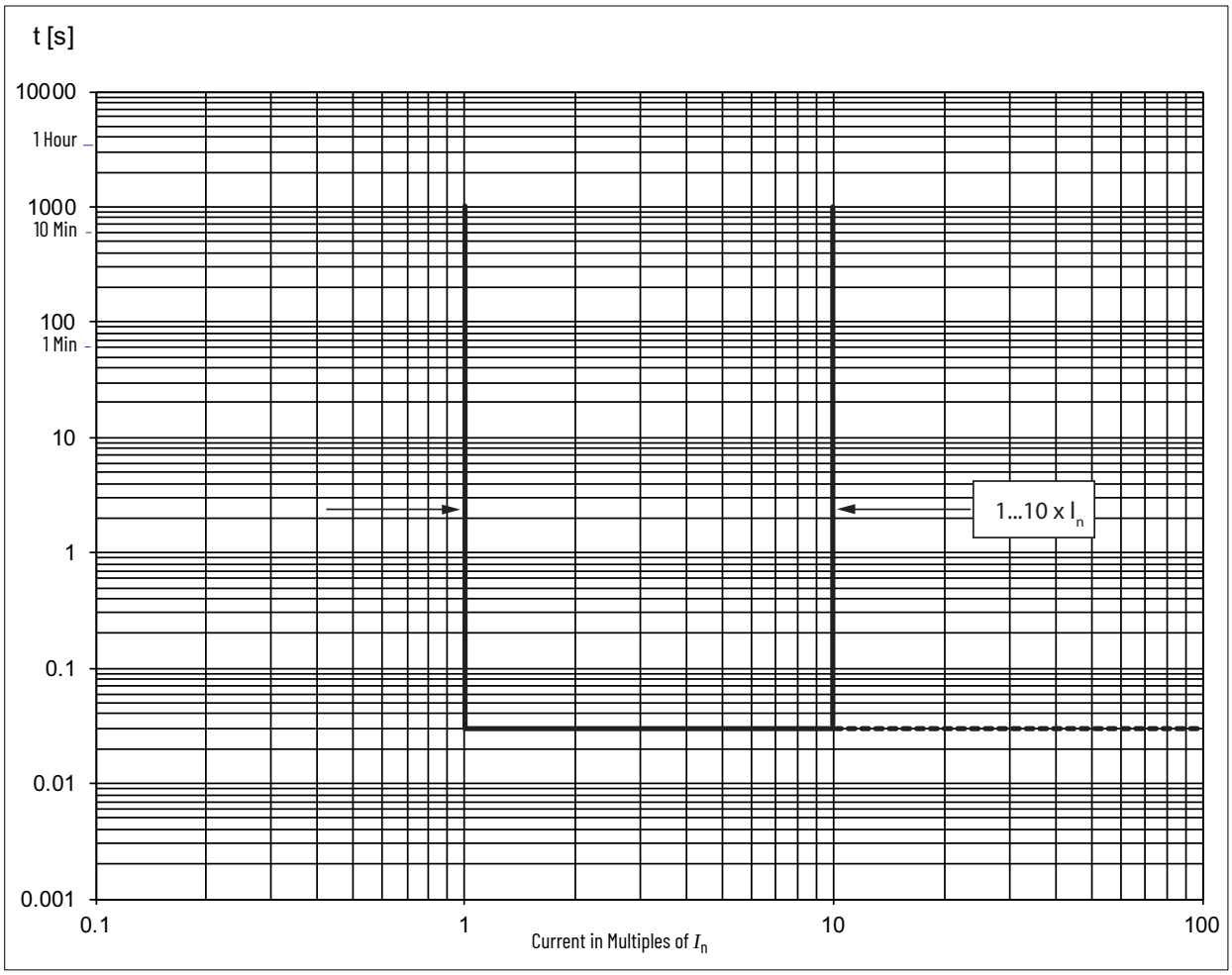

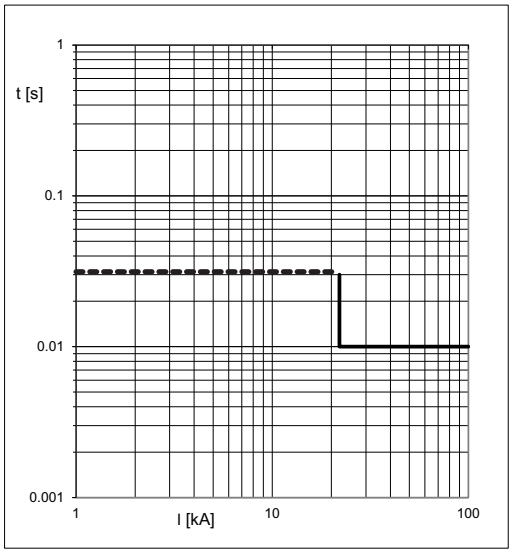

Bulletin 140MG Motor Protection Circuit Breakers Trip Curves

Figure 121 - 140MG-H Time-current Curve

- Maximum voltage: 600V AC, 50/60 Hz
- Available Current Sensors: 25 A, 60 A, 100 A

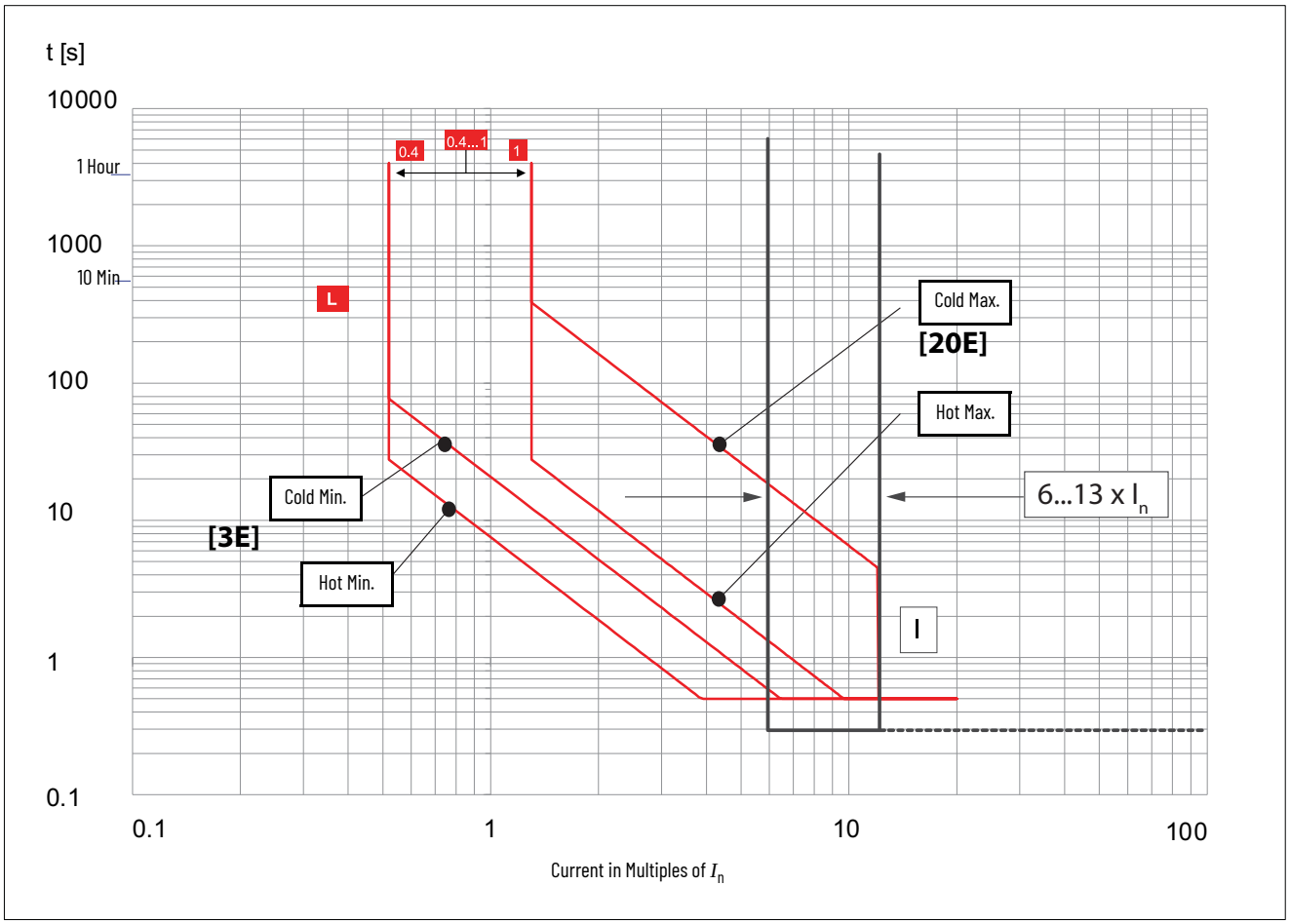

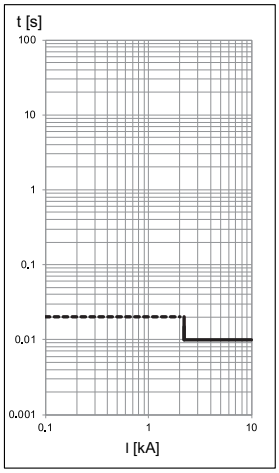

Notes:

1. Curve accuracy applies from -20...+55 °C (-4...+131 °F) ambient temperature. For possible continuous ampere derating for ambient temperature above 40 °C (104 °F), consult your local Rockwell Automation sales office or Allen-Bradley distributor.
2. Set L function value equal to the motor FLA.
3. Total clearing times shown include the response times of the trip unit, the breaker opening, and the interruption of the current.
4. For high fault current levels, an additional fixed instantaneous hardware override is provided at 2.2 kA.

Table 287 - Motor Class

Motor Class	T_1 [s]	Motor Class	T_1 [s]
5E		20E	
10E		30E	

Figure 122 - 140MG-J Time-current Curve

- Maximum voltage: 600V AC, 50/60 Hz
- Available Current Sensors: 40 A, 60 A, 100 A, 150 A

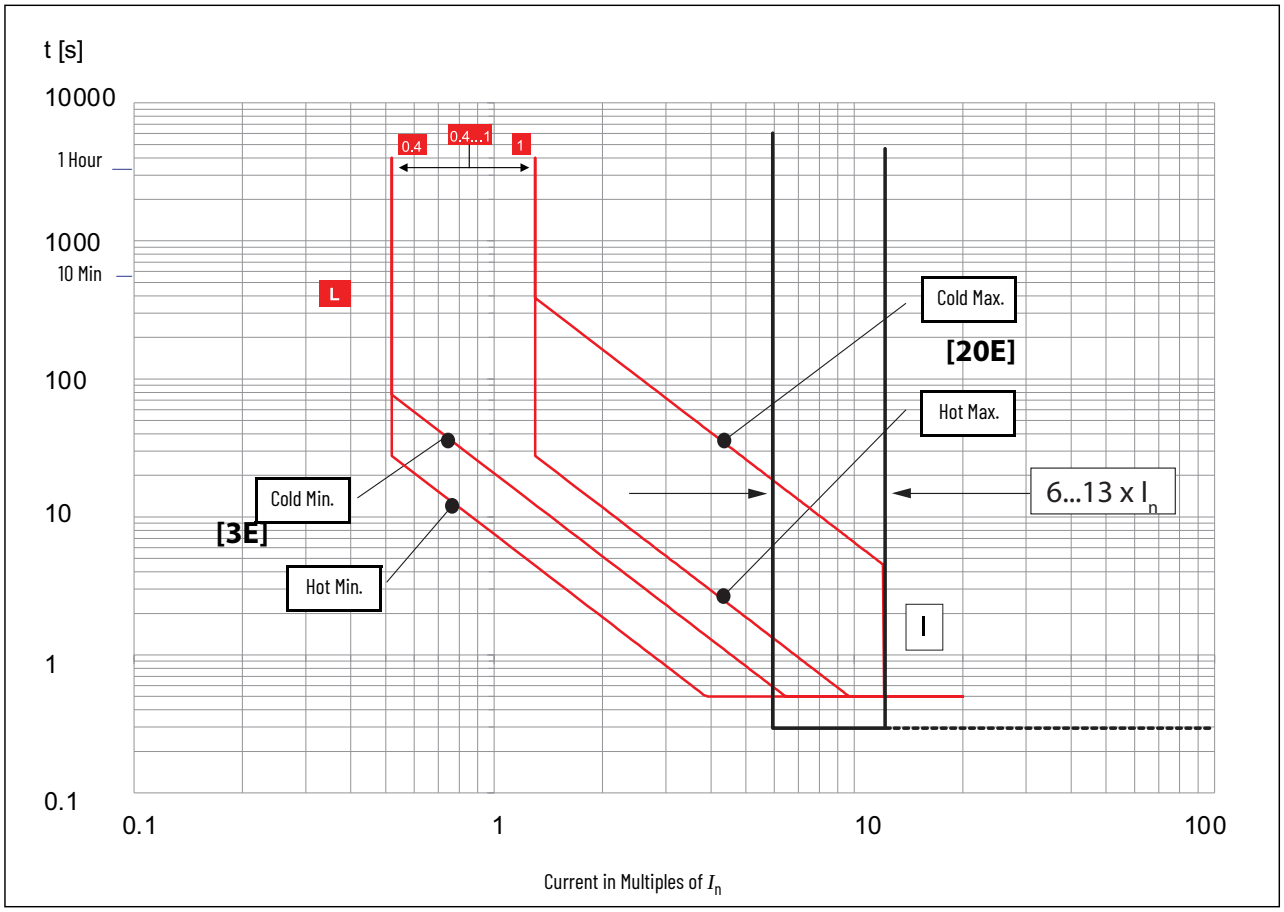

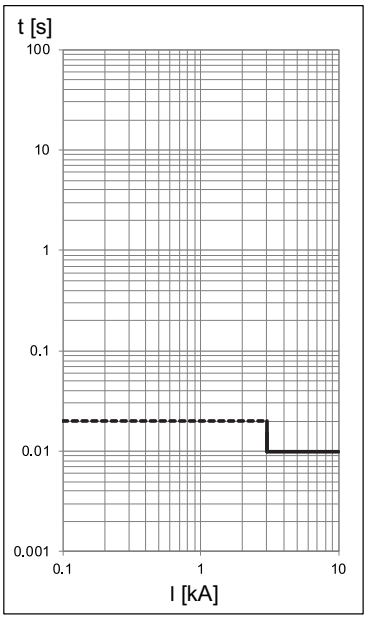

Notes:

1. Curve accuracy applies from -20...+55 °C (-4...+131 °F) ambient temperature. For possible continuous ampere derating for ambient temperature above 40 °C (104 °F), consult your local Rockwell Automation sales office or Allen-Bradley distributor.
2. Set L function value equal to the motor FLA.
3. Total clearing times shown include the response times of the trip unit, the breaker opening, and the interruption of the current.
4. For high fault current levels, an additional fixed instantaneous hardware override is provided at 3 kA.

Table 288 - Motor Class

Motor Class	T_1 [s]	Motor Class	T_1 [s]
5E		20E	
10E		30E	

Bulletin 140G/MG G-Frame

Dimensions are in millimeters (inches). Dimensions are not intended to be used for manufacturing purposes.

Dimension tolerances ± 0.1 mm (0.004 in)

Figure 123 - Panel Mounted Molded Case Circuit Breaker

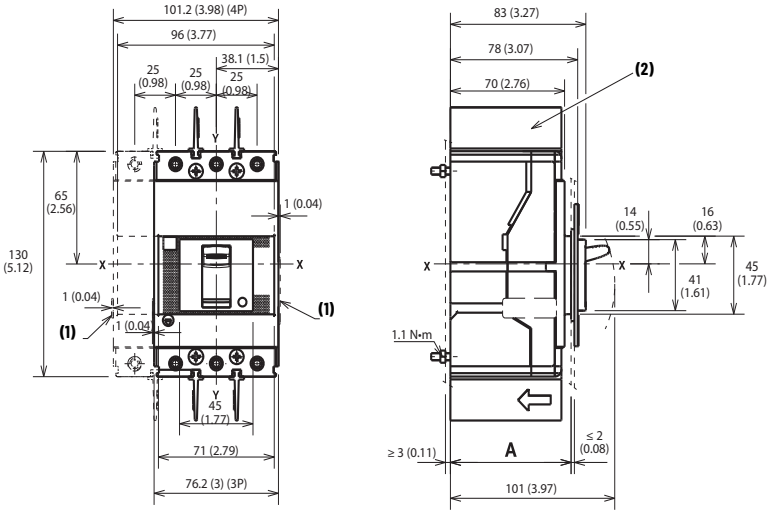

Description	No. of Poles	A
With escutcheon	3...4	74 (2.91)
Without escutcheon	3...4	71 (2.80)
	3...4	79 (3.11)

Note	Information
1	Overall dimensions of optional side covers
2	Required 25 mm (0.98 in.) insulating phase barriers are provided

Figure 124 - DIN Rail Mounted Molded Case Circuit Breaker (Series A)

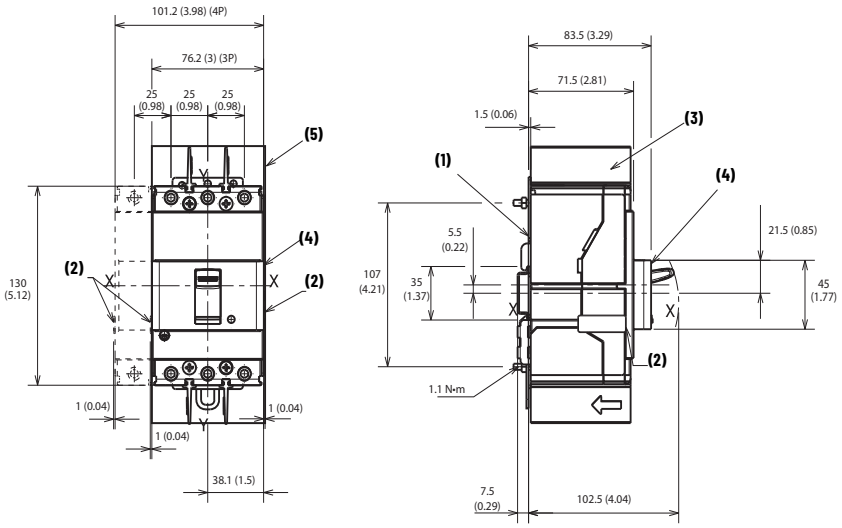

Note	Information
1	Mounting bracket
2	Overall dimensions of optional side covers
3	Required 25 mm (0.98 in.) insulating phase barriers are provided
4	Optional front cover for DIN Rail
5	Flexible insulator

Dimension tolerances ± 0.1 mm (0.004 in)

Figure 125 - Drilling Template for Molded Case Circuit Breaker Mounting

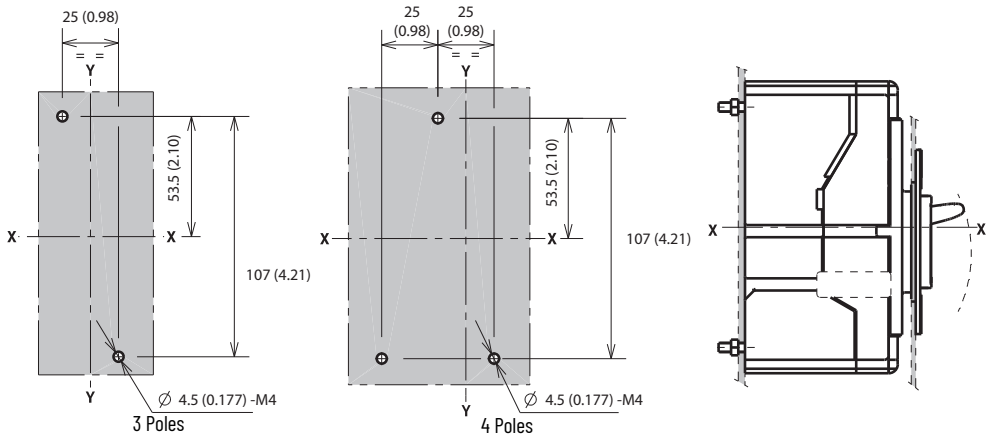

Figure 126 - Cat. Nos. 140G-G-ECM, -ECM4 Terminals

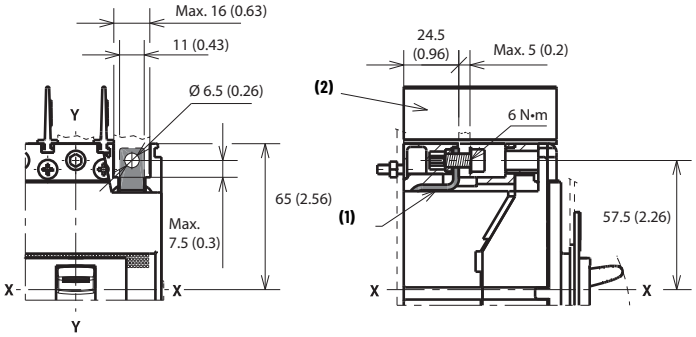

Note	Information
1	End cap terminals for ring or busbar connection
2	Required 25 mm (0.98 in.) insulating phase barriers are provided

Figure 127 - Cat. Nos. 140G-G-EXT3, -EXT4 Extended Terminals

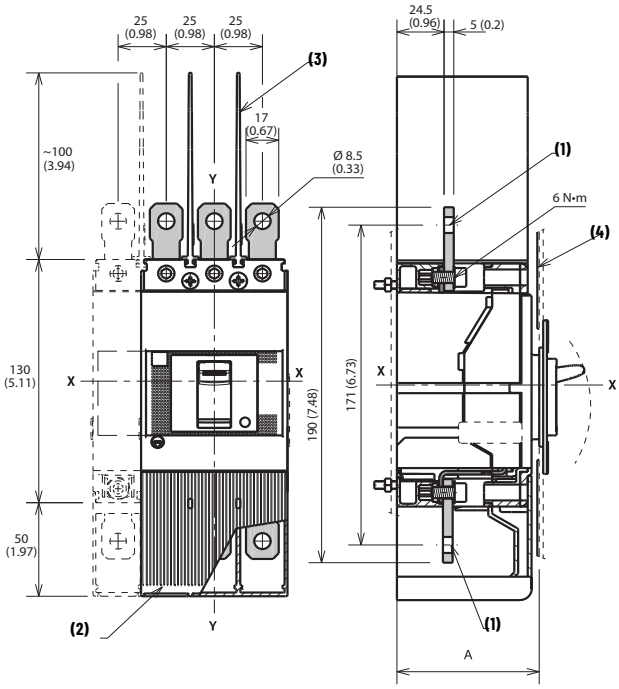

Note	Information
1	Extended terminals
2	Optional terminal covers with IP40 protection are available
3	Required 100 mm (3.94 in.) insulating phase barriers are provided
4	Internal insulating plate is required with phase barriers (customer provided) when mounted through the enclosure door

Dimension tolerances ± 0.1 mm (0.004 in)

Figure 128 - Cat. Nos. 140G-G-EXS3, -EXS4 Spreader Terminals

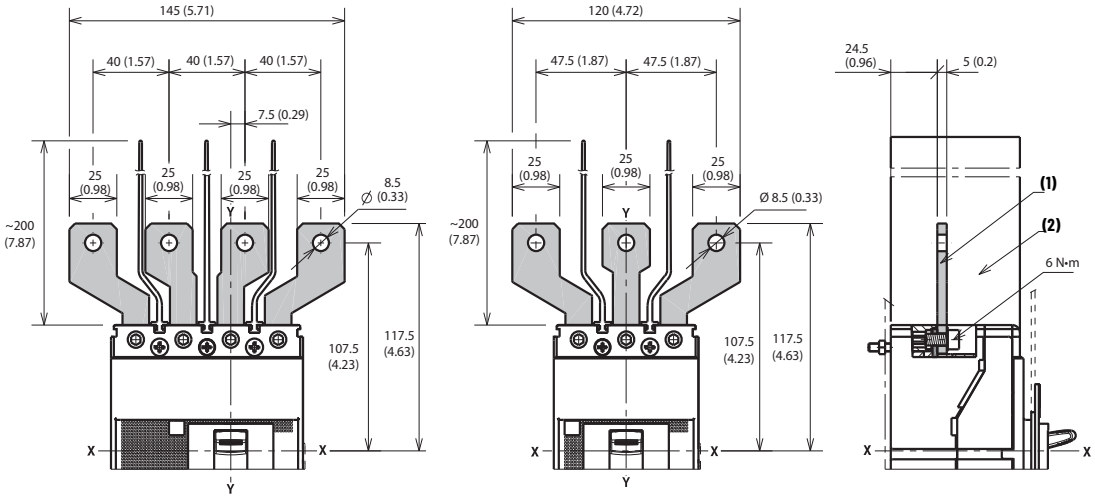

Note	Information
1	Extended spread terminals for busbar connection
2	Required 200 mm (7.87 in.) insulating phase barriers are provided

Figure 129 - Cat. Nos. 140G-G-TLC13, 140G-G-TLC14 Terminals (Copper Only Lug)

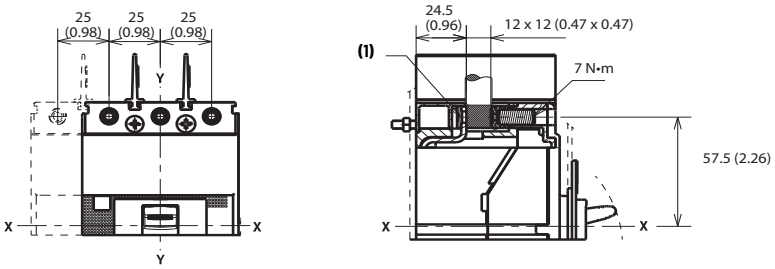

Note	Information
1	Terminals

Figure 130 - Cat. No. 140G-G-MTL63, -MTL64 Terminal (Multi-cable Terminal Lug)

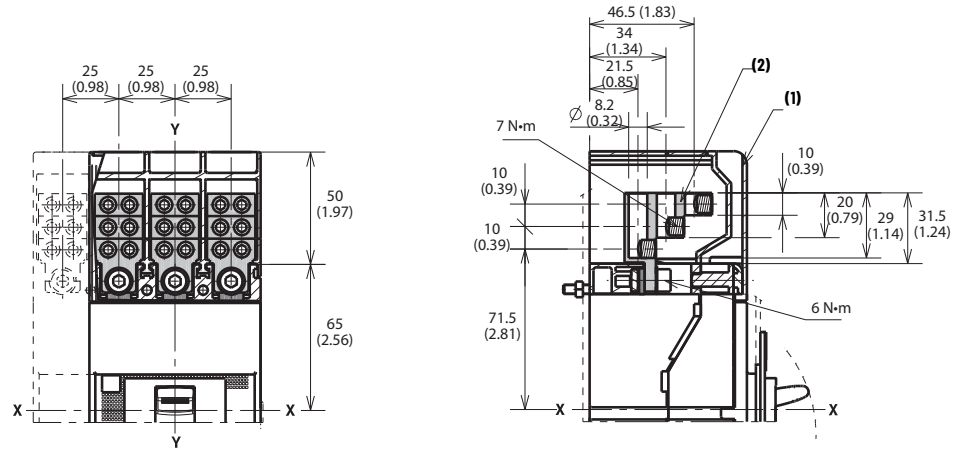

Note	Information
1	Required terminal covers with IP40 protection are provided
2	Terminal lugs for multi-cable connection

Dimension tolerances ± 0.1 mm (0.004 in)

Figure 131 - Cat. No. 140G-G-RMB or 140G-G-RMY Direct Rotary Operating Handle

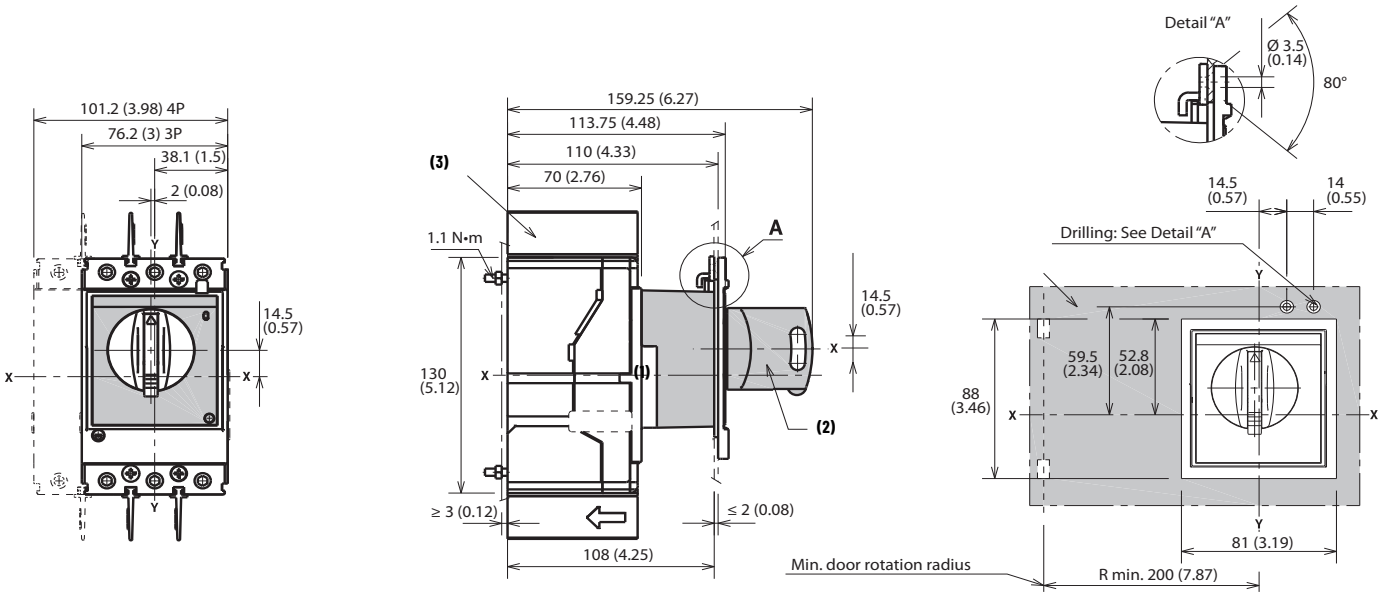

Note	Information
1	Rotary handle operating mechanism on MCCB
2	Door drilling template with direct rotary handle
3	Required 25 mm (0.98 in.) insulating phase barriers are provided

Figure 132 - 140G-H-RVM... Minimum/Maximum Enclosure Depth

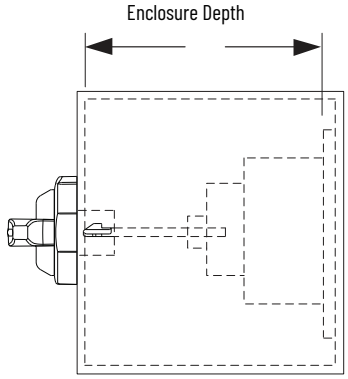

This figure depicts the minimum and maximum enclosure sizes that accommodate the MCCB, operator, and handle. See Figure 133 for overall assembly dimension and handle cutout.

Description	Minimum	Maximum
12 in. Shaft	7.25 in. (191 mm)	17.75 in. (451 mm)
21 in. Shaft		26.75 in. (679 mm)
12 in. Shaft w/NFPA	9 in. (229 mm)	17.75 in. (451 mm)
21 in. Shaft w/NFPA		26.75 in. (679 mm)

Dimension tolerances ± 0.1 mm (0.004 in)

Figure 133 - Cat. No. 140G-G-RVM... Variable Depth Rotary Mechanism

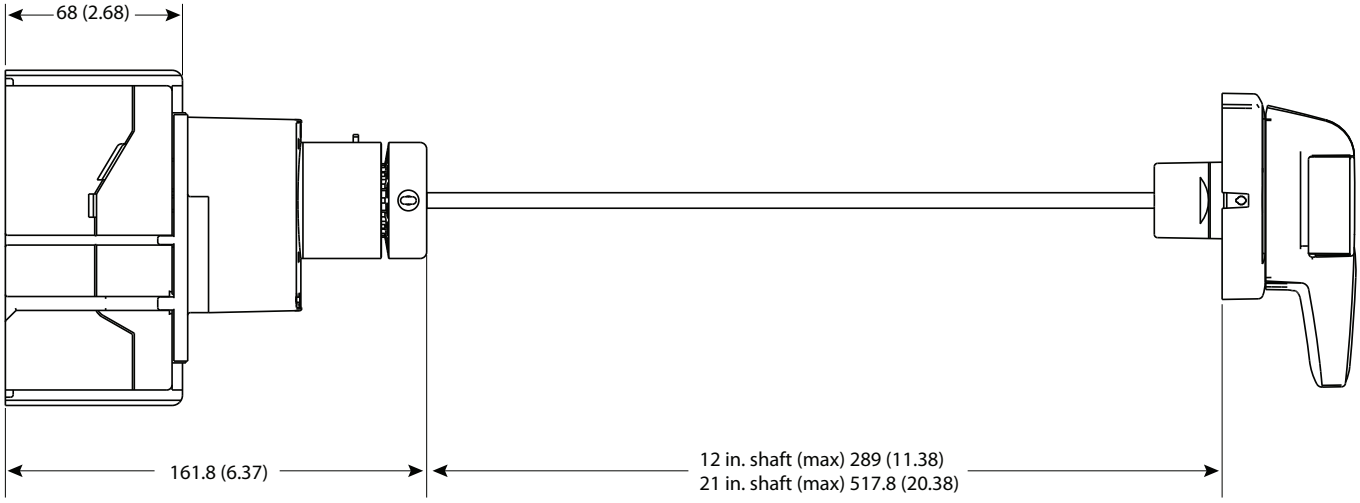

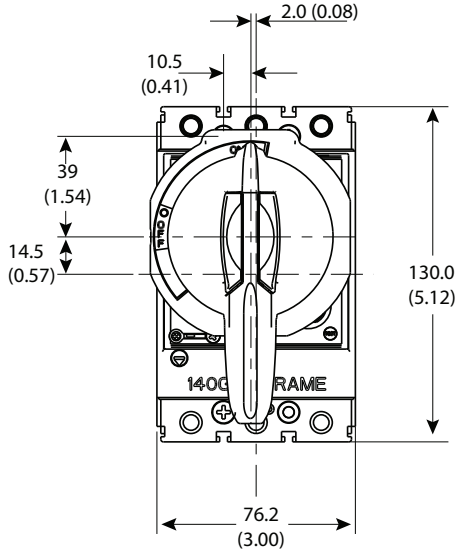

3-Pole

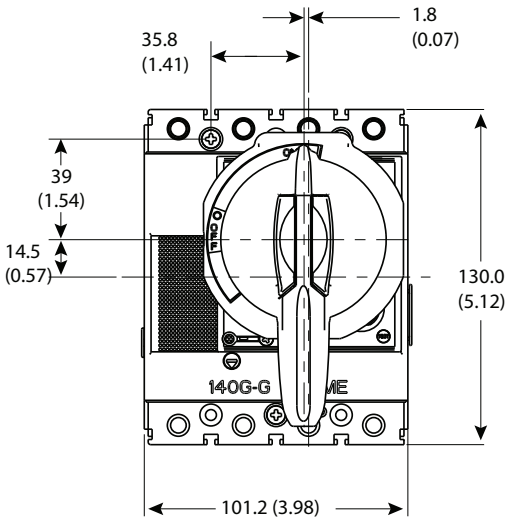

4-Pole

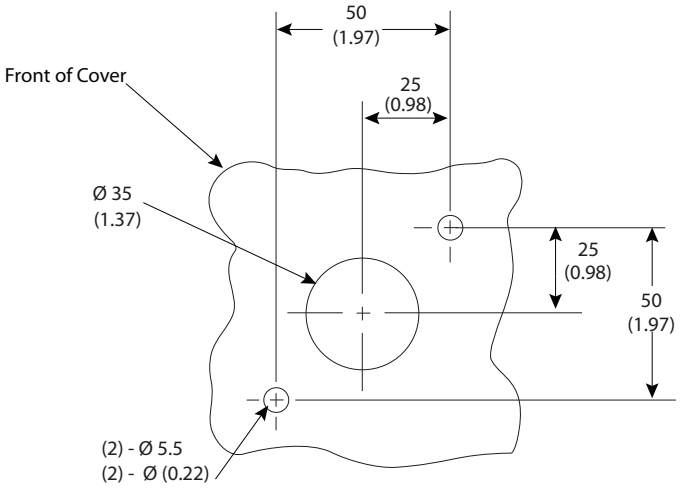

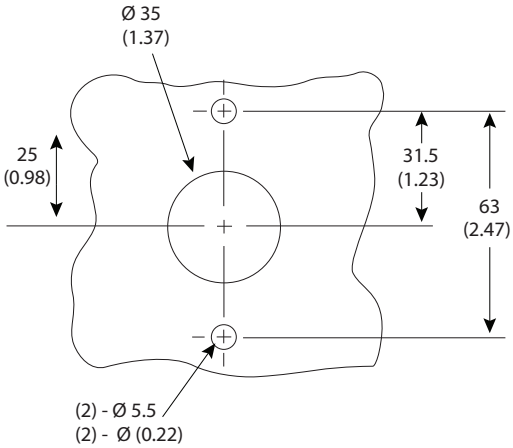

Dimension tolerances ± 0.1 mm (0.004 in)

Figure 134 - Cat. No. 140G-G-EOP... Motor Operator

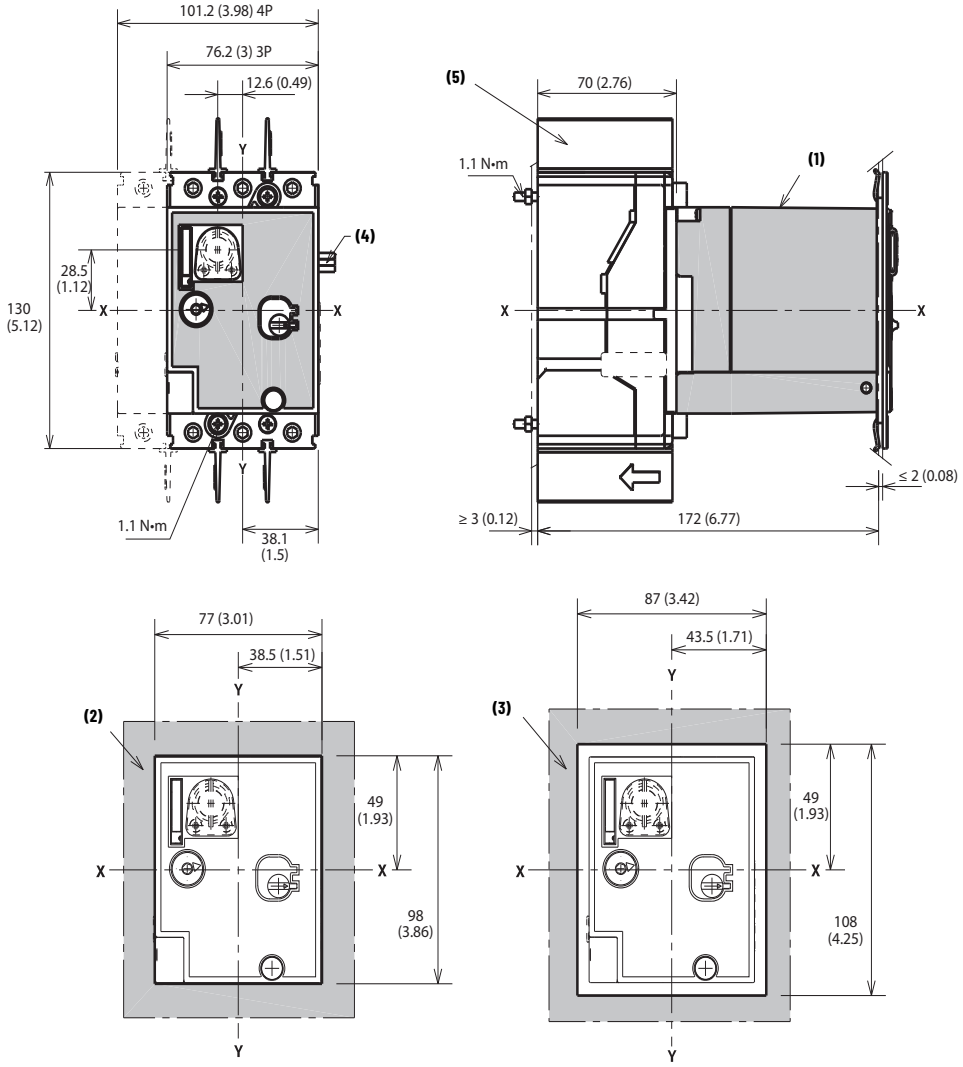

Note	Information
1	Motor operator
2	Door drilling template (without escutcheon)
3	Door drilling template (with escutcheon)
4	Cable connection
5	Required 25 mm (0.98 in.) insulating phase barriers are provided

Dimension tolerances ± 0.1 mm (0.004 in)

Figure 135 - Cat. No. 140G-G-ELP1603 Residual Current Release Module for 3-Pole Molded Case Circuit Breakers

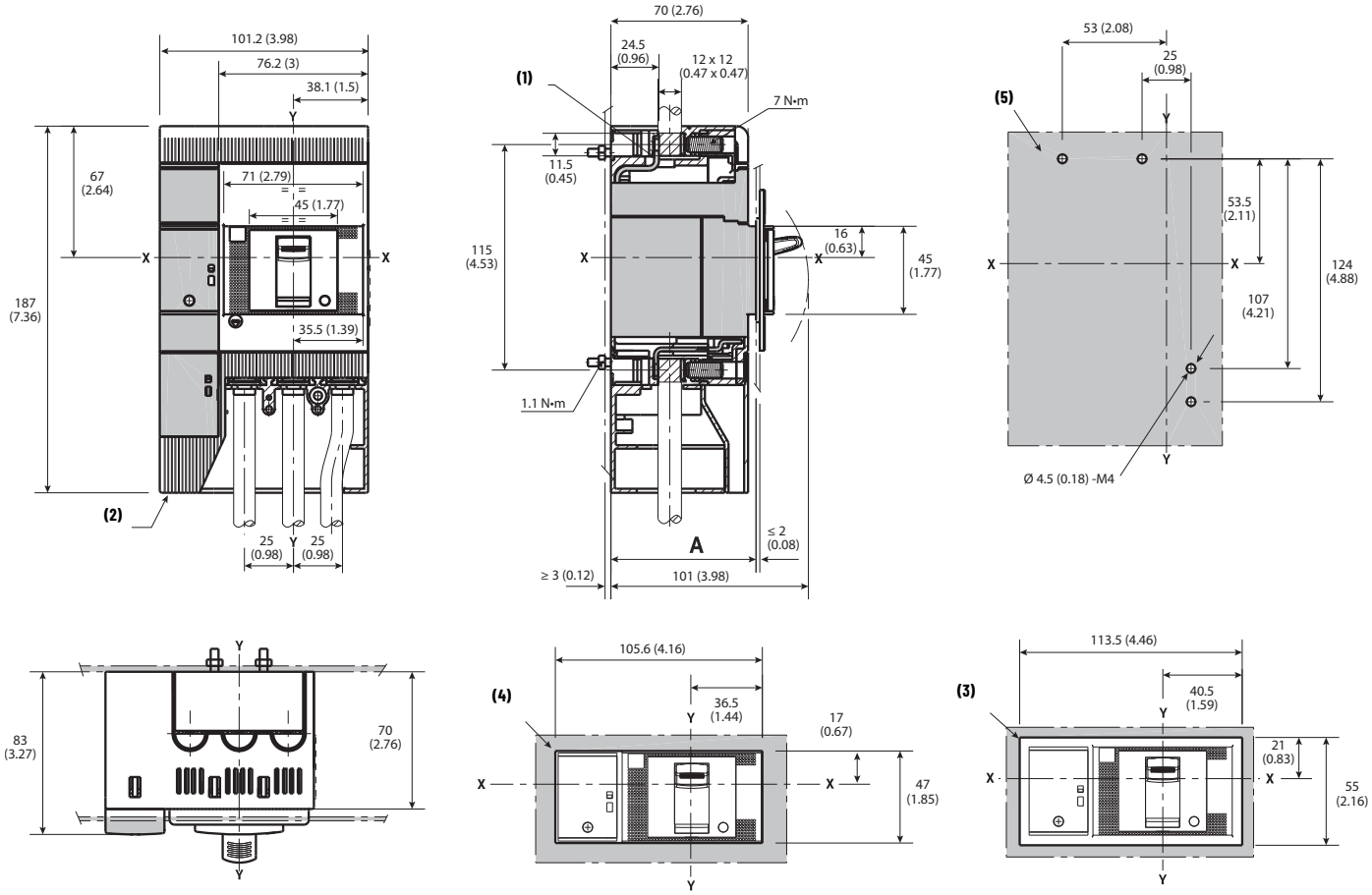

Description	No. of Poles	A
With escutcheon	3	74 (2.91)
Without escutcheon	3	71 (2.80)

Note	Information
1	Terminals for ring or busbar connection
2	IP40 terminal covers
3	Drilling template — door with direct rotary mechanism and escutcheon
4	Drilling template — door with direct rotary mechanism, without escutcheon
5	Drilling template — molded case circuit breaker on mounting plate

Dimension tolerances ± 0.1 mm (0.004 in)

Figure 136 - Cat. No. 140G-G-ELP1604 Residual Current Release Module for 4-Pole Molded Case Circuit Breakers

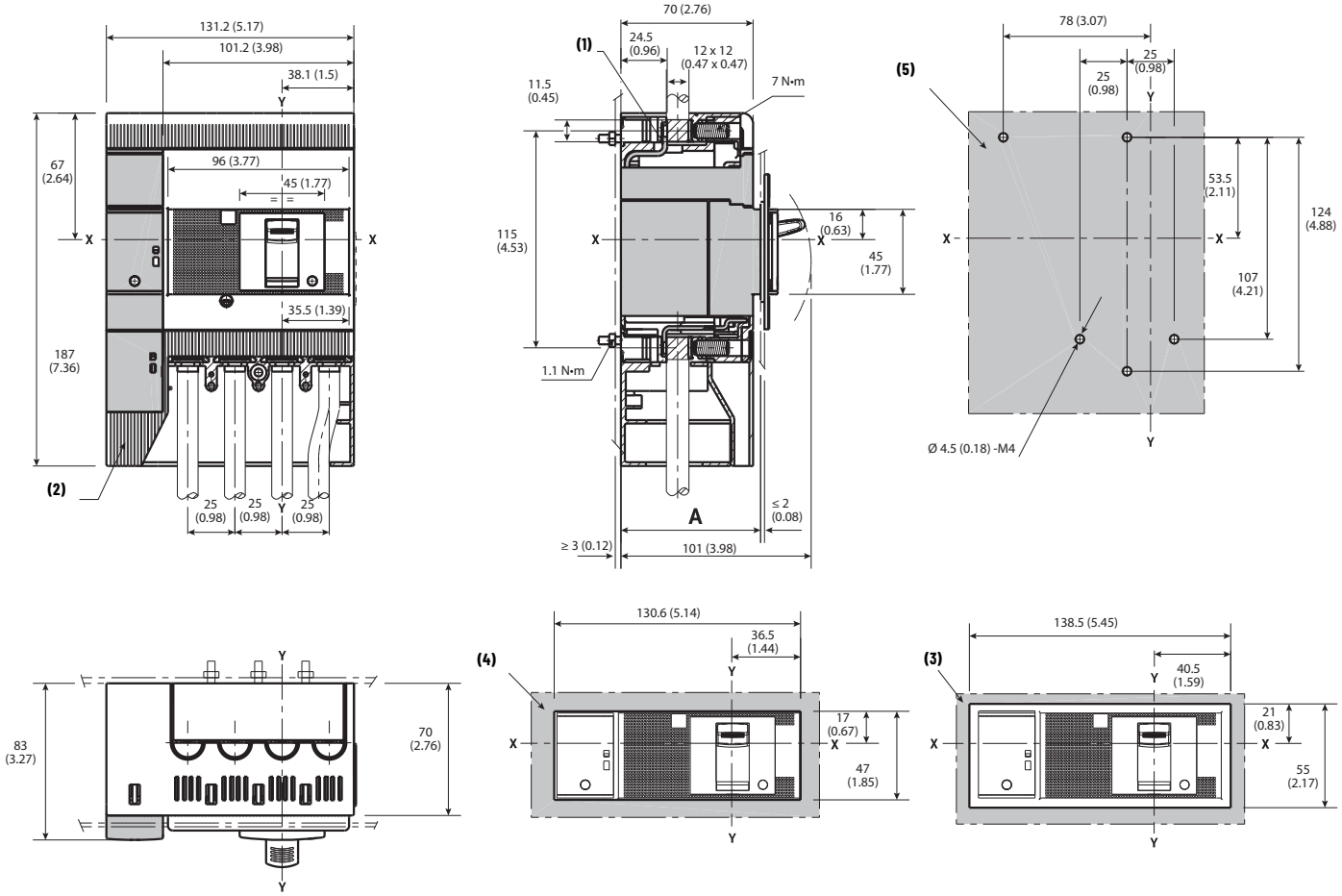

Description	No. of Poles	A
With escutcheon	4	74 (2.91)
Without escutcheon	4	71 (2.80)

Note	Information
1	End cap terminals for ring or busbar connection
2	IP40 terminal covers
3	Drilling template — door with direct rotary mechanism and escutcheon
4	Drilling template — door with direct rotary mechanism, without escutcheon
5	Drilling template — molded case circuit breaker on mounting plate

Dimension tolerances ± 0.1 mm (0.004 in)

Figure 137 - Metal Bail Flex Cable Operator and Actuator, Cat. No. 140G-G-FCXB...

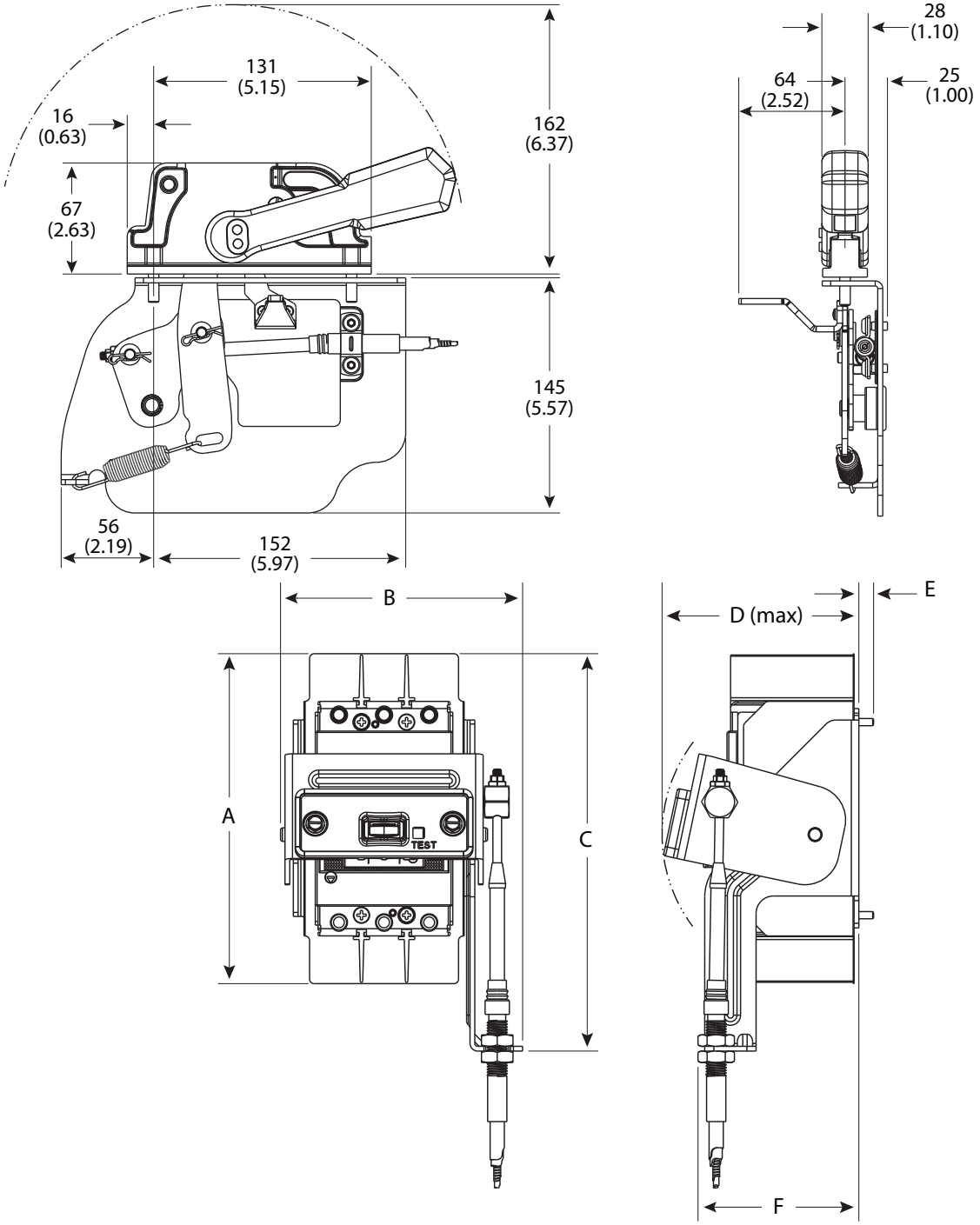

Frame Size	Units	Dimension Designation					
		A	B	C	D	E	F
G	[mm]	183 (7.20)	134 (5.28)	220 (8.67)	109 (4.29)	8 (0.32)	89 (3.51)
H	[mm]	183 (7.20)	145 (5.70)	224 (8.81)	125 (4.90)	8 (0.32)	104 (4.10)
I	[mm]	203 (8.00)	164 (6.44)	235 (9.25)	109 (4.29)	8 (0.32)	88 (3.45)
J	[mm]	212 (8.35)	164 (6.44)	235 (9.25)	125 (4.90)	8 (0.32)	100 (3.95)
K	[mm]	266 (10.50)	197 (7.75)	256 (10.02)	146 (5.75)	11 (0.45)	116 (4.55)

Dimension tolerances ± 0.1 mm (0.004 in)

Figure 138 - Replacement G-Frame Flex Cable Operator and Actuator, Cat. No. 140G-G-FCX...

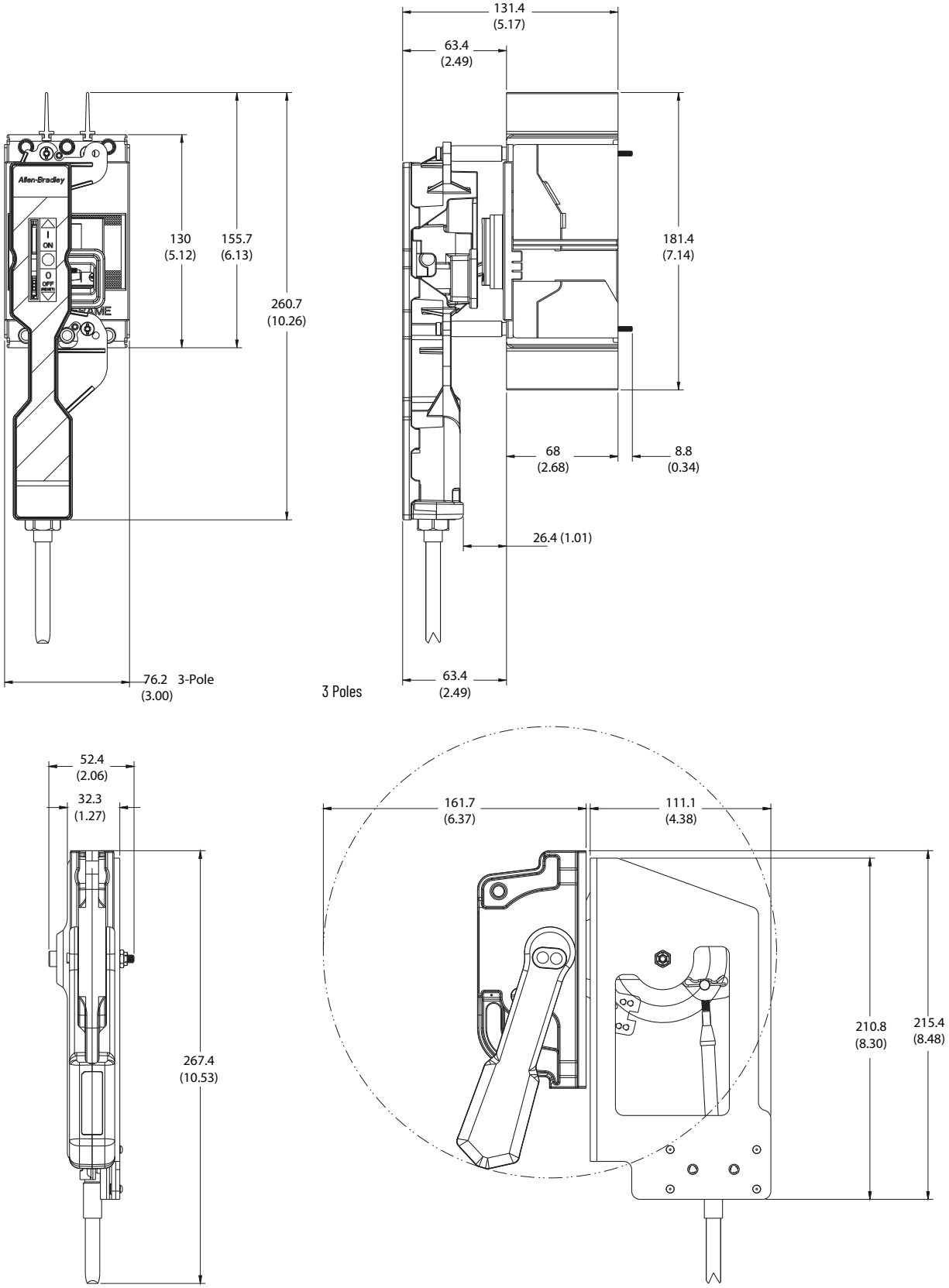

Dimension tolerances ± 0.1 mm (0.004 in)

Figure 139 - G-Frame Through-the-door Rotary Operator

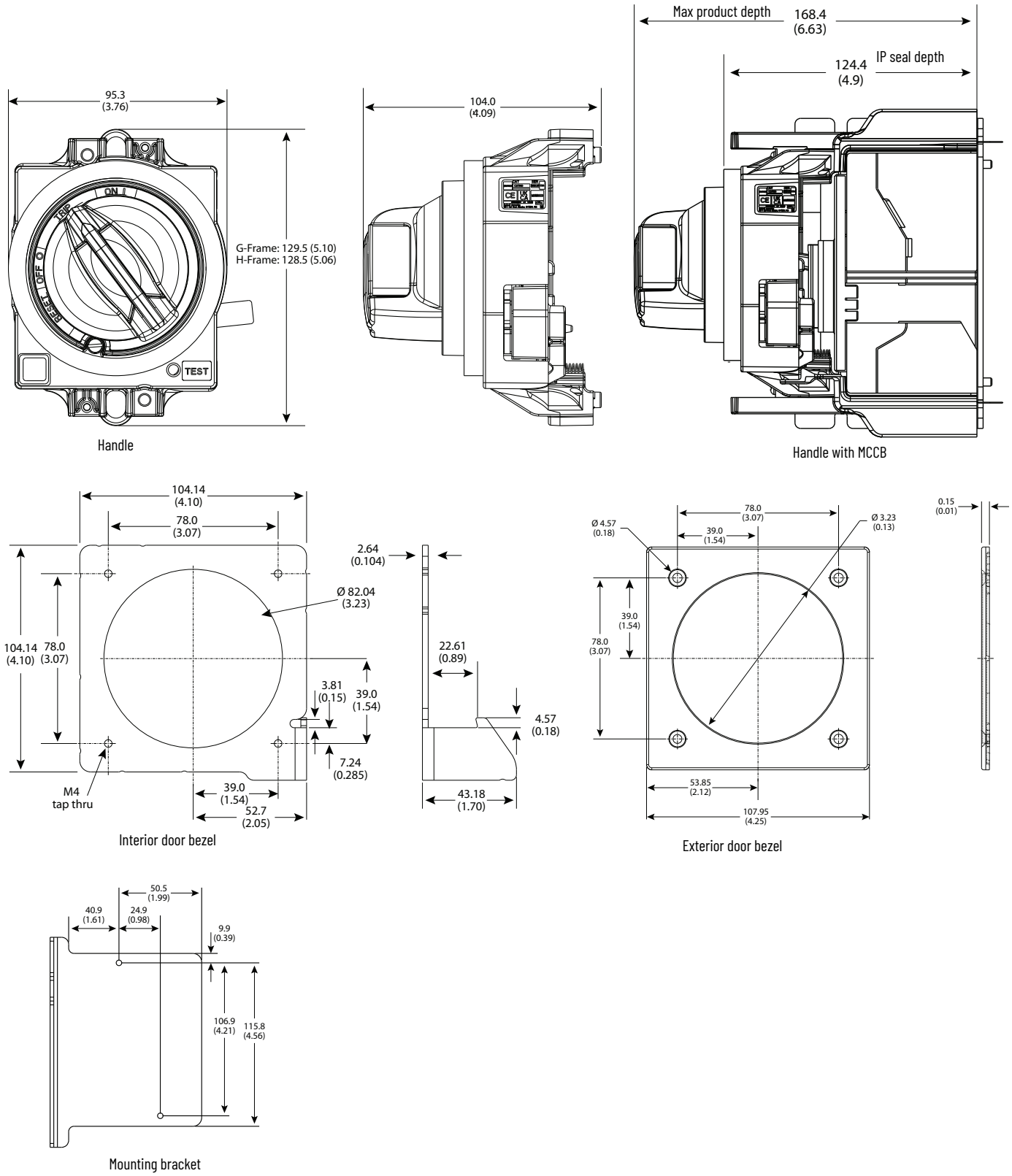

Bulletin 140G/MG H-Frame

Dimensions are in millimeters (inches). Dimensions are not intended to be used for manufacturing purposes.

Dimension tolerances ± 0.1 mm (0.004 in)

Figure 140 - Panel Mounted Molded Case Circuit Breaker

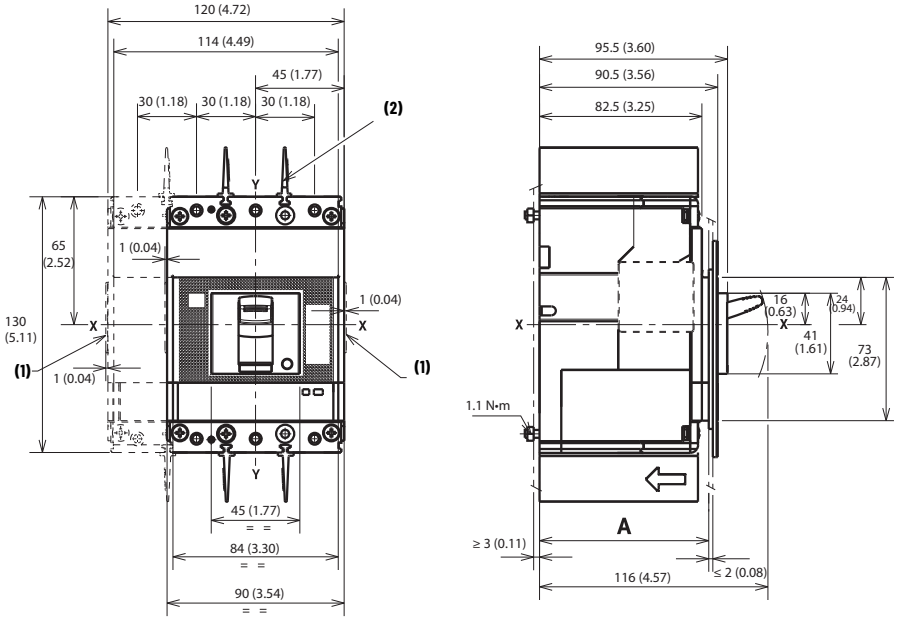

Description	No. of Poles	A
With escutcheon	3...4	86 (3.39)
Without escutcheon	3...4	83.5 (3.29)
	3...4	91.5 (3.60)

Note	Information
1	Overall dimensions of optional side covers
2	Required 25 mm (0.98 in.) insulating phase barriers are provided.

Figure 141 - DIN Rail Mounted Molded Case Circuit Breaker (Series A)

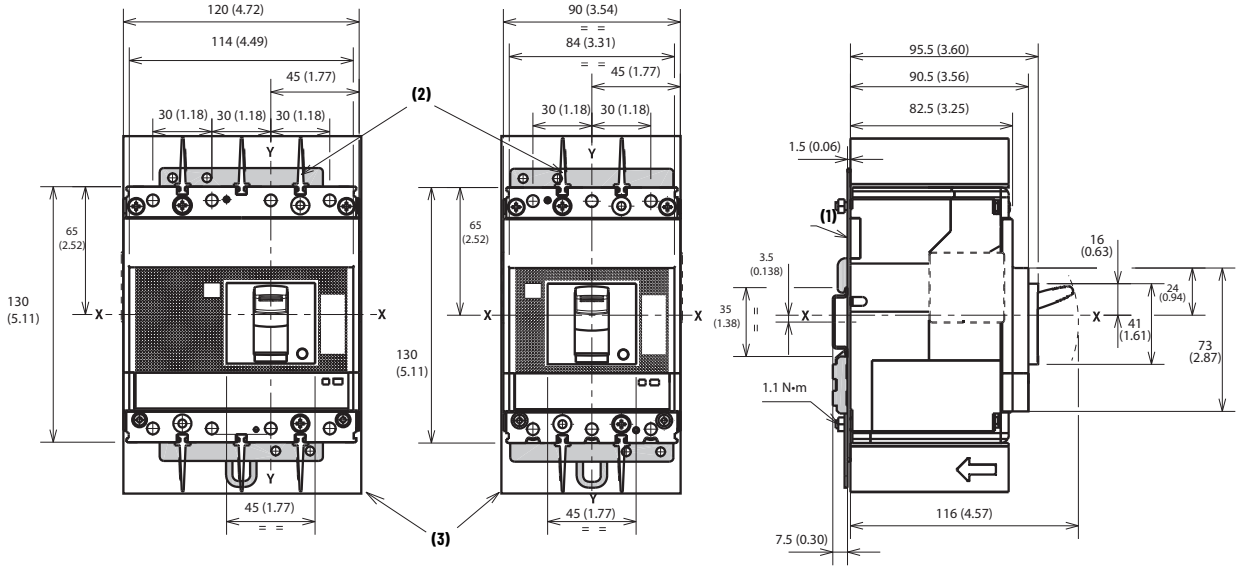

Note	Information
1	Mounting bracket
2	Required 25 mm (0.98 in.) insulating phase barriers are provided
3	Flexible insulator

Dimension tolerances ± 0.1 mm (0.004 in)

Figure 142 - Drilling Template for Molded Case Circuit Breaker Mounting

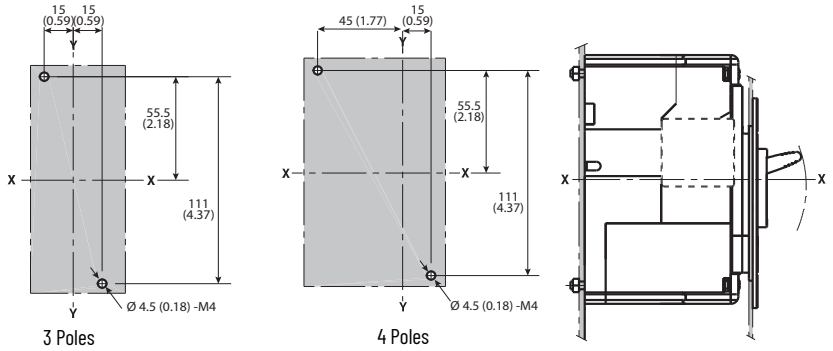

Figure 143 - Cat. Nos. 140G-H-ECM, -ECM4 Terminals

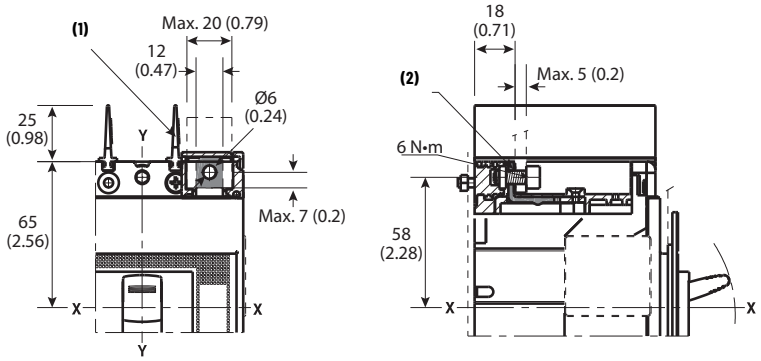

Note	Information
1	Required 25 mm (0.98 in.) insulating phase barriers are provided
2	End Cap terminals for ring or busbar connection

Dimension tolerances ± 0.1 mm (0.004 in)

Figure 144 - Cat. Nos. 140G-H-EXT3, -EXT4 Extended Terminals

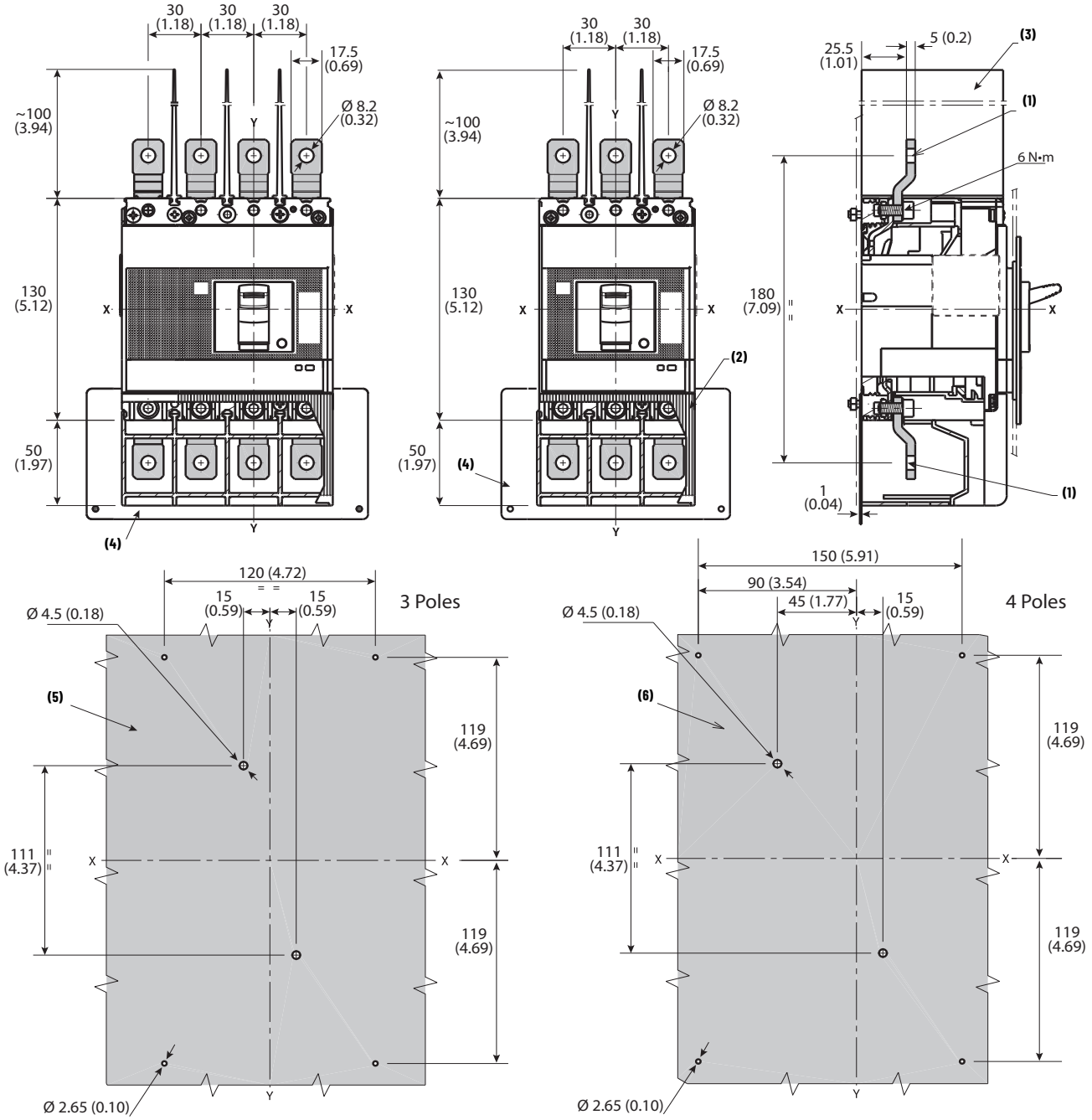

Note	Information
1	Extended terminals
2	Optional terminal covers with IP40 protection are available
3	Required 100 mm (3.94 in.) insulating phase barriers are provided
4	Supplied insulator panel; required for U_e >440V applications
5	Drilling template for 3-pole molded case circuit breaker, U_e> 440V (required)
6	Drilling template for 4-pole molded case circuit breaker, U_e> 440V (required)

Dimension tolerances ± 0.1 mm (0.004 in)

Figure 145 - Cat. Nos. 140G-H-EXS3, -EXS4 Spreader Terminals

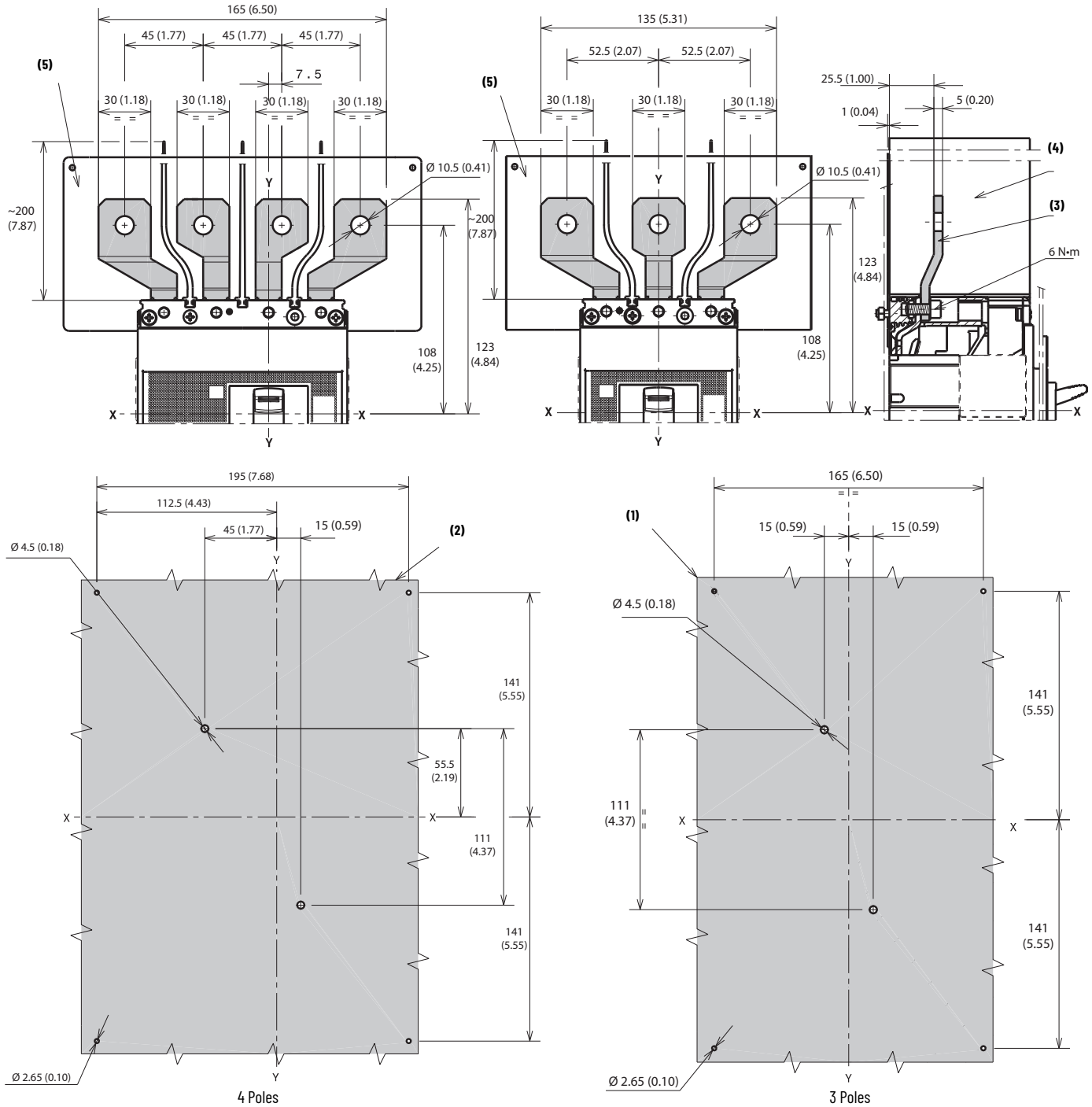

Note	Information
1	Drilling template for 3-pole molded case circuit breaker, U_e> 440V (required)
2	Drilling template for 4-pole molded case circuit breaker, U_e> 440V (required)
3	Extended spread terminals
4	Required 200 mm (7.87 in.) insulating phase barriers are provided
5	Supplied insulator panel; required for U_e> 440V applications

Dimension tolerances ± 0.1 mm (0.004 in)

Figure 146 - Cat. Nos. 140G-H-TLC13, -TLC14 Terminals

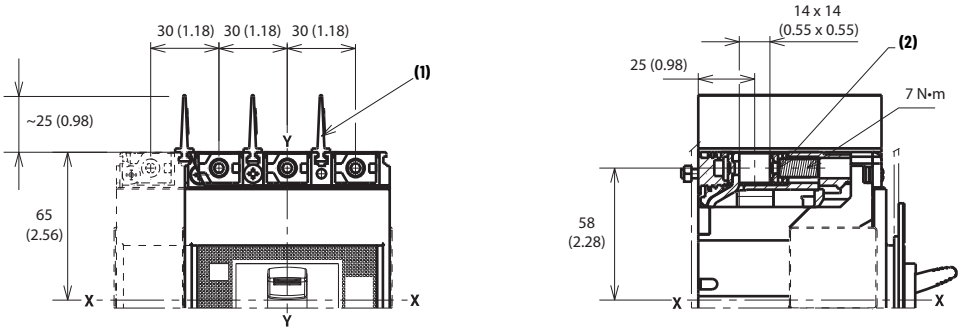

Note	Information
1	Required 25 mm (0.98 in.) insulating phase barriers are provided
2	Copper terminals

Figure 147 - Cat. Nos. 140G-H-MTL63, -MTL64 Terminals

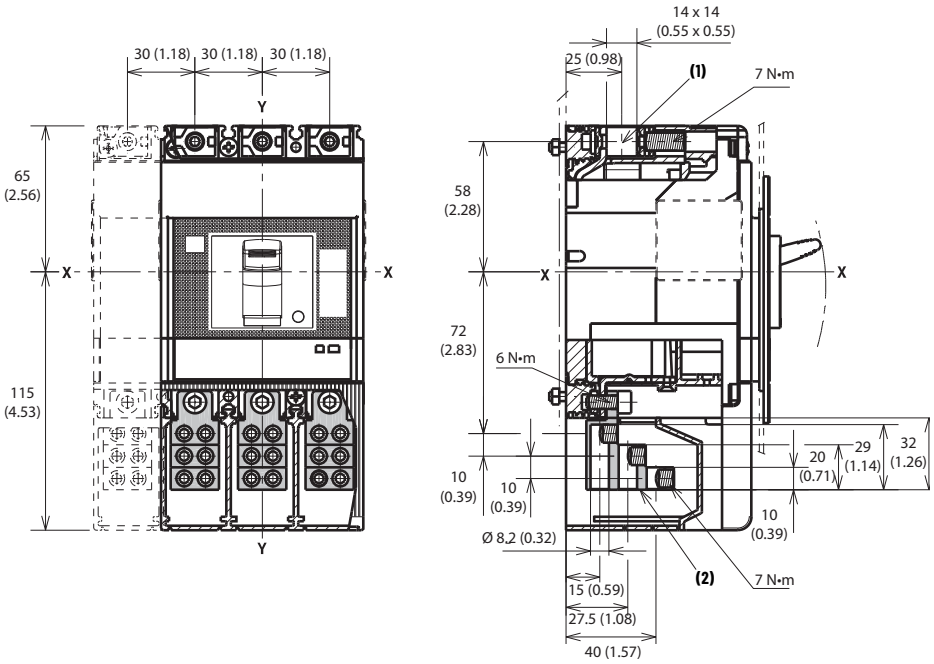

Note	Information
1	Copper terminals
2	Multi-cable terminals

Dimension tolerances ± 0.1 mm (0.004 in)

Figure 148 - Cat. No. 140G-H-RMB, -RMY Direct Rotary Operating Handle

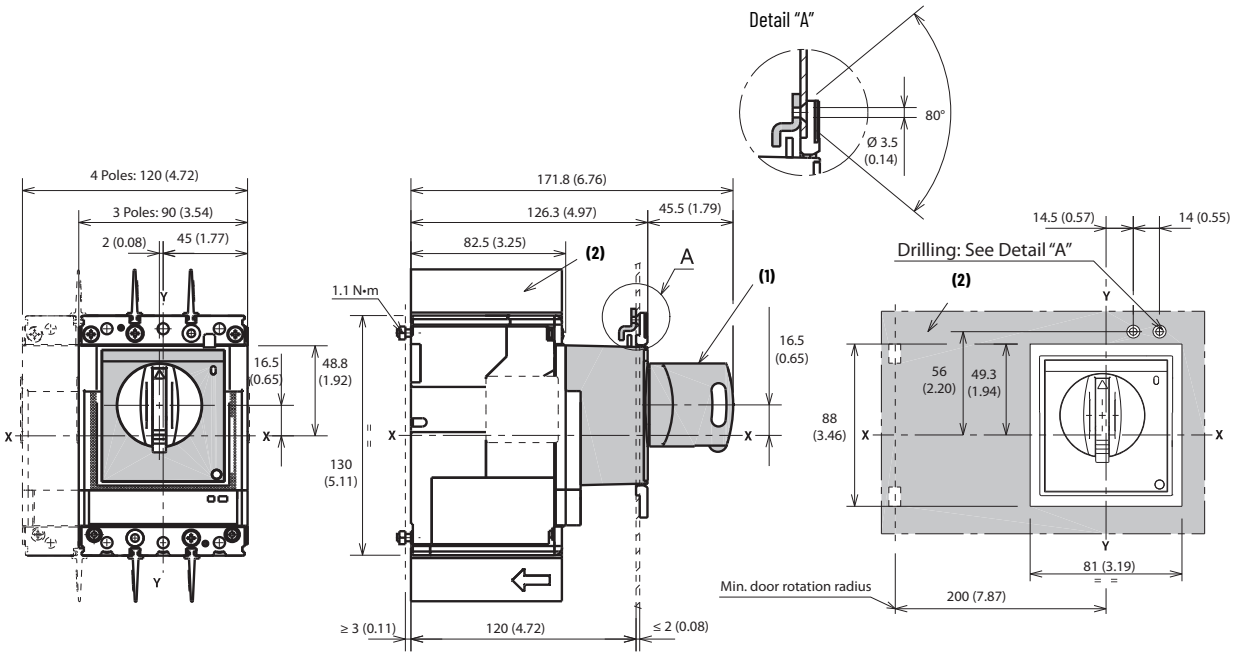

Note	Information
1	Rotary handle operating mechanism on molded case circuit breaker
2	Required 25 mm (0.98 in.) insulating phase barriers are provided

Figure 149 - 140G-H-RVM... Minimum/Maximum Enclosure Depth

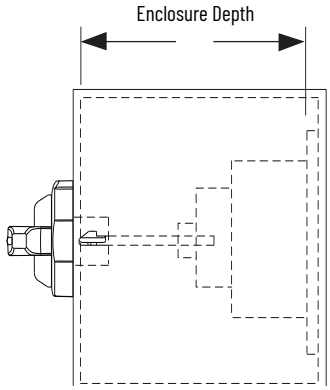

This figure depicts the minimum and maximum enclosure sizes that accommodate the MCCB, operator, and handle. See Figure 150 for overall assembly dimensions and cutout.

Description	Minimum	Maximum
12 in. Shaft	8 in. (205 mm)	18.25 in. (464 mm)
21 in. Shaft		27.25 in. (692 mm)
12 in. Shaft w/NFPA	9.25 in. (235 mm)	18.25 in. (464 mm)
21 in. Shaft w/NFPA		27.25 in.(692 mm)

Dimension tolerances ± 0.1 mm (0.004 in)

Figure 150 - Cat. No. 140G-H-RVM... Rotary Handle Operating Mechanism

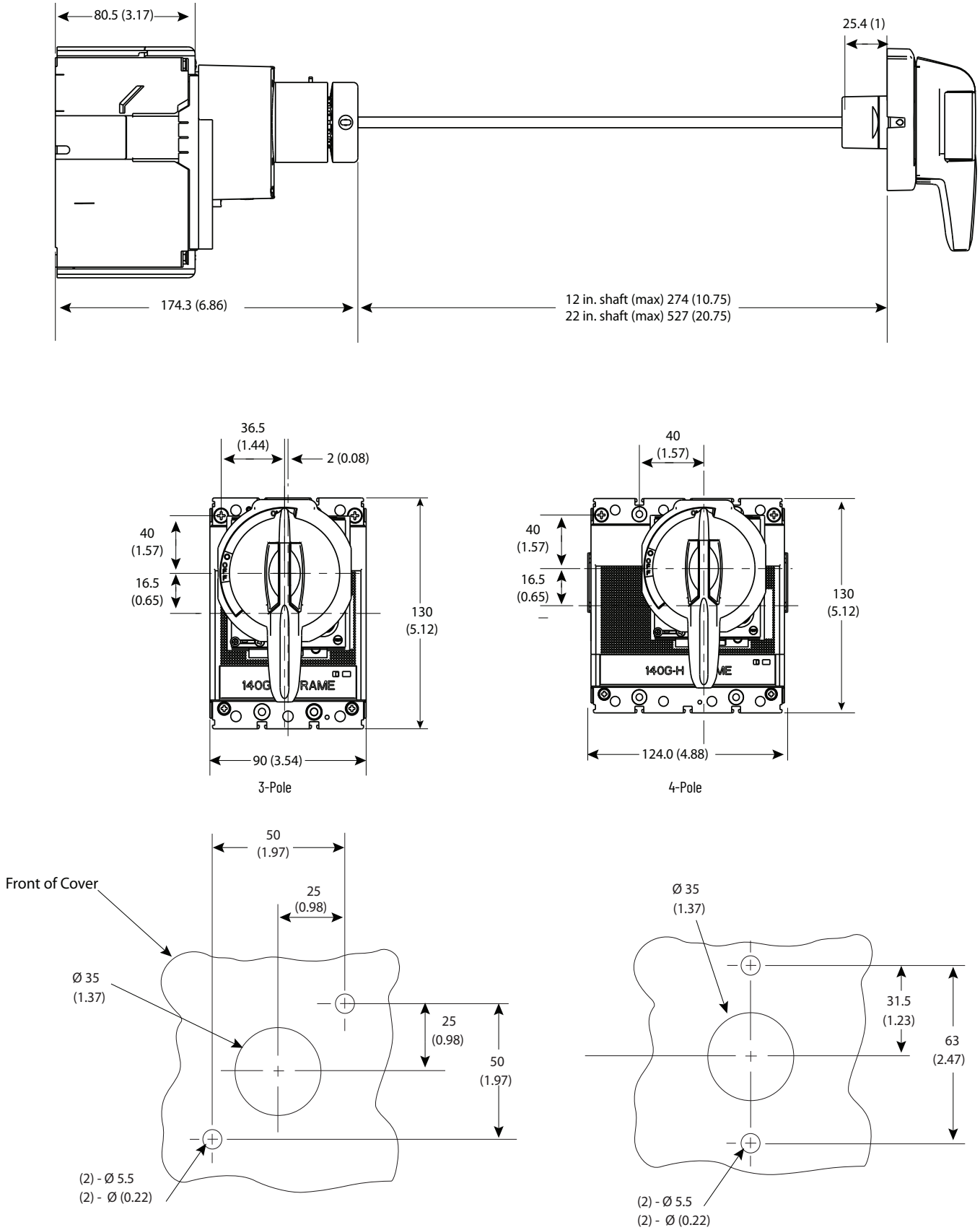

Dimension tolerances ± 0.1 mm (0.004 in)

Figure 151 - Cat. No. 140G-H-EOP... Motor Operator

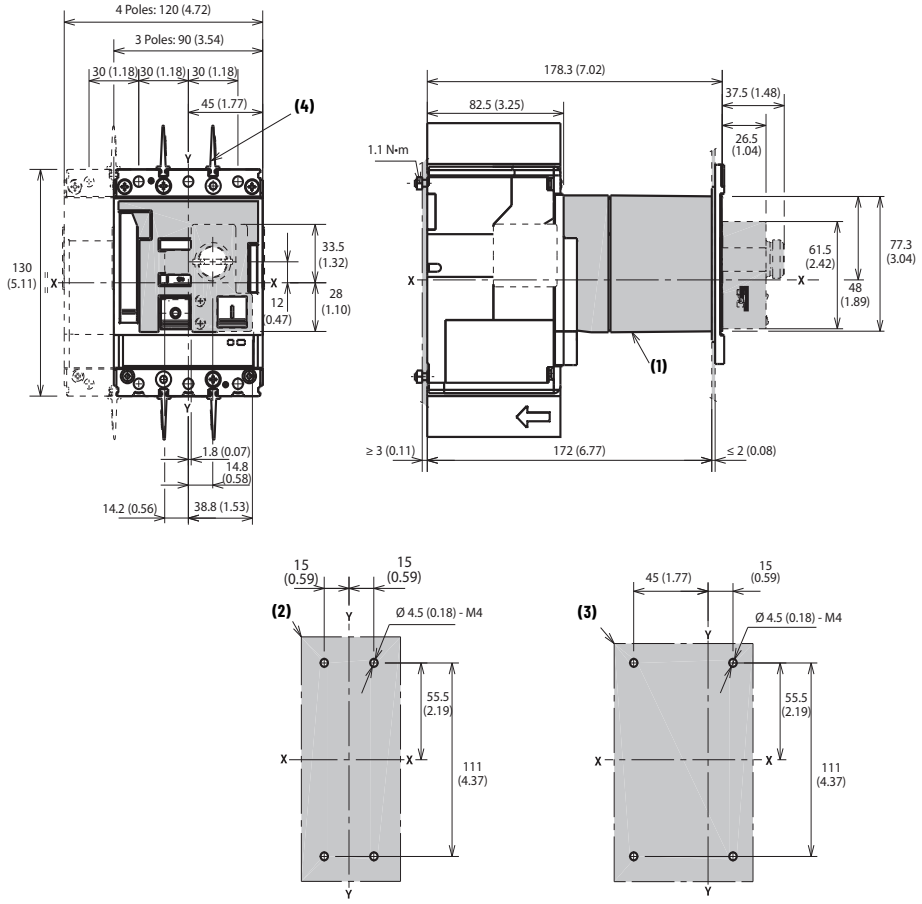

Note	Information
1	Motor operator
2	Drilling template for 3-pole molded case circuit breaker on mounting plate
3	Drilling template for 4-pole molded case circuit breaker on mounting plate
4	Required 25 mm (0.98 in.) insulating phase barriers are provided

Figure 152 - Door Drilling Template

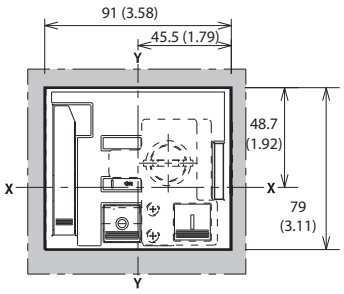

Door drilling template (without escutcheon)

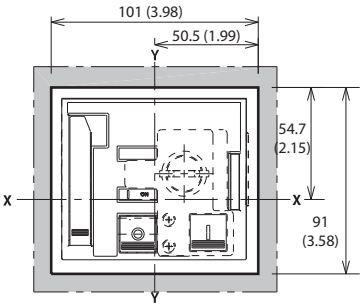

Door drilling template (with escutcheon)

Dimension tolerances ± 0.1 mm (0.004 in)

Figure 153 - Metal Bail Flex Cable Operator and Actuator, Cat. No. 140G-H-FCXB...

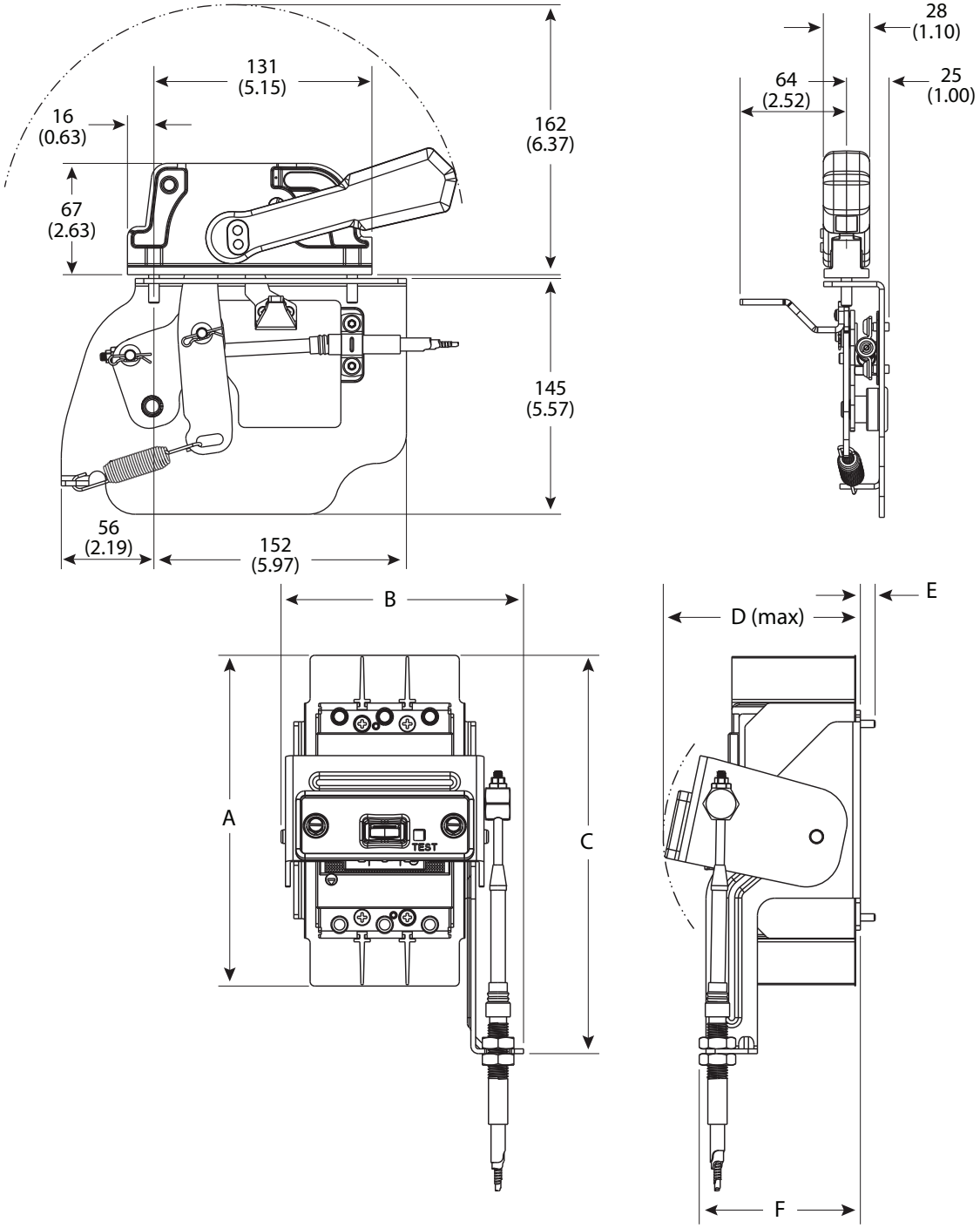

Frame Size	Units	Dimension Designation					
		A	B	C	D	E	F
G	[mm]	183 (7.20)	134 (5.28)	220 (8.67)	109 (4.29)	8 (0.32)	89 (3.51)
H	[mm]	183 (7.20)	145 (5.70)	224 (8.81)	125 (4.90)	8 (0.32)	104 (4.10)
I	[mm]	203 (8.00)	164 (6.44)	235 (9.25)	109 (4.29)	8 (0.32)	88 (3.45)
J	[mm]	212 (8.35)	164 (6.44)	235 (9.25)	125 (4.90)	8 (0.32)	100 (3.95)
K	[mm]	266 (10.50)	197 (7.75)	256 (10.02)	146 (5.75)	11 (0.45)	116 (4.55)

Dimension tolerances ± 0.1 mm (0.004 in)

Figure 154 - Replacement H-Frame Flex Cable Operator and Actuator, Cat. No. 140G-H-FCX...

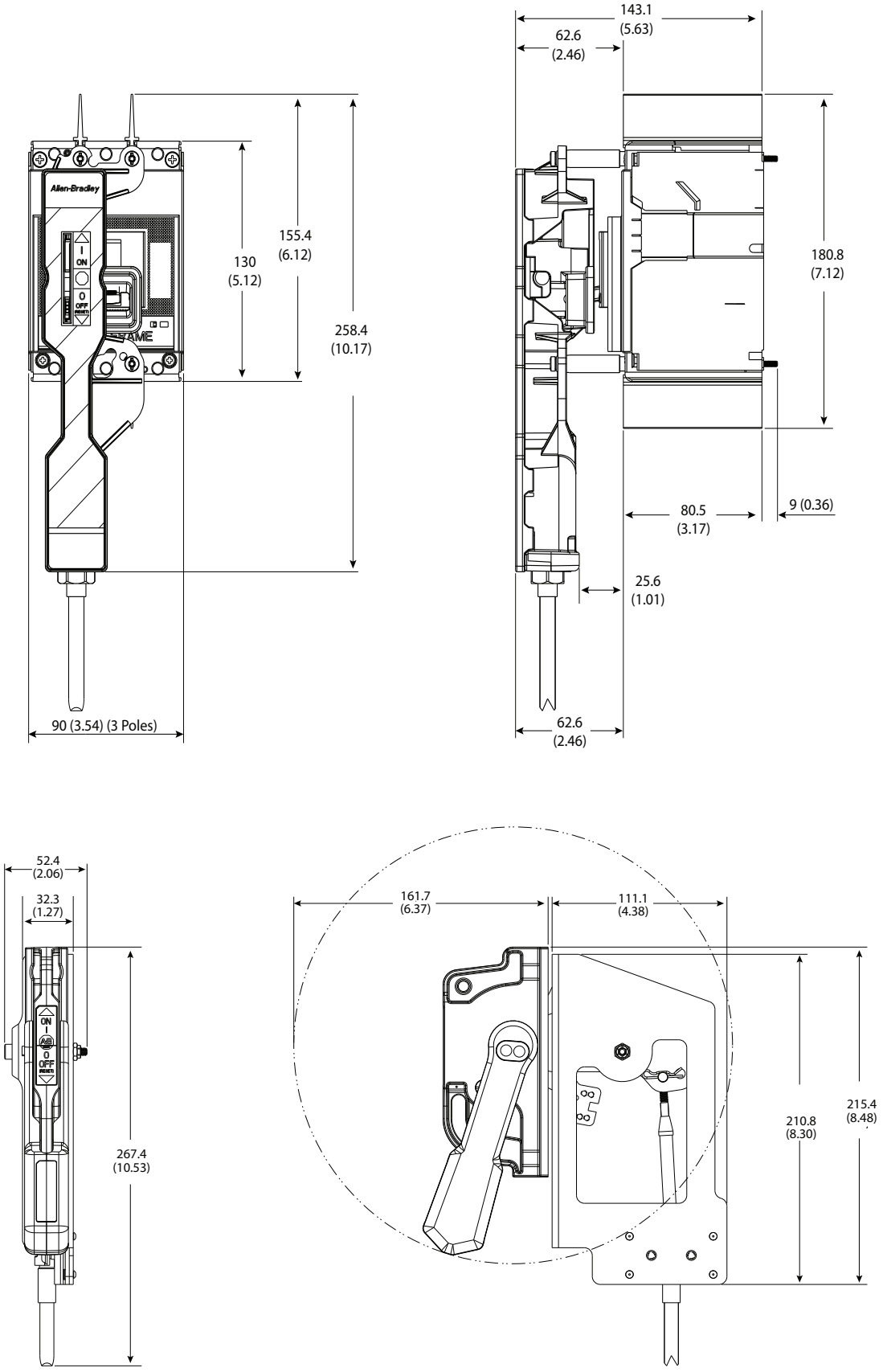

Dimension tolerances ± 0.1 mm (0.004 in)

Figure 155 - Cat. No. 140G-H-ELP1604 Residual Current Release Module

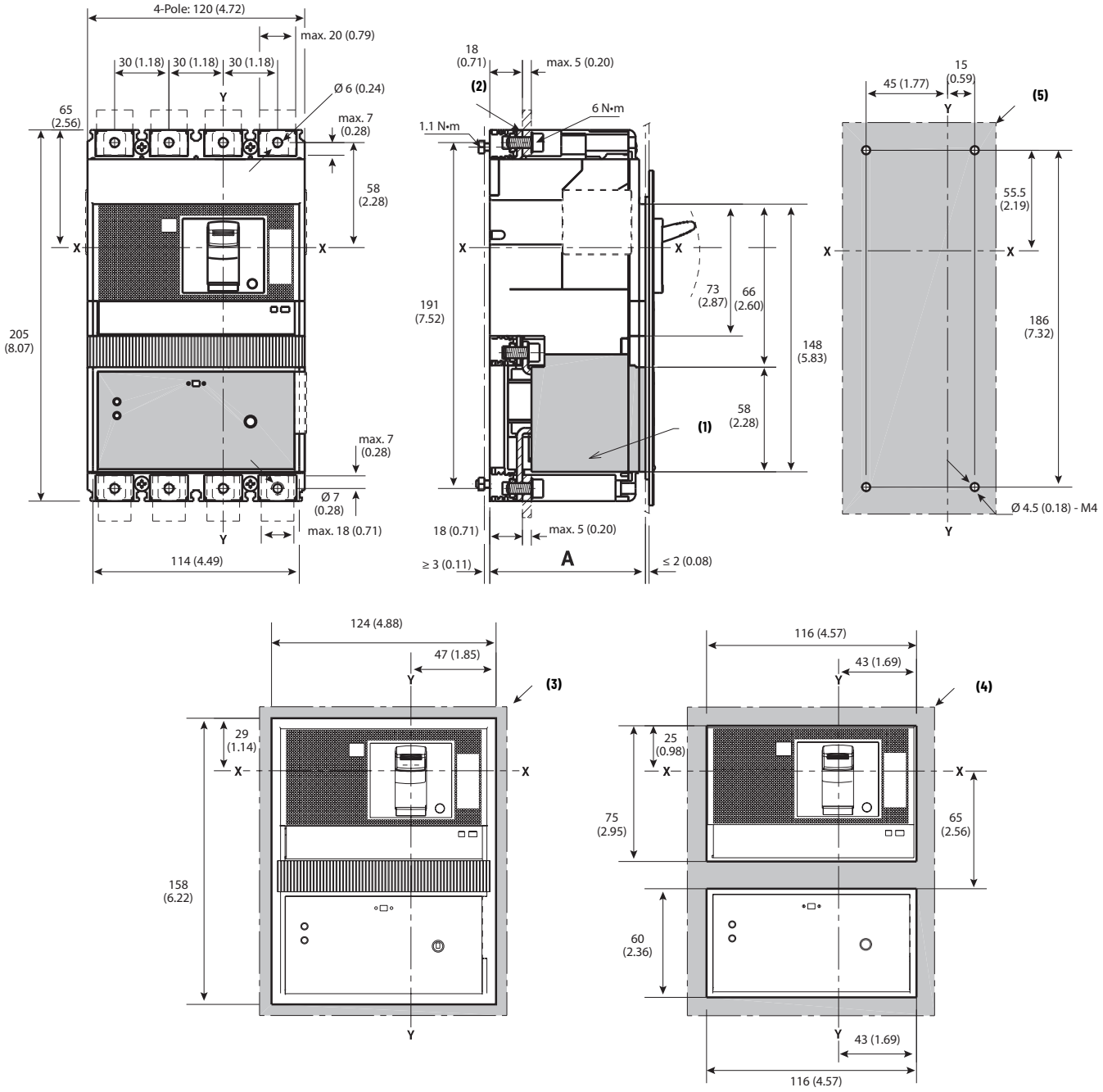

Description	No. of Poles	A
With escutcheon	4	86 (3.39)
Without escutcheon	4	83.5 (3.25)

Note	Information
1	Residual current module
2	End cap terminals for ring or busbar connection
3	Drilling template — door with direct rotary mechanism and escutcheon
4	Drilling template — door with direct rotary mechanism, without escutcheon
5	Drilling template — molded case circuit breaker on mounting plate

Dimension tolerances ± 0.1 mm (0.004 in)

Figure 156 - H-Frame Through-the-door Rotary Operator

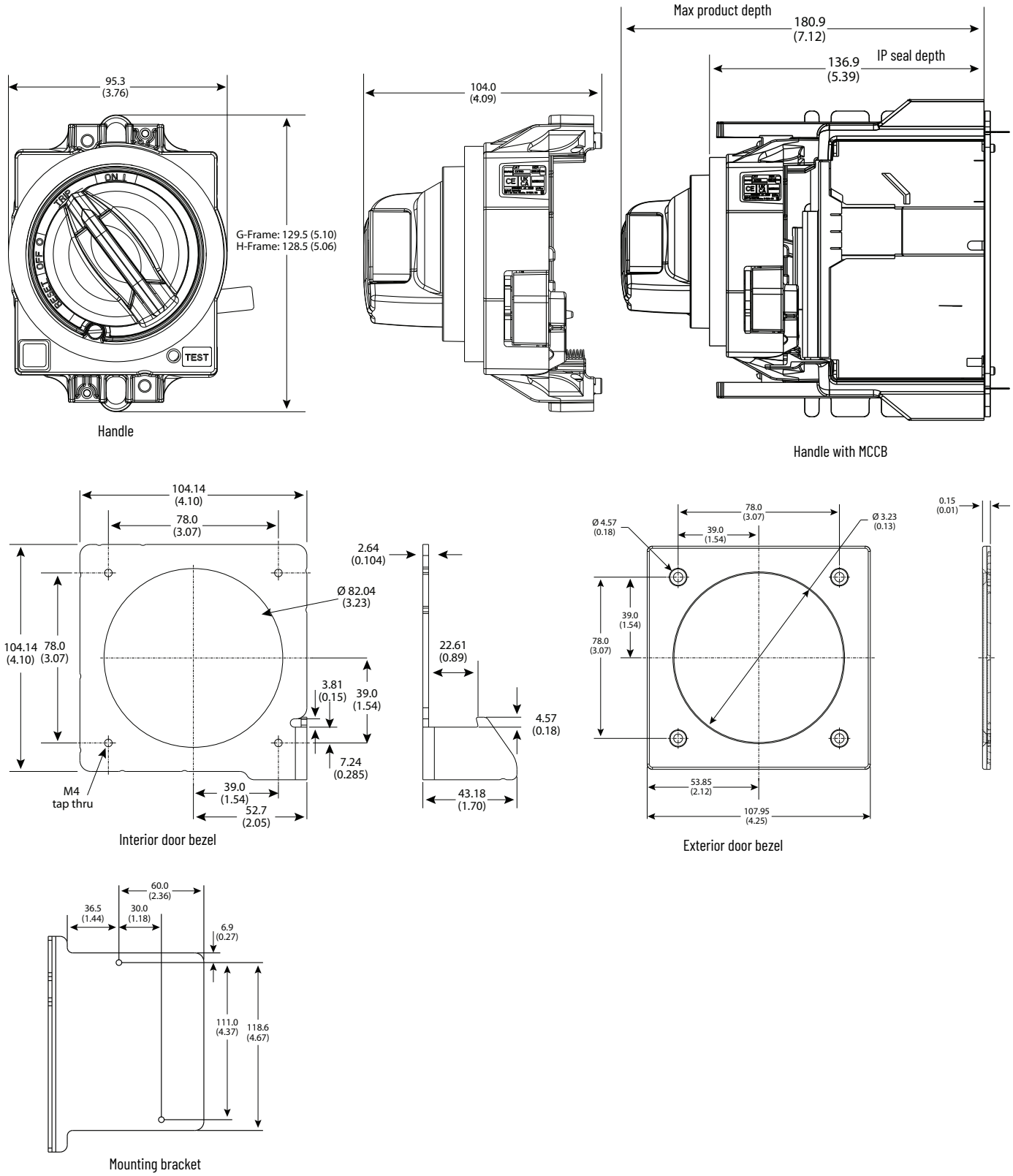

Bulletin 140G/MG I-Frame

Dimensions are in millimeters (inches). Dimensions are not intended to be used for manufacturing purposes.

Dimension tolerances ± 0.1 mm (0.004 in)

Figure 157 - Panel Mounted Molded Case Circuit Breaker

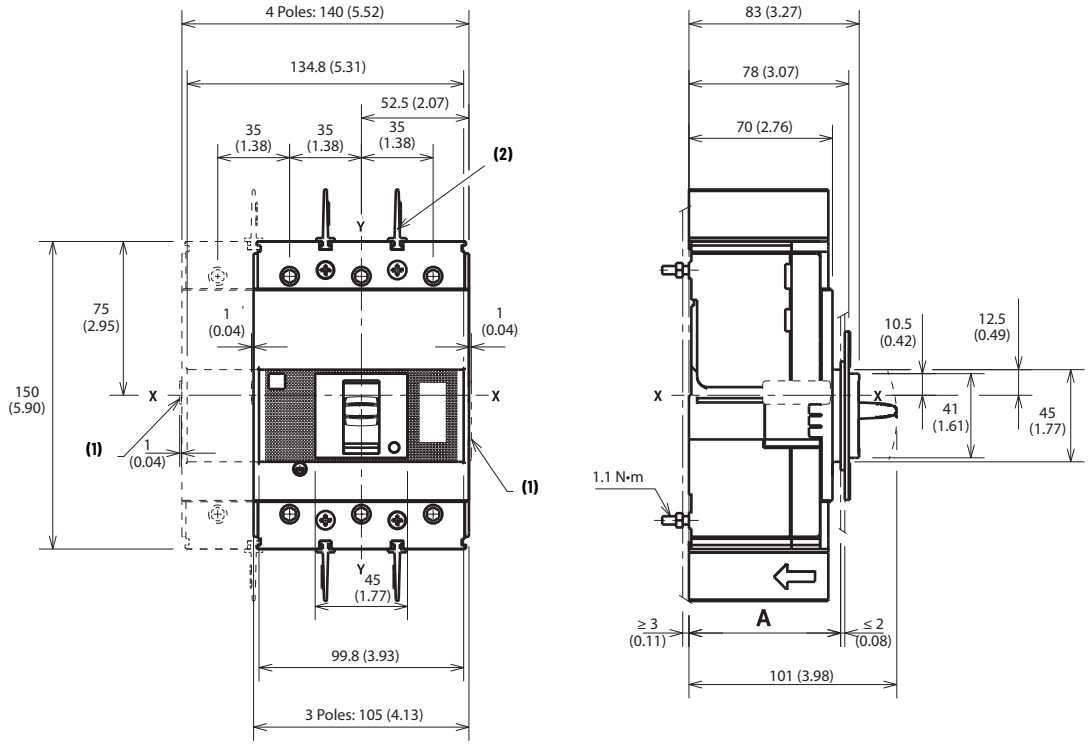

Description	No. of Poles	A
With escutcheon	3...4	74 (2.91)
Without escutcheon	3...4	71 (2.80)
	3...4	79 (3.11)

Note	Information
1	Overall dimensions of optional side covers
2	Required 25 mm insulating phases barriers provided

Dimension tolerances ± 0.1 mm (0.004 in)

Figure 158 - DIN Rail Mounted Molded Case Circuit Breaker (Series A)

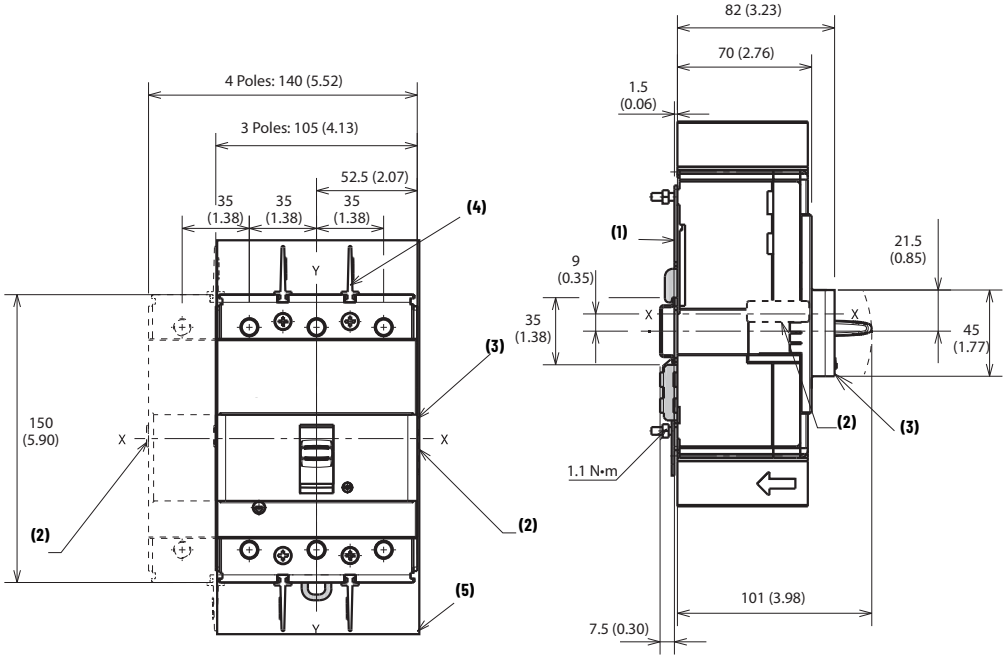

Note	Information
1	Mounting bracket
2	Optional side covers
3	Optional front cover for DIN Rail
4	Required 25 mm (0.98 in.) insulating phase barriers are provided
5	Flexible insulator

Figure 159 - Drilling Template for Molded Case Circuit Breaker Mounting

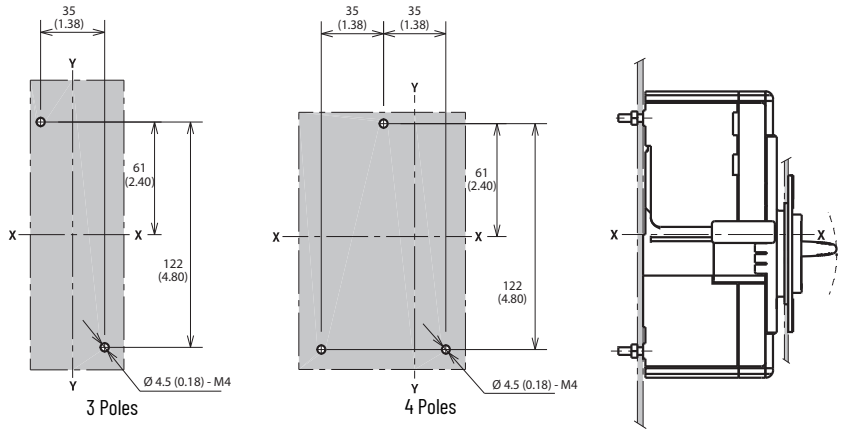

Dimension tolerances ± 0.1 mm (0.004 in)

Figure 160 - Cat. Nos. 140G-I-ECM, -ECM4 Terminals

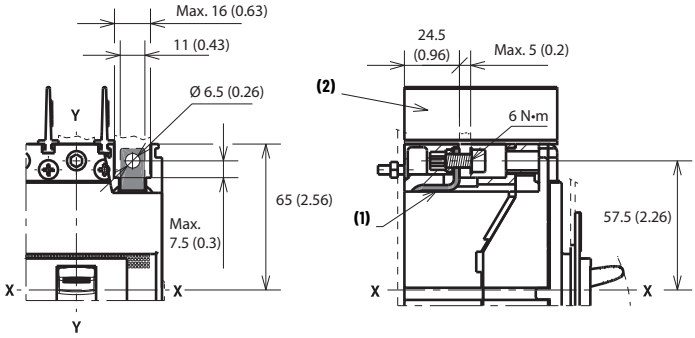

Note	Information
1	End cap terminals for ring or busbar connection
2	Required 25 mm (0.98 in.) insulating phase barriers are provided

Figure 161 - Cat. Nos. 140G-I-EXS3, -EXS4 Terminals

U_e> 440V requires supplied insulator panel (not shown in illustration)

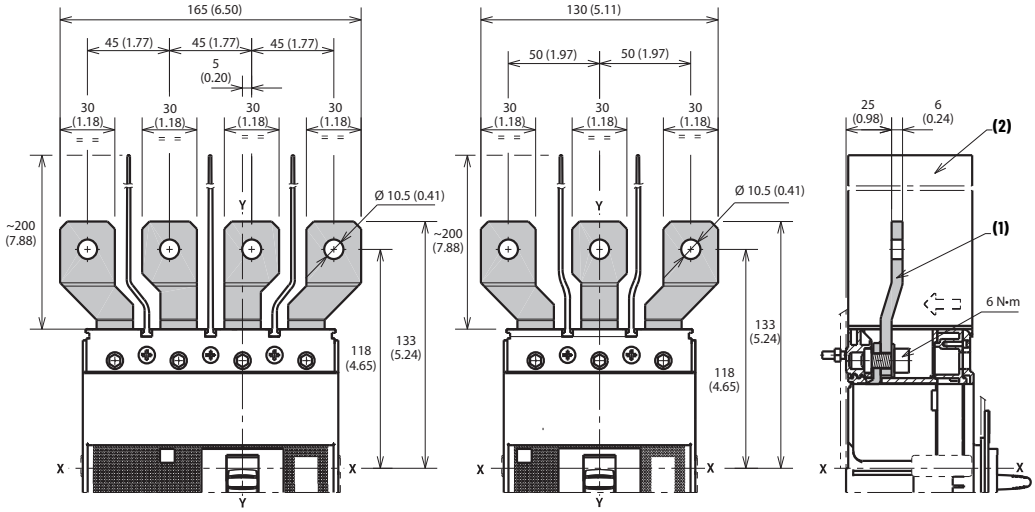

Note	Information
1	Extended spread terminals
2	Required 200 mm (7.87 in.) insulating phase barriers are provided

Dimension tolerances ± 0.1 mm (0.004 in)

Figure 162 - Cat. Nos. 140G-I-EXT3, -EXT4 Extended Terminals

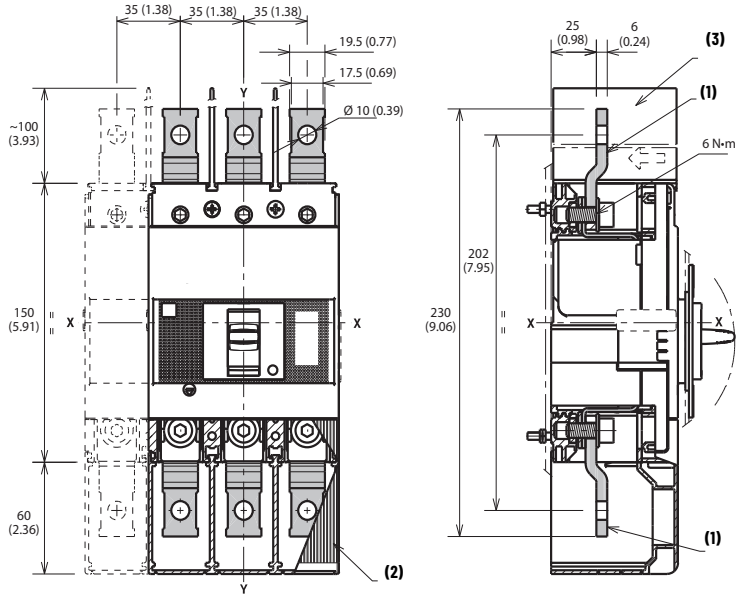

Note	Information
1	Extended terminals
2	Optional terminal covers with IP40 protection are available
3	Required 100 mm (3.94 in.) insulating phase barriers are provided

Figure 163 - Cat. Nos. 140G-I-TLA1A3, -TLA1A4 Terminals

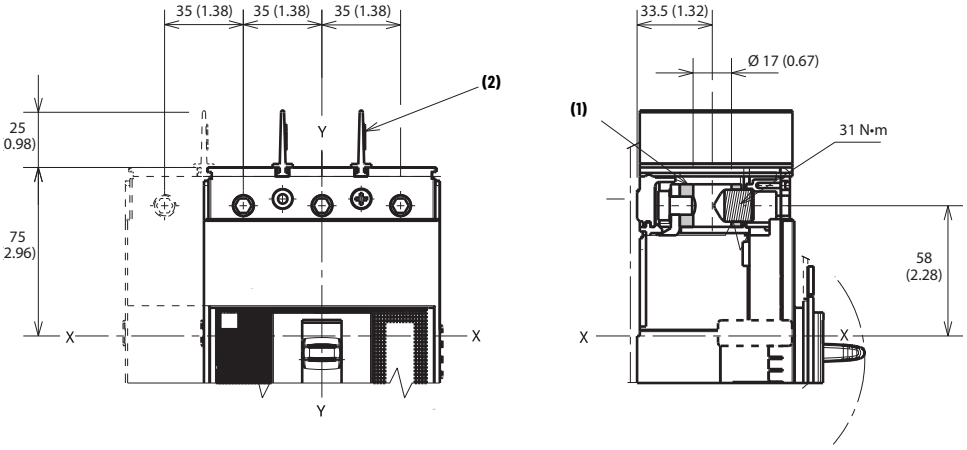

Note	Information
1	30...150 mm^2 terminals
2	Required 25 mm (0.98 in.) insulating phase barriers are provided

Dimension tolerances ± 0.1 mm (0.004 in)

Figure 164 - Cat. Nos. 140G-I-TLA3, -TLA4 Terminals

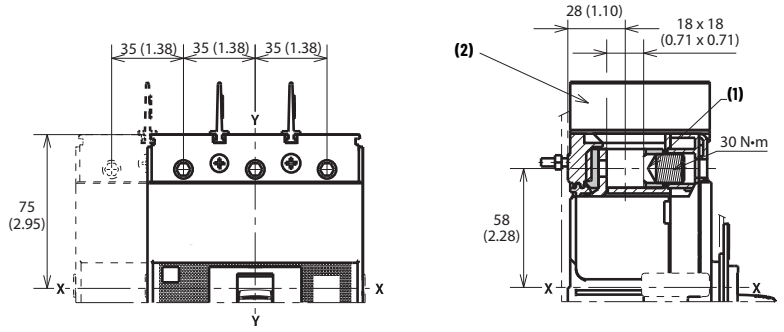

Note	Information
1	Terminals for CuAl wire.
2	Required 25 mm (0.98 in.) insulating phase barriers are provided

Figure 165 - Cat. Nos. 140G-I-TLC13, -TLC14 Terminals

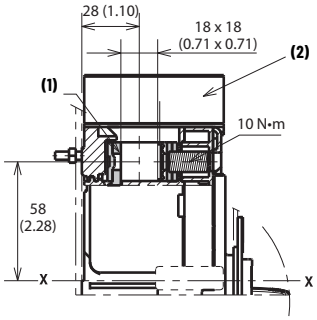

Note	Information
1	Terminals for copper wire
2	Required 25 mm (0.98 in.) insulating phase barriers are provided

Figure 166 - Cat. Nos. 140G-I-MTL63, -MTL64 Terminals

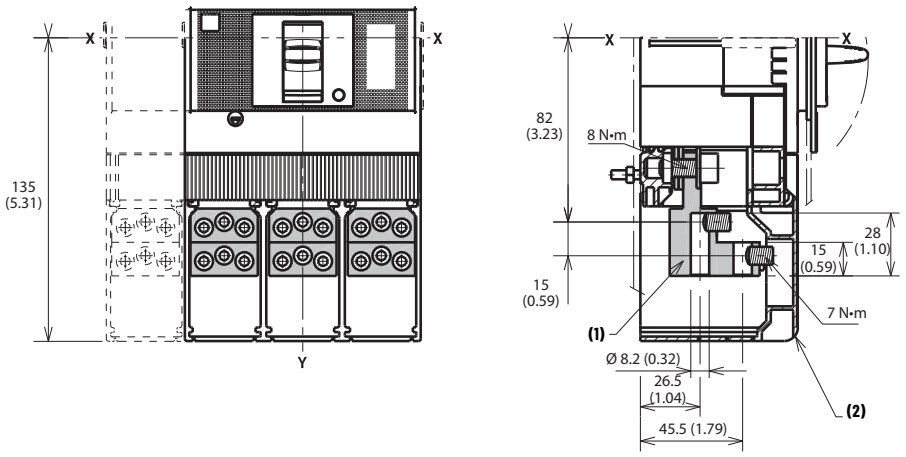

Note	Information
1	Multi-cable terminal lugs
2	Required 25 mm insulating phase barriers. Optional terminal covers with IP40 protection are available

Dimension tolerances ± 0.1 mm (0.004 in)

Figure 167 - Cat. No. 140G-G-RMB, -RMY Direct Rotary Operating Handle (For I- and G-Frame Molded Case Circuit Breaker)

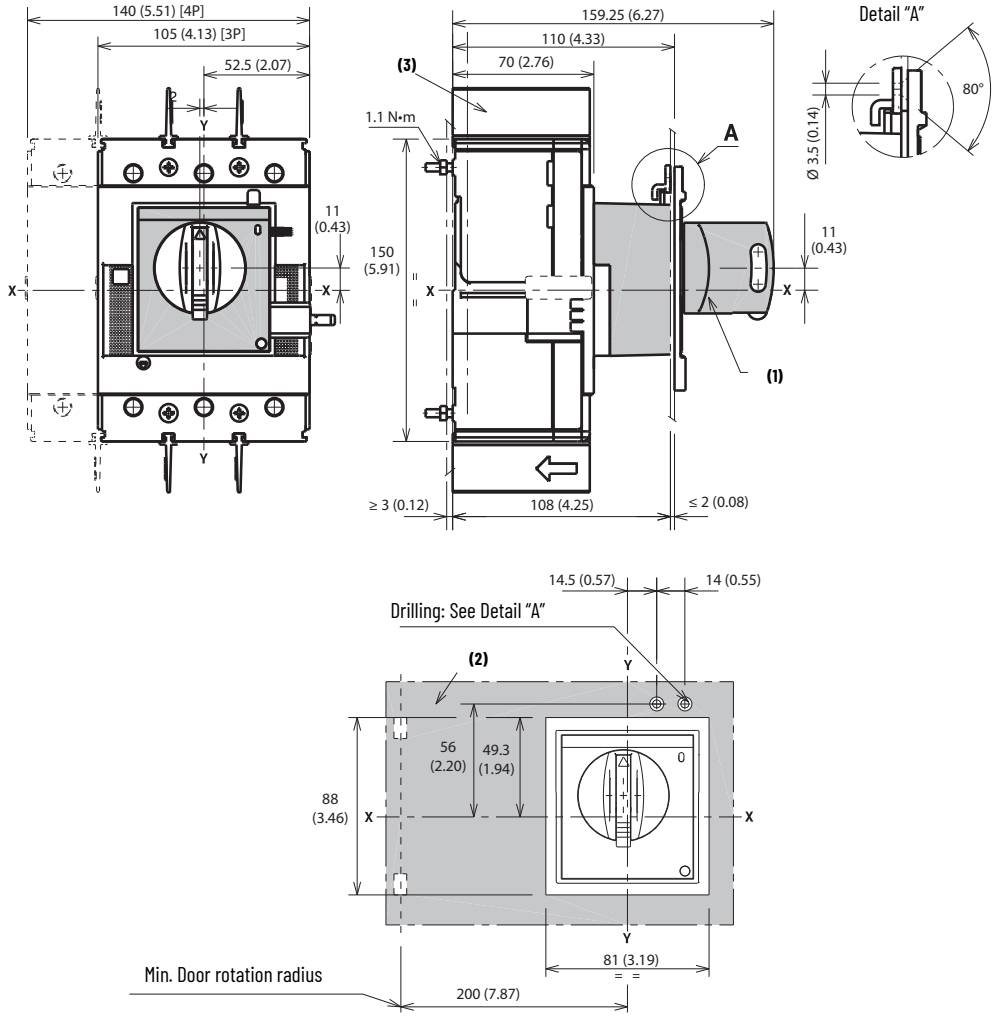

Note	Information
1	Rotary handle operating mechanism on molded case circuit breaker
2	Door drilling template with direct rotary handle
3	Required 25 mm (0.98 in.) insulating phase barriers are provided

Figure 168 - 140G-G-RVM... Minimum/Maximum Enclosure Depth (for I-Frame Molded Case Circuit Breaker)

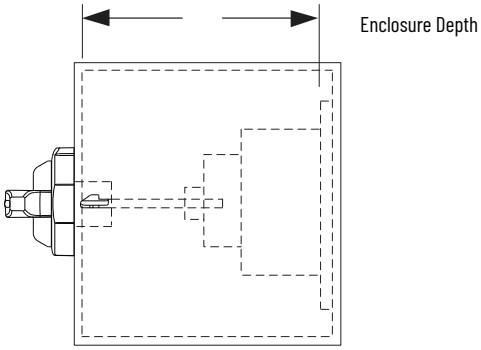

This figure depicts the minimum and maximum enclosure sizes that accommodate the MCCB, operator, and handle. See Figure 169 for overall assembly dimensions and handle cutout.

Description	Minimum	Maximum
12 in. Shaft	7.25 in. (191 mm)	17.75 in. (451 mm)
21 in. Shaft		26.75 in. (679 mm)

Description	Minimum	Maximum
12 in. Shaft w/NFPA	9 in. (229 mm)	17.75 in. (451 mm)
21 in. Shaft w/NFPA		26.75 in. (679 mm)

Dimension tolerances ± 0.1 mm (0.004 in)

Figure 169 - Cat. No. 140G-G-RVM... Variable Depth Rotary Handle Operating Mechanism (For I-Frame Molded Case Circuit Breaker)

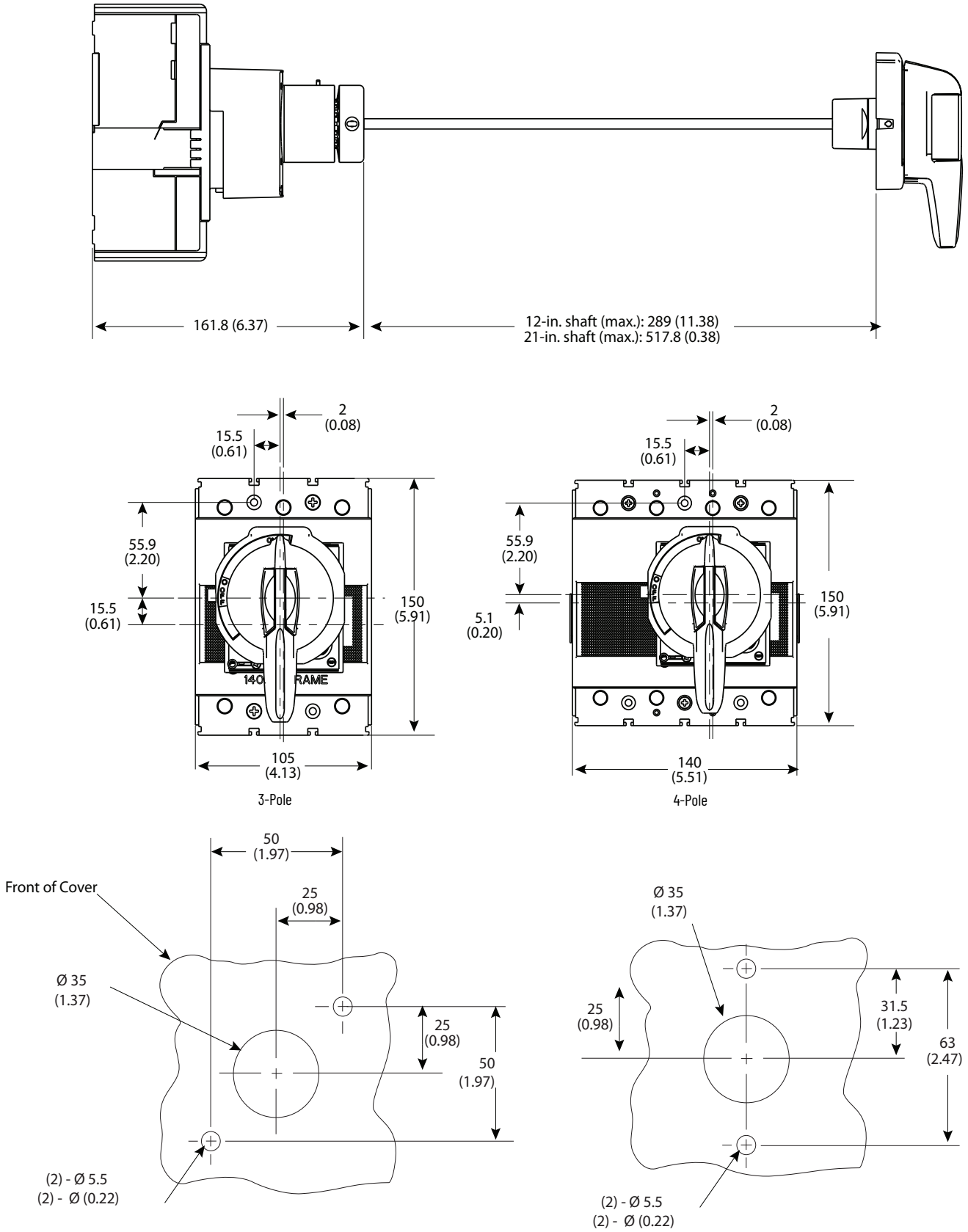

Dimension tolerances ± 0.1 mm (0.004 in)

Figure 170 - Cat. No. 140G-G-EOP... Motor Operator (I-Frame)

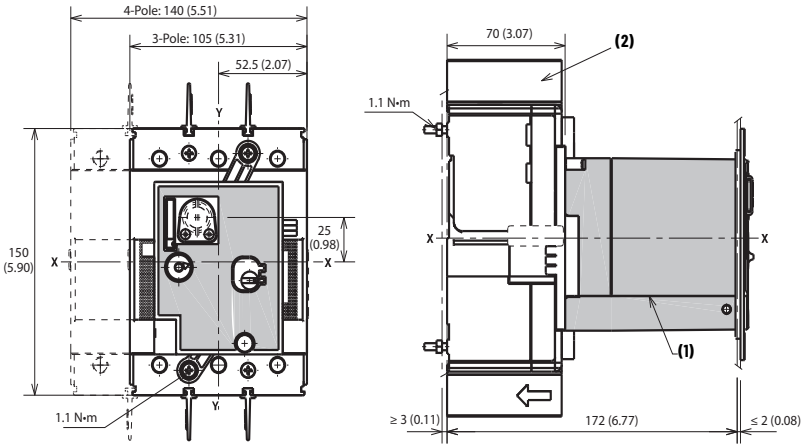

Note	Information
1	Motor operator
2	Required 25 mm (0.98 in.) insulating phase barriers are provided

Figure 171 - Door Drilling Template

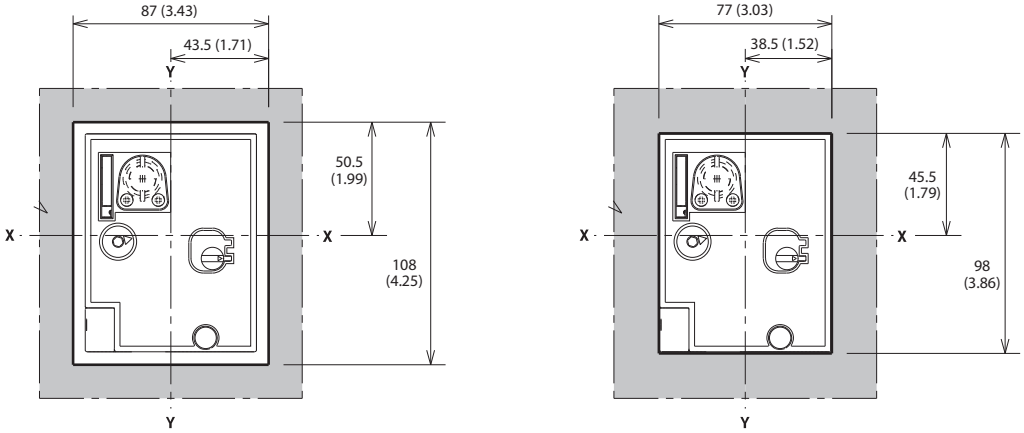

With Escutcheon

Without Escutcheon

Dimension tolerances ± 0.1 mm (0.004 in)

Figure 172 - Cat. No. 140G-I-ELP2503 Residual Current Release Module

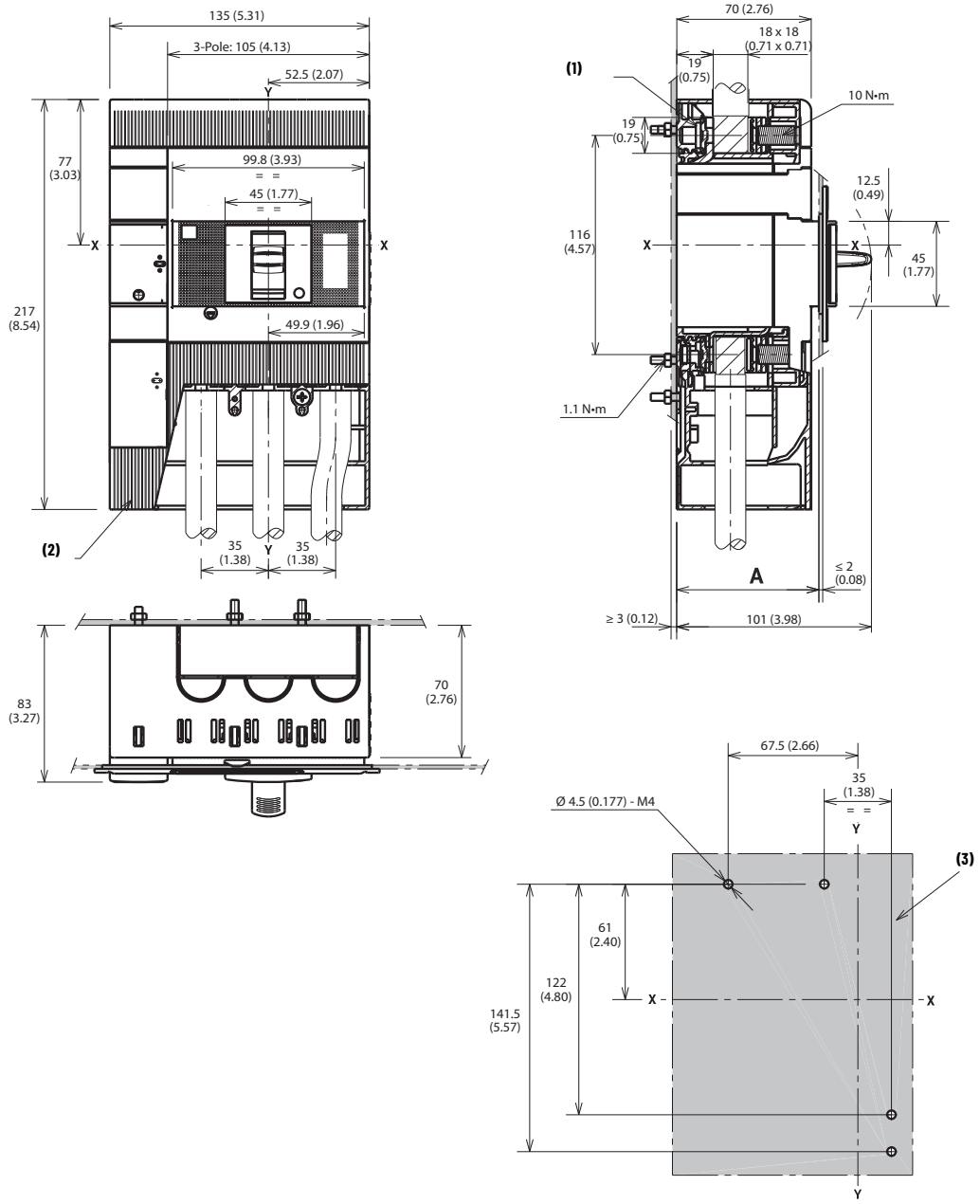

Description	No. of Poles	A
With escutcheon	3	74 (2.91)
Without escutcheon	3	71 (2.80)

Note	Information
1	Terminals for cable connection
2	Terminal covers with IP40 protection
3	Drilling template — molded case circuit breaker on mounting plate

Dimension tolerances ± 0.1 mm (0.004 in)

Figure 173 - Cat. No. 140G-I-ELP2504 Residual Current Release Module for 4-Pole Molded Case Circuit Breakers

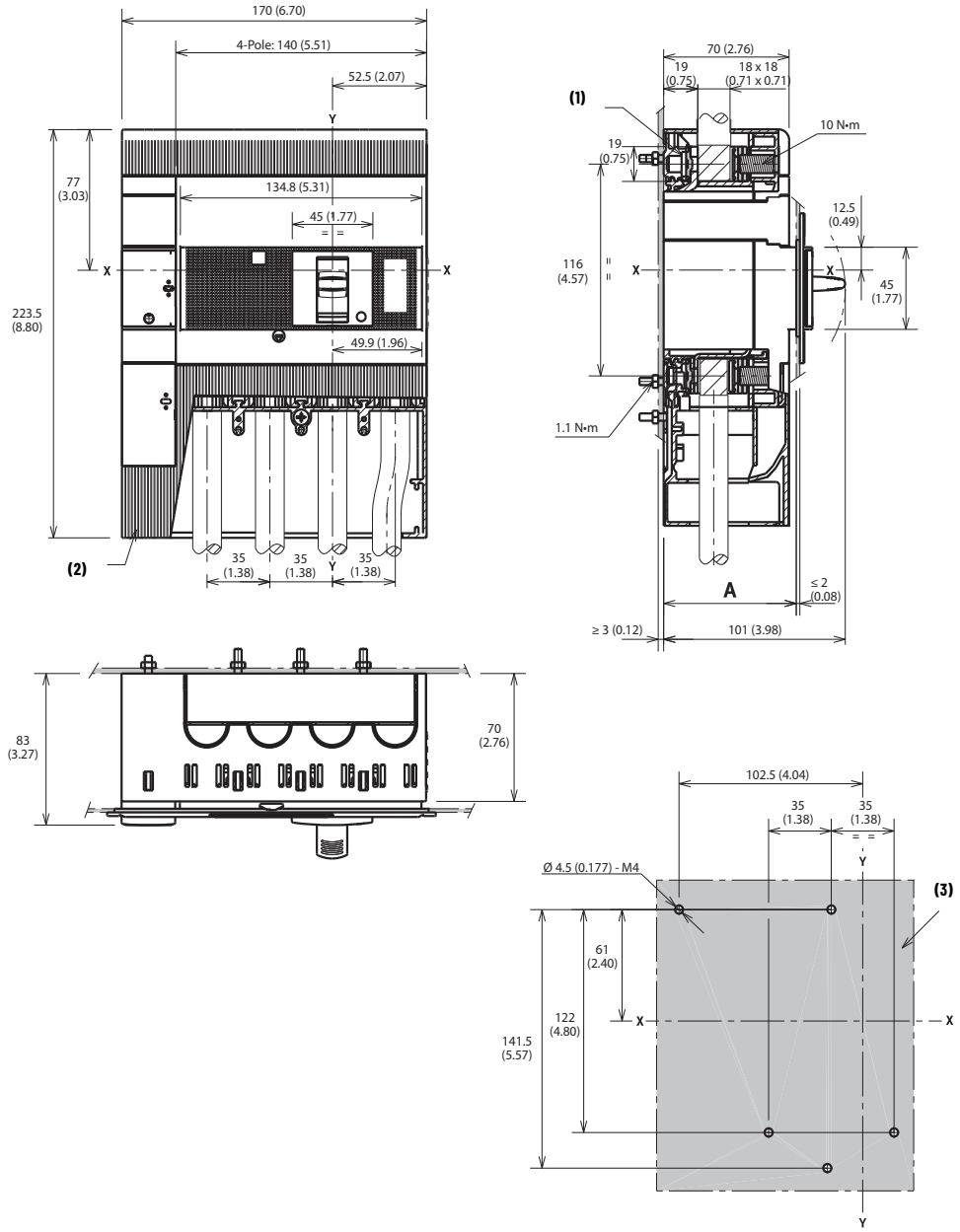

Description	No. of Poles	A
With escutcheon	4	74 (2.91)
Without escutcheon	4	71 (2.80)

Note	Information
1	Terminals for cable connection
2	Terminal covers with IP40 protection
3	Drilling template — molded case circuit breaker on mounting plate

Dimension tolerances ± 0.1 mm (0.004 in)

Figure 174 - Metal Bail Flex Cable Operator and Actuator, Cat. No. 140G-I-FCXB...

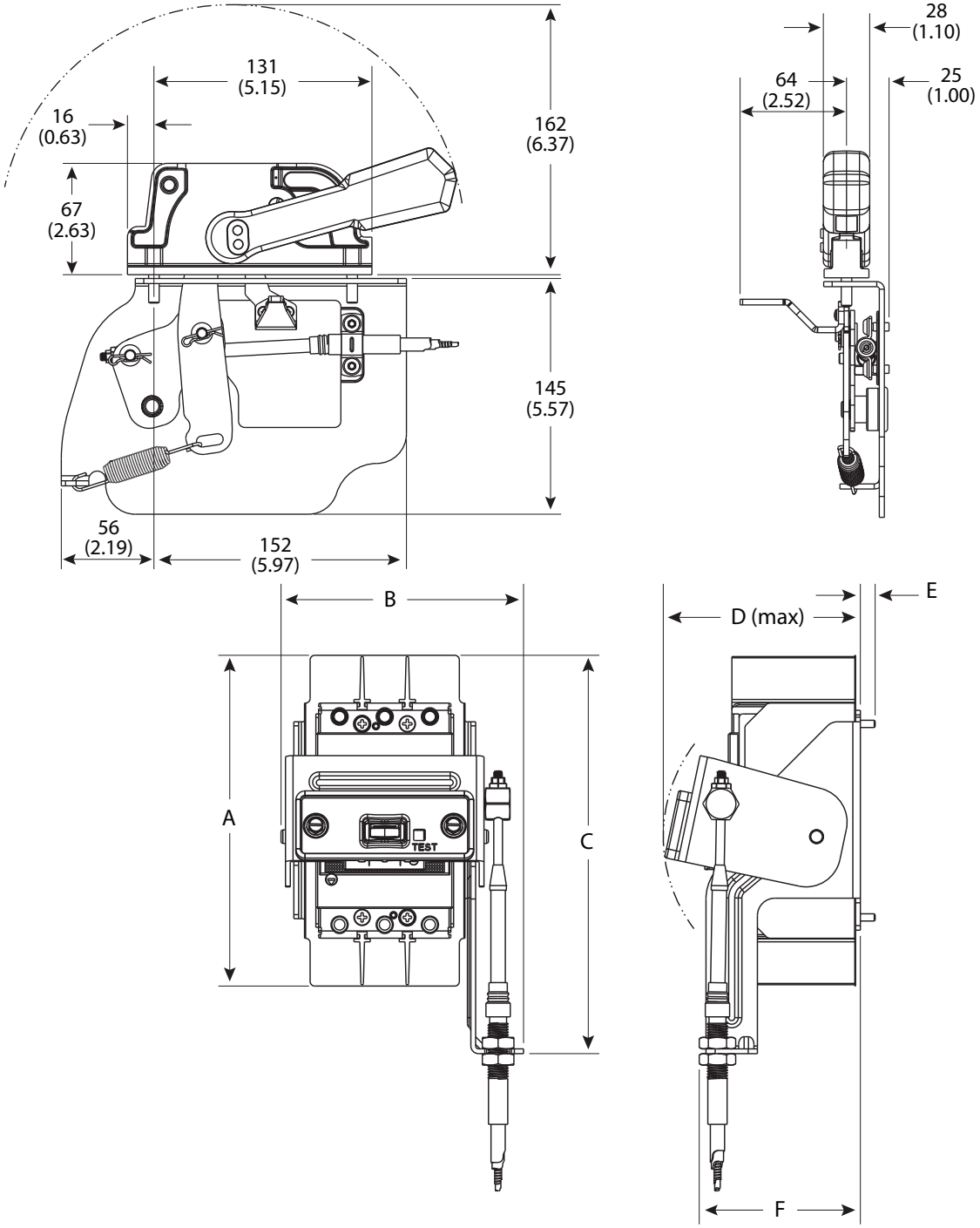

Frame Size	Units	Dimension Designation					
		A	B	C	D	E	F
G	[mm]	183 (7.20)	134 (5.28)	220 (8.67)	109 (4.29)	8 (0.32)	89 (3.51)
H	[mm]	183 (7.20)	145 (5.70)	224 (8.81)	125 (4.90)	8 (0.32)	104 (4.10)
I	[mm]	203 (8.00)	164 (6.44)	235 (9.25)	109 (4.29)	8 (0.32)	88 (3.45)
J	[mm]	212 (8.35)	164 (6.44)	235 (9.25)	125 (4.90)	8 (0.32)	100 (3.95)
K	[mm]	266 (10.50)	197 (7.75)	256 (10.02)	146 (5.75)	11 (0.45)	116 (4.55)

Dimension tolerances ± 0.1 mm (0.004 in)

Figure 175 - Replacement I-Frame Flex Cable Operator and Actuator, Cat. No. 140G-I-FCX...

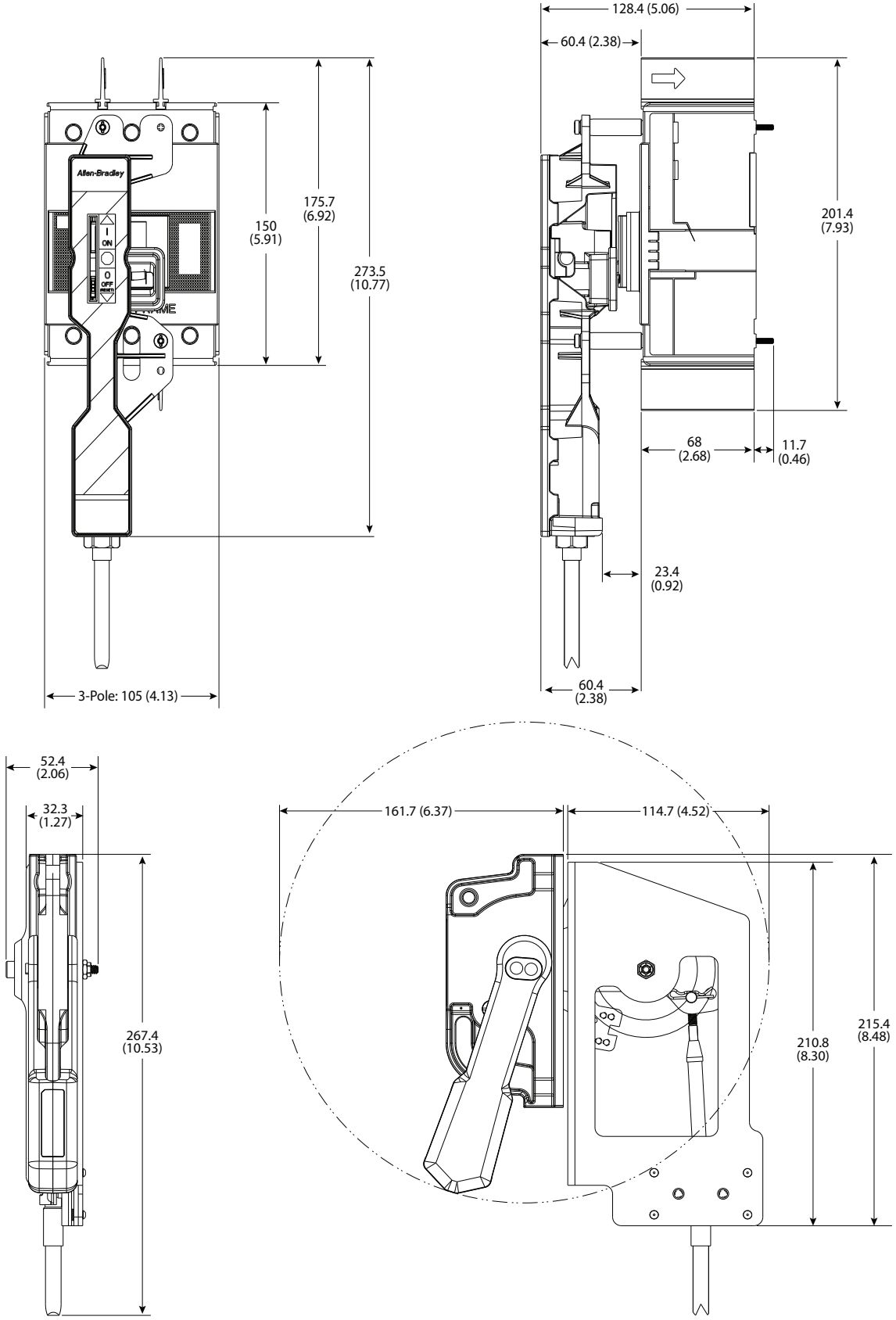

Bulletin 140G/MG J-Frame

Dimensions are in millimeters (inches). Dimensions are not intended to be used for manufacturing purposes.

Dimension tolerances ± 0.1 mm (0.004 in)

Figure 176 - Panel Mounted Molded Case Circuit Breaker

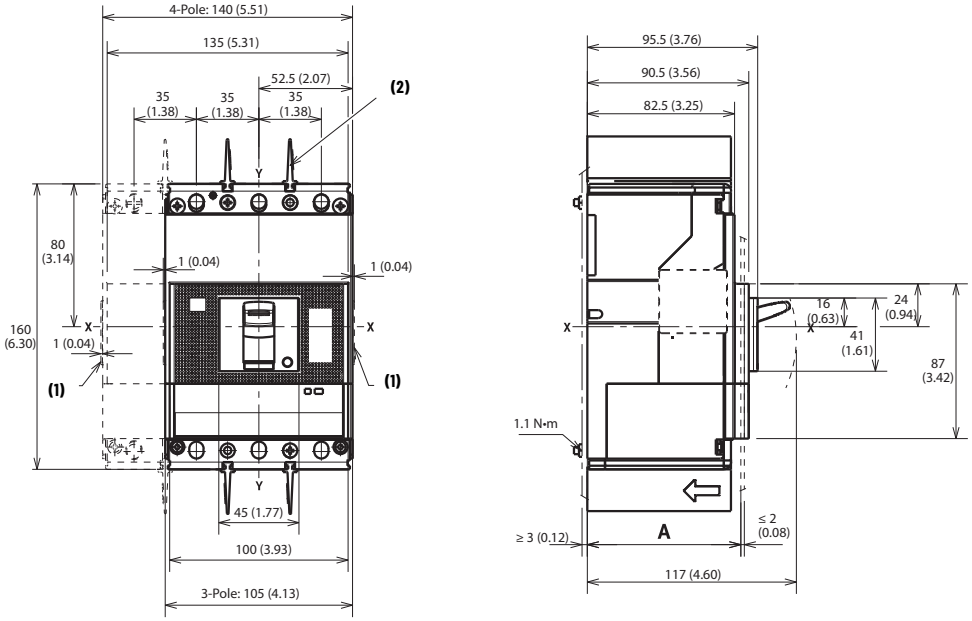

Description	No. of Poles	A
With escutcheon	3...4	86 (3.39)
Without escutcheon	3...4	83.5 (3.29)
	3...4	91.5 (3.60)

Note	Information
1	Overall dimensions of optional wiring ducts
2	Required 25 mm (0.98 in.) insulating phase barriers are provided

Dimension tolerances ± 0.1 mm (0.004 in)

Figure 177 - DIN Rail Mounted Molded Case Circuit Breaker (Series A)

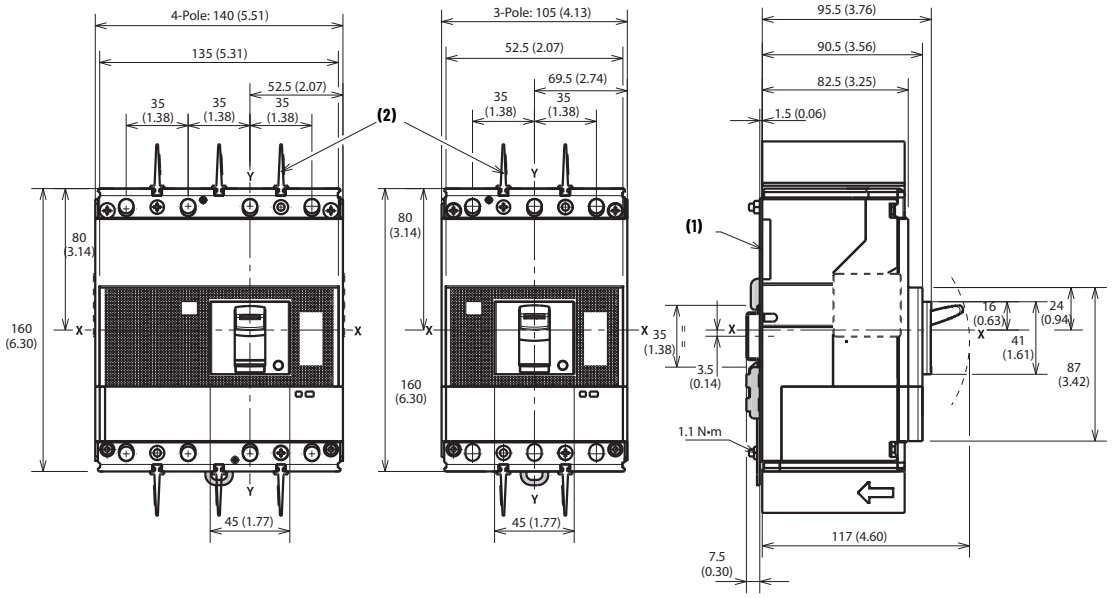

Note	Information
1	Mounting bracket
2	Required 25 mm (0.98 in.) insulating phase barriers are provided

Figure 178 - Drilling Template for Molded Case Circuit Breaker Mounting

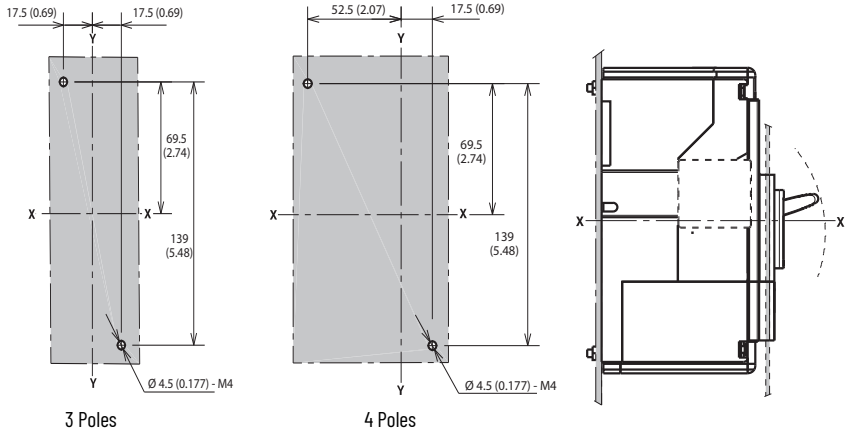

Figure 179 - Cat. Nos. 140G-J-ECM, -ECM4 Terminals

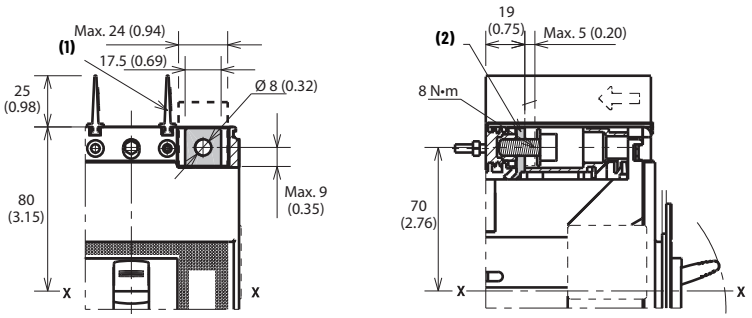

Note	Information
1	Required 25 mm (0.98 in.) insulating phase barriers are provided
2	End cap terminals for ring or busbar connection

Dimension tolerances ± 0.1 mm (0.004 in)

Figure 180 - Cat. Nos. 140G-J-EXT3, -EXT4 Extended Terminals

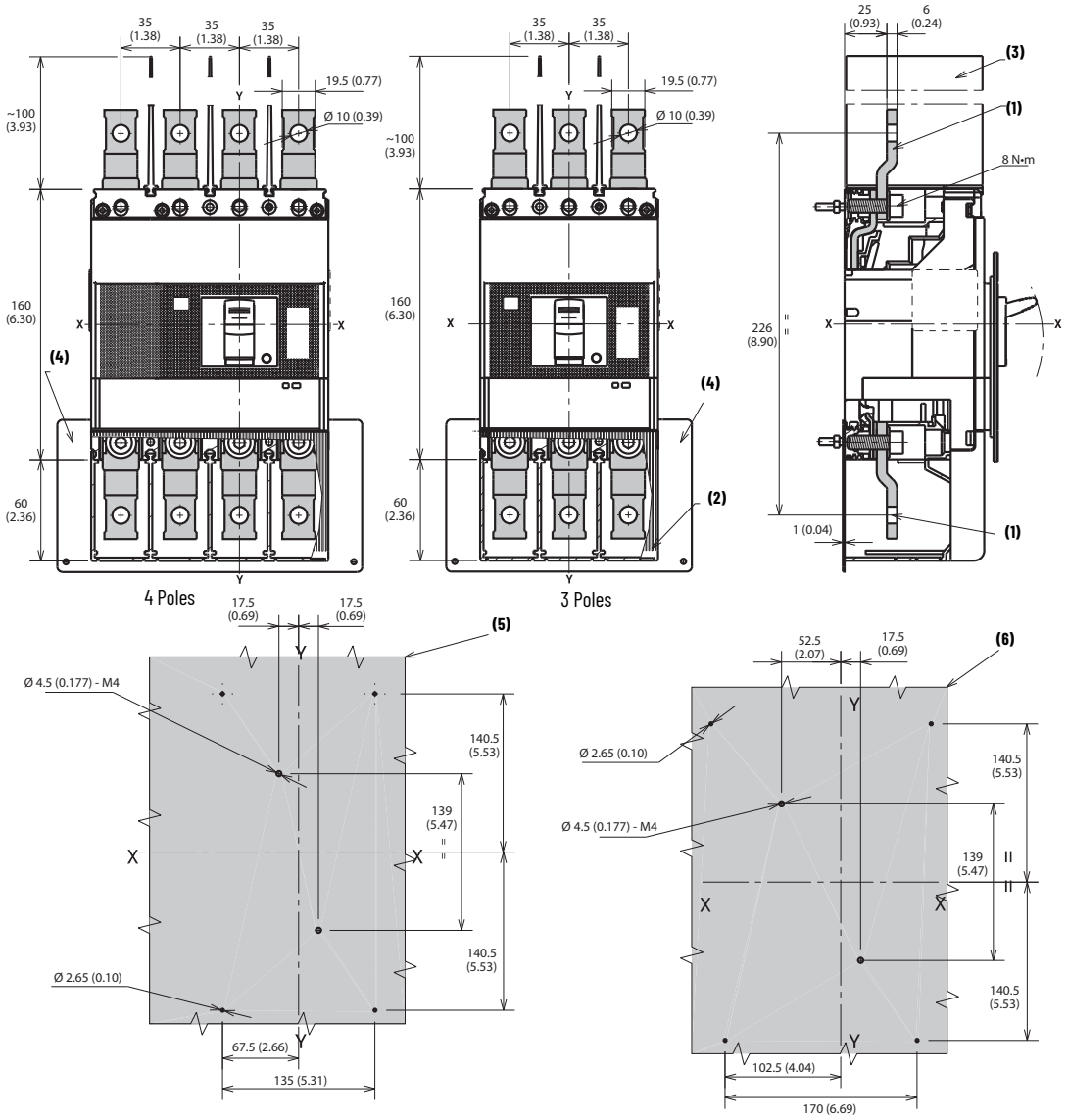

Note	Information
1	Extended terminals
2	Optional terminal covers with IP40 protection are available
3	Required 100 mm (3.94 in.) insulating phase barriers are provided
4	Supplied insulator panel; required for U_e > 440V applications
5	Drilling template for 3-pole molded case circuit breaker
6	Drilling template for 4-pole molded case circuit breaker

Dimension tolerances ± 0.1 mm (0.004 in)

Figure 181 - Cat. Nos. 140G-J-EXS3, -EXS4 Spreader Terminals

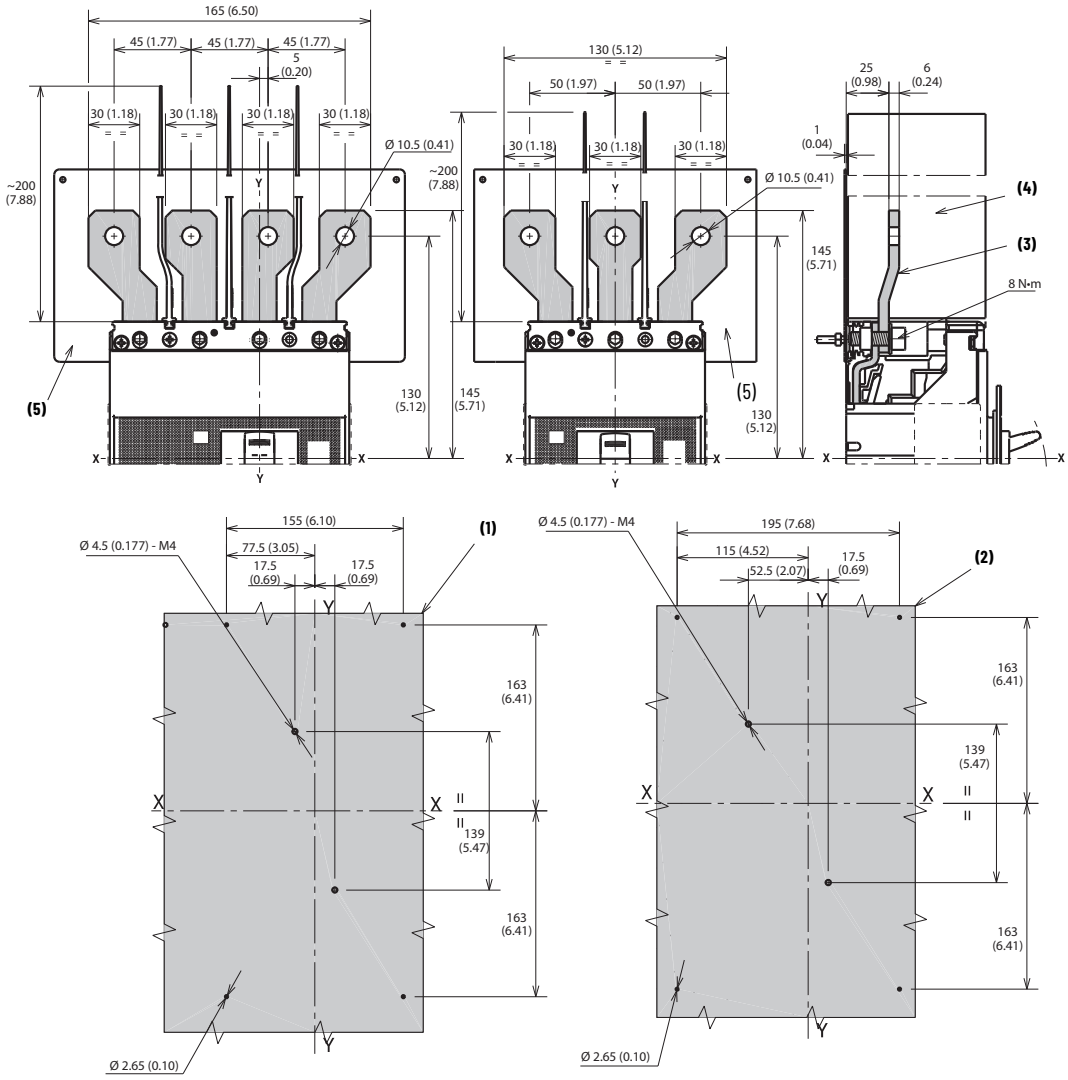

Note	Information
1	Drilling template for 3-pole molded case circuit breaker
2	Drilling template for 4-pole molded case circuit breaker
3	Extended spread terminals
4	Required 200 mm (7.87 in.) insulating phase barriers are provided
5	Supplied insulator panel; required for U_e> 440V applications

Figure 182 - Cat. Nos. 140G-J-TLA13, -TLA14 Terminal Lugs

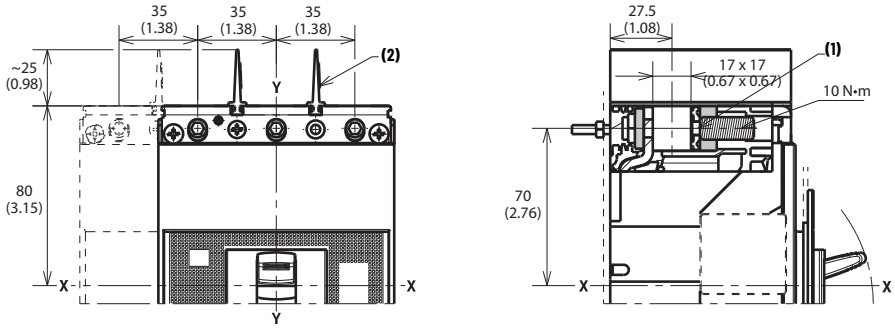

Note	Information
1	Terminals for aluminum or copper wire
2	Required 25 mm (0.98 in.) insulating phase barriers are provided

Dimension tolerances ± 0.1 mm (0.004 in)

Figure 183 - Cat. Nos. 140G-J-TLC13, -TLC14 Terminal Lugs

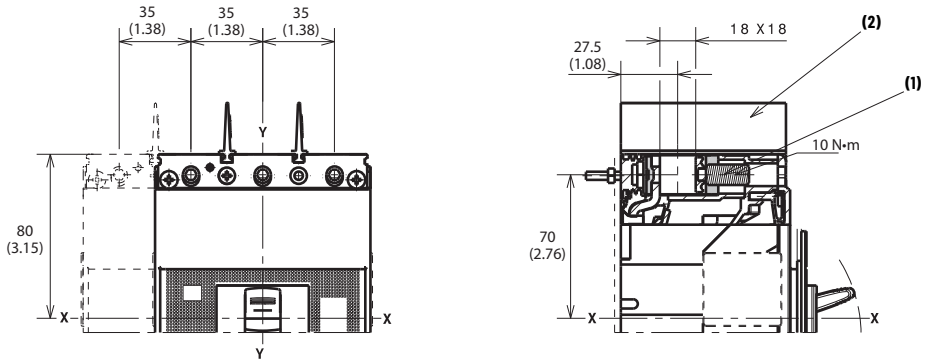

Note	Information
1	Terminals for copper wire
2	Required 25 mm (0.98 in.) insulating phase barriers are provided

Figure 184 - Cat. Nos. 140G-J-MTL63, -MTL64 Terminals

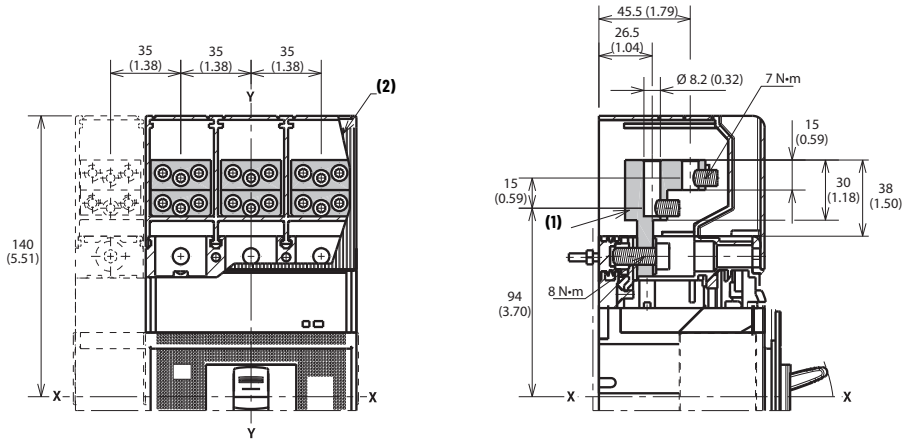

Note	Information
1	Multi-cable terminal lugs
2	Required 25 mm insulating phase barriers. Optional terminal covers with IP40 protection are available

Dimension tolerances ± 0.1 mm (0.004 in)

Figure 185 - Cat. No. 140G-H-RMB, -RMY Direct Rotary Operating Handle (For H- and J-Frame Molded Case Circuit Breaker)

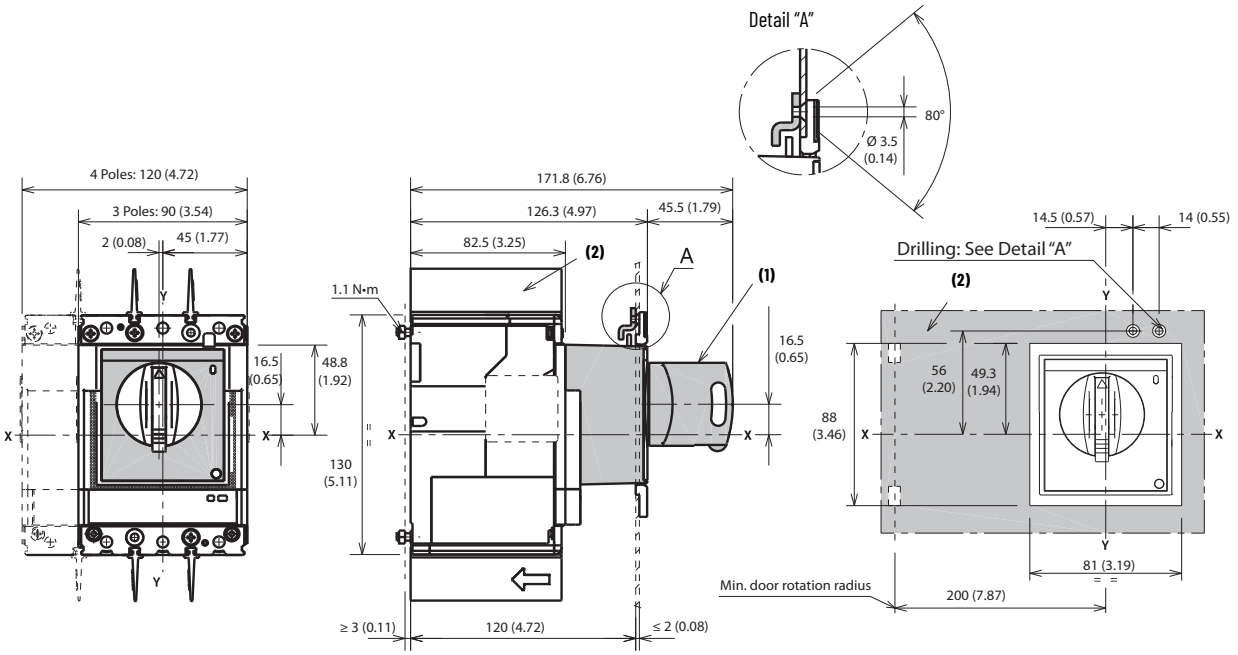

Note	Information
1	Rotary handle operating mechanism on molded case circuit breaker
2	Required 25 mm (0.98 in.) insulating phase barriers are provided

Figure 186 - Escutcheon Mount Drill Template.

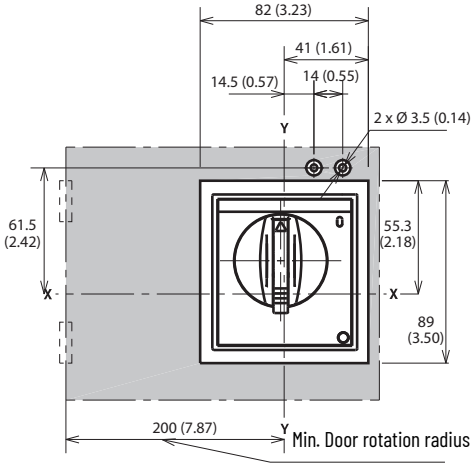

Figure 187 - 140G-H-RVM... Minimum/Maximum Enclosure Depth (for J-Frame Molded Case Circuit Breakers)

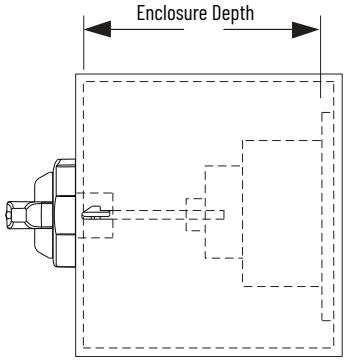

Description	Minimum	Maximum
12 in. Shaft	8 in. (205 mm)	18.25 in. (464 mm)
21 in. Shaft		27.25 in. (692 mm)
12 in. Shaft w/NFPA	9.25 in. (235 mm)	18.25 in. (464 mm)
21 in. Shaft w/NFPA		27.25 in. (692 mm)

This figure depicts the minimum and maximum enclosure sizes that accommodate the MCCB, operator, and handle. See Figure 188 for overall assembly dimensions and handle cutout.

Dimension tolerances ± 0.1 mm (0.004 in)

Figure 188 - Cat. No. 140G-H-RVM... Variable Depth Rotary Handle Operating Mechanism (For J-Frame Molded Case Circuit Breaker)

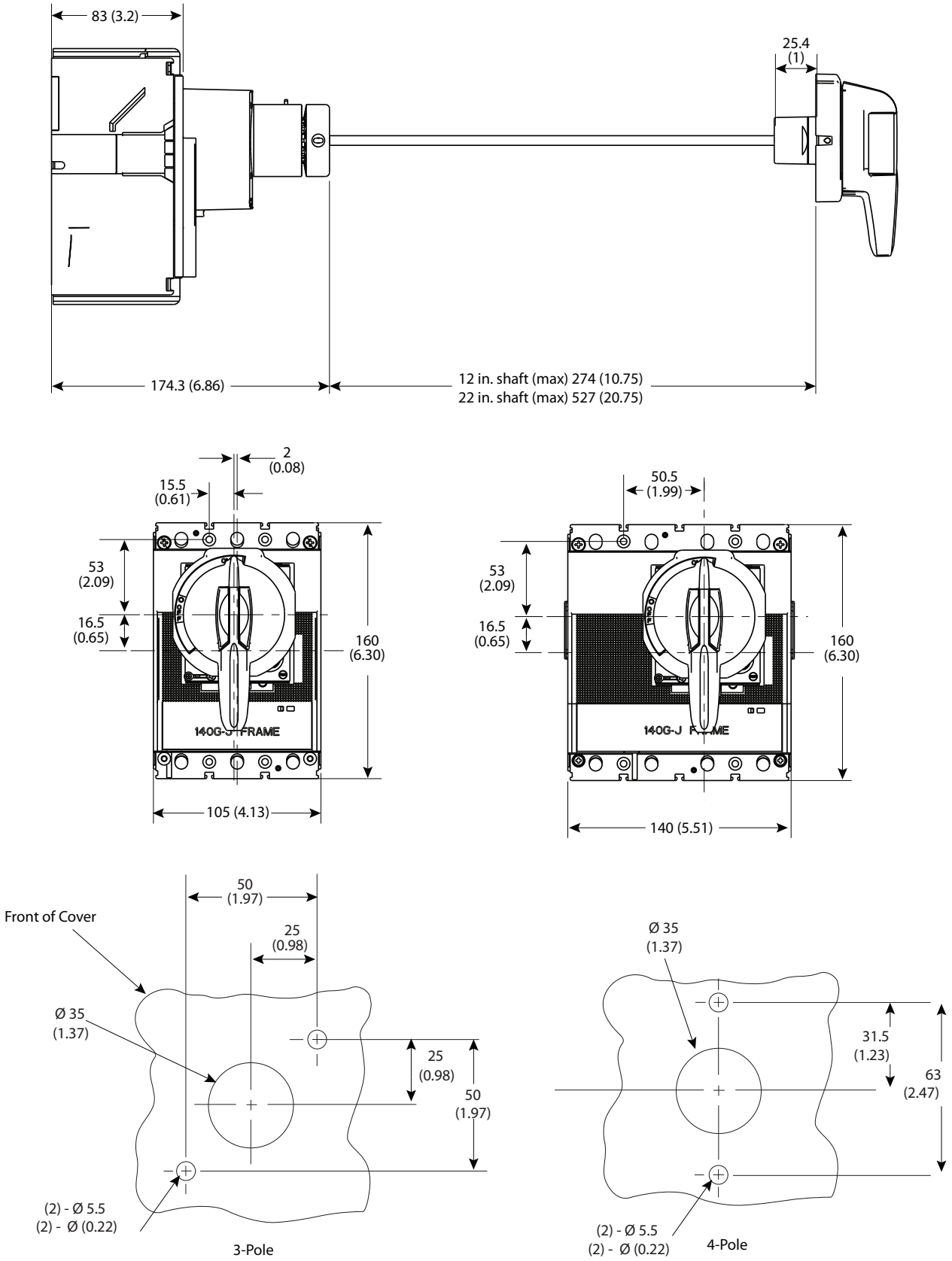

Dimension tolerances ± 0.1 mm (0.004 in)

Figure 189 - Cat. No. 140G-H-EOP... Motor Operator– for H- and J-Frame Molded Case Circuit Breaker

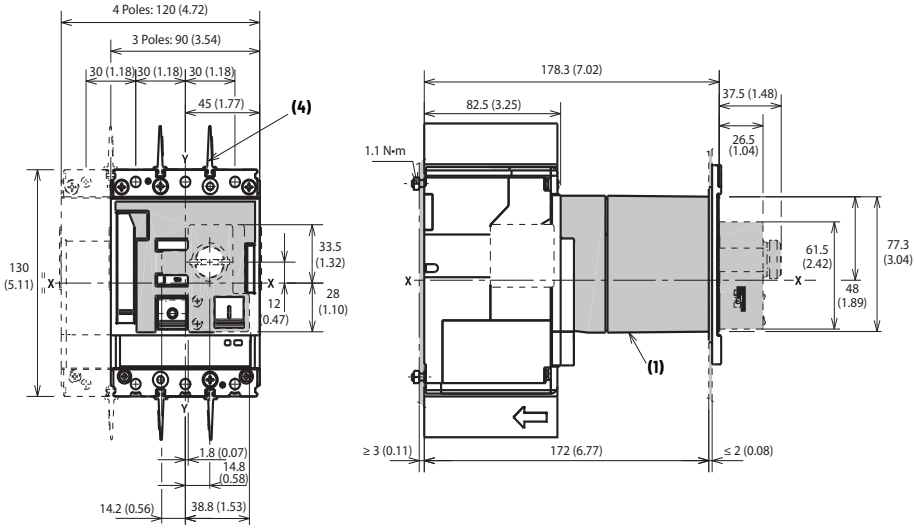

Note	Information
1	Motor operator
2	Drilling template for 3-pole molded case circuit breaker on mounting plate
3	Drilling template for 4-pole molded case circuit breaker on mounting plate
4	Required 25 mm (0.98 in.) insulating phase barriers are provided

Figure 190 - Door Drilling Template

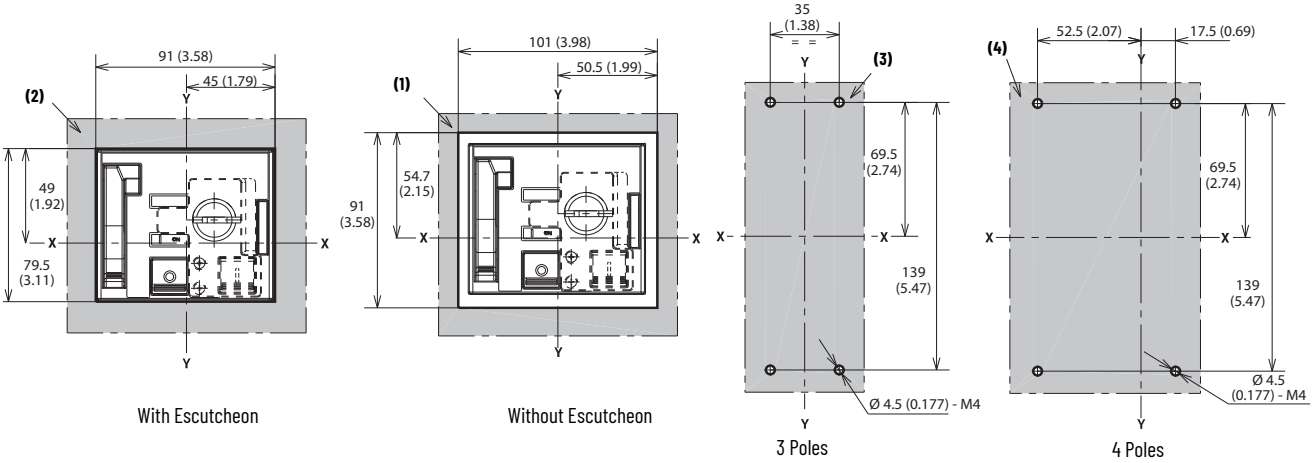

Note	Information
1	Door drilling template (with escutcheon)
2	Door drilling template (without escutcheon)
3	Drilling template for 3-pole molded case circuit breaker on mounting plate
4	Drilling template for 4-pole molded case circuit breaker on mounting plate

Dimension tolerances ± 0.1 mm (0.004 in)

Figure 191 - Cat. No. 140G-J-EP2504 Residual Current Release Module for 4-Pole Molded Case Circuit Breakers

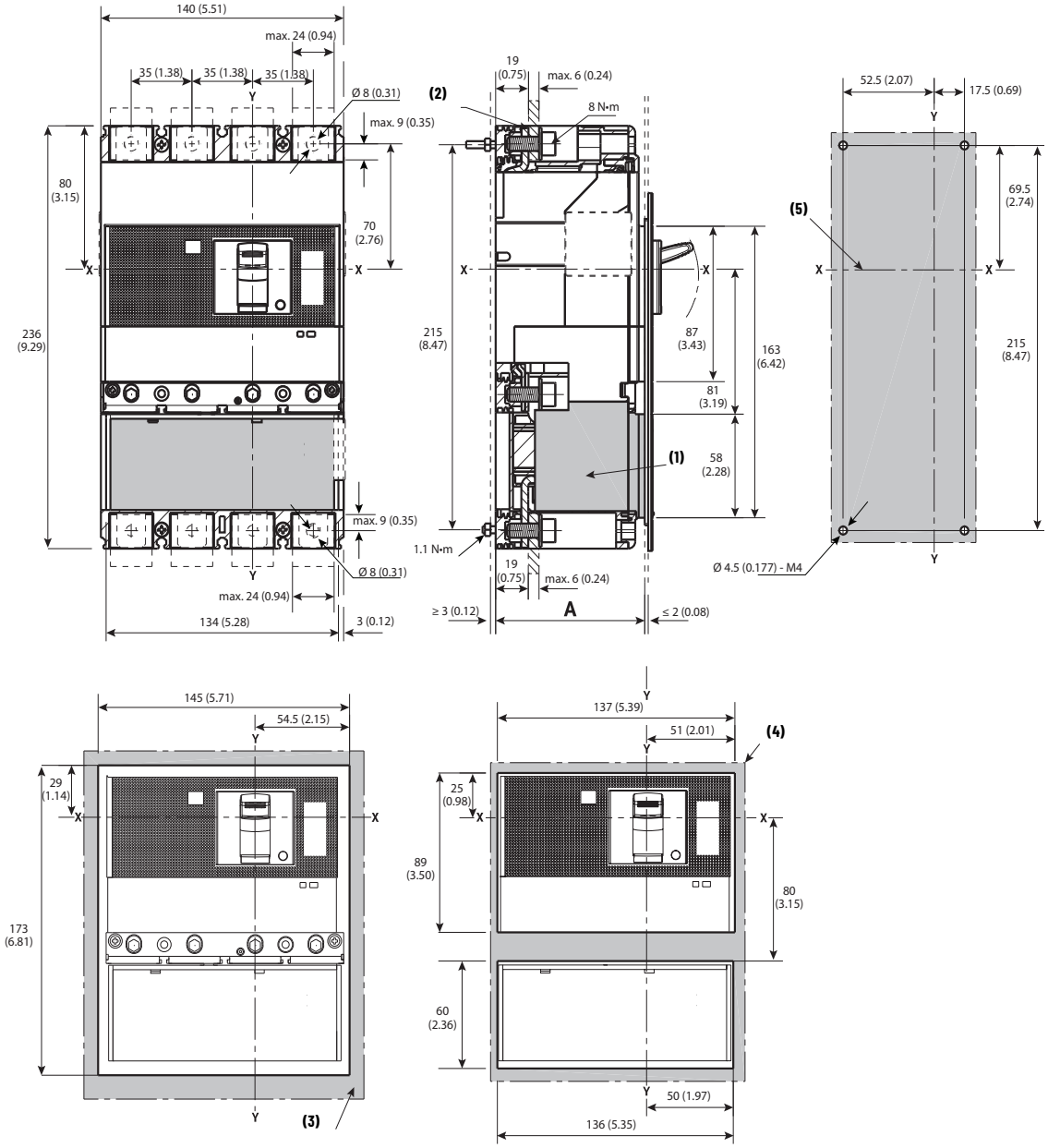

Description	No. of Poles	A
With escutcheon	4	86 (3.39)
Without escutcheon	4	83.5 (3.29)

Note	Information
1	Residual current module
2	End cap terminals for ring or busbar connection
3	Drilling template — door with direct rotary mechanism with escutcheon
4	Drilling template — door with direct rotary mechanism, without escutcheon
5	Drilling template — molded case circuit breaker on mounting plate

Dimension tolerances ± 0.1 mm (0.004 in)

Figure 192 - Metal Bail Flex Cable Operator and Actuator, Cat. No. 140G-J-FCXB...

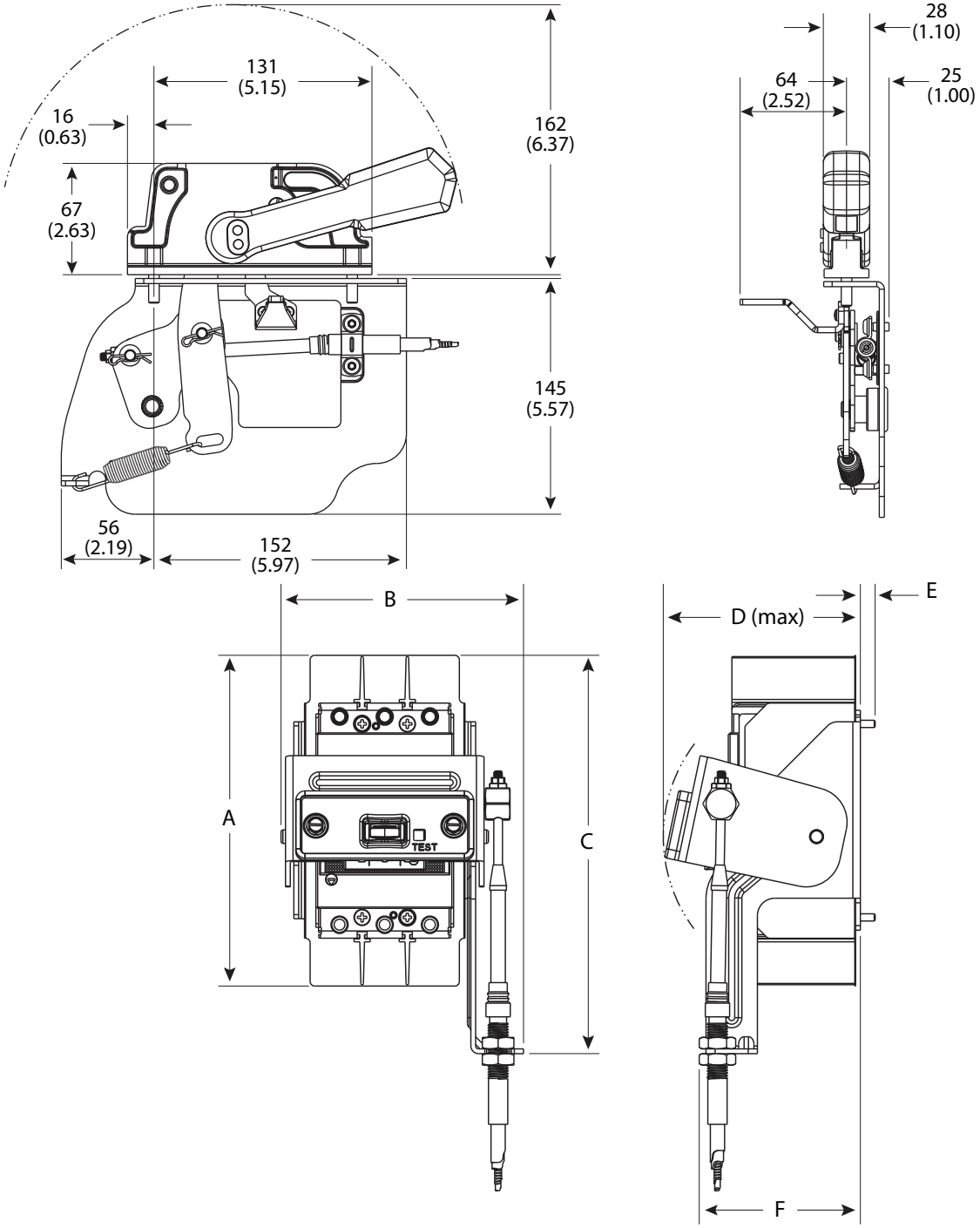

Frame Size	Units	Dimension Designation					
		A	B	C	D	E	F
G	[mm]	183 (7.20)	134 (5.28)	220 (8.67)	109 (4.29)	8 (0.32)	89 (3.51)
H	[mm]	183 (7.20)	145 (5.70)	224 (8.81)	125 (4.90)	8 (0.32)	104 (4.10)
I	[mm]	203 (8.00)	164 (6.44)	235 (9.25)	109 (4.29)	8 (0.32)	88 (3.45)
J	[mm]	212 (8.35)	164 (6.44)	235 (9.25)	125 (4.90)	8 (0.32)	100 (3.95)
K	[mm]	266 (10.50)	197 (7.75)	256 (10.02)	146 (5.75)	11 (0.45)	116 (4.55)

Dimension tolerances ± 0.1 mm (0.004 in)

Figure 193 - Replacement J-Frame Flex Cable Operator and Actuator, Cat. No. 140G-J-FCX...

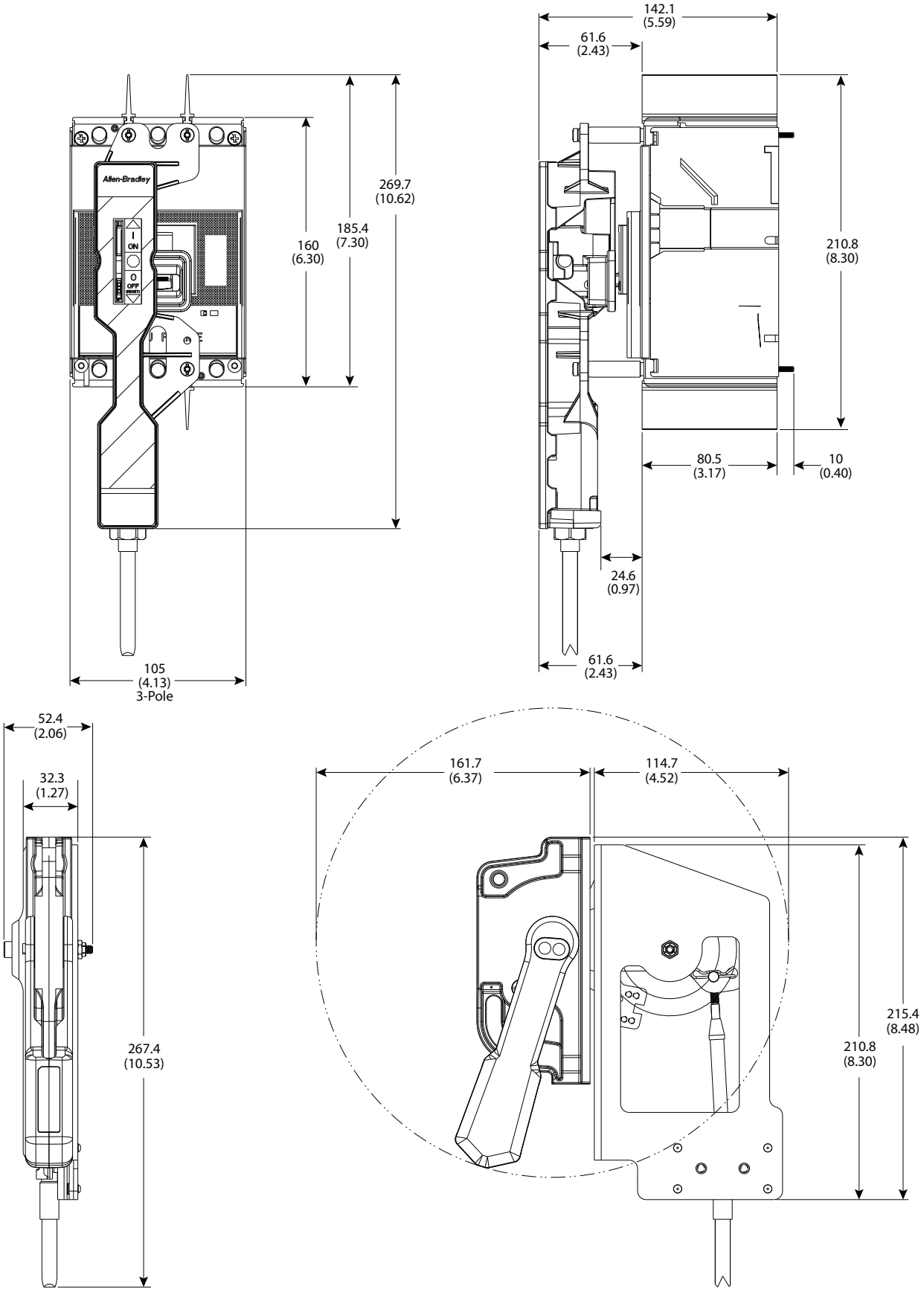

Bulletin 140G/MG K-Frame

Dimensions are in millimeters (inches). Dimensions are not intended to be used for manufacturing purposes.

Dimension tolerances ± 0.1 mm (0.004 in)

Figure 194 - Panel Mounted Molded Case Circuit Breaker

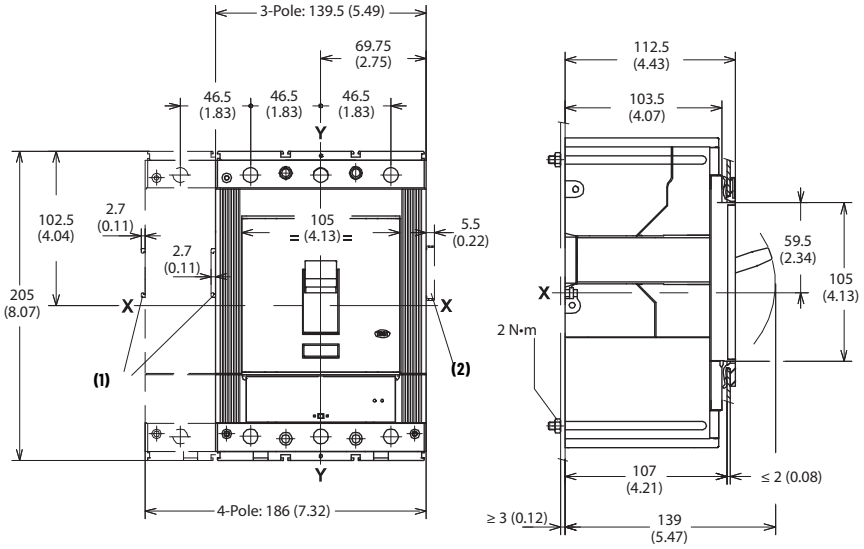

Note	Information
1	Overall dimensions with optional shunt trip or undervoltage relay installed
2	Overall dimensions with optional auxiliary contacts installed

Figure 195 - Drilling Templates for Molded Case Circuit Breaker Mounting

Escutcheon for compartment door

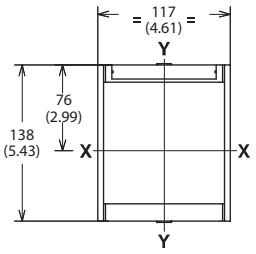

Drilling template for compartment door

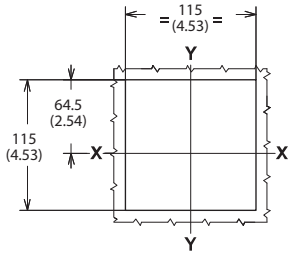

With escutcheon (3...4 poles)

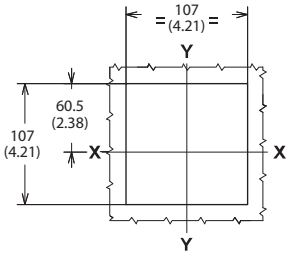

Without escutcheon (3...4 poles)

Drilling template for mounting plate

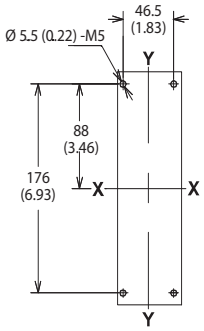

3 poles

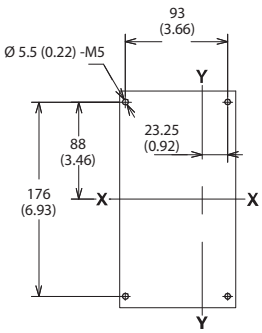

4 poles

Dimension tolerances ± 0.1 mm (0.004 in)

Figure 196 - Cat. Nos. 140G-K-ECM, -ECM4 Terminals

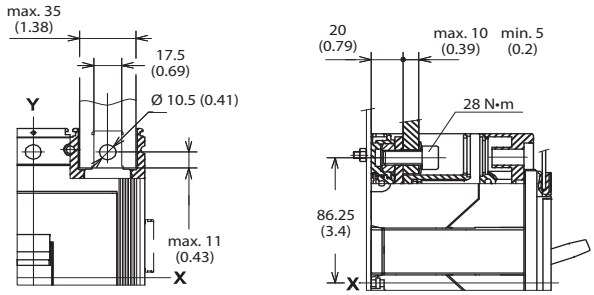

Figure 197 - Cat. Nos. 140G-K-TLC13, -TLC14 Terminals

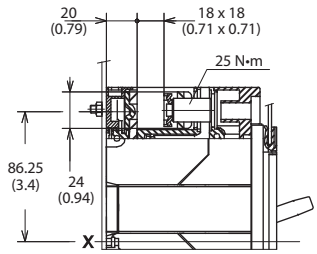

Wires: 250...500 MCM (120...240 mm^2)

Figure 198 - Cat. Nos. 140G-K-TLA23, -TLA24, -TLC23, -TLC24 Terminals

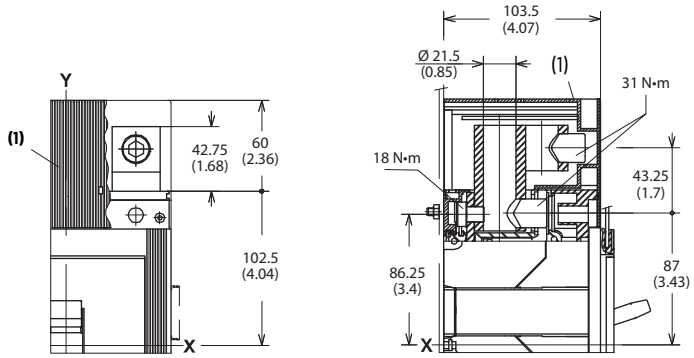

Wires: two 2/0...250 MCM (95...120 mm^2)

Note	Information
1	Terminal covers with IP40 protection

Figure 199 - Cat. Nos. 140G-K-TLA13, -TLA14 Terminals

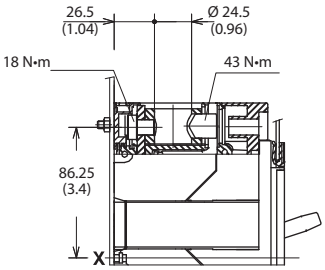

Wires: 250...500 MCM (120...240 mm^2)

Dimension tolerances ± 0.1 mm (0.004 in)

Figure 200 - Cat. Nos. 140G-K-TLA2A3 Terminals

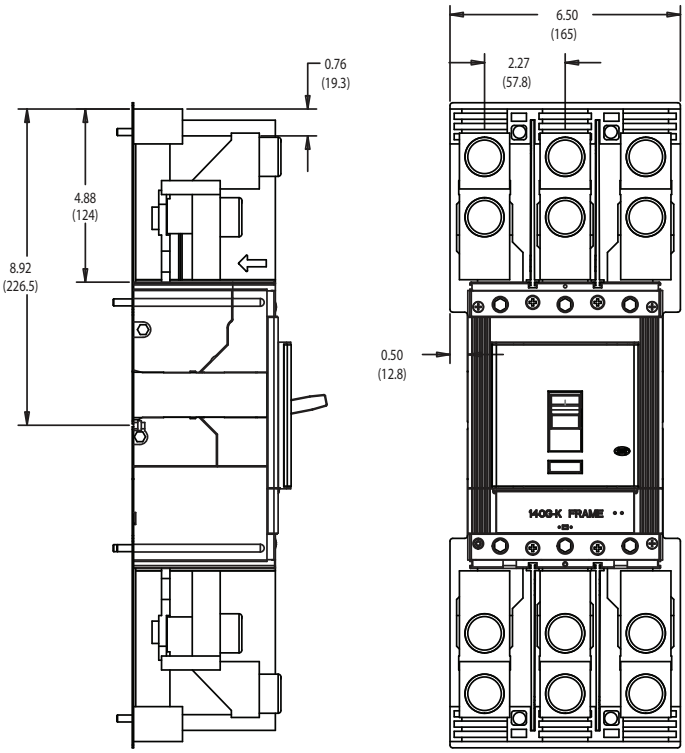

Wires: two 3/0...500 MCM (95...240 mm^2)

Figure 201 - Cat. Nos. 140G-K-EXT3, -EXT4 Extended Terminals

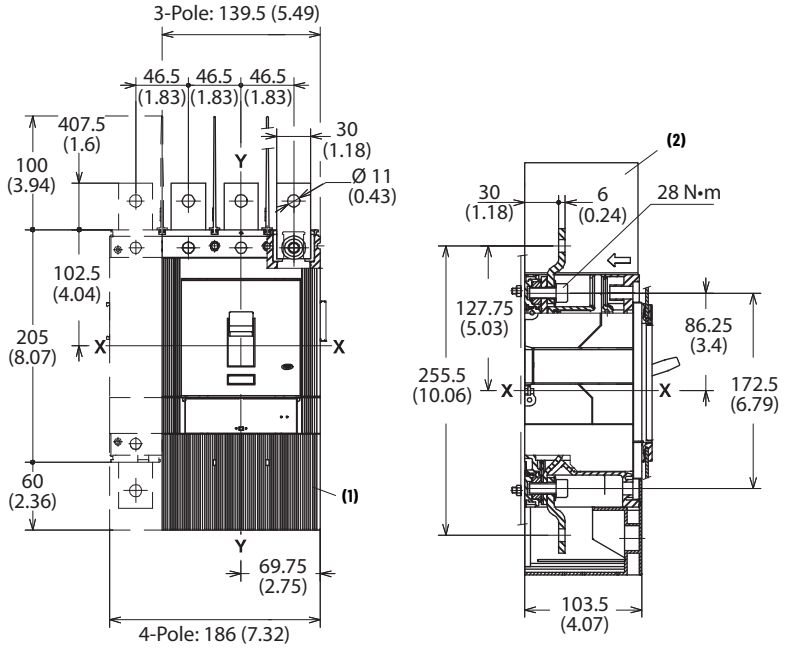

Note	Information
1	Terminal covers with IP40 protection
2	Required 100 mm (3.94 in.) insulating phase barriers are provided

Dimension tolerances ± 0.1 mm (0.004 in)

Figure 202 - Cat. Nos. 140G-K-EXS3, -EXS4 Spreader Terminals

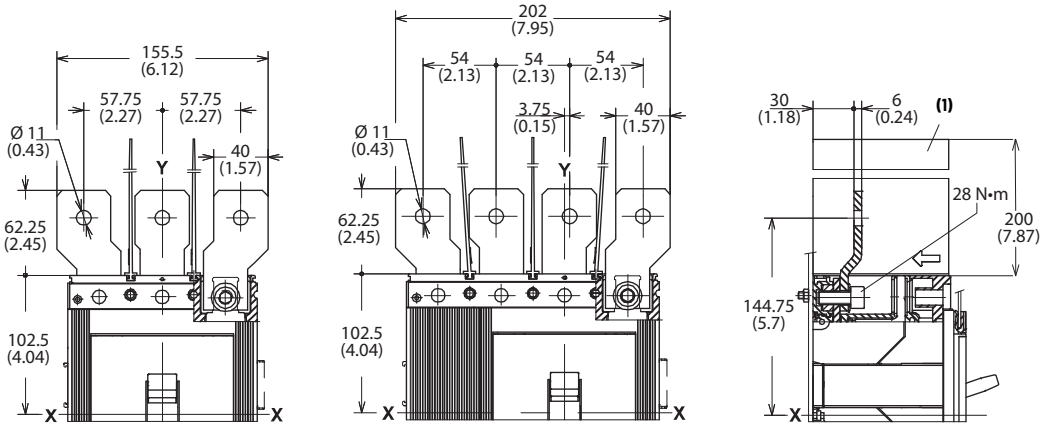

Note	Information
1	Required 200 mm (7.87 in.) insulating phase barriers are provided

Figure 203 - Cat. No. 140G-K-RMB, -RMY Rotary Handle Operating Mechanism — Door Mounted

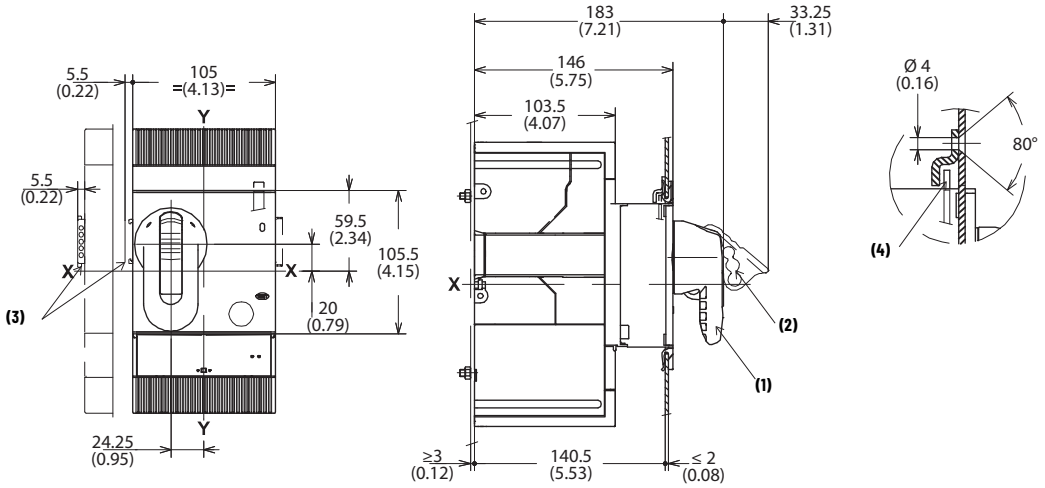

Note	Information
1	Rotary handle operating mechanism on molded case circuit breaker
2	Padlock device for open position (max. 3 padlocks; provided by customer)
3	Dimensions with cabled early make contact
4	Compartment door lock

Figure 204 - 140G-K-RVM... Minimum/Maximum Enclosure Depth

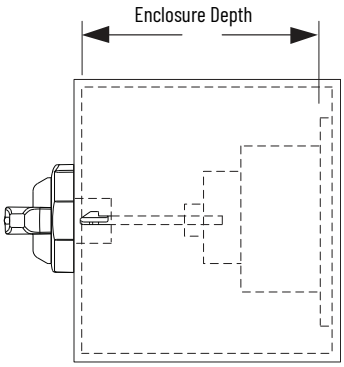

Description	Minimum	Maximum
12 in. Shaft	9 in. (229 mm)	17.75 in. (450 mm)
21 in. Shaft		26.75 in. (679 mm)
12 in. Shaft w/NFPA	11 in. (280 mm)	17.75 in. (450 mm)
21 in. Shaft w/NFPA		26.75 in. (679 mm)

This figure depicts the minimum and maximum enclosure sizes that accommodate the MCCB, operator, and handle. See Figure 205 for overall assembly dimensions and handle cutout.

Dimension tolerances ± 0.1 mm (0.004 in)

Figure 205 - Cat. No. 140G-K-RVM... Variable Depth Rotary Handle Operating Mechanism

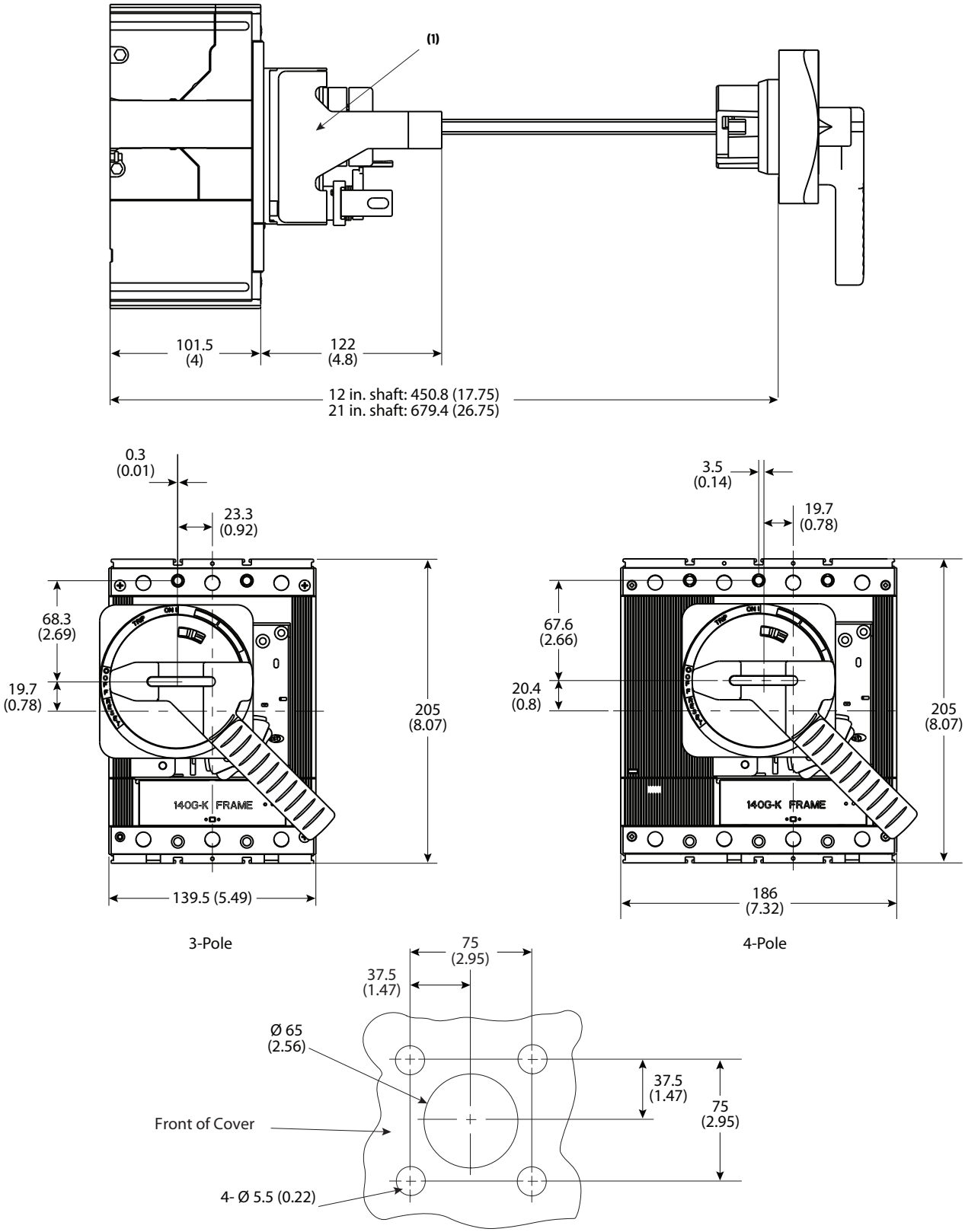

Note	Information
1	Optional support bracket

Dimension tolerances ± 0.1 mm (0.004 in)

Figure 206 - Cat No. 140G-K-EOP... Motor Operator

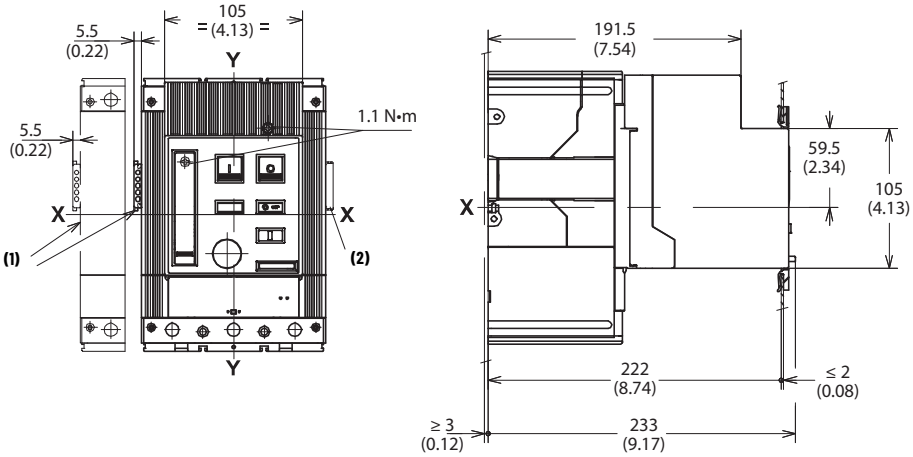

Note	Information
1	Additional width with optional shunt trip or UV relay installed
2	Additional width with optional auxiliary contacts installed

Figure 207 - Cat. No. 140G-K-ELP Residual Current Release Module for 4-Pole Molded Case Circuit Breakers

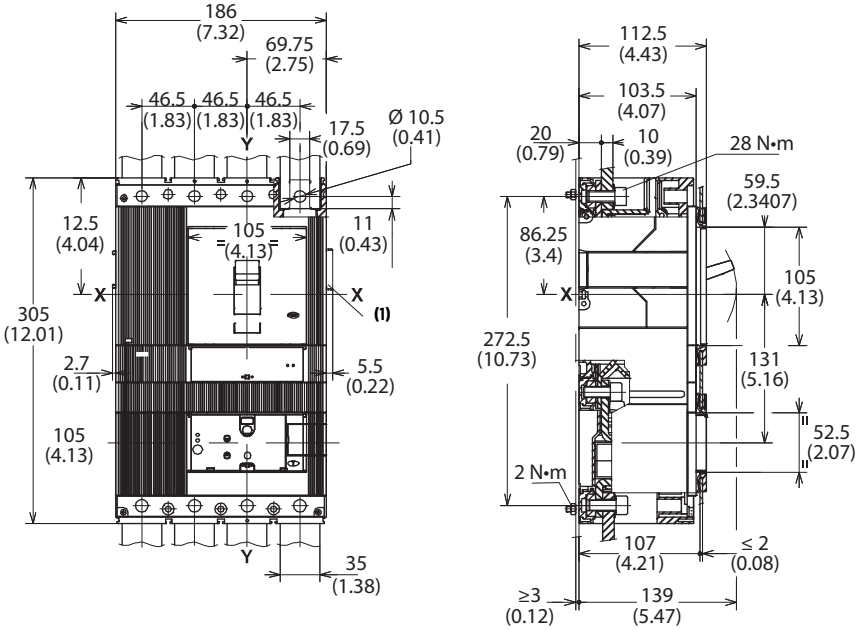

Note	Information
1	Overall dimensions with cabled auxiliary contacts mounted

Dimension tolerances ± 0.1 mm (0.004 in)

Figure 208 - Metal Bail Flex Cable Operator and Actuator, Cat. No. 140G-K-FCXB...

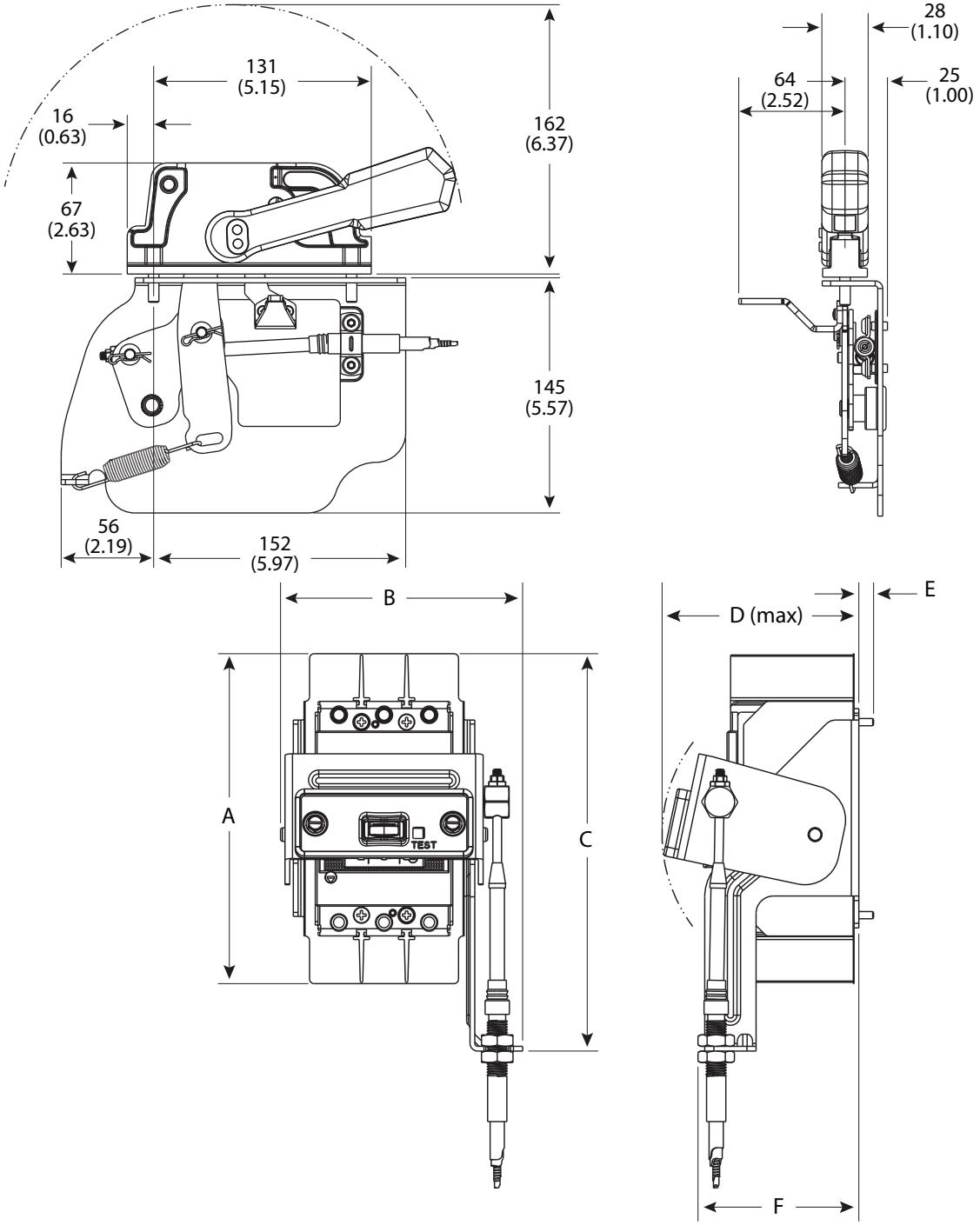

Frame Size	Units	Dimension Designation					
		A	B	C	D	E	F
G	[mm]	183 (7.20)	134 (5.28)	220 (8.67)	109 (4.29)	8 (0.32)	89 (3.51)
H	[mm]	183 (7.20)	145 (5.70)	224 (8.81)	125 (4.90)	8 (0.32)	104 (4.10)
I	[mm]	203 (8.00)	164 (6.44)	235 (9.25)	109 (4.29)	8 (0.32)	88 (3.45)
J	[mm]	212 (8.35)	164 (6.44)	235 (9.25)	125 (4.90)	8 (0.32)	100 (3.95)
K	[mm]	266 (10.50)	197 (7.75)	256 (10.02)	146 (5.75)	11 (0.45)	116 (4.55)

Dimension tolerances ± 0.1 mm (0.004 in)

Figure 209 - Replacement K-Frame Flex Cable Operator and Actuator, Cat. No. 140G-K-FCX...

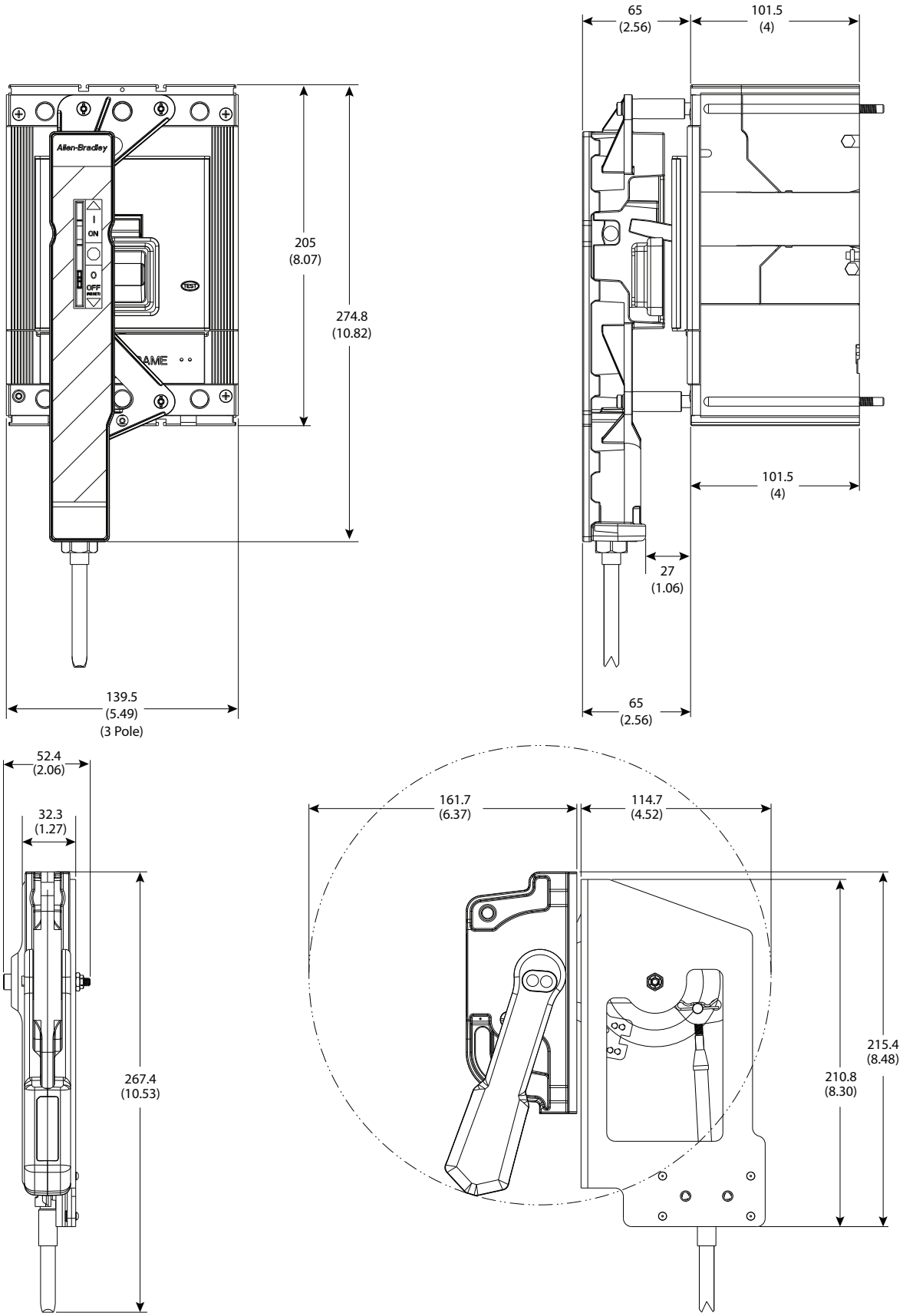

Bulletin 140G/MG M-Frame

Dimensions are in millimeters (inches). Dimensions are not intended to be used for manufacturing purposes.

Dimension tolerances ± 0.1 mm (0.004 in)

Figure 210 - Panel Mounted Molded Case Circuit Breaker

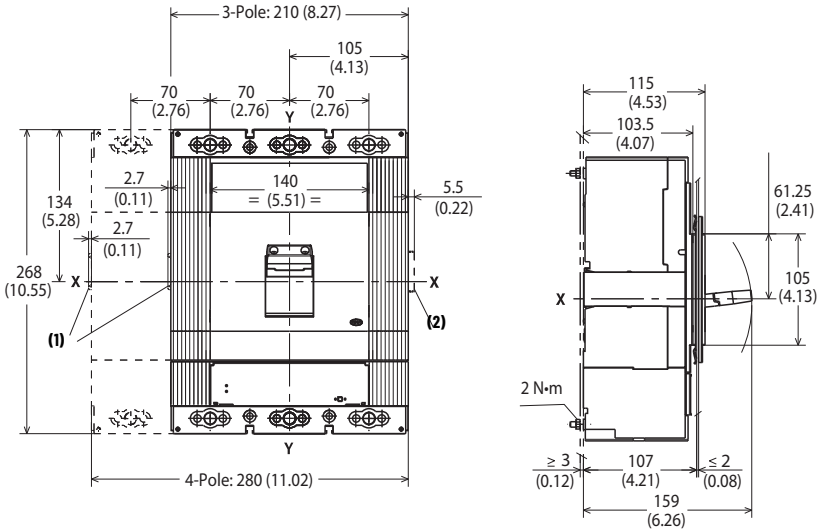

Note	Information
1	Overall dimensions with optional shunt trip or UV relay installed
2	Overall dimensions with optional auxiliary contacts installed

Figure 211 - Drilling Templates for Molded Case Circuit Breaker Mounting

Escutcheon for compartment door

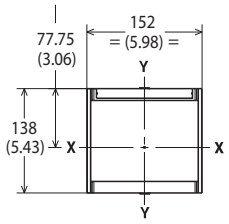

Drilling template for compartment door

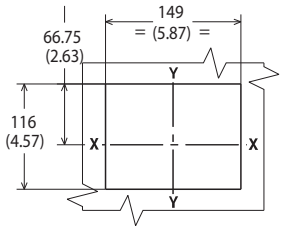

with escutcheon

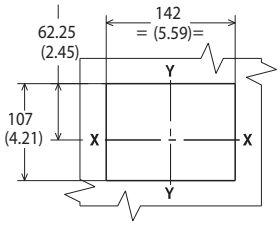

without escutcheon

Drilling template for mounting plate

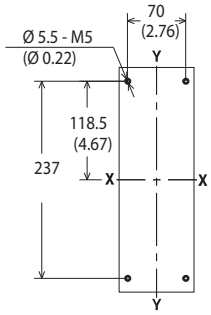

3 Poles

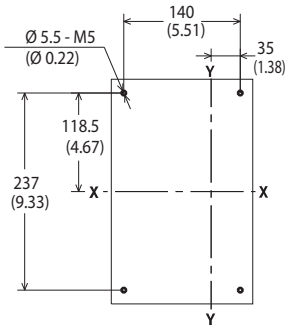

4 Poles

Dimension tolerances ± 0.1 mm (0.004 in)

Figure 212 - Cat. No. 140G-M-ECM Terminals

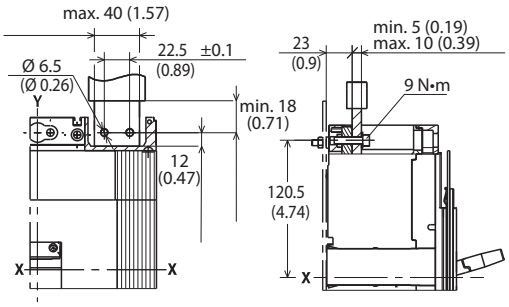

Figure 213 - Cat. No. 140G-M-TLA23, -TLA24, -TLC23, -TLC24 Terminals

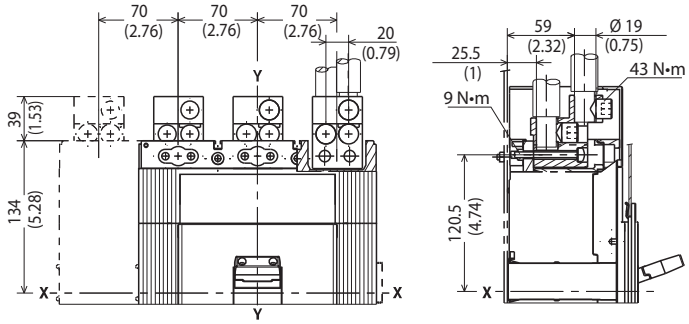

Figure 214 - Cat. Nos. 140G-M-EXT3, -EXT4 Extended Terminals

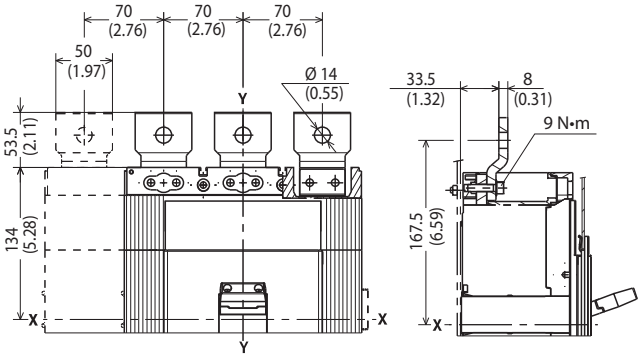

Figure 215 - Cat. Nos. 140G-M-EXSLI3, -EXSLO3, -EXS4 Spreader Terminals

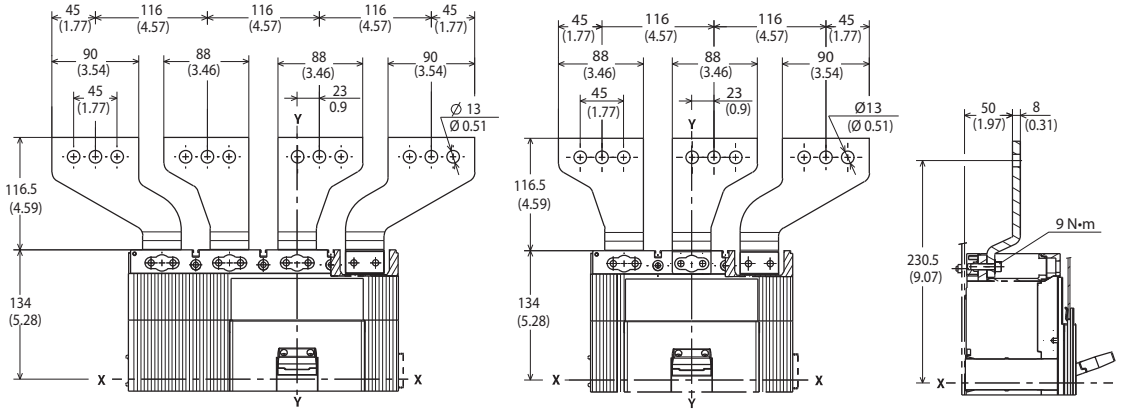

Dimension tolerances ± 0.1 mm (0.004 in)

Figure 216 - Cat. No. 140G-M-RMB, -RMY Rotary Handle Operating Mechanism — Door Mounted

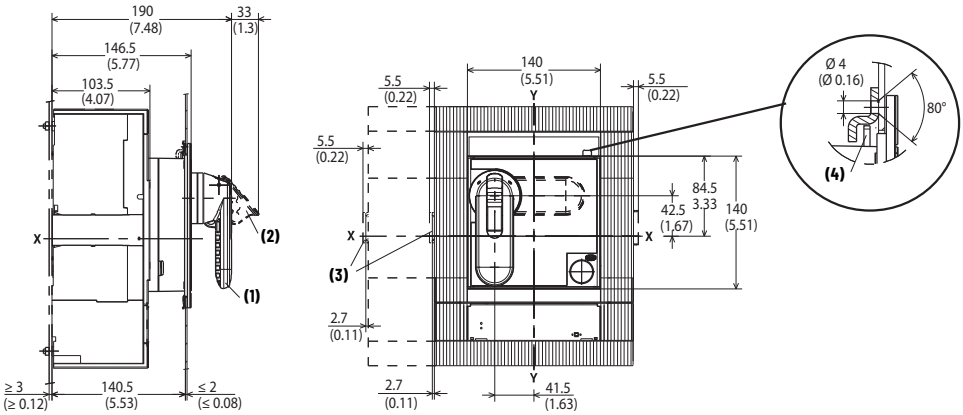

Note	Information
1	Rotary handle operating mechanism on molded case circuit breaker
2	Padlock device for open position (max. 3 padlocks; provided by customer)
3	Dimension with cabled early make contact
4	Compartment door lock

Figure 217 - Drilling Templates for Molded Case Circuit Breaker Mounting

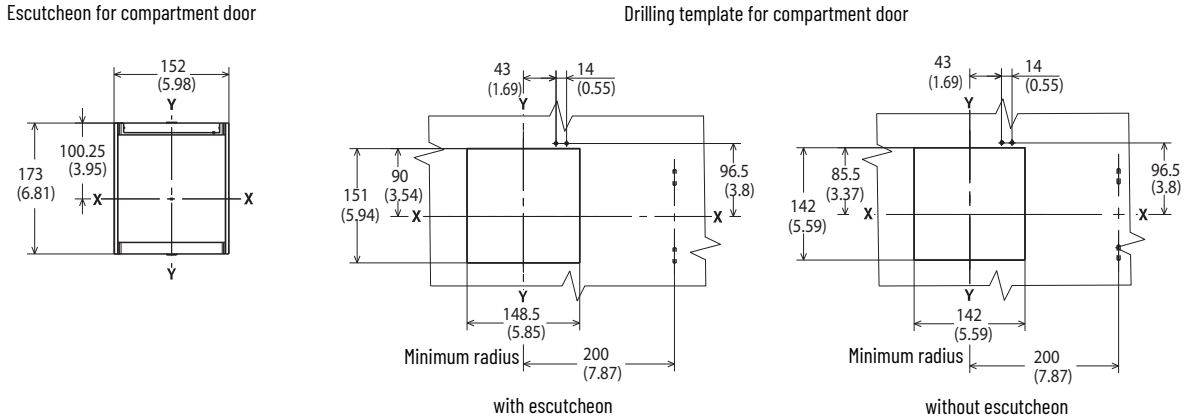

Figure 218 - 140G-K-RVM... Minimum/Maximum Enclosure Depth (for M-Frame Molded Case Circuit Breakers)

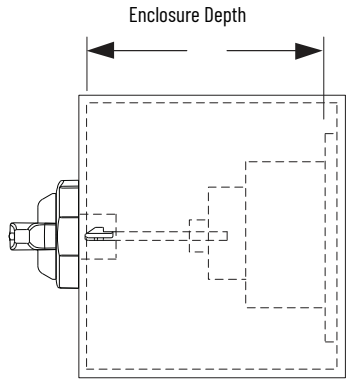

Description	Minimum	Maximum
12 in. Shaft	9 in. (229 mm)	17.75 in. (450 mm)
21 in. Shaft		26.75 in. (679 mm)
12 in. Shaft w/NFPA	11 in. (280 mm)	17.75 in. (450 mm)
22 in. Shaft w/NFPA		26.75 in. (679 mm)

This figure depicts the minimum and maximum enclosure sizes that accommodate the MCCB, operator, and handle. See Figure 205 for overall dimensions and handle cutout.

Dimension tolerances ± 0.1 mm (0.004 in)

Figure 219 - Cat. No. 140G-M-RVM... Variable Depth Rotary Handle Operating Mechanism

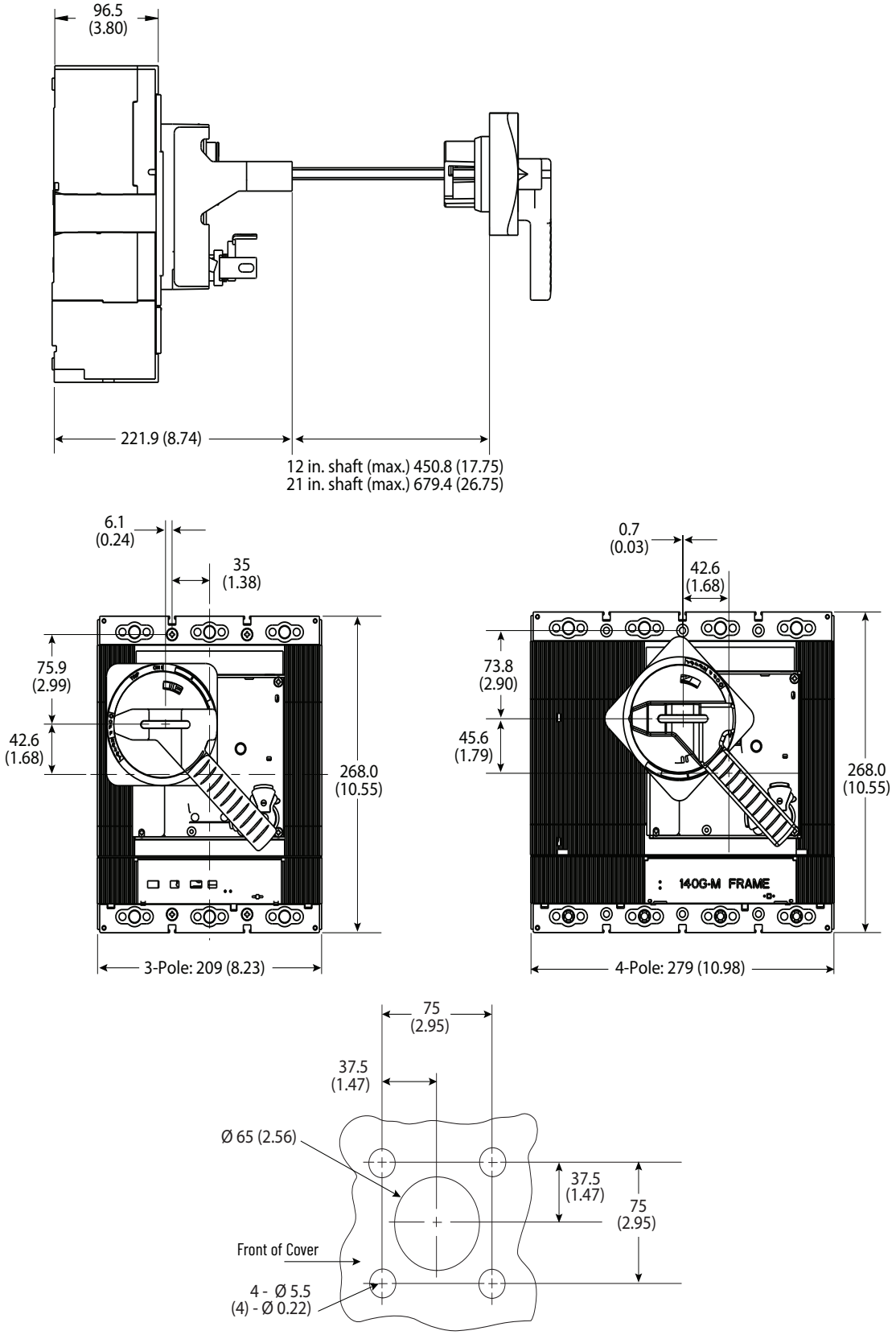

Dimension tolerances ± 0.1 mm (0.004 in)

Figure 220 - Cat. No. 140G-M-EOP, -ECOP Motor Operator

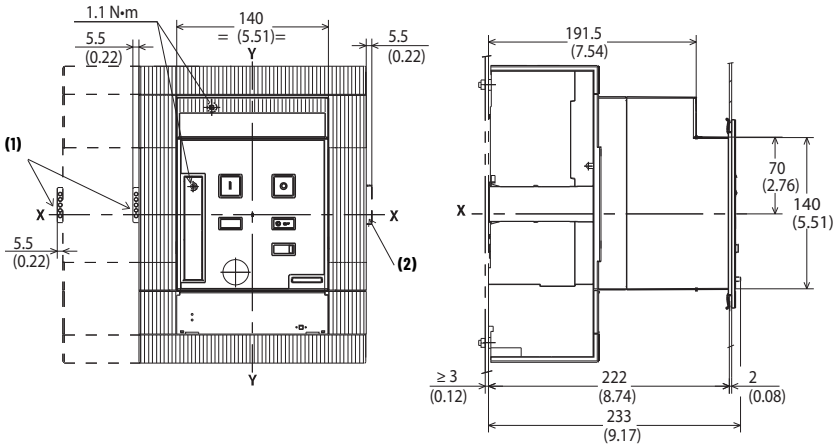

Note	Information
1	Overall dimension with optional shunt trip or undervoltage relay installed
2	Overall dimension with optional auxiliary contacts installed

Figure 221 - Drilling Templates for Molded Case Circuit Breaker Mounting

Escutcheon for compartment door

Drilling template for compartment door

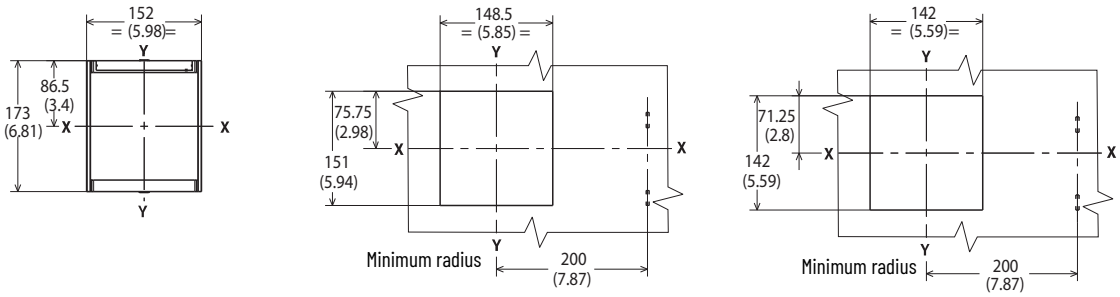

with escutcheon

without escutcheon

Dimension tolerances ± 0.1 mm (0.004 in)

Figure 222 - M-Frame Flex Cable Operator and Actuator, Right Hand

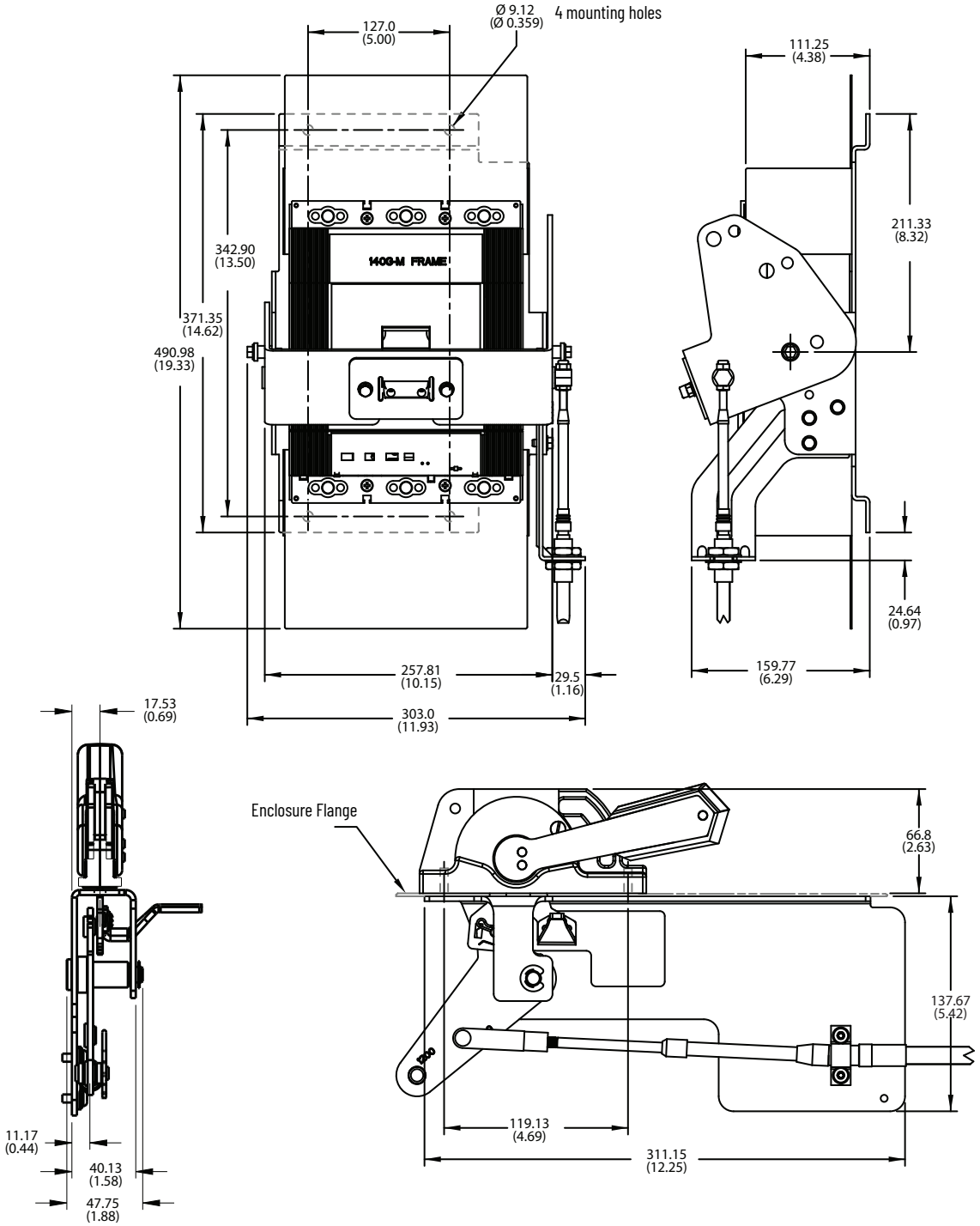

Dimension tolerances ± 0.1 mm (0.004 in)

Figure 223 - M-Frame Flex Cable Operator and Actuator, Left Hand (requires 140G-BML, sold separately)

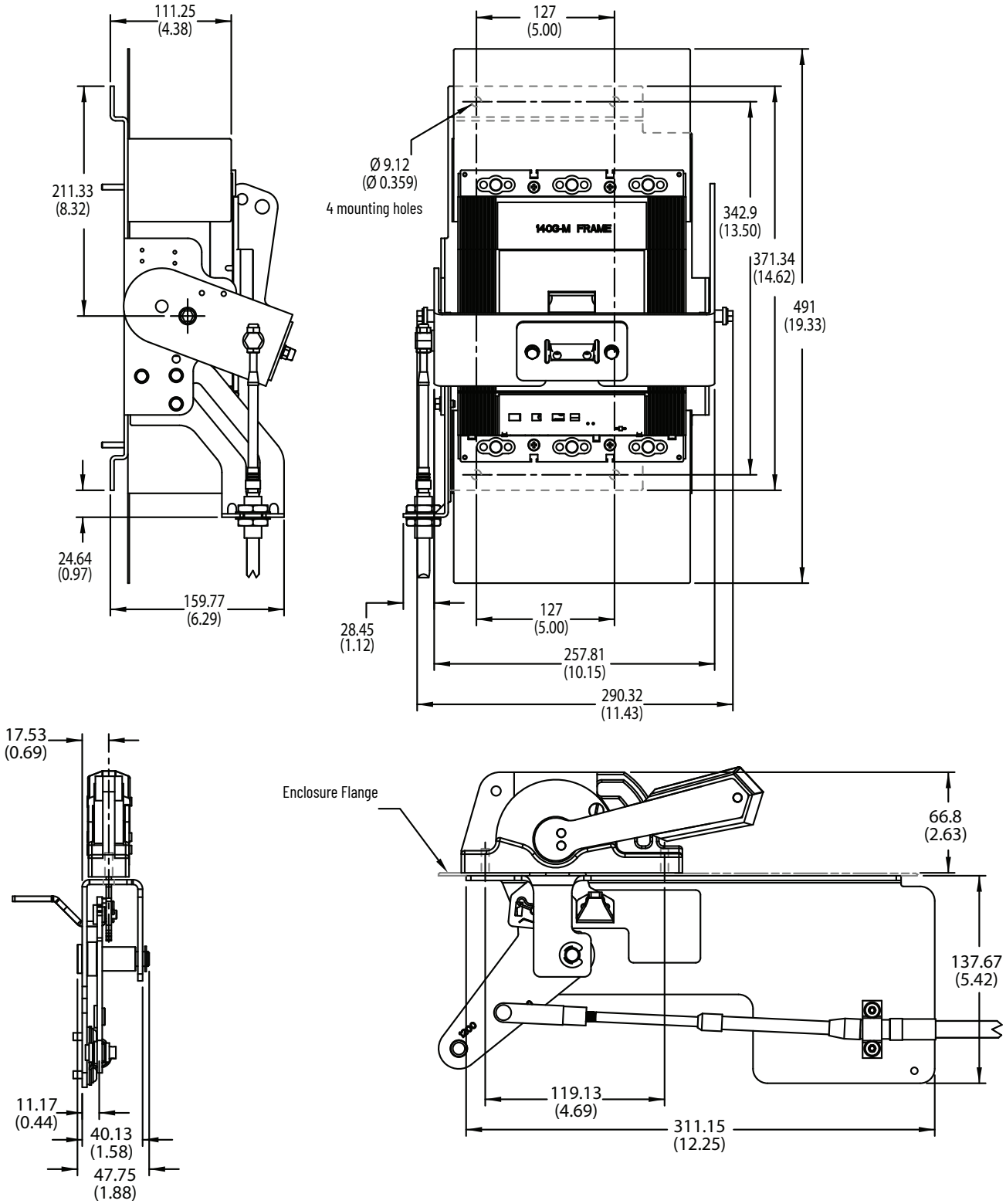

Bulletin 140G/MG N-Frame

Dimensions are in millimeters (inches). Dimensions are not intended to be used for manufacturing purposes.

Dimension tolerances ± 0.1 mm (0.004 in)

Figure 224 - Panel Mounted Molded Case Circuit Breaker

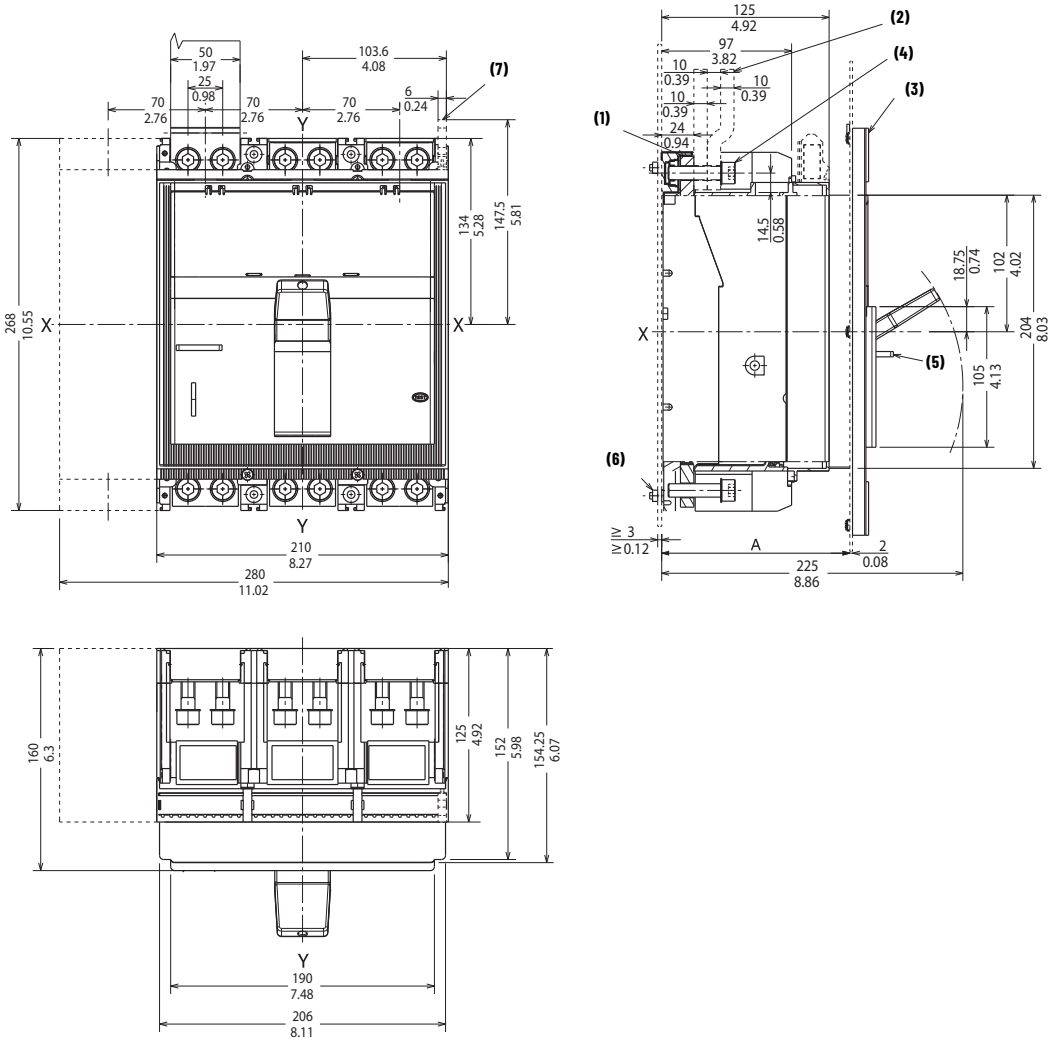

Description	A
With escutcheon	125...141
Without escutcheon	147

Note	Information
1	End cap terminals for ring or busbar connection
2	Extended or Spread Terminals
3	Door escutcheon
4	Tightening torque: 18 N•m
5	Padlock (optional)
6	Tightening torque: 2.5 N•m
7	Terminal for customer wiring connection

Dimension tolerances ± 0.1 mm (0.004 in)

Figure 225 - Drilling Templates for Molded Case Circuit Breaker Mounting

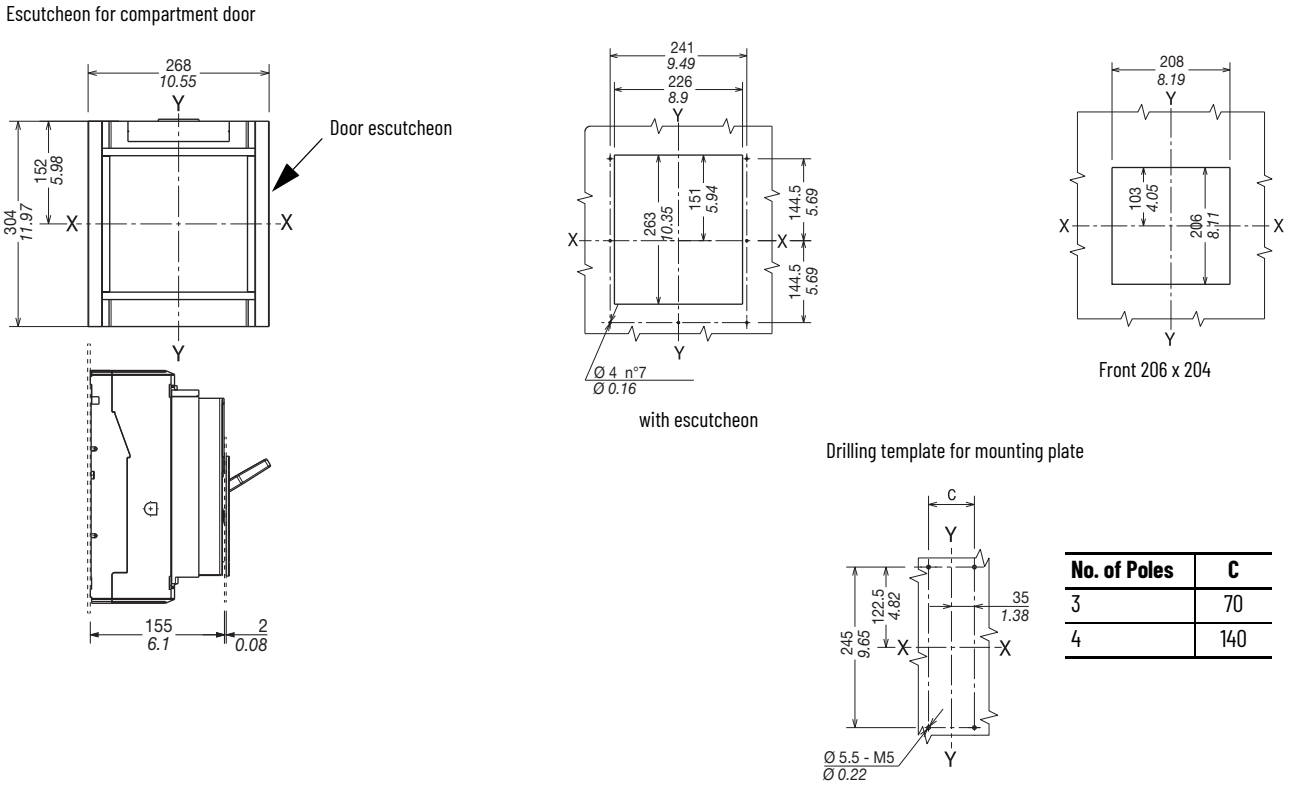

No. of Poles	C
3	70
4	140

Figure 226 - 140G-N-RVM... Minimum/Maximum Enclosure Depth

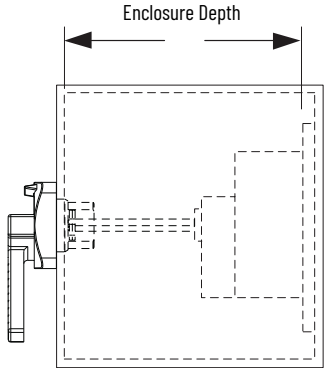

Description	Minimum	Maximum
12 in. Shaft	7.75 in. (196 mm)	17.75 in. (450 mm)
21 in. Shaft		26.75 in. (679 mm)

This figure depicts the minimum and maximum enclosure sizes that accommodate the MCCB, operator, and handle. See Figure 227 for operator dimensions.

Dimension tolerances ± 0.1 mm (0.004 in)

Figure 227 - Cat. No. 140G-N-RVM... Variable Depth Rotary Handle Operating Mechanism

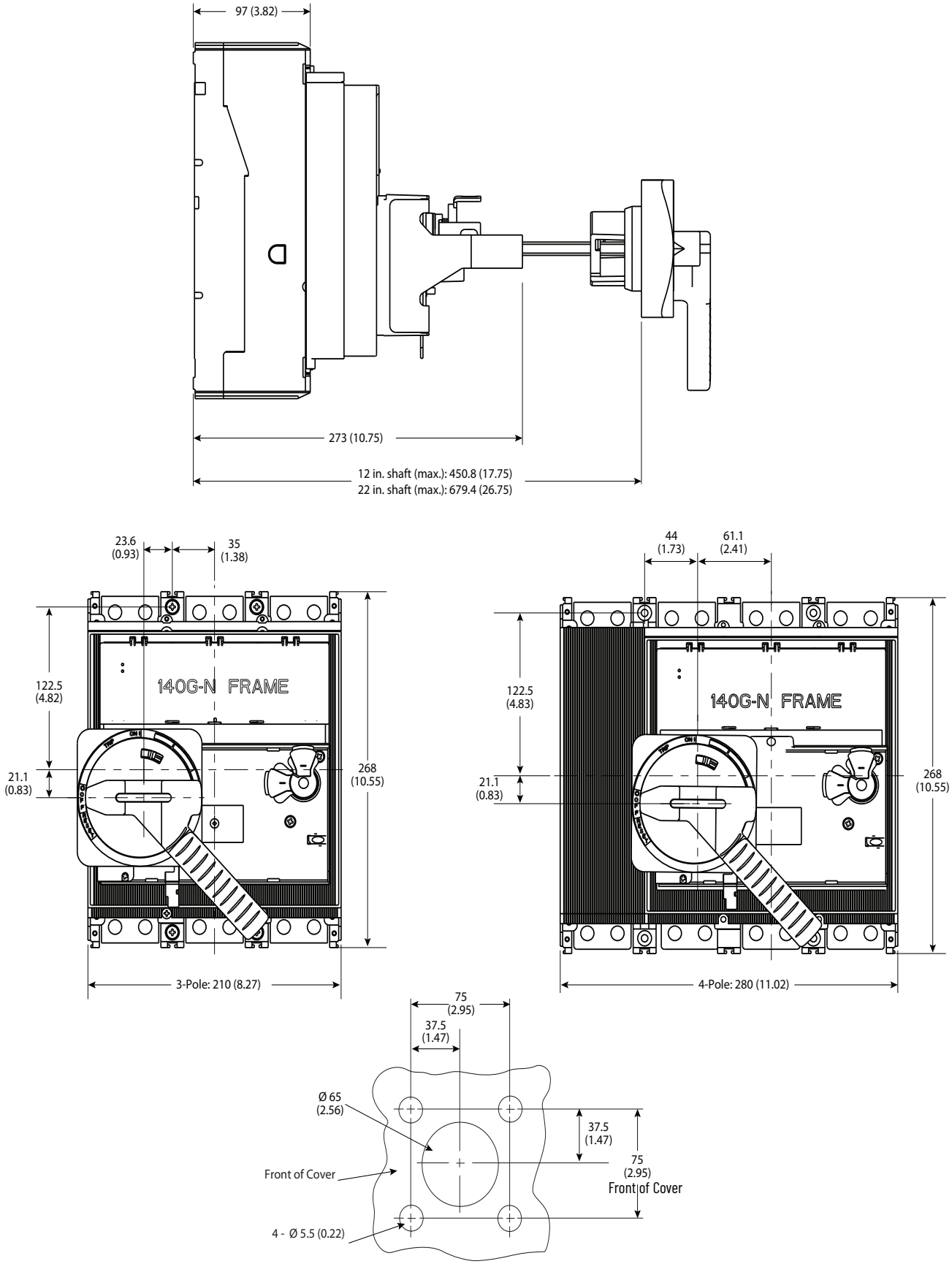

Dimension tolerances ± 0.1 mm (0.004 in)

Figure 228 - Cat. Nos. 140G-N-TLH3, -TLV3, TLH4, TLV4 Terminals

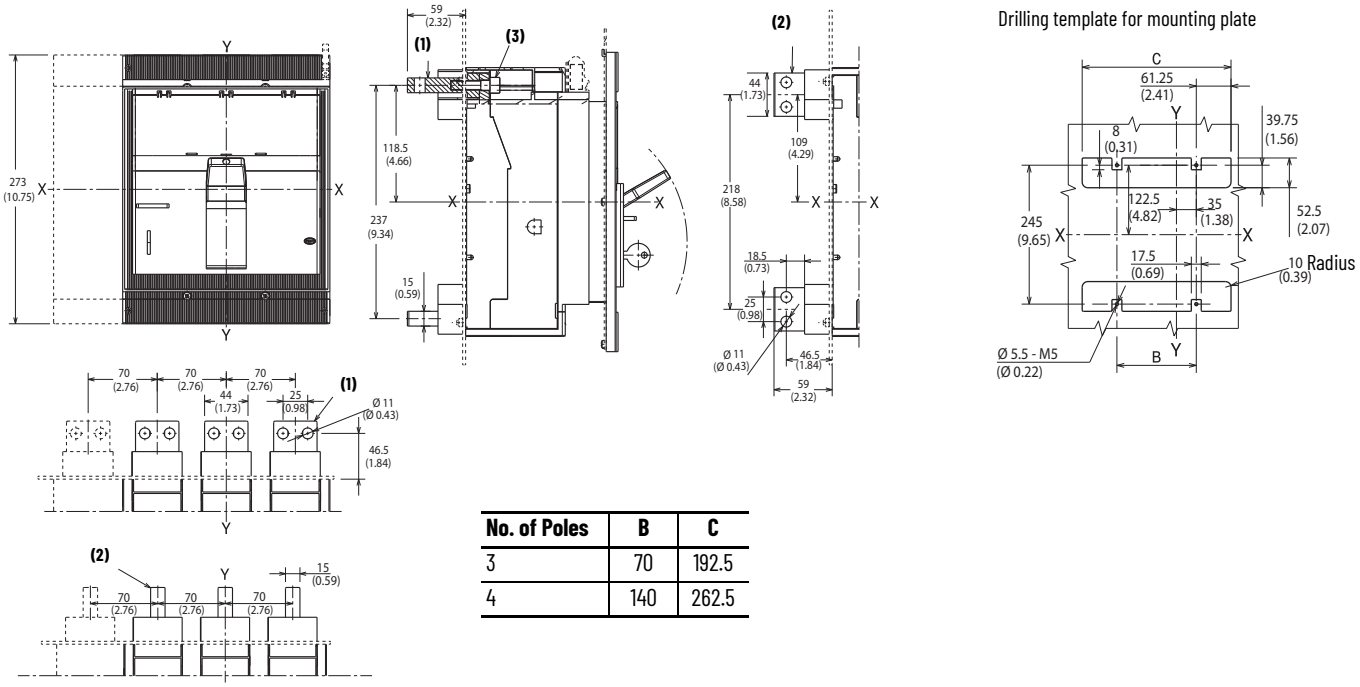

No. of Poles	B	C
3	70	192.5
4	140	262.5

Note	Information
1	Rear horizontal terminals
2	Rear vertical terminals
3	Tightening torque: 20 N•m

Figure 229 - Cat. No. 140G-N-EXT3, -EXT4 Extended Front Terminals

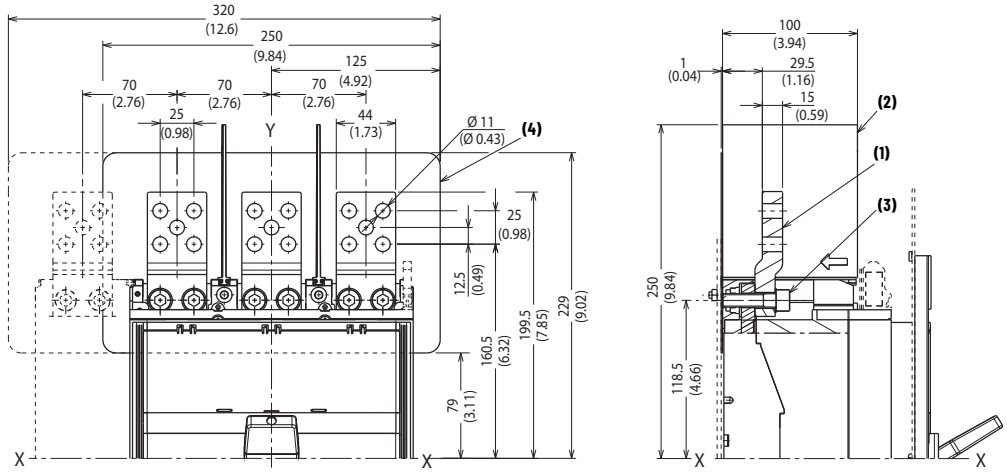

Note	Information
1	Extended terminals
2	Required 100 mm (3.94 in.) insulating phase barriers are provided
3	Tightening torque: 18 N•m
4	Required insulator panel; supplied with extenders

Dimension tolerances ± 0.1 mm (0.004 in)

Figure 230 - Cat. Nos. 140G-N-EXSL13 Top (3-Pole), 140G-N-EXS4 (4-Pole) Rear Spread Terminals (IEC only)

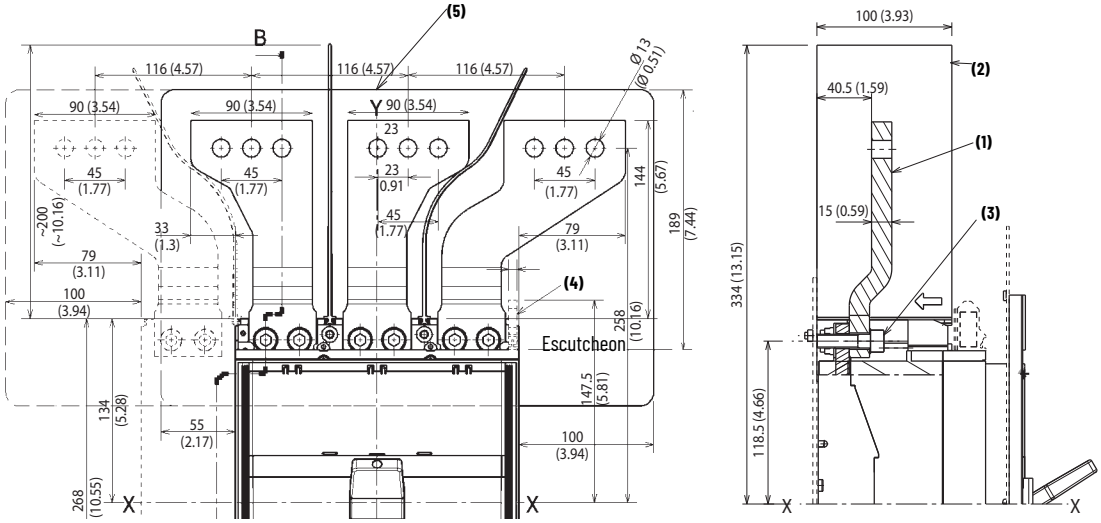

Note	Information
1	Extended spread terminals
2	Required 200 mm (7.87 in.) insulating phase barriers are provided
3	Tightening torque: 18 N•m
4	Terminal for auxiliary contacts
5	Required insulator panel; supplied with extenders

Dimension tolerances ± 0.1 mm (0.004 in)

Figure 231 - Cat. No. 140G-N-RMB, -RMY Rotary Handle Operating Mechanism

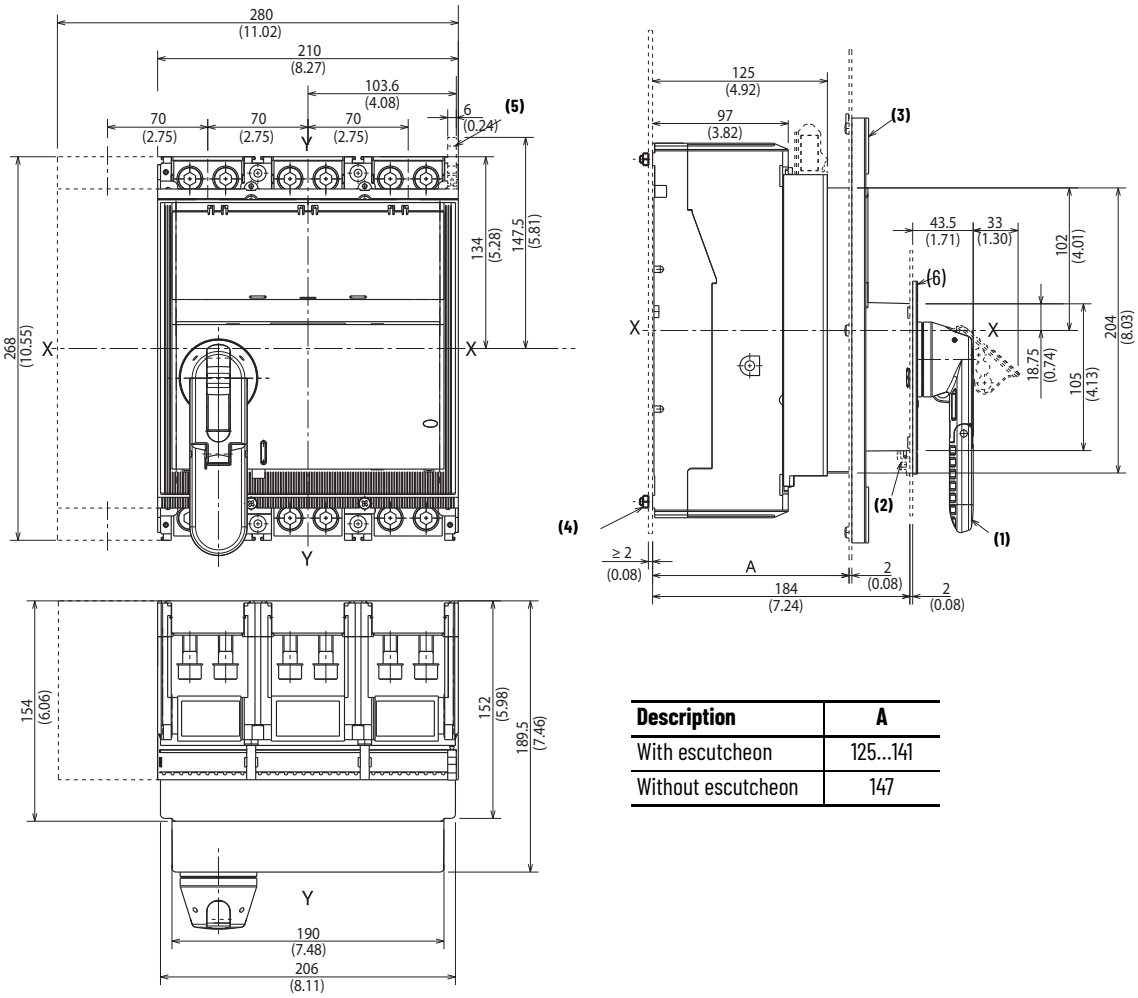

Description	A
With escutcheon	125...141
Without escutcheon	147

Note	Information
1	Rotary handle operating mechanism on molded case circuit breaker
2	Compartment door interlock
3	Door escutcheon
4	Tightening torque: 2.5 N•m
5	Terminal for customer wiring connection
6	Reduced flange of rotary handle for door (optional)

Dimension tolerances ± 0.1 mm (0.004 in)

Figure 232 - Cat. No. 140G-N-TLA43, -TLA44, -TLC43, -TLC44 Terminals

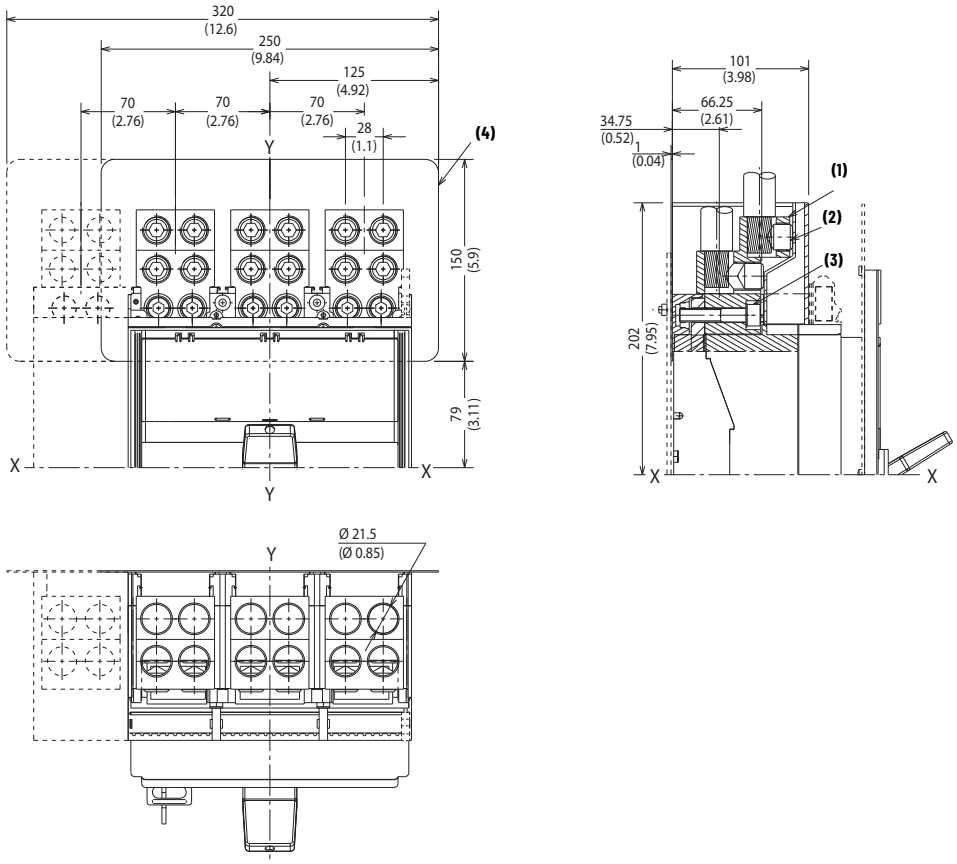

Note	Information
1	Terminals for cable connection
2	Tightening torque: 43 N•m
3	Tightening torque: 18 N•m
4	Required insulator panel; supplied with extenders

Dimension tolerances ± 0.1 mm (0.004 in)

Figure 233 - N-Frame Flex Cable Operator and Actuator, Right Hand

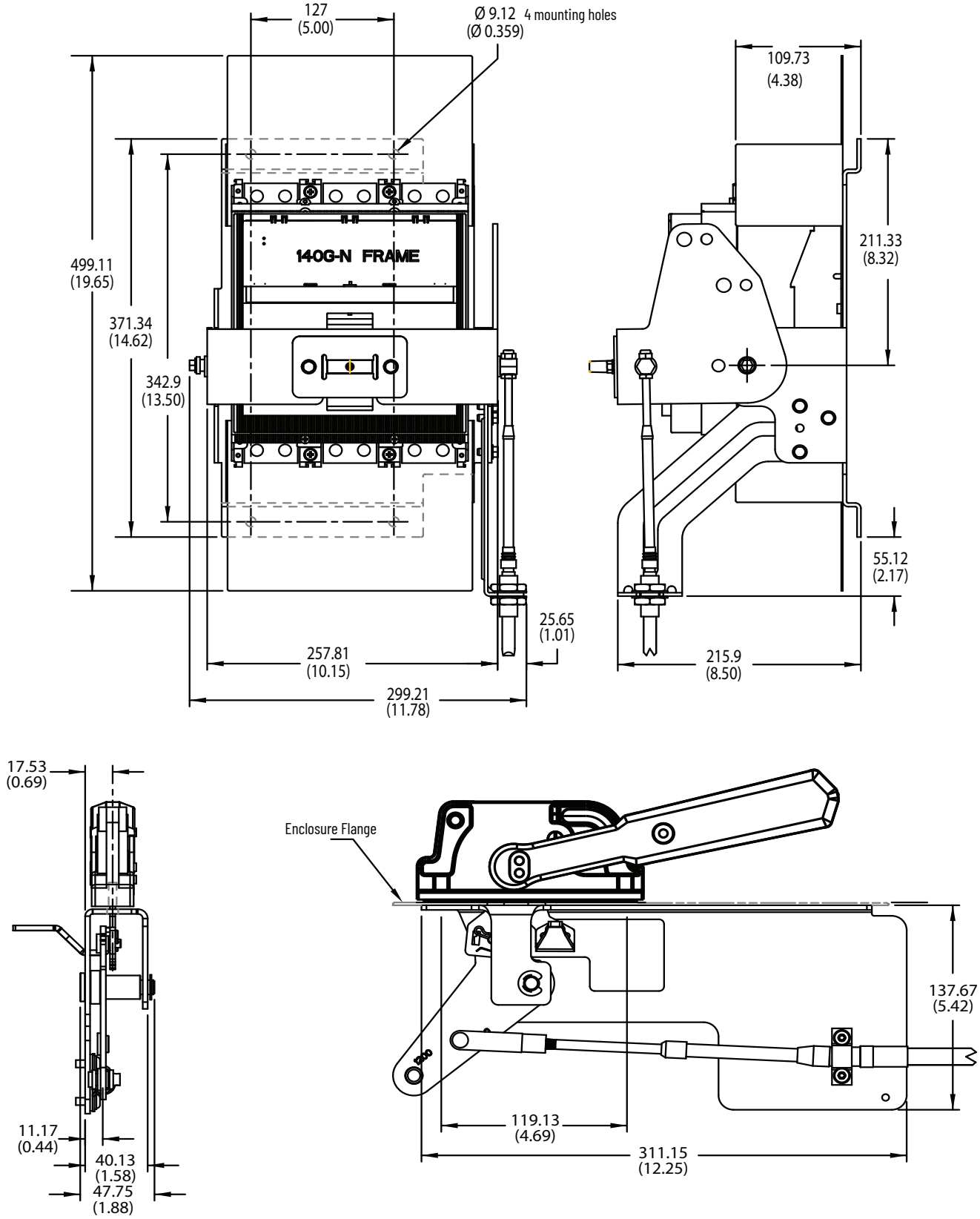

Dimension tolerances ± 0.1 mm (0.004 in)

Figure 234 - N-Frame Flex Cable Operator and Actuator, Left Hand (requires 140G-BML, sold separately)

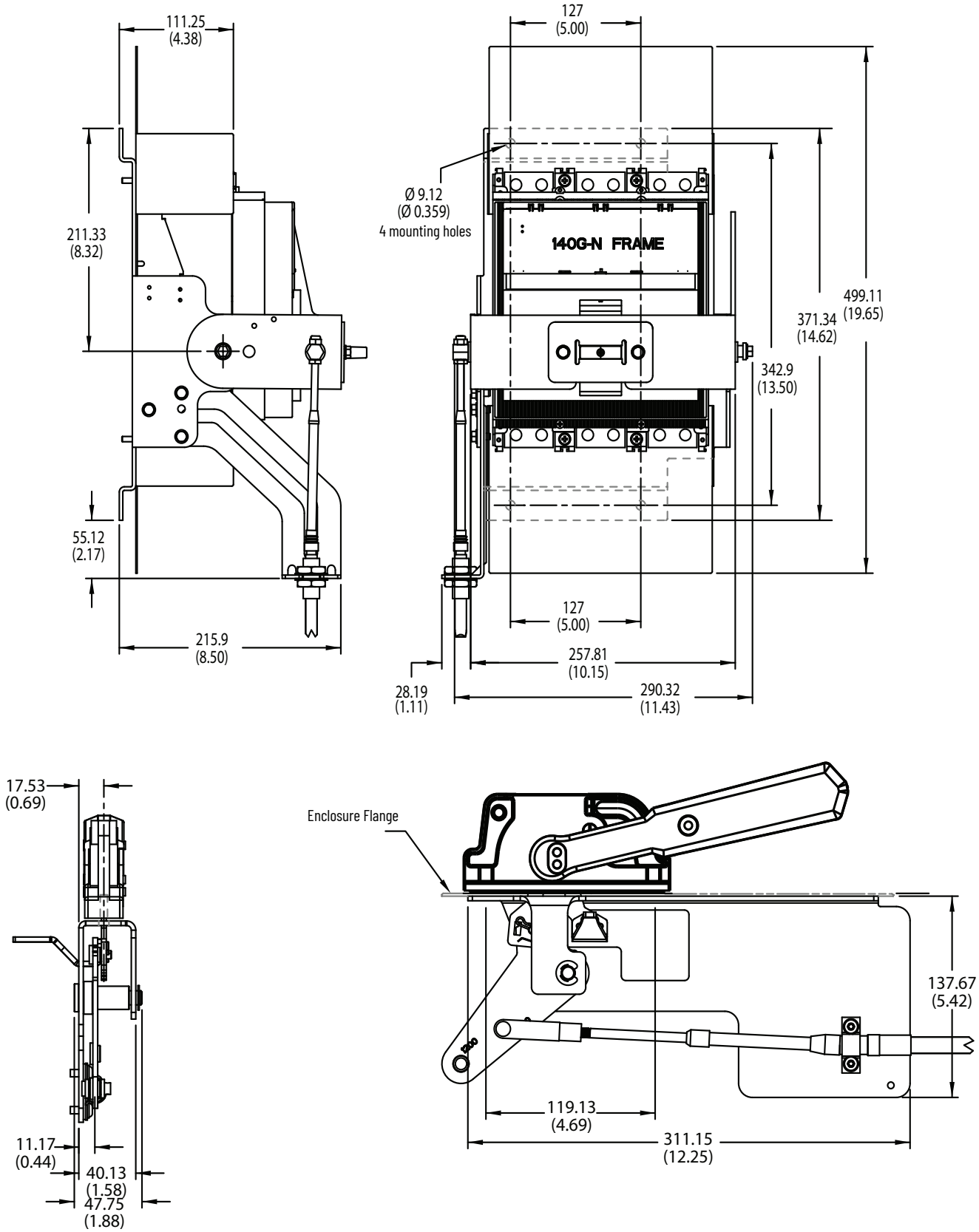

Bulletin 140G NS-Frame

Dimensions are in millimeters (inches). Dimensions are not intended to be used for manufacturing purposes.

Dimension tolerances ± 0.1 mm (0.004 in)

Figure 235 - Panel Mounted Molded Case Circuit Breaker

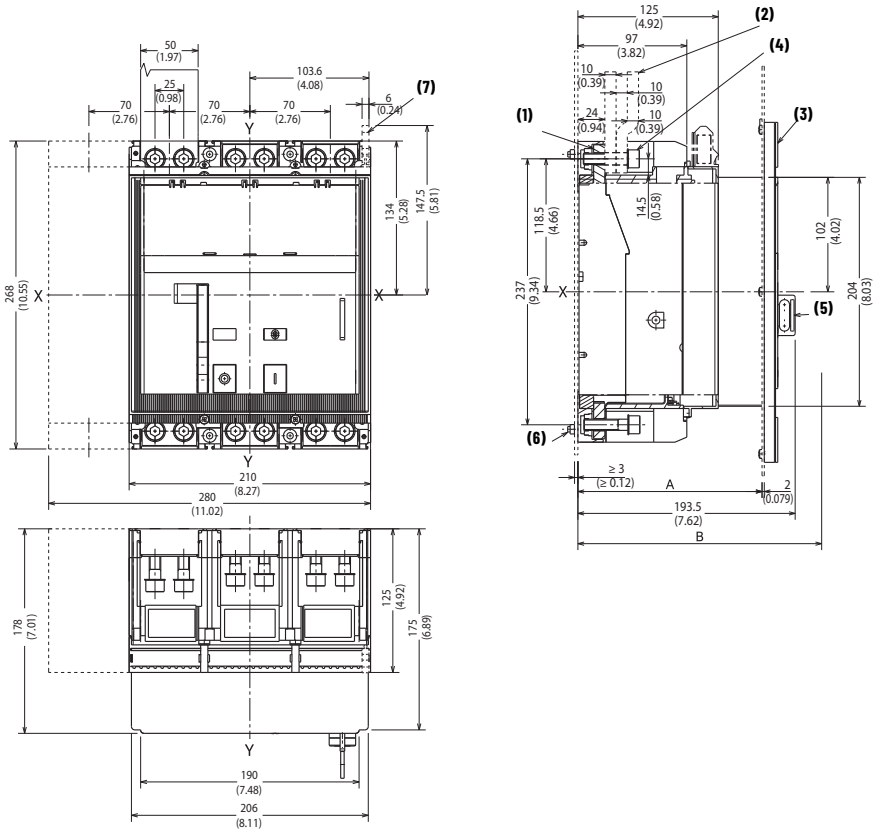

Description	A	B	C
With escutcheon	125...184 (4.92...7.24)	–	–
Without escutcheon	170 (6.7)	–	–
Standard	–	208 (8.19)	–
3-Pole MCCBs	–	–	70 (2.76)
4-Pole MCCBs	–	–	140 (5.51)

Note	Information
1	End Cap terminals for ring or busbar connection
2	Extended or Spread Terminals
3	Door escutcheon
4	Tightening torque: 18 N•m
5	Padlock (optional)
6	Tightening torque: 2.5 N•m
7	Terminals for cable connection

Dimension tolerances ± 0.1 mm (0.004 in)

Figure 236 - Drilling Templates for Molded Case Circuit Breaker Mounting

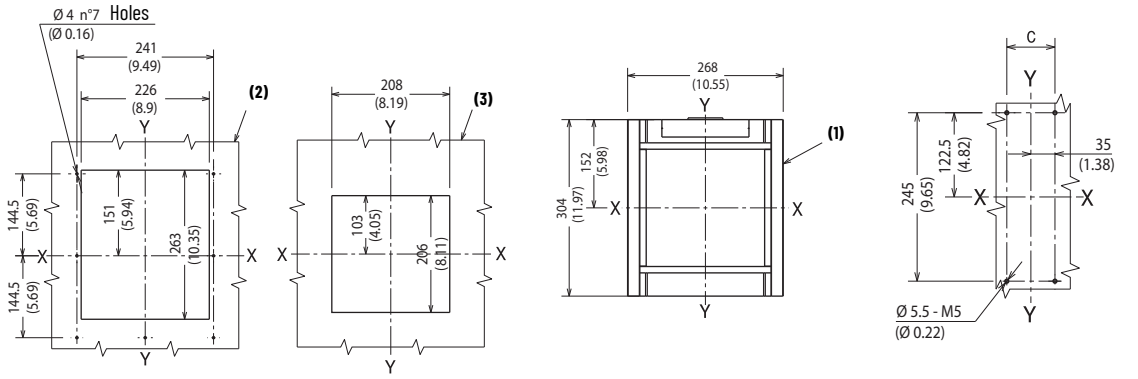

Drilling template for compartment door

Escutcheon for compartment door

Drilling template for mounting plate

Note	Information
1	Door escutcheon
2	Compartment door with escutcheon
3	Compartment door without escutcheon

Figure 237 - Cat. Nos. 140G-N-TLA63, -TLA64, -TLC63, -TLC64 Terminals

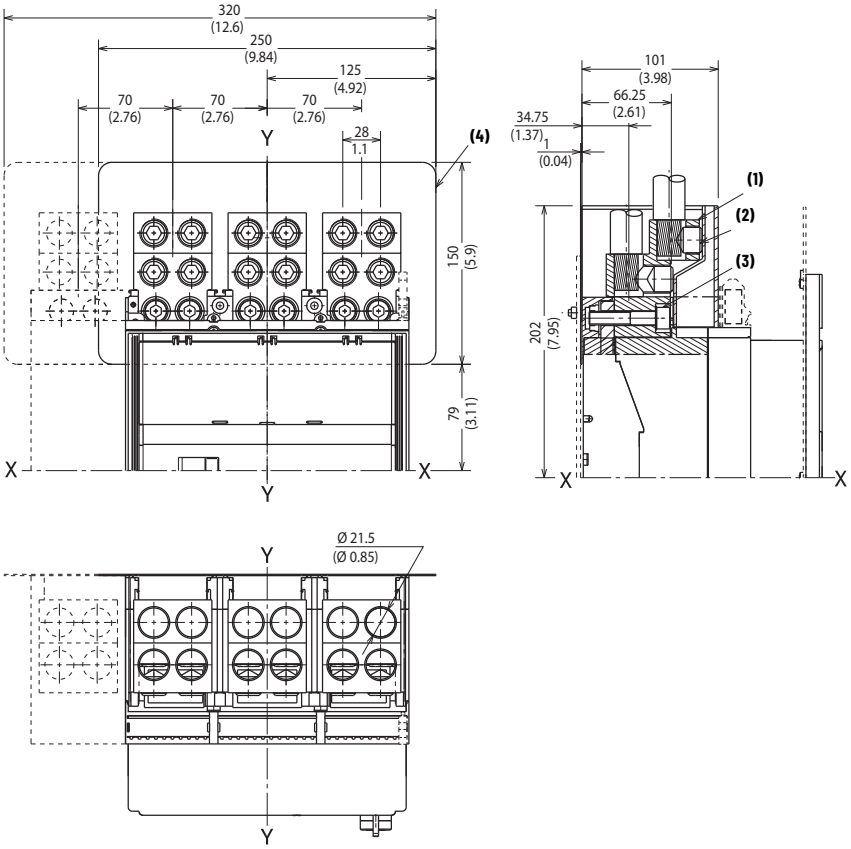

Note	Information
1	Terminals for cable connection
2	Tightening torque: 43 N•m
3	Tightening torque: 18 N•m
4	Required insulator panel; supplied terminals

Dimension tolerances ± 0.1 mm (0.004 in)

Figure 238 - Cat. Nos. 140G-N-TLV3, -TLV4, -TLH3, -TLH4 Rear Terminals

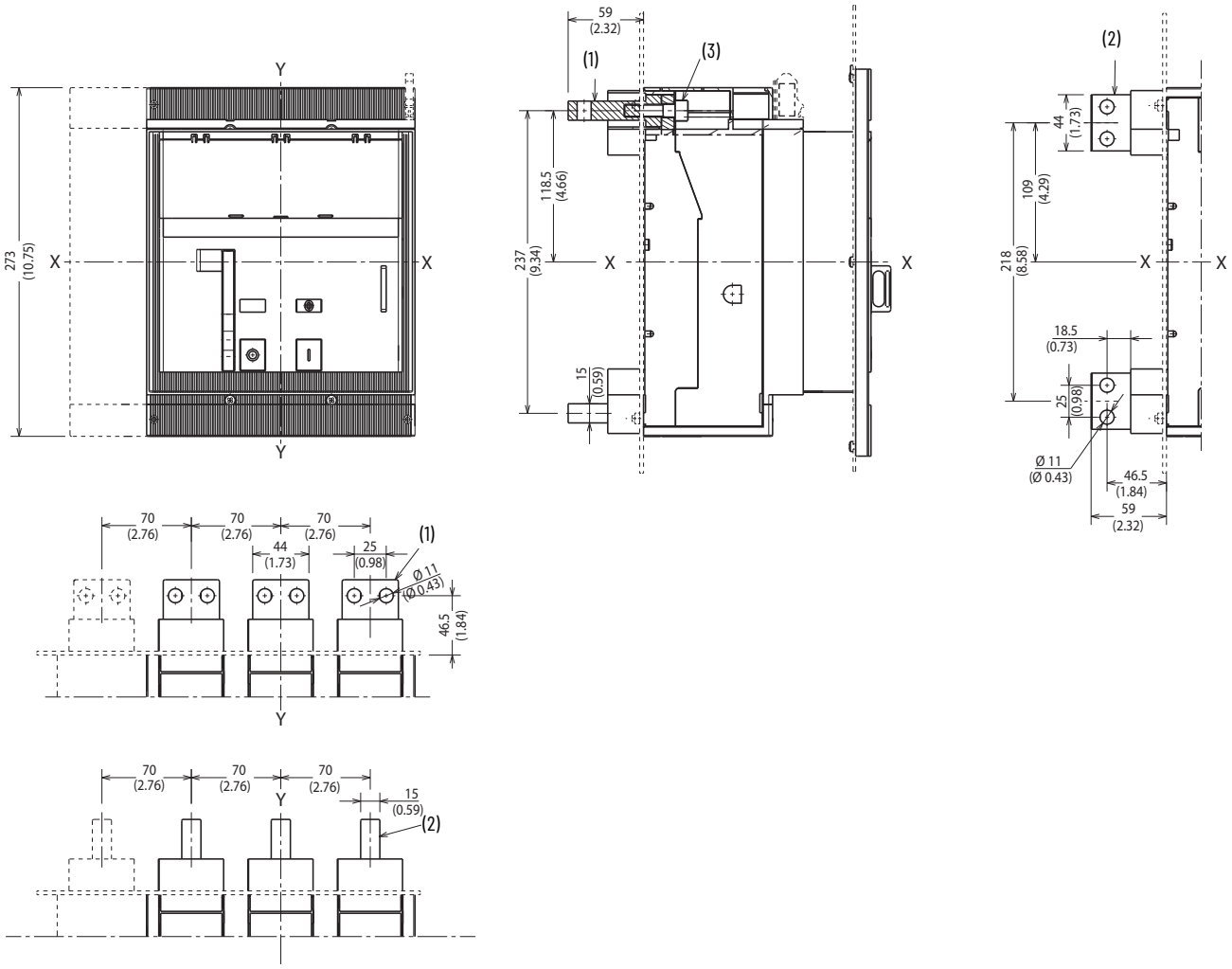

Note	Information
1	Rear horizontal terminals
2	Rear vertical terminals
3	Tightening torque: 20 N•m

Dimension tolerances ± 0.1 mm (0.004 in)

Figure 239 - Drilling template for mounting plate

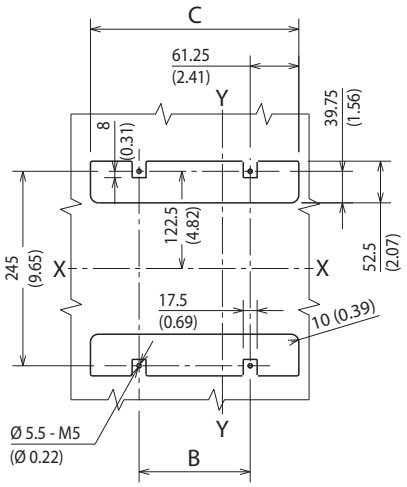

No. of Poles	B	C
3	70 (2.76)	192.5 (7.58)
4	140 (5.51)	262.5 (10.33)

Figure 240 - Cat. No. 140G-N-EXSLI3, -EXSLO3, -EXS4 Extended Front Spreader Terminals (IEC only)

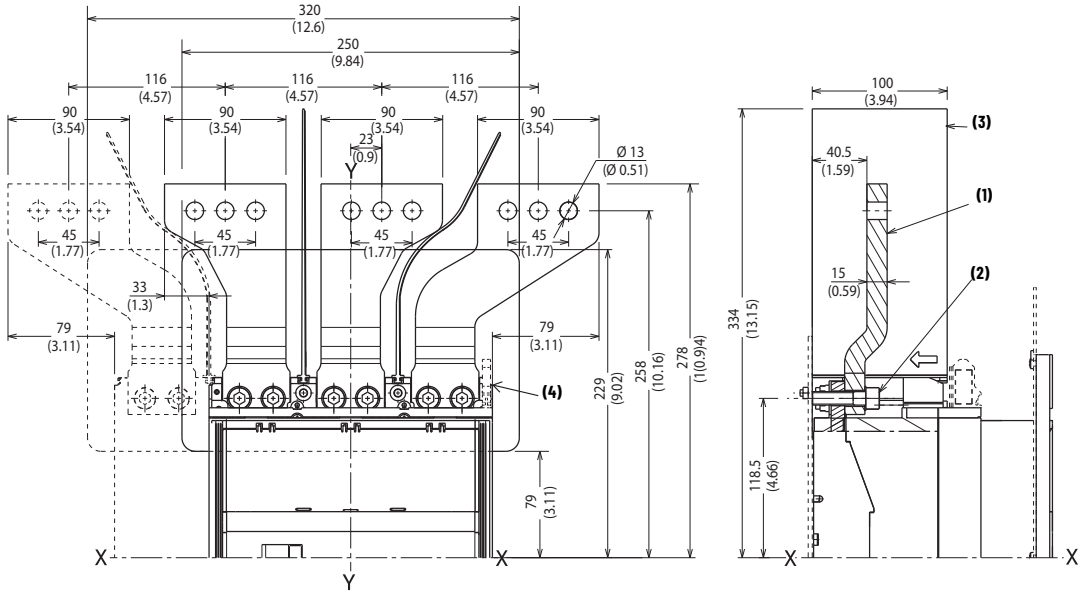

Note	Information
1	Extended spread terminals
2	Tightening torque: 18 N•m
3	Required 200 mm (7.87 in.) insulating phase barriers are provided
4	Required insulator panel; supplied with spreaders

Dimension tolerances ± 0.1 mm (0.004 in)

Figure 241 - Cat. Nos. 140G-N-EXT3, -EXT4 Extended Front Terminals (IEC only)

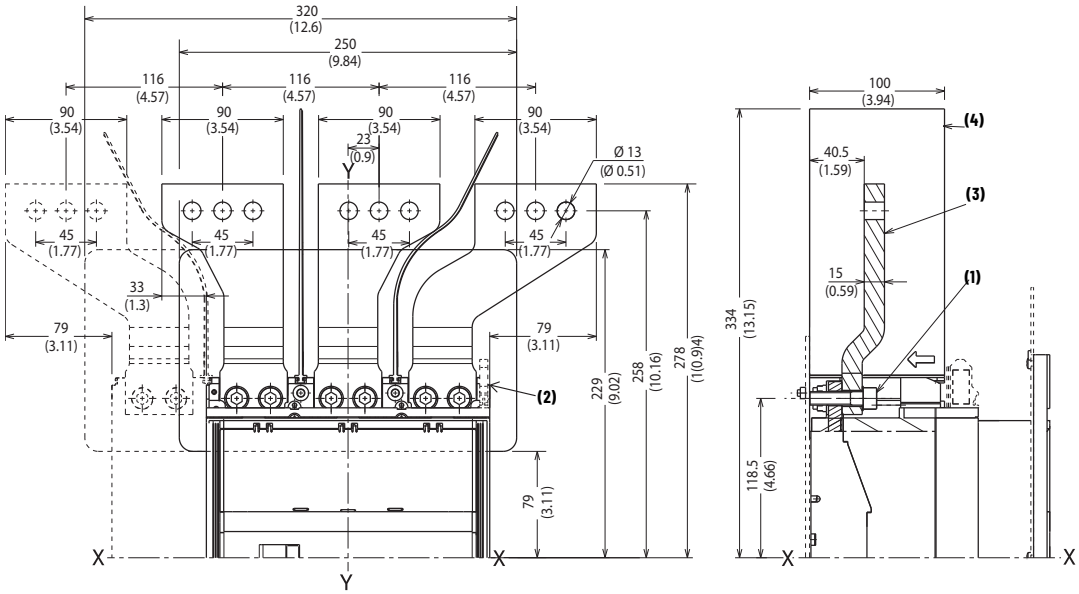

Note	Information
1	Tightening torque: 18 N•m
2	Required insulator panel; supplied with extended terminals
3	Extended terminals
4	Required 100 mm (3.94 in.) insulating phase barriers are provided

Bulletin 140G R-Frame

Dimensions are in millimeters (inches). Dimensions are not intended to be used for manufacturing purposes.

Dimension tolerances ± 0.1 mm (0.004 in)

Panel-mounted Breakers

Figure 242 - 2000 A (80/100%)...2500 A (80%) Breakers

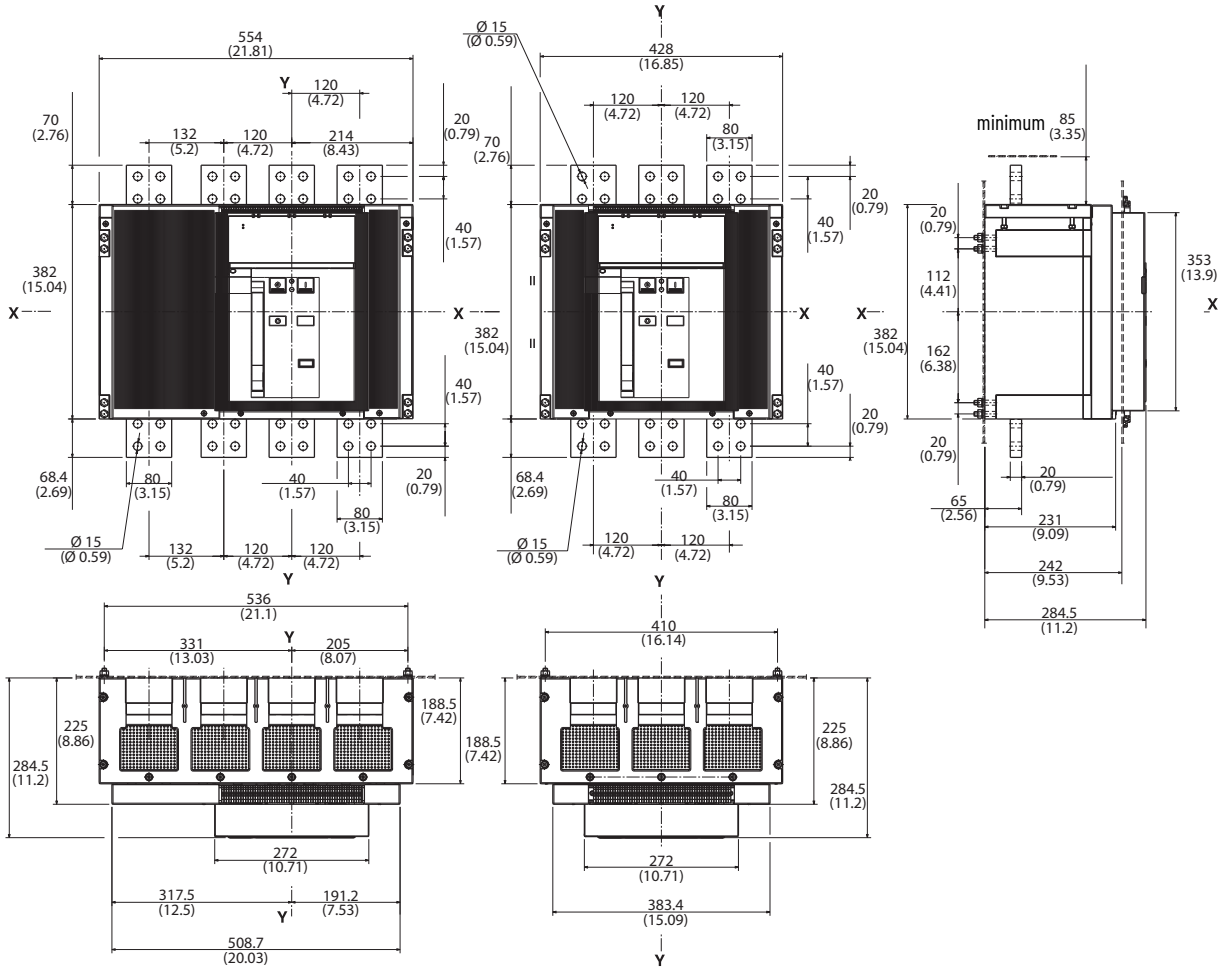

Figure 243 - Drilling Templates

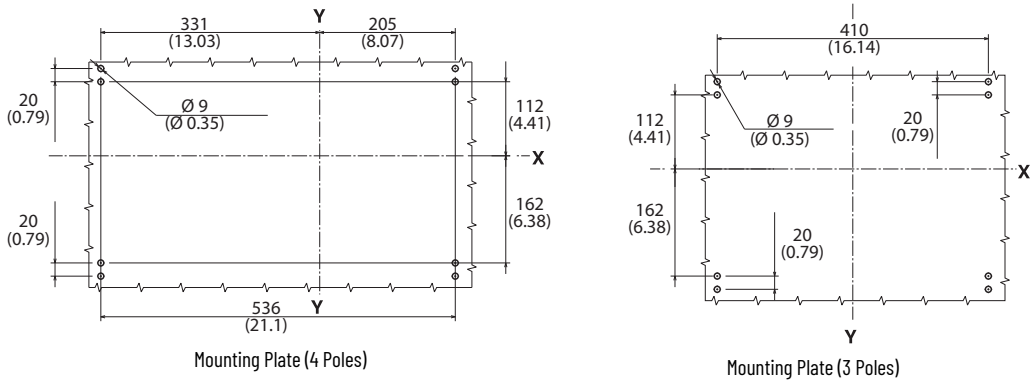

Mounting Plate (4 Poles)

Mounting Plate (3 Poles)

Dimension tolerances ± 0.1 mm (0.004 in)

Figure 244 - Version with Vertical Rear Terminals, 2500 A (100% rated)/3000 A (80% rated)

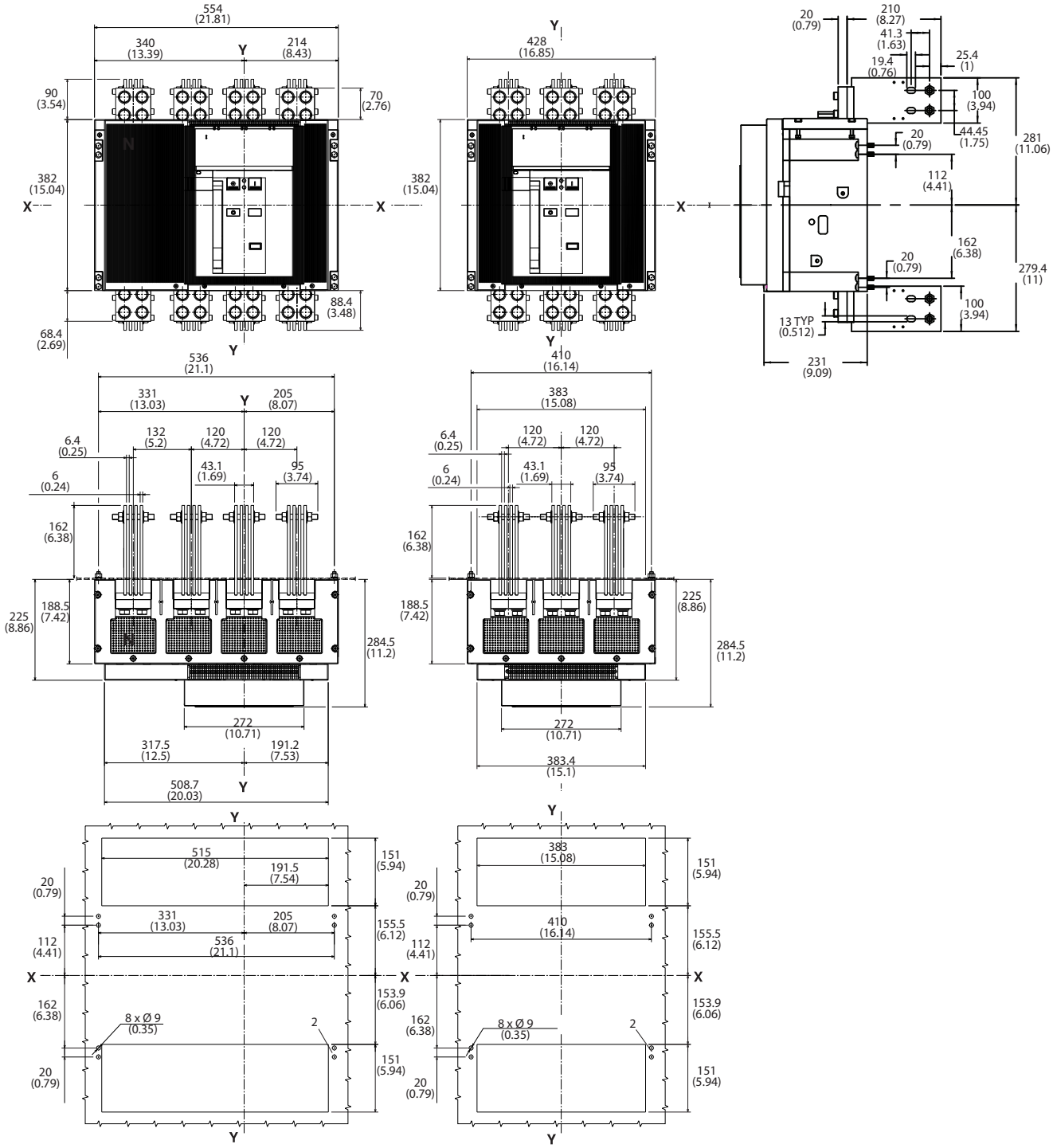

Dimension tolerances ± 0.1 mm (0.004 in)

Figure 245 - 3000 A Breakers (100% rated)

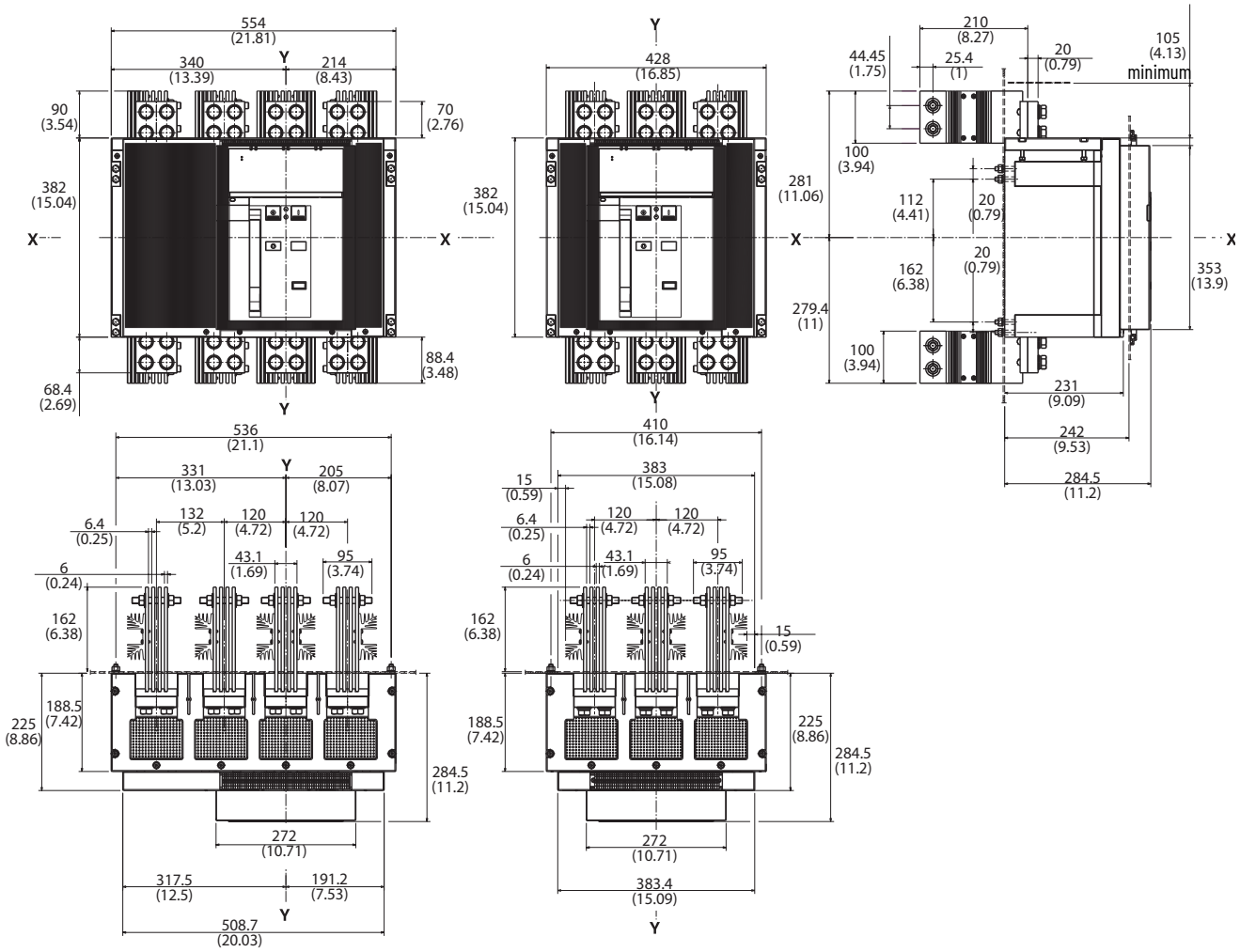

Figure 246 - Drilling Templates

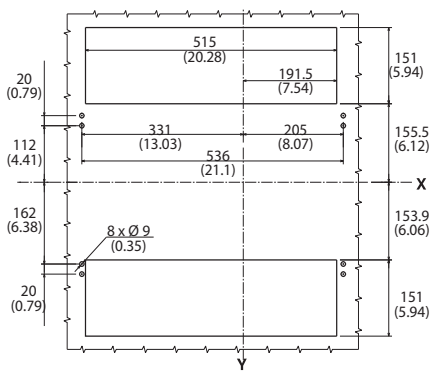

Mounting Plate (4 Poles)

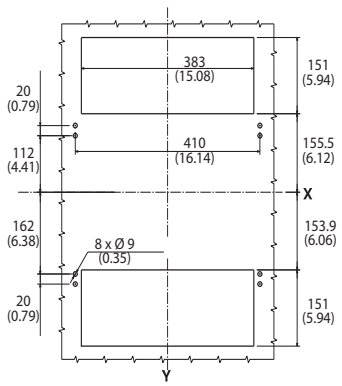

Mounting Plate (3 Poles)

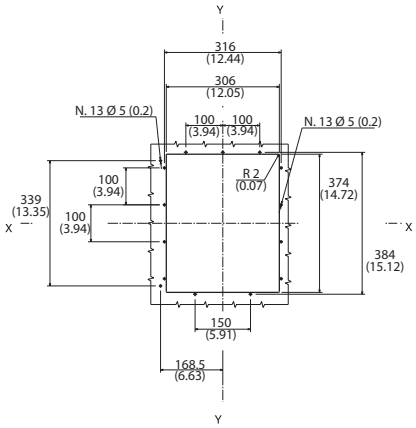

Compartment Door

Dimension tolerances ± 0.1 mm (0.004 in)

Figure 247 - Cat. No. 140G-R-TLV3, -TLV4 Terminals, 2000 A (80/100%)...2500 A (80%)

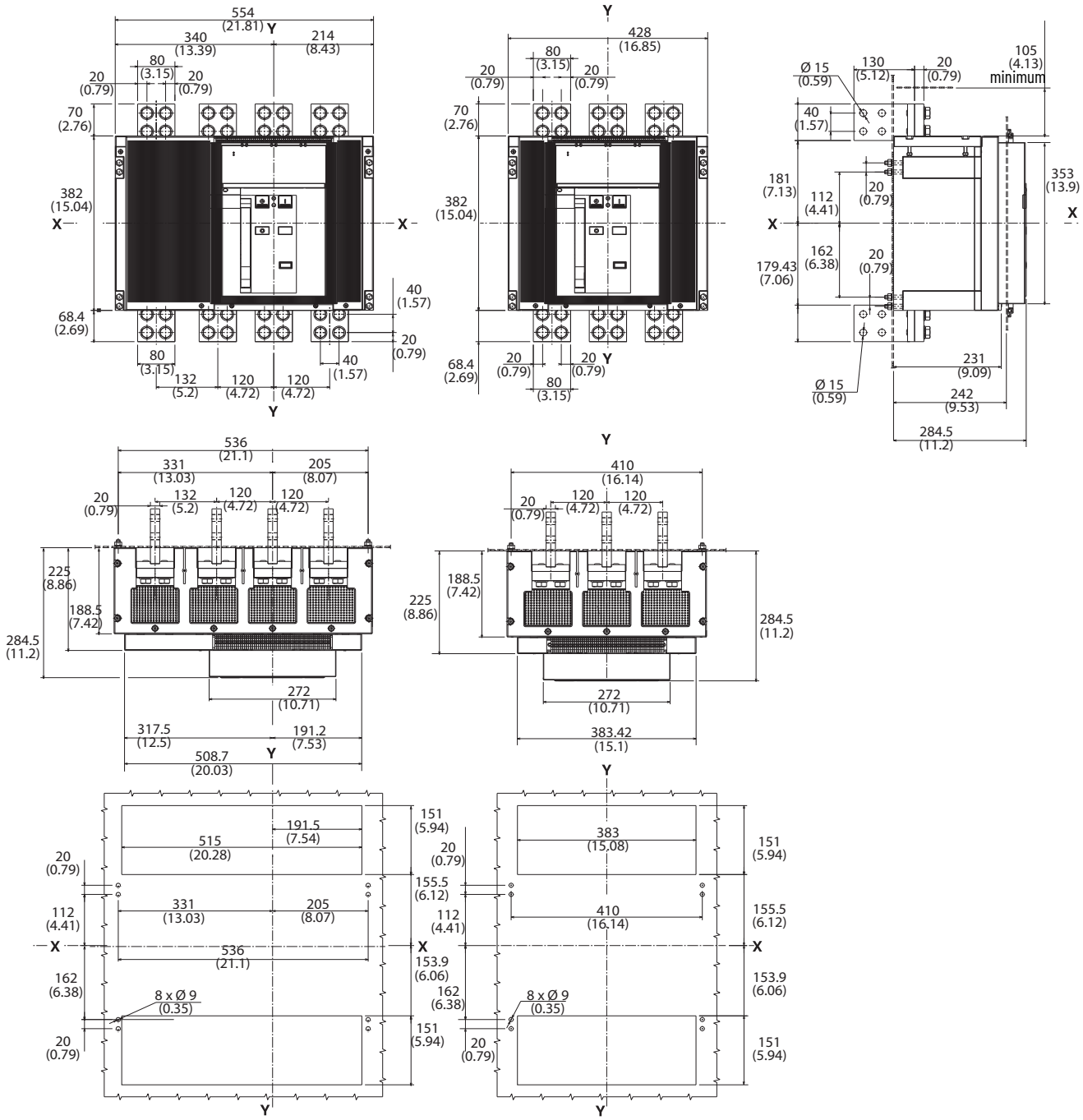

Bulletin 1494V Variable Depth, Flange-operated Circuit Breaker Operating Mechanisms

Dimensions are in inches (mm). Dimensions are not to be used for manufacturing purposes.

Dimension tolerances ± 0.1 mm (0.004 in)

Figure 248 - Enclosure with Handle Cutout

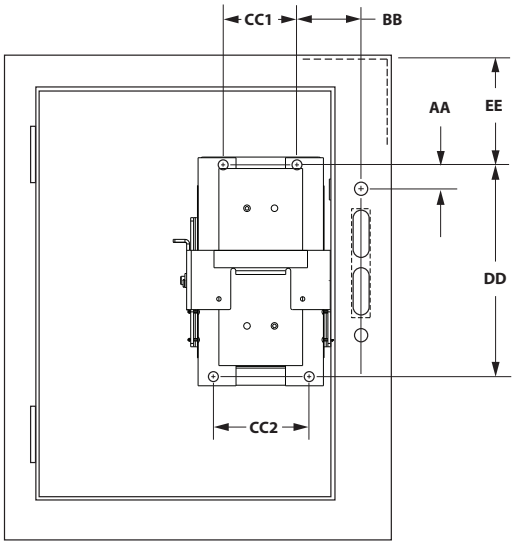

140G/MG Frame Size	AA	BB	CC1	CC2	DD	EE Wire Bending Space
G, H, I, J	5/16 (7.94)	1-41/64 (41.67)	3 (76.2)	3-1/2 (88.9)	7-1/2 (190.5)	6 (152.4)
K	29/64 (11.51)	1-47/64 (44.05)	4 (101.6)	4-1/2 (114.3)	9-5/16 (236.54)	12 (304.8)
M, N	4-1/2 (114.3)	4-1/32 (102.4)	5 (127)	5 (127)	13-1/2 (342.9)	12 (304.8)

Figure 249 - Enclosure without Handle Cutout

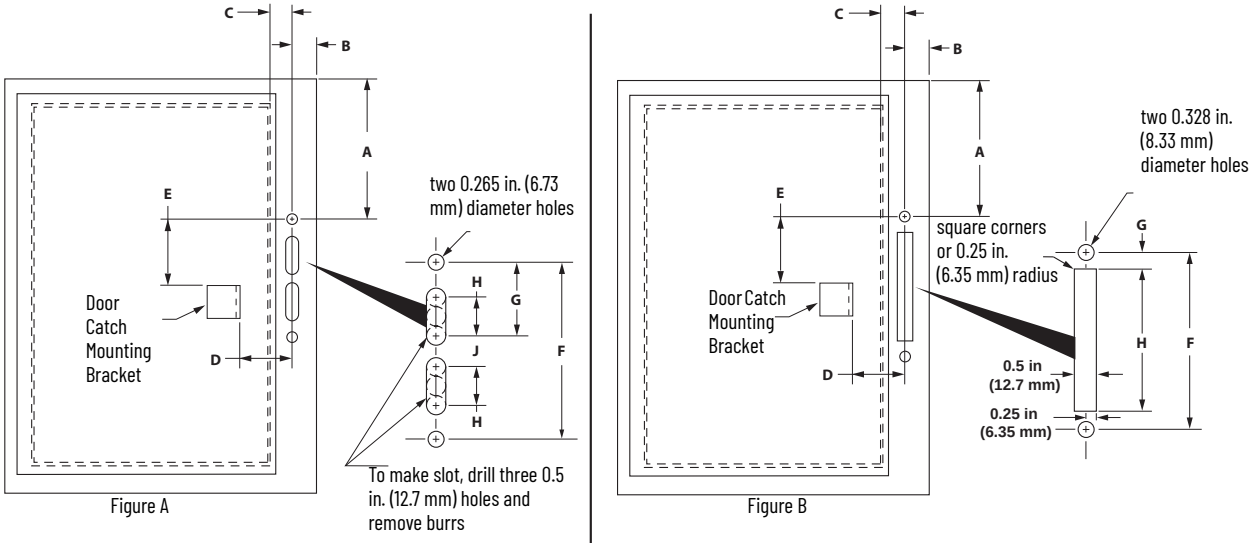

140G/MG Frame Size	Handle Cat. No.	A (min)	B (Min)	C (Max)	D	E	F	G	H	J
H	1494F-M1 (Figure A)	3-1/2 (88.9)	29/32 (23.01)	1-3/32 (27.8)	1-5/8 (41.3)	2-11/32 (59.5)	4-11/16 (119.1)	1-9/16 (39.7)	1 (25.4)	7/8 (22.23)
J		10-29/32 (277)	29/32 (23.01)	1-3/32 (27.8)	1-5/8 (41.3)	2-11/32 (59.5)	4-11/16 (119.1)	1-9/16 (39.7)	1 (25.4)	7/8 (22.23)
K		13-3/32 (332.6)	29/32 (23.01)	1-3/32 (27.8)	1-5/8 (41.3)	2-11/32 (59.5)	4-11/16 (119.1)	1-9/16 (39.7)	1 (25.4)	7/8 (22.23)
M	1494F-M2 (Figure B)	17-5/16 (439.74)	1-3/8 (34.9)	1-3/32 (27.8)	2 (50.8)	3-23/32 (94.5)	6-1/2 (165.1)	5/16 (7.94)	5-1/2 (139.7)	–
N		21-7/8 (555.63)	1-3/8 (34.9)	1-3/32 (27.8)	2 (50.8)	3-23/32 (94.5)	6-1/2 (165.1)	5/16 (7.94)	5-1/2 (139.7)	–

Notes:

Additional Resources

These documents contain additional information concerning related products from Rockwell Automation.

Resource	Description
Molded Case Circuit Breaker Selectivity Guide, publication 140G-TD050	Aids in selecting circuit breaker pairs for line and load side protection.
Selecting 80% or 100%-Rated Molded Case Circuit Breakers, publication 140G-AT001	Defines terms applicable to circuit breakers, explains the ratings for 100% versus 80% operation, and provides cases where 100% rated MCCBs could be beneficial.
Short-circuit Current Ratings and Your Industrial Control Panel, publication SCCR-AT002	Provides examples for short-circuit current ratings of panels based on the methods stated in UL 508A Supplement B.
UL Standards Listing for Industrial Control Products, publication CMPNTS-SR002	Assists original equipment manufacturers (OEMs) with construction of panels, to help ensure that they conform to the requirements of Underwriters Laboratories.
American Standards, Configurations, and Ratings: Introduction to Motor Circuit Design, publication IC-AT001	Provides an overview of American motor circuit design based on methods that are outlined in the NEC.
Industrial Components Preventive Maintenance, Enclosures, and Contact Ratings Specifications, publication IC-TD002	Provides a quick reference tool for Allen-Bradley industrial automation controls and assemblies.
Global Short-circuit Rating Tool, rok.auto/sccr	Provides coordinated high-fault branch circuit solutions for motor starters, soft starters, and component drives.
Safety Guidelines for the Application, Installation, and Maintenance of Solid-state Control, publication SGI-1.1	Designed to harmonize with NEMA Standards Publication No. ICS 1.1-1987 and provides general guidelines for the application, installation, and maintenance of solid-state control in the form of individual devices or packaged assemblies incorporating solid-state components.
Industrial Automation Wiring and Grounding Guidelines, publication 1770-4.1	Provides general guidelines for installing a Rockwell Automation industrial system.
Product Certifications website, rok.auto/certifications.	Provides declarations of conformity, certificates, and other certification details.
Maintenance	
Bulletin 140G Maintenance Instructions, publication 140G-IN108	Provides general installation and maintenance instructions for Bulletin 140G/MG devices.
Bulletin 140G Servicing Instructions-140G-N, 140G-NS, LSI, LSIG, LSIG-MM, publication 140G-IN075	Provides servicing and maintenance instructions for Bulletin 140G N- and NS-Frame devices.
Installation, Spacing, and General Instructions for Main Breaking Frames and Assembled Breakers	
Bulletin 140G/140MG Installation Instructions-140G-G, 140MG-G, publication 140G-IN076	Provides installation instructions for Bulletin 140G/MG G-Frame devices.
Bulletin 140G/MG Installation Instructions-140G-H, 140MG-H, publication 140G-IN097	Provides installation instructions for Bulletin 140G/MG H-Frame devices.
Bulletin 140G/MG Installation Instructions-140G-I, publication 140G-IN095	Provides installation instructions for Bulletin 140G/MG I-Frame devices.
Bulletin 140G/140MG Installation Instructions-140G-J, 140MG-J, publication 140G-IN106	Provides installation instructions for Bulletin 140G/MG J-Frame devices.
Bulletin 140G/140MG K-Frame Installation Instructions, publication 140G-IN021	Provides installation instructions for Bulletin 140G/MG K-Frame devices.
Bulletin 140G/140MG M-Frame Installation Instructions, publication 140G-IN042	Provides installation instructions for Bulletin 140G/MG M-Frame devices.
Bulletin 140G Installation Instructions-140G-N, 140G-NS, publication 140G-IN070	Provides installation instructions for Bulletin 140G/MG N- and NS-Frame devices.
Bulletin 140G R-Frame Installation Instructions, publication 140G-IN074	Provides installation instructions for Bulletin 140G/MG R-Frame devices.
Trip Unit Adjustment	
Bulletin 140G LSI-LSIG Adjustment Instructions-140G-H, 140G-J, publication 140G-IN100	Provides setup instructions for DIP switch trip units for H- and J-Frame MCCBs.
Bulletin 140MG Adjustment Instructions-140MG-H, 140MG-J, publication 140G-IN101	Provides setup instructions for DIP switch trip units for H- and J-Frame MPCBs.
Bulletin 140G J Frame 15 A LSI-LSIG Adjustment, publication 140G-IN142	Provides setup instructions for DIP switch trip units for H- and J-Frame MCCBs.
Adjustment instructions LSIG, LSI, LSIG-MM for 140G-K, 140G-M, publication 140G-IN066	Provides setup instructions for DIP switch trip units for K- and M-Frame MCCBs.
Bulletin 140G LSI Getting Started-140G-N, 140G-NS, publication 140G-IN118	Provides setup instructions for DIP switch trip units for N- and NS-Frame devices.
Bulletin 140G/140MG LSIG and LSIG-MM Release-140G-N, 140G-NS, 140G-R Installation Instructions, publication 140G-IN067	Provides setup instructions for DIP switch trip units for N-, NS-, and R-Frame MCCBs.
Bulletin 140G LSIG Getting Started-140G-N, 140G-NS, 140G-R, publication 140G-IN068	Provides setup instructions for DIP switch trip units for N-, NS-, and R-Frame MCCBs.
Bulletin 140G LSIG-MM Getting Started-140G-N, 140G-NS, 140G-R, publication 140G-IN069	Provides setup instructions for LCD trip units for N-, NS-, and R-Frame MCCBs.

You can view or download publications at rok.auto/literature.

Rockwell Automation Support

Use these resources to access support information.

Technical Support Center	Find help with how-to videos, FAQs, chat, user forums, Knowledgebase, and product notification updates.	rok.auto/support
Local Technical Support Phone Numbers	Locate the telephone number for your country.	rok.auto/phonesupport
Technical Documentation Center	Quickly access and download technical specifications, installation instructions, and user manuals.	rok.auto/techdocs
Literature Library	Find installation instructions, manuals, brochures, and technical data publications.	rok.auto/literature
Product Compatibility and Download Center (PCDC)	Download firmware, associated files (such as AOP, EDS, and DTM), and access product release notes.	rok.auto/pcdc

Documentation Feedback

Your comments help us serve your documentation needs better. If you have any suggestions on how to improve our content, complete the form at rok.auto/docfeedback.

Allen-Bradley, E1 Plus, E3, E3 Plus, E300, expanding human possibility, ProposalWorks, and Rockwell Automation are trademarks of Rockwell Automation, Inc.
EtherNet/IP is a trademark of ODVA, Inc.
Trademarks not belonging to Rockwell Automation are property of their respective companies.

Rockwell Automation maintains current product environmental compliance information on its website at rok.auto/pec.

Rockwell Otomasyon Ticaret A.Ş. Kar Plaza İş Merkezi E Blok Kat:6 34752, İçerenköy, İstanbul, Tel: +90 (216) 5698400 EEE Yönetmeliğine Uygundur

Connect with us.

rockwellautomation.com — expanding **human possibility**®

AMERICAS: Rockwell Automation, 1201 South Second Street, Milwaukee, WI 53204-2496 USA, Tel: (1) 414.382.2000, Fax: (1) 414.382.4444
EUROPE/MIDDLE EAST/AFRICA: Rockwell Automation NV, Pegasus Park, De Kleetlaan 12a, 1831 Diegem, Belgium, Tel: (32) 2 663 0600, Fax: (32) 2 663 0640
ASIA PACIFIC: Rockwell Automation, Level 14, Core F, Cyberport 3, 100 Cyberport Road, Hong Kong, Tel: (852) 2887 4788, Fax: (852) 2508 1846
UNITED KINGDOM: Rockwell Automation Ltd. Pitfield, Kiln Farm Milton Keynes, MK11 3DR, United Kingdom, Tel: (44)(1908) 838-800, Fax: (44)(1908) 261-917

Publication 140G-TD101B-EN-P - November 2022
Supersedes Publication 140G-TD101A-EN-P - September 2022

Copyright © 2022 Rockwell Automation, Inc. All rights reserved. Printed in the U.S.A.