Allen-Bradley

1398 ULTRA Plus Series Positioning Drive Module

(Catalog Nos. 1398-PDM-10, -20, -30, -50, -75, -100, -150, and -150B)

Installation Manual

Rockwell Automation

Important User Information

Because of the variety of uses for the products described in this publication, those responsible for the application and use of this control equipment must satisfy themselves that all necessary steps have been taken to assure that each application and use meets all performance and safety requirements, including any applicable laws, regulations, codes and standards.

The illustrations, charts, sample programs and layout examples shown in this guide are intended solely for purposes of example. Since there are many variables and requirements associated with any particular installation, Allen-Bradley does not assume responsibility or liability (to include intellectual property liability) for actual use based upon the examples shown in this publication.

Allen-Bradley publication SGI-1.1, *Safety Guidelines for the Application, Installation and Maintenance of Solid-State Control* (available from your local Allen-Bradley office), describes some important differences between solid-state equipment and electromechanical devices that should be taken into consideration when applying products such as those described in this publication.

Reproduction of the contents of this copyrighted publication, in whole or part, without written permission of Rockwell Automation, is prohibited.

Throughout this manual we use notes to make you aware of safety considerations. :

ATTENTION

Identifies information about practices or circumstances that can lead to personal injury or death, property damage or economic loss

Attention statements help you to:

- identify a hazard,
- avoid a hazard, and
- recognize the consequences.

IMPORTANT

Identifies information that is critical for successful application and understanding of the product.

Allen-Bradley is a trademark of Rockwell Automation
GML Ultra™ Software is a trademark of Rockwell Automation
UL and cUL are registered trademarks of Underwriters Laboratories
Windows™ is a trademark of Microsoft Corporation

Preface

Introduction P-1
Who Should Use this Manual P-1
Purpose of this Manual P-1
Contents of this Manual. P-2
Related Documentation P-3
Conventions Used in this Manual P-3
Product Receiving and Storage Responsibility P-4
Allen-Bradley Support P-4
Local Product Support P-4
Technical Product Assistance P-4

Chapter 1

Overview of the ULTRA Plus PDM System

Functional Description 1-1
System Overview 1-2
GML Ultra™ for Windows™ 1-3
Positioning Drive Modules 1-4
Power Supply Module (PSM) 1-5
Motors 1-5
Personality Module (PM). 1-5
Manuals 1-5
Accessories 1-6
Operator Terminal. 1-6
Transformers 1-7
Auxiliary Power Supply Module (PSM) 1-7
Cables 1-7
Shunt Kits. 1-8
Personal Computer (PC) 1-8

Chapter 2

Install the ULTRA Plus PDM Components

Mounting 2-1
Environment 2-2
Ventilation 2-3
Transformer Sizing 2-4
Mounting Requirements 2-10
1398-PDM-25, 50, 100, and 150 Power Supply Module 2-14
PSM Auxiliary Transformers. 2-14
Motors 2-16
External Shunt 2-17
Operator Terminal. 2-19
I/F Conversion Card, 24VDC Sourcing 2-21
PDM Fusing Requirements 2-22
Short Circuit Protection. 2-22
Personality Module Installation 2-23

Installing the Personality Module (PM) 2-23
System Firmware Installation. 2-25
Installing the Firmware EPROMs 2-26
Jumper and DIP Switches 2-26
Regulatory Requirements 2-27
Electromagnetic Compatibility Directive 2-28
Bonding Your System 2-31
Motors and Cables 2-33
Low Voltage Directive. 2-33
Electromagnetic Compatibility 2-36
Filtering 2-38
AC Line Filter Selection 2-40
Grounding 2-42
Shielding and Segregation 2-43

Chapter 3

Wire the ULTRA Plus PDM Components

System Power Connections 3-1
1398-PDM-10, 20, 75, and 150B. 3-1
1398-PDM-25, 50, 100, and 150 3-5
External Shunt Connections 3-12
Replacing the PSM Shunt Fuse 3-15
Operator Terminals 3-16
Power Connections (1398-HMI-002) 3-16
Power Connections (1398-HMI-003) 3-17
Motors. 3-18
Power Connections 3-18
Shield Termination 3-19
Digital Inputs and Outputs 3-20
I/F 24V Sourcing. 3-23
Digital Inputs 3-25
Digital Outputs 3-27
Connecting Inputs and Outputs Together 3-27
Analog Input 3-28
Analog Output 3-29
Monitor Output 3-29
Ready Relay Output 3-30
Enabled Relay Output 3-31
Encoder 1 3-33
Encoder 2 3-35
Slaving an ULTRA Plus PDM to Another 3-36
Step and Direction Inputs 3-37
Serial Port Connections 3-39
Host Computer 3-39
Operator Terminal 3-41
Networking 3-44
Cables 3-49

Apply Power for the First Time

Chapter 4

1398-PDM-10, 20, 30, 75, and 150B 4-1
1398-PDM-25, 50, 100, and 150 4-4
Power Supply Module 4-5
Start-up Procedure for PDM. 4-6
Motors. 4-8
Operator Terminal 4-11
Personality Module. 4-11

Check for Problems in the System

Chapter 5

Light Emitting Diodes (LED) 5-1
Positioning Drive Module STATUS LED 5-1
DC Bus Power (1398-PDM-25, 50, 100, and 150). 5-2
Operator Terminal Status Screens. 5-3
Personality Module Default Initialization 5-3
Error Messages and Error Output 5-4

Specifications

Appendix A

1398-PDM-10, 20, 30, 75, and 150B A-1
1398 PDM-25, 50, 100, and 150 . . . . . A-2
Operator Terminals A-3
Transformers A-4
Single Phase Transformer specifications A-4
Three Phase Transformer specifications A-4

Options and Accessories

Appendix B

PDMs and Optional Accessories. B-1
I/F Conversion Card B-2
Power Supply Modules B-2
AC Line Filters B-3
Cables B-4
Transformers B-5
Motor Identification. B-5
Motor Connectors B-6
Motor Shaft Seal Kits. B-7

Introduction

Read this preface to familiarize yourself with the rest of the manual. This preface covers the following topics:

- Who should use this manual
- The purpose of this manual
- Contents of this manual
- Related documentation
- Conventions used in this manual
- Product receiving and storage responsibility
- Allen-Bradley support

Who Should Use this Manual

Use this manual if you are responsible for designing, installing, programming, or troubleshooting the ULTRA Plus PDM.

If you do not have a basic understanding of the ULTRA Plus PDM, contact your local Allen-Bradley representative for information on available training courses before using this product.

Purpose of this Manual

This manual describes the function and installation of the ULTRA Plus Positioning Drive Module (PDM) products and standard Rockwell Automation/ Allen-Bradley motors recommended for use with the ULTRA Plus PDM. It is intended for engineers or technicians directly involved in the installation, operation, and field maintenance of the ULTRA Plus PDM.

Contents of this Manual

Refer to the following manual for the descriptive contents of this installation manual.

Chapter	Title	Contents
	Preface	Describes the purpose, background, and scope of this manual. Also specifies the audience for whom this manual is intended.
1	Overview	Gives a functional description of the ULTRA Plus PDM product series.
2	Install ULTRA Plus PDM Components	Provides mounting information for the ULTRA Plus PDM system.
3	Wire the ULTRA Plus PDM Components	Provides connection information for the ULTRA Plus PDM system.
4	Apply Power for the First Time	Outline steps when applying power to equipment for the first time.
5	Check for Problems in the System	Diagnostic aids that help isolate problems to a system module.
Appendix A	Specifications	Provides physical, electrical, environmental, and functional specifications for the
Appendix B	Options and Accessories	Provides identification numbers and descriptions of the ULTRA Plus PDM and related products

Related Documentation

The following documents contain additional information concerning related Allen-Bradley products. To obtain a copy, contact your local Allen-Bradley office or distributor.

For this information	Read This Document	Document Number
An overview of the ULTRA Plus Positioning Drive	*ULTRA Plus Brochure*	1398-2.0
A description and specifications for the ULTRA Series family.	*ULTRA Series Product Data*	1398-2.0
Information to help you install and set up your GML Ultra™ software.	*GML Ultra Getting Started Manual*	1398-5.10
Step oriented information that will help you use GML Ultra to program your ULTRA Plus system.	*GML Ultra User Manual*	1398-5.11
Reference material that explains the theory behind how you program your ULTRA Plus for your application needs.	*GML Ultra Reference Manual*	1398-5.12
An article on wire sizes and types for grounding electrical equipment	*National Electrical Code*	Published by the National Fire Protection Association of Boston, MA.
A complete listing of current Allen-Bradley documentation, including ordering instructions. Also indicates whether the documents are available on CD-ROM or in multi-languages.	*Allen-Bradley Publication Index*	SD499
A glossary of industrial automation terms and abbreviations	*Allen-Bradley Industrial Automation Glossary*	AG-7.1

Conventions Used in this Manual

The following conventions are used throughout this manual:

- Bulleted lists such as this one provide information, not procedural steps.
- Numbered lists provide sequential steps or hierarchical information.
- Words that you type or select appear in bold.
- When we refer you to another location, the section or chapter name appears in italics.

Product Receiving and Storage Responsibility

You, the customer, are responsible for thoroughly inspecting the equipment before accepting the shipment from the freight company. Check the item(s) you receive against your purchase order. If any items are obviously damaged, it is your responsibility to refuse delivery until the freight agent has noted the damage on the freight bill. Should you discover any concealed damage during unpacking, you are responsible for notifying the freight agent. Leave the shipping container intact and request that the freight agent make a visual inspection of the equipment.

Leave the product in its shipping container prior to installation. If you are not going to use the equipment for a period of time, store it:

- in a clean, dry location
- within an ambient temperature range of 0 to 65° C (32 to 149° F)
- within a relative humidity range of 5% to 95%, non-condensing
- in an area where it cannot be exposed to a corrosive atmosphere
- in a non-construction area

Allen-Bradley Support

Allen-Bradley offers support services worldwide, with over 75 Sales/Support Offices, 512 authorized Distributors and 260 authorized Systems Integrators located throughout the United States alone, plus Allen-Bradley representatives in every major country in the world.

Local Product Support

Contact your local Allen-Bradley representative for:

- sales and order support
- product technical training
- warranty support
- support service agreements

Technical Product Assistance

If you need to contact Allen-Bradley for technical assistance, please review the information in the “Check for Problems in the System” chapter first. Then call your local Allen-Bradley representative. For the quickest possible response, please have the catalog numbers of your products available when you call.

Overview of the ULTRA Plus PDM System

Functional Description

The ULTRA Plus PDM motion control system is a positioning drive system which integrates a high performance sinusoidal brushless motor velocity controller and a programmable position controller into a single package. Traditional motion controller architecture uses separate drive and position control modules, with an analog interface between individual components. The ULTRA Plus PDM motion controllers use advanced microprocessor technology to control both position and velocity with a single processor, eliminating the need for any analog interface. The single processor architecture eliminates the problems associated with analog circuitry, such as offset and thermal drift. Both the velocity and position control loops are closed digitally, so gain parameters are stored as numbers which give repeatable results over time and from controller to controller.

Figure 1.1 ULTRA Plus PDM Product Family

The ULTRA Plus PDM drive may be used as a distributed motion control element integrated with a host computer in a flexible automation system or as a stand-alone, programmable motion controller. Optically isolated I/O and power supplies are integrated into the products.

The electronic gearing feature allows the closed-loop axis to follow a second (master) encoder at a programmable ratio. A multi-axis addressing scheme (multi-drop operation) allows multiple ULTRA Plus PDM drives to be controlled from a host computer over a single serial communications link.

An ULTRA Plus PDM system consists basically of the following:

- Positioning Drive Module, which controls the position, velocity and torque of the motor,
- Personality Module that plugs into the ULTRA Plus PDM to match the controller with the motor used,
- Brushless motor with feedback from an integral optical encoder,
- Power Supply Module, integral to the ULTRA Plus PDMs 1398-PDM-10, 20, 30, 75, and 150B), and separate for the ULTRA Plus PDMs (1398-PDM-25, 50, 100, and 150), and
- Operator Terminal.

Combinations of matched ULTRA Plus PDMs and motors are available providing continuous torques of 0.34 Nm to 88.14 Nm (3 inch/pound to 750 inch/pound), and speeds up to 6000 RPM.

System Overview

An ULTRA Plus Positioning Drive Module (PDM) motion control system consists of a number of components connected to accomplish a specific function. This section provides a brief overview of the various components of the ULTRA Plus Positioning Drive Module (PDM) motion control system.

Figure 1.2
ULTRA Plus PDM Control System

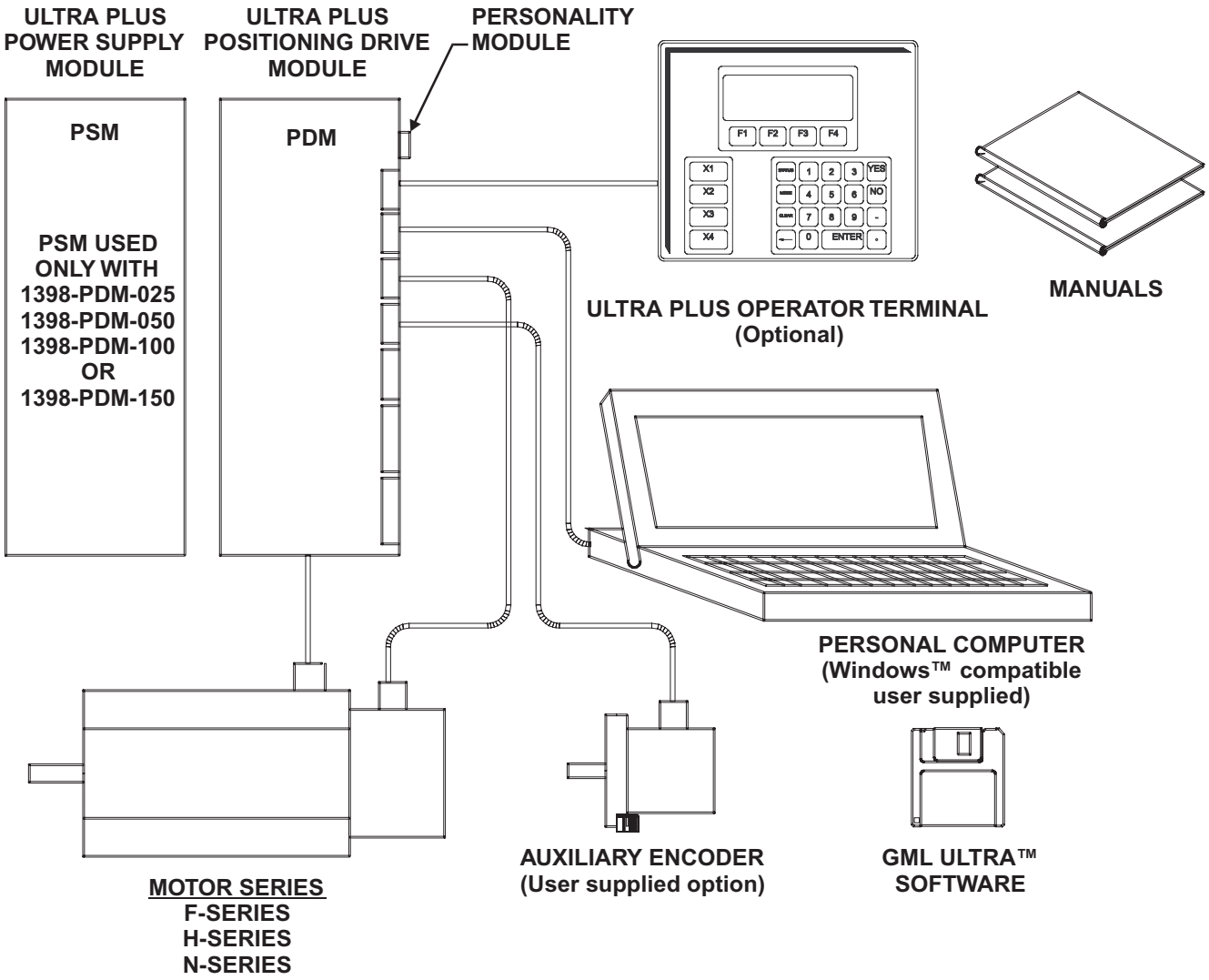

GML Ultra™ for Windows™

GML is an exclusive Graphical Motion Control Language from Allen-Bradley. GML integrates software programming and debugging to solve your motion control problems. It offers a Microsoft Windows™ interface to the ULTRA Plus PDM series of controllers.

GML Ultra Software uses a flow chart approach to motion control programming. You produce a diagram (motion program) by placing function blocks (representing the specific actions) on the computer, then connect them in the proper order of operations. Then, you enter the motion and process specifications using a fill in the form approach. Each block has its own form.

After a diagram is downloaded to the ULTRA Plus PDM, it is translated into a program or script in the native language of the motion controller.

Positioning Drive Modules

The ULTRA Plus PDM is a self-contained single axis programmable motion controller. The ULTRA Plus PDM provides control and power for the brushless servo motor. Motion programs are stored in onboard nonvolatile memory. Two RS-232/RS-422 serial ports provide communications with the personal computer and the optional Operator Terminal. Optically isolated digital I/O allows simple machine interfacing and control.

ULTRA Plus PDMs are manufactured in different packages which cover a wide range of power capability. The 1398-PDM-10, 20, 30, 75, and 150B incorporate an integral power supply in each, and supply continuous torques of 3 to 450 inch–pounds in combination with standard motors. The 1398-PDM-25, 50, 100, and 150 use a separate power supply module, which can be shared among multiple drives, and provide continuous torques of 20 to 750 inch pounds with the standard motors.

Integral Power Supply Modules

The 1398-PDM-10, 20, 30, 75, and 150B are rated for 10, 20, 30, 75, and 150 amp peak currents respectively. These modules are packaged with an integral power supply to achieve a small size.

Input power to a 1398-PDM-10, 20, or 30 is single phase 115 or 230VAC. Input power to a 1398-PDM-75 or 1398-PDM-150B is three-phase 115 or 230VAC. The input power may be optionally isolated through a transformer. These ULTRA Plus PDMs have a built-in solid state “soft charge” of the internal DC bus capacitor. They also include a built-in dissipative shunt regulator that provides synchronous motor dynamic braking. The ULTRA Plus PDMs allow use of an optional external shunt resistor for applications requiring higher shunt power capability than provided by the internal shunt resistor.

Separate Power Supply Modules

The 1398-PDM-25, 50, 100, and 150 are rated for 25, 50, 100, and 150 amp peak currents respectively. These ULTRA Plus PDM modules use a separate power supply module (1398-PSM-50 or 1398-PSM-125), which may be shared among multiple ULTRA Plus PDMs to achieve the most economical system package. Other than the packaging and power ranges, all the ULTRA Plus PDMs are all identical in setup and programming.

Power Supply Module (PSM)

The power supply module is only required for 1398-PDM-25, 50, 100, and 150 systems. The Power Supply Module (PSM) can supply DC power to as many as six ULTRA Plus PDM modules. The only input to the PSM is 100–240 VAC single or three phase power. The input power may be optionally isolated through a transformer. The output is a two wire DC bus. The PSM requires no adjustments, protects itself, provides troubleshooting diagnostics, and has a built-in solid state "soft charge" of the DC bus capacitors. It also includes a built-in dissipative shunt regulator that provides quick discharge of the DC bus capacitors and doubles as an emergency synchronous motor dynamic brake.

Motors

A wide range of Allen-Bradley H-Series, F-Series, and N-Series permanent magnet synchronous motors, are available for use with the ULTRA Plus PDM modules. Each motor includes an integrally mounted encoder. Most motors are available with options including spring set brake and/or shaft oil seal. Military Standard (MS) connectors are standard for all H-Series and F-Series motors.

Personality Module (PM)

The Personality Module is a nonvolatile memory device which stores the information necessary to customize an ULTRA Plus PDM for a specific application. The PM holds parameters to match the encoder feedback, motor and the drive, as well as user programs and parameters. A Personality Module may be physically removed and transferred to another ULTRA Plus PDM if the replacement of a PM is necessary to simplify servicing the machine.

Manuals

This installation manual contains all the information required for mounting and wiring the motor and ULTRA Plus PDM. The GML Ultra Software manuals contain all the information to quickly configure the ULTRA Plus PDM and develop application programs.

Accessories

Operator Terminal

The optional 1398 Operator Terminal allows the machine operator convenient access to status information, program variables, control functions, and message display capabilities. The Operator Terminal has a bright 4 line by 20 character vacuum fluorescent display and a sealed membrane keyboard with tactile feedback.

The two available Operator Terminals display multiple status screens for monitoring and diagnostics. Four programmable function keys are available to perform up to twenty-four (24) predefined functions, some of which are selecting and running a program, jogging the system, and stopping a program. The GML Ultra Software may display messages and prompts on the screen, and receive input from the keypad. Four additional user programmable keys identified as "X" keys provide extra flexibility within a user's program.

Figure 1.3
ULTRA Plus 1398-HMI-002 Operator Terminal (front)

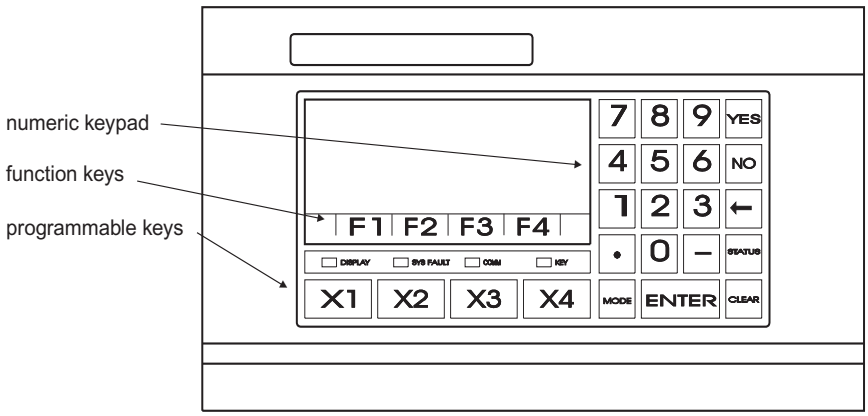

Figure 1.4
ULTRA Plus 1398-HMI-003 Operator Terminal (front)

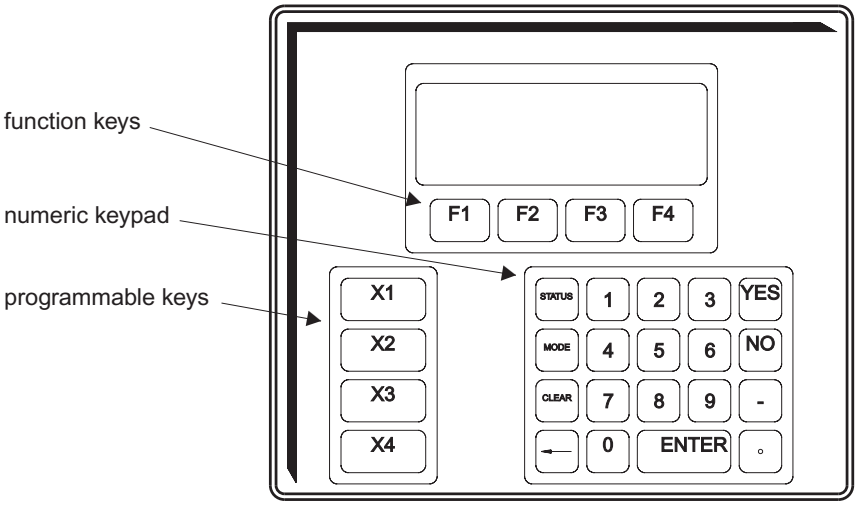

Transformers

Multi-tap single phase and three phase isolation transformers are available in a variety of power ratings for line voltage matching. Refer to Transformers on page B-5.

Auxiliary Power Supply Module (PSM)

An auxiliary power supply module (PSM-AUX) is available to supply DC power to the logic supplies of up to four ULTRA Plus PDMs (if the PSMs are OFF). The PSM-AUX uses single phase 115 VAC power as the input. This option is only necessary for the 1398-PDM -25, 50, 100, and 150 with the separate power supply module. The remaining ULTRA Plus PDMs have an integral power supply.

The PSM-AUX option is useful if ULTRA Plus PDM logic power is needed to stay ON, even when the motor supply (the PSM) is off. Absolute positioning is one example of when the PSM-AUX would be useful, since position information is maintained as long as logic power is on. Another example would be maintaining ULTRA Plus PDM logic power so the serial interface could be used for troubleshooting and diagnostics. Refer to PSM-AUX Outline and Connection Diagram on page 2-15 for additional information on installing the PSM-AUX and optional PSM-AUX isolation transformer. See a listing of Refer to Power Supply Modules on page B-2.

Cables

Motor power cables with connectors are available in four standard lengths 3, 7, 15 and 23 meters (10, 25, 50, and 75 ft.). Motor encoder cables with connectors and fifteen pin “D” connectors are available in the four standard lengths. Nine pin serial cables are available in 3 and 7 meter (10 ft. and 25 ft.) lengths. Refer to Cables on page B-4.

Motor Connectors

Mating connectors are available if you choose to build your own motor cables. Refer to Motor Connectors on page B-6.

Shunt Kits

The 1398-PDM-10, 20, 75, and 150B has a built-in shunt regulator. If the application requires a higher continuous power dissipation, the ULTRA Plus PDM provides easy access for an external shunt connection. Factory available External Shunt Kit (25Ω 200W) or an External Shunt Kit (18Ω 900W) can be used. These external shunts can be arranged to provide maximum power dissipation as long as the minimum resistance requirement is met. Refer to PDMs and Optional Accessories on page B-1

Personal Computer (PC)

A user-supplied PC is required to run GML Ultra Software. The minimum computer requirements to run this software are contained in the GML Ultra Software manuals.

Install the ULTRA Plus PDM Components

This chapter explains the physical installation of the individual components associated with an ULTRA Plus PDM system.

Prior to installation of the ULTRA Plus PDM system, verify that all the necessary components are available. Each axis of motion requires an ULTRA Plus PDM and a motor. If 1398-PDM-25, 50, 100, and 150 is used, there must be at least one power supply module for the system.

ATTENTION

Observe all applicable local, national, and international safety codes when using this equipment.

Wiring practices, grounding, disconnects, and over-current protection are of particular importance.

Failure to observe safety codes could result in personal injury or damage to equipment.

Mounting

Before mounting the PDM, you should install any option cards, Personality Modules, and system firmware. Other operations such as removing jumpers on the logic board should also be performed before mounting the system.

ATTENTION

During installation, protect equipment from metal chips, weld splatters and other debris.

Complete all drilling, cutting, welding, etc., before mounting the equipment.

Failure to observe this precaution could result in damage to or destruction of the equipment.

Environment

The ULTRA Plus PDM and power supply modules are designed for simple installation on a flat surface such as the back wall or plate of an enclosure. They must be enclosed in a grounded metal enclosure offering protection as defined in standard EN 60529 (IEC 529) to at least IP54 such that they are not accessible to an operator or unskilled person. NEMA 12 enclosure exceeds these requirements providing protection to IP65. The environment in the enclosure must be clean and free of oil mist, coolant mist, conductive particles, water, and corrosive chemicals. The enclosure must also be properly sized (and ventilated if required) to ensure that the required operating temperature of the ULTRA Plus PDM is not exceeded. Refer to "Specifications" on page A-1.

Ventilation

The maximum power losses are shown below to help in sizing an enclosure and any required ventilation. Typical heat losses can run approximately one-half maximum power losses.

Maximum power losses for help in sizing enclosures

Model	Maximum Loss (Watts)
1398-PDM-10	50 + dissipative shunt
1398-PDM-20	100 + dissipative shunt
1398-PDM-25	200
1398-PDM-30	150 + dissipative shunt
1398-PDM-50	180
1398-PDM-75	300 + dissipative shunt
1398-PDM-100	275
1398-PDM-150	300
1398-PDM-150B	500 + dissipative shunt
1398-PSM-50	110 + dissipative shunt
1398-PSM-125	240 + dissipative shunt
Operator Terminal	25
3.0 kVA Transformer	350
TF-03 (3 kW transformer)	350
TF-06 (6 kW transformer)	600
TF-18 (18 kW transformer)	1200

As an additional aid in sizing an enclosure, with no active method of heat dissipation, the following approximate equation is used:

$$T = 4.08\left(\frac{Q}{A}\right) + 1.1$$

Where T is temperature difference between inside air and outside ambient (°F), Q is heat generated in enclosure (Watts), and A is enclosure surface area (ft^2).

The exterior surface of all six sides of an enclosure is calculated as

$$A = \frac{(2dw + 2dh + 2wh)}{144}$$

Where d (depth), w (width), and h (height) are in inches.

Transformer Sizing

ULTRA Plus PDM systems do not require isolation transformers. A transformer may be required, however, to match the voltage requirements of the controller to the available service. To size a transformer for a ULTRA Plus PDM, the power output (KVA) of each axis must be known. This can be derived by calculating the horsepower for each axis and converting that horsepower into units f watts. If you are suppling power to more than one motor and PDM, simply add the KW ratings together from each calculation to get a system KW total.

Definitions:

KW = power or "real power"
KVA = apparent power

Transformer KVA rating = (Sum of average output power of each axis) x 2.0

IMPORTANT Calculations are multiplied by a factor to compensate for the power and loss elements within a power system. A factor of 2.0 is used with a single phase system and a factor of 1.5 is used with a three phase system. This factor should minimize the effects of the secondary line voltage sagging in the transformer during peak current periods.

$$KVA = \frac{Speed(RPM) \times Torque(lb-in)}{63,025} \times \frac{746 Watts}{HP} \times \frac{KVA}{1000 Watts} \times 2.0$$

IMPORTANT If you are using the Rockwell Automation/Allen-Bradley system sizing program, the average speed and average torque data has already been calculated and can be used in the above equation. If you are not sure of the exact speed and torque in your application, another approach is to look at the speed/torque curve for your PDM/motor combination and use the values for the worst case continuous speed and torque.

Sizing a transformer with an 1398 PDM-30 and H-4075 motor:

IMPORTANT The speed/torque curve information is based upon a PDM module input voltage of 230 VAC. For a 115 VAC input voltage, the maximum speed is reduced by half.

$$KVA = \frac{3000RPM \times 75lb-in}{63,025} \times \frac{746Watts}{HP} \times \frac{KVA}{1000Watts} \times 2.0$$

Transformer Size = 5.3KVA

Figure 2.1
Single PhaseTransformer Load Regulation Curve

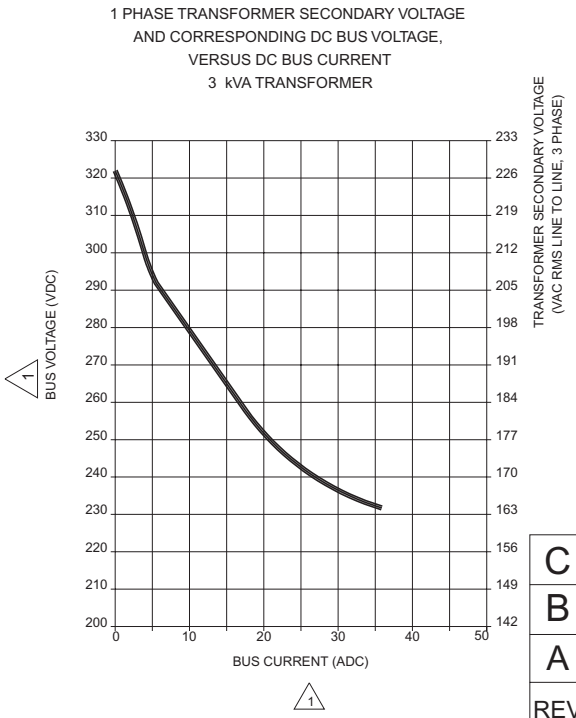

RELIANCE MOTION CONTROL 1 PHASE TRANSFORMER	
PART NUMBER	kVA
0020-5097	3

NOTES:

1. DC BUS VOLTAGE AND CURRENT IS MEASURED AT MOTOR POWER CIRCUITS INTERNAL TO THE DRIVE MODULE (NOT ACCESSIBLE TO THE USER).

2. CURVE SHOWS REDUCTION IN TRANSFORMER SECONDARY VOLTAGE AND DRIVE MODULE INTERNAL DC BUS VOLTAGE, DUE TO TRANSFORMER INTERNAL LOSSES, AS BUS CURRENT LOAD INCREASES.

3. ALL DATA TAKEN WITH TRANSFORMER PRIMARY VOLTAGE HELD TO 230 VAC 1 PHASE LINE TO LINE 60 Hz AND WITH SECONDARY WIRED FOR 230 VAC LINE TO LINE NO LOAD.

REV	ECO	BY	REVISION DESCRIPTION	DATE	CHKR
C	20625	JL	UPDATE TITLE BLOCK	––	––
B	19960	BC	PDM UPDATE	2-19-92	BC
A	19866	BC	RELEASED	11-22-91	JH

UNLESS OTHERWISE SPECIFIED
DO NOT SCALE DRAWING
DIMENSIONS ARE IN INCHES
BREAK ALL EDGES .02 MAX
FILLETS AND ROUNDS .02 R MAX
TOLERANCE ON:
ANGLES ±1ANGLES °
FRACTIONS:±1/64"
DECIMALS.XX±.020
.XXX±.010

DRAWN BY	DATE	DESIGN ENGR	DATE
BC	11-22-91	JH	11-22-91

DIAG, XFMR LOAD REG

PART NO. 9101-1057

SCALE	DWG SIZE	SHEET
1:1	A	1 of 1

Figure 2.2
Three PhaseTransformer Load Regulation Curves

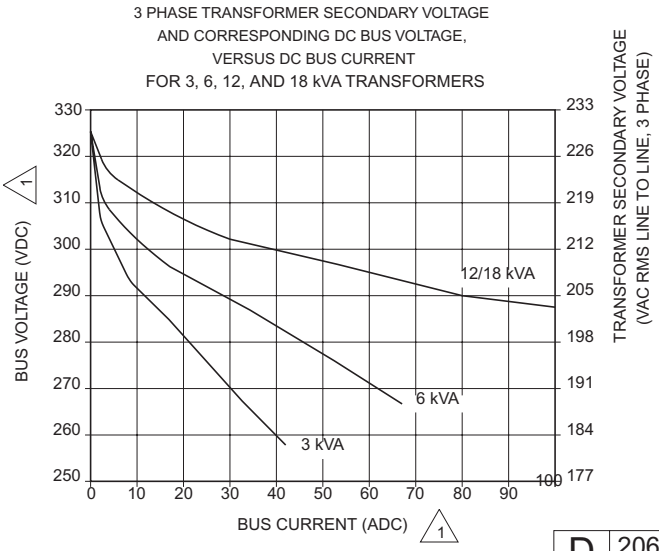

RELIANCE MOTION CONTROL 3 PHASE TRANSFORMERS	
PART NUMBER	kVA
0020-5091-001	3
0020-5091-002	6
0020-5091-003	12
0020-5091-004	18

NOTES:

1. DC BUS VOLTAGE AND CURRENT IS MEASURED AT POS & NEG OUTPUT TERMINALS OF THE POWER SUPPLY MODULE.

2. CURVES SHOW REDUCTION IN TRANSFORMER SECONDARY VOLTAGE AND THE DRIVE MODULE DC BUS VOLTAGE, DUE TO TRANSFORMER INTERNAL LOSSES, AS BUS CURRENT LOAD INCREASES.

3. ALL DATA TAKEN WITH TRANSFORMER PRIMARY VOLTAGE HELD TO 480 VAC 3 PHASE LINE TO LINE 60 Hz AND WITH SECONDARY WIRED FOR 230 VAC LINE TO LINE NO LOAD.

REV	ECO	BY	REVISION DESCRIPTION	DATE	CHKR
D	20625	JL	UPDATE TITLE BLOCK	––	––
B-C	B-19866,C-19960				
A	16383	BC	RELEASED	8-5-88	JH

UNLESS OTHERWISE SPECIFIED
DO NOT SCALE DRAWING
DIMENSIONS ARE IN INCHES
BREAK ALL EDGES .02 MAX
FILLETS AND ROUNDS .02 R MAX
TOLERANCE ON:
ANGLES ±1ANGLES °
FRACTIONS:±1/64"
DECIMALS.XX±.020
.XXX±.010

DRAWN BY	DATE	DESIGN ENGR	DATE
BC	8-5-88	JH	8-5-88

DIAG, XFMR LOAD REG

PART NO. 9101-0132

SCALE	DWG SIZE	SHEET
1:1	A	1 of 1

Figure 2.3
Single PhaseTransformer Outline Diagram

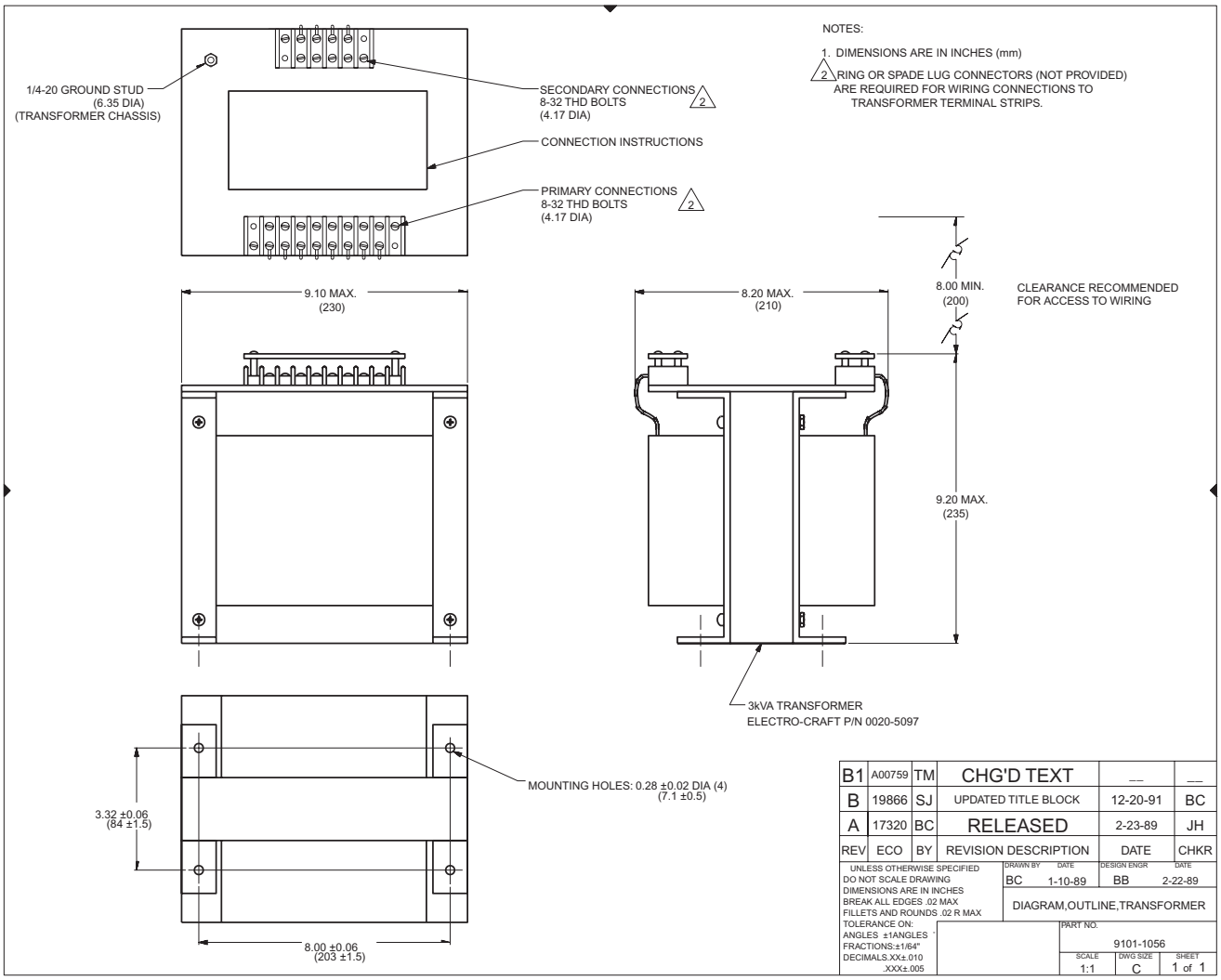

Figure 2.4
Three Phase Transformer Outline Diagram

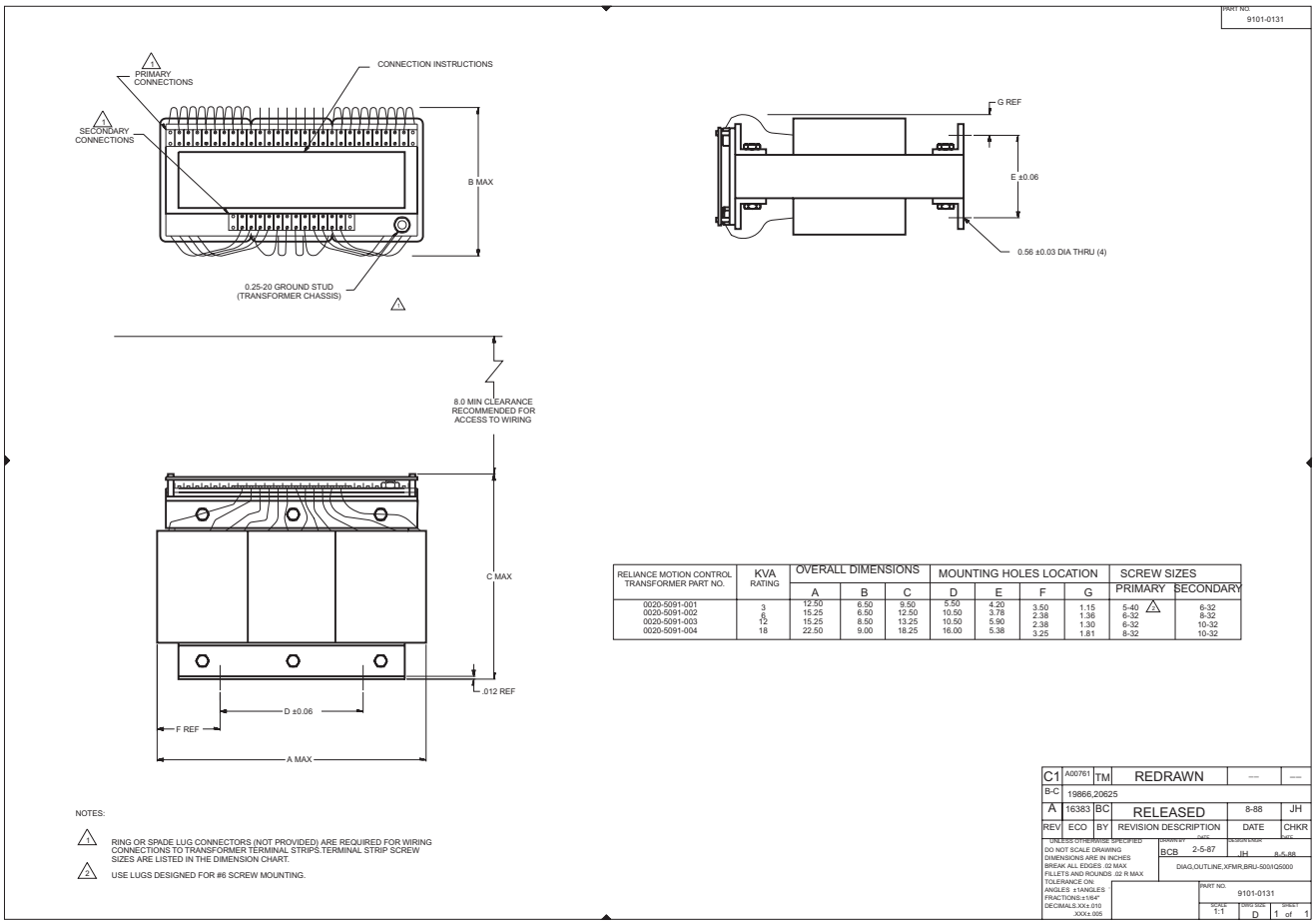

RELIANCE MOTION CONTROL TRANSFORMER PART NO.	KVA RATING	OVERALL DIMENSIONS			MOUNTING HOLES LOCATION				SCREW SIZES	
		A	B	C	D	E	F	G	PRIMARY	SECONDARY
0020-5091-001	3	12.50	6.50	9.50	5.50	4.20	3.50	1.15	5-40 △2	6-32
0020-5091-002	6	15.25	6.50	12.50	10.50	3.78	2.38	1.36	6-32	8-32
0020-5091-003	12	15.25	8.50	13.25	10.50	5.90	2.38	1.30	6-32	10-32
0020-5091-004	18	22.50	9.00	18.25	16.00	5.38	3.25	1.81	8-32	10-32

Mounting Requirements

Position the ULTRA Plus PDM in a vertical position on a flat, solid surface that meets the mounting requirements for weight, humidity, and temperature listed in Appendix A. The following diagrams list dimensional mounting requirements.

Figure 2.5
1398-PDM-10, 20 and 30 Mounting

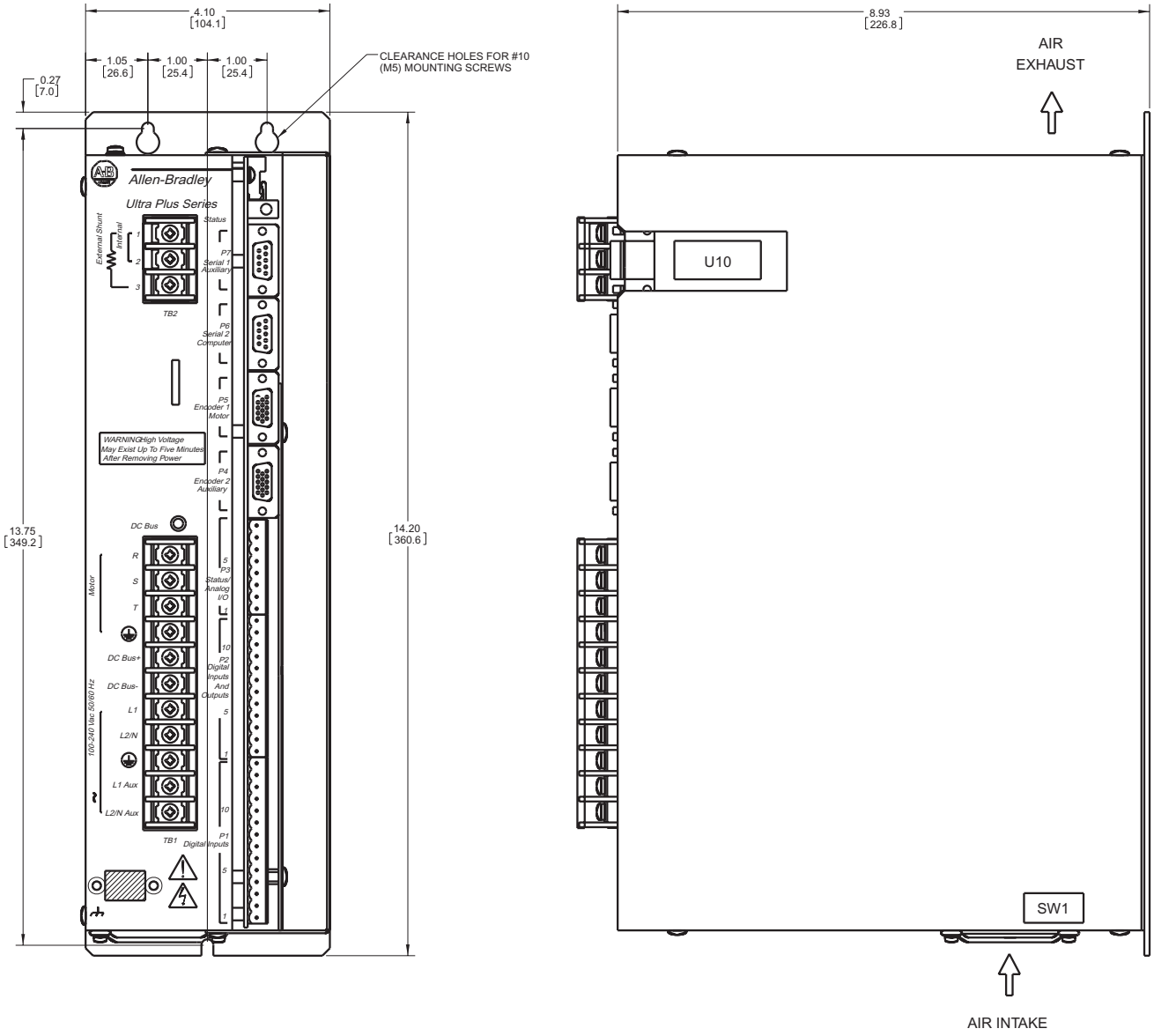

Figure 2.6
1398-PDM-75 Mounting

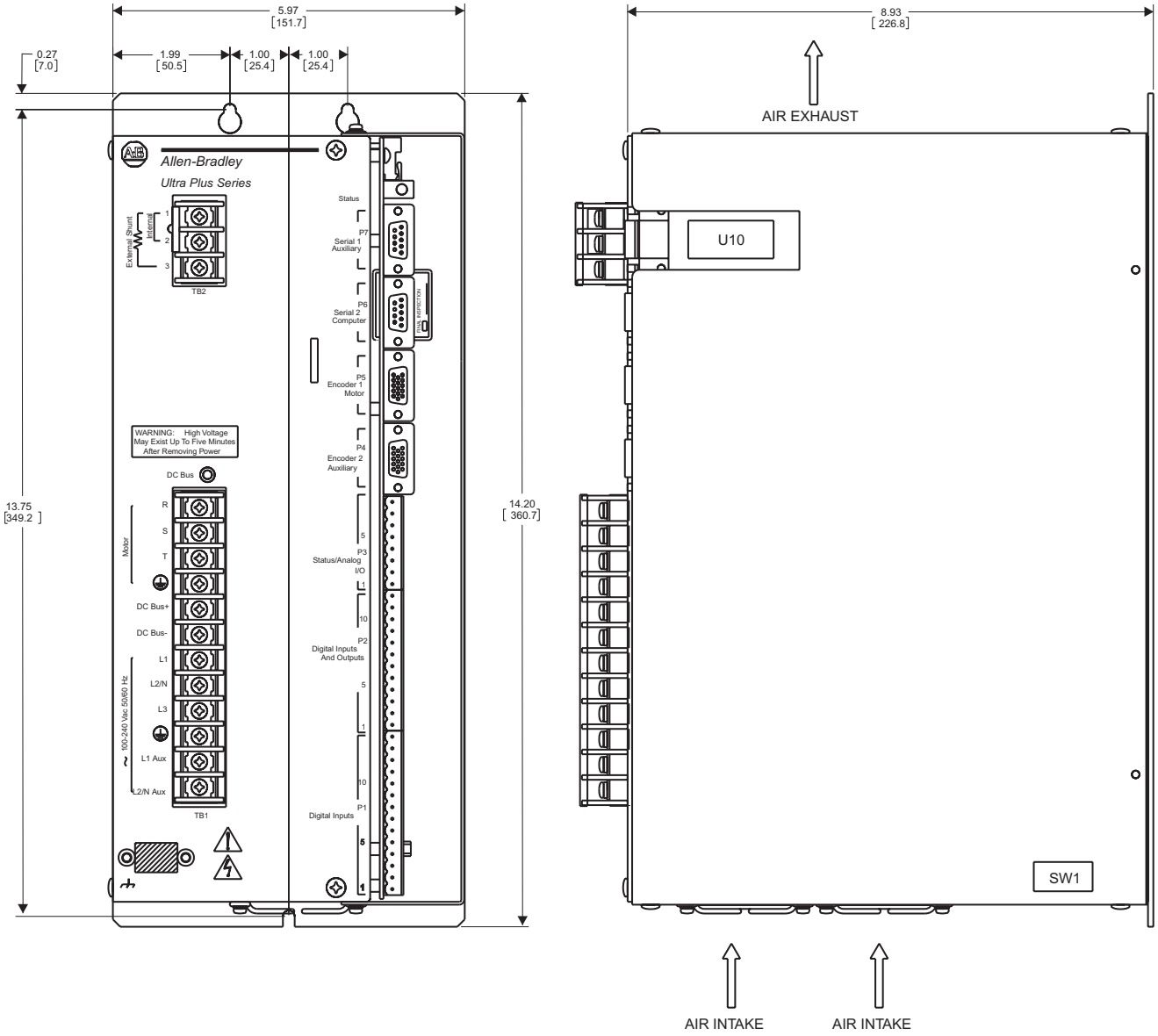

Figure 2.7
1398-PDM-25, 50, 100, and 150 Mounting

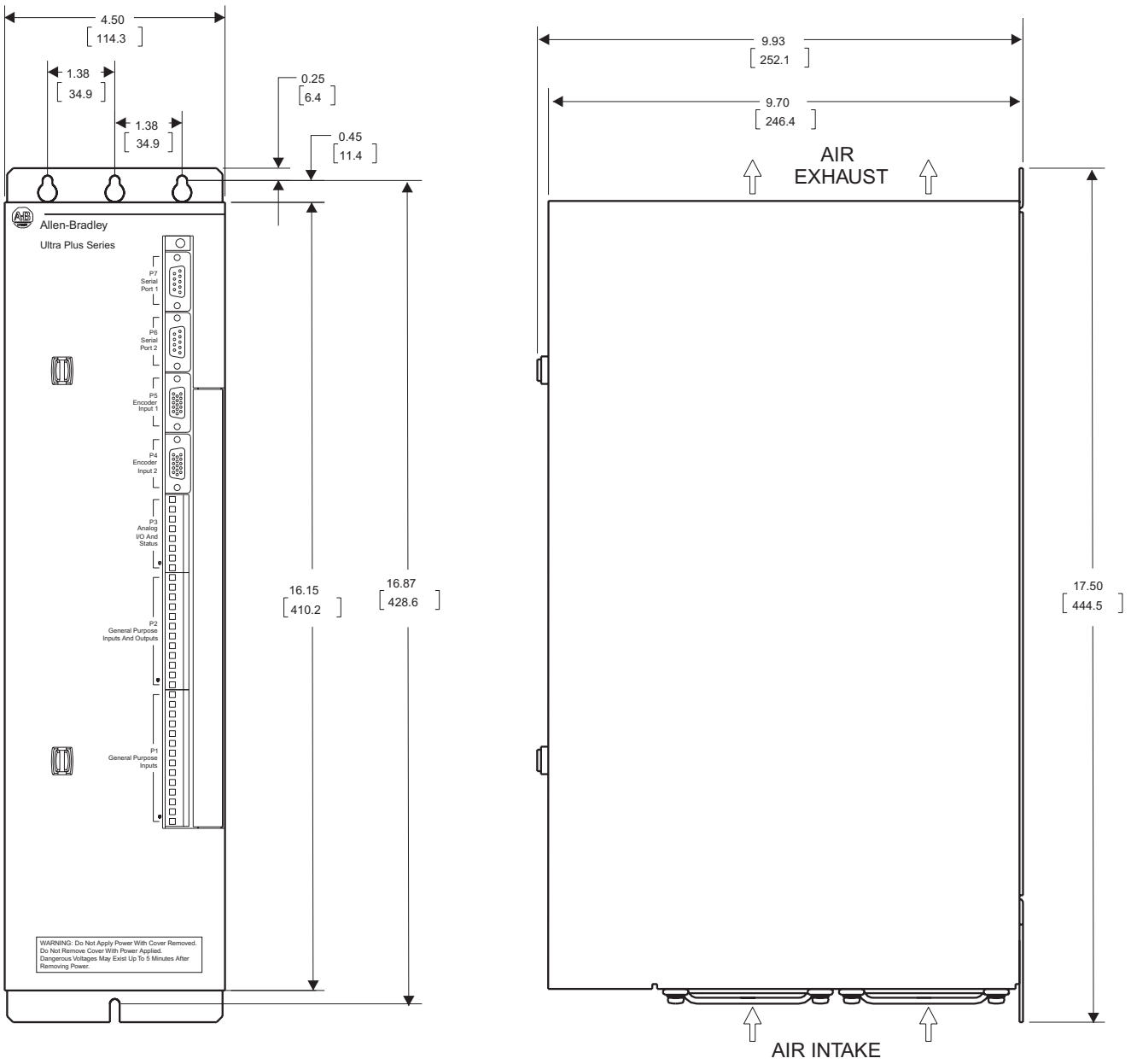

Figure 2.8
1398-PDM-150B Mounting

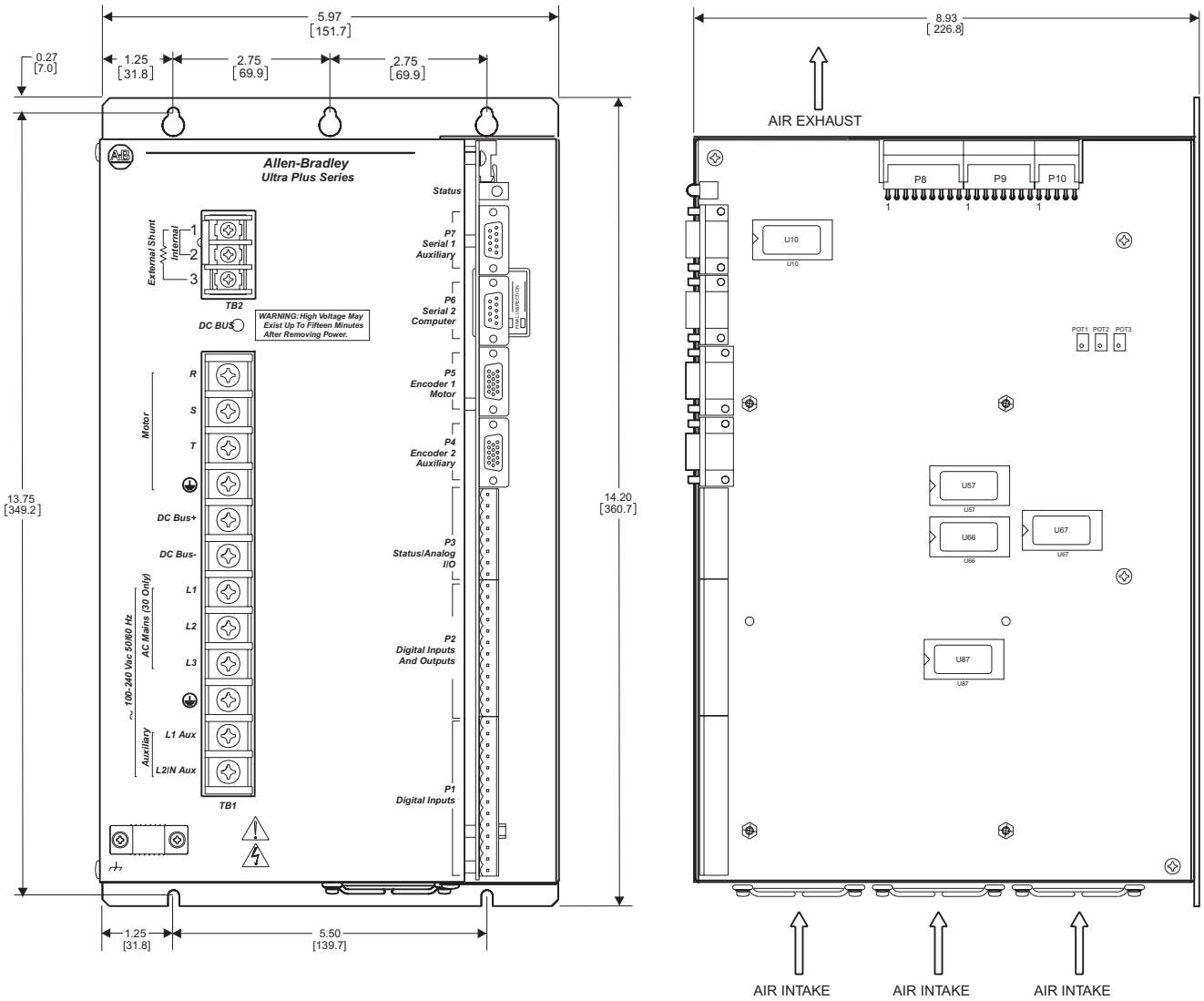

1398-PDM-25, 50, 100, and 150 Power Supply Module

The power supply module should be centrally located to minimize the distance between it and the PDM modules. The higher current rating PDM modules should be located closest to the power supply module.

PSM Auxiliary Transformers

Figure 2.9 shows the mounting diagram and connections for the PSM Auxiliary Transformer.

Figure 2.9
PSM Auxiliary Transformer mounting

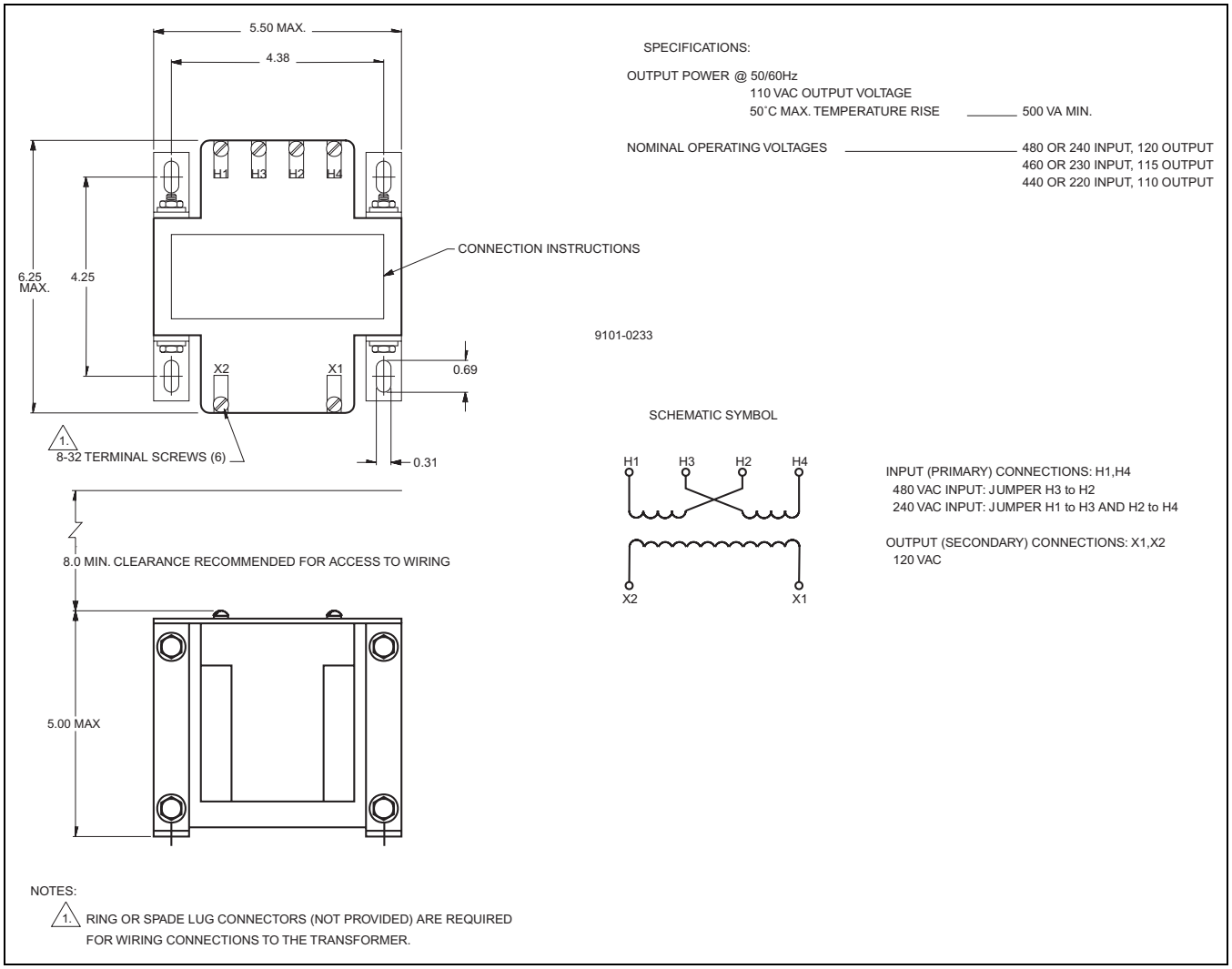

Figure 2.10
PSM-AUX Outline and Connection Diagram

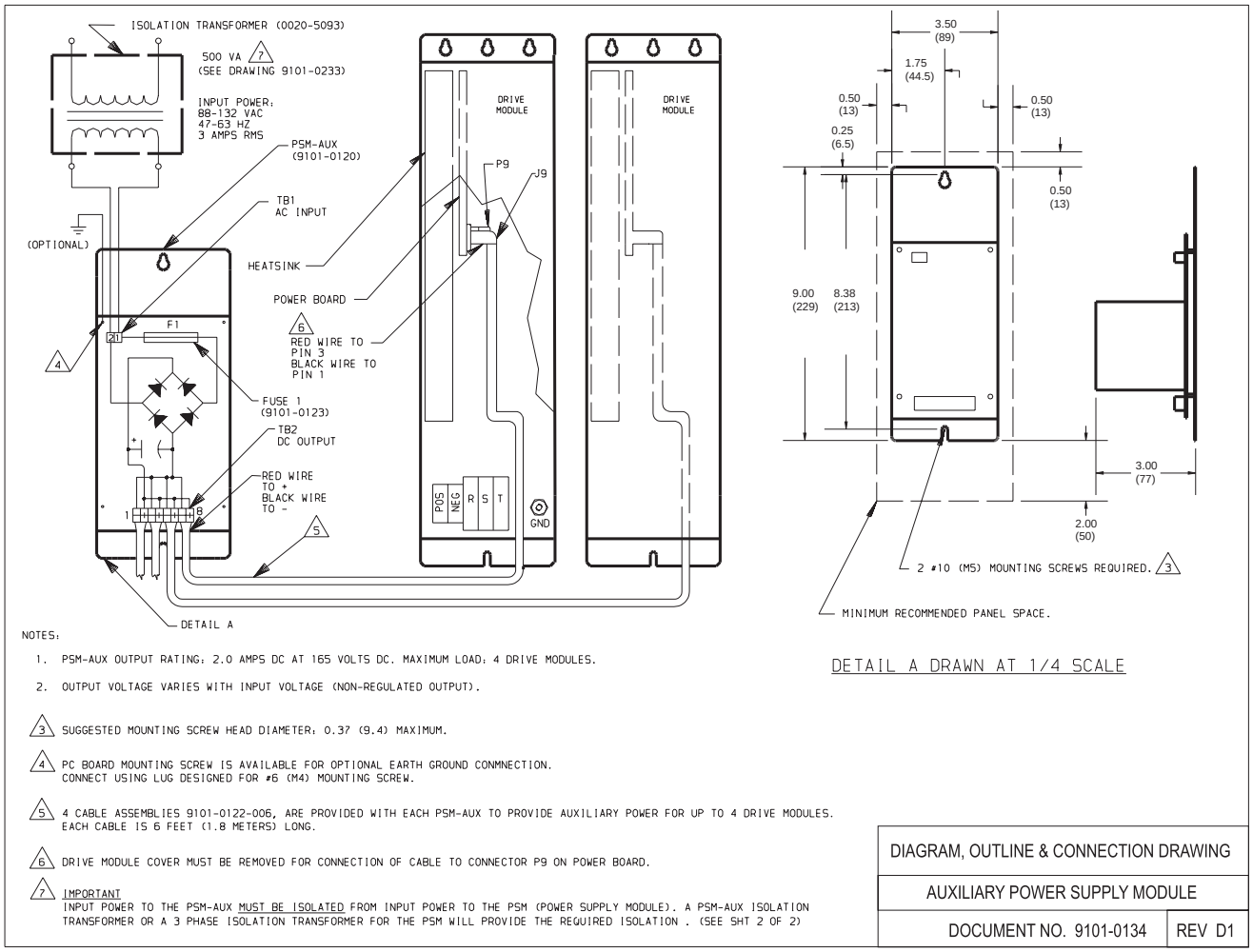

NOTES:

1. PSM-AUX OUTPUT RATING: 2.0 AMPS DC AT 165 VOLTS DC. MAXIMUM LOAD: 4 DRIVE MODULES.
2. OUTPUT VOLTAGE VARIES WITH INPUT VOLTAGE (NON-REGULATED OUTPUT).

3 SUGGESTED MOUNTING SCREW HEAD DIAMETER: 0.37 (9.4) MAXIMUM.

4 PC BOARD MOUNTING SCREW IS AVAILABLE FOR OPTIONAL EARTH GROUND CONMNECTION. CONNECT USING LUG DESIGNED FOR #6 (M4) MOUNTING SCREW.

5 4 CABLE ASSEMBLIES 9101-0122-006, ARE PROVIDED WITH EACH PSM-AUX TO PROVIDE AUXILIARY POWER FOR UP TO 4 DRIVE MODULES. EACH CABLE IS 6 FEET (1.8 METERS) LONG.

6 DRIVE MODULE COVER MUST BE REMOVED FOR CONNECTION OF CABLE TO CONNECTOR P9 ON POWER BOARD.

7 IMPORTANT
INPUT POWER TO THE PSM-AUX MUST BE ISOLATED FROM INPUT POWER TO THE PSM (POWER SUPPLY MODULE). A PSM-AUX ISOLATION TRANSFORMER OR A 3 PHASE ISOLATION TRANSFORMER FOR THE PSM WILL PROVIDE THE REQUIRED ISOLATION . (SEE SHT 2 OF 2)

DIAGRAM, OUTLINE & CONNECTION DRAWING	
AUXILIARY POWER SUPPLY MODULE	
DOCUMENT NO. 9101-0134	REV D1

Motors

The installation and operation of motors should adhere to the following guidelines:

- Do *not* run motors that are not properly mounted. Attach all motor cables after motor is mounted.
- Mount motor with connectors pointing downward and use a drip loop to keep liquids flowing away from connectors.
- Consider motor case temperature if necessary to safeguard operator and maintenance staff. Maximum case temperature is approximately 100°C (212°F) for a motor used at continuous rating in a 40°C ambient temperature.

ATTENTION

Ensure all moving components are safe before energizing a system.

Equipment to be worked on should be appropriately identified and access to power restricted according to required lockout/tagout procedures. Motors and linkages must be securely attached before a system is made operational.

Failure to observe these safety procedures could result in personal injury and damage to equipment.

External Shunt

The following procedure outlines the installation of External Shunt, 200W (9101-1183) and External Shunt, 900W (9101-1697) units:

1. Remove jumper between terminals 1 and 2, at the internal shunt connection. The jumper is supplied with the amplifier.

2. Wire an external shunt resistor between terminals 1 and 3, at the external shunt connections. Use wire of the recommended wire size.

Figure 2.11
External Shunt (200W) mounting and connection diagram

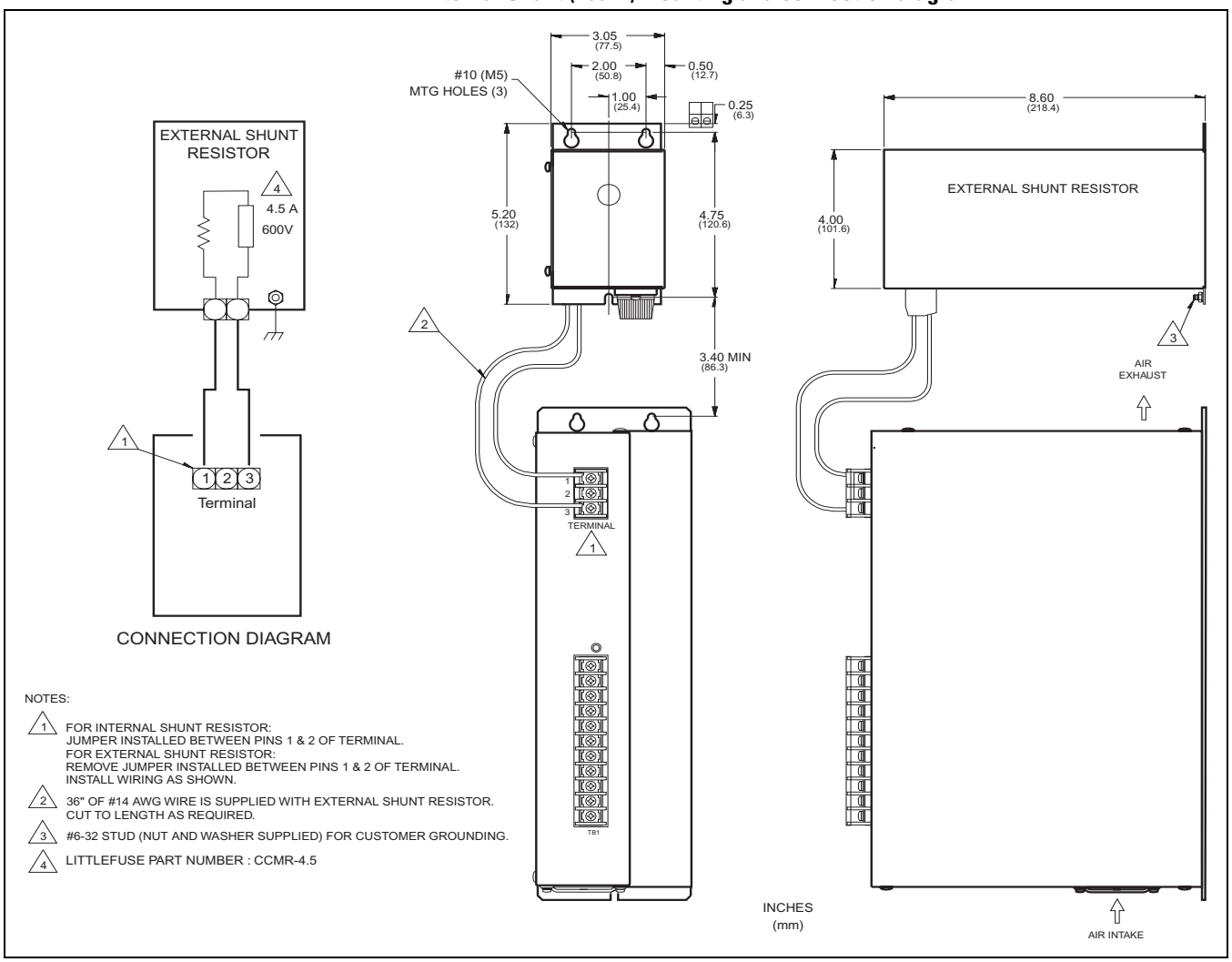

Figure 2.12
External Shunt (900W) mounting and connection diagram

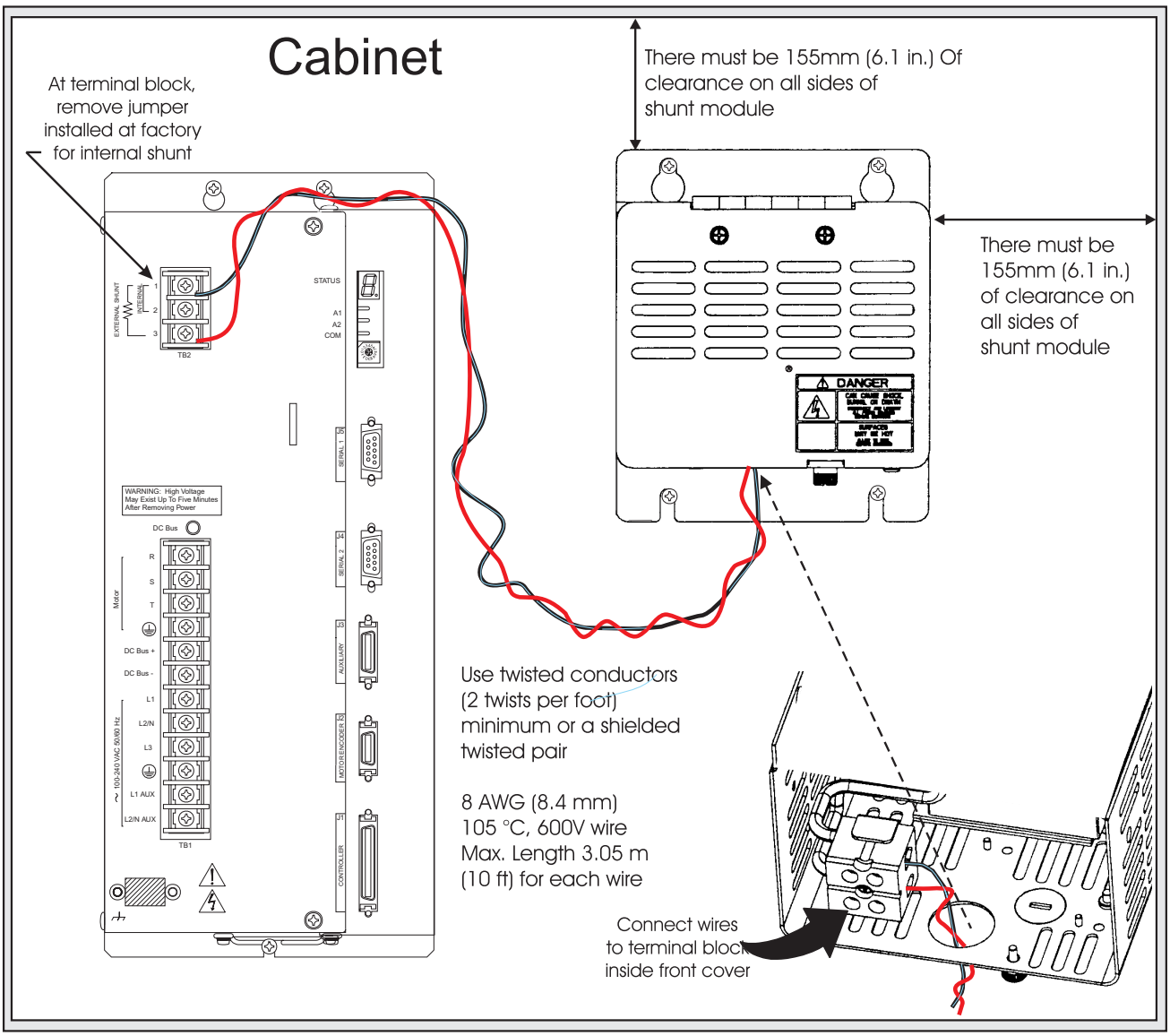

Operator Terminal

Figure 2.13 and Figure 2.14 on page 2-20 illustrate the dimensions of the two available Operator Terminals. All dimensions are in inches (mm). Allow fifty millimeters (two inches) clearance above and below the Operator Terminal for airflow, and 100 millimeters (four inches) clearance behind to allow for cable connectors.

Refer to "Specifications" on page A-1 for additional technical information.

Figure 2.13
Operator Terminal (1398-HMI-002) Dimensions

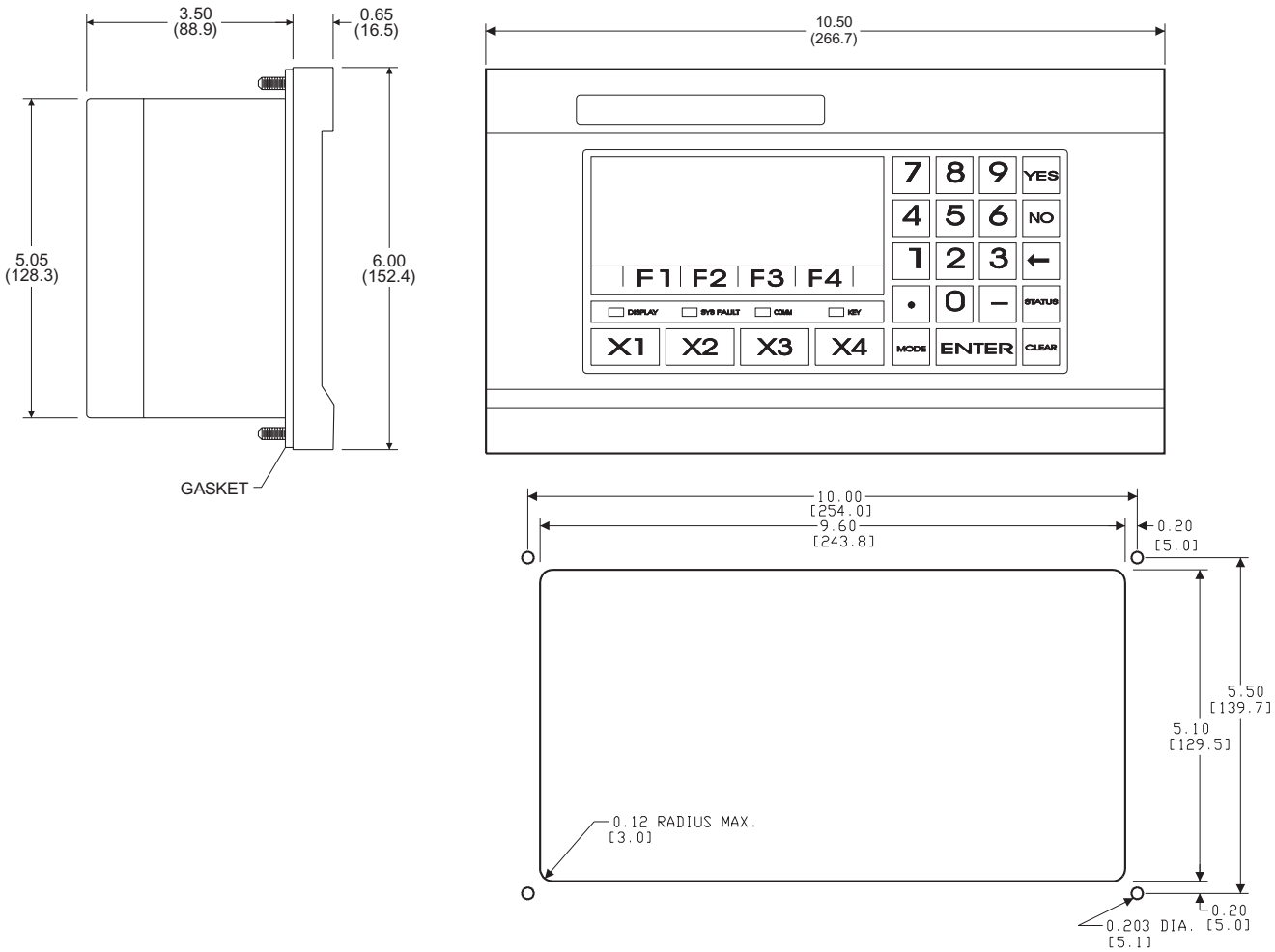

Figure 2.14
Operator Terminal (1398-HMI-003) Dimensions

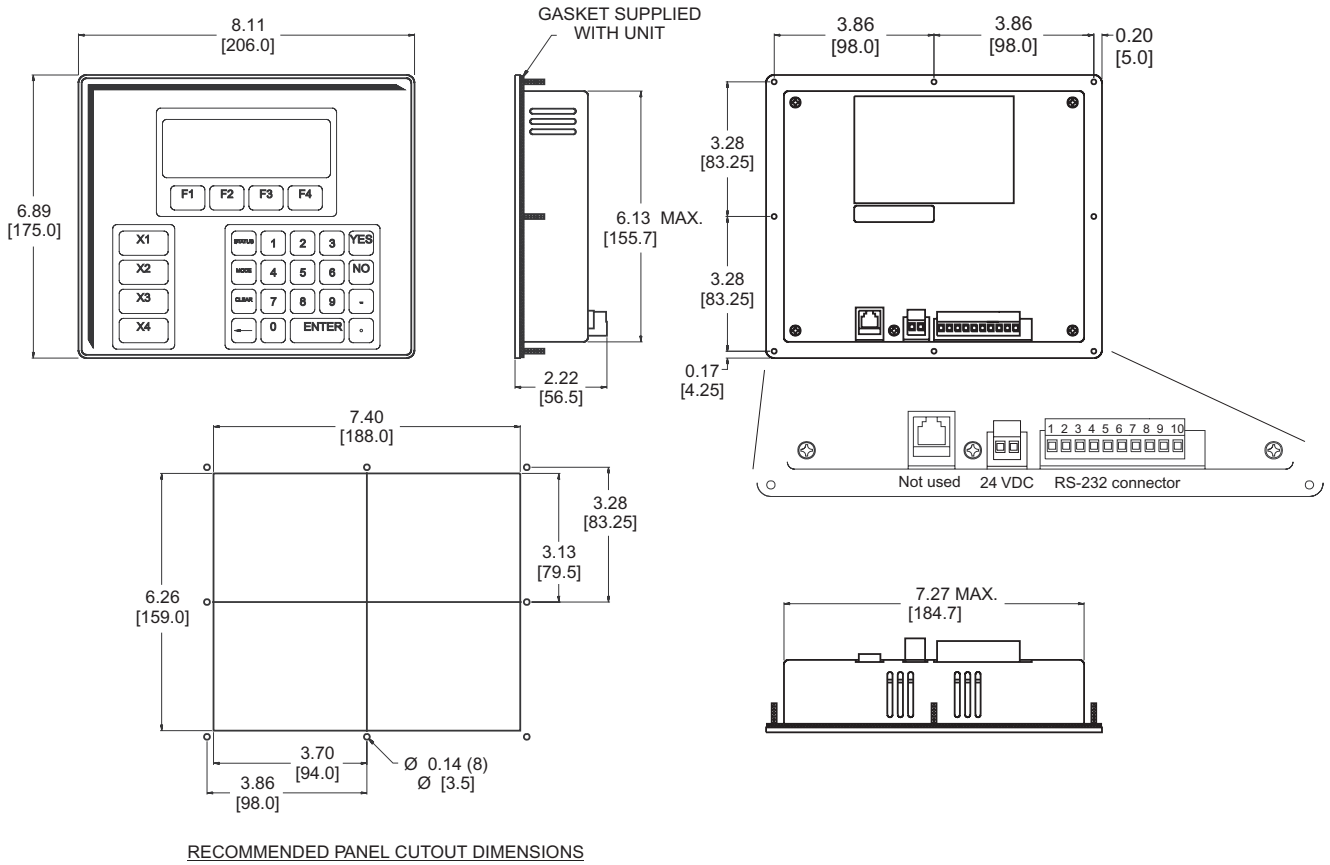

RECOMMENDED PANEL CUTOUT DIMENSIONS

I/F Conversion Card, 24VDC Sourcing

Figure 2.15 illustrates the dimensions of the I/F 24V Conversion Card and the DIN mounting panel. All dimensions are in millimeters (inches are approximate conversions). The conversion card must be mounted in the same enclosure as the ULTRA Plus PDM to comply with the EU LVD directive.

Figure 2.15
I/F 24 Volt Sourcing Conversion Card Mounting Dimensions

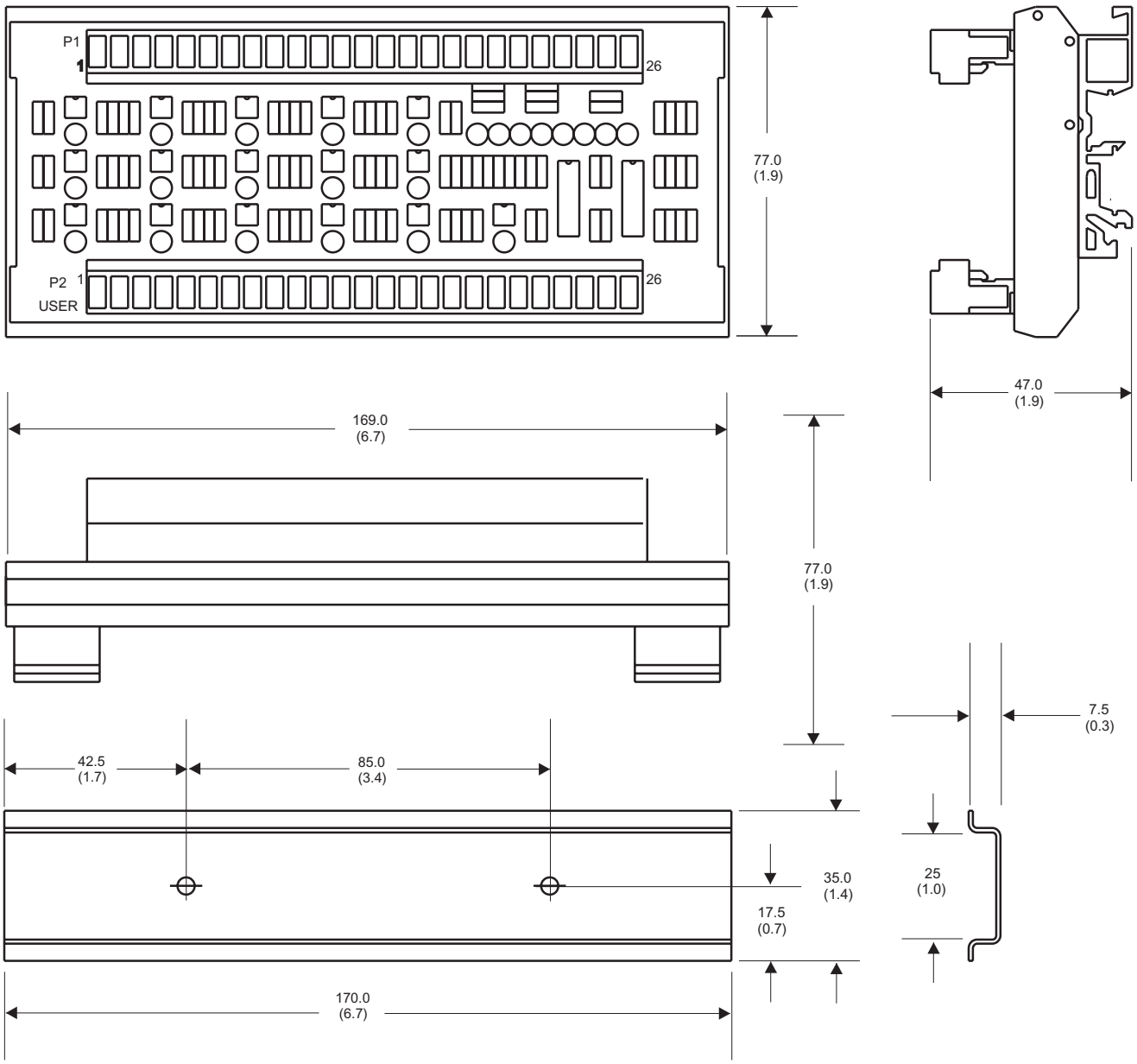

PDM Fusing Requirements

Fusing for the ULTRA Plus PDMs differs because of the separate power supply for some models.

Short Circuit Protection

In the United States, the National Electrical Code specifies that fuse selection must be based on the motor's Full Load Amperage (FLA), which is not to be confused with the PDM input current. The largest fuse allowed under any circumstances is four times the motor's FLA. Therefore the largest fuses permissible for use are four times the motor's FLA (marked on the motor) converted to a RMS value. The ULTRA Plus PDMs have been evaluated and listed by Underwriter Laboratories® Inc. according to UL 508C, with fuses sized as four times the continuous output current (FLA) of the PDM.

In almost all cases, fuses selected to match the PDM input current rating will meet the National Electrical Code requirements and provide the full PDM capabilities. Dual element, time delay fuses should be used to avoid nuisance trips during power initialization due to inrush current.

Solid state motor overload protection operates:

- within 8 minutes at 200% overload, and
- within 20 seconds at 600% overload.

1398-PDM-10, 20, 30, 75, and 150B

A short circuit current rating without fuse restrictions must be suitable for use on a circuit capable of delivering not more than 5000 RMS symmetrical Amperes, 240 Volts maximum.

A short circuit current rating with fuse restrictions must be suitable for use on a circuit capable of delivering not more than 200,000 RMS symmetrical Amperes, 240 Volts maximum, when protected by high interrupting capacity, current limiting fuses (Class CC, G, J, L, R, T).

1398-PDM-25, 50, 100, and 150

A short circuit current rating suitable for use on a circuit capable of delivering not more than 5,000 RMS symmetrical Amperes, 240 Volts maximum, when protected by:

- 1398-PSM-50: class R fuses rated 40A, and
- 1398-PSM-125: class R fuses rated 90A.

Refer to "Power Supply Modules" on page B-2 for product numbers.

Personality Module Installation

The Personality Module is already installed on the ULTRA Plus PDM. The following procedure is to be used if the Personality Module needs to be changed for machine servicing. Refer to Figure 2.16 for the location of the Personality Module on the ULTRA Plus PDM logic board.

Figure 2.16
Location of Personality Module

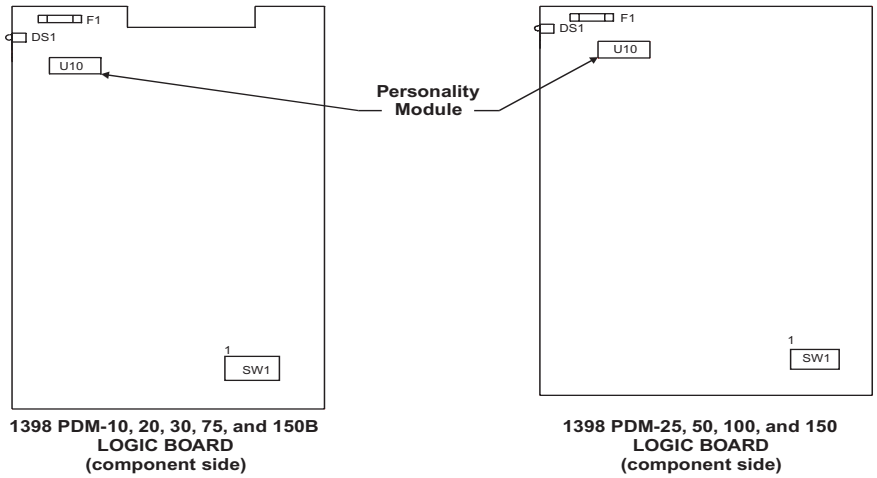

Installing the Personality Module (PM)

ATTENTION

Stray electrical discharge can damage the personality module.

Turn power Off, dissipate any stored electrical energy, and wear a conductive wrist strap while handling the Personality Module.

Failure to observe this safety procedure could result in damage to the equipment.

1. Check that power to the ULTRA Plus PDM is OFF.

   1398-PDM-10, 20, 30, 75, and 150B:
   Measure voltage between ULTRA Plus PDM terminals marked L1 and L2/N (L1, L2/N and L3 for ULTRA Plus PDM-75) to ensure incoming power is OFF. Also measure voltage between terminals marked L1 AUX and L2/N AUX, if used, to ensure power is OFF. The green DC BUS LED and the bicolor STATUS LED should be OFF.

1398-PDM-25, 50, 100, and 150:
Measure voltages at Positive and Negative bus terminals to ensure incoming power is OFF. If a PSM-AUX is used, measure the voltage at L1 and L2 of the PSM-AUX to ensure that incoming power is OFF.

2. Remove the ULTRA Plus PDM cover (1398-PDM-25, 50, 100, and 150 only).

3. Install Personality Module on ULTRA Plus PDM logic board in socket at location U10. The end of the Personality Module (PM) with the colored label must be toward the front of the ULTRA Plus PDM. If there is a colored label on the logic board, the PM label will be next to it and the colors should match.

4. Install the ULTRA Plus PDM cover (if removed).

IMPORTANT The Personality Module is programmed with standard factory default settings. If replacing a previously installed Personality Module, user programs and user selected parameters must be re-entered into the new Personality Module memory using GML Ultra Software.

System Firmware Installation

All ULTRA Plus PDMs come with the system firmware installed. Therefore, unless you are upgrading your ULTRA Plus PDM to a newer version of firmware, you will not need to install system firmware. Refer to Figure 2.17 for system firmware location.

Figure 2.17
Location of system firmware

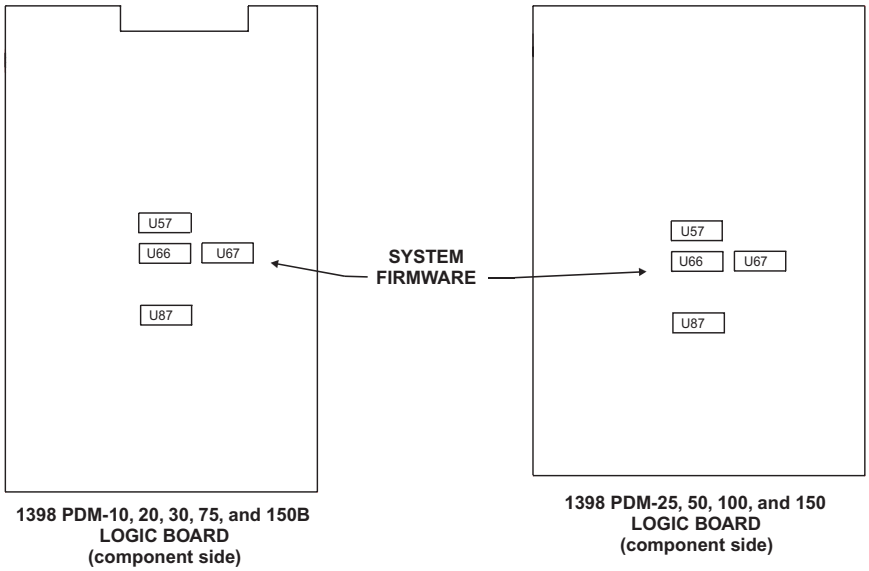

Installing the Firmware EPROMs

ATTENTION

Stray electrical discharge can damage the Firmware EPROMs.

Turn power Off, dissipate any stored electrical energy, and wear a conductive wrist strap while handling the Personality Module.

Failure to observe this safety procedure could result in damage to the equipment.

1. Check that power to the ULTRA Plus PDM is OFF.

   1398-PDM-10, 20, 30, 75, and 150B:
   Measure voltage between ULTRA Plus PDM terminals marked L1 and L2/N (and L3 on 1398 PDM-75, and 150B) to ensure incoming power is OFF. Also measure voltage between terminals marked L1 AUX and L2/N AUX if used, to ensure power is OFF. The green DC BUS LED and the bicolor STATUS LED should be OFF.

   1398-PDM-25, 50, 100, and 150:
   Measure voltages at Positive and Negative bus terminals to ensure incoming power is OFF. If a PSM-AUX is used, measure the voltage at L1 and L2 of the PSM-AUX to ensure that incoming power is OFF

2. Remove the ULTRA Plus PDM cover (1398-PDM-25, 50, 100, and 150 only).

3. Install the four EPROMs on the ULTRA Plus PDM logic board in sockets U57, U66, U67, and U87. The end of the EPROM with the notch must be toward the front of the ULTRA Plus PDM.

4. Install the ULTRA Plus PDM cover (if removed).

Jumper and DIP Switches

Jumpers W3 and W4 may be removed if an external 24 VDC power supply is used. Removing these jumpers will disconnect the internal supply. The jumpers do not need to be removed if only the 24V common (P1 pin 1) is connected to machine common, but *must* be removed if an external +24VDC supply is connected to P2 pin 12.

Dip switch SW1 sets the address when multiple ULTRA Plus PDMs are connected in multi-drop serial communications mode, and sets the mode of operation for the Operator Terminal, Serial 1 Auxilary (P7). Refer to "Networking" on page 3-44 for more information.

Refer to “Location of jumper and DIP switch” on page 2-27 for the locations of jumpers W3, W4, and dip switch SW1 on the ULTRA Plus PDM logic board.

Figure 2.18
Location of jumper and DIP switch

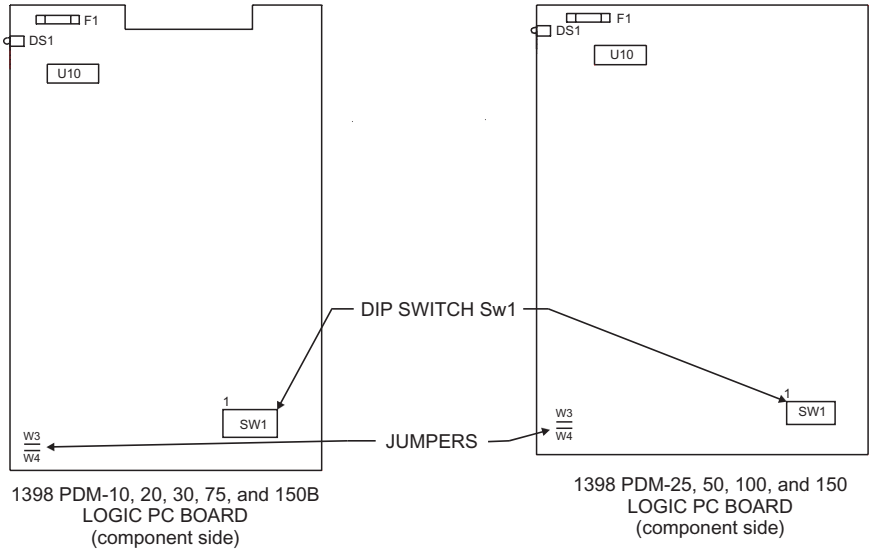

Regulatory Requirements

These guidelines discuss ways to minimize noise problems. However, equipment EMC performance must meet regulatory requirements in various parts of the world, specifically the European Union. Ultimately, it is the responsibility of the machine builder to ensure that the machine meets the appropriate requirements as stated.

The following installation requirements are for compliance to the Low Voltage Directive (LVD) and the Electromagnetic Compatibility (EMC) Directive for ULTRA Plus PDMs. The information below is based on successful testing using the specified installation methods.

Electromagnetic Compatibility Directive

It is impossible to guarantee a specific ULTRA Plus PDM installation will meet the EMC requirements without testing. The 1398-PDM-10, 20, 30, 75, and 150B installed as described below should be compliant with European EMC requirements. The 1398-PDM-25, 50, 100, and 150 are not CE compliant.

Figure 2.19
Recommended installation for EMC

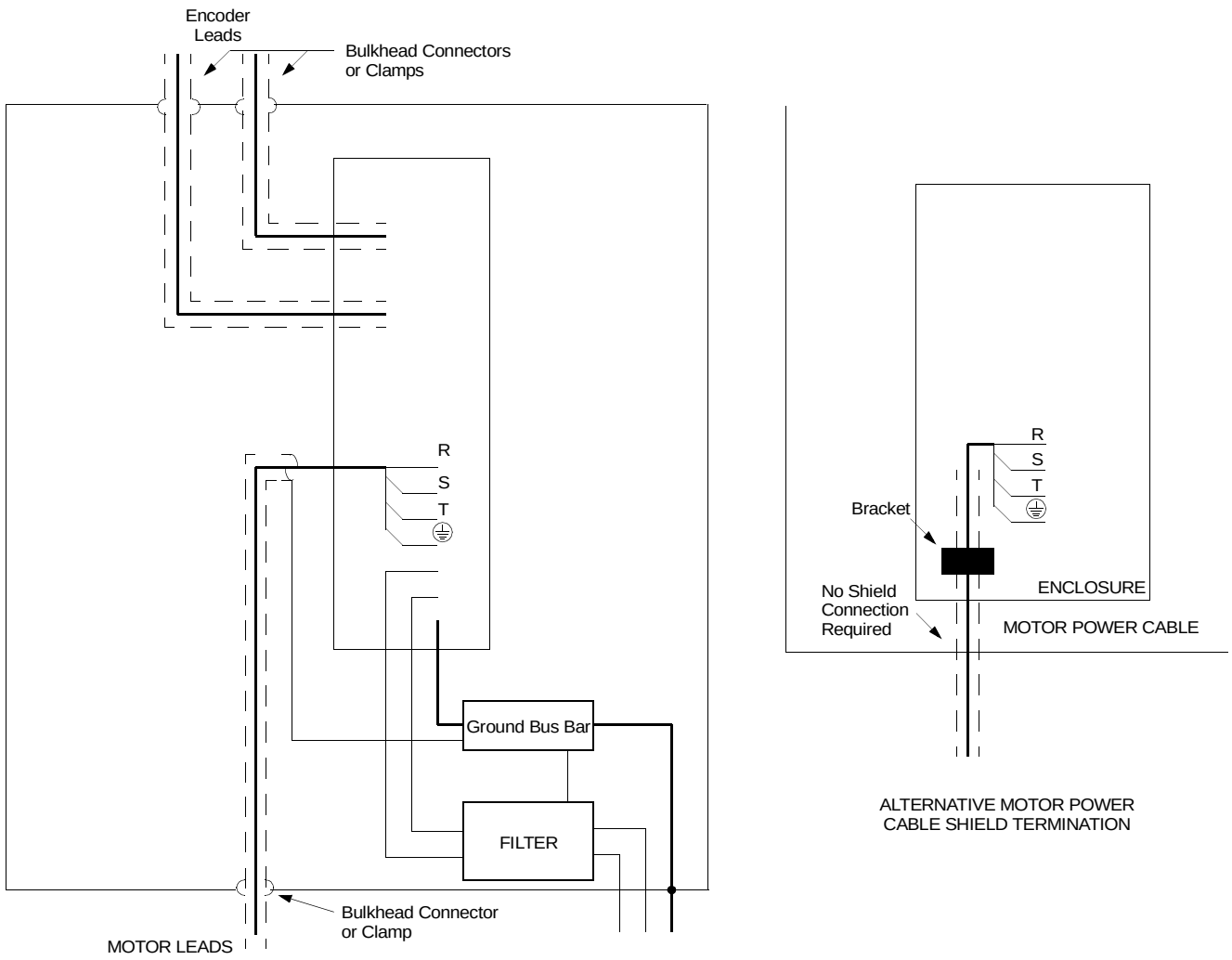

Important points are:

- Cable shields must be bonded to the enclosure at all entry points in one of two ways. A mating bulkhead connector can be mounted on the enclosure, or the cable jacket may be removed so that the shield can be clamped to the enclosure. The motor power cable shield may be terminated to the PDM chassis on those drives that have the motor power cable bracket supplied with them. In this case the motor power cable shield does not have to be terminated to the enclosure.
- The lead length between the PDM and filter does not need to be shielded, but it should be as short as possible. All other cables must be shielded, with the shields terminated at both ends. If ground loops are an issue, the shield can be capacitively terminated at one end.
- The PDM should be mounted in a grounded metal enclosure, an "EMI" enclosure is not required.
- Route the encoder feedback, serial communications and digital I/O cables separately from AC and motor power cabling.

One of the most important factors is the motor cable shield termination at the motor end. The shield must be terminated to the case of the motor through the connector backshell, or through a metal gland in the case of a motor with flying leads. If there are any intermediate connectors in any of the screened cables, the screen must connect through the backshells and not by routing a drain wire through a pin inside the connector. Use of a drain wire virtually guarantees failure to meet the EMC requirements!

The 1398-PDM-10, 20, 30, 75, and 150B have successfully passed all EMC tests but shows some sensitivity to radiated fields (10V/m) in the encoder feedback circuit when the serial lead is connected. Care must be taken in screening and grounding with both the serial lead and the motor feedback lead, or nuisance tripping may occur. The PDM end connector for these leads is a D-type, and screened backshells should be used with the screen properly terminated. There is no requirement for a transformer in this design, and a common mode choke for the motor leads is included in the PDM.

The PDM input current ratings and suitable supply filters (one filter per PDM) are listed below.

PDM current ratings and suitable supply filters

PDM	Current Rating	Schaffner	Roxburgh
1398-PDM-10	1ϕ 10 A	FN350-12-29	MDF16 or MIF10
1398-PDM-20	1ϕ 19 A	FN350-20-29	MDF18 or MIF23
1398-PDM-30	1ϕ 28 A	FN350-30-33	MDF36 or MIF32
1398-PDM-75	3ϕ 28 A	FN351-36-33	MDF336 or MIF330
1398-PDM-150B	3ϕ 50 A	---	MDF 350

Roxburgh filters may be ordered directly from Rockwell Automation in the United States or Europe. Part numbers and ratings are indicated below.

Roxburgh filters available directly from Rockwell Automation

Roxburgh	Current Rating	Rockwell - USA	Rockwell - Crewe
MDF18	1ϕ 18A	NONE	48-0428
MDF36	1ϕ 36A	9101-1387	48-0429
MDF336	3ϕ 36A	9101-1389	48-0430
MDF50[1]	1ϕ 50A	9101-1388	NONE
MDF350	3ϕ 50A	9101-1575	NONE
MDF370[1]	3ϕ 70A	9101-1390	NONE
MIF10	1ϕ 10A	9101-1517	NONE
MIF23	1ϕ 23A	9101-1518	NONE
1.MDF50 & MDF370 can be used for multiple PDMs			

A supply filter for the auxiliary supply is unnecessary, as a filter is included in the 1398-PDM-10, 20, 30, 75, and 150B.

ATTENTION

Shielded power cables must be grounded at a minimum of one point for safety.

Failure to observe this safety procedure could result in personal injury or damage to equipment.

Bonding Your System

Bonding is the practice of connecting metal chassis, assemblies, frames, shields and enclosures to reduce the effects of electromagnetic interference (EMI).

Unless specified, most paints are not conductive, and they act as insulators. To achieve a good bond between modules and the sub panel, surfaces need to be paint-free or plated. Bonding metal surfaces creates a low-impedance exit path for high-frequency energy.

Figure 2.20 illustrates recommended bonding practices for painted panels, enclosures and mounting brackets. Improper bonding blocks that direct exit path and allows high-frequency energy to travel elsewhere in the cabinet. Excessive high-frequency energy can effect the operation of other microprocessor controlled equipment.

Figure 2.20
Recommended bonding practices

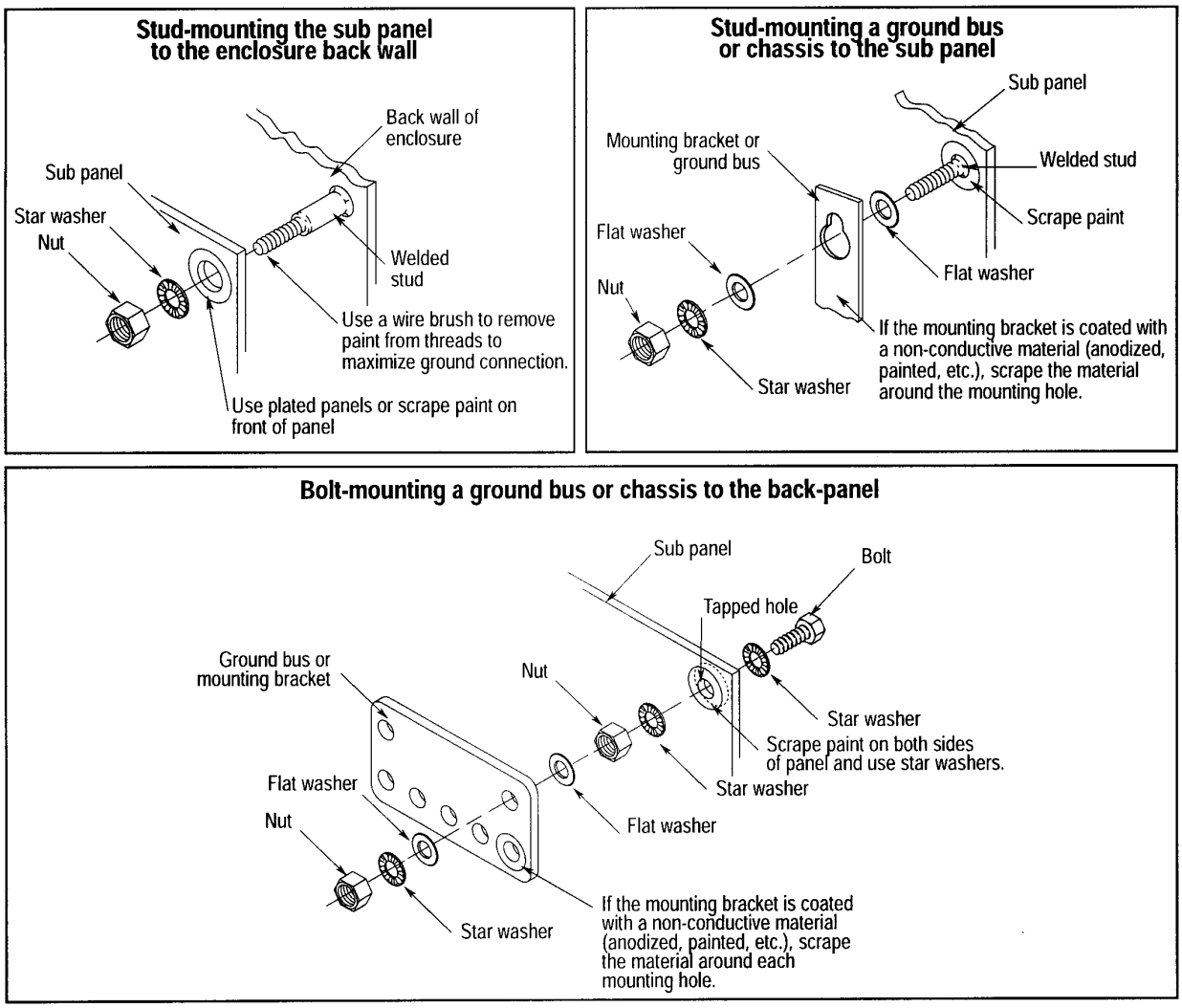

Multiple Sub Panels

Bonding multiple sub panels creates a common low impedance exit path for the high frequency energy inside the cabinet. Sub panels that are not bonded together may not share a common low impedance path. This difference in impedance may affect networks and other devices that span multiple panels. Refer to the illustration below for recommended bonding practices.

Figure 2.21
Multiple sub-panels and cabinet

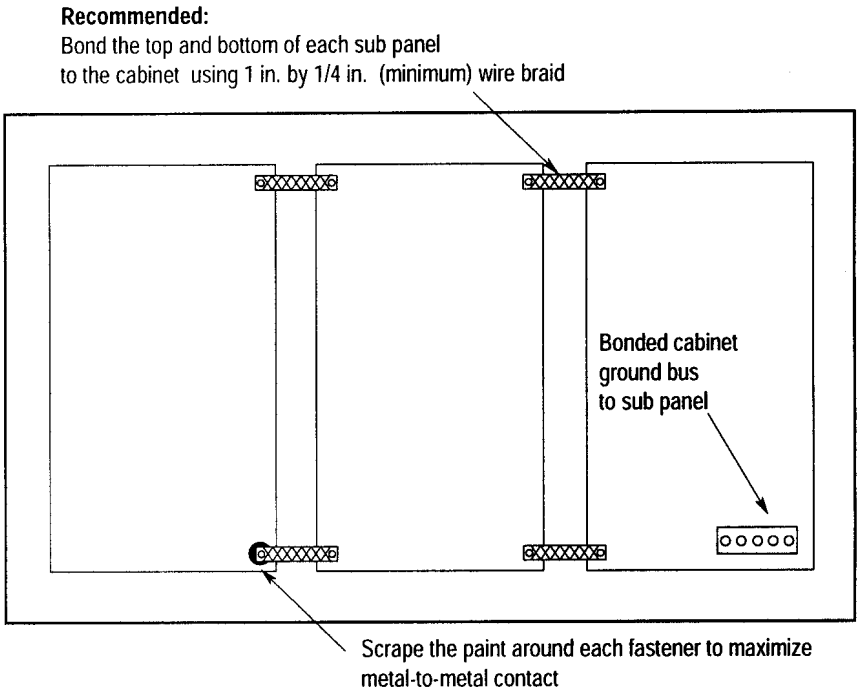

Motors and Cables

The system tests were made using Rockwell Automation/Allen-Bradley motors, and both shielded and unshielded power cables. The shielded cables have a 0.5" portion of the cable jacket stripped off, exposing the shield approximately 12" from the PDM end of the cable. This stripped area is to be clamped onto the chassis for shield termination when used with the ULTRA Plus PDMs. Refer to "Motor power EMC shield connection" on page 3-20.

Low Voltage Directive

The PDMs must be mounted in an enclosure that provides a minimum of IP4X protection, such that only authorized individuals have access to them.

ATTENTION

High voltage is present on the DC Bus and terminal block connections for several minutes after electrical power is removed.

Motor connectors are for assembly and disassembly only. These connections should never be made or broken while the PDM is energized. Measure remaining voltage on terminal block prior to removing the protective cover or touching any connections.

Failure to observe this safety procedure could result in personal injury or damage to equipment.

I/F 24V Sourcing Conversion Card

The ULTRA Plus PDM has sinking (active low) I/O which is common in the US. Sourcing (active high) I/Os are preferred in Europe. Rockwell Automation offers a DIN rail mounted card which converts the I/O from sinking to sourcing. This card must be mounted in the same enclosure as the PDM.

IMPORTANT A user supplied external 24VDC power supply is required for this option.

ULTRA Plus PDM I/F Conversion Card

Description	Alternate Number
I/F Conversion Card, 24V Sourcing(1)	9103-0152
Cable, I/F Conversion Card - 3ft (1m)	44-0141-003
Cable I/F Conversion Card - 10ft (3m)	44-0141-010

(1) Required for compliance with the European Union Low Voltage Directive (LVD). It must be mounted in the same enclosure as ULTRA Plus PDM.

Emergency Stop Contactor

Some machines require that a contactor be inserted between the motor and PDM for emergency stop purposes. A hazard analysis of the machine will determine if this is needed. If used, the contactor must not simply break the motor current, it must switch a 3-phase resistive load in parallel with the motor windings. The three resistors will provide dynamic braking and a category zero stop. The resistors also can prevent continuous arcing at the main contacts when breaking DC currents, such as when the motor is at stall. Simply breaking the motor current can result in very high voltages due to motor inductance which can cause prolonged arcing in the contactor. The contactor could catch fire in extreme cases.

A contactor was simulated in most EMC tests by breaking the motor lead and taking it through large rail mounted terminals. This simulates a closed contactor, which is acceptable as the contactor would be closed for normal operation of the PDM. The method of connection of the screen and ground cables was as shown below. The shields should be unbraided, rather than soldering a drain wire to the shield. Connection lengths should be minimized.

Figure 2.22
Emergency Stop Contactor Wiring

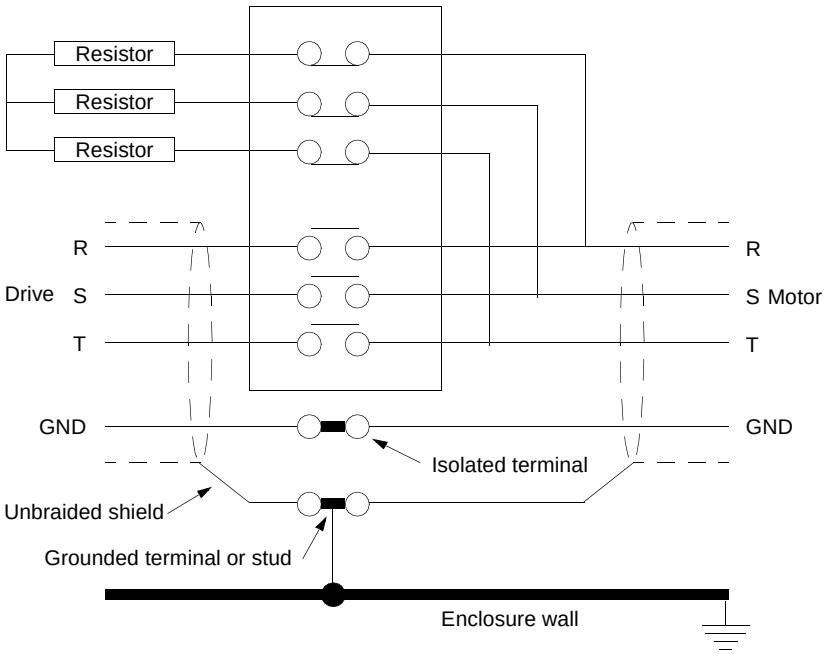

The safety ground (GND) and shield connections are permanently connected. This is essential for electrical safety.

IMPORTANT The safety ground is not connected to local ground at the point where the contactor is inserted in the lines, but the shield is. This is done for EMC reasons.

Electromagnetic Compatibility

Perhaps no other subject related to the installation of industrial electronic equipment is so misunderstood as electrical noise. The subject is complex and the theory easily fills a book. This section provides guidelines that can minimize noise problems.

The majority of installations do not exhibit noise problems. However, the filtering and shielding guidelines are provided as counter measures. The grounding guidelines provided below are simply good grounding practices. They should be followed in all installations.

Electrical noise has two characteristics: the generation or emission of electromagnetic interference (EMI), and response or immunity to EMI. The degree to which a device does not emit EMI, and is immune to EMI, is called the device's ElectroMagnetic Compatibility (EMC).

Equipment for use in the European Union legally requires a specific level of EMC. Since this applies when the equipment is brought into use, it is of considerable importance that a PDM system, as a component of a machine, be correctly installed. Installation guidelines for specific products can be found in the product manuals, or as separate documents available from Rockwell Automation.

Figure 2.23 shows the commonly used EMI model. The model consists of an EMI source, a coupling mechanism and an EMI victim. Devices such as servo drives and computers, which contain switching power supplies, and microprocessors are EMI sources. The mechanisms for the coupling of energy between the source and victim are conduction and radiation. Victim equipment can be any electromagnetic device that is adversely affected by the EMI coupled to it.

Figure 2.23
EMI Source-Victim Model

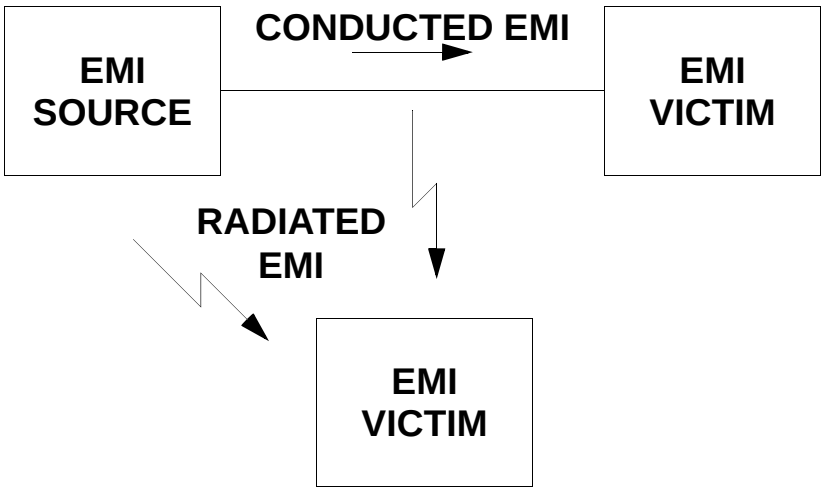

Immunity to EMI is primarily determined by equipment design, but how you wire and ground the device is also critical to achieving EMI immunity. Therefore, it is important to select equipment that has been designed and tested for industrial environments. The EMI standards for industrial equipment include EN 61000-4-X series (IEC 1000-4-X and IEC 801-X series), ANSI C62 and C63, and MIL-STD-461. Also, in industrial environments, you should use encoders with line driver outputs rather than single ended outputs, and digital inputs/outputs with electrical isolation, such as those provided with optocouplers.

The EMI model provides only three options for eliminating the EMC problem:

- reduce the EMI at the source,
- increase the victim's immunity to EMI (harden the victim),
- reduce the EMI at the victim (eliminate the coupling mechanism).

In the case of servo drives, reducing the EMI source requires slowing power semiconductor switching speeds. However, this adversely affects PDM performance with respect to heat dissipation and speed/torque regulation. Hardening the victim equipment may not be possible or practical. The final, and often the most realistic solution is to reduce the coupling mechanism between the source and victim. This can be achieved by filtering, shielding, and grounding.

Filtering

As mentioned above, high frequency energy can be coupled between circuits via radiation or conduction. The AC power wiring is one of the most important paths for both types of coupling mechanisms. The AC line can conduct noise into the PDM from other devices, or it can conduct noise directly from the PDM into other devices. It can also act as an antenna and transmit or receive radiated noise between the PDM and other devices.

One method to improve the EMC characteristics of a PDM is to use an isolation AC power transformer to feed the amplifier its input power. This minimizes inrush currents on power up and provides electrical isolation. In addition, it provides common mode filtering, although the effect is limited in frequency by the interwinding capacitance. Use of a Faraday shield between the windings can increase the common mode rejection bandwidth, (shield terminated to ground) or provide differential mode shielding (shield terminated to the winding).

IMPORTANT "Common mode" noise is present on all conductors referenced to ground. "Differential mode" noise is present on one conductor referenced to another conductor.

An alternative is to use AC line filters to reduce the conducted EMI emitting from the PDM. This allows nearby equipment to operate undisturbed. In most cases an AC line filter will not be required unless other sensitive circuits are powered off the same AC branch circuit. The basic operating principle is to minimize the high frequency power transfer through the filter. An effective filter achieves this by using capacitors and inductors to mismatch the source impedance (AC line) and the load impedance (PDM) at high frequencies.

For Rockwell Automation/Allen-Bradley PDMs brought into use in Europe, the use of the correct filter is essential to meet emissions requirements. Detailed information on filters is included in the PDM specific document. Transformers should also be used as specified in the PDM manual.

The following table shows suitable filter types for Rockwell Automation/ Allen-Bradley products. The filters identified are manufactured by Schaffner or Roxburgh and are widely available from commercial sources. Filters manufactured by Rasmi have also been tested successfully for EU compliance. There are many AC line filter manufacturers whose products could be successfully integrated. One manufacturer cannot be recommended over another manufacturer. The machine builder is responsible for the suitability of the filter selection in a specific application. Further information is available from the manufacturers.

Rockwell Automation/Allen-Bradley PDM/ Power Supply Suitable AC Line Filter Types	**Roxburgh Part Number**	**Schaffner Part Number**
Single phase PDMs	MIF xx or MDF xx	FN 350-xx
Three phase PDMs	MIF3xx or MDF 3xx	FN 351-xx
Rockwell Automation stocks some Roxburgh filters, but does not offer low current single phase filters. Most applications are multiple axis such that multiple PDMs may be connected to a filter (e.g. MDF xx) with higher current rating. Manufacturer phone numbers: Roxburgh 01724-281770 (011-44-1724-281770 from USA), and Schaffner (1-800-367-5566).		

AC Line Filter Selection

Selection of the proper filter is only the first step in reducing conducted emissions. Correct filter installation is crucial to achieving both EMI attenuation and to ensure safety. All of the following guidelines should be met for effective filter use:

1. The filter must be mounted close to the PDM input terminals. This is particularly important for higher frequency emissions (5-30 MHz). If the distance exceeds 600 mm (2 ft), then a strap should be used to connect the ground between the PDM and filter, rather than a wire.

2. The wires connecting the AC source to the filter should be shielded from, or at least separated from other high power cables (i.e. connection between the PDM and the filter, motor power cable, etc.). If the connections are not segregated from each other then the EMI on the PDM side of the filter can couple over to the source side of the filter, thereby reducing or eliminating the filter effectiveness. The coupling mechanism can be radiation, or stray capacitance between the wires. The best method of achieving this is to mount the filter where the AC power enters the enclosure. Figure 2.24 on page 2-41 contrasts a good installation with a poor one.

3. When multiple power cables enter an enclosure, an unfiltered line can contaminate a filtered line external to the enclosure. Therefore all lines must be filtered to be effective. The situation is similar to a leaky boat. All the holes must be plugged to prevent sinking.

4. If the filter is mounted excessively far from the PDM, it may be necessary to mount it to a grounded conductive surface (the enclosure) to establish a high frequency (HF) connection to that surface. To achieve the HF ground, the surface interface between the filter and the structure should be free from paint or any other insulator. This may require paint removal from the inside of a cabinet or panel.

Figure 2.24
AC Line Filter installation

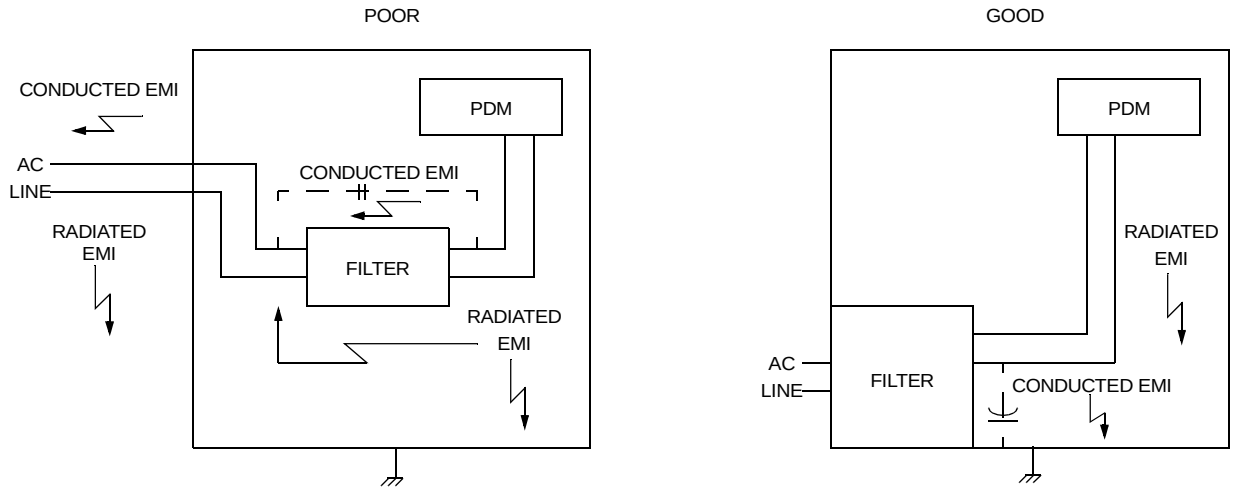

ATTENTION

High voltage exists in AC line filters.

The filter must be grounded properly before applying power. Filter capacitors retain high voltages after power removal. Before handling the equipment, voltages should be measured to determine safe levels.

Failure to observe this precaution could result in personal injury.

The only reasonable filtering at the PDM output terminals is the use of inductance. Capacitors would slow the output switching and deteriorate the PDM performance. A common mode choke can be used to reduce the PDM emissions. This will reduce emission coupling through the PDM back to the AC line. However, the motor cable still carries a large HF voltage and current. In fact, the motor cable length directly affects the amplitude and frequency of the emissions on the AC line. Therefore, it is very important to segregate the motor cable from the AC power cable. For applications where long motor cables are required, the need for AC line filtering increases.

Grounding

High frequency (HF) grounding is different from safety grounding. A long wire is sufficient for a safety ground, but is completely ineffective as an HF ground due to the wire inductance. As a rule of thumb, a wire has an inductance of 8 nH/cm (20 nH/in) regardless of diameter. At low frequencies it acts as a constant impedance, at intermediate frequencies as an inductor, and at high frequencies as an antenna. The use of ground straps is a better alternative to wires. However the length to width ratio must be 5:1, or better yet 3:1, to remain a good high frequency connection.

The ground system's primary purpose is to function as a return current path. It is commonly thought of as an equipotential circuit reference point, but different locations in a ground system may be at different potentials. This is due to the return current flowing through the ground systems finite impedance. In a sense, ground systems are the sewer systems of electronics and as such are sometimes neglected.

The primary objective of a high frequency ground system is to provide a well defined path for HF currents and to minimize the loop area of the HF current paths. It is also important to separate HF grounds from sensitive circuit grounds. A single point, parallel connected ground system is recommended. Figure 2.25 shows single point grounds for both series (daisy chain) and parallel (separate) connections. Multiple PDMs should be connected to the AC source in a parallel fashion.

Figure 2.25
Single point ground types

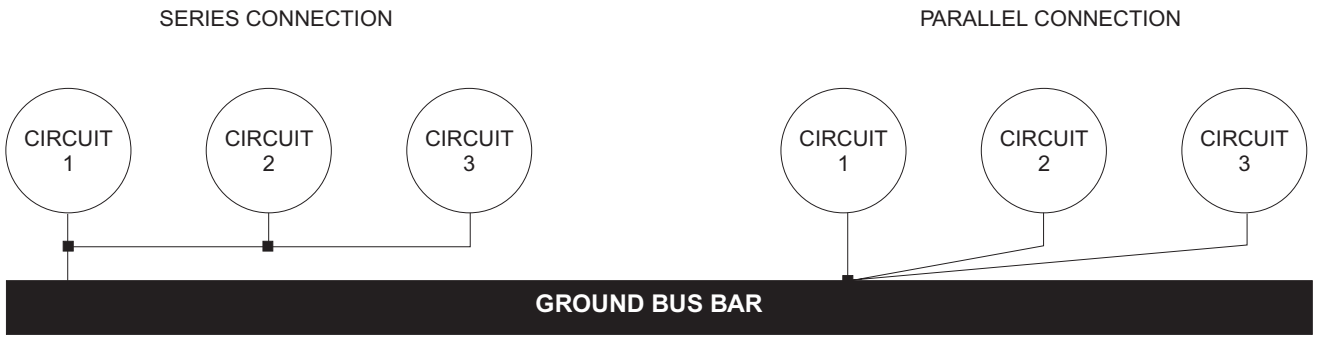

A ground bus bar or plane should be used as the "single point" where circuits are grounded. This will minimize common (ground) impedance noise coupling. The ground bus bar (GBB) should be connected to the AC ground, and if necessary, to the enclosure. All circuits or subsystems should be connected to the GBB by separate connections. These connections should be as short as possible, and straps should be used when possible. The motor ground conductor must return to the ground terminal on the PDM, not the GBB.

Shielding and Segregation

The EMI radiating from the PDM enclosure drops off very quickly over distance. Mounting the PDM in a conductive enclosure, such as an industrial cabinet, further reduces the radiated emissions. The cabinet should be set up to act as a Faraday cage. The cabinet should have a high frequency ground and the size of openings should be minimized. All ULTRA Plus PDMs must be mounted in an industrial cabinet to meet safety requirements.

The primary propagation route for EMI emissions from a PDM is through cabling. The cables conduct the EMI to other devices, and can also reradiate the EMI. For this reason, cable segregation and shielding are important factors in reducing emissions. Cable shielding can also increase the level of immunity for a PDM.

Where shielded cables are unterminated as the cable connection passes through the wall of the cabinet, the shield must be bonded to the cabinet wall to prevent noise picked up by the shielding inside the cabinet from being radiated outside the cabinet by the cable. Where shielded cables are terminated using connectors, the shield must not be grounded inside the connector through a drain wire, or noise on the shield will couple onto the signal conductors inside the connector. Connectors should have conductive backshells and the shield should be terminated to ground only through the

backshell. The following suggestions are recommended for all installations, especially since they are inexpensive:

1. Use a shielded motor cable that is terminated at both ends. The shield should be connected to the GBB or chassis at the PDM end, and the motor frame at the motor end. The coaxial configuration provides magnetic shielding, and the shield provides a return path for HF currents which are capacitively coupled from the motor windings to the frame. If power frequency circulating currents are an issue, a 250 VAC capacitor should be used at one of the connections to block to 50/60 Hz currents while passing HF currents.

2. Signal cables (encoder, serial, analog) should be routed away from the motor cable and power wiring. Separate steel conduit can be used to provide shielding between the signal and power wiring. Do not route signal and power wiring through common junctions or raceways.

3. Signal cables from other circuits should not pass within 300 mm (1 ft) of the PDM.

4. The length or parallel runs between other circuit cables and the motor or power cable should be minimized. A rule of thumb is 300 mm (1 ft) of separation for each 10 m (30 ft) of parallel run. The 300 mm (1 ft) separation can be reduced if the parallel run is less than 1 m (3 ft).

5. Cable intersections should always occur at right angles to minimize magnetic coupling.

6. Do not route any cables connected to the PDM directly over the PDM vent openings. Otherwise the cables will pick up the emissions leaked through the vent slots.

7. If you construct your own motor cable, a 4-conductor cable should be used, with the 4 conductors twisted. The ground conductor must be attached to the motor and PDM earth terminals. The shield must be separately terminated according to the guidelines for the specific PDM.

8. The encoder mounted on the brushless servo motor should be connected to the PDM with a cable using multiple twisted wire pairs and an overall cable shield. Standard Rockwell Automation/Allen-Bradley encoder cables are offered that are terminated in various lengths. If building your own cable, be sure to connect the cable shield to the motor case and to the PDM chassis through the connectors for a complete 360° connection (per the cable assembly diagram) otherwise noise on the encoder signals can cause faults in the PDM.

If EMI problems persist, additional counter measures can be attempted. Several suggestions for systems modifications follow:

1. A ferrite "doughnut" or torroid around a signal cable may help. The ferrite will attenuate common mode noise but will do nothing for differential mode noise. Specifically, this should help RS232 communication problems.

Figure 2.26
Torroid encoder shielding method for brushless servo motors

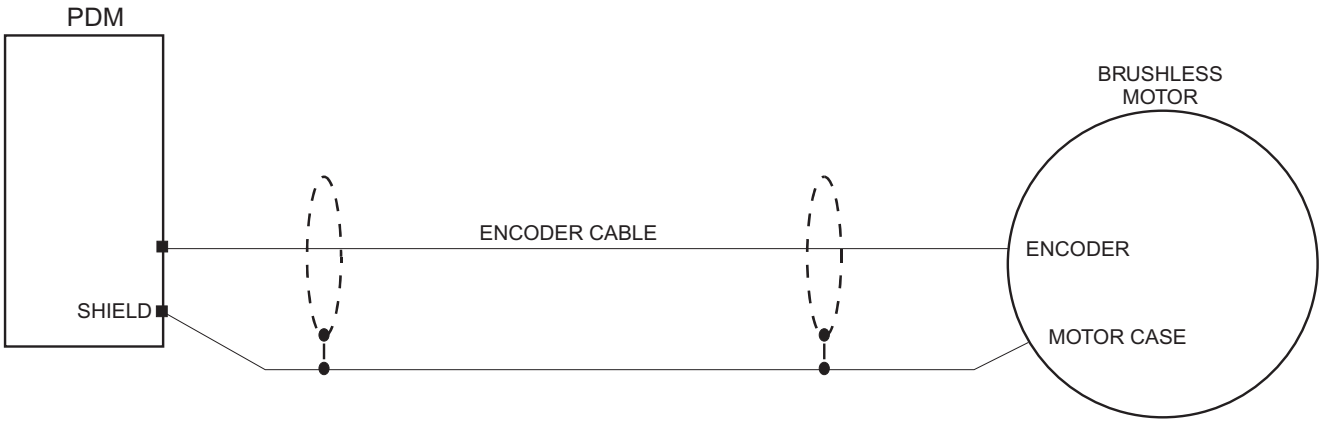

Recommended raw cable for building your own cable	
Belden Part number	Carol Part number
8337	C0625

2. Suppress each switched inductive device that is near the servo amplifier. This includes solenoids, relay coils, starter coils and AC motors (such as in motor driven mechanical timers).

3. DC coils should be suppressed with a 'free-wheeling' diode connected across the coil.

4. AC coils should be suppressed with RC filters (a 200 ohm 1/2 Watt resistor in series with a 1/2 microFarad, 600 Volt capacitor is commonly used).

5. Motor power windings can be grounded, shielded, and choked to minimize noise emissions.

Figure 2.27
Motor power winding methods to minimize noise emissions

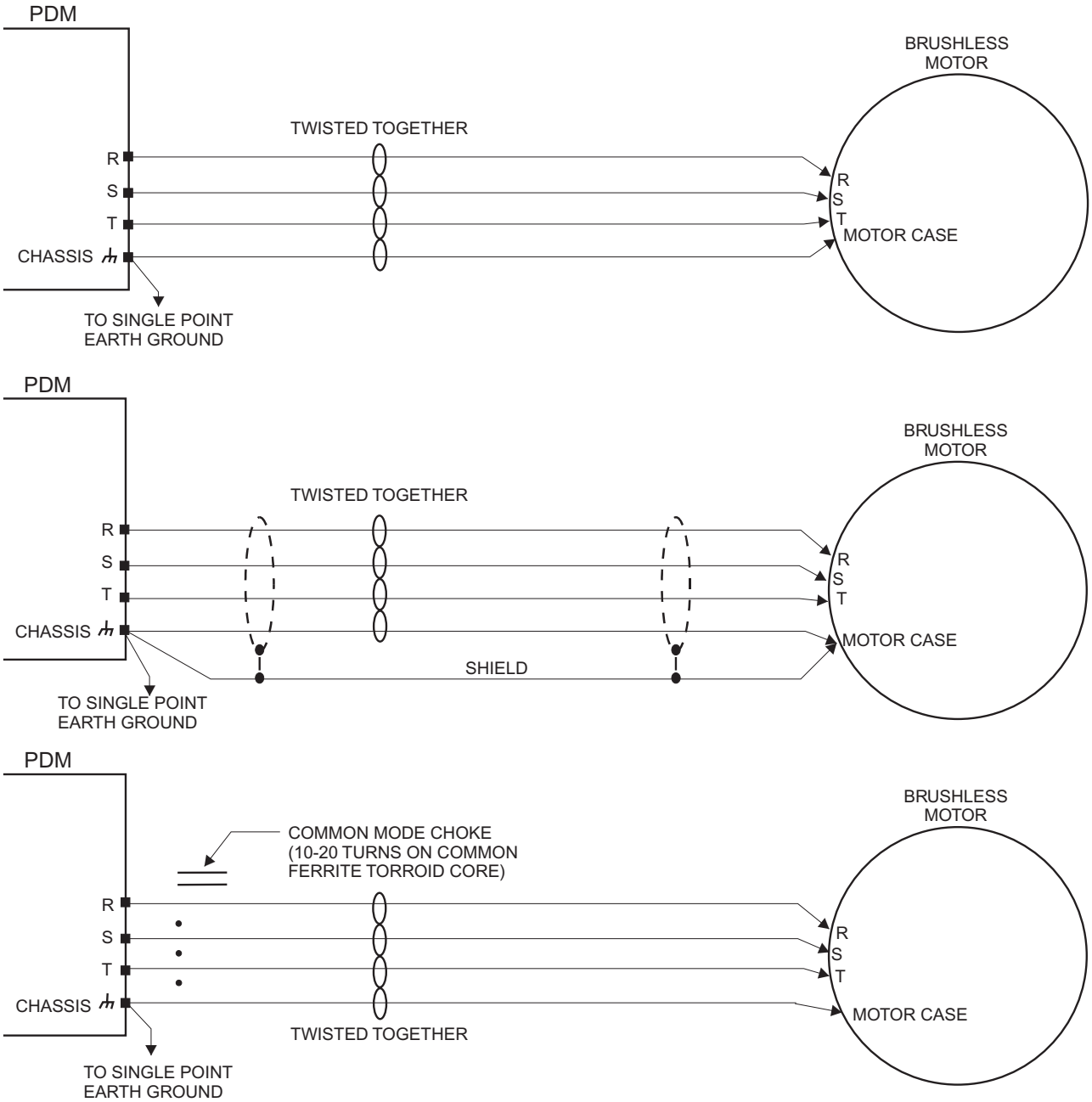

Chapter 3

Wire the ULTRA Plus PDM Components

This chapter explains the wiring requirements of an ULTRA Plus PDM system.

System Power Connections

ATTENTION

The user is responsible for conforming to National Electrical Codes and all other applicable local codes.

Failure to conform to codes can result in damage to the equipment or severe bodily injury.

1398-PDM-10, 20, 75, and 150B

The 1398-PDM-10, 20, and 30 require single phase AC power, 100 to 240 VAC. The 1398-PDM-75 and 150B require three-phase AC power, 100 to 240 VAC. The input power may be optionally isolated through a transformer. Field wiring must be copper, with a minimum rating of 60°C. The phasing of L1 and L2/N to the 1398-PDM-10, 20, and 30 is arbitrary. The phasing of the 1398-PDM-75 and 150B is L1, L2/N and L3. The earth ground connection is required for safe and proper system operation. Terminal block connections should be torqued to 11 lb-in (1.25 Nm). The 1398-PDM-10, 20, 75, and 150B does not contain supply fuses or disconnecting devices. These must be supplied by the machine builder and connected externally for safety and maintenance purposes.

Figure 3.1
Power Wiring Diagram for 1398-PDM-10, 20, and 30

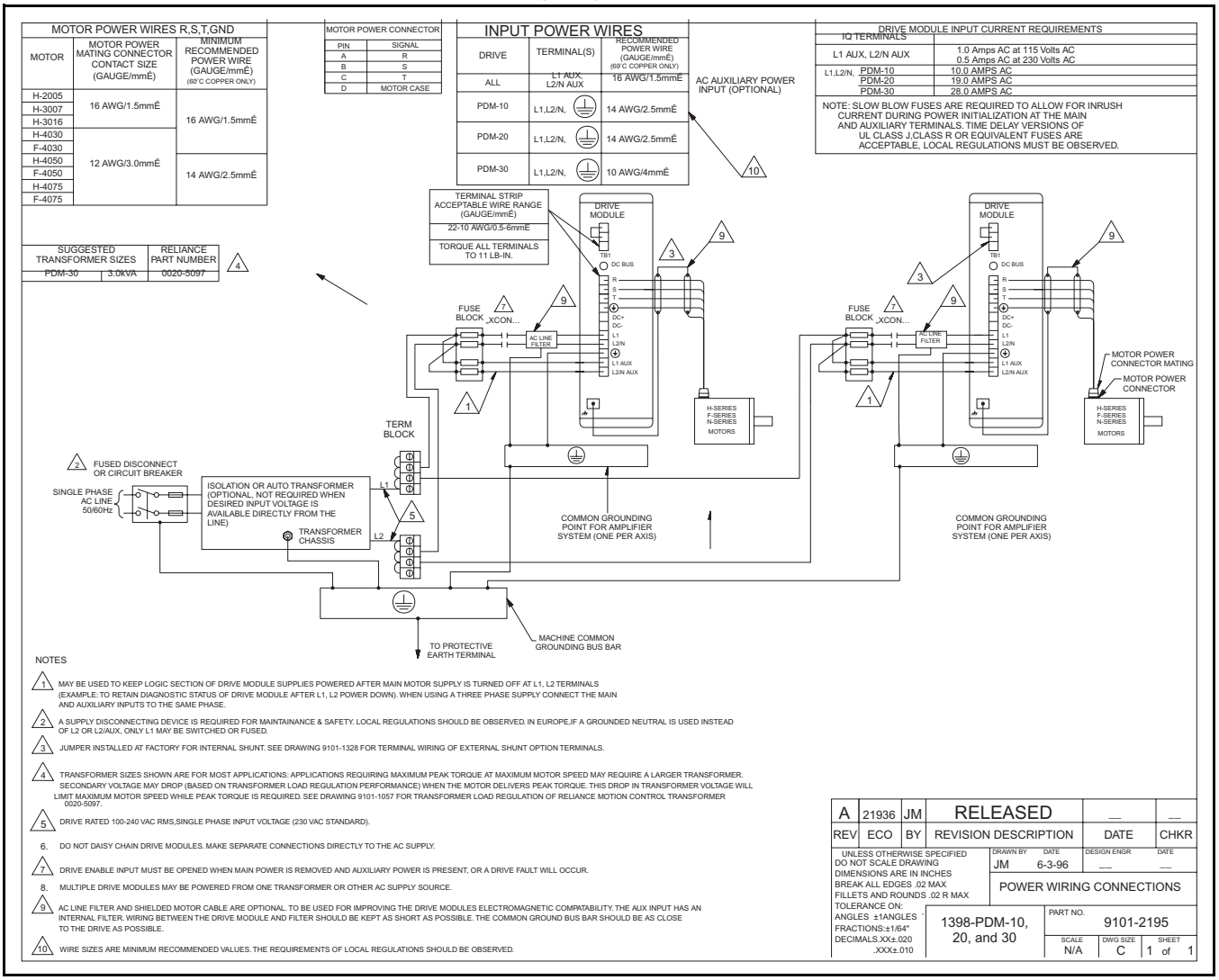

Figure 3.2
Power Wiring for 1398-PDM-75

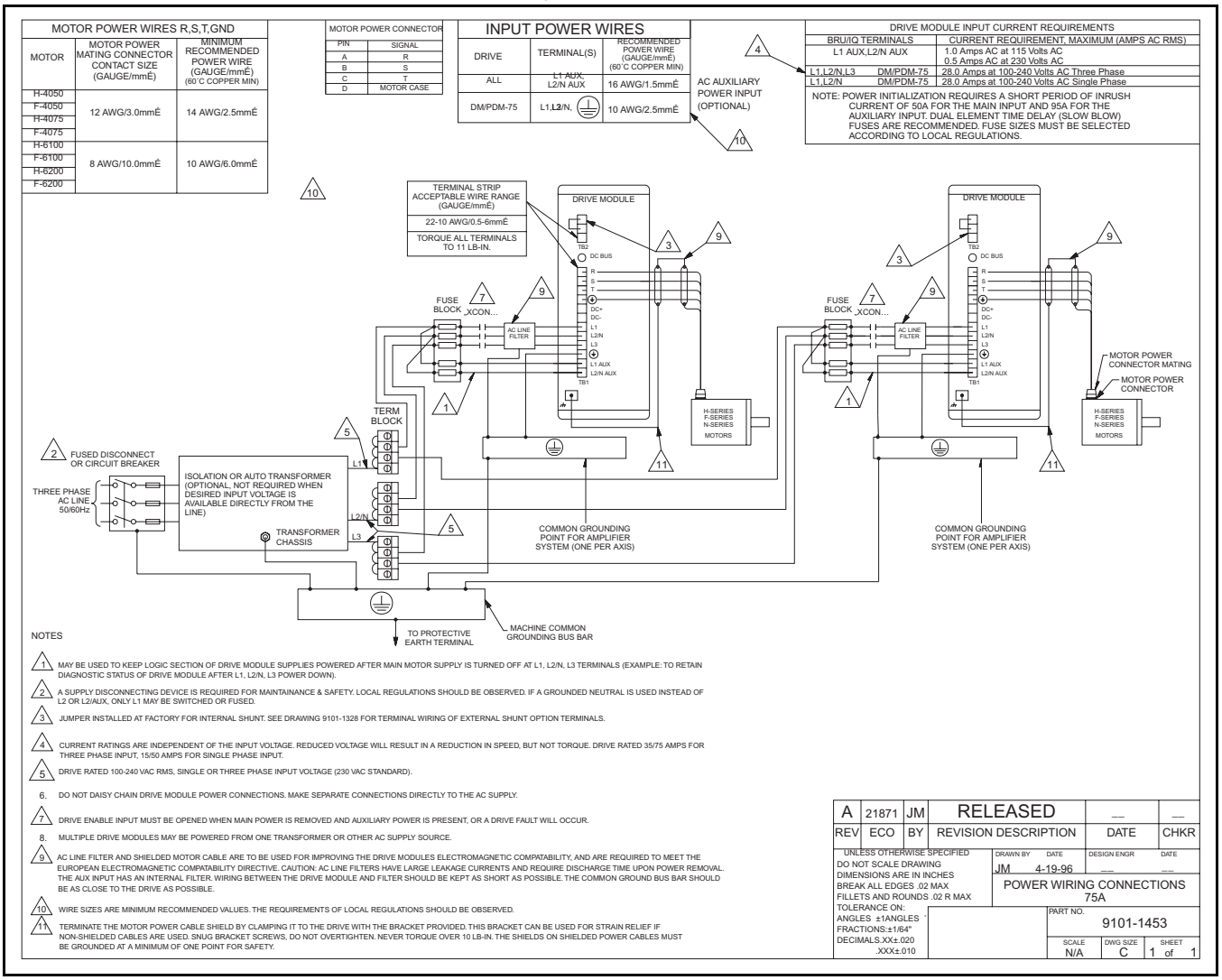

Figure 3.3
Power Wiring for 1398-PDM-150B

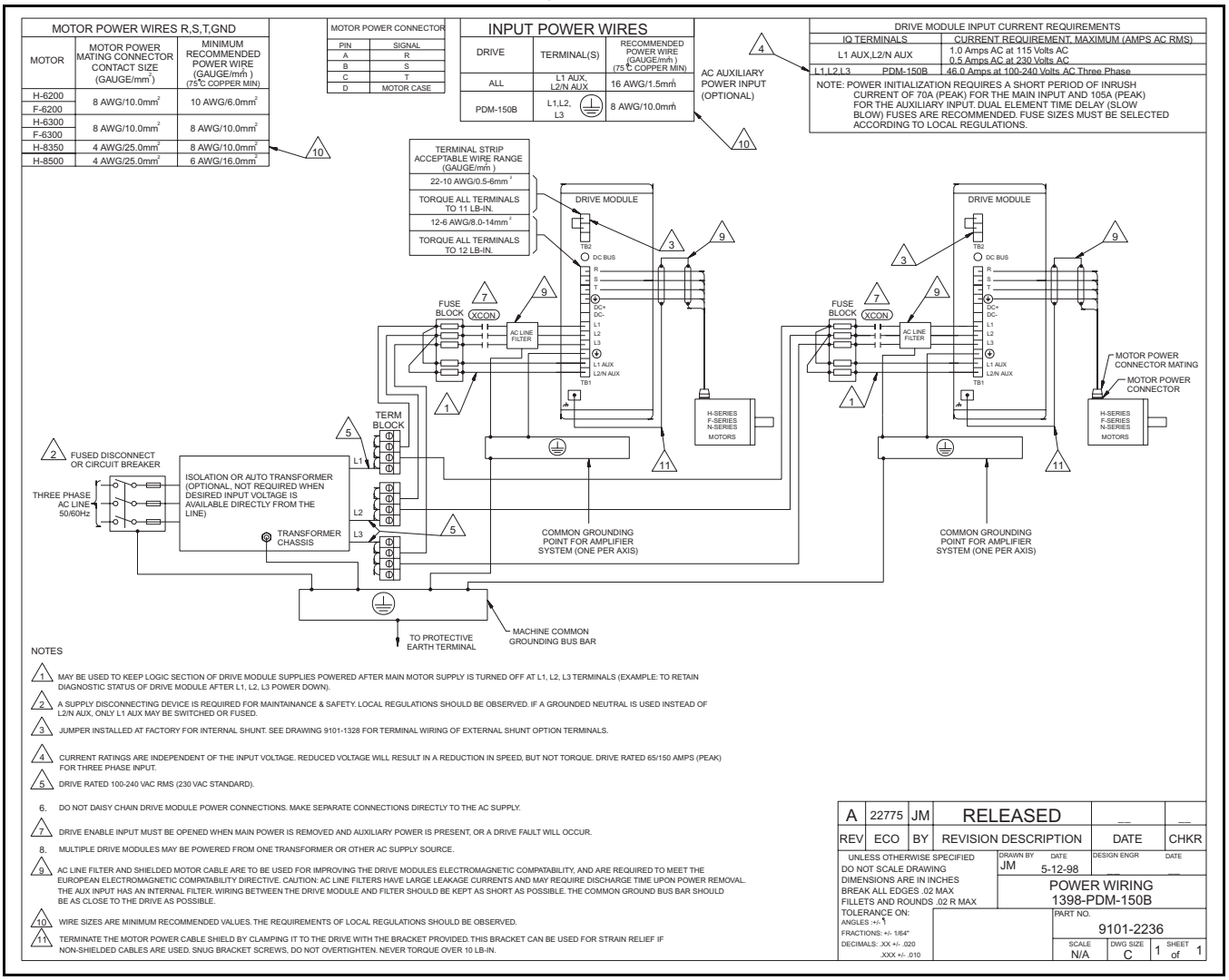

The above drawings describe an optional AC line filter, and shielded motor cable. These can be used in conjunction with the grounded metal enclosure to meet the Electromagnetic Compatibility requirements of the European Machinery Directive. Refer to "Electromagnetic Compatibility" on page 2-36 for a discussion of EMC.

ATTENTION

A power cable with an ungrounded shield can result in high voltages on the shield and anything connected to it.

Shielded power cables must be grounded at a minimum of one point for safety.

Failure to observe this precaution could result in damage to the equipment or severe bodily injury.

Auxiliary Logic Power

Single phase AC power, 100-240 VAC, may be supplied to the internal logic supply through L1 AUX and L2/N AUX.

Auxiliary supply power to the internal logic supply is useful if the ULTRA Plus PDM logic must stay ON when the motor power must be turned OFF. Absolute positioning is one example of when this would be useful, since position information is maintained as long as logic power is on. Another example would be maintaining the ULTRA Plus PDM logic power so the ULTRA Plus PDM serial interface could be used for diagnostics.

1398-PDM-25, 50, 100, and 150

Figure 3.4
Power Wiring Diagram (1398-PDM-25, 50, 100, and 100)

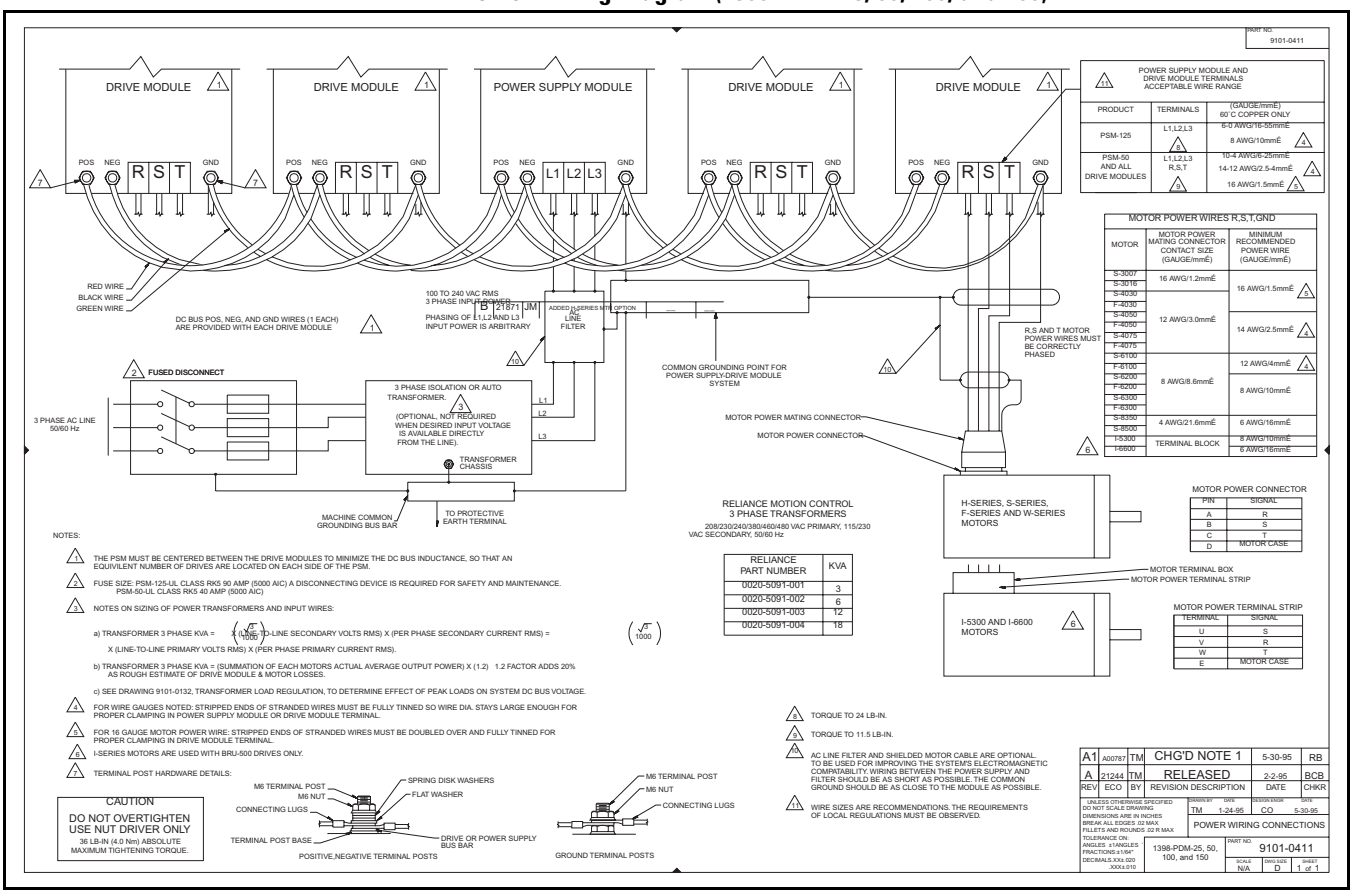

Power Supply Module (PSM)

The Power Supply Module (PSM) can supply DC power to as many as six ULTRA Plus PDMs. Three phase AC power, 115/230 VAC, is the only required input power for the PSM. The input power may be optionally isolated through a transformer. Field wiring must be copper, with a minimum rating of 60°C. The phasing of the input power L1, L2, and L3, is arbitrary. The earth ground connection is required for safe and proper system operation. Terminal block connections should be torqued to 11 lb-in (1.25 Nm) on the 1398-PSM-50 and 24 lb-in (2.75 Nm) on the 1398-PSM-125.

IMPORTANT

The 1398-PDM-25, 50, 100, and 150 does not contain supply fuses or disconnecting devices. These must be supplied by the machine builder and connected externally for safety and maintenance purposes.

The Power Supply Modules will continue to operate with reduced capacity with the loss of one phase. The red phase loss LED on the front of the PSM will turn ON to indicate the loss of the phase.

ATTENTION

The power supply module allows for operation to continue even in the event of loss of one phase or during power disruption on the three phase AC inputs.

Under these conditions, the Phase Loss LED will light, but the power supply is not disabled.

Extended operation of this product with an AC phase input missing will reduce the life of the product.

Refer to “Power Wiring Diagram (1398-PDM-25, 50, 100, and 100)” on page 3-5 for details. This drawing shows an optional AC line filter, and shielded motor cable. These can be used in conjunction with the grounded metal enclosure to meet the Electromagnetic Compatibility requirements of the European Machinery Directive. Refer to “Electromagnetic Compatibility” on page 2-36 for a discussion of EMC.

DC Bus Power

The DC bus from the PSM, supplies power to the ULTRA Plus PDM (1398-PDM-25, 50, 100, and 150). The PSM DC bus must be connected as shown in Power Wiring Diagram, Figure 3.4 on page 3-5, with the PSM in the center, using the connection wires provided.

ATTENTION

Do not substitute the DC bus wires provided, with other wires.

Failure to observe this precaution may result in damage to the equipment.

Auxiliary Logic Supply

An auxiliary power supply module (PSM-AUX) is available to supply DC power to the internal logic supplies of up to four ULTRA Plus PDMs if the PSM is OFF. The PSM-AUX uses single phase 115 VAC power as the input.

The PSM-AUX option is useful if ULTRA Plus PDM internal logic power must stay on even when the motor supply (the PSM) is off. Absolute positioning is one example of when the PSM-AUX would be useful, since position information is maintained as long as logic power is on. Another example would be maintaining ULTRA Plus PDM logic power so the serial interface could be used for troubleshooting and diagnostics. Refer to "PSM-AUX Outline and Connection Diagram" on page 2-15 for wiring information on the PSM-AUX and optional PSM-AUX isolation transformer.

Figure 3.5
Auxiliary Power Supply Connections

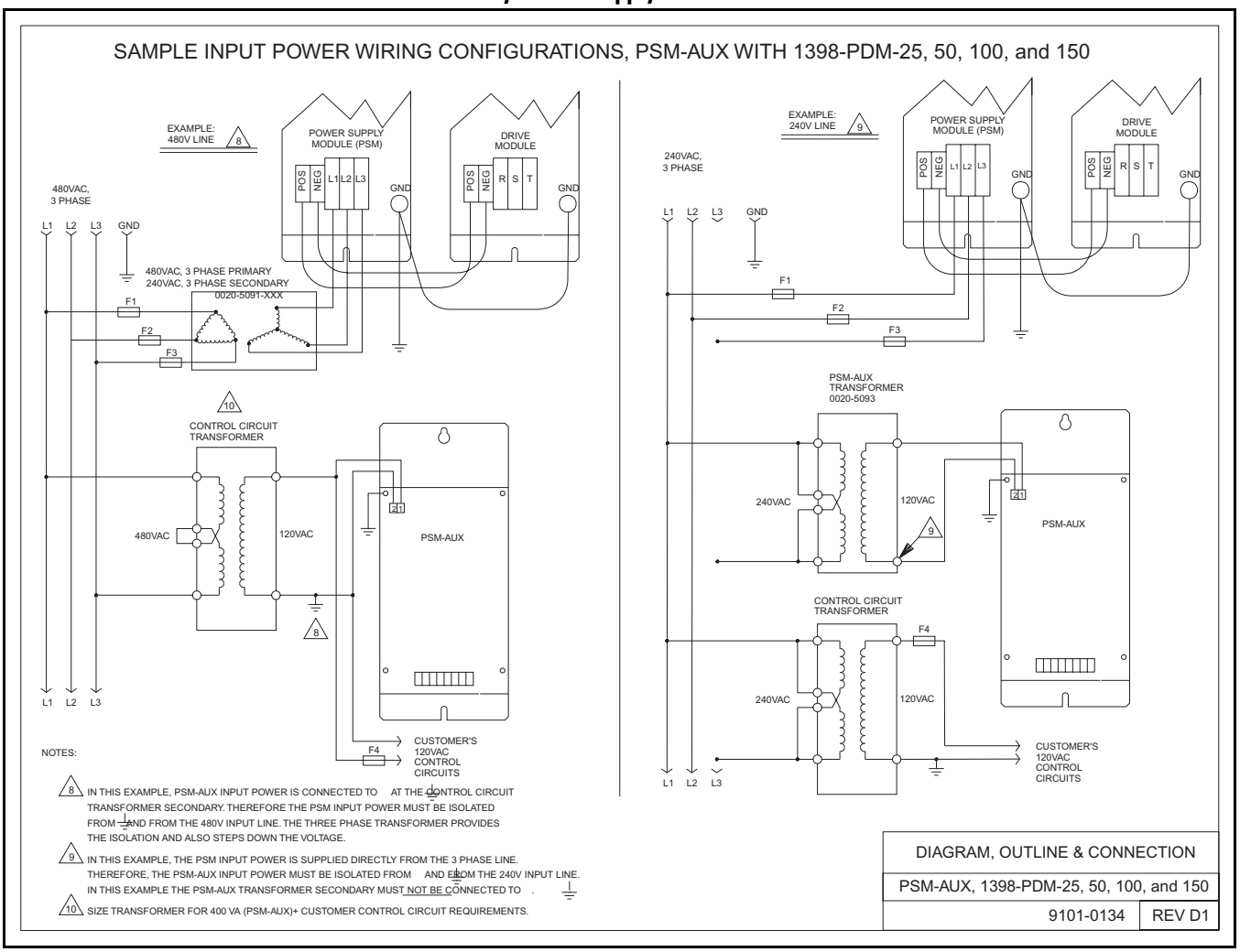

PSM Interface Logic

The Status and Enable signals on the PSM are indicated in the following table that interface the PSM with the PDM, or another control illustrates typical internal circuitry for the interface connections. Figure 3.7 shows external connections of the PDMs.

PSM Connector	Pin #	Signal Name
P1	1	Status-
General	2	Status +
Purpose	3	PSM Enable-
Inputs/Outputs	4	PSM Enable +

Figure 3.6
PSM interface - internal circuit examples

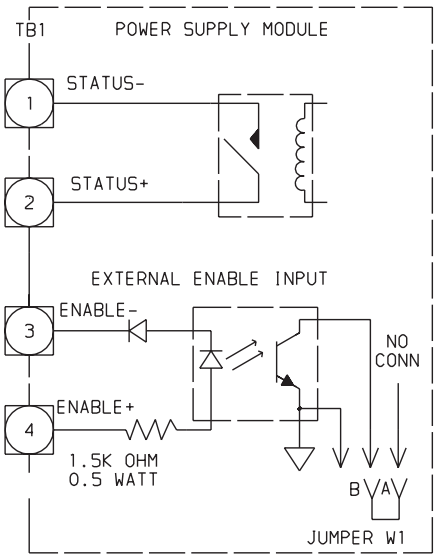

Figure 3.7
PSM interface - external connection examples

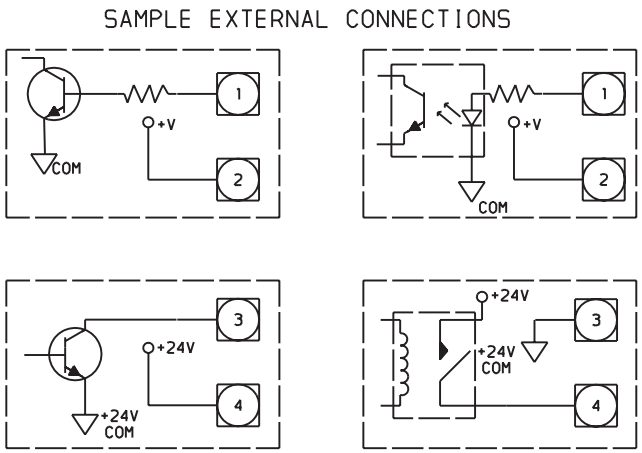

Status Outputs

The Status outputs are the contacts of a normally open relay, which closes to indicate that the PSM is operating properly. An open relay signals that no AC power is applied to the PSM or that a PSM fault has occurred. Refer to the above drawing for connection examples.

Enable Input

The PSM Enable input is an optically isolated input which controls the power output of the power supply module. The PSM Enable input is turned on by sourcing current through the opto-isolator. Refer to "PSM interface - external connection examples" on page 3-9 for connection examples. The input is only functional if jumper W1 is in the optional position, A. Refer to "Power Supply Module jumper location" on page 3-11.

With the jumper in the enable input activated position (optional Position A), the PSM is enabled if the enable input is ON. With the enable input OFF, the PSM DC bus is turned OFF and the dissipative shunt is turned ON to quickly discharge the DC bus capacitors and dynamically brake synchronous motors. This is to allow time for the PDMs to power-up and apply the enable signal to the PSM if the PSM is to remain ON.

ATTENTION

If the PSM is disabled during a power up, the DC bus voltage will be present for at least two (2) seconds before returning to a zero (0) volt condition.

With the jumper in the enable input deactivated position (standard Position B), the enable input has no effect on the PSM operation and the PSM activates itself when three phase voltage in the proper voltage range is connected to the input.

Figure 3.8
Power Supply Module jumper location

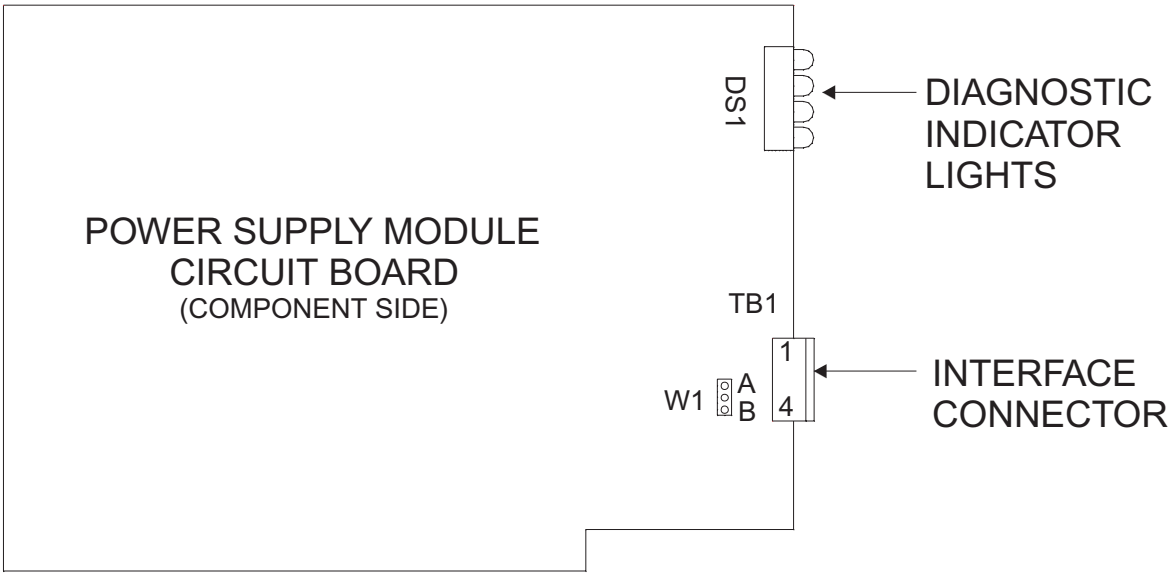

W1 JUMPER SETTING	SELECTS:
SHORTING JUMPER ACROSS TOP 2 PINS (POSITION A)	EXTERNAL ENABLE INPUT IS SELECTED. EXTERNAL CONNECTION IS REQUIRED TO CONNECTOR TB1 SIGNALS ENABLE+ AND ENABLE-. REFER TO INSTRUCTION MANUAL FOR SIGNAL SPECIFICATION AND DETAILS OF OPERATION BEFORE USING POSITION A.
SHORTING JUMPER ACROSS BOTTOM 2 PINS (POSITION B) (STANDARD SETTING)	EXTERNAL ENABLE INPUT IS DE-ACTIVATED. POWER SUPPLY MODULE IS ENABLED WHENEVER INPUT POWER IS APPLIED AND NO POWER SUPPLY MODULE FAULT CONDITIONS ARE DETECTED.

External Shunt Connections

The ULTRA Plus PDM (1398-PDM-10, 20, 75, and 150B) has a built-in shunt regulator. The following table depicts the internal shunt selection with a factory installed jumper between terminals 1 and 2. Removal of the internal shunt jumper and installation of a larger external shunt between terminals 1 and 3 allow more power to be dissipated.

Terminal	Identifier	Description
1	Internal or External	Positive DC BUS
2	Internal	Internal shunt regulator resistor
3	External	Shunt regulator transistor collector

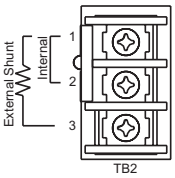

ATTENTION

High voltage is present on the terminals of the ULTRA Plus PDMs.

After removing power, check for remaining voltage before making or removing any connection.

Failure to observe this safety procedure could result in personal injury or damage to equipment.

ATTENTION

Restrict casual contact to equipment.

The ULTRA Plus PDMs and external shunt devices should be installed in an industrially rated cabinet to provide safe containment and restricted access.

Failure to observe this safety procedure could result in exposure to electrical hazards and damage to equipment.

ATTENTION

Loose high voltage wires can cause a fire.

Do not tin (solder) exposed leads on cables going to high voltage terminals. Soldered contracts may loosen over time.

Failure to observe this safety practice could result in intermittent service and damage to equipment.

The external shunt is enabled when the DC BUS increases to a specific value (420 VDC). An increase in DC BUS voltage may occur when the amplifier decelerates the motor and its load. This is due to the energy flow from the motor to the DC BUS. When the energy transferred from the rotating inertia causes the DC BUS voltage to exceed 420 VDC the shunt is enabled and excess energy is dissipated as heat.

Internal Shunt Dissipation Ratings

Shunt Rating	1398 PDM 10	1398 PDM 20	1398 PDM 30	1398 PDM 75	1398 PDM 150b
Continuous (W)	50.0				180.0
Peak (kW)	4.5			10.0	19.0

If the application requires a higher continuous power dissipation, the ULTRA Plus PDM provides easy access for an external shunt connection. If an external shunt is connected, the shunt jumper (between terminals 1 and 2) should be removed. Factory available External Shunt Kit (200W) or a External Shunt Kit (900W) can be used. These external shunts can be arranged to provide maximum power dissipation as long as the minimum resistance requirement is met. Refer to "External Shunt Wiring Examples" on page 3-14 for different configurations.

External Shunt Dissipation Power Ratings

Shunt Rating	1398 PDM 10	1398 PDM 20	1398 PDM 30	1398 PDM 75	1398 PDM 150b
Minimum Resistance (Ohms ±10%) (1)	30.0			18.0	9.0
Continuous Power (kW)2	0.8	1.8	2.4	4.0	8.0
Peak Power (kW) (2)	6.0			10.0	19.0

(1) For sizing purposes, approximately 420 Vpeak will drop across any given resistor assembly.

(2) Continuous and Peak Power Ratings are given measured with a minimum resistance shunt. Higher Resistances will decrease Power Rating.

Figure 3.9
External Shunt Wiring Examples

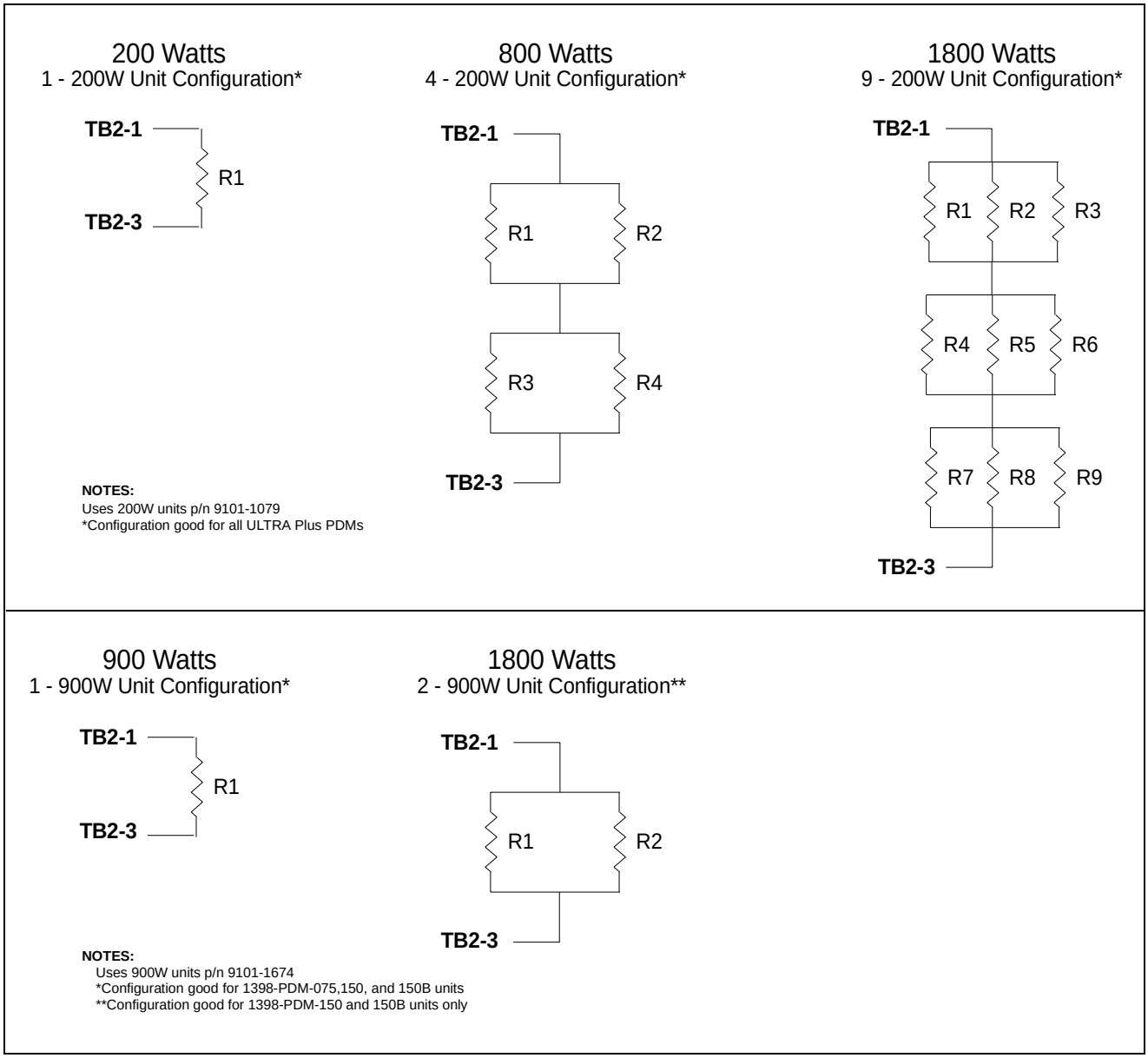

Replacing the PSM Shunt Fuse

The DC Bus shunt fuse is located in the Power Supply Module. To check and/or replace this fuse:

1. Measure voltages at L1, L2, and L3 phase to phase to ensure incoming power is OFF. Make sure that the green PSM READY LED is OFF. Remove the PSM cover.

2. Remove the shunt fuse and test with an ohmmeter.

IMPORTANT When replacing the 1398-PSM-50 and 1398-PSM-125 shunt fuse, a DC rated fuse must be used.

3. Replace the shunt fuse.

Figure 3.10
Shunt Fuse location

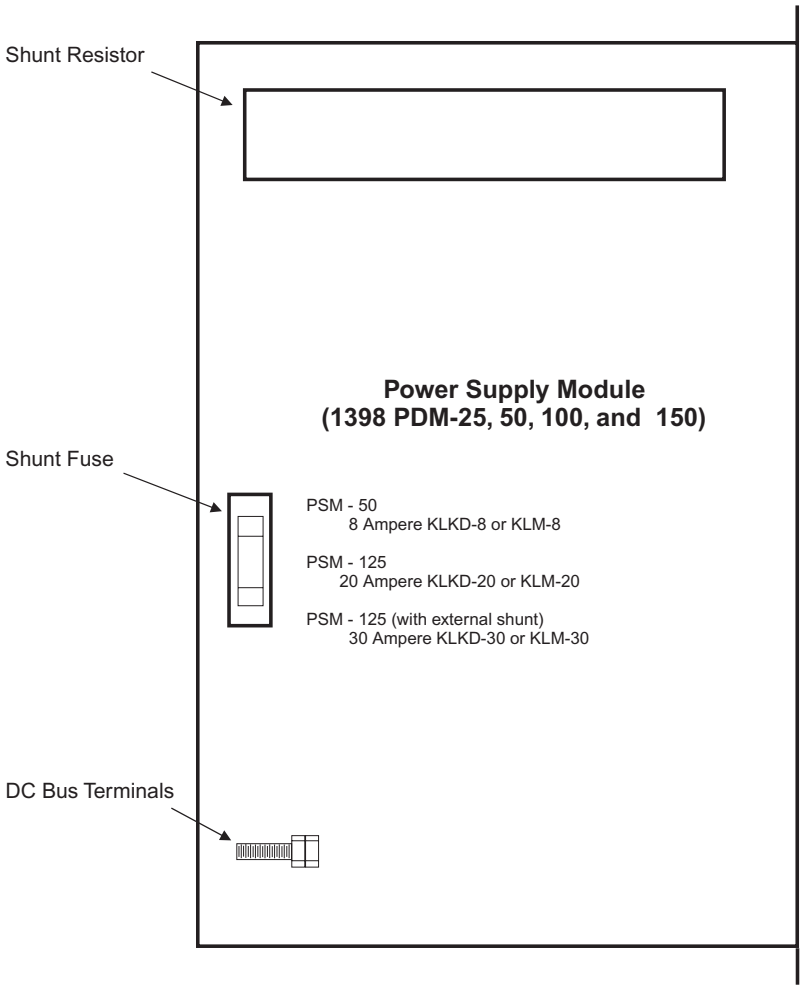

4. Install the PSM cover.

Operator Terminals

Power Connections (1398-HMI-002)

Figure 3.11 illustrates the power connections to the Operator Terminal 115/220/230/240 VAC single phase (9101-2017). It must be properly grounded to prevent radiating radio frequency noise.

Figure 3.11
Operator Terminal power connections

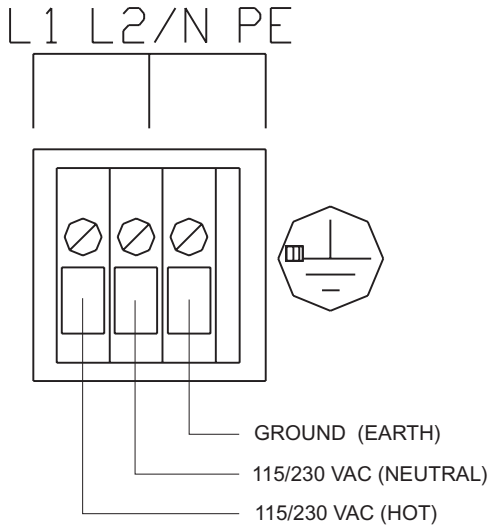

Power Connections (1398-HMI-003)

The ULTRA Plus 1398-HMI-003 Operator Terminal requires a 24 volt power supply rated at 0.5 amps unless otherwise stated on the label.

Figure 3.12
Operator Terminal connections (on back of unit)

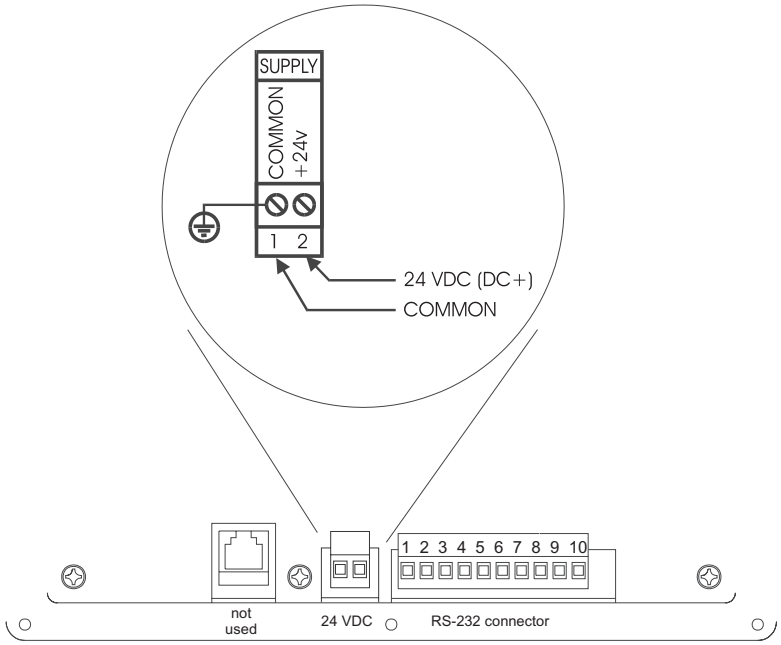

- The Operator Terminal requires a power supply capable of supplying a current of 500 mA at a regulated voltage of 24 volts. Supplies providing between 18 volts and 30 volts are also suitable.
- The terminal may take as little as 100 mA in certain circumstances, so be sure that the chosen power supply can operate correctly with this load. Large switch-mode supplies tend to need a certain minimum load before they will operate correctly.

It is very important how the power supply is mounted in relation to the Operating Terminal. Observe the following points:

- The power supply must be mounted close to the unit, with usually not more than 6 feet of cable between the supply and the Operator Terminal. Ideally, as short a length as is possible should be use. In particular, the power supply should not be mounted on the back of the panel when the Operator Terminal is installed in the panel door unless a short cable run can be achieved.
- The wire used to connect the Operator Terminal to its power supply should be at least 22 gauge wire. If a longer cable run is used, you will need to increase the cable gauge. The routing of the cable should be kept away from contactors, inverters, and other devices that generate significant electrical noise.

Motors

Power Connections

Phasing of the three-phase drive module outputs R, S, and T must conform to the motor R, S, and T leads for proper operation. Connect the earth ground to ensure a safe installation and proper operation. See Figure 3.13 for connector, pin, and signal identification of H, and F-Series motors.

Figure 3.13
Motor power connections for H, and F-Series motors

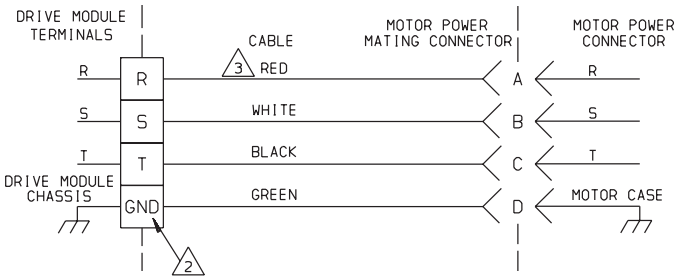

1. Do not interchange any connection in the cable
2. Ground connections:
   1398-PDM-10, 20, 30, 75, and 150B – screw terminal
   1398-PDM-25, 50, 100, and 150 – M6 stud
3. Wire colors shown reflect cables supplied by Rockwell Automation/ Allen-Bradley

See Figure 3.14 on page 3-18 for connector, pin and signal identification of N-Series motors.

Figure 3.14 Motor power connections N-Series motors

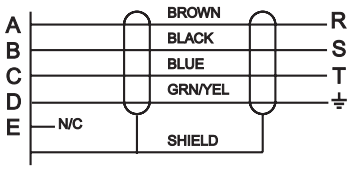

1. Do not interchange any connection in the cable
2. Ground connections:
   1398-PDM-10, 20, 30, 75, and 150B – screw terminal
   1398-PDM-25, 50, 100, and 150 – M6 stud
3. Wire colors shown reflect cables supplied by Rockwell Automation/ Allen-Bradley

ATTENTION

High voltage may be present on terminals of the ULTRA Plus PDM.

Remove power and disconnect the power cable before making or removing any connection.

Failure to observe this precaution could result in damage to the equipment or severe bodily injury.

Cable sizes are indicated in the appropriate drawings:

- Refer to "Power Wiring Diagram for 1398-PDM-10, 20, and 30" on page 3-2
- Refer to "Power Wiring for 1398-PDM-75" on page 3-3
- Refer to "Power Wiring for 1398-PDM-150B" on page 3-4
- Refer to "Power Wiring Diagram (1398-PDM-25, 50, 100, and 100)" on page 3-5

Standard cables supplied by Rockwell Automation/Allen-Bradley are not intended for applications where frequent flexing occurs.

ATTENTION

Motor power connectors are for assembly purposes only.

They should not be connected or disconnected while power is applied to the drive.

Failure to observe this precaution could result in damage to the equipment or severe bodily injury.

ATTENTION

Do not tin (solder) the exposed leads on cables.

Solder contracts over time and may loosen the connection.

Failure to observe this precaution could result in damage to the equipment or severe bodily injury.

Shield Termination

ATTENTION

Shielded power cables must be grounded at a minimum of one point for safety.

Failure to observe this precaution could result in damage to the equipment or severe bodily injury.

Rockwell Automation/Allen-Bradley motor power cables are shielded. The power cable is designed to be terminated at the drive during installation. A small portion of the cable jacket is stripped, which exposes the shield wires. The exposed area must be clamped at the left front of the drive chassis using the clamp provided near the bottom. It is critical for EMC performance that the shield wires be clamped against the area of the chassis which is not painted. This section of the chassis is labeled with the chassis ground symbol.

Figure 3.15
Motor power EMC shield connection

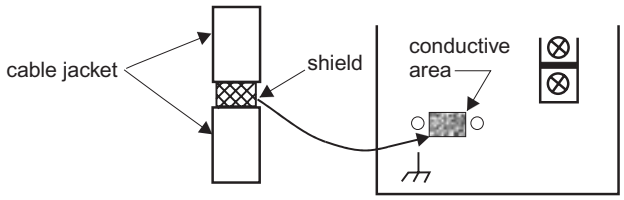

Refer to "Cables" on page 3-49 for a selection of shielded motor power cables.

Digital Inputs and Outputs

This section covers the control and interface connections between the PDM and the rest of the system. This includes: Digital I/O, Analog I/O, Relay Outputs, Encoders, Step and direction Inputs, and Serial Ports. Refer to "PDM control connections" on page 3-21 illustrating all control connections to the PDM.

See Figure 3.17 on page 3-22 showing the ULTRA Plus PDM, which provides 16 optically isolated inputs and eight optically isolated outputs for machine control and interface. General purpose I/O uses a 24VDC supply voltage. The PDM has an internal 24VDC @ 500 mA power supply for this purpose, isolated from the logic common. The 24VDC Common must be tied to machine ground to provide a common ground reference. The 1A fuse, F1, on the PDM protects the internal 24 VDC supply. Pin 1 of the interface connectors P1, P2, and P3, is located at the bottom of the connector and is marked on the front of the PDM.

IMPORTANT The user may supply external 24 VDC power by removing wire jumpers W3 and W4 on the PDM logic board, and connecting the external supply to the +24 VDC and 24 volt common on connectors P1 and P2.

Figure 3.16
PDM control connections

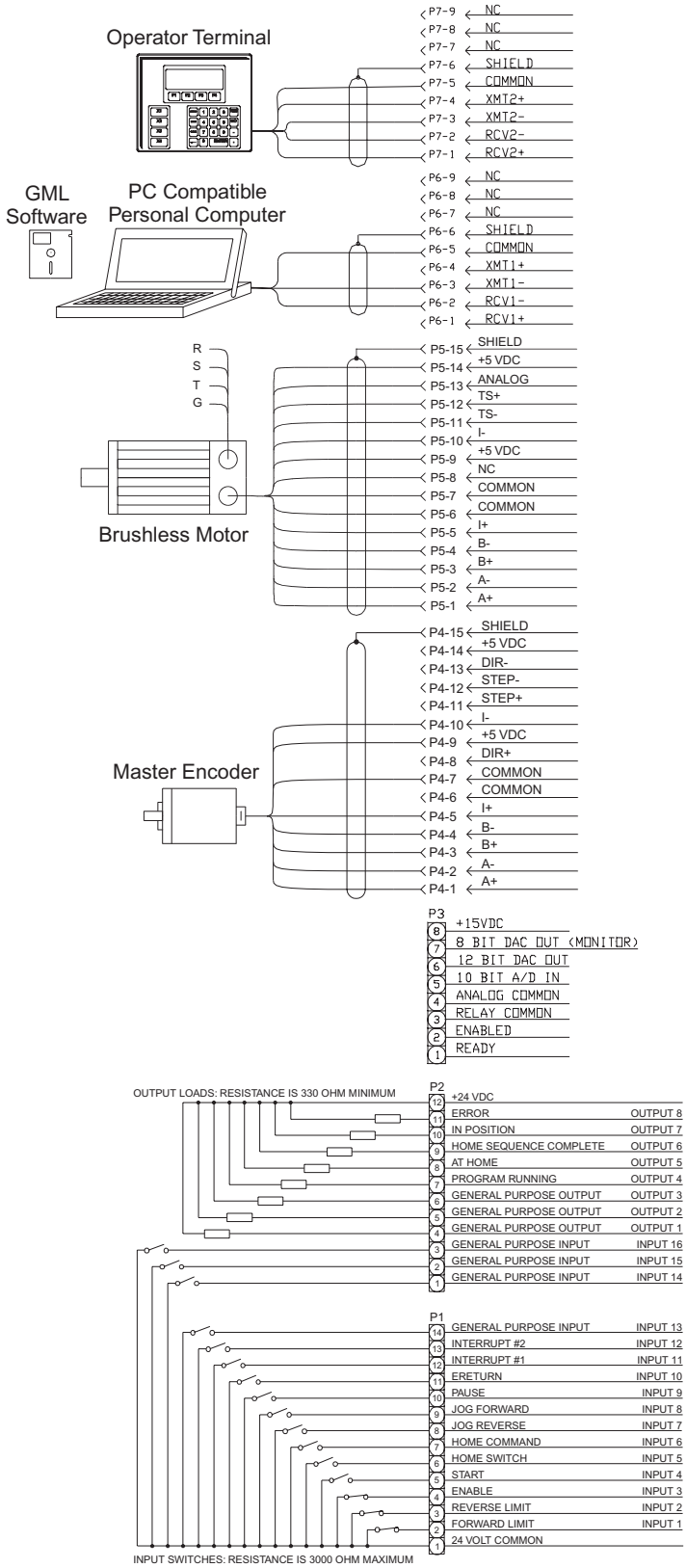

Figure 3.17
Typical Digital I/O wiring

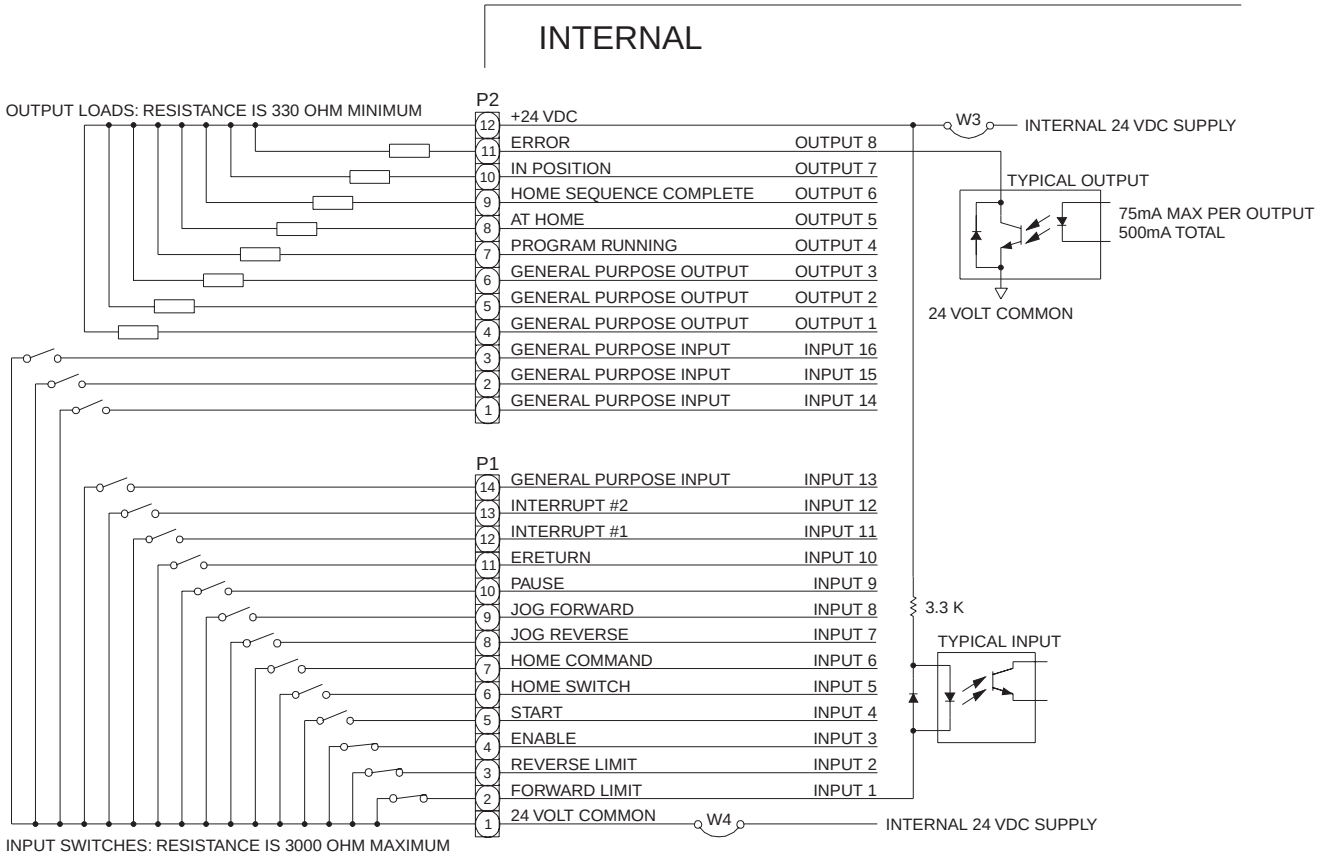

I/F 24V Sourcing

The ULTRA Plus PDM has sinking (active low) I/O which is common in the US, but sourcing (active high) I/O is preferred in Europe. Rockwell Automation/Allen-Bradley offers a DIN rail mounted interface card which converts the I/O from sinking to sourcing (active high). This interface card must be mounted in the same enclosure as the drive.

PDM pin connection with the IF 24V Conversion Card

The interface card is a DIN rail mounting unit that has a terminal strip (1.5mm2 screw clamp type) down each side. The PDM side of the card connects to P1 and P2 connectors on the PDM.

PDM Connector	PDM Pin Number	Wire Color	IF Card Pin Number	Cable Pair
P1 General purpose inputs	1 (24 volt common)	GREEN	1	Pair 1
	2 (Input)	RED	2	Pair 1
	3 (Input)	ORANGE	3	Pair 2
	4 (Input)	BLACK	4	Pair 2
	5 (Input)	RED	5	Pair 3
	6 (Input)	WHITE	6	Pair 3
	7 (Input)	RED	7	Pair 4
	8 (Input)	BLACK	8	Pair 4
	9 (Input)	BLUE	9	Pair 5
	10 (Input)	RED	10	Pair 5
	11 (Input)	BLACK	11	Pair 6
	12 (Input)	YELLOW	12	Pair 6
	13 (Input)	RED	13	Pair 7
	14 (Input)	YELLOW	14	Pair 7

(Continued)

PDM Connector	PDM Pin Number	Wire Color	IF Card Pin Number	Cable Pair
P2 General purpose inputs and outputs	1 (Input)	WHITE	1	Pair 8
	2 (Input)	BLACK	2	Pair 8
	3 (Input)	BLUE	3	Pair 9
	4 (Output)	BLACK	4	Pair 9
	5 (Output)	GREEN	5	Pair 10
	6 (Output)	BLACK	6	Pair 10
	7 (Output)	BROWN	7	Pair 11
	8 (Output)	BLACK	8	Pair 11
	9 (Output)	GREEN	9	Pair 12
	10 (Output)	BLUE	10	Pair 12
	11 (Output)	WHITE	11	Pair 13
	12 (+24 volts)	GREEN	12	Pair 13
	N/A	RED	N/A	Pair 14
	N/A	ORANGE	N/A	Pair 14
	N/A	RED	N/A	Pair 15
	N/A	BROWN	N/A	Pair 15

On the user input side of the I/F card, the I/O requires a separate clean 24VDC nominal supply. There is no galvanic connection from one side of the I/F card to the other and the 24VDC user supply must be grounded on the negative side to the protective earth system. The supply should be between 20 to 30VDC and capable of supplying the loads imposed by the output loading, plus 8 mA for each input used. The supply must be fused adequately to protect the cables used. Output loads must be connected between the output and 24 volt ground and must be 470 ohms or more impedance. The interface outputs are rated at 50mA. Cabling should be 1.5mm2 maximum. The inputs must be supplied by the users input circuit from the user 24 volt positive and each input will sink 8mA when active.

Refer to “I/F Conversion Card” on page B-2 for the interface card and cable (manufacturing) numbers.

Digital Inputs

The optically isolated inputs are connected with an internal pull-up resistor to +24VDC. Making a connection to the 24 volt common (closing a switch) will allow current to flow through the opto-isolator, turning it on. In general, inputs are considered ON in this state, and OFF when there is no connection from the input to 24 volt common. The Forward and Reverse Limit switches are exceptions, with the switch open indicating that a limit has been hit. The Home Switch input parameter defines the Home switch input to be open or closed to indicate the home position, and the PAUSE parameter can select the Pause input as active open or active closed.

The general purpose inputs on the PDM are referred to as I1 through I16 in program statements. Inputs I1 through I10 can be assigned the predefined functions shown in the table below. Inputs I11 and I12 may be used as Interrupt inputs. Inputs I12 to I16 may be used as program select inputs. Any of these input functions may be disabled and the inputs used as general purpose inputs.

In addition to the input functions defined below, other functions may be assigned to any available input. Optional input functions are Hardware Reset, Stop Program, Define Home.

Connector	Pin	Signal Name	Assignable Function (1)
P2 General purpose inputs and outputs	12	+24 VDC	
	3	Input 16	Program Select MSB
	2	Input 15	Program Select
	1	Input 14	Program Select

(Continued)

Connector	Pin	Signal Name	Assignable Function [1]
P1 General purpose inputs	14	Input 13	Program Select
	13	Input 12	Int2 / Program Select
	12	Input 11	Int1 / Program Select
	11	Input 10	Emergency Return
	10	Input 9	Pause
	9	Input 8	Jog Forward
	8	Input 7	Jog Reverse
	7	Input 6	Home Command
	6	Input 5	Home Switch
	5	Input 4	Start Program
	4	Input 3	Enable
	3	Input 2	Reverse Limit
	2	Input 1	Forward Limit
	1	24 VDC Common	

(1) Even if an input is assigned a function, it may be used as a general purpose input.

Digital Outputs

The general purpose outputs are referred to as O1 through O8 in program statements. The outputs are optically isolated and operate on the same 24 volt supply used by the general purpose inputs.

Digital outputs and assignable functions

These outputs are all capable of sinking 75 mA continuously, driven to less than 1 volt. Outputs O6, O7, and O8 are defined respectively as Home Sequence Complete, In Position, and Error Outputs, however, functions may be disabled and the outputs used as general purpose outputs. Optionally, Output O4 may be enabled as a Program Running output, and output O5 may be enabled as an At Home output.

ATTENTION

The ULTRA Plus PDM will not automatically turn outputs OFF.

External circuitry must be used to ensure the state of digital outputs in an emergency stop situation.

Failure to observe this precaution could result in damage to the equipment or severe bodily injury.

Connector	Pin	Signal Name	Assignable Function
P3 Analog I/O and status	12	+24 VDC	+24 VDC
	11	Output 8	Error
	10	Output 7	In Position
	9	Output 6	Home Sequence Complete
	8	Output 5	At Home
	7	Output 4	Program Running
	6	Output 3	
	5	Output 2	
	4	Output 1	P2

Connecting Inputs and Outputs Together

A digital output from a PDM may be connected to an input on the same PDM or another PDM. A single wire connection between the output pin and the input pin is all that is required. If connecting I/O between controllers, the 24 VDC common (P1 pin 1) also needs to be connected between each controller.

Multiple digital outputs may be wired together to form a wire OR connection. If any one of the outputs turns on, the line is pulled low (on). This is useful for

connecting the Error outputs from each axis of a system to a host PLC or machine controller to indicate an error in any of the axes.

Multiple digital inputs may be wired together. If the line is pulled low, all connected inputs will turn on. This is useful for connecting an input on each axis of a system to an output from a host PLC or machine controller to synchronize events.

Analog Input

Figure 3.18 illustrates the Analog to Digital converter (ADC) input, ADC1. Located on P3-5, it may be used to read any analog signal with a range of ±10V.

Analog inputs and signal names

The analog signal ground must be connected to the Analog Common on connector P3-4. The Analog Common is tied to earth ground internally. The 10 bit ADC has a resolution of approximately 20 mV. This analog input may be used as a general purpose analog input or as the feed rate input. Refer to the GML Ultra Software manuals for information about the use of this input.

Connector	Pin	Signal Name
P3 Analog I/O and status	4	Analog Common
	5	Analog Input (ADC1)

Figure 3.18
Analog input and output - typical internal circuits

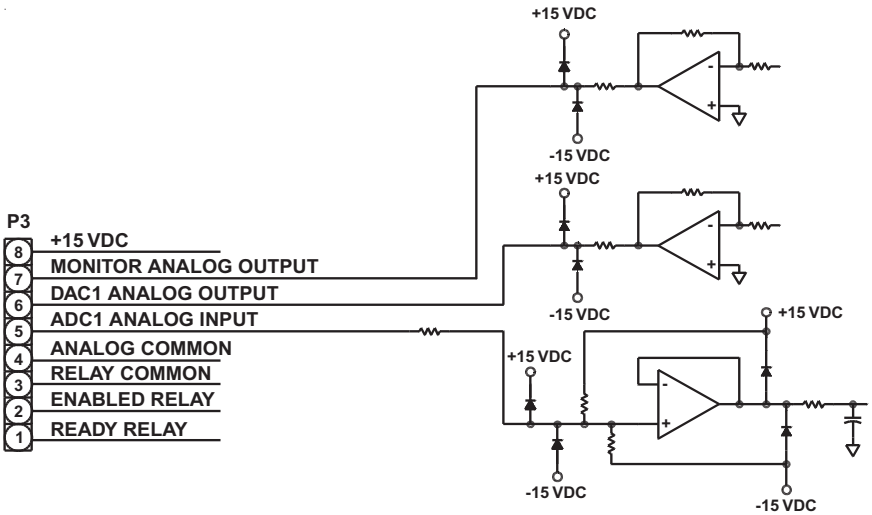

Analog Output

The Digital to Analog Converter (DAC) output, DAC1, on pin P3-6 outputs an analog signal with a range of ±10 volt.

Analog output and signal names

The analog signal ground must be connected to the Analog Common on pin P3-4. The 12 bit DAC has a resolution of approximately 5 mV. Refer to the GML Ultra Software for information about the use of this output.

Connector	Pin	Signal Name
P3 Analog I/O and status	4	Analog Common
	6	Analog Output (DAC)

Monitor Output

The Programmable Monitor output allows a system variable to be monitored. The variable to be monitored is selected in the Monitor menu, Variable Monitor Set Up dialog box.

Monitor output an signal names

The monitor output is a ±10 volt analog signal with 8 bit resolution. Refer to the GML Ultra Software for information about the use of this output.

Connector	Pin	Signal Name
P3 Analog I/O and status	4	Analog Common
	7	Programmable Monitor

Ready Relay Output

See Figure 3.19 on page 3-30 illustrating the Ready output (P3-1), which is a normally open relay contact that closes when the PDM is powered up if no faults exist within the PDM.

Ready relay output and signal names

Relay Common (P3-3) is the common of this contact. This contact is rated 0.3 A at 24 VDC. The Ready output will open if a system fault occurs.

Connector	Pin	Signal Name
P3 Analog I/O and status	1	Ready (Relay output)
	3	Relay Common

Figure 3.19
Enable and Ready Relay - Typical Internal Circuits

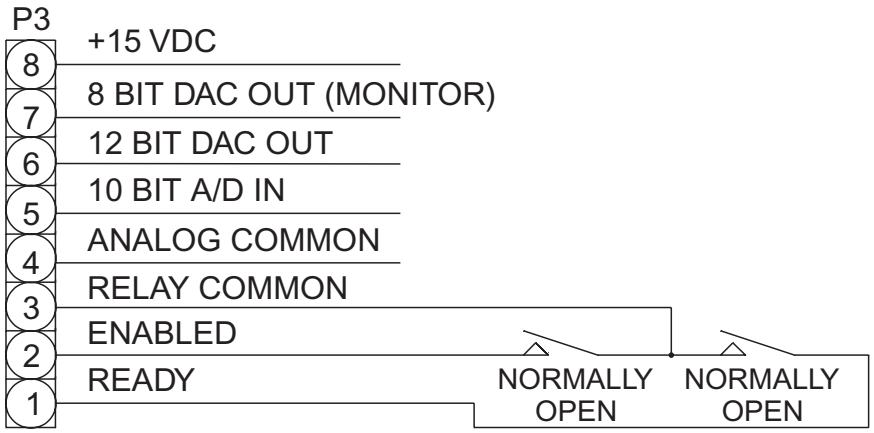

Enabled Relay Output

The Enabled output (P3-2) is a normally open relay contact. The Enabled output closes when the PDM is enabled, and opens when the PDM is disabled.

Enabled relay output and signal names

Relay Common (P3-3) is the common of this contact. This contact is rated 0.3 A at 24 VDC.

ATTENTION

The ULTRA Plus PDM will not automatically turn outputs OFF.

External circuitry must be used to ensure the state of digital outputs in an emergency stop situation.

Failure to observe this precaution could result in damage to the equipment or severe bodily injury.

Connector	Pin	Signal Name
P3 Analog I/O and status	2	Enabled (Relay output)
	3	Relay Common

The PDM provides interfaces for two separate encoder feedback connections. The PDM will accept encoder inputs at a maximum frequency of 750 kHz on a single channel (A or B) for encoders with phase error of less than or equal to 45 degrees. There is a four times multiplier on the encoder input to the PDM on both the encoder 1 and encoder 2 inputs, so four encoder counts is equivalent to one encoder line. With a standard 2000 line encoder, the PDM will count 8000 encoder pulses per revolution.

The PDM will accept differential (line driver) quadrature signals from a 5 volt incremental encoder. As illustrated in Figure 3.20, the PDM accepts A, B, and I (Index) signals from the encoder, with A leading B for clockwise rotation facing the motor drive shaft. Connections are provided for A+, A-, B+, B-, I+, I-, +5 VDC, and common signals.

Figure 3.20
Encoder input circuitry example

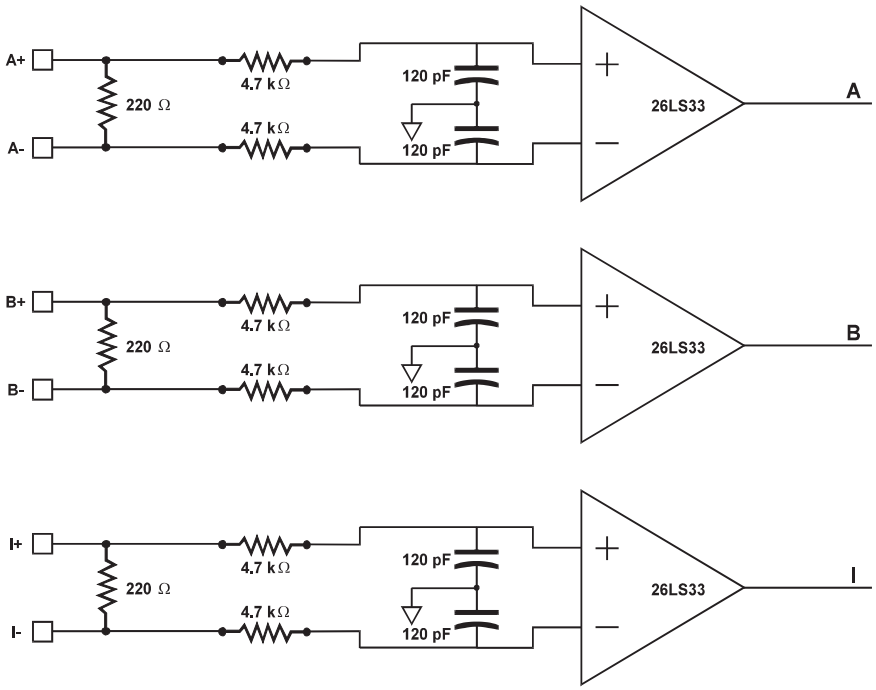

Encoder 1

Figure 3.21 illustrates the connections of Encoder 1, which must connect to the encoder mounted to the motor. This is the only motor mounted feedback necessary for control of the motor velocity. This encoder is also normally used for position feedback.

Encoder 1 and signal names

The Encoder 1 interface also includes connections for the normally closed thermostat in the motor windings, and for an analog start-up signal required for proper operation.

Connector	Pin	Signal Name
P5 Encoder input 1	1	A+
	2	A-
	3	B+
	4	B-
	5	I+ (Index)
	6	Common
	7	Common
	8	No connection
	9	+5 VDC
	10	I- (Index)
	11	TS- (thermostat)
	12	TS+ (thermostat)
	13	Analog (absolute position)
	14	+5 VDC
	15	Shield

Figure 3.21
Encoder 1 connections

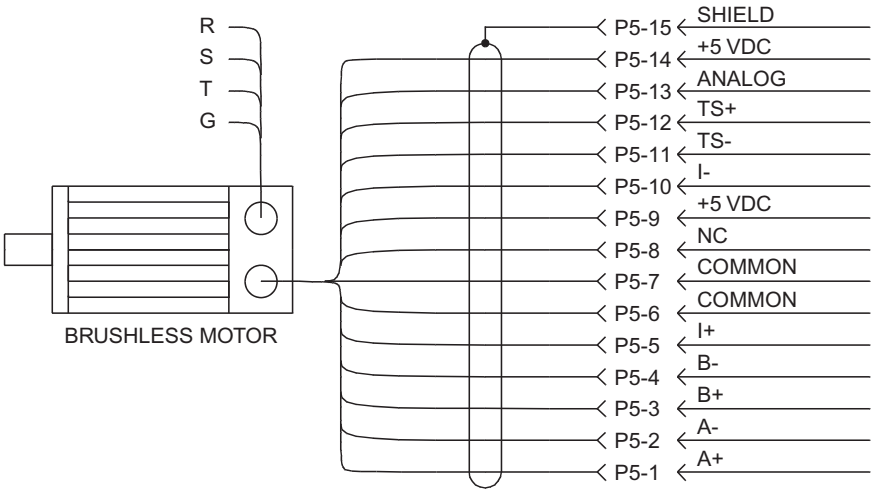

Encoder 2

See Figure 3.22 on page 3-36 showing the connections of Encoder 2, which provides an optional second encoder. It can be used as position feedback directly from the load, or as a master input for relative positioning, master-follower systems, or for electronic gearing.

As an alternative, the Encoder 2 port may also be used to output encoder 1 signals when only the motor mounted encoder is used. The function of the Encoder 2 port is selected as input or output.

Encoder 2 and signal names

The PDM will accept differential (line driver) quadrature signals from a 5 volt incremental encoder. The PDM accepts A, B, and I (Index) signals from the encoder, with A leading B for clockwise rotation. Connections are provided for A+, A-, B+, B-, I+, I-, +5 volts, and common signals. The I+ and I- signals do not need to be connected if not needed.

The Encoder 2 signal wires to the PDM should be shielded. The shield should be connected only at the encoder end. However, in some applications it may be necessary to connect the shield at the PDM end of the cable also. Connector P4 includes a separate pin (Pin 15) for this purpose. Refer to "ULTRA Plus PDM P4 or P5 to Auxiliary Encoder (Unterminated) (P/N 9101-2031)" on page 3-50.

Connector	Pin	Signal Name
P4 Encoder input 2	1	A+
	2	A-
	3	B+
	4	B-
	5	I+ (Index)
	6	Common
	7	Common
	9	+5 VDC (250 mA maximum)
	10	I- (Index)
	15	Shield

Figure 3.22
Encoder 2 connections

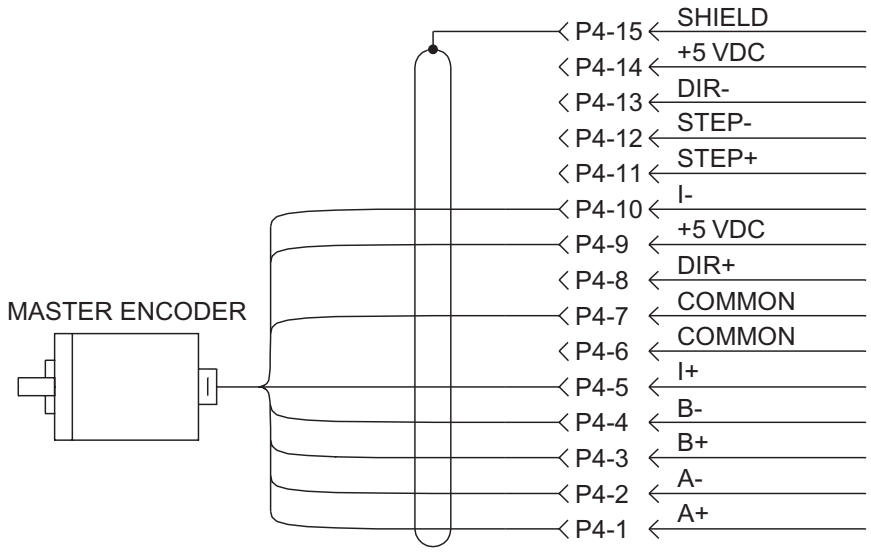

Slaving an ULTRA Plus PDM to Another

In applications where an ULTRA Plus PDM needs to "follow" another ULTRA Plus PDM using electronic gearing, the P4 connections may be used to provide a simple method of wiring the motor encoder signals from the master ULTRA Plus PDM to the Encoder 2 input of the follower (slave) ULTRA Plus PDM. The master ULTRA Plus PDM needs to be configured to output its motor encoder signals on P4. A standard cable is available for this purpose. Refer to "ULTRA Plus PDM P4 to P4, 2 foot (P/N 9101-2127)" on page 3-51.

Step and Direction Inputs

Figure 3.23 illustrates connections of the PDM, which can accept step and direction inputs on P4. These inputs provide a standard interface to an indexer. If the step and direction inputs on P4 are used, the Encoder 2 port may still be used as Encoder 1 out, but not for connections to an auxiliary encoder input.

Step and direction inputs and signal names

The step and direction inputs require a source to drive a 10 mA load at 5 VDC. TTL levels are compatible as long as the input current is sufficient. These optically isolated inputs are suitable for open-collector drivers on the inputs. The source of the step and direction signals must provide power for the opto-isolators as well as step and direction signals. The figure below illustrates the connections for active high and active low signals to the step and direction inputs.

Connector	Pin	Signal Name
P4 Encoder input 2	8	DIR+
	11	STEP+
	12	STEP-
	13	DIR-
	15	Shield

Figure 3.23
Step and direction input connections

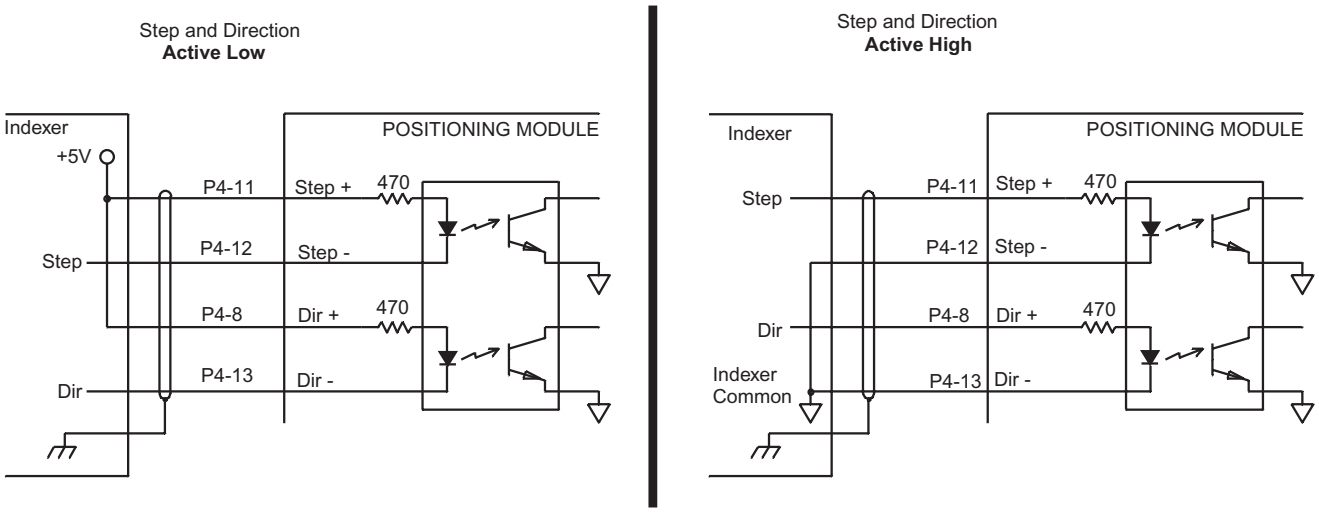

The input resistance provides the proper current limit for a +5 VDC signal. External resistance in series with the step and direction lines to limit current to 10 mA allows operation with voltages greater than 5 VDC.

$$RE = \frac{\text{Vcc} - 1.8}{10} - 0.470$$

RE = External resistance ($k\Omega$)

Vcc = Signal Voltage

The step input is active low and will accept a square wave input with a maximum frequency of 800 kHz. The direction input is high for motion in the forward direction. The direction input should change a minimum of 4 microseconds before the first step pulse in that direction.

The distance moved given an input of N step pulses is a function of the software gear ratio set in the PDM. The number of encoder counts moved is:

$$\text{Motor Encoder Counts} = (\text{N step pulses})\left(\frac{a}{b}\right)$$

Motor Encoder Counts = The distance the motor moves

N step pulses = The number of pulses from an indexer

$\frac{a}{b}$ = The software gear ratio

The signal wires from the indexer should be shielded, and the shield connected to the chassis of the device generating the signals. In some cases it may be necessary to connect the shield at the PDM end of the cable, at P4-15.

Serial Port Connections

There are two serial ports on a PDM. Serial 1 Auxiliary (P7) and Serial 2 Computer (P6). The Operator Terminal is connected to the PDM through Serial port P7. Serial port P6 is used as the programming port for a PC that is running GML Ultra Software. SP6 is also the serial port used for Host communications.

Data may be sent to, or received from either serial port by an application program. The application may use a PRINT statement to send data and a READ statement to receive data. Refer to the GML Ultra Software manuals for detailed information.

Several parameters select the operating mode for serial communications. Both ports support either RS-232C or RS-422 communications. The ports operate at baud rates of 1200, 2400, 4800, 9600, or 19200. Refer to the GML Ultra Software manuals for detailed information.

The default setup for the serial ports is:

- 9600 baud
- No parity
- 8 data bits
- 1 stop bit
- Handshaking ON
- RS-232C protocol

Host Computer

Serial 2 Computer (P6) provides the communication interface between the PDM and the personal computer used for programming and configuration. This is also the serial port that must be used for Host communications.

Host computer and signal names

One or more ULTRA Plus PDMs may be installed on an RS-422 multi-drop network or an RS-232 daisy-chain network. If more than one ULTRA Plus

PDM is in the network, each must have a unique address selected on the SW1 dip switch. Refer to "Networking" on page 3-44 for more information.

Connector	Pin	Signal Name	
		RS-232	RS-422
P6 Serial Port 2	1	No connection	RXD+
	2	RXD	RXD-
	3	TXD	TXD-
	4	No connection	TXD+
	5	Common	Common
	6	Shield	Shield

Figure 3.24 shows typical RS-232 connections between a personal computer (PC) and the Serial port P6 on the PDM. These diagrams illustrates the connections required for programming a single PDM.

Figure 3.24
Personal Computer RS-232 connections

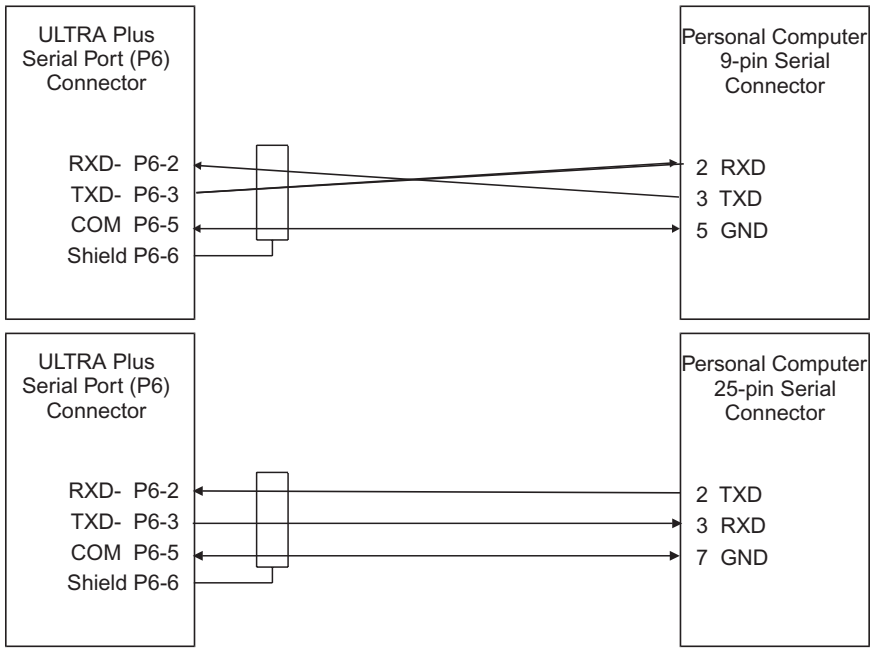

Refer to "Networking" on page 3-44 for RS-422 connections between an ULTRA Plus PDM and the host computer.

Operator Terminal

1398-HMI-002

The optional Operator Terminal connects to the PDM through Serial port 1 (P7). The cable connects to the COM1 connector on the back of the Operator terminal.

P7 at Serial Port 1 on PDM

In the default configuration, the PDM expects an 1398-HMI-00X Operator Terminal to be connected, so if a another terminal is used, the PDM must be configured properly. Refer to the GML Ultra Software manuals..

PDM Connector	Pin	Signal Name	
		RS-232	RS-422
P7, Serial Port 1	1	No connection	RXD+
	2	RXD	RXD-
	3	TXD	TXD-
	4	No connection	TXD+
	5	Common	Common

COM1 connector on the back of the Operator Terminal

The COM1 connector is a twenty-five pin male D connector. The Operator Terminal may be wired using RS-232C for distances up to 15 meters (50 feet). For longer distances, RS-422 should be used. Refer to the GML Ultra Software manuals for details on configuring Serial port (P7) for RS-422 use.

Operator Terminal Connector	Pin	Signal Name
COM1	1	Chassis ground
	2	TXD (RS-232 transmit)
	3	RXD (RS-232 receive)
	14	TXD+ (RS-422 transmit)
	15	TXD- (RS-422 transmit)
	16	RXD+ (RS-422 receive)
	17	RXD- (RS-422 receive)
	7	Signal ground

Figure 3.25
Operator Terminal RS-232 connections

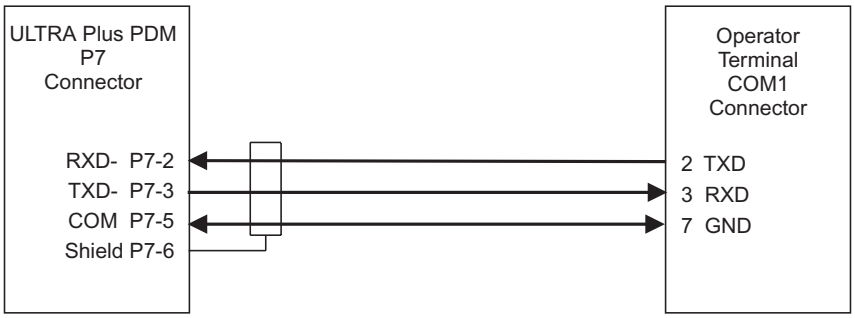

Figure 3.26
Operator Terminal RS-422 connections

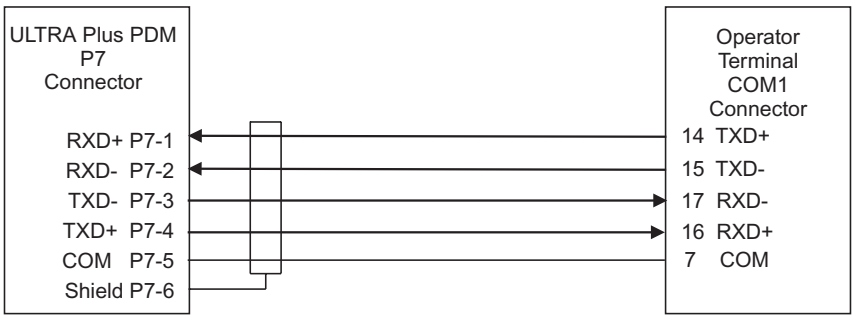

1398-HMI-003 ULTRA Plus PDM (P7, Serial 1 Auxiliary)

The ULTRA Plus PDM connects to the Operator Terminal. The connection can be wired using RS-232 for distances up to 15 meters (50 feet).

Pin	Signal names	
	RS-232	**RS-422**
1	No connection	RxD+
2	RxD	RxD-
3	TxD	TxD-
4	No Connection	TxD+
5	Common	Common
6	Shield	Shield
7	No connection	
8	No connection	
9	No connection	

Operator Terminal (screw terminal on back) .

Pin and Signal names			
Pin	**RS-232**	**Pin**	**RS-422**
1	Tx	6	TxA
2	RxD	7	TxB
3	RTS	8	RxA
4	CTS	9	RxB
5	Common	10	Common

Figure 3.27
ULTRA Plus PDM connects to the Operator Terminal

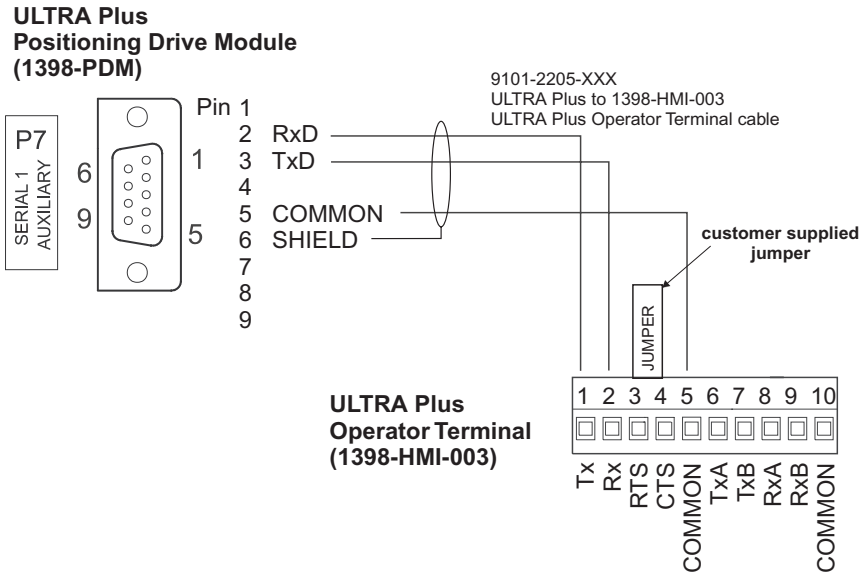

IMPORTANT A jumper (customer supplied) must be installed between pins 3 and 4 of the ULTRA Plus Operator Terminal for RS-232 operation.

Networking

ULTRA Plus PDM Controls

One or more PDMs may be installed on an RS-422 multi-drop network or an RS-232 daisy-chain network. If more than one PDM is on the network, each PDM must have a unique address selected on the SW1 DIP switch panel, which is illustrated in Figure 3.28.

Figure 3.28
Dip Switch SW1

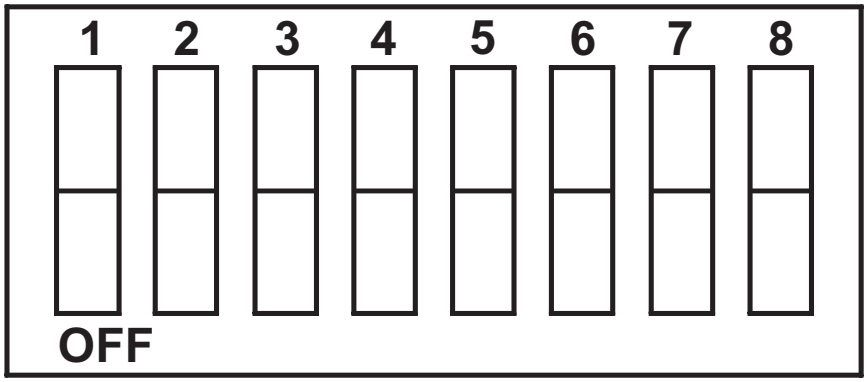

Figure 3.29 illustrates the dip switch setting for address 5. Switches SW1-1 through SW1-6 are used to select the address. Switch SW1-1 is the least significant bit and SW1-6 is the most significant bit of the binary address. If the address is set to anything other than 0, the PDM will not communicate until its address has been selected (use Axis Select under the Communications menu). Changing the address on the dip switch will not be recognized by the PDM until a Hard Reset is performed (or power is removed).

Figure 3.29
Dip Switch SW1 set for address 5 example

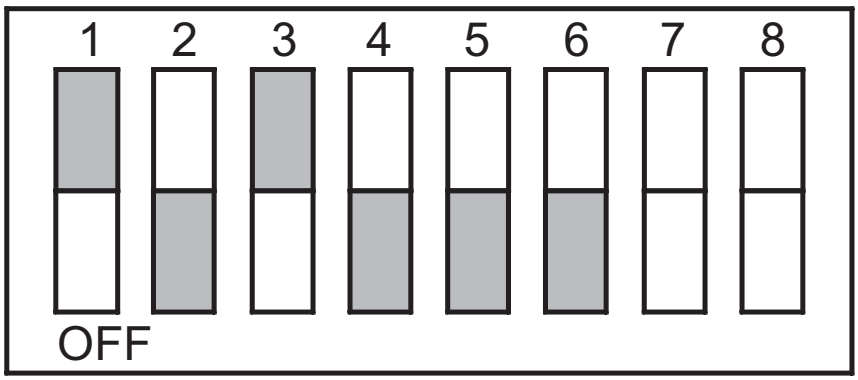

See Figure 3.29 on page 3-44 showing the setting of SW1-7 ON for the daisy-chain mode. Switch SW1-7 is used to select the mode of operation of the serial port 1. If SW1-7 is OFF, serial port 1 functions as an independent serial

port. If SW1-7 is ON, serial port 1 and serial port 2 are linked together (daisy-chained). Any data that is received on one serial port is automatically transmitted out the other serial port.

Figure 3.30
Dip Switch SW1-7 set ON for daisy-chain mode example

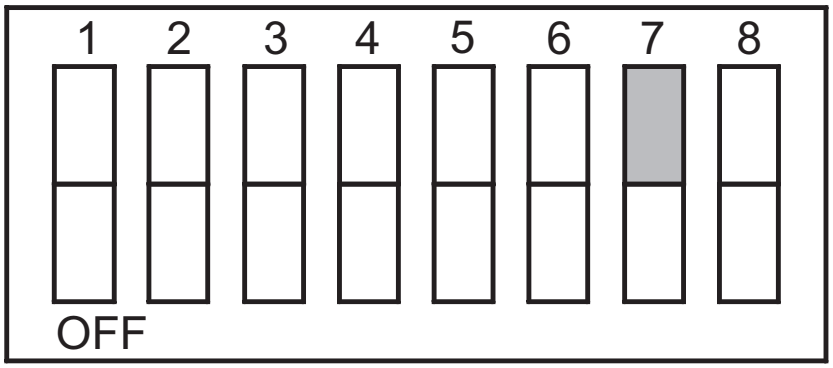

Switch 8 on the DIP switch is not used. The PDM is shipped with all switches set to OFF, for independent operation of the serial ports and the address set to 0. If there is only one PDM in the system, all of the switches on DIP switch SW1 should be OFF.

RS-422 Multi-Drop

See Figure 3.31 on page 3-46 illustrating the connections needed for multiple PDMs, which can be linked with an RS-422 multi-drop configuration. Remember to set a different address on DIP switch SW1 for each PDM on the RS-422 network. The cable used for these connections should be 22 AWG twisted pair with an overall shield grounded at one point.

Figure 3.31
RS-422 Multi-drop connections

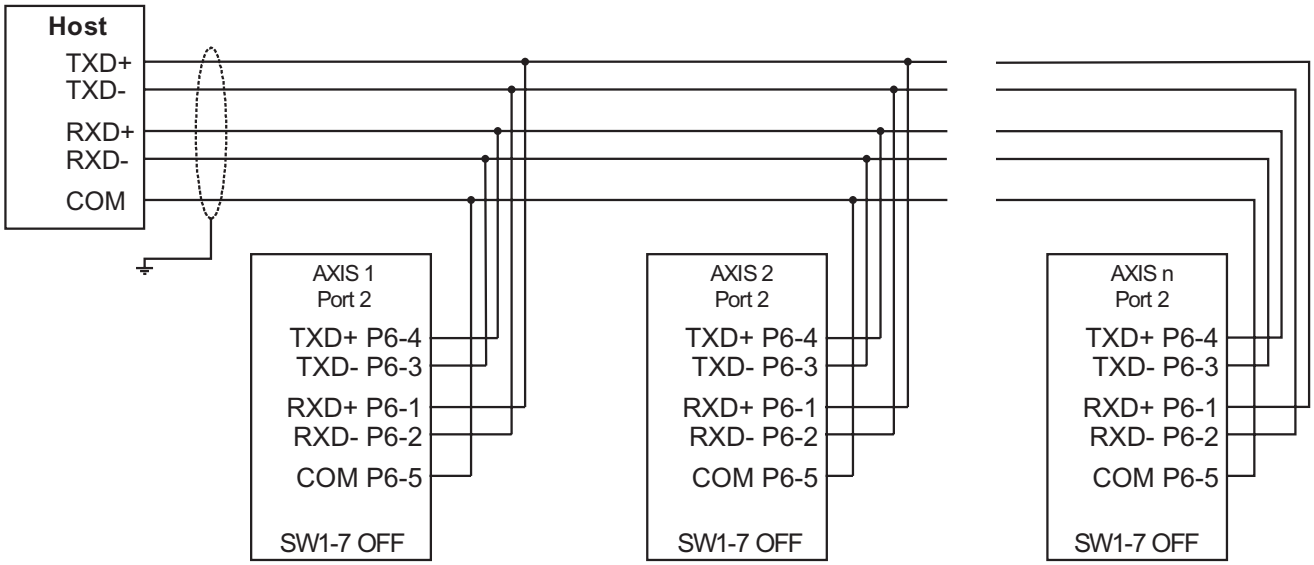

RS-232 Daisy-Chain

The two serial ports can also operate as one port with the transmit and receive lines fed through for multiple connections. Switch 7 on DIP switch SW1 selects the independent or daisy-chain operation of the two serial ports. Remember to set a different address for each PDM in the chain. The cable used for these connections should be 22 AWG twisted pair with an overall shield grounded at one point.

Figure 3.32
RS-232C Daisy-chain connections

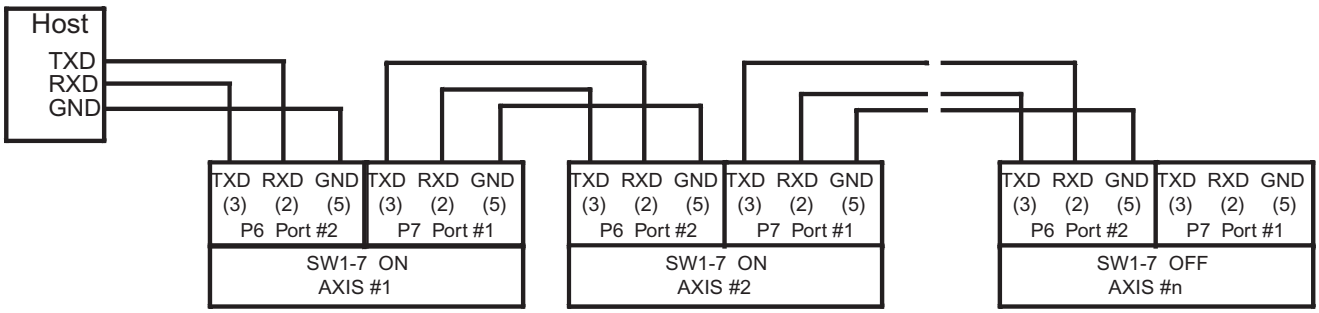

Operator Terminal (1398-HMI-002)

Figure 3.33 illustrates an additional option, which is to connect one Operator Terminal to multiple PDMs. This method requires RS-422 connections as shown in the following drawing. A PDM may be selected from the terminal by using the NO key followed by the numeric key corresponding to the PDM Operator Terminal address which must be set up in GML Ultra Software.

Figure 3.33
Operator Terminal RS-422 multi-drop connections

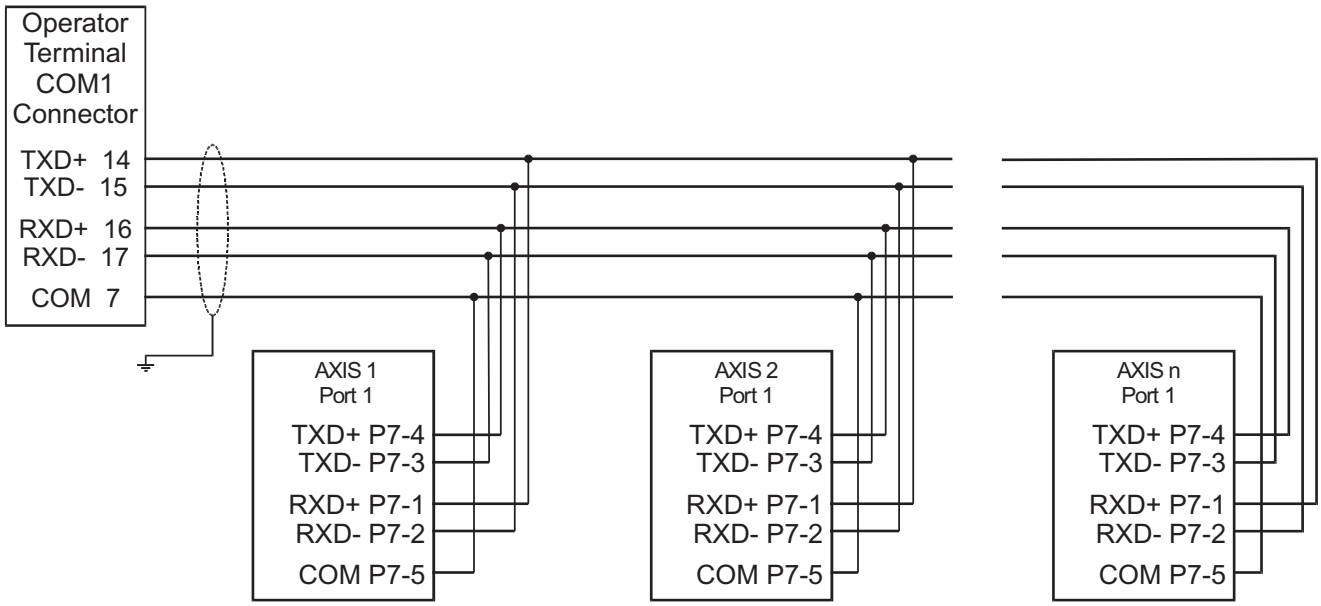

Operator Terminal (1398-HMI-003)

One Operator can connect to multiple ULTRA 100 Series Drives. This method requires customer supplied RS-422 cable connections. A particular ULTRA Plus PDM may be selected from the terminal by using the "NO" key followed by the numeric key corresponding to the ULTRA Plus PDM address. Refer to the GML Ultra Software manual for further details.

Figure 3.34
ULTRA Plus PDM RS-422 multiple drop connections

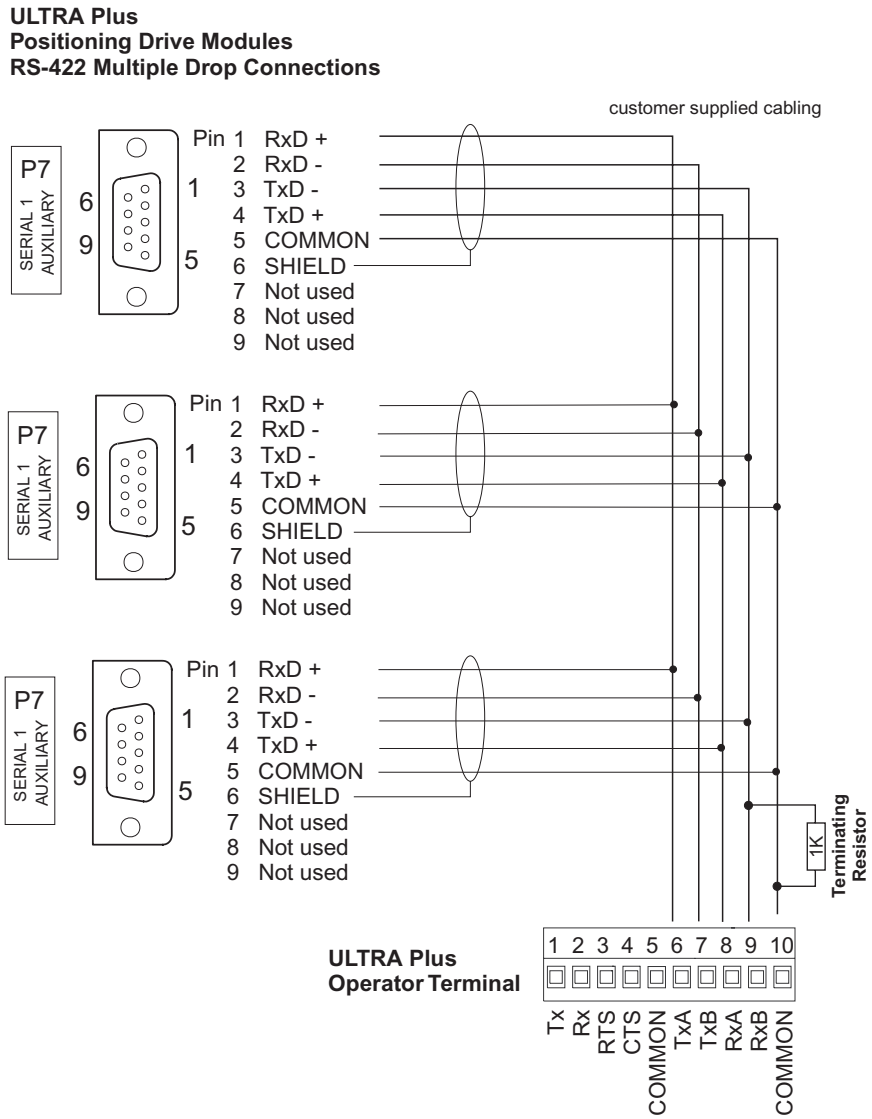

IMPORTANT The 1k W 1/4 watt terminating resistor is used for noise suppression.

Cables

Refer to Motor Connectors on page B-6 for ordering information about these and other cables.

Figure 3.35
ULTRA Plus PDM P7 to Operator Terminal (P/N 9101-2205)

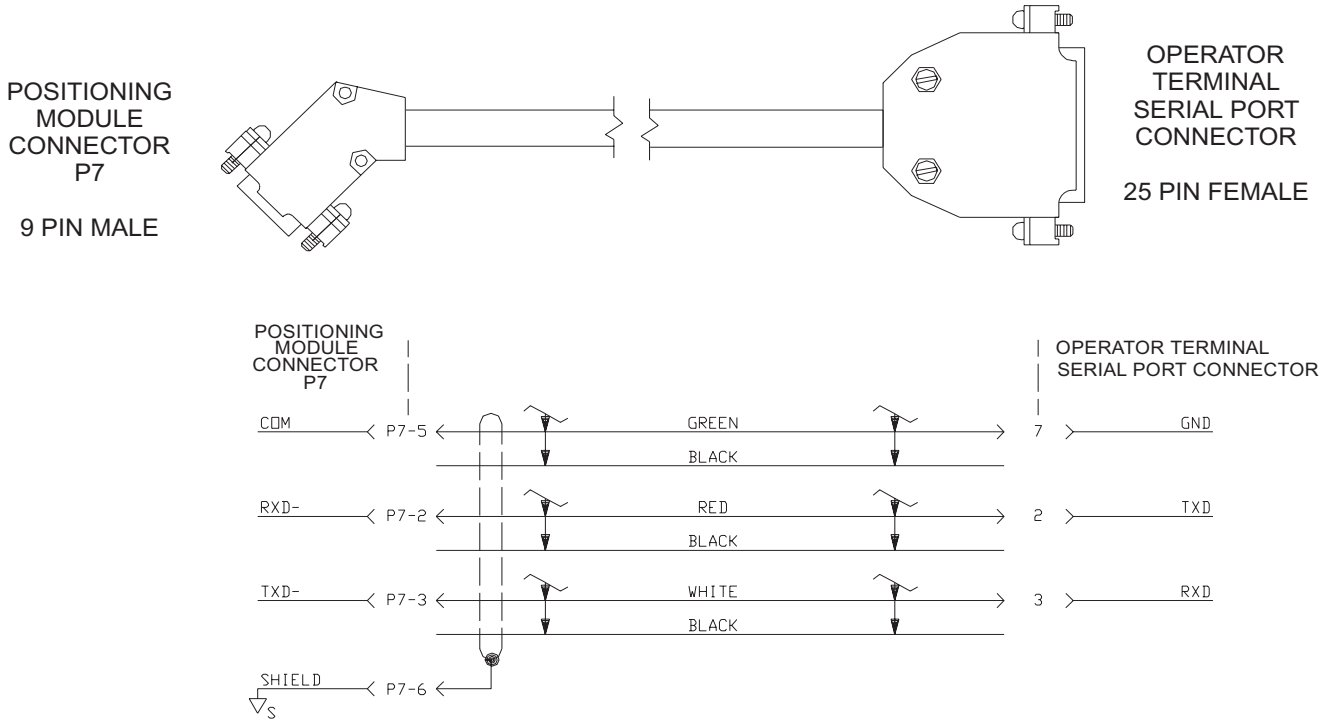

Figure 3.36
ULTRA Plus PDM P6 to PC Serial Port (9 pin) (P/N 9101-2024)

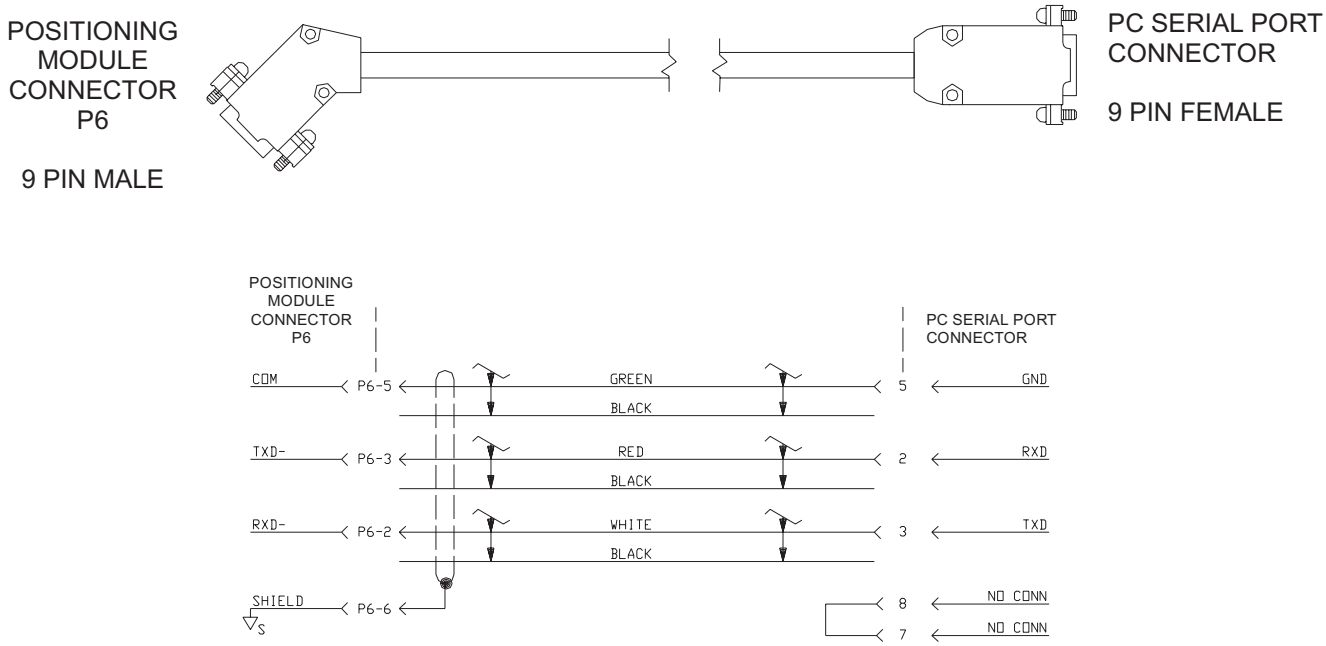

Figure 3.37
ULTRA Plus PDM P4 or P5 to Auxiliary Encoder (Unterminated) (P/N 9101-2031)

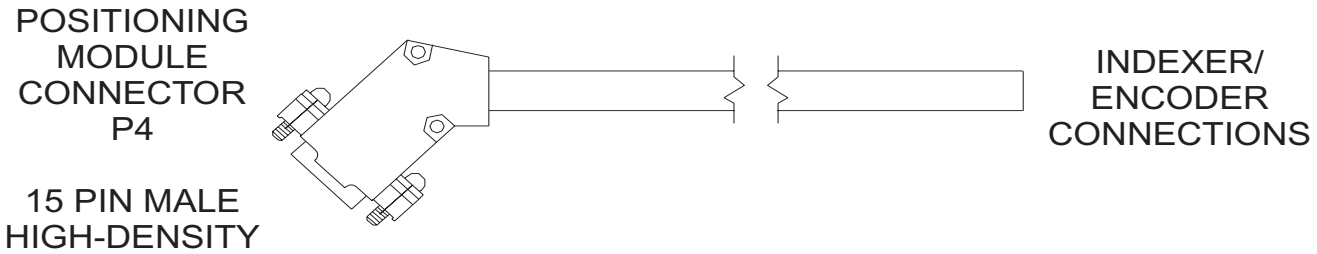

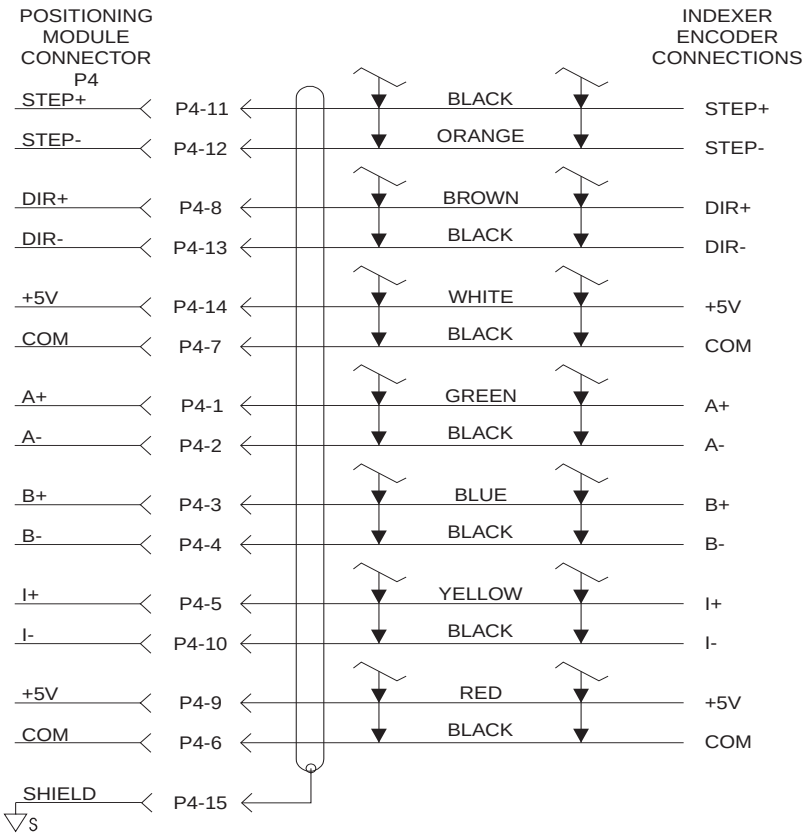

Figure 3.38
ULTRA Plus PDM P4 to P4, 2 foot (P/N 9101-2127)

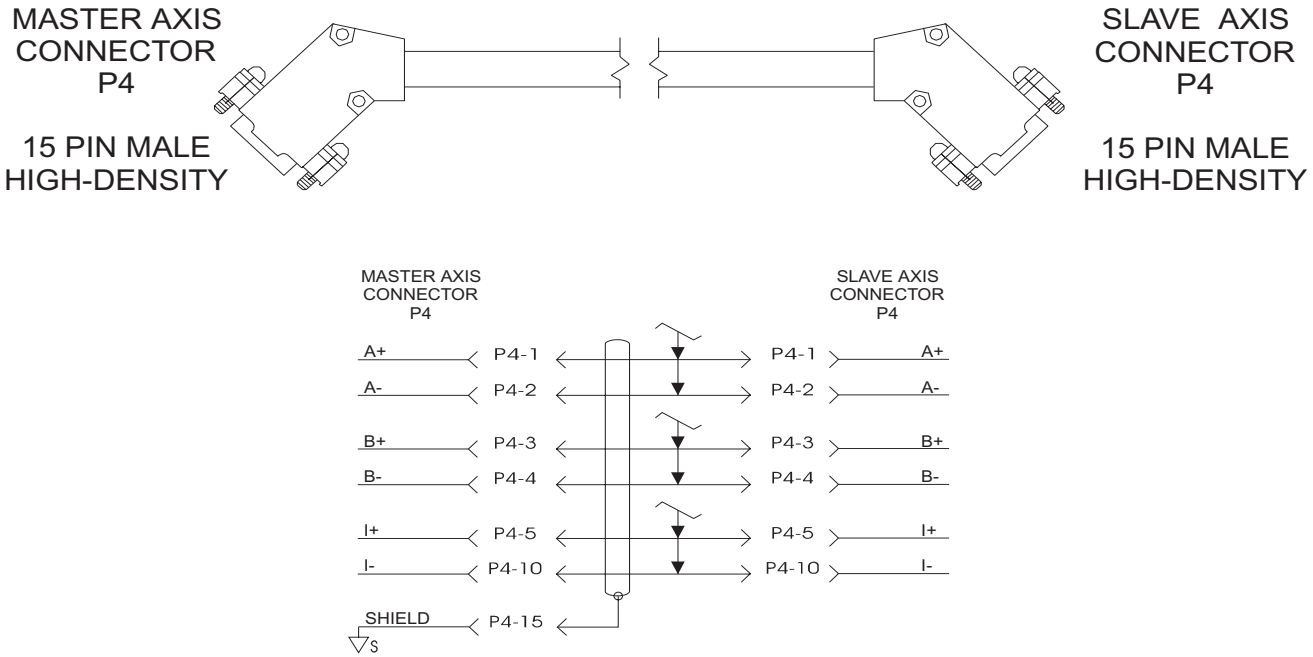

Figure 3.39
ULTRA Plus PDM P5 to H, or F-Series Motor Encoder (P/N 9101-2027)

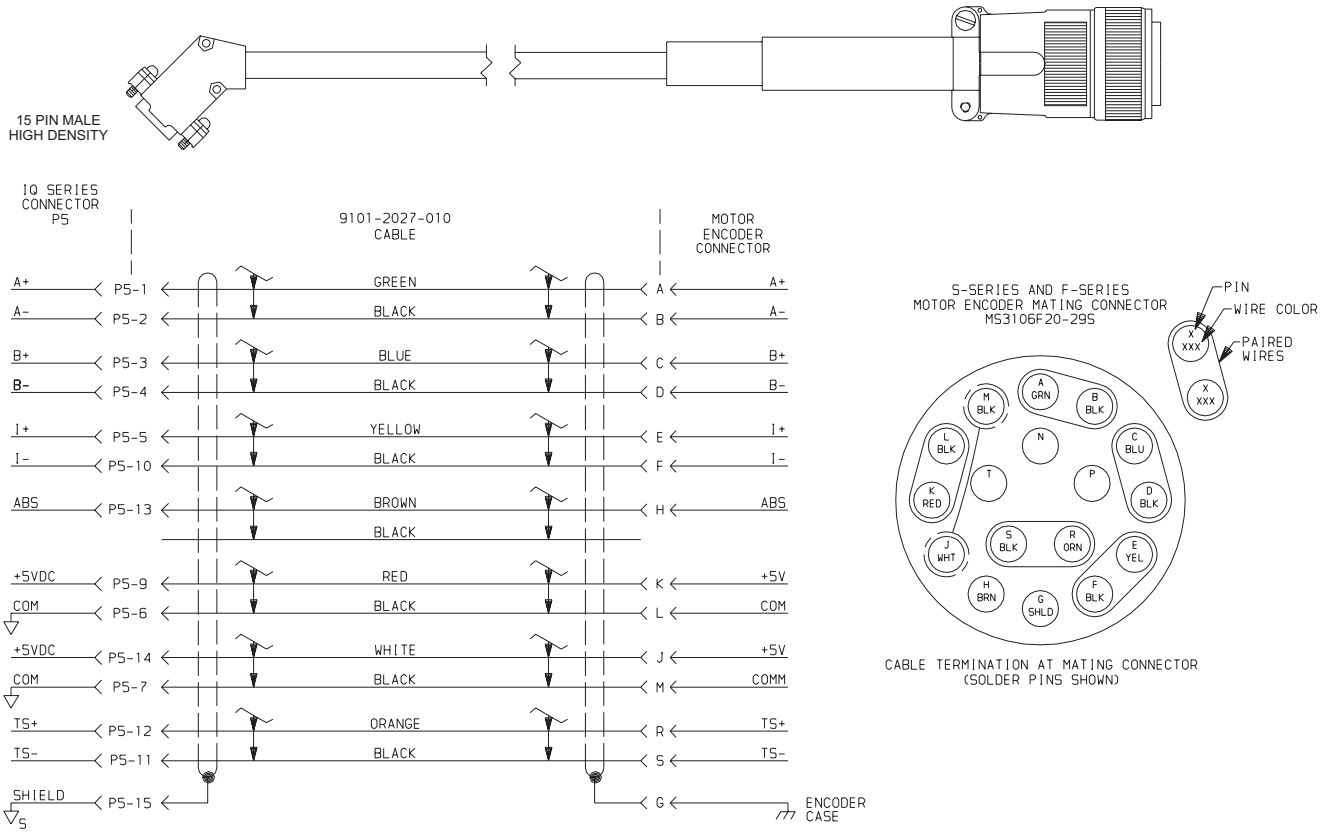

Figure 3.40
ULTRA Plus PDM P5 to N-Series Motor Encoder (9101-1474)

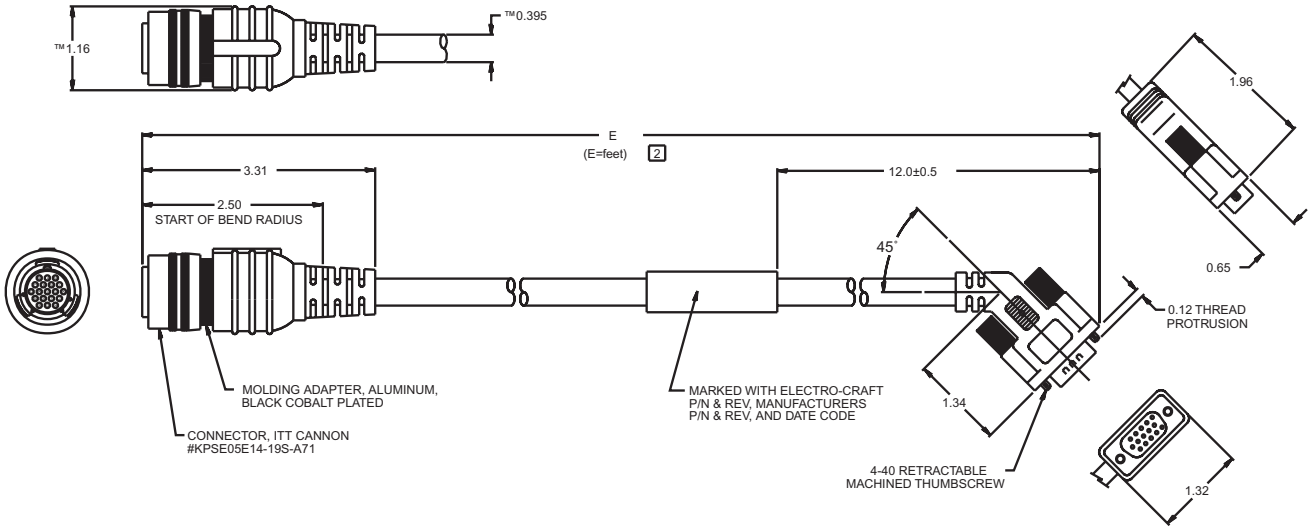

WIRING DIAGRAM

KPSE05E14-19S-A71
CONNECTOR
(FACE VIEW)

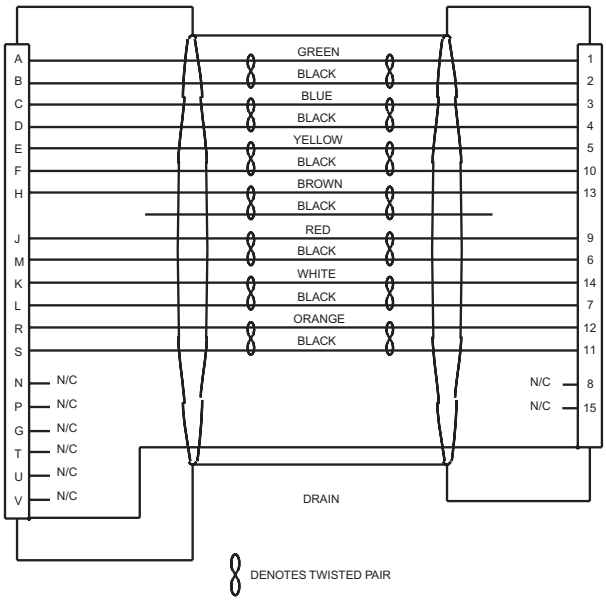

CONNECTOR BACKSHELL SHIELDED 360˚ (BOTH ENDS)

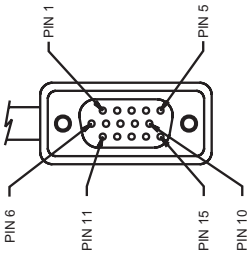

15 POSITION HIGH DENSITY 45˚ 'D'-SUB PLUG
WITH MALE PIN CONTACTS
(FACE VIEW)

Apply Power for the First Time

Outlined below are the steps that should be followed when applying power to the equipment for the first time. This procedure covers the ULTRA Plus PDM Motor, and Operator Terminal. Refer to and become familiar with the following publications before installing and using GML Ultra Software:

- 1398-5.10 *GML Ultra Getting Started Manual*,
- 1398-5.11 *GML Ultra User Manual*, and
- 1398-5.12 *GML Ultra Reference Manual*.

These start-up procedures assume that the equipment is properly mounted and wired, but power has not been applied. The instructions also assume that a PC (with GML Ultra loaded into the default directory c:\ult) is connected to the unit.

You can start GML Ultra Software by double clicking on the GML Ultra Software icon.

1398-PDM-10, 20, 30, 75, and 150B

ATTENTION

High voltage is present on the terminals of the ULTRA Plus PDM.

After removing power, check for remaining voltage before making or removing any connection.

Failure to observe this safety procedure could result in personal injury or damage to equipment.

1. Prior to applying power to the ULTRA Plus PDM, ensure that the supply voltage is in the proper range (100–240 VAC).

2. With power off, ensure that proper connections are made, as listed below:

ULTRA Plus PDM	Phasing of Power Source	Phasing Connections
1398-PDM-10, 20, and 30	Single	Arbitrary between L1 and L2/N
1398-PDM-075	Single	Arbitrary between L1 and L2/N
1398-PDM-075 and 150	Three	Arbitrary between L1, L2/N and L3

If auxiliary power is used, ensure proper connections are made to terminals L1 AUX and L2/N AUX.

3. With input power still off, disconnect motor leads from ULTRA Plus PDM terminals R, S, and T. Verify with an ohmmeter that the resistance between ULTRA Plus PDM terminals R to GND, S to GND, and T to GND is above 500k ohms. If the resistance is acceptable, reconnect the motor leads to the ULTRA Plus PDM terminals marked R, S, and T.

4. Connect all interface cables (P1–P7) to the PDM.

ATTENTION

Perform the initial power-up with the motor shaft disconnected from a load and the shaft key removed.

Improper wiring or undiscovered shipping damage could result in undesired motor motion. Be prepared to remove power if excessive motion occurs.

5. Make sure that the motor is disconnected from the load before applying power. This prevents mechanical damage should a fault occur.

6. Apply input power and check the LEDs.

a. The green DC BUS LED should turn on to indicate power is applied.

b. The bicolor STATUS LED should turn green.

IMPORTANT

The PDM is in a fault condition if the STATUS LED is red. Continue with the following instructions and perform Step 9 to clear any faults.

7. Select **Online** from the Diagram menu to display the Online Manager window.

8. Initialize and load the appropriate Personality Module files for the PDM

and motor combination as follows:

a. Select **Enter Setups** from the Online Manager window to display the Axis Setups dialog.
b. Select **Initialize PM** and **Execute** to display the Initialize PM dialog.
c. Select the appropriate ULTRA Plus PDM type from the Drive list.
d. Select the appropriate motor type from the Motor list.
e. Verify the Encoder list displays the correct line count for the motor.
If necessary, select the proper encoder resolution value.
f. Select **Update PM** to initialize the Personality Module with the specified drive and motor parameters.
g. After the Personality Module is properly initialized, select **Yes** to reset the PDM and exit the Update PM dialog.
h. Select **Cancel** to exit the Axis Setups dialog.

9. If the STATUS LED is red perform the following steps:

a. Select Enter Setups to access the Axis Setups dialog.
b. Select **I/O Status Monitor** and press **Execute** to view the I/O Status Monitor which displays the fault.
c. Correct any fault conditions. Refer to Error Messages and Error Output on page 5-4 for diagnostic assistance.
d. Close the I/O Status Monitor.
e. Select **Cancel** to exit the Axis Setups dialog.
f. Double click the Reset Drive block in the Online Manager command window to reset the ULTRA Plus PDM.
g. Verify the STATUS LED is green.
If the STATUS LED is red, return to Step a.

10. Verify the fan is operating by checking that air is blowing from the top of the ULTRA Plus PDM.

11. Disable the ULTRA Plus PDM by performing one of the following:

a. Turn the Enable input OFF, or
b. Double click on the Feedback block to access the Feedback dialog.
Set State = **OFF** and select **Execute**. Select **Cancel** to exit the dialog.

12. Select **Enter Setup**s to access the Axis Setups dialog from the Online Manager window.

13. Verify the encoder increments and decrements properly as follows:

a. Select **Encoder Test** and **Execute** from the Axis Setups dialog to display the Encoder Test dialog.
b. Select **Zero Counts** to reset the Count value to 0.
c. Rotate the motor shaft clockwise and verify that the Count value increases.
d. Rotate the motor shaft counterclockwise and verify that the Count value decreases.

e. Select **Cancel** to exit the Encoder dialog.

14. Select **Close** to exit the Axis Setups window.

15. Enable the ULTRA Plus PDM by performing one of the following:

- Turn the Enable input ON, or
- Double click on the Feedback block, set State = **ON** and select **Execute**. Select **Cancel** to exit the dialog.

16. Verify the motor is stationary and has holding torque.

17. Command motion and verify the motor rotates in the proper direction by performing one of the following steps:

- Enable the jog inputs, or
- Double click on the Jog Axis block in the Online Manager window to access the Jog Axis dialog. Select **Execute** from the Jog Axis dialog to rotate the motor. The direction and speed of rotation may be changed in the Jog Axis block. Select **Cancel** to exit the Jog Axis dialog.
- Select **ESTOP** in the Online Manager command window to halt motion, stop program execution and set Feedback = OFF.
- Remove input power. The LEDs should turn off within ten seconds.

1398-PDM-25, 50, 100, and 150

Start-up of an ULTRA Plus PDM system involves starting a Power Supply Module (PSM) and at least one ULTRA Plus PDM. The PSM is checked first and then the PDMs. Perform the start-up procedure on all the PDMs attached to the PSM at the same time.

ATTENTION

Dangerous voltages may exist after power is removed!

Check DC bus voltage each time power is removed before working on the Power Supply Module or ULTRA Plus PDM.

Power Supply Module

1. Prior to applying power to the PSM, ensure that the supply voltage is in the proper range (120/240 VAC 3 phase).

2. With power off, remove the PSM cover and ensure proper connections have been made to terminals L1, L2, and L3 and that a proper ground is connected. Phasing of the input power connections is arbitrary.

3. Disconnect all wires from the PSM DC bus terminal posts marked + and -. Install the PSM cover, then turn on input power. Verify that DC bus voltage is in the proper range (325 VDC nominal with 230 VAC input). Check that the green PSM READY LED is on and that all three red LEDs are off and that the PSM fans are operating.

4. Disconnect input power and check that the green LED goes off and the DC bus voltage falls to less than 15 VDC within one second.

5. Remove PSM cover. Reconnect the DC bus wires to the PSM terminals marked + and - ensuring that proper polarity is maintained. Install the PSM cover.

ATTENTION

Do not substitute the DC bus wires provided with wires of a different length or gauge.

Failure to observe this precaution may result in damage to or destruction of the ULTRA Plus PDM.

Start-up Procedure for PDM

1. Ensure input power to the PSM is off.

2. Disconnect all interface cables (P1-P7) from each ULTRA Plus PDM.

3. With input power still off, disconnect motor leads from ULTRA Plus PDM terminals R, S, and T. Verify with an ohmmeter that the resistance between ULTRA Plus PDM terminals R to GND, S to GND, and T to GND is above 500k ohms. If the resistance is acceptable, reconnect the motor leads to the ULTRA Plus PDM terminals marked R, S, and T.

4. Verify that the DC bus wires are connected to each ULTRA Plus PDM with proper polarity.

5. Connect all interface cables (P1–P7) to the ULTRA Plus PDMs

ATTENTION

Perform the initial power-up with the motor shaft disconnected from a load and the shaft key removed. Improper wiring or undiscovered shipping damage could result in undesired motor motion. Be prepared to remove power if excessive motion occurs.

6. Make sure that the motor is disconnected from the load before applying power. This prevents mechanical damage should a fault occur.

7. Apply input power and check the LEDs.

a. The green DC BUS LED should turn on to indicate power is applied.

b. The bicolor STATUS LED should turn green.

The ULTRA Plus PDM is in a fault condition if the STATUS LED is red. Continue with the following instructions and perform Step 9 to clear any faults.

8. Select **Online** from the Diagram menu to display the Online Manager window.

9. Initialize and load the appropriate the Personality Module files for the ULTRA Plus PDM and motor combination as follows:

a. Select **Enter Setups** from the Online Manager window to display the Axis Setups dialog.

b. Select **Initialize PM** and **Execute** to display the Initialize PM dialog.

c. Select the appropriate ULTRA Plus PDM from the Drive list.

d. Select the appropriate motor type from the Motor list.

e. Verify the Encoder list displays the correct line count for the motor.

If necessary, select the proper encoder resolution value.

f. Select **Update PM** to initialize the Personality Module with the specified drive and motor parameters.

g. After the Personality Module is properly initialized, select **Yes** to reset the ULTRA Plus PDM and exit the Update PM dialog.

h. Select **Cancel** to exit the Axis Setups dialog.

10. If the STATUS LED is red perform the following steps:

a. Select Enter Setups to access the Axis Setups dialog.

b. Select **I/O Status Monitor** and press **Execute** to view the I/O Status Monitor which displays the fault.

c. Correct any fault conditions. Refer to Error Messages and Error Output on page 5-4 for diagnostic assistance.

d. Close the I/O Status Monitor.

e. Select **Cancel** to exit the Axis Setups dialog.

f. Double click the Reset Drive block in the Online Manager command window to reset the ULTRA Plus.

g. Verify the STATUS LED is green.
If the STATUS LED is red, return to Step a.

11. Verify the fan is operating by checking that air is blowing from the top of the ULTRA Plus PDM.

12. Disable the ULTRA Plus PDM by performing one of the following:

- Turn the Enable input OFF, or
- Double click on the Feedback block to access the Feedback dialog.
  Set State = **OFF** and select **Execute**. Select **Cancel** to exit the dialog.

13. Select **Enter Setup**s to access the Axis Setups dialog from the Online Manager window.

14. Verify the encoder increments and decrements properly as follows:

a. Select **Encoder Test** and **Execute** from the Axis Setups dialog to display the Encoder Test dialog.

b. Select **Zero Counts** to reset the Count value to 0.

c. Rotate the motor shaft clockwise and verify that the Count value increases.

d. Rotate the motor shaft counterclockwise and verify that the Count value decreases.

e. Select **Cancel** to exit the Encoder dialog.

15. Select **Close** to exit the Axis Setups window.

16. Enable the ULTRA Plus PDM by performing one of the following:

- Turn the Enable input ON, or
- Double click on the Feedback block, set State = **ON** and select **Execute**.

Select **Cancel** to exit the dialog.

17. Verify the motor is stationary and has holding torque.

18. Command motion and verify the motor rotates in the proper direction by performing one of the following steps:

- Enable the jog inputs, or
- Double click on the Jog Axis block in the Online Manager window to access the Jog Axis dialog. Select **Execute** from the Jog Axis dialog to rotate the motor. The direction and speed of rotation may be changed in the Jog Axis block. Select **Cancel** to exit the Jog Axis dialog.

19. Select **ESTOP** in the Online Manager command window to halt motion, stop program execution and set Feedback = OFF.

20. Remove input power. The LEDs should turn off within ten seconds.

21. Repeat Step 6 through Step 20 for each additional ULTRA Plus PDM.

Motors

ATTENTION

Motor power connectors are for assembly purposes only. They should not be connected or disconnected while power is applied to the drive.

ATTENTION

Perform the initial power-up with the motor shaft disconnected from a load and the shaft key removed.

Improper wiring or undiscovered shipping damage could result in undesired motor motion. Be prepared to remove power if excessive motion occurs.

ATTENTION

Rotating motor shafts can cause extensive damage and injury.

Motors must be properly guarded during testing and in the final installation.

1. Disconnect motors from the load before applying power. This prevents mechanical damage should a fault occur. If this is not possible, take adequate precautions in case of a fault.

2. Disconnect all interface cables from the ULTRA Plus PDM and remove the its cover (1398-PDM-25, 50, 100 or 150 only). Connect the 4 motor wires (R, S, T, and ground) to the proper ULTRA Plus PDM. Install all ULTRA Plus PDM covers and connect all interface cables to the ULTRA Plus PDM.

3. Disable each ULTRA Plus PDM by performing one of the following:
- Turn the Enable input OFF, or
- Double click on the Feedback block to access the Feedback dialog. Set State = **OFF** and select **Execute**. Select **Cancel** to exit the dialog.

4. Reapply input power and check for proper power-up diagnostics as shown by the STATUS LED on each unit.

5. Limit the current to the motor as follows:

a. Double click the Equation block in the Online Manager command window to access user and system variables and the general purpose outputs.

b. Select **System Variable/Flags** from the menu.

c. Check Current Limit in the scroll list and enter a current limit value that is low (25% of peak current is a low value).

d. Select **Execute** to make the selection.

e. Select **Cancel** to exit the Equation dialog.

6. Select **Close** to exit the Axis Setups window.

7. Command motion and verify each motor rotates in the proper direction by performing one of the following steps:
- Enable the jog inputs, or
- Double click on the Jog Axis block in the Online Manager window to access the Jog Axis dialog. Select **Execute** from the Jog Axis dialog to rotate the motor. Select **Cancel** to exit the Jog Axis dialog.

8. Select **ESTOP** in the Online Manager command window to halt motion, stop program execution and set Feedback = OFF.

   If the motor does not turn clockwise, the power wires and encoder wires should be inspected to ensure proper connection to the ULTRA Plus PDM.

9. Disable all ULTRA Plus PDMs and turn OFF input power. Measure the DC bus voltage to be sure that it is below 15 VDC.

10. Now that the system installation is verified, return the I limit parameter to a value appropriate for the application.

Operator Terminal

The Operator Terminal requires no special start-up procedure. Refer to Operator Terminals on page 3-16 for wiring instructions. The operator terminal display LED should be lit. No message will appear on the screen unless the operator terminal is connected to the ULTRA Plus PDM serial port and the ULTRA Plus PDM sends a message to the operator terminal. When the Operator Terminal is connected to a ULTRA Plus PDM, press the Status key to verify the Operator Terminal is communicating properly.

Personality Module

Refer to the GML Ultra User Manuals for saving the Personality data in a computer file and loading it into the ULTRA Plus controller using the upload options in the GML Online Manager.

Check for Problems in the System

The ULTRA Plus PDM system is designed to provide diagnostic aids that help isolate any problems to a "module" in the system. A module may be a ULTRA Plus PDM, Power Supply (1398-PDM-25, 50, 100, and 150), Personality Module, motor and encoder, cables, or the mechanical system. The ULTRA Plus PDM circuitry is designed to prevent problems in any one module from damaging any other module. The modular package allows very simple field replacement. If a GML is replaced, the personality module is transferred to the replacement module and all programs, parameters, and other information are moved to the PDM. The Personality Module, system firmware, and fuses are the only field replaceable items in the system.

Maintenance of the ULTRA Plus PDM system is virtually unnecessary. The primary consideration is to ensure that the fans are operational and ULTRA Plus PDM is operated in a properly sized and ventilated enclosure with proper fusing.

Light Emitting Diodes (LED)

The GML and PSM each have LEDs on the front. These LEDs provide a first level of diagnostics.

Positioning Drive Module STATUS LED

All GMLs have a STATUS LED on the top, front, right hand corner. This LED may appear green, red, or opaque (OFF).

Green

The LED on the ULTRA Plus PDM indicates the present status of the GML. During normal operation, when no fault conditions exist, this LED is green. This LED turns red to indicate that the GML has detected a fault.

Red

If a fault is detected, the LED turning red indicates there is a fault in the system. This does not indicate that the GML should be replaced immediately; many fault conditions are caused by problems external to the GML. The specific fault information is available from the serial ports. Fault messages are

displayed on the operator terminal screen if the operator terminal is present. The LED labeled SYS FAULT on the operator terminal also will turn on (red) to indicate that a fault has occurred.

Not lit (OFF)

When power to the GML is off, the STATUS LED is not lit. If the GML DC BUS LED is ON and the STATUS LED is OFF, there may be a failure in the logic power supply.

DC Bus Power (1398-PDM-25, 50, 100, and 150)

Above Terminal Block 1 is a DC BUS LED. This LED indicates that the DC Bus is charged.

LED Label	LED Color	Description
PHASE LOSS	RED	OFF = OK (Normal Operation)
		ON = Loss of one phase of incoming AC power. The PSM will continue to run on two phases and the fault LED ON.
OVERTEMP	RED	OFF = OK (Normal Operation
		ON = Excessive main heatsink temperature
DISABLED	RED	OFF = Not disabled (Normal Operation)
		ON = DC bus disabled by external enable input
PSM READY	GREEN	OFF = No DC bus voltage
		ON = DC bus charged (Normal Operation

If none of the LEDs are ON (either red or green), and incoming line voltages are found to be correct, there may be a PSM failure. Replace the PSM with another module.

Operator Terminal Status Screens

The ULTRA Plus PDM has 9 status screens that may be accessed by pressing the STATUS key. Each time the STATUS key is pressed the next status screen is displayed. The BACKSPACE key can be used to scroll backwards through the status screens. The CLEAR Key will remove the status display or clear the peak values.

Variable Name	Description Refer to the *GML Programming Reference* for detailed information about each flag and variable
Status Flags	ATHOME, HSEQCPL, INPOSN, ERROR, XFER, READY, ENABLED, PAUSE
Program Status	Program Number. If compiled with the debug option ON, the instruction that is executing will also be displayed.
Position Status	PCMD, POSN, FE
Velocity Status	VCMD, FVEL1, VEL2
Input Status	Inputs 1 through 16. Inputs 17 through 48 if an Expansion I/O or Memory and Expansion I/O card is installed.
Output Status	Outputs 1 through 8. Outputs 9 through 24 if an Expansion I/O or Memory and Expansion I/O card is installed.
Current Status	ICMD, IAVE, IN PEAK CURRENT
Commanded Position Status	PGEN, PJOG, PEXT
Peak Status	PFE, PVEL1, PICMD

All position values displayed on the Operator Terminal status screens are in user units, velocity values are in user units per timebase, and current (torque) variables are in amps.

Personality Module Default Initialization

An inoperable NVRAM may be recovered by initializing the PM to the factory default settings. This command zeroes the NVRAM and performs a series of NVRAM integrity tests before installing factory default NVRAM settings.

IMPORTANT This selection erases the existing Personality Module parameters and motion programs. If the PM was programmed, be prepared to restore the PM settings and motion programs from your backup files. See section “Apply Power for the First Time” for instructions to initialize the PM with PDM and motor configuration data.

To reinitialize a Personality Module to the factory default settings perform the following:

1. Select Initialize ULTRA Plus PDM from the File menu. The Initialize Personality Module window will appear.
2. Click the Factory Default Initialization tab.
3. Click the Factory Initialize PM button to initialize the PM. The Percent Complete indicator displays the status of the initialization.

Error Messages and Error Output

If there is a fault, GML Ultra Software can provide specific error messages. If a personal computer running GML software is connected to the P6 connector, the error message can be displayed in the Monitor menu, Status dialog box. The error messages are also displayed on the optional Operator Terminal.

The Error output may be disabled and used as a general purpose output. Therefore, this output may not be available for diagnostic purposes. The remainder of the discussion about the Error output assumes that output 8 is assigned as the Error output. The output can be assigned in the Parameter menu.

The Error output becomes active whenever the ULTRA Plus PDM detects a fault. The ULTRA Plus PDM will not begin to execute motion programs while a fault is present. After removing the cause of the fault, toggling the ENABLE input OFF and back ON, or issuing a RESET command will clear the fault and allow execution of motion programs. Some faults, however, can only be cleared by an HRESET command. These faults include numbers 42, 45–54, 68, 69, 73, and 74. Refer to "Error Messages" on page 5-5 for a description of each fault.

On some machines you may want the ULTRA Plus PDM to continue running even after some faults occur. This is accomplished by setting Disable on Fault to Partial. In this case, the following faults are disabled: Iavg fault, Motor Overtemperature, Soft Forward Limit, and Soft Reverse Limit. All faults will cause the Error output to turn ON (if enabled). However, if Disable on Fault is set to Partial, and a fault listed above occurs, the ULTRA Plus PDM will remain enabled and execute motion programs normally. The Error output in this case serves as an alarm, and a programmable logic controller (PLC) or other controller can then gracefully shut down the machine without damaging the tooling or work piece.

The following table lists the faults that activate the Error output. The number preceding the fault is the error number.

No.	Error Messages	Description
3	2ms Reentrancy Fault	The system did not finish the required calculations in the previous 2ms position loop update in time for the next position loop update.
4	Math Overflow	A math overflow occurred (a calculation exceeded the internal system limit). Check the values of the variables used in the program.
5	Divide by Zero	A division by zero calculation was attempted. Check the values of the variables used in the program.
6	LOOP variable range	A variable used as the count for a LOOP statement was out of range. The valid range of a LOOP count is 0 to 65535.
8	PRECISION Out of Range	Decimal point precision is not within the range of 0 to 4.
9	BCD Input Range	A number larger than 9 was read in as a BCD number in a BCD statement in a program. Check the inputs that are being used for the BCD input.
12	LOOP Count Out of Range	Loop constant value is not within the range of 0 to 65535.
13	Profile Calculation	The move cannot be made based on the parameters for the move: distance, velocity, acceleration, or time. Possible causes are variable values used for the move parameters that result in an acceleration or time of 0.
16	Invalid Opcode	The GML tried to execute a program opcode that was not valid (programs are compiled into opcodes that the GML executes). Compile the program again to make sure it compiles correctly.
17	Home Not Defined	Home has not been defined when trying to execute a MOVP (absolute) move. Run the Home program or Define Home and execute the MOVP command again.
19	Delay Out of Range	Time value for a Delay statement is greater than 65,535 seconds.
20 21 22 23	KP Out of Range KFF Out of Range KI Out of Range KPZ Out of Range	The parameter listed has exceeded the internal system limit. The limit is determined at run time based on the Scale parameter. Check the gain values under the Parameter menu.
24	Gear Out Of Range	The calculated value for the gear ratio denominator is greater than 32,767. Check that the value is correct.
 30 31 32	Calculations: S-Curve Accel Velocity	The calculation listed has exceeded the internal system limit. The limit is determined at run time based on the Scale parameter. Check the velocity and acceleration values under the Parameter menu.

(Continued)

No.	Error Messages	Description
33	Iavg Fault	The average current output of the GML exceeded safe levels for the motor or GML. Check for correct connection of the motor encoder to the GML or of the motor leads to the GML. Other possible causes are motor stall or end of travel condition, excessive duty cycle, or no DC bus voltage. This can also occur if the drive is enabled and there is power supplied to the L1 and L2/N AC AUX inputs, but not to the L1 and L2/N AC main inputs (this provides logic voltage, but no DC bus voltage).
34	Excessive FE	The following error has exceeded the Following Error Limit for a time greater than the Following Error Time. Possible causes are loss of encoder feedback, low gain settings, a commanded velocity or acceleration that exceeds system capabilities, or entries for Following Error Limit and/or Following Error Time that are beyond system capabilities.
35	Excessive Speed	Commanded velocity of a move exceeded the Overspeed value set under Velocity / Acceleration in the Parameter menu.
36	Cam Profile Overflow	The target follower position in a cam profile could not be calculated.
37	POS Track Overflow	The target follower position with tracking mode active could not be calculated
38	Serial Port #2 Busy	A PRINT or READ statement was attempted to serial port #2 while the system was reserving the port for other functions.
39	Drive Not Ready	The Ready to Run signal from the drive indicates a fault in the drive.
40	Motor Overtemperature	The temperature sensor in the motor windings indicated that the motor temperature has exceeded the rating. Check for mechanical binding, undersized motor, or duty cycle too high.
41	Power Module Fault or Heat Sink Overtemperature	This fault typically indicates that the amplifier is trying to supply currents above its rating to the motor. Check for mechanical binding, excessive duty cycle, or faulty motor wiring. (1398-PDM-10, 20, 30, 75, and 150B) The power module has detected excessive internal temperature or excessive current to the motor. On earlier power modules, this fault indicates the heat sink temperature has exceeded the rated temperature. (1398-PDM-25, 50, 100, and 100) The heat sink temperature has exceeded the rating.
42	Bus Undervoltage or Logic Supply Fault	The DC Bus voltage is too low, or power supplies for the amplifier circuitry were below the nominal output voltage. This indicates a problem in the GML internal power supply.

(Continued)

No.	Error Messages	Description
43	Peak Overcurrent	The GML current sensors detected a short circuit in the motor leads. Check motor power cables for shorts.
44	Bus Overvoltage	The DC bus voltage exceeded safe levels. This error usually indicates that the power supply shunt is not operating properly. Check the shunt fuse on the Power Supply Module (1398 PDM-25, 50, 100, and 100). See Figure 3.10 on page 3-15.
45 46	Encoder 1 Fault Encoder 2 Fault	Incorrect encoder signals were detected by the PDM circuitry. The encoder signals may be out of quadrature or an encoder signal is missing (broken wire).
47	Watchdog Test Fault	The Watchdog circuitry test (performed at power up) failed. The GML should be replaced.
48	Personality Fault	A checksum error was detected in the personality data for the GML. Reload the Personality Module from a previously saved file, or replace the Personality Module.
49	Watchdog Reset	The watchdog timer is pulsed by the microprocessor every millisecond to ensure that the microprocessor is running properly. If the microprocessor fails to pulse the watchdog, a Watchdog Reset fault occurs.
50	RAM R/W Fault	The static RAM failed a test. The GML should be replaced.
51	EPROM Checksum	One of the EPROMs failed the checksum test at power up. All three EPROMs, U66, U67, and U87 should be replaced.
52	TEXT Checksum	The text EPROM failed the checksum test at power up. The text EPROM, U57, should be replaced.

Specifications

1398-PDM-10, 20, 30, 75, and 150B

The tables starting below provide specifications for the ULTRA Plus PDMs and their accessories.

1398-PDM-10, 20, 30, 75, and 150B Specifications

Drive Module Type	1398 PDM-10 (1Φ)	1398 PDM-20 (1Φ)	1398 PDM-30 (1Φ)	1398 PDM-75 (3Φ)	1398 PDM-150B (3Φ)
Peak Output Current/ Phase	10 amps	20 amps	30 amps	75 amps	150 amps
Continuous Output Current/ Phase	5 amps	10 amps	15 amps	35 amps	65 amps
Continuous Output Power	1 kW	2 kW	3 kW	7 kW	15 kW
Electrical Specifications					
Line Voltage Input (50/60 Hz)	100-240 VAC	100-240 VAC	100-240 VAC	100-240 VAC	100-240 VAC
Continuous Shunt Power	50 W	50 W	50 W	50 W	180W
Peak Shunt Power	4.5 kW	4.5 kW	4.5 kW	10 kW	19 kW
Continuous Shunt External	2.4 kW	2.4 kW	2.4 kW	4 kW	8 kW
Peak Shunt External	6 kW	6 kW	6 kW	10 kW	19 kW
Physical Specifications					
Weight	15 lb (5 kg)	15 lb (5 kg)	15 lb (5 kg)	21 lb 10 kg	31 lb 14 kg
Operating Temperature	32° to 140°F (0° to 50°C)				
Storage Temperature	-40° to 176°F (-40° to 80°C)				

1398-PDM-10, 20, 30, 75, and 150B Specifications (Continued)

Drive Module Type	1398 PDM-10 (1Φ)	1398 PDM-20 (1Φ)	1398 PDM-30 (1Φ)	1398 PDM-75 (3Φ)	1398 PDM-150B (3Φ)
Relative humidity	5% to 95% non-condensing				
External Shunt Resistor P/N 9101-1079					
Continuous Shunt Power	200 W				
Peak Shunt Power	6000 W				

1398 PDM-25, 50, 100, and 150

1398-PDM-25, 50, 100, and 150 Specifications

Positioning Drive Module	1398 PDM-25	1398 PDM-50	1398 PDM-100	1398 PDM-150
Peak Output Current/Phase	25 amps	50 amps	100 amps	150 amps
Continuous Output Current/Phase	20 amps	40 amps	50 amps	65 amps
Continuous Output Power	4 kW	8 kW	10 kW	12 kW
Physical Specifications				
Weight	15 lb (5 kg)	15 lb (5 kg)	15 lb (5 kg)	21 lb 10 kg
Operating Temperature	32° to 122°F (0° to 50°C)			
Storage Temperature	-40° to 176°F (-40° to 80°C)			
Relative humidity	5% to 95% non-condensing			
External Shunt Modules				
Continuous Shunt Power	200 W	900W		
Peak Shunt Power	6000 W	10kW		

Power Supply Module	1398-PSM-50	1398-PSM-125	
Line Voltage Input (3Φ 50/60 Hz)	100 to 240 VAC	100 to 240 VAC	

1398-PDM-25, 50, 100, and 150 Specifications (Continued)

Positioning Drive Module	1398 PDM-25	1398 PDM-50	1398 PDM-100	1398 PDM-150
Fused Disconnect	Class RK5 40 amps		Class RK5 90 amps	
Output Bus Voltage	100-340 VDC		100-340 VDC	
Continuous Output Current	50 amps		100 amps	
Continuous Shunt Dissipation	600 W		1200 W	
Peak Shunt Power	20 kW		40 kW	
Terminal Block Torque	11.0 lb-in (1.25 Nm)		24.0 lb-in (2.75 Nm)	

Operator Terminals

The two optional operator terminal specifications are compared in the following table.

	Operator Terminals	
Terminal	**1398-HMI-002**	**1398-HMI-003**
Input voltage	110/240 VAC ±15%	24 VDC ±20% Nominal
Supply	25 Watts	0.5 Amps
Temperature Operating Storage	32° to 131°F (0° to 55°C) ambient -40° to 158°F (-40° to 70°C) ambient	32° to 104°F (0° to 40°C) ambient 4° to 176°F (-20° to 80°C) ambient
Humidity	5% to 95% non-condensing	80% maximum, non-condensing
Weight	7 lb. (3 kg)	2.3 lb. (0.1 kg)
Display	Vacuum Fluorescent Display, 4 lines by 20 characters Characters 5 mm high	Vacuum Fluorescent Display, 4 lines by 20 characters Characters 5 mm high
Front panel seal	NEMA 4 (IP64) NEMA 12 (IP66)	NEMA 4/IP65
RS-232 cable	9101-2205	9101-2205

Transformers

Multi-tap isolation transformers are available for line voltage matching.

Single Phase Transformer specifications

The 1398-PDM-10, 20, 30, and 75 use a single phase transformer.

Specification	Value
Rating	3.0 kVA
Input	220/ 230/ 240/ 440/ 460/ 480 VAC RMS
Output[a]	115/ 230 VAC RMS
Ambient temperature	32° to122°F (0° to 50°C)
Single phase input and output (50/60 Hz)	

Refer to Single PhaseTransformer Load Regulation Curve on page 2-6 and Refer to Single PhaseTransformer Outline Diagram on page 2-8.

Three Phase Transformer specifications

The 1398-PDM-25, 50, 100, and 150 have a separate power supply module and use a three phase transformer. Refer to Three PhaseTransformer Load Regulation Curves on page 2-7 and Refer to Three Phase Transformer Outline Diagram on page 2-9.

Specification	Model			
	TF-03	TF-06	TF-12	TF-18
Rating	3 kVA	6 kVA	12 kVA	18 kVA
Weight	86 lb	135 lb	200 lb	325 lb
	31 kg	61 kg	91 kg	148 kg
Input	208/ 230/ 240/ 380/ 460/ 480 VAC RMS			
Output[a]	115/ 230 VAC RMS			
Ambient temperature	32° to122°F (0° to 50°C)			
Three phase input and output (50/60 Hz)				

Options and Accessories

PDMs and Optional Accessories

The following tables can be used to order products. Use the "Item Number" (Order number) whenever possible. The "Alternate Number" (Manufacturing number) is used for ordering when the "Item Number" is not available or when researching information about the component or module.

This table gives the ULTRA Plus PDM reference numbers.

Item Number	Description	Alternate Number
1398-PDM-10	Positioning Drive Module	9101-2185
1398-PDM-20	Positioning Drive Module	9101-2186
1398-PDM-25[1]	Positioning Drive Module	9101-3058
1398-PDM-30	Positioning Drive Module	9101-2187
1398-PDM-50[1]	Positioning Drive Module	9101-3059
1398-PDM-75	Positioning Drive Module	9101-2188
1398-PDM-100[1]	Positioning Drive Module	9101-3060
1398-PDM-150[1]	Positioning Drive Module	9101-3061
1398-PDM-150B	Positioning Drive Module	9101-2234
	Fuse, Drive Module F1 1 Amp (for 24 VDC circuits Bussman MDL 1 or Littelfuse 313 001)	9101-0228

(1) Requires use of 1398-PSM-XXX Power Supply.

This table shows optional ULTRA Plus PDM accessories.

Item Number	Description	Alternate Number
1398-HMI-002	ULTRA Plus Operator Terminal, 110/240 VAC	9101-2196
1398-HMI-003	ULTRA Plus Operator Terminal, 24 VDC	9101-2209
1398-SR9P	External Shunt Kit (900W)	9101-1697
	External Shunt Kit (200W)	9101-1183
	Personality Module Replacement Kit[1]	9101-2226

(1) The Personality Module is programmed with standard factory default settings. If replacing a previously installed Personality Module, user programs and user selected parameters must be re-entered into the new Personality Module memory.

I/F Conversion Card

This table lists the 24V Sourcing interface conversion card and its connections cables.

Description	Alternate Number
I/F Conversion Card, 24V Sourcing[1]	9103-0152
Cable, I/F Conversion Card - 3ft (1m),	44-0141-003
Cable I/F Conversion Card - 10ft (3m),	44-0141-010

(1) Required for compliance with the European Union Low Voltage Directive (LVD). It must be mounted in the same enclosure as ULTRA Plus PDM.

Power Supply Modules

This table lists three phase power supplies and their fuses.

Item Number	Description	Alternate Number
1398-PSM-50	Power Supply Module	9101-3056
1398-PSM-125	Power Supply Module	9101-3057
	Auxiliary PSM	9101-0439
	Connector TB1, PSM Screw Terminal	9101-0111
	1398-PSM-50 Fuse Bussman KLM-8 or Littelfuse KLK D 8	9101-0225
	1398-PSM-125 Fuse Bussman KLM-20 or Littelfuse KLK D 20	9101-1076
	Fuse F1, PSM-AUX Bussman MDX-7 or Littelfuse 313 007	9101-0123

AC Line Filters

This table lists AC Line Filters required for CE (EMC) compliance.

Description	Alternate Number
1398-PDM-10 (10 Amps continuous, single phase)	9101-1517
1398-PDM-20 (23 Amps continuous, single phase)	9101-1518
1398-PDM-30 (36 Amps continuous, single phase)	9101-1387
Multiple drives [1] (50 Amps continuous, single phase)	9101-1388
1398-PDM-75 (36 Amps continuous, three phase)	9101-1389
1398-PDM-150B (50 Amps continuous, three phase)	9101-1575
Multiple drives[1] (80 Amps continuous, three phase)	9101-1390

[1] For multiple PDMs using one filter, the combined PDMs input current must not exceed filter ratings.

Cables

This table lists power cables between the PDM Terminal Block (TB 1) and the Motor. The last three digits (XXX) indicate a standard cable length: 010 = 10ft (3m), 025 = 25ft (7m), 050 = 50ft (15m), and 075 = 75ft (23m).

PDM	Motor Description	Alternate Number
1398-PDM-10, 20, 30 or 75	H-2000 or H-3000 Motor	9101-1080-XXX
1398-PDM-10, 20, 30 or 75	H-4000 or F-4000 Motor	9101-1081-XXX
ULTRA Series	F-2000, 3000 or H-2000, 3000	9101-1381-XXX
ULTRA Series	F-4000 or H-4000	9101-1382-XXX
ULTRA Series	F-6000 or H-6000	9101-1383-XXX
ULTRA Series	Programming Terminal Cable (RS-232) (P6) (1)	9101-2024-XXX
	ULTRA Series Operator Terminal Cable (RS-232) (P7)	9101-2025-XXX
	ULTRA Series Motor Encoder Cable (P5 Connector)	9101-2027-XXX
	ULTRA Series Control Station Cable	9101-2030-010
	ULTRA Series Encoder Cable	9101-2031-XXX
	1398-PDM-25, 50, 100 or 150 for H-3000 Motor Power Cable with Motor Connector	9101-0250-XXX
	1398-PDM-25, 50, 100 or 150 for H-4000/F-4000 Motor Power Cable	9101-0251-XXX
	1398-PDM-25, 50, 100 or 150 for H-6000/F-6000 Motor Power Cable	9101-0252-XXX
	1398-PDM-25, 50, 100 or 150 for H-8000 Motor Power Cable	9101-0253-XXX
	N-Series Motor Power Cable	9101-1676-XXX
	ULTRA Series P4 to P4 Master/Follower Cable	9101-2127-002
	ULTRA Series Motor Encoder Cable (P5 Connector) with right angle motor connector	9101-2135-025 or 9101-2135-050
	N-Series Encoder Cable (P5 Connector) with right angle motor connector	9101-1677-XXX or 9101-1679-XXX
	1398 PDM-10, 20, 30 or 75 for H-6000/F-6000 Motor Power Cable	9101-2179-XXX
	ULTRA Plus to I/O Conversion Card, 3-foot Cable	44-0141-003
	ULTRA Plus to I/F 24V Conversion Card, 10-foot Cable	44-0141-010

(1) RS-232 cables are available in 3m and 7m (10 and 25 ft) lengths only.

Transformers

This table lists single and three phase transformers to be used with the ULTRA Plus PDMs.

Description	Alternate Number
3 KVA three phase transformer	0020-5091-001
6 KVA three phase transformer	0020-5091-002
12 KVA three phase transformer	0020-5091-003
18 KVA three phase transformer	0020-5091-004
Auxiliary PSM transformer	0020-5093
3 KVA single phase transformer (1398 PDM-10, 20, 30 or 75)	0020-5097

Motor Identification

H - 4 0 3 0 - Q - H 00 AA

FACTORY DESIGNATED SPECIAL OPTIONS
- AA = STANDARD FLANGE
- AN = NEMA56C FLANGE

OPTIONS
- 00 = STANDARD
- 01 = 90 Vdc BRAKE
- 04 = 24 Vdc BRAKE

OPTICAL ENCODER LINE COUNT*
- F = 1000
- H = 2000 (*S T A N D A R D*)
- J = 2500
- K = 5000
- L = 500
- M = 3000
- N = 1500

MOTOR WINDING K_E DESIGNATOR
NOTE: SPECIAL ORDER WINDINGS AVAILABLE

FRAME SIZE

Series DESIGNATOR
- F = FERRITE MAGNET
- H = LOW INERTIA
- N = NEMA

* Not all line counts are available on all motors

Motor Connectors

This table lists motor connectors for building cables for the H, F, and N-Series motors.

Connector Type	Motor Series	Straight	Right Angle	
Power connectors	H-Series (2000 and 3000)	9101-0325 (MS3106F18-4S)	9101-0398 (MS3108F18-4S	
Power connectors	H and F-Series (4000)	9101-0326 (MS3106F20-4S)	9101-0399 (MS3108F20-4S)	
Power connectors	H and F-Series (6000)	9101-0327 (MS3106F24-22S)	9101-0400 (MS3108F24-22S)	
Power connectors	H-Series (8000)	9101-0328 (MS3106F32-17S)	9101-0401 (MS3108F32-17S)	
Power connectors	N-Series	9101-1557 (Solder) MS3116F14-5S (Solder) MS3126F14-5S (Crimp)	KPT08F14-5S (Solder) KPSE08F14-5S (Crimp)	PT08E14-5S (Solder) PT08SE14-5S (Crimp)
Encoder connectors	H-Series and F-Series	9101-0329 MS3106F20-29S	9101-0402 MS3108F20-29S	
Encoder connectors	N-Series	9101-1558 (Solder) MS3116F14-19S (Solder) MS3126F14-19S (Crimp)	KPT08F14-19S (Solder) KPSE08F14-19S (Crimp)	PT08E14-19S (Solder) PT08SE14-19S (Crimp)
Brake connectors	H-Series and F-Series	9101-0330 MS3106F12S-3S	9101-0403 MS3108F12S-3S	
Brake connectors	N-Series	9101-1698 (Solder) MS3116F12-3S (Solder) MS3126F12-3S (Crimp)	KPT08F12-3S (Solder) KPSE08F12-3S (Crimp)	PT08E12-3S (Solder) PT08SE12-3S (Crimp)

Motor Shaft Seal Kits

This table lists motor shaft seal kits available for the H, F, and N-Series motors.

Description (Outside Dia x Inside Dia x Width)	Alternative Number
Shaft seal kit, H-2000 motor 22 mm x 12 mm x 7 mm	0041-5056
Shaft seal kit, H-3000 motor 28 mm x 15 mm x 7 mm	0041-5057
Shaft seal kit, H-4000 motor 47 mm x 20 mm x 7 mm	0041-5058
Shaft seal kit, H-6000 motor 80 mm x 38 mm x 8 mm	0041-5059
Shaft seal kit, H-8000 motor 85 mm x 45 mm x 8 mm W	0041-5053-005
Shaft seal kit, F-4000 motor 1.437 inch x 0.875 inch x 0.25 inch	0041-5060
Shaft seal kit, F-6000 motor 2.125 inch x 1.438 inch x 0.31 inch	0041-5061
Shaft seal kit, N-2300 motor mm/in 0.035 x 0.001 x 0.005 / 0.875 x 0.250 x 0.125	0041-5068
Shaft seal kit, N-3400 motor mm/in 0.044 x 0.019 x 0.010 / 1.125 x 0.500 x 0.250	0041-5069
Shaft seal kit, N-4200 motor mm/in 0.044 x 0.025 x 0.010 / 1.125 x 0.625 x 0.250	0041-5070
Shaft seal kit, N-5600 motor mm/in 0.054 x 0.030 x 0.010 / 1.375 x 0.750 x 0.250	0041-5071
Note: Shaft seals are manufactured to inch dimensions. Millimeter dimensions are conversions from inches. Shaft seals require a lubricant to reduce wear. Lubricant is provided with kit.	

A

Absolute positioning 3-5, 3-7
AC
3-phase power 3-1
Coils suppressed with RC filters 2-45
Line filter
Installation 2-40, 2-41
Order B-3
Rasmi 2-39
Roxburgh 2-39
Schaffner 2-39
Power transformer 2-38
Power wiring 2-38
Accel calculation error 5-5
Analog to Digital converter
Resolution 3-28
ANSI
C62 and C63 2-37
Assignable function
Home Sequence Complete (output) 3-27
Assignable functions
Digital Outputs 3-27
At Home output
Assignable function 3-27
Auxiliary power supply
Description 1-7
Logic power 3-5, 3-7

B

BCD Input Range error 5-5
Bonding
Mounting 2-31
Sub panels 2-32
Bus
DC Power Supply 3-7
Overvoltage error 5-7
Undervoltage error 5-6

C

Cable
Description 1-7
Order B-4
Shielding 2-29
Cam Profile Overflow error 5-6
COM1 connector 3-41
Connections
Motor power 3-18
Operator Terminal power supply 3-16
PDM terminal block 3-1, 3-6
Contents of manual P-2
Conventions
Conventions used in this manual P-3
Conversion Card 24V Sourcing 2-21

D

DC
Coils suppressed with diode 2-45
Multiple power installations 3-6
DC Bus
Power supply 3-7
Delay
Out of Range error 5-5
Diagnostics
DC Bus Power LED 5-2
Error Messages 5-4
LED 5-1
Personality Module Default Initialization 5-3
Diagram
Auxiliary Power Supply Connections 3-8
External Shunt Mounting and Connection Diagram 2-17, 2-18
Power Wiring Diagram (1398-PDM-25, 50, 100, and 100 3-5
Power Wiring Diagram for 1398-PDM-10, 20, and 30 3-2
Power Wiring for 1398-PDM-150B 3-4
Power Wiring for 1398-PDM-75 3-3
PSM AUX Outline and Connection Diagram 2-15
Transformer Load Regulation (1398 PDM-10, 20, 30, 75, and 150B) Curve 2-6
Transformer Outline Diagram (1398 PDM-10, 20, 30, 75, and 150B) 2-8
Transformer Outline Diagram (1398-PDM-25, 50, 100, 150) 2-9
Digital
Assignable output functions 3-27
Multiple outputs 3-27
Digital to Analog Converter (DAC)
Resolution 3-29
Dip Switch

Jumpers 2-26
RS-232 operation 3-46
SW-1 in network 3-40
SW1-1 3-44
SW1-6 3-44
SW1-7 3-44
Divide by Zero error 5-5
Documentation
Related documentation P-3
Drive Not Ready error 5-6

E

Earth ground 3-1
Electrical Noise 2-36
Electronic gearing 3-36
EMC
Defined 2-36
European Directive 2-28
Noise 2-36
PDM mounting requirements 2-29
Performance 2-27
Requirements 2-28
Cable shielding 2-29
Requirements - Flying leads 2-29
Requirements - Lead length 2-29
System Installation 2-36
Emergency Return 3-26
Emergency stop contactor 2-35
EMI
Bonding 2-31
Defined 2-36
Model 2-36
Problems 2-45
Source-Victim Model 2-37
Standards 2-37
EN
60529 (IEC 529) 2-2
61000-4-X series 2-37
Enable
Assignable Function 3-26
Enable Input 3-10
Enabled output 3-31
Enclosure
Faraday cage 2-43
IP4X 2-33
Metal 2-2
NEMA 2-2
Shielding 2-43
Sizing 2-3
Encoder
Encoder Fault error 5-7
Feedback 3-31, 3-33, 3-35
Shield 3-35
EPROM Checksum error 5-7
EPROMs
Installation 2-26
Error
BCD Input Range 5-5
Bus Overvoltage 5-7
Bus Undervoltage 5-6
Calculation 5-5
Cam Profile Overflow 5-6
Delay Out of Range 5-5
Divide by Zero 5-5
Drive Not Ready 5-6
Encoder Fault 5-7
EPROM Checksum 5-7
Excessive FE 5-6
Excessive Speed 5-6
Gear Out Of Range 5-5
Heat Sink Overtemperature 5-6
Home Not Defined 5-5
Iavg Fault 5-6
Invalid Opcode 5-5
KFF Out of Range 5-5
KI Out of Range 5-5
KP Out of Range 5-5
KPZ Out of Range 5-5
Logic Supply Fault 5-6
LOOP Count Out of Range 5-5
LOOP Variable Range 5-5
Math Overflow 5-5
Motor Overtemperature 5-6
Peak Overcurrent 5-7
Personality Fault 5-7
POS Track Overflow 5-6
Power Module Fault 5-6
PRECISION Out of Range 5-5
Profile Calculation 5-5
RAM R/W Fault 5-7
Reentrancy Fault 5-5
Serial 2 Busy 5-6
TEXT Checksum 5-7
Watchdog Reset 5-7
Watchdog Test Fault 5-7
Error output
Assignable function 3-27
Multiple axis 3-28

European Directive Compliance
Directive 2-28
Emergency Stop Contactor 2-35
I/O Conversion Card 2-34
Low Voltage Directive 2-33
Motors and Cables 2-33
Excessive
Excessive FE error 5-6
Excessive Speed error 5-6
External Shunt
Description 1-8
Installation 2-17
Power dissipation ratings 3-13

F

Faraday shield 2-38
Fault
Encoder 5-7
Iavg 5-6
Logic Supply 5-6
Personality 5-7
Power Module 5-6
RAM R/W 5-7
Reentrancy 5-5
Watchdog Test 5-7
Filter types 2-39
Firmware
Installation 2-25
Flying leads
Motor shield termination 2-29
Forward Limit 3-26
Full Load Amperage 2-22
Fuse
Short Circuit Protection 2-22

G

Gear
Out Of Range error 5-5
GML Ultra Software
Description 1-3
Installation 4-1
Ground
Ground bus bar 2-42
Safety ground 2-42
Single Point Ground Types 2-42
Torroid encoder shielding 2-45

H

Heat
Heat Losses for sizing enclosures 2-3
Heat Sink Overtemperature error 5-6
High frequency energy 2-32
Home
Home Command 3-26
Home Not Defined error 5-5
Home Sequence Complete (output) 3-27
Home Switch 3-26
Host
PLC 3-28

I

I/F Conversion Card 24VDC Sourcing 2-21, 3-23
I/O
24VDC Sourcing 3-23
Iavg Fault 5-6
In Position output
Assignable function 3-27
Incremental encoder 3-31, 3-35
Input
Isolating input power 3-1
Step and direction 3-37
Installation
EMC Motors and Cables 2-33
Installing for European Union Compliance 2-28, 2-33
Emergency Stop Contactor 2-35
I/F Conversion Card 2-34
Motor guidelines 2-16
Internal
Internal logic power supply 3-5, 3-7
Internal shunt 3-12
Invalid Opcode error 5-5
IP4X Enclosure 2-33

J

Jog
Forward 3-26
Reverse 3-26
Jumper
PDM internal power supply 2-26
PDM Internal shunt connection 2-17

K

KFF
Out of Range error 5-5
KI
Out of Range error 5-5
KP
Out of Range error 5-5
KPZ
Out of Range error 5-5

L

Lead length
EMC requirements 2-29
LED 5-1
Limit
Forward 3-25, 3-26
Reverse 3-25, 3-26
Logic Supply Fault 5-6
LOOP
Count Out of Range error 5-5
Variable Range error 5-5

M

Manuals 1-5
Math Overflow error 5-5
MIL-STD-461 2-37
Monitor Output 3-29
Motor
Compatibility with PDM Control 1-5
Description 1-5
Encoder 3-33
Mating Connectors 1-7, B-6
Mounting 2-14
Ordering Information B-5
Overtemperature error 5-6
Power leads 3-18
Shaft Seal Kits B-7
Shielded power cables 1-7, 2-33, 2-44, 3-19
Thermostat 3-33
Mounting 2-1
Auxiliary PSM Transformer 2-14
Bonding 2-31
Environment 2-2
Motors 2-16
Positioning Drive Module 2-14
Requirements 2-10
Shunt Resistor 2-17, 2-18
Ventilation 2-3

N

National Electrical Code
Requirements 2-22
NEMA enclosure 2-2
Noise 2-36
Emission supression diagrams 2-46
Operator terminal suppression 3-48
Problems 2-36
See Bonding 2-31

O

Operating Environment 2-2
Operator Terminal
Description 1-6
Installation 2-19
Mounting 2-19
Specifications A-3
Start-up Procedure 4-11
Optically isolated inputs 3-25
Ordering Information
Cable B-4
Motor Mating Connectors B-6
Motor Shaft Seal Kits B-7
Motors B-5
Transformers B-5
Output
Analog Output 3-29
Connecting inputs and outputs 3-27
Enabled Relay output 3-31
Monitor output 3-29
Ready Relay output 3-30
Sinking signal of output 3-27

P

Pause input 3-25
PDM
EMC mounting requirements 2-29
PDM with integral power supply 1-4
PDM with separate power supply 1-4
Peak Overcurrent error 5-7
Personal Computer (PC) 1-8
Personality Module
Description 1-5
Factory Default Initialization 5-3
Initialization
PDM-10, 20, 30 or 75 4-2

PDM-25, 50, 100 or 150 4-6
Installation 2-23
Location 2-23
Personality Module Fault 5-7
POS Track Overflow error 5-6
Positioning Drive Module
LEDs 5-1
Mounting 2-14
Power cable
Motor 2-33
Shielding 3-19
Power losses 2-3
Power Module Fault 5-6
Power supply
Auxiliary 1-7
Connections 3-16
Digital I/O 3-20
I/F 24V Conversion Card 3-24
Internal Logic 3-5
Isolating input power 3-1
Location 2-14
Module mounting 2-14
Motor connections 3-18
Operating environment 2-2
Operator Terminal 3-17
Power supply module 1-5
PRECISION Out of Range error 5-5
Profile Calculation error 5-5
Program Running output
Assignable function 3-27
Programmable Monitor 3-29

Q

Quadrature signals 3-31, 3-35

R

RAM R/W Fault 5-7
Rasmi AC Line filter 2-39
Ready output 3-30
Reentrancy Fault error 5-5
Regulatory requirements 2-27
Related documentation P-3
Reverse Limit 3-26
Roxburgh AC line filter 2-39
RS-232 3-42, 3-46
Daisy-chain network 3-39
Jumper 3-43
RS-422
Multi-drop network 3-39, 3-44, 3-46
Operator Terminal connections 3-47, 3-48

S

Safety ground 2-35, 2-42
Schaffner AC Line filter 2-39
S-Curve calculation error 5-5
Serial 1 Auxiliary (P7) 3-39, 3-41
Serial 2
Busy error 5-6
Computer (P6) 3-39
Shielded cable
Encoder 3-35
Motor 3-4
Shunt Resistor
Connection Diagram 2-17, 2-18
Internal in some PDMs 3-13
Mounting 2-17, 2-18
Single Point Ground Types 2-42
Sinking (active low) I/O 2-34
Sourcing (active high) I/O 2-34
Specifications
1398 PDM-25, 50, 100, and 150 A-2
1398-PDM-10, 20, 30, 75, and 150B A-1
Operator Terminal A-3
Transformers A-4
Start Program 3-26
Start-up Procedure 4-1
1398-PDM-10, 20, 30, 75, and 150B 4-1
1398-PDM-25, 50, 100 or 150 4-6
Motors 4-8
Operator Terminal 4-11
Personality Module 4-11
Status outputs 3-10
Step and direction inputs 3-37
Storage P-4
Suitable filter types 2-39
Support
Local product P-4
Technical product assistance P-4
SW1 dip switch
Nework settings 3-44
Unique addresses in network 3-40
Symbols and Conventions P-4
System firmware
Location 2-25
System Overview 1-2

T

Terminal block
Connections 3-1, 3-6
TEXT Checksum error 5-7
Transformer
Description 1-7
Isolation 3-6
Load Regulation (1398 PDM-10, 20, 30, 75, and 150B) Curve 2-6
Ordering B-5
Outline Diagram (1398-PDM-25, 50, 100, 150) 2-9
Sizing 2-4
Troubleshooting, *see* "Check for Problems in the System"
Typographical Conventions P-4

U

Underwriter Laboratories
Listing 2-22

V

Velocity calculation error 5-5
Ventilation 2-3

W

Watchdog
Watchdog Reset error 5-7
Watchdog Test Fault error 5-7
Wording Conventions P-4

For more information refer to our web site: **www.ab.com/motion**
For Rockwell Automation Technical Support information refer to: www.rockwellautomation.com/support or Tel: (1) 440.646.3434

www.rockwellautomation.com

Power, Control and Information Solutions Headquarters

Americas: Rockwell Automation, 1201 South Second Street, Milwaukee, WI 53204-2496 USA, Tel: (1) 414.382.2000, Fax: (1) 414.382.4444
Europe/Middle East/Africa: Rockwell Automation, Vorstlaan/Boulevard du Souverain 36, 1170 Brussels, Belgium, Tel: (32) 2 663 0600, Fax: (32) 2 663 0640
Asia Pacific: Rockwell Automation, Level 14, Core F, Cyberport 3, 100 Cyberport Road, Hong Kong, Tel: (852) 2887 4788, Fax: (852) 2508 1846

Publication 1398-5.1 — January 2000 PN 0013-1048-002 Rev A
Supersedes Publication 1398-5.1 — August 1997

© 2000 Rockwell International Corporation. Printed in the U.S.A..