Installation Instructions

Original Instructions

Allen-Bradley by ROCKWELL AUTOMATION

VisiSight M20A General Purpose Photoelectric Sensors

Catalog Numbers 42JA-B2LNA1-*xx*, 42JA-B2LNA2-*xx*, 42JA-B2LPA1-*xx*, 42JA-B2LPA2-*xx*, 42JA-C2LNA1-*xx*, 42JA-C2LPA1-*xx*, 42JA-D2LNA1-*xx*, 42JA-D2LPA1-*xx*, 42JA-E1EZB1-*xx*, 42JA-E2EZB1-*xx*, 42JA-N2LNA2-*xx*, 42JA-N2LPA2-*xx*, 42JA-P2LNA1-*xx*, 42JA-P2LPA1-*xx*, 42JA-R1LNA1-*xx*, 42JA-R1LPA1-*xx*, 42JA-R2LNA1-*xx*, 42JA-R2LPA1-*xx*, 42JA-W2LPA1-*xx*

Topic	Page
Summary of Changes	1
Description	1
Features	1
Status Indicators and User Interface	1
Specifications	2
Wiring	2
Approximate Dimensions	2
Typical Response Curves	3
Additional Resources	4

Summary of Changes

This publication contains the following new or updated information. This list includes substantive updates only and is not intended to reflect all changes.

Topic	Page
Added Clear Object Teach Process section.	1
Added UKCA certification.	2

Description

42JA VisiSight™ M20A photoelectric sensors offer a wide range of sensing modes and an adjustable knob that simplifies sensitivity adjustment and offers light versus dark operate output selection.

The VisiSight offers a small rectangular package with visible light beam for ease of alignment and industry standard mounting hole spacing of 25.4 mm (1 in.).

Features

- Visible light source offered on all models for ease of alignment
- Selectable light operate or dark operate adjustment knob
- Wide range of sensing modes
- 360° visible status indicators
- Additional transmitted beam models available with Infrared light source for excellent cross talk immunity
- Input to disable light source on transmitted beam emitter
- IP67 rated enclosure

Status Indicators and User Interface

Diffuse, Polarized Retroreflective, Background Suppression, Background Reflection, Transmitted Beam, and Wide Angle Diffuse

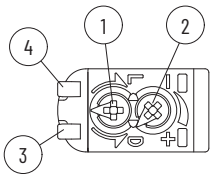

Item	Description
1	Light or dark operate selection
2	Sensing range adjustment knob
3	Orange status indicator
4	Green status indicator

Clear Object Detection

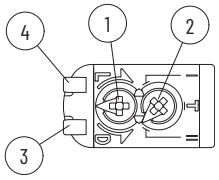

Item	Description
1	Light or dark operate selection
2	Teach knob
3	Orange status indicator
4	Green status indicator

Table 1 provides indicator status in the RUN mode, during operation for diffuse, polarized retroreflective, background suppression, background reflection, transmitted beam, and wide angle diffuse models.

Table 1 - Operating Mode Indication

Status Indicator Color	Status	Description
Green	OFF	Power is OFF
	ON	Power is ON
Orange	OFF	Output de-energized
	ON	Output energized

For clear object detection mode, the adjustment knob has three settings:

- Teach mode
- 18% contrast mode
- 40% contrast mode

Clear Object Teach Process

To teach clear object detection:

1. Place the reflector at the desired distance away from the sensor.

IMPORTANT The sensor and the reflector must remain stationary and cannot change position during the teach-in process, otherwise the sensor must be reprogrammed.

2. To start the teach process, turn the potentiometer to the T position. The green and orange status indicators start to flash.
3. Turn the potentiometer to either the I or II position depending on what object you are trying to sense.
   - Position I must see an 18% change and works for most clear applications.
   - Position II must see a 40% change in the returned light from the reflector.

During the teach process, no objects can block the light path between sensor and reflector. The sensor is programming itself to the reflector to determine how much light is returned. That becomes 100% and from there you can choose either an 18% or 40% change to make the output switch.

Rockwell Automation

Specifications

Attribute	Value
Certifications	CE Marked for all applicable directives, UKCA Marked for all applicable regulations, and cULus Listed
EMC Directive	EN 60947-5-2
Standards	UL 60947-5-2
Ambient light immunity	EN 60697-5-2
Functional Safety Parameters	
MTTFd	860 a
Mission Time (TM)	20 a
Diagnostic Coverage (DC)	0%
User Interface	
Status indicators	Green and orange
Adjustments	Two adjustable knobs
Optical	
Light-emitting diode (LED)	Red and Infrared (specific transmitted beam models)
Electrical	
Operating voltage	10 ...30V DC
Current consumption	<20 mA
Sensor protection	Reverse polarity and short circuit
Load current	100 mA max, resistive load
Output	
Output types	1 x PNP or 1 x NPN by catalog number
Response Time	
Diffuse	0.5 ms
Wide angle diffuse	0.5 ms
Background suppression	1 ms
Background reflection	1 ms
Polarized retroreflective	0.5 ms
Transmitted beam	2 ms
Clear object detection	0.5 ms
Mechanical	
Housing material	PC (Polycarbonate)
Lens material	PMMA
Environmental	
Enclosure rating	IP67
Operating temperature	-30...+60 °C (-22...+140 °F)

Wiring

The quick disconnect connector is shown in Figure 1. The pin numbers correspond to the prongs on the sensor.

Figure 1 - Pinouts

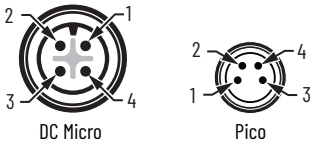

Wiring Diagrams

Figure 2 - PNP Output Wiring

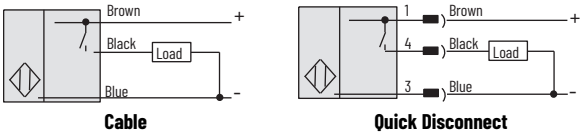

Figure 3 - NPN Output Wiring

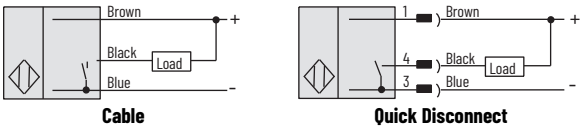

Figure 4 - Transmitted Beam Emitter

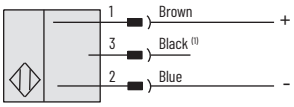

(1) The emitter light source is disabled when this pin is connected to 0V.

Approximate Dimensions

Figure 5 - Integral M8 Pico QD Models

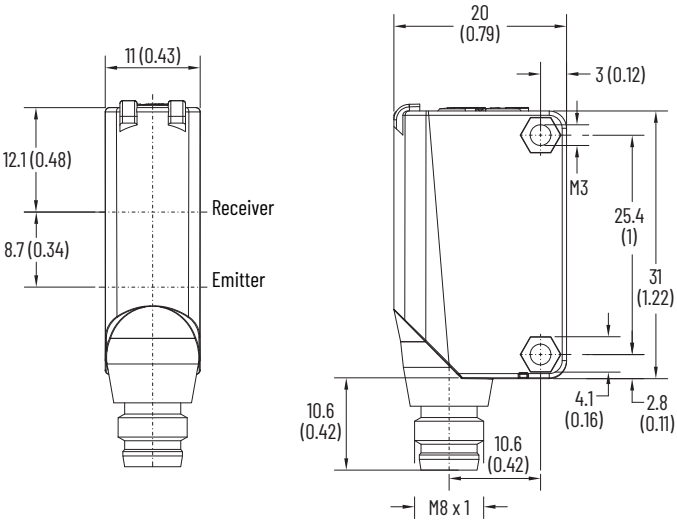

Figure 6 - 2 m (6.6 ft) Cable, 4-pin M12 QD on 300 mm (11.8 in.) Pigtail, 4-pin M8 QD on 300 mm (11.8 in.) Pigtail Models

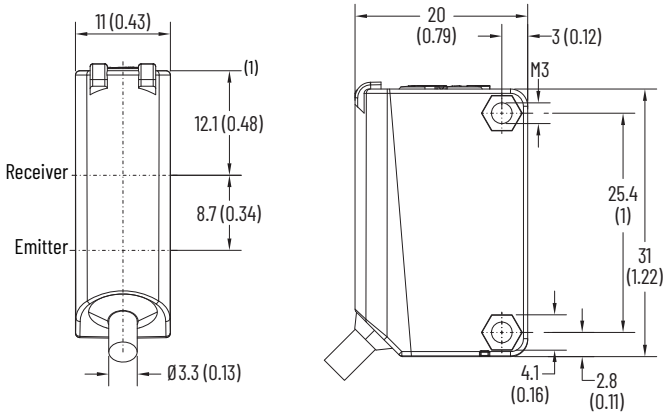

(1) For the transmitted beam emitter, the LED centerline is located 14.1 mm (0.56 in.) lower than this point.

Typical Response Curves

Figure 7 - Background Suppression - Beam Pattern

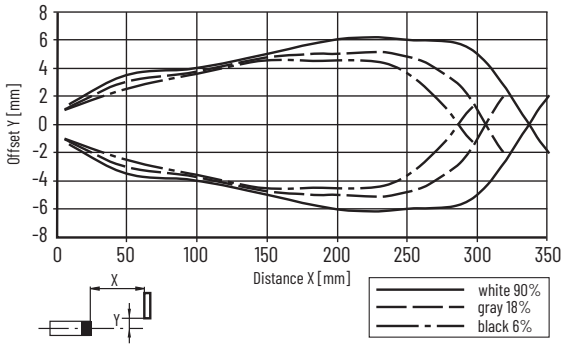

Figure 8 - Background Suppression - Detection Distance

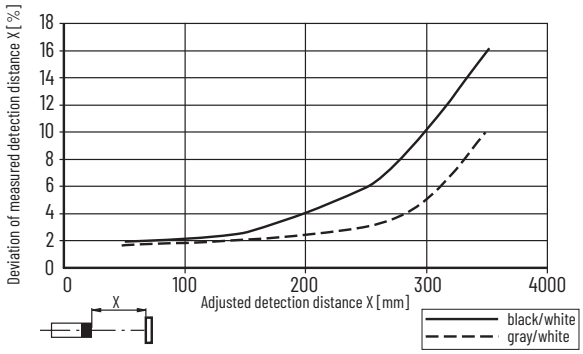

Figure 9 - Background Reflection - Minimum Object Height

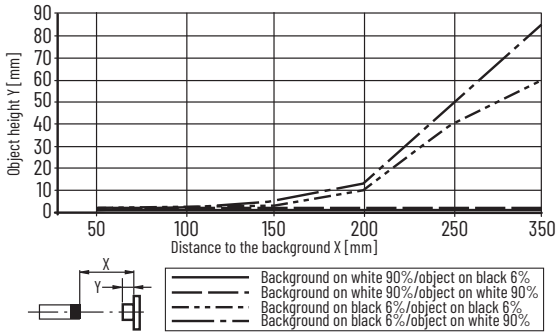

Figure 10 - Polarized Retroreflective - Beam Pattern

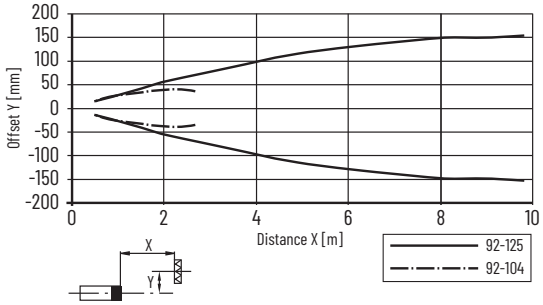

Figure 11 - Diffuse - Beam Pattern

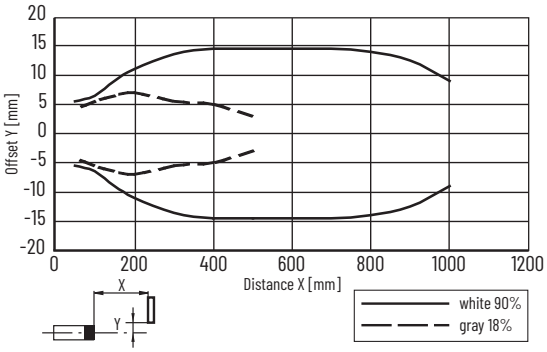

Figure 12 - Diffuse - Margin Curve

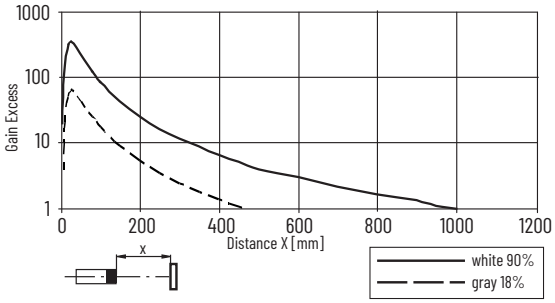

Figure 13 - Diffuse - Detection Ranges

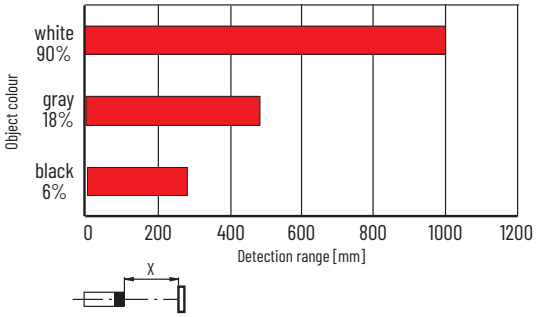

Figure 14 - Clear Object Detection - Beam Pattern

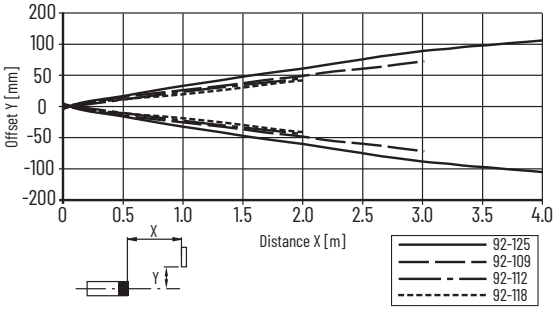

Figure 15 - Transmitted Beam - Beam Pattern

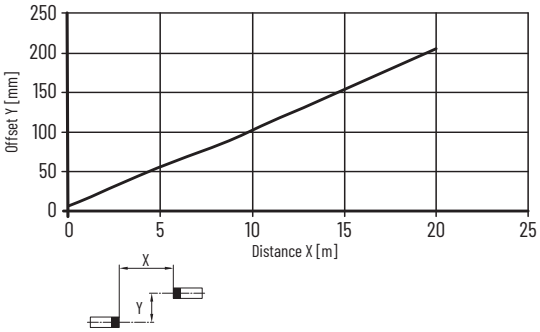

Figure 16 - Transmitted Beam - Margin Curve

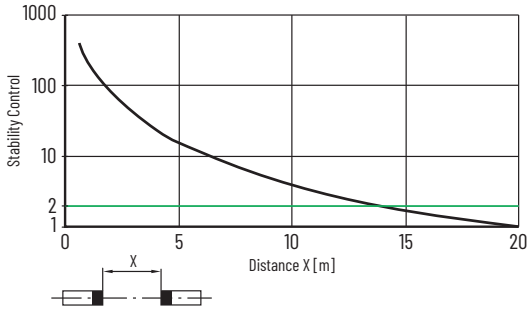

Figure 17 - Wide Angle Diffuse - Margin Curve

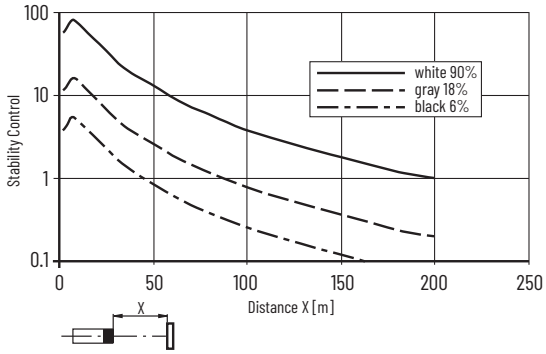

Figure 18 - Wide Angle Diffuse - Beam Pattern

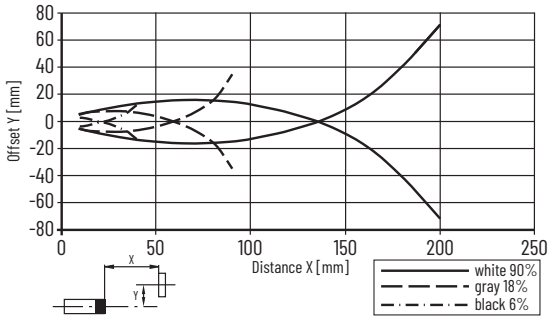

Figure 19 - Wide Angle Diffuse - Detection Ranges

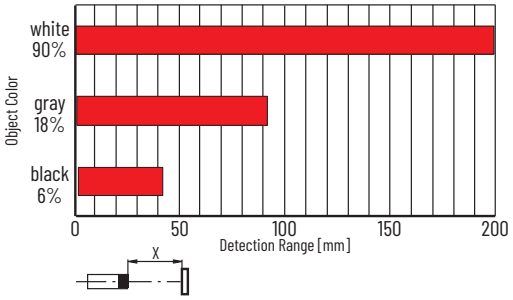

Additional Resources

To download publications, visit rok.auto/literature and search for the following publication numbers.

Resource	Description
VisiSight M20A General Purpose Photoelectric Sensors Installation Instructions, publication 42JA-TD001	Provides information to select, install, and wire a VisiSight M20A sensor.
Industrial Automation Wiring and Grounding Guidelines, publication 1770-4.1	Provides general guidelines for installing a Rockwell Automation industrial system.
Product Certifications website rok.auto/certifications.	Provides declarations of conformity, certificates, and other certification details.

Waste Electrical and Electronic Equipment (WEEE)

At the end of life, this equipment should be collected separately from any unsorted municipal waste.

Rockwell Automation maintains current product environmental compliance information on its website at rok.auto/pec.

Your comments help us serve your documentation needs better. If you have any suggestions on how to improve our content, complete the form at rok.auto/docfeedback.
For technical support, visit rok.auto/support.

Rockwell Otomasyon Ticaret A.Ş. Kar Plaza İş Merkezi E Blok Kat:6 34752, İçerenköy, İstanbul, Tel: +90 (216) 5698400 EEE Yönetmeliğine Uygundur

Connect with us.

rockwellautomation.com — expanding **human possibility**®

AMERICAS: Rockwell Automation, 1201 South Second Street, Milwaukee, WI 53204-2496 USA, Tel: (1) 414.382.2000, Fax: (1) 414.382.4444
EUROPE/MIDDLE EAST/AFRICA: Rockwell Automation NV, Pegasus Park, De Kleetlaan 12a, 1831 Diegem, Belgium, Tel: (32) 2 663 0600, Fax: (32) 2 663 0640
ASIA PACIFIC: Rockwell Automation, Level 14, Core F, Cyberport 3, 100 Cyberport Road, Hong Kong, Tel: (852) 2887 4788, Fax: (852) 2508 1846

Allen-Bradley, expanding human possibility, Rockwell Automation, and VisiSight are trademarks of Rockwell Automation, Inc.
Trademarks not belonging to Rockwell Automation are property of their respective companies.

Publication 42JA-IN001B-EN-P - July 2022 | Supersedes Publication 42JA-IN001A-EN-P - May 2021
Copyright © 2022 Rockwell Automation, Inc. All rights reserved. Printed in the U.S.A.
10005698324 Ver 01