Technical Data

Allen-Bradley

Vacuum Contactor and Starter Specifications

Bulletin Numbers 1102C, 1104C, 1109

Topic	Page
Specifications	2
1102C Approximate Dimensions	3…4
1104C Approximate Dimensions	5
1109 Approximate Dimensions	6…11

Additional Resources

These documents contain additional information concerning related products from Rockwell Automation.

Resource	Description
Industrial Automation Wiring and Grounding Guidelines, publication 1770-4.1	Provides general guidelines for installing a Rockwell Automation industrial system.
Product Certifications website, http://www.ab.com	Provides declarations of conformity, certificates, and other certification details.

You can view or download publications at http://www.rockwellautomation.com/literature/. To order paper copies of technical documentation, contact your local Allen-Bradley distributor or Rockwell Automation sales representative.

LISTEN.
THINK.
SOLVE.®

Allen-Bradley • Rockwell Software

Rockwell Automation

	200 A	400 A	600 A
Standards	UL 508 CSA 22.2 1500V	UL 508 CSA 22.2 1500V	UL 508 CSA 22.2 1500V
Power Ratings			
Insul. & Operating Voltage	200…1500V	200…1500V	200…1500V
Rated Fequency	50…400 Hz	50…400 Hz	50…400 Hz
Making Current Capacity	1600 A	3200 A	4800 A
Breaking Current Capacity	1600 A	3200 A	4800 A
Dielectric Strength	6Kv - 1 Min. Interrupter GAP	6Kv - 1 Min. Interrupter GAP	6Kv - 1 Min. Interrupter GAP
Interrupting Current (Max.)	2.2 kA	4.6 kA	6 kA
Short Circuit Withstand (Max.)	10 kA symmetrical amps @ 1500V AC	18 kA symmetrical amps @ 1500V AC	30 kA symmetrical amps @ 1500V AC
Mechanical Life	1 200 000	1 000 000	750 000
Elect. Life AC3 Duty	500 000	500 000	250 000
Switching Frequency (Mechanical) 1102C, 1109 1104C	600/hr (max.) 6 s (full cycle)	600/hr (max.) 6 s (full cycle)	600/hr (max.) 6 s (full cycle)
Withstand current for 3 sec [kA]	3.2	6.0	6.5
Chop Current Max.	0.9 A	0.9 A	0.9 A
Control Ratings			
Coil Voltage Operation	-15% +10%	-15% +10%	-15% +10%
Inrush Power VA	1200VA	1100VA	1600VA
Sealed Power VA	12VA	12VA	14VA
Opening Time [ms]	120	160	160
Closing Time [ms]	20…40	20…40	30…40
Pick-Up Voltage	80% Cold 85% Hot	80% Cold 85% Hot	80% Cold 85% Hot
Drop-Out Voltage	70% or less	70% or less	70% or less
Application Ratings			
Mounting Installation	All planes	All planes	All planes
Altitude	6600 ft (2000 m)	6600 ft (2000 m)	6600 ft (2000 m)
Ambient Storage	-65…+160 °F (-54…71 °C)	-65…+160 °F (-54…71 °C)	-65…+160 °F (-54…71 °C)
Operating Temperature	-40…+135 °F (-40…57 °C)	-40…+135 °F (-40…57 °C)	-40…+135 °F (-40…57 °C)
Vibration/Shock	40 Hz: 2 G/30 G	40 Hz: 2 G/30 G	40 Hz: 2 G/30 G

Dimensions are shown in inches (millimeters). Dimensions are not intended to be used for manufacturing purposes.

Bulletin 1102C (200 A)

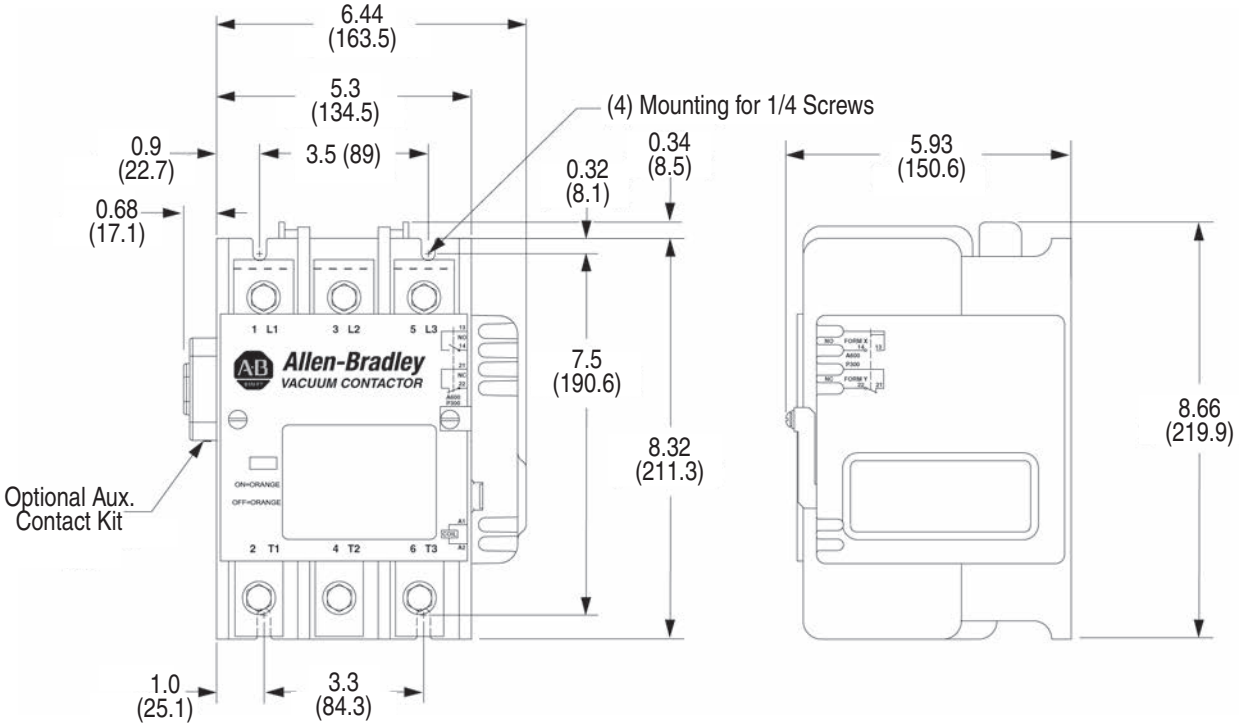

Dimensions are shown in inches (millimeters). Dimensions are not intended to be used for manufacturing purposes.

Bulletin 1102C (400 A and 600 A)

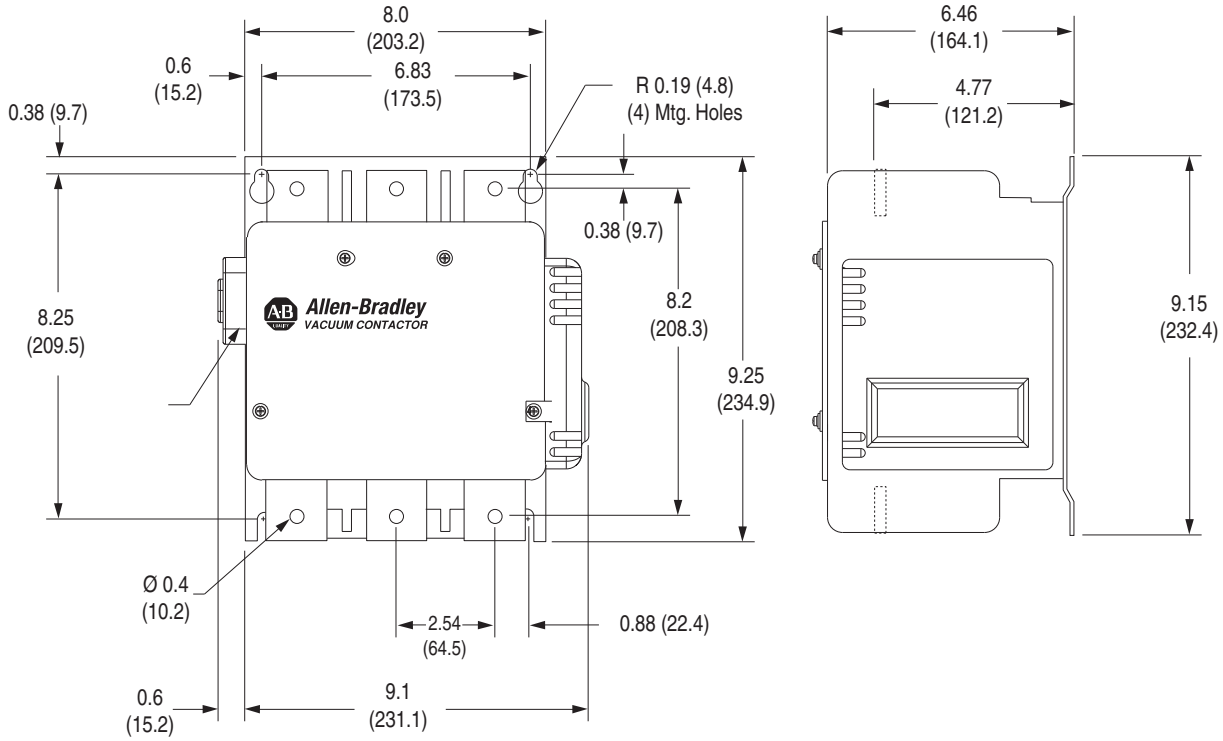

400 A

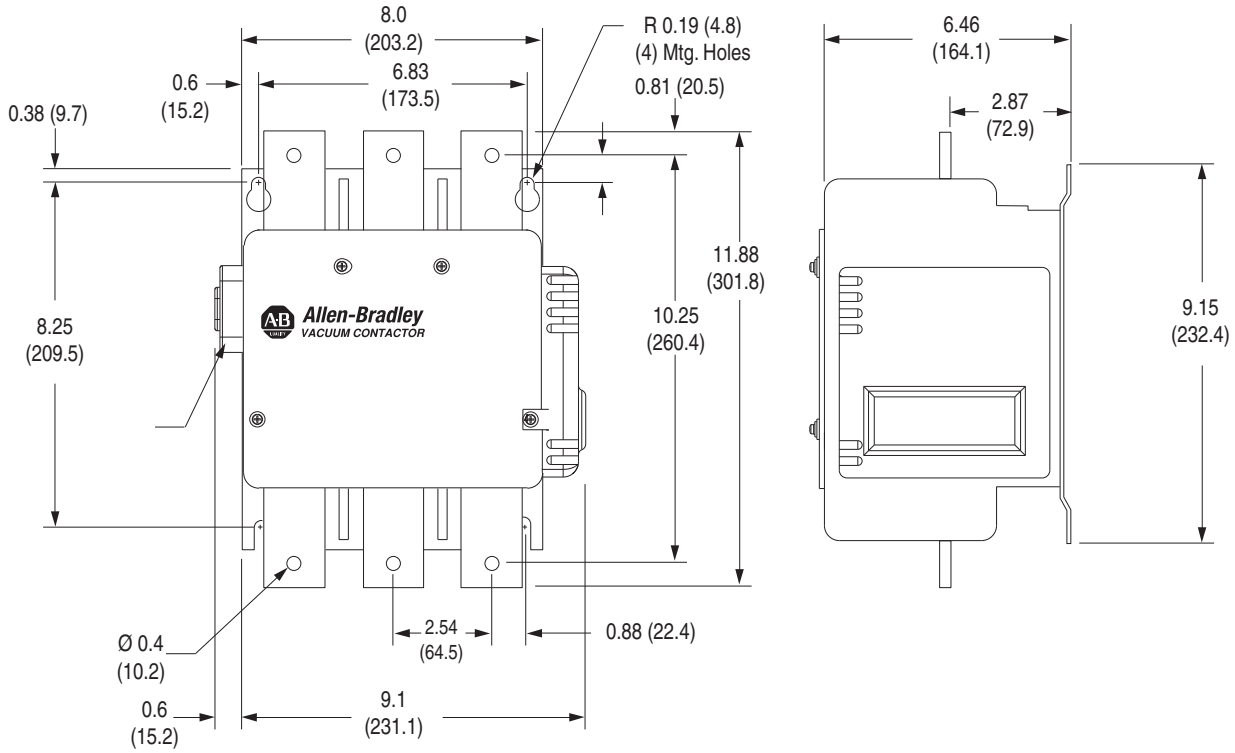

600 A

Dimensions are shown in inches (millimeters). Dimensions are not intended to be used for manufacturing purposes.

Bulletin 1104C (200, 400, 600 A)

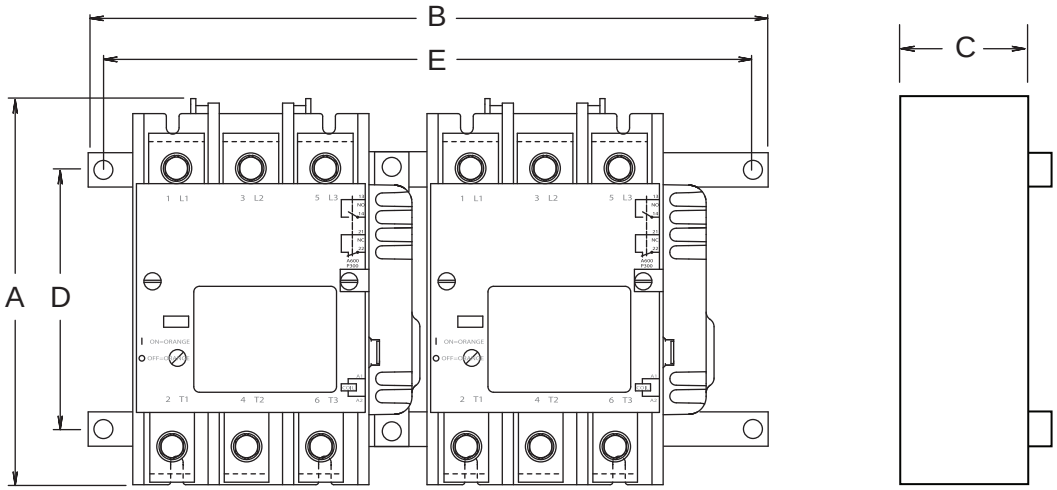

Contactor Size [A]	A Height	B Width	C Depth	D Mounting Height	E Mounting Width
200	8.375 (213)	14 (358)	6.5 (202)	7 (210)	13 (322)
400	9.25 (235)	21 (533)	7.10 (232)	7.85 (272)	19.5 (495)
600	12 (305)	21 (533)	7.10 (232)	10.82 (280)	19.5 (495)

Dimensions are shown in inches (millimeters). Dimensions are not intended to be used for manufacturing purposes.

Bulletin 1109 (200 A)

With E1 Plus Overload

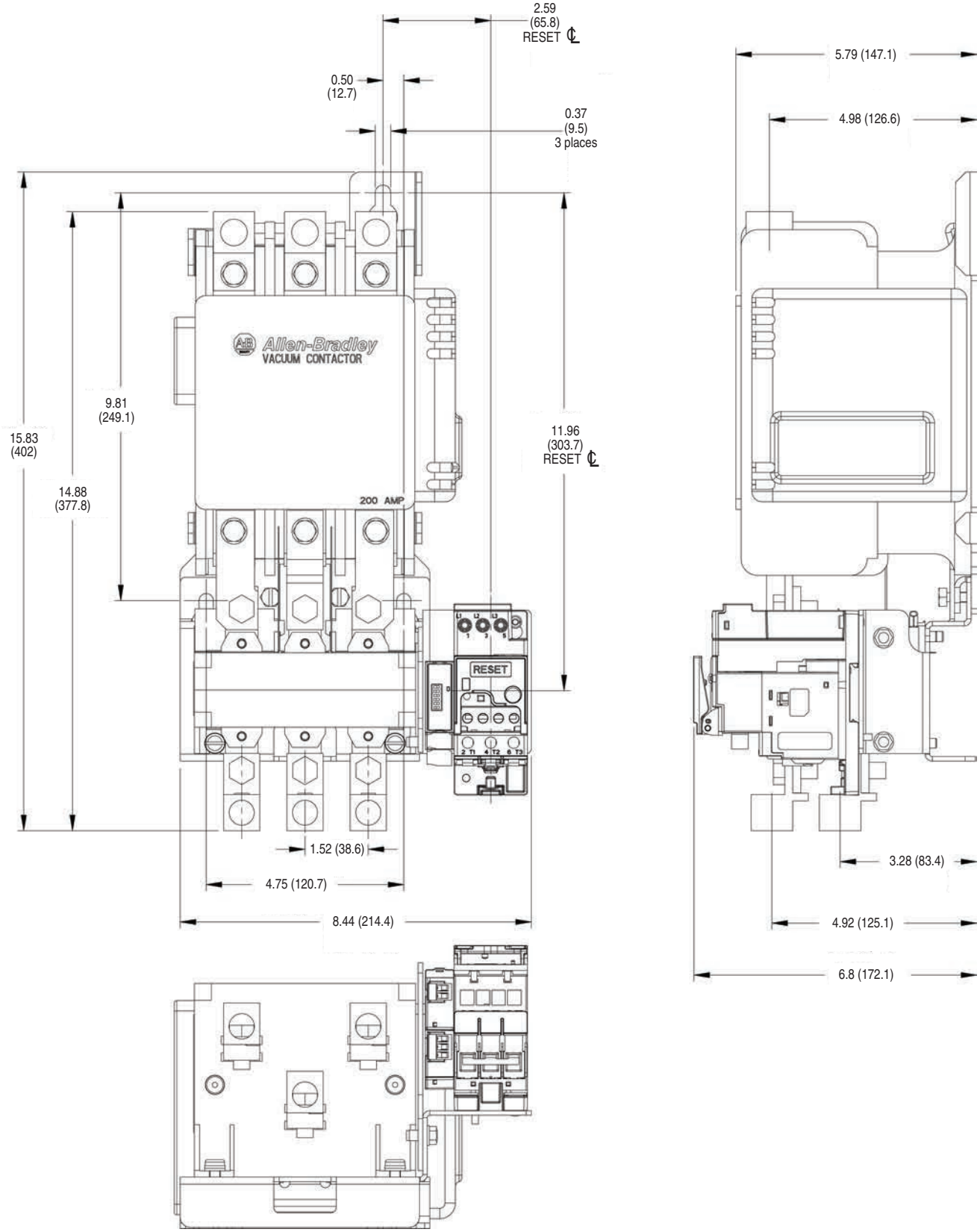

Dimensions are shown in inches (millimeters). Dimensions are not intended to be used for manufacturing purposes.

Bulletin 1109 (200 A), Continued

With Eutectic Overload

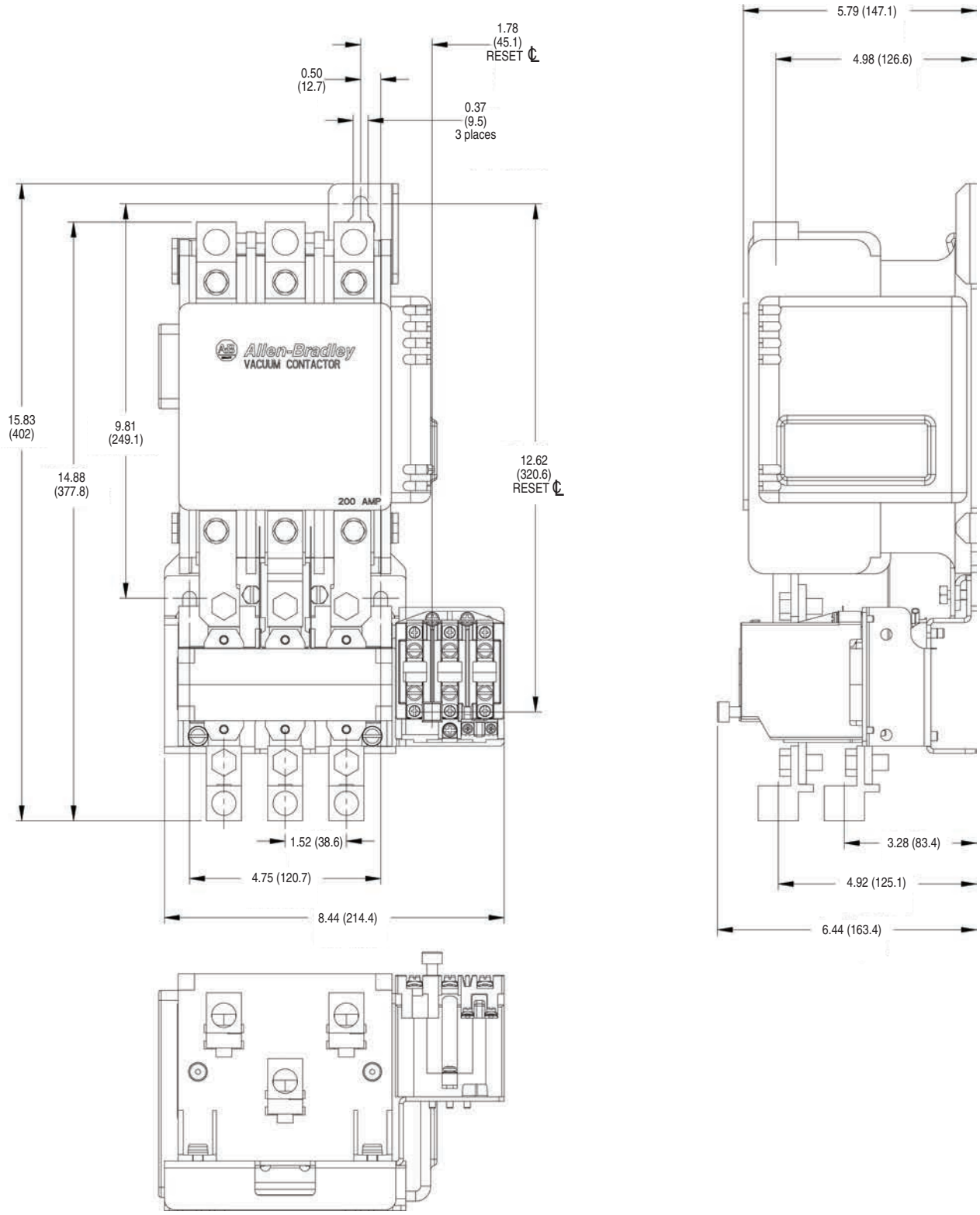

Dimensions are shown in inches (millimeters). Dimensions are not intended to be used for manufacturing purposes.

Bulletin 1109 (400 A)

With E1 Plus Overload

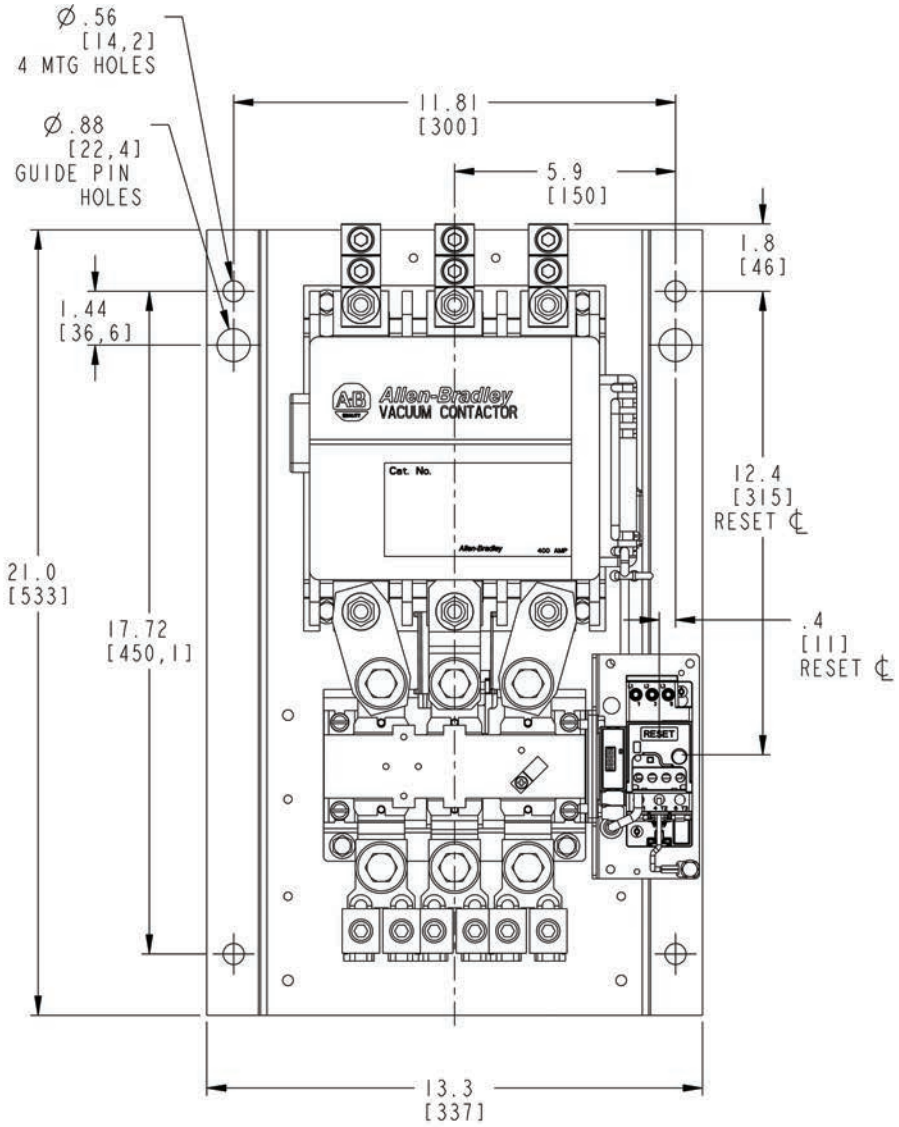

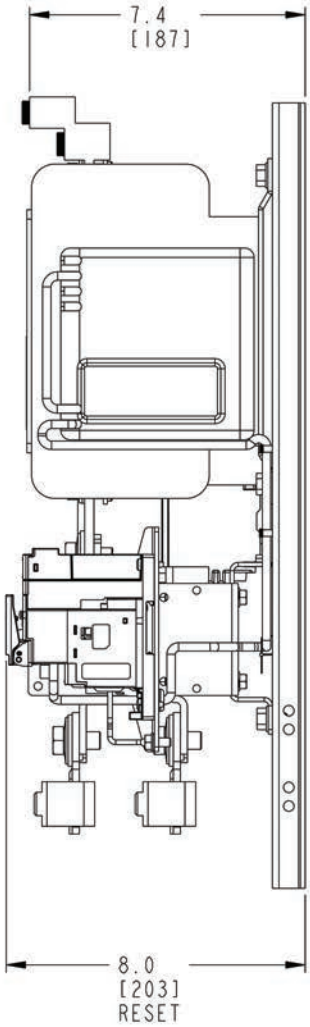

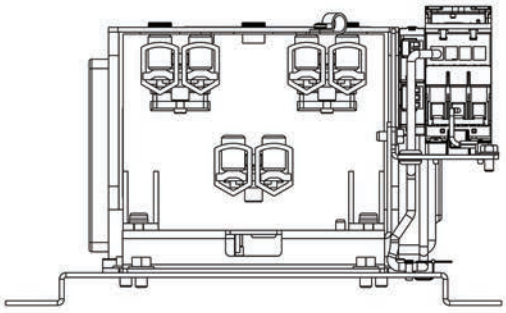

Dimensions are shown in inches (millimeters). Dimensions are not intended to be used for manufacturing purposes.

Bulletin 1109 (400 A), Continued

With Eutectic Overload

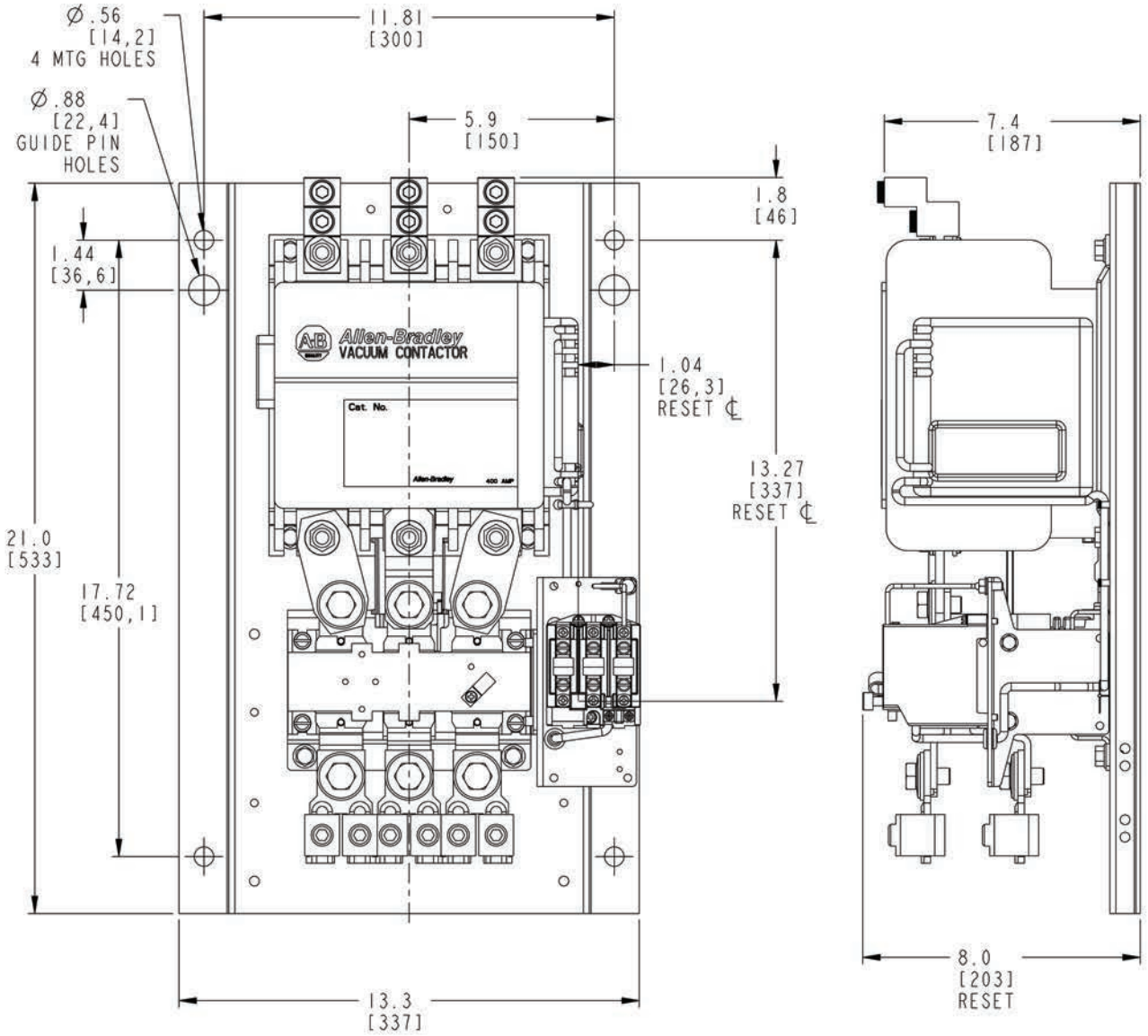

Dimensions are shown in inches (millimeters). Dimensions are not intended to be used for manufacturing purposes.

Bulletin 1109 (600 A)

With E1 Plus Overload

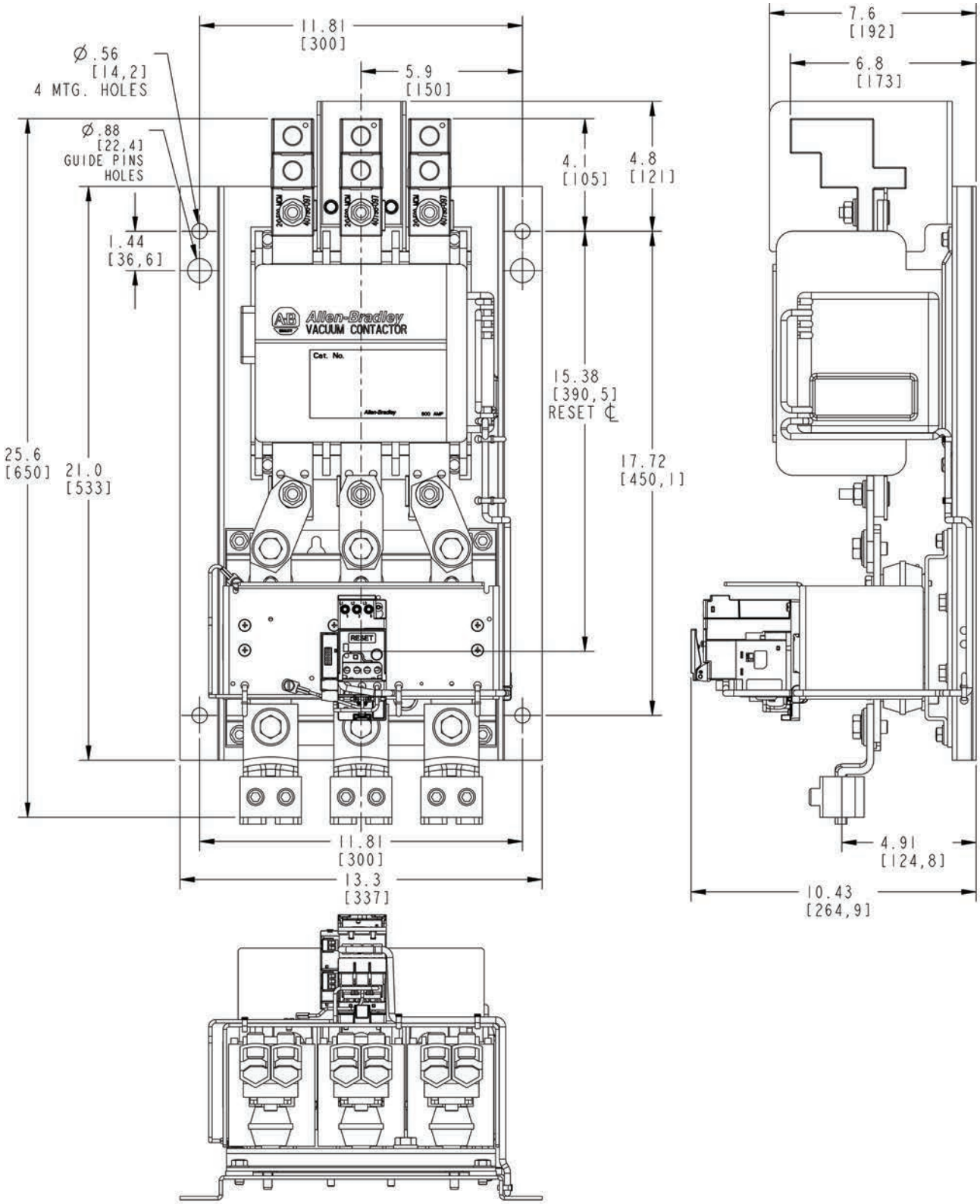

Dimensions are shown in inches (millimeters). Dimensions are not intended to be used for manufacturing purposes.

Bulletin 1109 (600 A), Continued

With Eutectic Overload

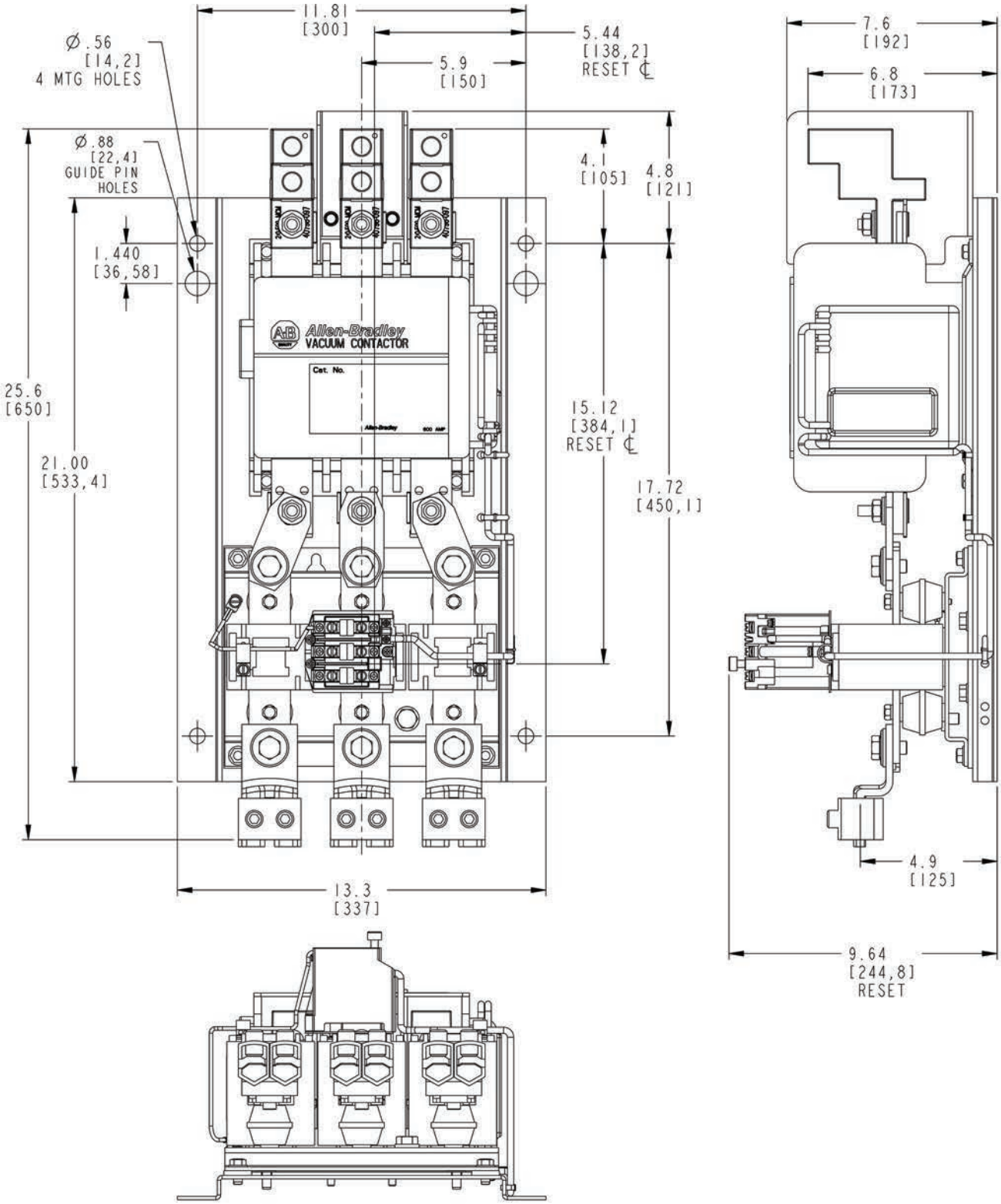

Important User Information

Read this document and the documents listed in the additional resources section about installation, configuration, and operation of this equipment before you install, configure, operate, or maintain this product. Users are required to familiarize themselves with installation and wiring instructions in addition to requirements of all applicable codes, laws, and standards.

Activities including installation, adjustments, putting into service, use, assembly, disassembly, and maintenance are required to be carried out by suitably trained personnel in accordance with applicable code of practice.

If this equipment is used in a manner not specified by the manufacturer, the protection provided by the equipment may be impaired.

In no event will Rockwell Automation, Inc. be responsible or liable for indirect or consequential damages resulting from the use or application of this equipment.

The examples and diagrams in this manual are included solely for illustrative purposes. Because of the many variables and requirements associated with any particular installation, Rockwell Automation, Inc. cannot assume responsibility or liability for actual use based on the examples and diagrams.

No patent liability is assumed by Rockwell Automation, Inc. with respect to use of information, circuits, equipment, or software described in this manual.

Reproduction of the contents of this manual, in whole or in part, without written permission of Rockwell Automation, Inc., is prohibited.

Documentation Feedback

Your comments will help us serve your documentation needs better. If you have any suggestions on how to improve this document, complete this form, publication RA-DU002, available at http://www.rockwellautomation.com/literature/.

Allen-Bradley, Rockwell Software, Rockwell Automation, and LISTEN. THINK. SOLVE are trademarks of Rockwell Automation, Inc.
Trademarks not belonging to Rockwell Automation are property of their respective companies.

Rockwell Otomasyon Ticaret A.Ş., Kar Plaza İş Merkezi E Blok Kat:6 34752 İçerenköy, İstanbul, Tel: +90 (216) 5698400

www.rockwellautomation.com

Power, Control and Information Solutions Headquarters

Americas: Rockwell Automation, 1201 South Second Street, Milwaukee, WI 53204-2496 USA, Tel: (1) 414.382.2000, Fax: (1) 414.382.4444
Europe/Middle East/Africa: Rockwell Automation NV, Pegasus Park, De Kleetlaan 12a, 1831 Diegem, Belgium, Tel: (32) 2 663 0600, Fax: (32) 2 663 0640
Asia Pacific: Rockwell Automation, Level 14, Core F, Cyberport 3, 100 Cyberport Road, Hong Kong, Tel: (852) 2887 4788, Fax: (852) 2508 1846

Publication 1100-TD004A-EN-P - August 2014

Copyright © 2014 Rockwell Automation, Inc. All rights reserved. Printed in the U.S.A.