Installation Instructions
PHOTOSWITCH® Liquid Level and Resistance Sensing Control
Bulletin 13DJ3-3000

IMPORTANT: SAVE THESE INSTRUCTIONS FOR FUTURE USE.

Product Data

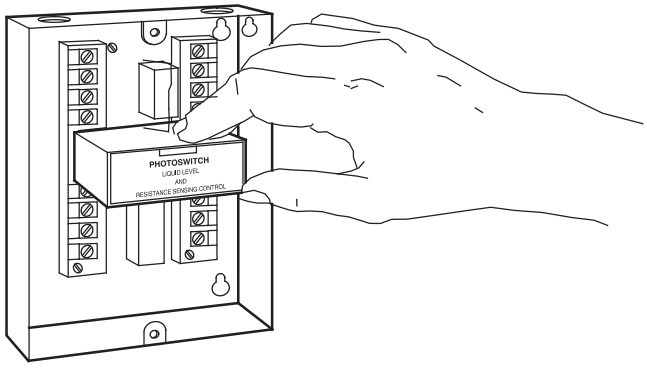

Description

The PHOTOSWITCH Bulletin 13DJ3 Series 3000 is a high sensitivity Liquid Level Control designed to detect the level of conductive liquids or solids with a moisture content as low as 5%.

Features

- Very high sensitivity—up to 60 megohms cm liquid resistivity
- Compact, all solid state, plug-in, modular design for reliability with flexibility
- DPDT EM relay and 12V DC solid state outputs. Optional solid state logic outputs
- Low probe voltage isolated from line voltage
- Fast response time
- Wide selection of probe assemblies
- All molded parts of rugged, impact resistant polyphenylene oxide (PPO) and polystyrene (PS)
- Heavy-duty easy to wire terminals
- High voltage connections isolated from low voltage
- Ambient temperature range: -40 to 135°F (-40 to 57°C)

General

The Bulletin 13DJ3 Series 3000 Conductive Liquid Level Control is designed to provide a reliable level detection of conductive liquids or solids. No moving parts or floats are required. Metal probe rods are placed in the conductive liquid at the desired levels. The liquid or solid conductive material completes the circuit between the probe rod or rods to the metal material container. If the container is non-conductive (fiberglass, cement, etc.), an additional probe rod is used as a grounding probe to complete the electrical circuit. Completion of the circuit will cause the output relay to operate. The relay contacts may be used for pump, valve, or motor control; audible and/or visual level indication.

The controls will operate over a resistivity range of 0 to 60 MegOhms cm. This permits the sensing of liquids or solids with very low conductivity such as antibiotics, refrigerants, or sand with a moisture content as low as 5%.

In addition to high sensitivity, the control has a fast response time and can be wired for electronic control latching on certain applications, allowing the use of both sets of relay contacts for external loads.

A solid-state output signal can be obtained from the control simultaneously with a relay output. This signal can be used for electronic counting, data logging, or feeding information to a computer.

The control has protection against false operation due to line voltage transients, line voltage dropouts of 1/2 second or less, or during initial power up. These features allow the 13DJ3 Series 3000 Control to be used in solving the more difficult industrial level applications.

Resistance Sensing Control

PHOTOSWITCH Bulletin 13DJ3 is also designed to be used as a resistance sensing control. In this application the control operates as an electronic switch which converts the minute current flow through delicate mechanisms or extremely light contacts into a switching output capable of handling relatively heavy electrical loads. The maximum sensitivity of the control when used for resistance sensing is 15 megohms.

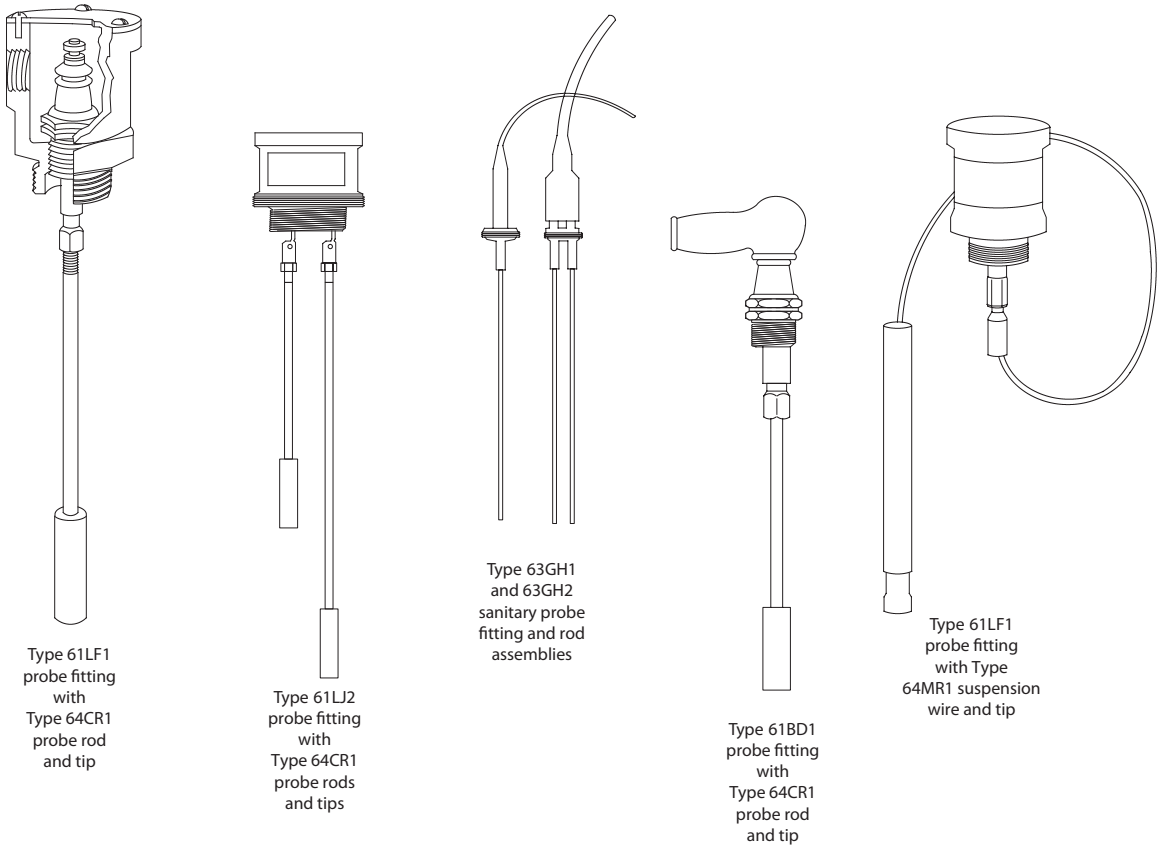

Figure 1: Probes for Level Controls Series 61, 63, 64

Probe Assemblies

A selection of probe assemblies is available for a wide variety of applications. The probe assembly consists of a probe fitting threaded for convenient installation into a tank, vat, or other container; a stainless steel probe rod or insulated suspension wire which may be cut to the desired length for the particular installation; and a probe tip designed to provide the required surface area at a point of contact with the liquid. Figure 1 shows typical probe assemblies.

Series 61 probe fittings are ceramic insulated with stainless steel trim which may be used either alone or in one of a variety of metal enclosures. Single and double probe fittings are available. Series 63 sanitary probe fittings are available for dairy and other food processing installations. Sanitary probes do not require probe tips for satisfactory operation.

Series 64 probe tip assemblies are combinations of a probe rod or suspension wire of the desired length with a suitable probe tip and are used with all Series 61 probe fittings.

Table 1: Level and Resistance Control

Bulletin Number	Control Base	Output	Voltage Supply	Output Characteristics			Response Time	Resistivity Range
				Type	Rating	Leakage		
13DJ3-3000				—	—	—	Refer to Table 7	Refer to Table 6
	60-1600B		120V AC 50/60 Hz	—	—	—		
	60-1601B		240V AC 50/60 Hz	—	—	—		
		8-670 supplied with control base		DPDT EM Relay	5A, 120V AC 2.5A, 240V AC 1A, 120V DC	—		
		8-651		SPNO TRIAC AC	1A, 265V AC 20mA min.	1mA		
		8-652		SPNO FET AC/DC	30mA, 120V AC/DC	10µA		
		63-116		Voltage DC Output	30mA, 24V DC	—		
		63-115		NPN Open Collector	250mA, 24V DC	1mA		

Specifications

Power Consumption: 3 watts (includes control base)

Resistivity Range: Typical liquid resistivity 0-60 MegOhms • centimeter (See Table 5)

Resistance Sensing Sensitivity: 0-15 MegOhms in six ranges. (See Table 6, Consult factory for higher ranges.)

Maximum Probe Voltage: 22.5VAC (Ranges 1, 2, & 3), 29 VAC (Ranges 4, 5, & 6) (See Table 6)

Maximum Probe Current: 65 mA to 0.001 mA. (See Table 6)

Solid State Output Signal: 12V DC open circuit limited to 30mA short circuit. Terminals #5 and #2 on Control Base.

Speed of Response: 0.003 sec. to 0.20 sec. (See Table 7)

Permissible Lead Length: Up to 2,000 ft (609.6 m) (See Table 8) Use #16 AWG wire minimum

Ambient Temperature: -40 to 135°F (-40 to 57°C)

Table 2: Probe Fittings

Bulletin Number	Description	Rods or Wires Used	Housing Material	Fitting Pipe Thread	Maximum Temperature	Maximum Pressure psi
61BD1-1000	Probe fitting with rubber cap	1	None	1/2 in.	300°F 149°C	250 (1,724 kPa)
61LF1-1000	Probe fitting in cast enclosure	2	Bronze	1 in.		200 (1,378 kPa)
61LF1-1000M			316 Stainless Steel			
61LJ2-1000	Two probe fittings in cast enclosure		Bronze	2 in.		250 (1,724 kPa)
61LJ2-1000			316 Stainless Steel			200 (1,378 kPa)
63GH1-1000	Special sanitary probe with 3 ft (0.91 m) probe rod(s) supplied with 10 ft (3 m) cable and separable connector	1	None	Fits 1 1/2 in. LAMD 13H nut for #15 Union Ferrule	212°F 100°C	—
63GH2-1000		2				
63GJ1-1000		1		Fits 2 in. LAMD 13H nut for #15 Union Ferrule		
63GJ2-1000		2				

Table 3: Probe Rod Assemblies

Bulletin Number	Description
64CR1-1000	316 Stainless Steel Probe Tip and 1/4 in. dia. x 12 in. (0.3 m) Probe Rod
64CR1-1001	316 Stainless Steel Probe Tip and 1/4 in. dia. x 24 in. (0.61 m) Probe Rod
64CR1-1002	316 Stainless Steel Probe Tip and 1/4 in. dia. x 36 in. (0.91m) Probe Rod
64CR1-1003	316 Stainless Steel Probe Tip and 1/4 in. dia. x 48 in. (1.22 m) Probe Rod
64CR1-1004	316 Stainless Steel Probe Tip and 1/4 in. dia. x 72 in. (1.83 m) Probe Rod
64CR1-1005	316 Stainless Steel Probe Tip and 1/4 in. dia. x 96 in. (2.44 m) Probe Rod
64CR1-1006	316 Stainless Steel Probe Tip and 1/4 in. dia. x 120 in. (3 m) Probe Rod

Table 4: Spare Parts

Part Number	Description	Application
3-170	Rubber Cap	For 61BD1
21-49-1	Connector and 10 ft (3 m) Cable Assembly	For 63GH2 – 63GJ2
21-50		For 63GH1 – 63GJ1
31-224	1 1/2 in. diameter Teflon Spacer	Separates double probes when the long probe exceeds 30 in. (76.2 cm)
33-287	1/4–20 UNC Hex Nut	Used with 64CR1 probe assemblies
58-66	Insulation Suspension Wire	Used when the required probe length exceeds 10 ft (3 m)
61-3284	316 SS 5/8? diameter Suspension Wire Probe Tip	Used when the required probe length exceeds 10 ft (3 m)
61-3285	316 SS Adaptor	Connects suspension wire to 61 Series probes
61-3288	316 SS 9/16 in. diameter Probe Tip	Required on all probe rods for rated sensitivity
61-3519	Resistor Package	For 13DJ3–3000

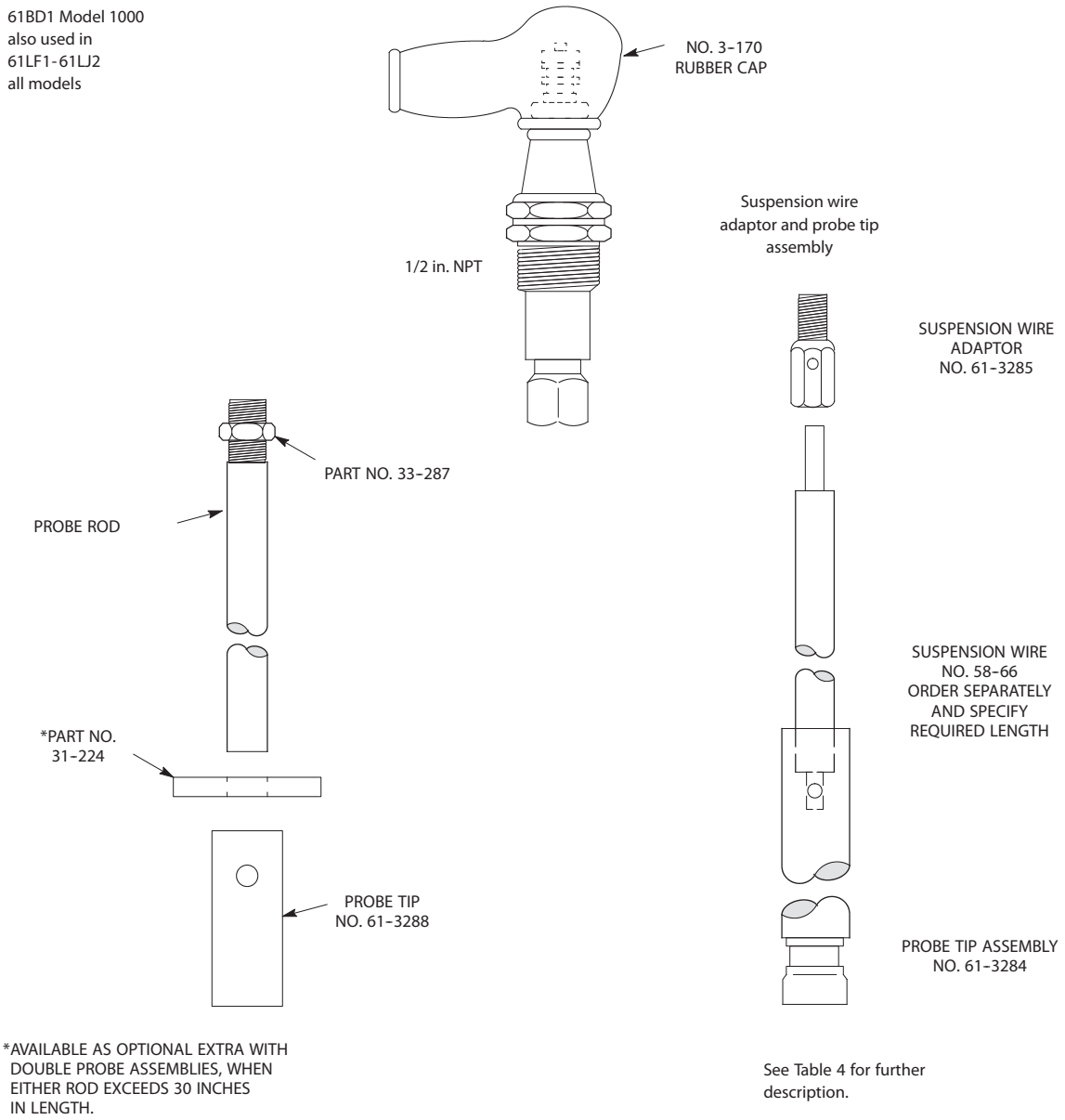
61BD1 Model 1000
also used in
61LF1-61LJ2
all models
NO. 3-170
RUBBER CAP
1/2 in. NPT
Suspension wire
adaptor and probe tip
assembly
SUSPENSION WIRE
ADAPTOR
NO. 61-3285
PART NO. 33-287
PROBE ROD
SUSPENSION WIRE
NO. 58-66
ORDER SEPARATELY
AND SPECIFY
REQUIRED LENGTH
*PART NO.
31-224
PROBE TIP
NO. 61-3288
PROBE TIP ASSEMBLY
NO. 61-3284
*AVAILABLE AS OPTIONAL EXTRA WITH
DOUBLE PROBE ASSEMBLIES, WHEN
EITHER ROD EXCEEDS 30 INCHES
IN LENGTH.
See Table 4 for further
description.

Figure 2

Table 5: Typical Control Ranges and Probe Materials

Typical Liquid	Concentration (% by weight)	Resistivity Range (ohms cm)❶	Control Range	Suitable Probe Material❷
Acetate Acid	5–50	600–1,300	2	HC
Ammonia	6.4–15	1,000–2,000	2	SS
Ammonium Chloride	5–25	2–10	1	HB, HC
Ammonium Iodide	10–50	2–12	1	SS
Ammonium Nitrate	5–50	3–20	1	SS
Ammonium Sulfate	5–30	5–20	1	HC
Antibiotics		200,000–2 MΩ	5	SS
Barium Chloride	10–25	5–15	1	SS
Barium Nitrate	4.2–8.4	30–50	1	SS
Beer		200–2,000	1 or 2	SS
Butyric Acid	1–20	1,000–2,000	2	SS
Cadium Bromide	5–30	35–100	1	SS
Cadium Chloride	5–50	30–60	1	SS
Cadium Iodide	5–45	30–160	1	SS
Cadium Nitrate	5–48	10–20	1	SS
Cadium Sulfate	5–36	20–70	1	SS
Calcium Chloride	5–35	5–15	1	SS
Calcium Nitrate	6–50	10–20	1	SS
Copper Chloride	10–35	10–15	1	HB, HC
Cupric Nitrate	10–35	10–15	1	SS
Cupric Sulfate	2.5–17.5	20–100	1	SS
Distilled Water		20,000–200,000	3	SS
Formic Acid	5–60	100–200	1	SS
Hydrobromic Acid	5–15	2–5	1	HB
Hydrochloric Acid	5–40	1–5	1	HB
Hydrofluoric Acid	5–30	3–20	1	M, HC
Hydroiodic Acid	5	8	1	SS
Lead Nitrate	20–30	15–20	1	SS
Lithium Carbonate	0.2	300	1	SS
Lithium Chloride	5–40	5–15	1	SS
Lithium Hydroxide	1.25–7.5	4–12	1	SS
Lithium Iodide	10–25	5–20	1	SS
Lithium Sulfate	5	25	1	SS
Magnesium Chloride	5–28	10–20	1	M
Magnesium Nitrate	10–17	10–12	1	SS
Magnesium Sulfate	5–25	20–40	1	SS
Mercuric Bromide	0.223–0.422	40,000–60,000	3	SS
Milk		200–2,000	1 or 2	SS
Nitric Acid	5–60	1–5	1	SS
Oxalic Acid	3.5–7	12–20	1	SS
Phosphoric Acid	10–87	5–20	1	HC
Potassium Acetate	10–30	4–18	1	SS
Potassium Bromide	10–36	2–10	1	SS
Potassium Carbonate	5–50	5–20	1	SS
Potassium Chloride	5–20	4–18	1	SS
Potassium Cyanide	3–6	1–20	1	SS
Potassium Fluoride	5–40	5–15	1	SS
Potassium Hydroxide	5–40	2–5	1	M
Potassium Iodide	10–55	5–18	1	SS
Potassium Nitrate	10–20	5–12	1	SS
Potassium Oxalate	10	11	1	SS
Potassium Sulfate	10	12	1	M

Table 5: Typical Control Ranges and Probe Materials (continued)

Typical Liquid	Concentration (% by weight)	Resistivity Range (ohms cm)❶	Control Range	Suitable Probe Material❷
Potassium Sulfide	5–50	2–10	1	SS
Propionic Acid	5–30	900–1,200	2	M
Refrigerants		2MΩ–20MΩ	5 or 6	SS
Silver Nitrate	10–60	5–20	1	SS
Sodium Acetate	20–30	15–18	1	SS
Sodium Carbonate	5–15	10–20	1	SS
Sodium Chloride	5–25	5–15	1	SS
Sodium Hydroxide	20–50	5–20	1	M
Sodium Iodide	10–40	5–20	1	SS
Sodium Nitrate	10–30	7–12	1	SS
Sodium Sulfate	10–15	8–12	1	SS
Sodium Sulfide	2–18	5–20	1	SS
Strontium Chloride	10–20	5–12	1	SS
Strontium Nitrate	10–40	10–15	1	SS
Sulfuric Acid	5–50	1–10	1	HC
Synthetic Latex		2MΩ–20MΩ	6	SS
Tapwater		2,000–20,000	3	SS
Zinc Chloride	10–40	10–15	1	M
Zinc Sulfate	5–30	20–100	1	SS

❶ Measured at normal room temperature

❷ Suitable probe materials
SS = 316 stainless steel (standard)
M = Monel
HB = Hastelloy B2
HC = Hastelloy C

Table 6: Level and Resistance Sensing Ranges

Range	Liquid Resistivity ohms/cm	Resistance Sensing	Range Resistor	Maximum Volts	Maximum Current	Typical Solutions
1	0 – 600	0 – 150Ω	☐ Orange ☐ Orange ☐ Brown 330Ω	22.5 VAC	65 mA	Acids Bases Salts
2	600 – 6,000	150 – 1,500Ω	☐ Red ☐ Violet ☐ Red 2,700Ω	22.5 VAC	8.33 mA	Beer Milk Water
3	6,000 – 60,000	1,500 – 15,000Ω	☐ Red ☐ Violet ☐ Orange 27,000Ω	22.5 V AC	0.83 mA	Water Alcohols Distilled Water
4	60,000 – 0.6MΩ	15,000 – 150,000Ω	☐ Red ☐ Violet ☐ Yellow 270,000Ω	29 V DC	0.1 mA	Alcohols Ammonia Distilled Water
5	.6MΩ – 6MΩ	150,000 – 1.5MΩ	☐ Red ☐ Violet ☐ Green 2.7MΩ	29 V DC	0.01 mA	Antibiotics Refrigerants
6	6MΩ – 60MΩ	1.5 – 15MΩ	☐ Red ☐ Violet ☐ Blue 27MΩ	29 V DC	0.001 mA	Refrigerants Synthetic Latex

Note: All range resistors are 1/2 W ±10% except Range 1, which is 2 W.

Table 7: Speed of Response (seconds)

Range	Solid-State Outputs		Relay Output	
	ON	OFF	ON	OFF
1	0.003	0.060	0.012	0.070
2	0.0035	0.060	0.013	0.070
3	0.004	0.060	0.014	0.070
4	0.006	0.060	0.018	0.070
5	0.023	0.060	0.033	0.070
6	0.190	0.190	0.200	0.200

Ordering Instructions

1. Select 13DJ3-3000

2. Select Control Base

Bulletin Numbers	Voltage Supply	Description
60-1600B	120 VAC 50/60 Hz	Open Type
60-1610B		NEMA 1 Enclosure
60-1601B	230 VAC 50/60 Hz	Open Type
60-1611B		NEMA 1 Enclosure
For NEMA 3, 4, 12, and 13; order open type base and 61–4090 enclosure.		

3. Select Probe Fitting

Bulletin Number	Description	Rods or Wires Used
61BD1-1000	Probe fitting with rubber cap	1
61LF1-1000	Probe fitting in cast enclosure	
61LF1-1000M		
61LJ2-1000	Two probe fittings in cast enclosure	2
61LJ2-1000M		

Note: 61 Series probe fittings require suitable Series 64 probe tips and probe rod or suspension wires shown below.

63GH1-1000	Special sanitary probe with 3 ft (0.91 m) probe rod(s) supplied with 10 ft (3 m) cable and separable connector	1
63GH2-1000		2
63GJ1-1000		1
63GJ2-1000		2

4. Select Probe Rod Assemblies for 61 Series Probe Fittings

Bulletin Number	Description
64CR1-1000	Probe Tip and 1/4 in. dia. x 12 in. (0.3 m) Probe Rod
64CR1-1001	Probe Tip and 1/4 in. dia. x 24 in. (0.61 m) Probe Rod
64CR1-1002	Probe Tip and 1/4 in. dia. x 36 in. (0.91 m) Probe Rod
64CR1-1003	Probe Tip and 1/4 in. dia. x 48 in. (1.22 m) Probe Rod
64CR1-1004	Probe Tip and 1/4 in. dia. x 72 in. (1.83 m) Probe Rod
64CR1-1005	Probe Tip and 1/4 in. dia. x 96 in. (2.44 m) Probe Rod
64CR1-1006	Probe Tip and 1/4 in. dia. x 120 in. (3 m) Probe Rod

Installation

The control point for liquid level is the point at which the liquid makes or breaks contact with the probe tip and is determined by the length of the probe rod. Rods may be ordered to size, or may be supplied longer than required and cut to the desired length. One end of the rod is threaded for connection to the probe fitting. The unthreaded (cut) end should be inserted in the probe tip and held by means of a set screw.

For deep well and other long probe applications over 10 ft (3 m), suspension wires and tips should be installed. Standard probe tip 61-3288, is used with all probe rods. Special probe tip 61-3284 with insulating sleeve, is used with suspension wire.

The probe rod or suspension wire adaptor 61-3285 is connected to the probe fitting as follows:

61 Series fittings have a 1/4-20 female thread to receive the 1/4-20 male thread of the probe rod or suspension wire adaptor.

When the long probe of any multiple probe assembly is over 30 in. (0.76 m), a Teflon insulating spacer 31-224, is fitted over the short probe rod immediately above the probe tip to prevent the rods from touching. For suspension wire assemblies, an insulating sleeve fits over the probe tip to prevent it from touching other surfaces.

Series 63 sanitary probes for dairy and food industry applications are made for special sanitary fittings. The probe insulator is made to fit a #15 union ferrule and to be secured with a #13H union nut. The ferrule and nut are supplied by the customer and are soldered, brazed, or otherwise secured before insertion of the probe assembly. Probes 63GH1 and 63GH2 fit 1-1/2 in. ferrule, while probes 63GJ1 and 63GJ2 fit a 2 in. ferrule. All Series 63 probe rods are 3 ft (0.91 m) long and are to be cut to length on the job.

Mounting

The 13DJ3 controls may be mounted in any position on a sturdy wall, partition, panel board, bracket, or similar support. While the NEMA enclosure is being mounted, the control base should be stored in a safe place to avoid moisture and mechanical damage.

The enclosure mounting hole dimensions are shown on **page 12** and sheet metal, wood or machine screws, bolts, or similar fasteners may be used. When the housing has been securely fastened, connect the cables or conduits to the housing in the knock out holes provided and replace the control base.

The wiring between the control and the probes should not exceed the lengths listed below.

Table 8: Maximum Recommended Cable Length

Range	Cable Length
1	2000 ft (609.6 m)
2	1000 ft (304.8 m)
3	500 ft (152.4 m)
4	2000 ft (609.6 m)
5	2000 ft (609.6 m)
6	150 ft (45.7 m)

Resistor Selection

When the resistivity of the liquid is known, convert to ohms • cm and select the range resistor that corresponds to the resistivity range in Table 5.

When the resistivity of the liquid is not known, immerse the high level probe tip 1/16 in. (1.5 mm) into the liquid.

For operation with the relay energized with the probe immersed, connect the Range 1 resistor (330 ohms) to Terminals 1 and 2. The relay should energize. If it does not, use successively higher range resistors until the relay energizes. If relay action is sluggish, use the next higher range resistor.

For operation with the relay de-energized with the probe immersed, connect the Range 1 resistor (330 ohms) to Terminals 1 and 3. The relay should de-energize. If it does not, use successively higher range resistors until the relay de-energizes. If relay action is sluggish, use the next higher range resistor.

Note: For resistance sensing applications, use the values of resistance sensing sensitivity listed in Table 6 in place of probe circuit resistivity for selection of the proper range resistor.

Note: Wiring for Ranges 1-2-3 differs from Ranges 4-5-6. Follow wiring instructions in Wiring Diagrams in Figures 6-11.

Wiring

All external wiring should conform to the National Electric Code and applicable local codes. See wiring diagrams for external connections. Wire no smaller than 16 AWG is recommended.

ATTENTION	Do not run probe or reset leads in same conduit with power lines or high current carrying conductors.

Since the 13DJ3 control operates with liquids having high electrical resistance, the insulation resistance of the wiring connecting the control to the probe must be extremely high. It is important, therefore, to use plastic insulated wire to insure that the insulation will not absorb moisture or crack and permit leakage paths to develop. Wires insulated with paper, cotton, asbestos, etc. must not be used. Series 63 sanitary probes are furnished with a molded separable connector and 10 ft (3 m) cable assembly.

Outline and Mounting Dimensions

Unless otherwise indicated, dimensions shown are in inches. Those in parentheses are in millimeters.

NEMA 1 #61-3322-3

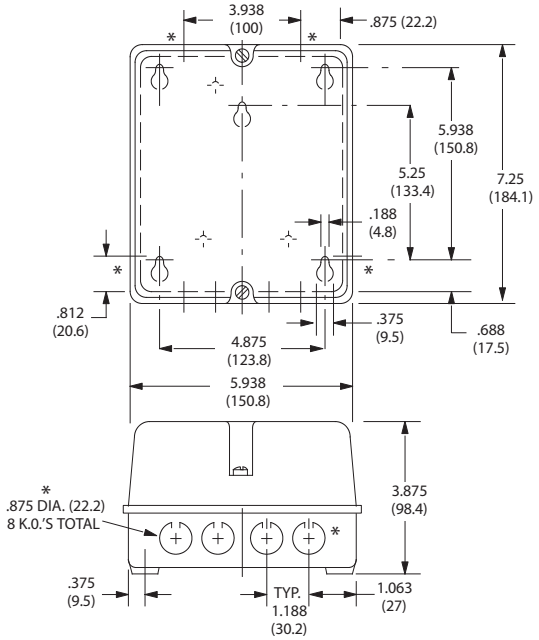

Figure 3

NEMA 3, 4, 5, 12 & 13 #61-4090

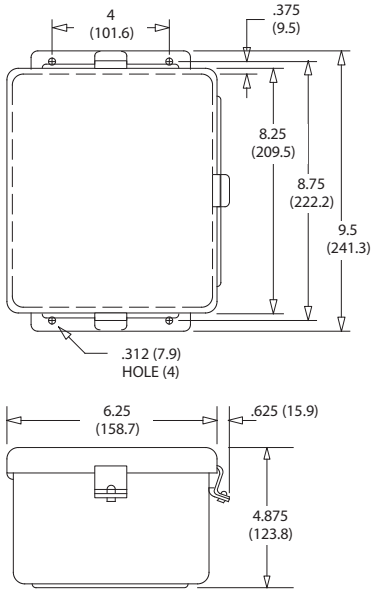

Figure 4

Open Type

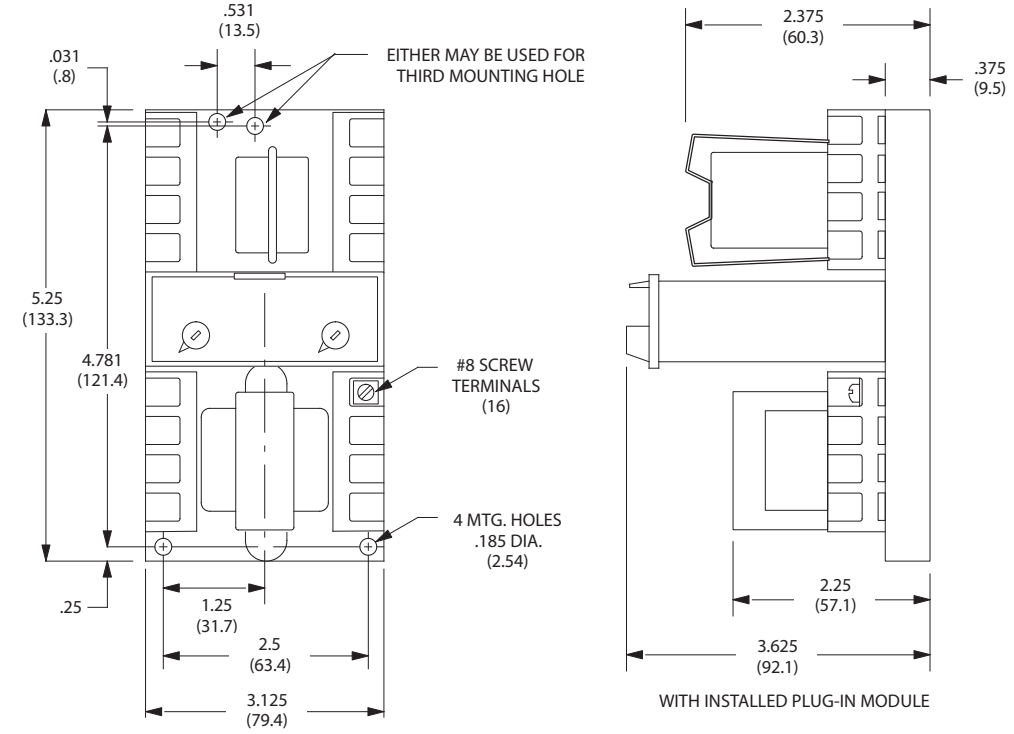

Figure 5

Typical Series 13DJ3 Wiring Diagrams

Low Level Alarm

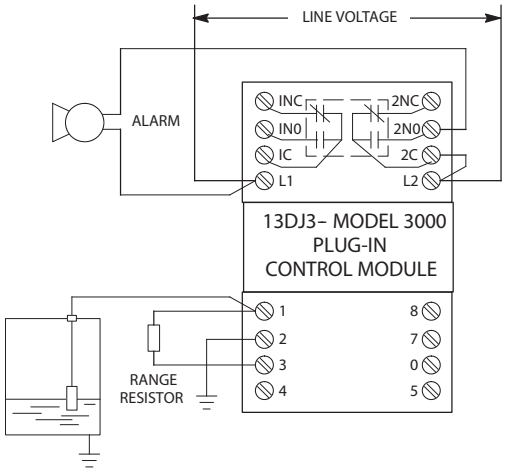

Single probe low level alarm. The relay is de-energized with probe immersed and energized with probe out of liquid. Connections are shown for operation on ranges 1, 2 & 3. For operation on ranges 4, 5 & 6, connect range resistor to terminal “4” instead of terminal “3.”

Tank must be grounded

Figure 6

Low Level Alarm
Self-Latching with Push Button Reset

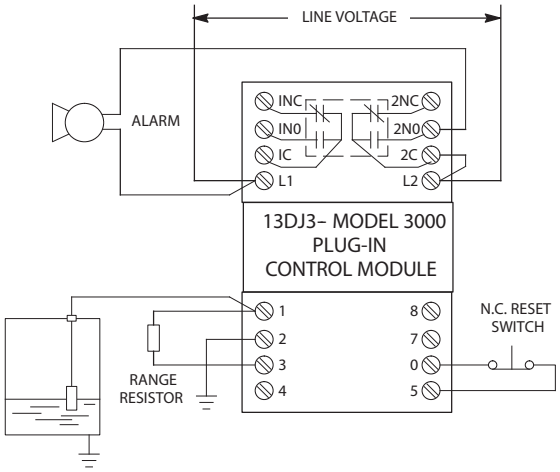

Single probe low level alarm with electronic latching & push button reset. The relay is de-energized with probe immersed and energized with probe out of liquid. Connections are shown for ranges 1, 2 & 3. For operaion on ranges 4, 5 & 6, connect range resistor to terminal “4” instead of terminal “3.”

Tank must be grounded

Figure 7

High Level Alarm

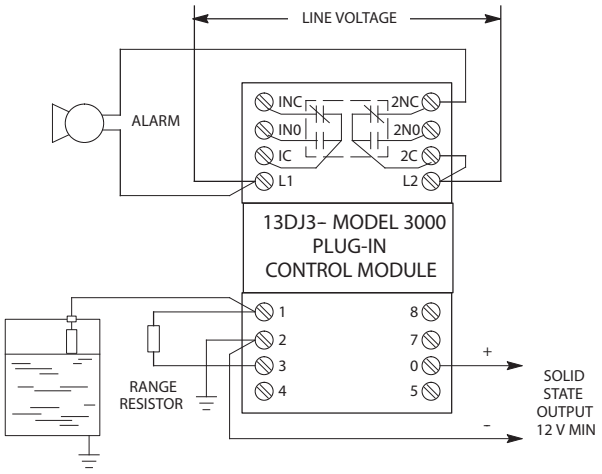

Single probe high level alarm. The relay is de-energized with probe immersed and energized with probe out of liquid. Connections are shown for operation on ranges 1, 2 & 3. For operation on ranges 4, 5 & 6, connect range resistor to terminal "4" instead of terminal "3."

Tank must be grounded

Figure 8

High Level Alarm
Self-Latching with Push Button Reset

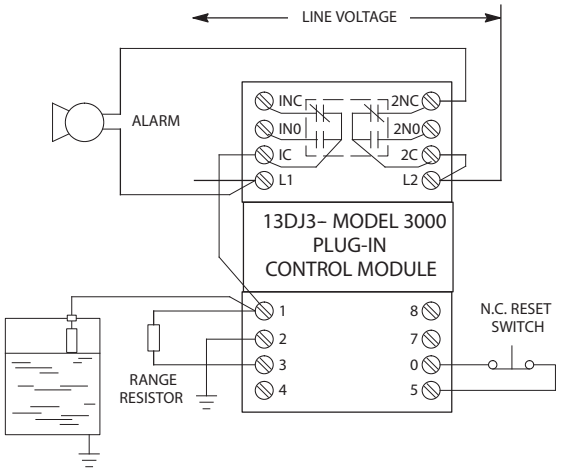

Single probe high level alarm with electronic latching & push and energized with probe out of liquid. Connections are shown for ranges 1, 2 & 3. For operation on ranges 4, 5 & 6 connect range resistor to terminal "4" instead of terminal "3."

Tank must be grounded

Figure 9

Pump Up Constant Level Control

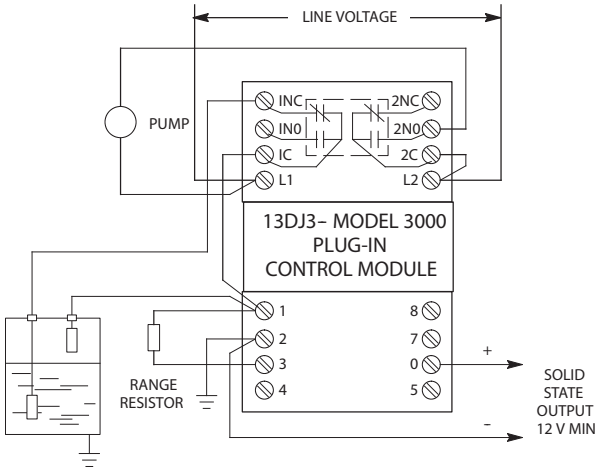

A double probe installation, used for pump-up constant level control. The relay is de-energized when the upper probe is immersed and does not energize until the liquid drops below the lower proble. Connections are shown for ranges 1, 2 & 3. For operation on ranges 4, 5 & 6 connect range resistor to terminal "4" instead of terminal "3."

Tank must be grounded

Figure 10

Pump Down Constant Level Control

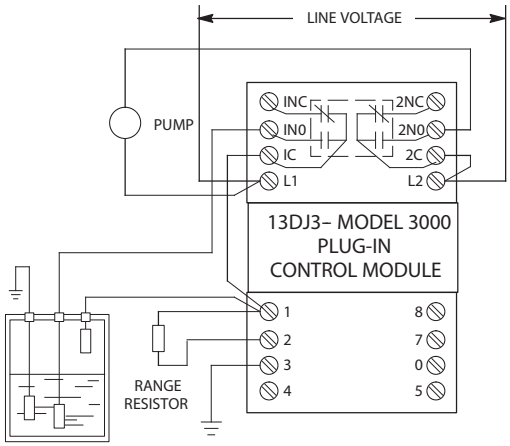

A double probe installation, used for pump-down constant level control. The relay is energized when the upper probe is immersed and de-energized when the liquid drops below the lower proble. Connections are shown for ranges 1, 2 & 3. For operation on ranges 4, 5 & 6, connect ground to terminal "4" instead of terminal "3."

For insulated tanks, a grounded third probe must must be added as shown. If an additional wire is run between the control ground and the third probe, it should be grounded at the control.

Figure 11

61 Series Probe Assemblies

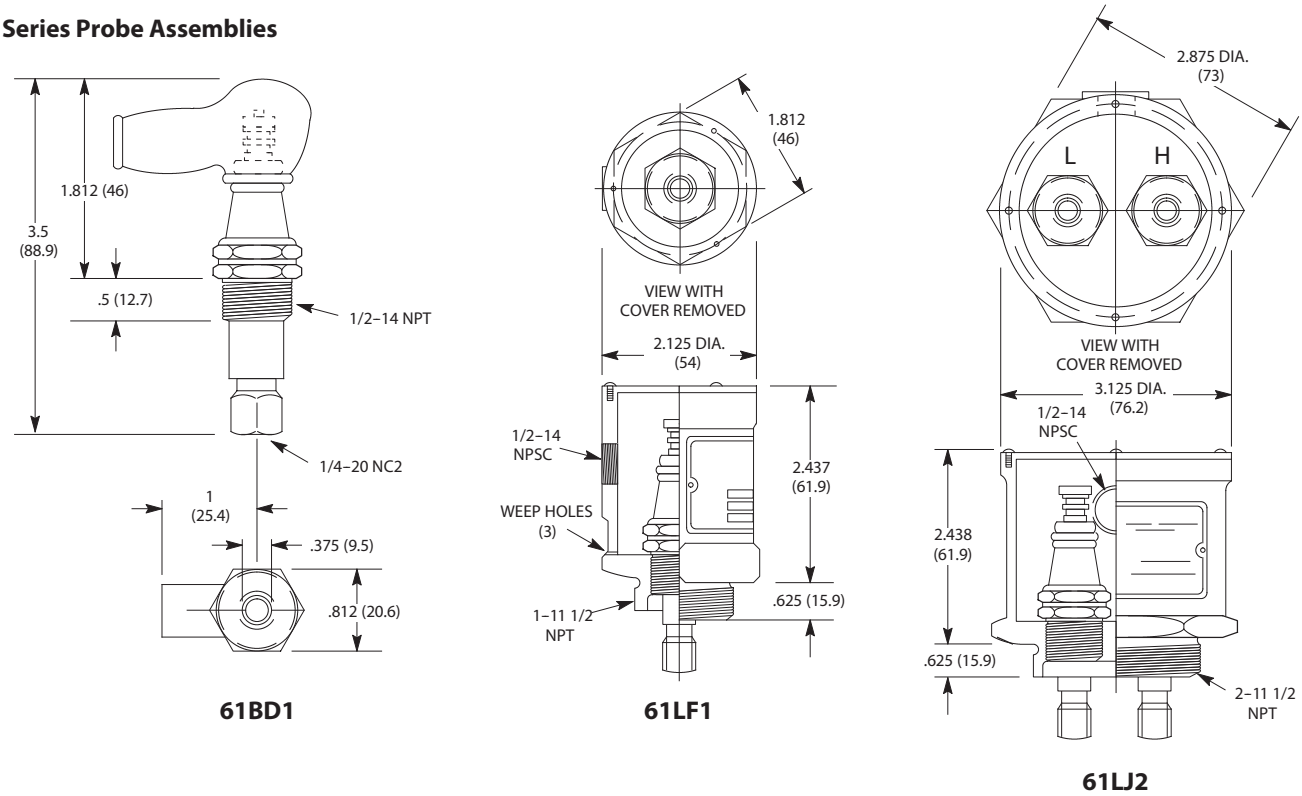

Figure 12

Pump Down Constant Level Control

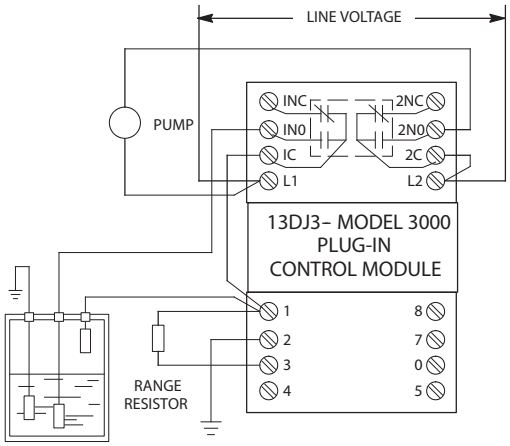

A double probe installation, used for pump-down constant level control. The relay is energized when the upper probe is immersed and de-energized when the liquid drops below the lower probe. Connections are shown for ranges 1, 2 & 3. For operation on ranges 4, 5 & 6, connect range resistor to terminal "4" instead of terminal "3."

For insulated tanks, a grounded third probe must be added as shown. If an additional wire is run between the control ground and the third probe, it should be grounded at the control.

Figure 11A

63 Series Probe Assemblies

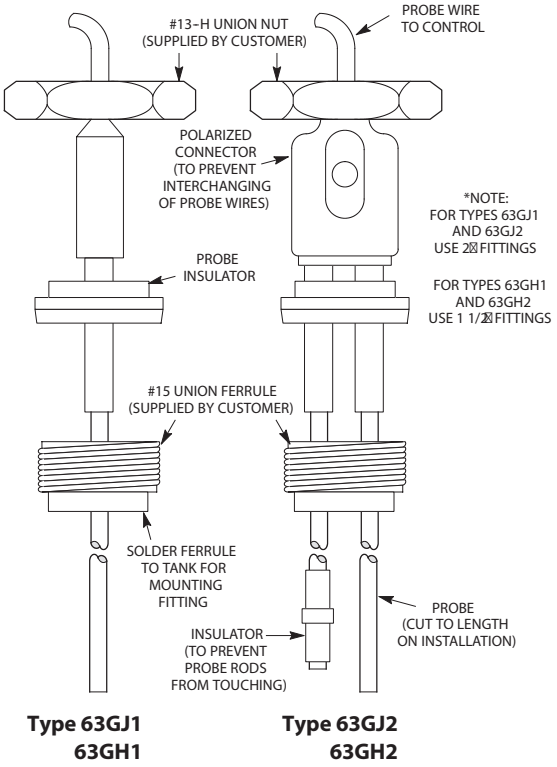

Figure 13

64 Series Probe Assemblies

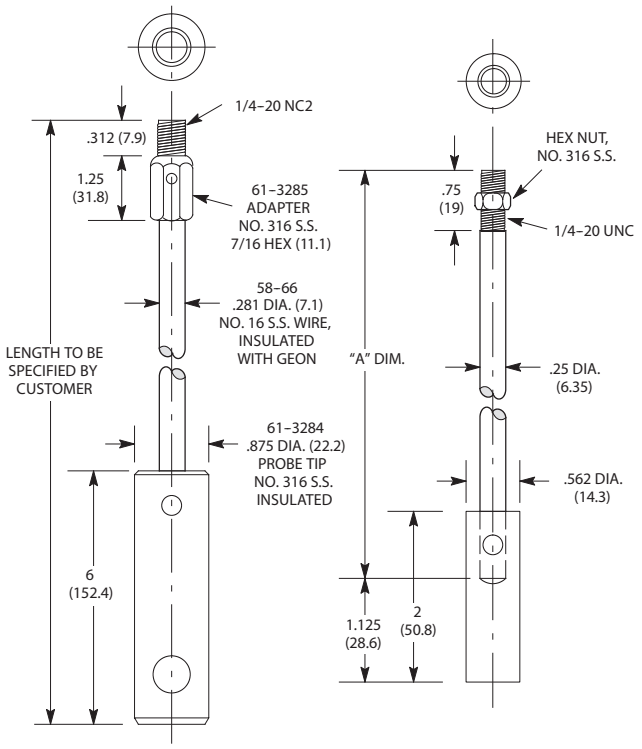

64CR1

Figure 14

Allen-Bradley • Rockwell Software
Rockwell Automation

www.rockwellautomation.com

Power, Control and Information Solutions Headquarters

Americas: Rockwell Automation, 1201 South Second Street, Milwaukee, WI 53204 USA, Tel: (1) 414.382.2000, Fax: (1) 414.382.4444
Europe/Middle East/Africa: Rockwell Automation, Vorstlaan/Boulevard du Souverain 36, 1170 Brussels, Belgium, Tel: (32) 2 663 0600, Fax: (32) 2 663 0640
Asia Pacific: Rockwell Automation, Level 14, Core F, Cyberport 3, 100 Cyberport Road, Hong Kong, Tel: (852) 2887 4788, Fax: (852) 2508 1846

13DJ-2.0 Ver 02
February 2013
Printed in USA