Installation Instructions

Original Instructions

Allen-Bradley by ROCKWELL AUTOMATION

FLEX I/O Isolated Input HART Analog Module

Catalog number 1794-IF8IH

Topic	Page
Summary of Changes	1
Environment and Enclosure	3
Prevent Electrostatic Discharge	3
North American Hazardous Location Approval	3
UK and European Hazardous Location Approval	3
Install the Module	5
Wire the Module	6
Ground the Module	6
Module Wiring	7
Cyclic HART Input Data	10
Status Indicator	11
Specifications	12

This module can only be used with a 1794-ACNR15 adapter with firmware revision 5.1 or later, or a 1794-AENT adapter with firmware revision 4.2 or later. The 1794-AENT adapter currently ships with revision 4.1 firmware. For more information about using this module with a 1794-ACNR15 adapter with firmware revision 5.1 or later, see publication 1794-RN071.

Summary of Changes

This publication contains the following new or updated information. This list includes substantive updates only and is not intended to reflect all changes.

Topic	Page
Updated UK and European Hazardous Location Approval statement	3, 4
Updated trademarks	5
Updated Specifications table	12
Updated Certifications table	14

Rockwell Automation

ATTENTION: Read this document and the documents listed in the Additional Resources section about installation, configuration and operation of this equipment before you install, configure, operate or maintain this product. Users are required to familiarize themselves with installation and wiring instructions in addition to requirements of all applicable codes, laws, and standards.

Activities including installation, adjustments, putting into service, use, assembly, disassembly, and maintenance are required to be carried out by suitably trained personnel in accordance with applicable code of practice. If this equipment is used in a manner not specified by the manufacturer, the protection provided by the equipment may be impaired.

注意：在安装、配置、操作和维护本产品前，请阅读本文档以及 “ 其他资源 ” 部分列出的有关设备安装、配置和操作的相应文档。除了所有适用规范、法律和标准的相关要求之外，用户还必须熟悉安装和接线说明。

安装、调整、投运、使用、组装、拆卸和维护等各项操作必须由经过适当训练的专业人员按照适用的操作规范实施。

如果未按照制造商指定的方式使用该设备，则可能会损害设备提供的保护。

ATENCIÓN: Antes de instalar, configurar, poner en funcionamiento o realizar el mantenimiento de este producto, lea este documento y los documentos listados en la sección Recursos adicionales acerca de la instalación, configuración y operación de este equipo. Los usuarios deben familiarizarse con las instrucciones de instalación y cableado y con los requisitos de todos los códigos, leyes y estándares vigentes.

El personal debidamente capacitado debe realizar las actividades relacionadas a la instalación, ajustes, puesta en servicio, uso, ensamblaje, desensamblaje y mantenimiento de conformidad con el código de práctica aplicable. Si este equipo se usa de una manera no especificada por el fabricante, la protección provista por el equipo puede resultar afectada.

ATENÇÃO: Leia este e os demais documentos sobre instalação, configuração e operação do equipamento que estão na seção Recursos adicionais antes de instalar, configurar, operar ou manter este produto. Os usuários devem se familiarizar com as instruções de instalação e fiação além das especificações para todos os códigos, leis e normas aplicáveis.

É necessário que as atividades, incluindo instalação, ajustes, colocação em serviço, utilização, montagem, desmontagem e manutenção sejam realizadas por pessoal qualificado e especializado, de acordo com o código de prática aplicável.

Caso este equipamento seja utilizado de maneira não estabelecida pelo fabricante, a proteção fornecida pelo equipamento pode ficar prejudicada.

ВНИМАНИЕ: Перед тем как устанавливать, настраивать, эксплуатировать или обслуживать данное оборудование, прочитайте этот документ и документы, перечисленные в разделе «Дополнительные ресурсы». В этих документах изложены сведения об установке, настройке и эксплуатации данного оборудования. Пользователи обязаны ознакомиться с инструкциями по установке и прокладке соединений, а также с требованиями всех применимых норм, законов и стандартов.

Все действия, включая установку, наладку, ввод в эксплуатацию, использование, сборку, разборку и техническое обслуживание, должны выполняться обученным персоналом в соответствии с применимыми нормами и правилами.

Если оборудование используется не предусмотренным производителем образом, защита оборудования может быть нарушена.

注意：本製品を設置、構成、稼動または保守する前に、本書および本機器の設置、設定、操作についての参考資料の該当箇所に記載されている文書に目を通してください。ユーザは、すべての該当する条例、法律、規格の要件に加えて、設置および配線の手順に習熟している必要があります。

設置調整、運転の開始、使用、組立て、解体、保守を含む諸作業は、該当する実施規則に従って訓練を受けた適切な作業員が実行する必要があります。

本機器が製造メーカにより指定されていない方法で使用されている場合、機器により提供されている保護が損なわれる恐れがあります。

ACHTUNG: Lesen Sie dieses Dokument und die im Abschnitt „Weitere Informationen"aufgeführten Dokumente, die Informationen zu Installation, Konfiguration und Bedienung dieses Produkts enthalten, bevor Sie dieses Produkt installieren, konfigurieren, bedienen oder warten. Anwender müssen sich neben den Bestimmungen aller anwendbaren Vorschriften, Gesetze und Normen zusätzlich mit den Installations- und Verdrahtungsanweisungen vertraut machen.

Arbeiten im Rahmen der Installation, Anpassung, Inbetriebnahme, Verwendung, Montage, Demontage oder Instandhaltung dürfen nur durch ausreichend geschulte Mitarbeiter und in Übereinstimmung mit den anwendbaren Ausführungsvorschriften vorgenommen werden.

Wenn das Gerät in einer Weise verwendet wird, die vom Hersteller nicht vorgesehen ist, kann die Schutzfunktion beeinträchtigt sein.

ATTENTION : Lisez ce document et les documents listés dans la section Ressources complémentaires relatifs à l'installation, la configuration et le fonctionnement de cet équipement avant d'installer, configurer, utiliser ou entretenir ce produit. Les utilisateurs doivent se familiariser avec les instructions d'installation et de câblage en plus des exigences relatives aux codes, lois et normes en vigueur.

Les activités relatives à l'installation, le réglage, la mise en service, l'utilisation, l'assemblage, le démontage et l'entretien doivent être réalisées par des personnes formées selon le code de pratique en vigueur.

Si cet équipement est utilisé d'une façon qui n'a pas été définie par le fabricant, la protection fournie par l'équipement peut être compromise.

주의: 본 제품 설치, 설정, 작동 또는 유지 보수하기 전에 본 문서를 포함하여 설치, 설정 및 작동에 관한 참고 자료 섹션의 문서들을 반드시 읽고 숙지하십시오. 사용자는 모든 관련 규정, 법규 및 표준에서 요구하는 사항에 대해 반드시 설치 및 배선 지침을 숙지해야 합니다 .

설치 , 조정 , 가동 , 사용 , 조립 , 분해 , 유지보수 등 모든 작업은 관련 규정에 따라 적절한 교육을 받은 사용자를 통해서만 수행해야 합니다 .

본 장비를 제조사가 명시하지 않은 방법으로 사용하면 장비의 보호 기능이 손상될 수 있습니다 .

ATTENZIONE Prima di installare, configurare ed utilizzare il prodotto, o effettuare interventi di manutenzione su di esso, leggere il presente documento ed i documenti elencati nella sezione "Altre risorse", riguardanti l'installazione, la configurazione ed il funzionamento dell'apparecchiatura. Gli utenti devono leggere e comprendere le istruzioni di installazione e cablaggio, oltre ai requisiti previsti dalle leggi, codici e standard applicabili.

Le attività come installazione, regolazioni, utilizzo, assemblaggio, disassemblaggio e manutenzione devono essere svolte da personale adeguatamente addestrato, nel rispetto delle procedure previste.

Qualora l'apparecchio venga utilizzato con modalità diverse da quanto previsto dal produttore, la sua funzione di protezione potrebbe venire compromessa.

DİKKAT: Bu ürünün kurulumu, yapılandırılması, işletilmesi veya bakımı öncesinde bu dokümanı ve bu ekipmanın kurulumu, yapılandırılması ve işletimi ile ilgili İlave Kaynaklar bölümünde yer listelenmiş dokümanları okuyun. Kullanıcılar yürürlükteki tüm yönetmelikler, yasalar ve standartların gereksinimlerine ek olarak kurulum ve kablolama talimatlarını da öğrenmek zorundadır.

Kurulum, ayarlama, hizmete alma, kullanma, parçaları birleştirme, parçaları sökme ve bakım gibi aktiviteler sadece uygun eğitimleri almış kişiler tarafından yürürlükteki uygulama yönetmeliklerine uygun şekilde yapılabilir.

Bu ekipman üretici tarafından belirlenmiş amacın dışında kullanılırsa, ekipman tarafından sağlanan koruma bozulabilir.

注意事項：在安裝、設定、操作或維護本產品前，請先閱讀此文件以及列於 「其他資源」章節中有關安裝、設定與操作此設備的文件。使用者必須熟悉安裝和配線指示，並符合所有法規、法律和標準要求。

包括安裝、調整、交付使用、使用、組裝、拆卸和維護等動作都必須交由已經過適當訓練的人員進行，以符合適用的實作法規。

如果將設備用於非製造商指定的用途時，可能會造成設備所提供的保護功能受損。

POZOR: Než začnete instalovat, konfigurovat či provozovat tento výrobek nebo provádět jeho údržbu, přečtěte si tento dokument a dokumenty uvedené v části Dodatečné zdroje ohledně instalace, konfigurace a provozu tohoto zařízení. Uživatelé se musejí vedle požadavků všech relevantních vyhlášek, zákonů a norem nutně seznámit také s pokyny pro instalaci a elektrické zapojení.

Činnosti zahrnující instalaci, nastavení, uvedení do provozu, užívání, montáž, demontáž a údržbu musí vykonávat vhodně proškolený personál v souladu s příslušnými prováděcími předpisy.

Pokud se toto zařízení používá způsobem neodpovídajícím specifikaci výrobce, může být narušena ochrana, kterou toto zařízení poskytuje.

UWAGA: Przed instalacją, konfiguracją, użytkowaniem lub konserwacją tego produktu należy przeczytać niniejszy dokument oraz wszystkie dokumenty wymienione w sekcji Dodatkowe źródła omawiające instalację, konfigurację i procedury użytkowania tego urządzenia. Użytkownicy mają obowiązek zapoznać się z instrukcjami dotyczącymi instalacji oraz oprzewodowania, jak również z obowiązującymi kodeksami, prawem i normami.

Działania obejmujące instalację, regulację, przekazanie do użytkowania, użytkowanie, montaż, demontaż oraz konserwację muszą być wykonywane przez odpowiednio przeszkolony personel zgodnie z obowiązującym kodeksem postępowania.

Jeśli urządzenie jest użytkowane w sposób inny niż określony przez producenta, zabezpieczenie zapewniane przez urządzenie może zostać ograniczone.

OBS! Läs detta dokument samt dokumentet, som står listat i avsnittet Övriga resurser, om installation, konfigurering och drift av denna utrustning innan du installerar, konfigurerar eller börjar använda eller utföra underhållsarbete på produkten. Användare måste bekanta sig med instruktioner för installation och kabeldragning, förutom krav enligt gällande koder, lagar och standarder.

Åtgärder som installation, justering, service, användning, montering, demontering och underhållsarbete måste utföras av personal med lämplig utbildning enligt lämpligt bruk.

Om denna utrustning används på ett sätt som inte anges av tillverkaren kan det hända att utrustningens skyddsanordningar försätts ur funktion.

LET OP: Lees dit document en de documenten die genoemd worden in de paragraaf Aanvullende informatie over de installatie, configuratie en bediening van deze apparatuur voordat u dit product installeert, configureert, bediend of onderhoudt. Gebruikers moeten zich vertrouwd maken met de installatie en de bedradingsinstructies, naast de vereisten van alle toepasselijke regels, wetten en normen.

Activiteiten zoals het installeren, afstellen, in gebruik stellen, gebruiken, monteren, demonteren en het uitvoeren van onderhoud mogen uitsluitend worden uitgevoerd door hiervoor opgeleid personeel en in overeenstemming met de geldende praktijkregels.

Indien de apparatuur wordt gebruikt op een wijze die niet is gespecificeerd door de fabrikant, dan bestaat het gevaar dat de beveiliging van de apparatuur niet goed werkt.

Environment and Enclosure

ATTENTION: This equipment is intended for use in a Pollution Degree 2 industrial environment, in overvoltage Category II applications (as defined in EN/IEC 60664-1), at altitudes up to 2000 m (6562 ft) without derating.
This equipment is not intended for use in residential environments and may not provide adequate protection to radio communication services in such environments.
This equipment is supplied as open-type equipment for indoor use. It must be mounted within an enclosure that is suitably designed for those specific environmental conditions that will be present and appropriately designed to prevent personal injury resulting from accessibility to live parts. The enclosure must have suitable flame-retardant properties to prevent or minimize the spread of flame, complying with a flame spread rating of 5VA or be approved for the application if nonmetallic. The interior of the enclosure must be accessible only by the use of a tool. Subsequent sections of this publication may contain more information regarding specific enclosure type ratings that are required to comply with certain product safety certifications.
In addition to this publication, see the following:

- Industrial Automation Wiring and Grounding Guidelines, publication 1770-4.1, for more installation requirements.
- NEMA Standard 250 and EN/IEC 60529, as applicable, for explanations of the degrees of protection provided by enclosures.

Prevent Electrostatic Discharge

ATTENTION: This equipment is sensitive to electrostatic discharge, which can cause internal damage and affect normal operation. Follow these guidelines when you handle this equipment:

- Touch a grounded object to discharge potential static.
- Wear an approved grounding wriststrap.
- Do not touch connectors or pins on component boards.
- Do not touch circuit components inside the equipment.
- Use a static-safe workstation, if available.
- Store the equipment in appropriate static-safe packaging when not in use

North American Hazardous Location Approval

The following information applies when operating this equipment in hazardous locations.	**Informations sur l'utilisation de cet équipement en environnements dangereux.**
Products marked "CL I, DIV 2, GP A, B, C, D" are suitable for use in Class I Division 2 Groups A, B, C, D, Hazardous Locations and nonhazardous locations only. Each product is supplied with markings on the rating nameplate indicating the hazardous location temperature code. When combining products within a system, the most adverse temperature code (lowest "T" number) may be used to help determine the overall temperature code of the system. Combinations of equipment in your system are subject to investigation by the local Authority Having Jurisdiction at the time of installation.	Les produits marqués "CL I, DIV 2, GP A, B, C, D" ne conviennent qu'à une utilisation en environnements de Classe I Division 2 Groupes A, B, C, D dangereux et non dangereux. Chaque produit est livré avec des marquages sur sa plaque d'identification qui indiquent le code de température pour les environnements dangereux. Lorsque plusieurs produits sont combinés dans un système, le code de température le plus défavorable (code de température le plus faible) peut être utilisé pour déterminer le code de température global du système. Les combinaisons d'équipements dans le système sont sujettes à inspection par les autorités locales qualifiées au moment de l'installation.
WARNING: **Explosion Hazard –** • Do not disconnect equipment unless power has been removed or the area is known to be nonhazardous. • Do not disconnect connections to this equipment unless power has been removed or the area is known to be nonhazardous. Secure any external connections that mate to this equipment by using screws, sliding latches, threaded connectors, or other means provided with this product. • Substitution of components may impair suitability for Class I, Division 2. • If this product contains batteries, they must only be changed in an area known to be nonhazardous.	**AVERTISSEMENT:** **Risque d'Explosion –** • Couper le courant ou s'assurer que l'environnement est classé non dangereux avant de débrancher l'équipement. • Couper le courant ou s'assurer que l'environnement est classé non dangereux avant de débrancher les connecteurs. Fixer tous les connecteurs externes reliés à cet équipement à l'aide de vis, loquets coulissants, connecteurs filetés ou autres moyens fournis avec ce produit. • La substitution de composants peut rendre cet équipement inadapté à une utilisation en environnement de Classe I, Division 2. • S'assurer que l'environnement est classé non dangereux avant de changer les piles.

UK and European Hazardous Location Approval

The following applies to products marked Ⓔx II 3 G:

- Are Equipment Group II, Equipment Category 3, and comply with the Essential Health and Safety Requirements relating to the design and construction of such equipment given in Schedule 1 of UKEX Regulation 2016 No. 1107 and Annex II of EU Directive 2014/34/EU. See the UKEx and EU Declaration of Conformity at rok.auto/certifications.
- The type of protection is Ex ec IIC T4 Gc according to EN IEC 60079-0:2018, EXPLOSIVE ATMOSPHERES - PART 0: EQUIPMENT - GENERAL REQUIREMENTS & EN IEC 60079-7:2015+A1:2018, Explosive atmospheres - Equipment protection by increased safety "e".
- Comply to Standards EN IEC 60079-0:2018, EXPLOSIVE ATMOSPHERES - PART 0: EQUIPMENT - GENERAL REQUIREMENTS & EN IEC 60079-7:2015+A1:2018 Explosive atmospheres - Equipment protection by increased safety "e", reference certificate number UL 20 ATEX 2402X & UL22UKEX2488X.
- Are intended for use in areas in which explosive atmospheres caused by gases, vapors, mists, or air are unlikely to occur, or are likely to occur only infrequently and for short periods. Such locations correspond to Zone 2 classification according to UKEX regulation 2016 No. 1107 and ATEX directive 2014/34/EU.

ATTENTION: This equipment is not resistant to sunlight or other sources of UV radiation.

WARNING:
- This equipment shall be mounted in an UKEX/ATEX Zone 2 certified enclosure with a minimum ingress protection rating of at least IP54 (in accordance with EN/IEC 60079-0) and used in an environment of not more than Pollution Degree 2 (as defined in EN/IEC 60664-1) when applied in Zone 2 environments.
- This equipment shall be used within its specified ratings defined by Rockwell Automation.
- Transient protection shall be provided that is set at a level not exceeding 140% of the peak rated voltage value at the supply terminals to the equipment.
- This equipment must be used only with UKEX/ATEX certified backplanes.
- Secure any external connections that mate to this equipment by using screws, sliding latches, threaded connectors, or other means provided with this product.
- Do not disconnect equipment unless power has been removed or the area is known to be nonhazardous.
- Earthing is accomplished through mounting of modules on rail.

ATTENTION: This product is grounded through the DIN rail to chassis ground. Use zinc plated chromate-passivated steel DIN rail to assure proper grounding. The use of other DIN rail materials (for example, aluminum or plastic) that can corrode, oxidize, or are poor conductors, can result in improper or intermittent grounding. Secure DIN rail to mounting surface approximately every 200 mm (7.8 in.) and use end-anchors appropriately.
Be sure to ground the DIN rail properly. See the Industrial Automation Wiring and Grounding Guidelines, Rockwell Automation publication 1770-4.1, for more information.

ATTENTION: To reduce susceptibility to noise, power analog modules and digital modules from separate power supplies.

ATTENTION: Do not exceed a length of 3 m (9.8 ft) for DC power cabling.

WARNING: If you insert or remove the module while backplane power is on, an electrical arc can occur. This could cause an explosion in hazardous location installations. Be sure that power is removed or the area is nonhazardous before proceeding.

WARNING: If you connect or disconnect wiring while the field-side power is on, an electrical arc can occur. This could cause an explosion in hazardous location installations. Be sure that power is removed or the area is nonhazardous before proceeding.

Install the Module

Read this for information about how to install the FLEX™ I/O isolated input HART analog module, which mounts on a 1794-TB3 or 1794-TB3S terminal base. This product can be used with FLEX I/O ControlNet® and EtherNet/IP™ adapters, using Studio 5000[(a)] Logix Designer® application version 20 or later.

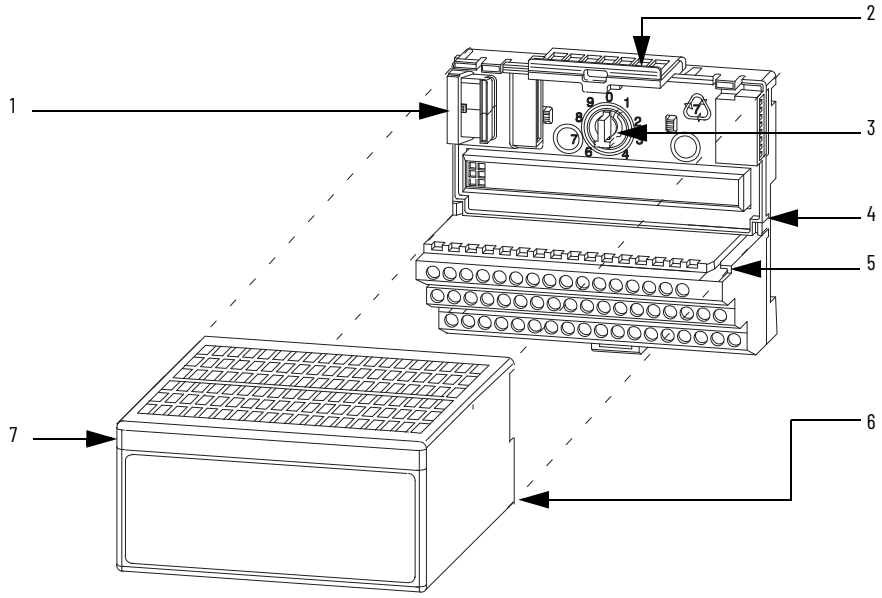

	Description		Description
1	Flexbus connector	5	Groove
2	Latching mechanism	6	Alignment bar
3	Keyswitch	7	Module
4	Terminal base		

ATTENTION: During mounting of all devices, be sure that all debris (metal chips, wire strands, and so on) is kept from falling into the module. Debris that falls into the module could cause damage on power-up.

To install the module on a 1794 terminal base, see the figure and complete the following:

1. Rotate the keyswitch (3) on the terminal base (4) clockwise to position 3 as required for this type of module.
2. Verify the Flexbus connector (1) is pushed all the way to the left to connect with the neighboring terminal base/adapter.

IMPORTANT You cannot install the module unless the connector is fully extended.

3. Make sure the pins on the bottom of the module are straight so they will align properly with the connector in the terminal base.

WARNING: If you remove or insert the module while the backplane power is on, an electrical arc can occur. This could cause an explosion in hazardous location installations. Be sure that power is removed or the area is nonhazardous before proceeding.

4. Position the module (7) with its alignment bar (6) aligned with the groove (5) on the terminal base.
5. Press firmly and evenly to seat the module in the terminal base unit. The module is seated when the latching mechanism (2) is locked into the module.

(a) The Studio 5000 Logix Designer application is the rebranding of RSLogix 5000® software and will continue to be the product to program Logix 5000® controllers for discrete, process, batch, motion, safety, and drive-based solutions.

Wire the Module

WARNING: If you connect or disconnect wiring while the field-side power is on, an electrical arc can occur. This could cause an explosion in hazardous location installations. Be sure that power is removed or the area is nonhazardous before proceeding.

To connect wiring for 1794-TB3 and 1794-TB3S bases, see the tables and figure and complete the following:

1. Connect individual input wiring to numbered terminals on the 0...15 row A, as indicated in the table, using Belden 8761 cable for signal wiring.

   ATTENTION: Connect only one current signal per channel.

2. Connect each channel signal return to the associated terminal on row A.
3. Connect the +V DC power lead to terminal 34 on the 34...51 row C, and the -V common/return to terminal 16 on the 16...33 row B.

   ATTENTION: To reduce susceptibility to noise, power analog modules and digital modules from separate power supplies. Do not exceed a length of 3 m (9.8 ft) for DC power cabling.

4. If daisy chaining power to the next terminal base, connect a jumper from terminal 51 (+V DC) on this base unit to terminal 34 on the next base unit.
5. If continuing DC common to the next base unit, connect a jumper from terminal 33 (common) on this base unit to terminal 16 on the next base unit.
6. For both 1794-TB3 and 1794-TB3S bases, connect wiring shields to functional earth ground as near as possible to the module.

Ground the Module

All I/O wiring must use shielded wire. Shields must be terminated external to the module, such as busbars and shield-terminating feed-through.

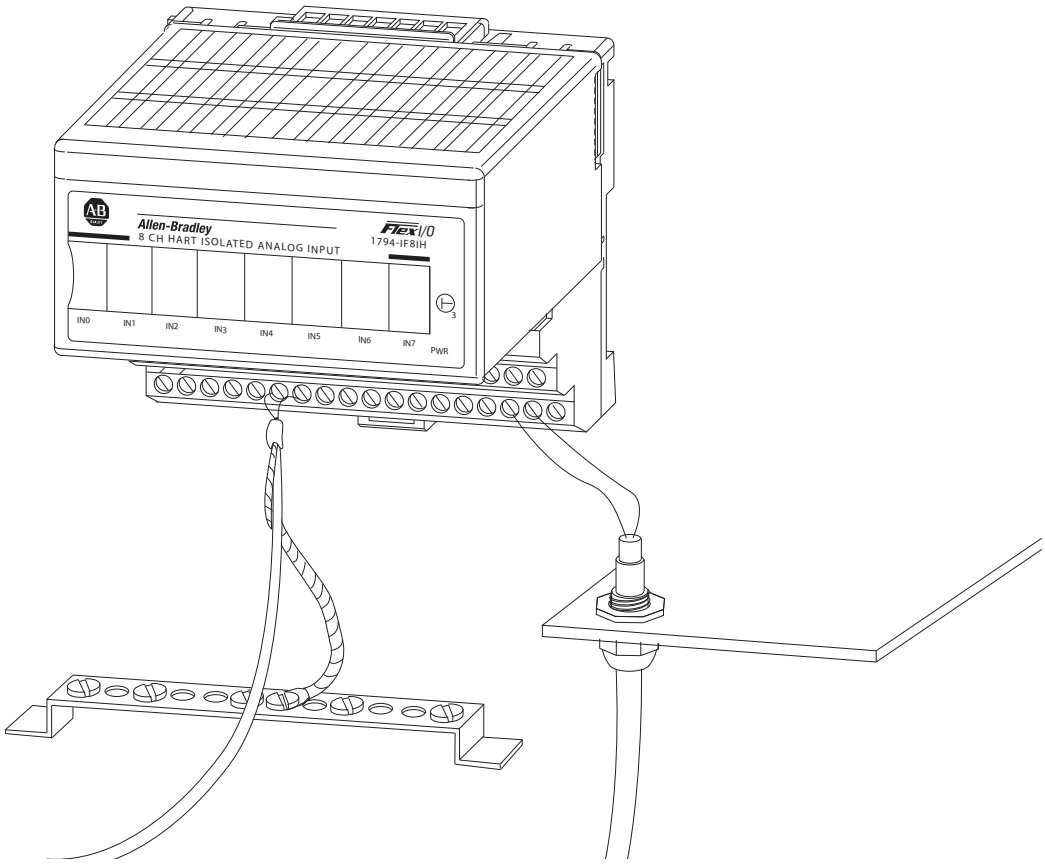

Module Wiring

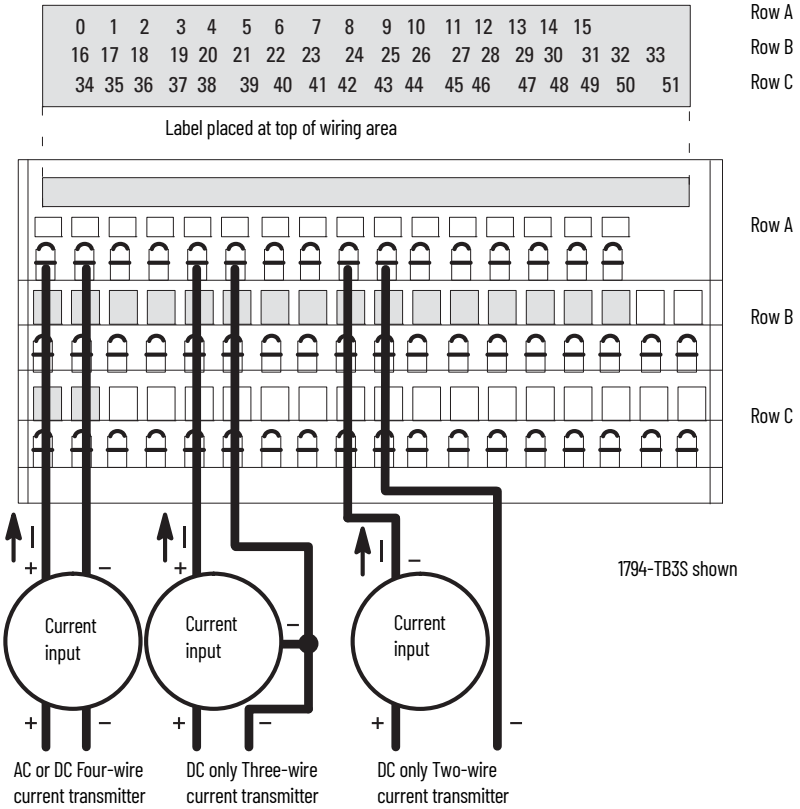

Table 1 - Wire Connections

Channel	Signal Type	Label Markings	Catalog Numbers 1794-TB3 or 1794-TB3S Terminal
0	Current	I0	A-0
	Current	I0 Ret	A-1
1	Current	I1	A-2
	Current	I1 Ret	A-3
2	Current	I2	A-4
	Current	I2 Ret	A-5
3	Current	I3	A-6
	Current	I3 Ret	A-7
4	Current	I4	A-8
	Current	I4 Ret	A-9
5	Current	I5	A-10
	Current	I5 Ret	A-11
6	Current	I6	A-12
	Current	I6 Ret	A-13
7	Current	I7	A-14
	Current	I7 Ret	A-15
-V DC common	For catalog numbers 1794-TB3 and 1794-TB3S, terminals B-16...33 are internally connected in the terminal base unit.		
+V DC power	For catalog numbers 1794-TB3 and 1794-TB3S, terminals C-34...51 are internally connected in the terminal base unit.		

Table 2 - Input Map

Word	Bit															
	15	14	13	12	11	10	9	8	7	6	5	4	3	2	1	0
0	Channel 0 Input Data															
1	Channel 1 Input Data															
2	Channel 2 Input Data															
3	Channel 3 Input Data															
4	Channel 4 Input Data															
5	Channel 5 Input Data															
6	Channel 6 Input Data															
7	Channel 7 Input Data															
8	H7	H6	H5	H4	H3	H2	H1	H0	L7	L6	L5	L4	L3	L2	L1	L0
9	R7	R6	R5	R4	R3	R2	R1	R0	P7	P6	P5	P4	P3	P2	P1	P0
10	Reserved								Diagnostic Status							
11	C7	C6	C5	C4	C3	C2	C1	C0	F7	F6	F5	F4	F3	F2	F1	F0
12	X7	X6	X5	X4	X3	X2	X1	X0	Reserved							
Hn =Channel n High Alarm Ln =Channel n Low Alarm Pn =Channel n Out of Range Alarm Rn =Channel n Second (Remote) Alarm Fn =Channel n HART Failure Cn =Channel n HART Current Fault Xn =Channel n HART Transmitter Present											0 = False; 1 = True 0 = False; 1 = True 0 = False; 1 = True 0 = False; 1 = True 0 = False; 1 = True 0 = False; 1 = True 0 = False; 1 = True					
Note: Reserved data may not be shown in certain controller software																

Table 3 - Configuration Map

Word	Bit															
	15	14	13	12	11	10	9	8	7	6	5	4	3	2	1	0
0	R	R	F7	F6	F5	F4	BOB(1)		R	R	F3	F2	F1	F0	BOA(1)	
1	DH7	DH6	DH5	DH4	DH3	DH2	DH1	DH0	Reserved							
2	CH 3 Format				CH 2 Format				CH 1 Format				CH 0 Format			
3	CH 7 Format				CH 6 Format				CH 5 Format				CH 4 Format			
4	CH1 HART Current Ratio					FLTR1			CH0 HART Current Ratio					FLTR0		
5	CH3 HART Current Ratio					FLTR3			CH2 HART Current Ratio					FLTR2		
6	CH5 HART Current Ratio					FLTR5			CH4 HART Current Ratio					FLTR4		
7	CH7 HART Current Ratio					FLTR7			CH6 HART Current Ratio					FLTR6		
8	Reserved															
9	CH0 High Alarm Threshold															
10	CH0 Low Alarm Threshold															
11	CH0 Remote High High Alarm Limit															
12	CH0 Remote Low Low Alarm Limit															
13...16	Words 9...12 for channel 1															
17...20	Words 9...12 for channel 2															
21...24	Words 9...12 for channel 3															
25...28	Words 9...12 for channel 4															
29...32	Words 9...12 for channel 5															
33...36	Words 9...12 for channel 6															
37...40	Words 9...12 for channel 7															
41	Reserved								C7	C6	C5	C4	C3	C2	C1	C0
Note: Reserved data may not be shown in certain controller software																

(1) Not shown or used in Studio 5000 Logix Designer.

Table 4 - Configuration Map Descriptions

Bit	Description	Value	
BOA BOB	Byte order group A Byte order group B	Byte order group A and B values must match each other. See Byte Order on page 9.	
FLTRn	Channel n Digital Filter	See Channel Digital Filter on page 9.	
Fn	Fault mode channel n	0 = Local/Remote faults disabled	1 = Enabled
CHn HART Current Ratio	HART current fault ratio limit on channel n	Valid values are 0, or 5...31 percent of full scale. A value of 0 disables this feature. See HART Current Ratio on page 9 for more information.	
DHn	Disable HART communications on channel n	0 = HART communications enabled	1 = HART communications disabled
Cn	HART CMD 3 Disable	0 = HART CMD 3 communications enabled	1 = HART CMD 3 communications disabled
R	Reserved		
CH n Format	See Channel Data Format on page 10.		

Table 5 - Byte Order

Byte Order Group B		Byte Order Group A		
Bit 9	**Bit 8**	**Bit 1**	**Bit 0**	**Description**
0	0	0	0	Little Endian Format (default) — all data entries in true Little Endian format.
1	0	1	0	Word Swap — word swap only values requiring more than one word, for example, 32-bit float values.
0	1	0	1	Byte Swap — byte swap all words in data table.
1	1	1	1	Big Endian Format — all data entries in true Big Endian format.

Table 6 - Channel Digital Filter

		Bits		
		10	**9**	**8**
Digital Filter Frequency	**Decimal Value**	**2**	**1**	**0**
470 Hz	0	0	0	0
62 Hz	1	0	0	1
19.6 Hz	2	0	1	0
16.7 Hz	3	0	1	1
10 Hz	4	1	0	0
4.17 Hz	5	1	0	1
Not applicable	6	1	1	0
Not applicable	7	1	1	1

Table 7 - HART Current Ratio

		Bits				
		15	**14**	**13**	**12**	**11**
HART Current Ratio Limit	**Decimal Value**	**7**	**6**	**5**	**4**	**3**
Disabled	0	0	0	0	0	0
Not applicable	1	0	0	0	0	1
Not applicable	2	0	0	0	1	0
Not applicable	3	0	0	0	1	1
Not applicable	4	0	0	1	0	0
5%	5	0	0	1	0	1
6%	6	0	0	1	1	0
7%	7	0	0	1	1	1
8%	8	0	1	0	0	0
9%	9	0	1	0	0	1
10%	10	0	1	0	1	0

Table 7 - HART Current Ratio (Continued)

HART Current Ratio Limit	Decimal Value	Bits 15	14	13	12	11
		7	6	5	4	3
...	...	...	...	...	...	...
30%	30	1	1	1	1	0
31%	31	1	1	1	1	1

Table 8 - Channel Data Format

Format[1]	Bits 15	14	13	12	Format Name	Signal Range LO	Signal Range HI	User Range LO	User Range HI	Resolution
	11	10	9	8						
	7	6	5	4						
	3	2	1	0						
0	0	0	0	0	0...20 mA in Milliamps	0.00	22.00	0 (0.000 mA)	22000 (22.000 mA)	1.0 µA
1	0	0	0	1	0...20 mA in % Full Scale	0.00	22.00	0 (0%)	11000 (110.00%)	2.0 µA
3	0	0	1	1	0...20 mA in UINT	0.00	20.00	0	65535	0.3052 µA
4[2]	0	1	0	0	4...20 mA in Milliamps	2.00	22.00	2000 (2.000 mA)	22000 (22.000 mA)	1.0 µA
5[2]	0	1	0	1	4...20 mA in % Full Scale	2.00	22.00	-1250 (12.50%)	11250 (112.50%)	1.6 µA
7[2]	0	1	1	1	4...20 mA in UINT	4.00	20.00	0	65535	0.2441 µA

(1) All other formats are invalid.
(2) HART communication supported with these data formats only.

Table 9 - Format Values

Format	Format Name	0.0 mA	2.0 mA	4.0 mA	20.0 mA	22.0 mA
0	0...20 mA in Milliamps	0	2000	4000	20000	22000
1	0...20 mA in % Full Scale	0	1000	2000	10000	11000
3	0...20 mA in UINT	0	6554	13107	65535	65535[1]
4	4...20 mA in Milliamps	2000[1]	2000	4000	20000	22000
5	4...20 mA in % Full Scale	1000[1]	1000	2000	10000	11000
7	4...20 mA in UINT	0[1]	0[1]	0	65535	65535[1]

(1) These values are under, or over the supported user range, and are clamped at the lowest/highest supported values.

Cyclic HART Input Data

The HART input data holds the primary variables for the "live" HART device, and other information gathered during the normal HART scan. Additional "documentary" data is available through the pass through message interface in the device information tables. Pass through messages are defined in detail in the FLEX I/O Isolated Input/Output HART Analog Modules User Manual, publication 1794-UM065.

IMPORTANT The HART Input Data for a channel may be zeroes if HART communication is disabled for that channel. For more information on disabling HART communications, see the Disable HART communications and HART CMD 3 Disable functions in Configuration Map Descriptions on page 9.

Table 10 - HART Input Data

Word	Bit 15	14	13	12	11	10	9	8	7	6	5	4	3	2	1	0
0	Reserved								CH7 (CMD 3 Communication Status)	CH6	CH5	CH4	CH3	CH2	CH1	CH0
1	Reserved															
2	CH0 Field Device Status								CH0 Comm Status							

Table 10 - HART Input Data (Continued)

Word	Bit															
	15	14	13	12	11	10	9	8	7	6	5	4	3	2	1	0
3	Reserved				FVA	TVA	SVA	PVA	CH0 HART Loop Status							
4	CH0 HART Primary Value (IEEE 754-1985 Single-Precision 32-bit floating point)															
5																
6	CH0 HART Secondary Value (IEEE 754-1985 Single-Precision 32-bit floating point)															
7																
8	CH0 HART Tertiary Value (IEEE 754-1985 Single-Precision 32-bit floating point)															
9																
10	CH0 HART Fourth (Quaternary) Value (IEEE 754-1985 Single-Precision 32-bit floating point)															
11																
12	CH0 SV Units Code								CH0 PV Units Code							
13	CH0 FV Units Code								CH0 TV Units Code							
14...25	Words 2...13 for channel 1															
26...37	Words 2...13 for channel 2															
38...49	Words 2...13 for channel 3															
50...61	Words 2...13 for channel 4															
62...73	Words 2...13 for channel 5															
74...85	Words 2...13 for channel 6															
86...97	Words 2...13 for channel 7															

Table 11 - HART Input Data Descriptions

CHn: HART CMD 3 Communication Status	0 = HART CMD 3 Communication Disabled or No Error	1 = HART CMD 3 Communication Error between Adapter and Module
CHn: HART Comm Status (HART CMD 3 Response first status byte)	See publication 1794-UM065	
CHn: HART Field Device Status (HART CMD 3 Response second status byte)	See publication 1794-UM065	
CHn HART Loop Status Bit 0 = HART Enable Bit 1 = Device Connected Bit 2 = Response Error Bit 3 = CMD 48 Update Bit 4 = HART Loop Tolerance Error Bit 5 = HART Update Bit 6 = HART Message Bit 7 = Reserved	0 = Disabled 0 = Not connected 0 = No HART message failure 0 = CMD 48 not updated 0 = No HART current fault 0 = HART device information not updated 0 = No new message	1 = Enabled 1 = Connected 1 = Response ended in error 1 = CMD 48 updated 1 = HART current fault 1 = HART device information updated since last read 1 = HART user message queue has completed a message
PVA — The primary variable for this channel has been acquired. SVA — The secondary variable for this channel has been acquired. TVA — The tertiary variable for this channel has been acquired. FVA — The fourth (quaternary) variable for this channel has been acquired.		

Status Indicator

The OK status indicator is bicolor, red, and green. The indicator flashes green for these reasons:

- The module configuration word is zero (for example, power-up reset condition).
- The 24V DC user power is off.
- The module is in Configuration mode.

The indicator displays red to indicate the module did not pass the initial hardware test. Recycle power in response to this display. After power-up, if the status indicator is not flashing green or solid green, recycle module power to verify a proper reset of the bus interface.

Specifications

Specifications – FLEX I/O Isolated Input HART Analog Module – 1794-IF8IH

Attribute	Value
Number of inputs, isolated	8 single-ended
Recommended terminal base unit	1794-TB3, 1794-TB3S
Resolution, unipolar	16-bits
Resolution, bipolar	15-bits plus sign
Current, unipolar	0.320 µA/cnt
Current, bipolar	0.640 µA/cnt
Data format	Engineering Units[4] Percent of Full Scale RAW/Proportional Count
Conversion type	Sigma Delta
Conversion rate	Refer to Input Update Rate table.
Input current terminal	4...20 mA (user configurable) 0...20 mA (user configurable) 0 mA output until product is configured
Normal mode rejection ratio – current terminal	>70 dB @ 50/60 Hz (4.17 Hz ADC conversion rate) >65 dB @ 50/60 Hz (10.0 Hz ADC conversion rate) >75 dB @ 50 Hz (16.7 Hz ADC conversion rate) >85 dB @ 60 Hz (19.6 Hz ADC conversion rate)
Common mode rejection ratio	>60 dB @ 50 Hz >60 dB @ 60 Hz
Step response to 99% – current terminal	4.17 Hz conversion rate = 480 ms 10.0 Hz conversion rate = 200 ms 16.7 Hz conversion rate = 120 ms 19.6 Hz conversion rate = 101 ms 62 Hz conversion rate = 32 ms 470 Hz conversion rate = 4 ms
Input resistance	249 Ω ± 1%
Absolute accuracy[1]	0.1% full scale @ 25 °C
Accuracy drift with temperature[1]	0.4% full scale for 0...55 °C
Calibration required	Factory calibrated Can be calibrated in field when necessary
Overload max, continuous, one channel at a time	32 mA
Isolation voltage	120V (continuous), Basic Insulation Type Type tested @ 1000V AC for 60 s, between User power to system, channel to system, and channel to channel.
Flexbus current	80 mA @ 5V DC
Power dissipation max	4.8 W @ 31.2V DC
Thermal dissipation max	16.4 BTU/hr @ 31.2V DC
Terminal base screw torque	Determined by installed terminal base
Dimensions, approx (H x W x D) with module installed in base	94 x 94 x 66 mm (3.7 x 3.7 x 2.6 in.)
Indicators (field side)	1 red/green power/status indicator
External DC power supply voltage nom[2]	24V DC
External DC power voltage range	19.2...31.2V DC (includes 5% AC ripple)
External DC power supply current	190 mA @ 24V DC
Ambient temperature	0 °C ≤ T_{amb} ≤ 55 °C (32 °F ≤ T_{amb} ≤ 131 °F)
North American temp code	T4
UKEX/ATEX temp code	T4
Keyswitch position	3

Specifications – FLEX I/O Isolated Input HART Analog Module – 1794-IF8IH (Continued)

Attribute	Value
Enclosure type rating	None (open-style)
Wire size	Determined by installed terminal base
Wire type	Shielded
Wiring category(3)	2 - on signal ports 3 - on power ports
Compatibility	HART 5
Device supported	2, 3, 4 wires

(1) Includes offset, gain, non-linearity, and repeatability error terms.
(2) If 24V DC is removed from the module, impedance across external power input terminals ≥ 10 kΩ.
(3) Use this conductor category information for planning conductor routing as described in Industrial Automation Wiring and Grounding Guidelines, publication 1770-4.1. The phase conductor is 0.34...2.5 mm^2. The ground conductor must be equal to or greater than the phase conductor.
(4) Engineering Units apply to HART data only.

Environmental Specifications

Attribute	Value
Operating temperature	IEC 60068-2-1 (Test Ad, Operating Cold), IEC 60068-2-2 (Test Bd, Operating Dry Heat), IEC 60068-2-14 (Test Nb, Operating Thermal Shock): 0...55 °C (32...131 °F)
Storage temperature	IEC 60068-2-1 (Test Ab, Unpackaged Non-operating Cold), IEC 60068-2-2 (Test Bb, Unpackaged Non-operating Dry Heat), IEC 60068-2-14 (Test Na, Unpackaged Non-operating Thermal Shock): -40...+85 °C (-40...+185 °F)
Relative humidity	IEC 60068-2-30 (Test Db, Unpackaged Damp Heat): 5...95% noncondensing
Vibration	IEC60068-2-6 (Test Fc, Operating): 5 g @ 10...500 Hz
Shock, operating	IEC60068-2-27 (Test Ea, Unpackaged shock): 20 g
Shock, non-operating	IEC60068-2-27 (Test Ea, Unpackaged shock): 25 g
Emissions	IEC 61000-6-4
ESD immunity	IEC 61000-4-2: 6 kV contact discharges 8 kV air discharges
Radiated RF immunity	IEC 61000-4-3: 10V/m with 1 kHz sine-wave 80% AM from 80...2000 MHz 10V/m with 200 Hz 50% Pulse 100% AM @ 900 MHz 10V/m with 200 Hz 50% Pulse 100% AM @ 1890 MHz 3V/m with 1 kHz sine-wave 80% AM from 2000...2700 MHz
EFT/B immunity	IEC 61000-4-4: ±3 kV @ 5 kHz on signal ports
Surge transient immunity	IEC 61000-4-5: ±2 kV line-earth(CM) on shielded ports
Conducted RF immunity	IEC 61000-4-6: 10V rms with 1 kHz sine-wave 80% AM from 150 kHz...80 MHz

Certifications

Certifications (when product is marked)[1]	Value
c-UL-us	UL Listed Industrial Control Equipment, certified for US and Canada. See UL File E65584. UL Listed for Class I, Division 2 Group A,B,C,D Hazardous Locations, certified for U.S. and Canada. See UL File E194810.
CE	UK Statutory Instrument 2016 No. 1091 and European Union 2014/30/EU EMC Directive, compliant with: EN 61326-1; Meas./Control/Lab., Industrial Requirements EN 61000-6-2; Industrial Immunity EN 61000-6-4; Industrial Emissions EN 61131-2; Programmable Controllers (Clause 8, Zone A & B) UK Statutory Instrument 2012 No. 3032 and European Union 2011/65/EU RoHS, compliant with: EN 63000; Technical documentation
Ⓔx II 3 G	UK Statutory Instrument 2016 No. 1107 and European Union 2014/34/EU ATEX Directive, compliant with: EN IEC 60079-7; Potentially Explosive Atmospheres, Protection EN IEC 60079-0; General Requirements II 3 G Ex ec IIC T4 Gc UL 20 ATEX 2402X UL22UKEX2488X
KC	Korean Registration of Broadcasting and Communications Equipment, compliant with: Article 58-2 of Radio Waves Act, Clause 3
EAC	Russian Customs Union TR CU 020/2011 EMC Technical Regulation
Morocco	Arrêté ministériel n° 6404-15 du 29 ramadan 1436 - EMC
RCM	Australian Radiocommunications Act, compliant with: EN 61000-6-4; Industrial Emissions
CCC	CNCA-C23-01 强制性产品认证实施规则 防爆电气 CNCA-C23-01 CCC Implementation Rule Explosion-Proof Electrical Products

(1) See product certification link at rok.auto/certifications for declarations of conformity, certificates, and other certification details.

Notes:

Rockwell Automation Support

Use these resources to access support information.

Technical Support Center	Find help with how-to videos, FAQs, chat, user forums, and product notification updates.	rok.auto/support
Knowledgebase	Access Knowledgebase articles.	rok.auto/knowledgebase
Local Technical Support Phone Numbers	Locate the telephone number for your country.	rok.auto/phonesupport
Literature Library	Find installation instructions, manuals, brochures, and technical data publications.	rok.auto/literature
Product Compatibility and Download Center (PCDC)	Download firmware, associated files (such as AOP, EDS, and DTM), and access product release notes.	rok.auto/pcdc

Documentation Feedback

Your comments help us serve your documentation needs better. If you have any suggestions on how to improve our content, complete the form at rok.auto/docfeedback.

Waste Electrical and Electronic Equipment (WEEE)

At the end of life, this equipment should be collected separately from any unsorted municipal waste.

Rockwell Automation maintains current product environmental compliance information on its website at rok.auto/pec.

Rockwell Otomasyon Ticaret A.Ş. Kar Plaza İş Merkezi E Blok Kat:6 34752 İçerenköy, İstanbul, Tel: +90 (216) 5698400 EEE Yönetmeliğine Uygundur

Connect with us.

rockwellautomation.com — expanding **human possibility**®

AMERICAS: Rockwell Automation, 1201 South Second Street, Milwaukee, WI 53204-2496 USA, Tel: (1) 414.382.2000, Fax: (1) 414.382.4444
EUROPE/MIDDLE EAST/AFRICA: Rockwell Automation NV, Pegasus Park, De Kleetlaan 12a, 1831 Diegem, Belgium, Tel: (32) 2 663 0600, Fax: (32) 2 663 0640
ASIA PACIFIC: Rockwell Automation, Level 14, Core F, Cyberport 3, 100 Cyberport Road, Hong Kong, Tel: (852) 2887 4788, Fax: (852) 2508 1846

Allen-Bradley, expanding human possibility, FactoryTalk, FLEX, Logix 5000, Rockwell Automation, RSLogix 5000, Studio 5000 Logix Designer, and TechConnect are trademarks of Rockwell Automation, Inc.
ControlNet and EtherNet/IP are trademarks of ODVA, Inc.
Trademarks not belonging to Rockwell Automation are property of their respective companies.

Publication 1794-IN115G-EN-P - July 2022 | Supersedes Publication 1794-IN115F-EN-P-February 2021
Copyright © 2022 Rockwell Automation, Inc. All rights reserved.