Technical Data

Original Instructions

Medium Voltage OEM Components Specifications

Bulletin Numbers 1502, 1503C, 1503E, 1503F, 1503S, 1503VC

Topic	Page
Summary of Changes	2
Medium Voltage OEM Products	3
OEM Frame and Components	4
1502 Vacuum Contactors	8
1503C Relay Control Panel	13
1503S Non-load-break Isolation Switches	15
Isolation Switch Handle Module	19
1503VC IntelliVAC Control Module	20
1503E MV SMC-50 OEM Controller Kits	22
Assembled Power Stack Frame	27
Power Stack	29
SMC-50 Control Module	37
Interface Board	39
Voltage Sensing Board	40
Relay Control Panel	41
Fiber-optic Cables	42
Gate Driver Test Power Supply	42
Full Load Currents of 3 Phase, 60 Hertz, Medium Voltage AC Induction Motors	43
Additional Resources	45

Summary of Changes

This publication contains the following new or updated information. This list includes substantive updates only and is not intended to reflect all changes.

Topic	Page
Removed Bulletin 857 and 865 relays	Throughout
Updated 450 A electromechanical contactor catalog numbers	8
Updated Bulletin 1503C relay control panel graphic and the terminal block PN	13, 14
Updated Bulletin 1503C relay control panel dimensions	14
Updated control power selector assembly graphic	21
Added section on SMC-50 control I/O, ground fault protection, and HIM	22
Updated relay control panel graphic and dimensions	41
Updated relay control panel terminal block specifications	41
Updated SMC-50 publications in Additional Resources	45

Medium Voltage OEM Products

OEM frames and components leverage the existing family of motor controllers built by Rockwell Automation. They also incorporate some of the most fundamental, high-volume components available in our OEM product line for Original Equipment Manufacturers and electrical equipment companies.

Bulletin 1502 vacuum contactors are a comprehensive line of vacuum contactors used as isolating contactors or as bypass contactors. Light weight and maintainability are but two of the features of this fixed-mounted design.

Bulletin 1503F OEM components are a series of medium voltage frame-mounted components designed to mount into new or existing structures or enclosures. These assemblies can also be used to retrofit existing motor controllers. These products are available as a complete OEM frame or sold individually as components.

Bulletin 1503E MV SMC™-50 OEM kits are a series of solid-state reduced voltage components designed to mount into new or existing structures or enclosures. These assemblies can also be used to retrofit existing motor controllers. These products are available as an OEM frame and components.

Rockwell Automation offers standard motor controllers, solid-state reduced voltage starters, and variable speed drives with standard, yet flexible, product configurations for all product lines.

Rockwell Automation offers several OEM programs (custom engineered options and configurations with a standard quick-ship delivery). Contact your local Rockwell Automation office for more information on these programs and other OEM products.

See Additional Resources on page 45 for information regarding SMC-50 publications.

OEM Frame and Components

The Bulletin 1503F 400 A and 600 A OEM controller is an open-frame-style structure that consists of a bolted construction frame housing the vacuum contactor, non-load-break isolation switch, and the isolation switch handle module. An open control panel is included which connects to the vacuum contactor to provide the necessary control functions for operating the controller. The controllers are available for voltages ranging from 2400...7200V.

Other standard components include 2 N.O./2 N.C. auxiliary contacts on the isolator switch, a power cell door, and a 10 ft (3.05 m) wire harness for 120 or 230V AC control power (for IntelliVAC™ controlled contactors only).

The 1503F OEM controller requires additional components in order to fully construct a complete motor starter such as current transformers, power fusing, a control power transformer, overload protection, appropriate control circuitry for the application, and a suitable enclosure.

Ferraz-Shawmut medium voltage power fuses are recommended for the Bulletin 1503F. These motor fuses have been tested and meet the co-ordination requirements for the Bulletin 1502 vacuum contactor.

When choosing a frame catalog number, review the specifications for these OEM components.

Table 1 - Standard OEM Components Specifications

Component	Page
1502 Vacuum Contactors	8
Mechanical Latch Kit	11
1503C Relay Control Panel	13
1503S Non-load-break Isolation Switches	15
Control Power Selector Assembly	21

Product Selection

Table 2 - Bulletin 1503F OEM Frame Options and Catalog Numbers

Current Rating [1]	Voltage (kV)	Contactor Type	Power Fuse Clip	Control Method[2] [3]	Control Voltage	Cat. No.
400 A	2.3...5.0	Electrically Held	Clip-on	Electromechanical	110...120V AC	1503F-E4GCD
					220...230V AC	1503F-E4GCE
				IntelliVAC	110...240V AC *or* 110...250V DC	1503F-E4GCU
			Bolt-on	Electromechanical	110...120V AC	1503F-E4GBD
					220...230V AC	1503F-E4GBE
				IntelliVAC	110...240 VAC *or* 110...250 VDC	1503F-E4GBU
		Mechanical Latch	Clip-on	Electromechanical	110 to 120 VAC	1503F-M4GCD
				IntelliVAC	110...240V AC *or* 110...250V DC	1503F-M4GCU
			Bolt-on	Electromechanical	110...120V AC	1503F-M4GBD
				IntelliVAC	110...240V AC *or* 110...250V DC	1503F-M4GBU
	5.1...6.9	Electrically Held	Clip-on	Electromechanical	110...120V AC	1503F-E4KCD
					220...230V AC	1503F-E4KCE
				IntelliVAC	110...240V AC *or* 110...250V DC	1503F-E4KCU
			Bolt-on	Electromechanical	110...120V AC	1503F-E4KBD
					220...230V AC	1503F-E4KBE
				IntelliVAC	110...240V AC *or* 110...250V DC	1503F-E4KBU
		Mechanical Latch	Clip-on	Electromechanical	110...120V AC	1503F-M4KCD
				IntelliVAC	110...240V AC *or* 110...250V DC	1503F-M4KCU
			Bolt-on	Electromechanical	110...120V AC	1503F-M4KBD
				IntelliVAC	110...240V AC *or* 110...250V DC	1503F-M4KBU
600 A	2.3...5.0	Electrically Held	Bolt-on	Electromechanical	110...120V AC	1503F-E6GBD
				IntelliVAC	110...240V AC *or* 110...250V DC	1503F-E6GBU
		Mechanical Latch	Bolt-on	Electromechanical	110...120V AC	1503F-M6GBD
				IntelliVAC	110...240V AC *or* 110...250V DC	1503F-M6GBU
	5.1...6.9	Electrically Held	Bolt-on	Electromechanical	110...120V AC	1503F-E6KBD
				IntelliVAC	110...240V AC *or* 110...250V DC	1503F-E6KBU
		Mechanical Latch	Bolt-on	Electromechanical	110...120V AC	1503F-M6KBD
				IntelliVAC	110...240V AC *or* 110...250V DC	1503F-M6KBU

(1) See Table 4 on page 9 for use above 1000 m (3300 ft).
(2) Electromechanical Control includes a complete 1503C-*xxx* control panel assembly, for mounting by customer.
(3) All IntelliVAC control options include an IntelliVAC module and suitable 1503-WH*xxx* wire harness. A control power selector assembly, 1503C-CPS*x*, may be ordered separately (if required).

Dimensions

Assembled 400 A Power Cell and Frame

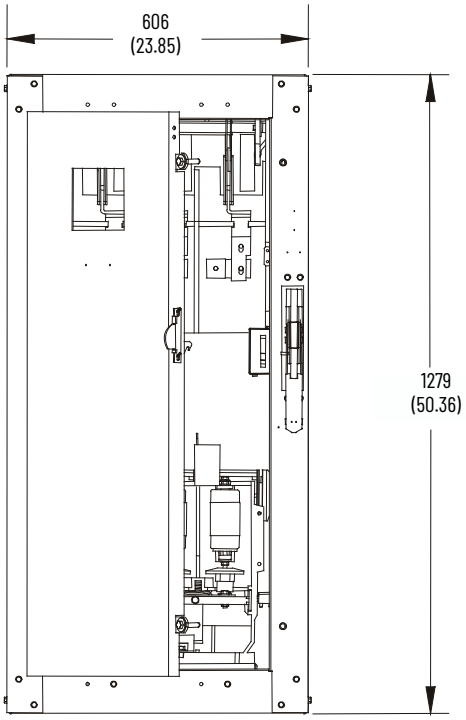

Front View

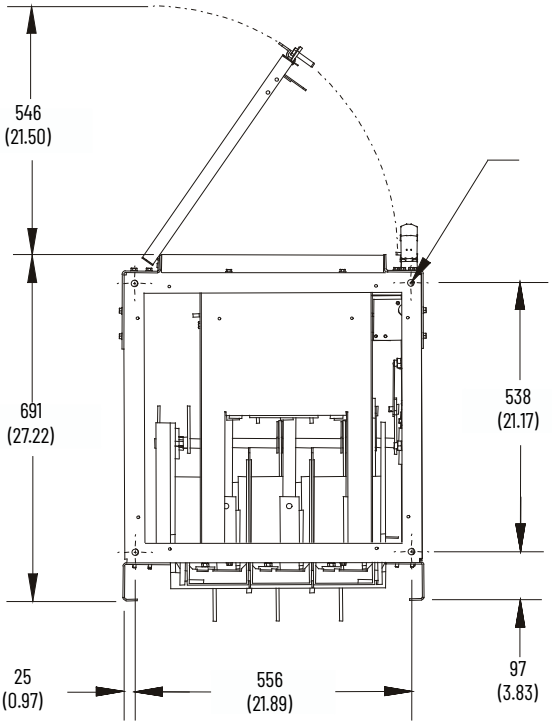

Bottom View

Approximate dimensions in mm (inches).

Assembled 600 A Power Cell and Frame

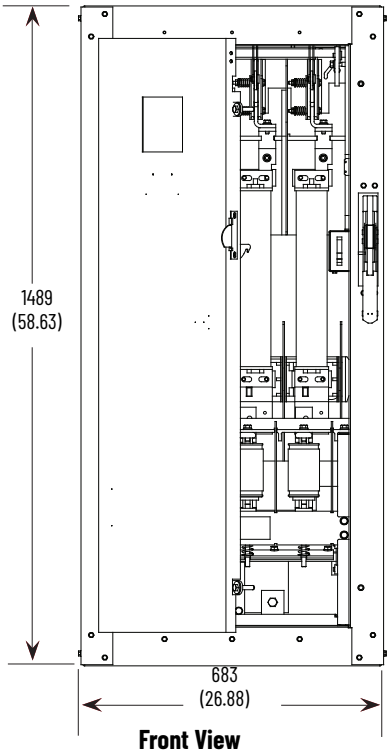

Front View

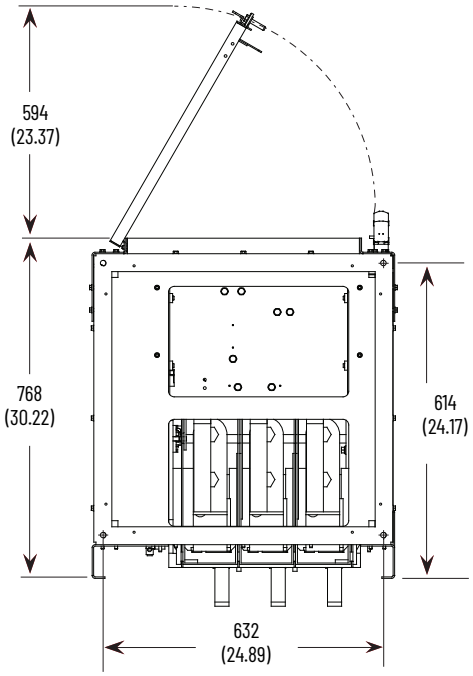

Side View

Approximate dimensions in mm (inches).

Typical Schematic

Typical Schematic • 120V Control Circuit, 450 A Electrically Held Contactor with IntelliVAC Control (including option 1503C-CPSx)

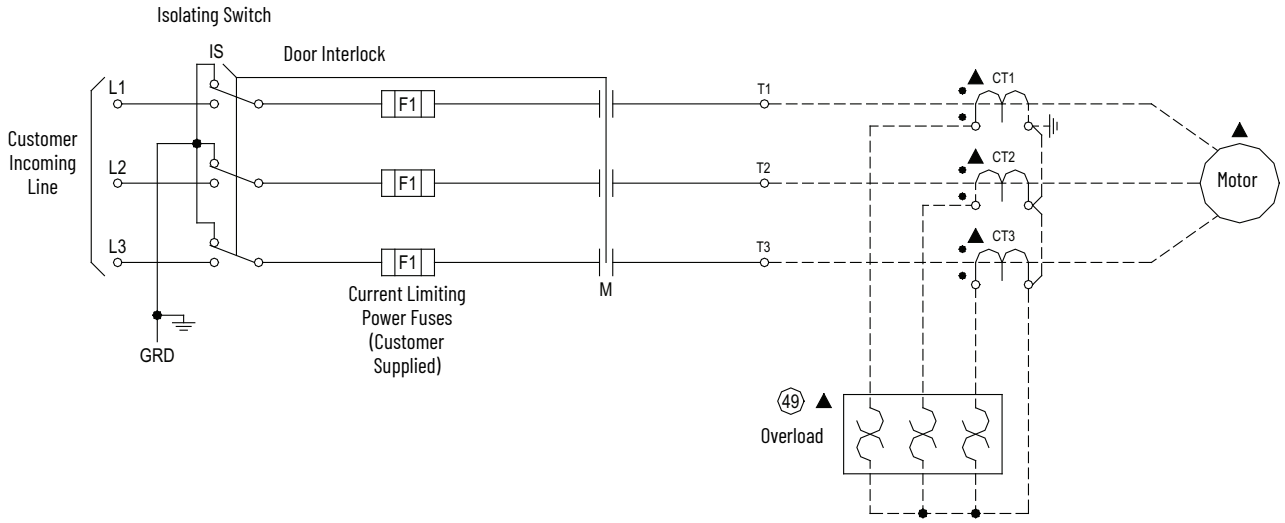

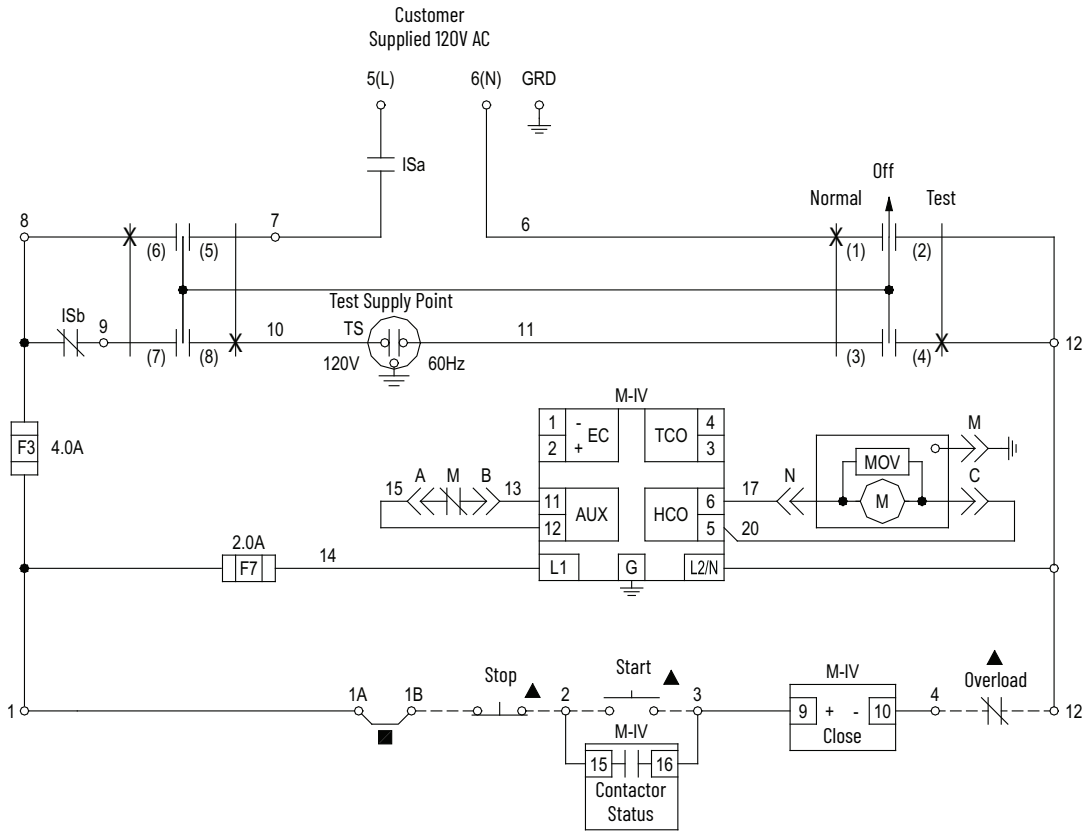

Legend

- Customer wiring
- ■ Remove jumper when connecting remote equipment
- (#) 'IEEE' number for protective device
- ▲ Remote equipment

1502 Vacuum Contactors

Bulletin 1502 vacuum contactors are designed for applications in the 2400...7200V AC range. The contactor uses three interrupters (referred to as vacuum bottles) operated by an electromagnet assembly through a mechanical linkage. They are resistant to most adverse atmospheric conditions and provide long mechanical and electrical life.

The contactors are used in various starter and drive configurations. They are fixed-mounted in the structures and the line and load terminations are made at the rear of the device. In most configurations, the main contactor is mechanically interlocked with the external operating handle and isolation switch.

Bulletin 1502 vacuum contactors are designed for use with the IntelliVAC control modules. Certain contactor models are configured for use with electromechanical (relay) control panels. There are physical differences between contactors that are designed for IntelliVAC control versus those intended to be operated using electromechanical relay controls.

450 A

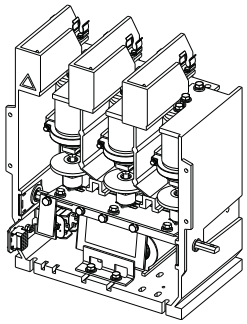

800 A

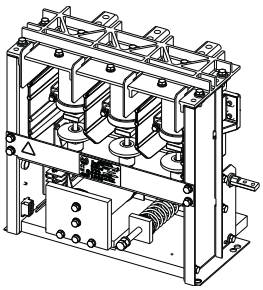

Product Selection

Table 3 - Bulletin 1502 Vacuum Contactors

Contactor Current Rating(1)	Control Circuit	Vacuum Contactor Type	Cat. No.	Wire Harness Cat. No. (2)
450 A(3)(4)	Electromechanical	Fixed-mounted, Electrically-held(5)(6)(8)	1502-V4DBDA-0	1503-WHE4D
		Fixed-mounted, Electrically-held (fast drop-out)(5)(6)(7)(8)	1502-V4DBDD-0	
		Fixed-mounted, Mechanical Latch(6)(8)	1502-V4DBDB-0	1503-WHM4D
	IntelliVAC	Fixed-mounted, Electrically-held(7)(8)(9)	1502-VC4DBDA-0	1503-WHE4V
		Fixed-mounted, Mechanical Latch(8)	1502-VC4DBDB-0	1503-WHM4V
800 A	Electromechanical	Fixed-mounted, Electrically-held(5)(6)(10)	1502-V8DXDA-__	1503-WHE8D
		Fixed-mounted, Electrically-held (fast drop-out)(5)(6)(7)(10)	1502-V8DXDD-__	
		Fixed-mounted, Mechanical Latch(6)(10)	1502-V8DXDB-__	1503-WHM8D
	IntelliVAC	Fixed-mounted, Electrically-held(9)(10)	1502-VC8DXDA-__	1503-WHE8V
		Fixed-mounted, Mechanical Latch(10)	1502-VC8DXDB-__	1503-WHM8V

(1) See Full Load Currents of 3 Phase, 60 Hertz, Medium Voltage AC Induction Motors on page 43.
(2) If a 1503F OEM power cell and frame, a 1503C, or 1503E control panel are ordered, a wire harness is provided.
(3) The contactors listed include integrated fuse clips for 5.0 kV max. control power transformer primary fuses. Change the fifth position of the catalog number from 'B' to 'C' for contactors with 7.2 kV max. fuse clips, e.g. 1502-V4DCDA-0. No extra charge applies.
(4) 450A rating is applicable for class E1 controllers only. For class E2 controllers, 400A rating should be considered for the maximum rating based on power fuse coordination.
(5) The electrically held contactors are also available with 210V DC coils (210V DC coils are not available for mechanical latch contactors and they are not required when using IntelliVAC control). Change the sixth position of the contactor catalog number from 'D' to E' (e.g. 1502-V4DCEA-0). Change the last position of the wire harness catalog number from 'D' to 'E'. No extra charge applies.
(6) See Relay Control Panel on page 41.
(7) For use as bypass contactors with Bulletin 1503E MV SMC-50 controllers.
(8) When IntelliVAC or 450A rating with electromechanical control is used, select altitude code zero (0) which allows the same contactor to be used from -1000...5000 m. The contactor current must be derated per Table 4 on page 9.
(9) 1502-VC electrically-held contactors are provided as fast drop out type, and drop out delays are controlled by the IntelliVAC control module.
(10) Complete the contactor catalog numbers by selecting the altitude rating from Table 4 on page 9, e.g. 1502-V8DXDA-2. This altitude code is valid for 800 A rating electrically held and mechanical latch contactors. Select altitude code 1...5. The contactor current must be derated per Table 4 on page 9.

Altitude Code and Derating

Table 4 - Contactor Deratings

Altitude Rating[1]	Altitude Code	Reduce Max. Continuous Current Rating by :		Reduce B.I.L. Withstand Rating by :
		450 A	800 A	
0...1000 m (0...3300 ft)	1	–	–	–
1001...2000 m (3301...6600 ft)	2	10 A	20 A	6.0 kV
2001...3000 m (6601...9900 ft)	3	20 A	40 A	12.0 kV
3001...4000 m (9901...13,200 ft)	4	30 A	60 A	18.0 kV
4001...5000 m (13,201...16,500 ft)	5	40 A	80 A	24.0 kV

(1) 800A contactors require mechanical spring adjustments for altitude variations. See publication 1502-UM054 for details.

Dimensions

450 A Vacuum Contactor

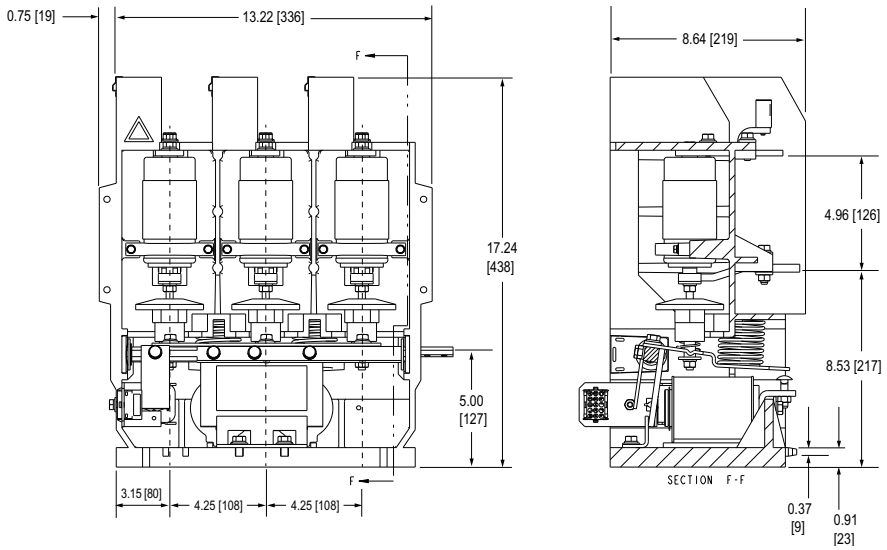

800 A Vacuum Contactor

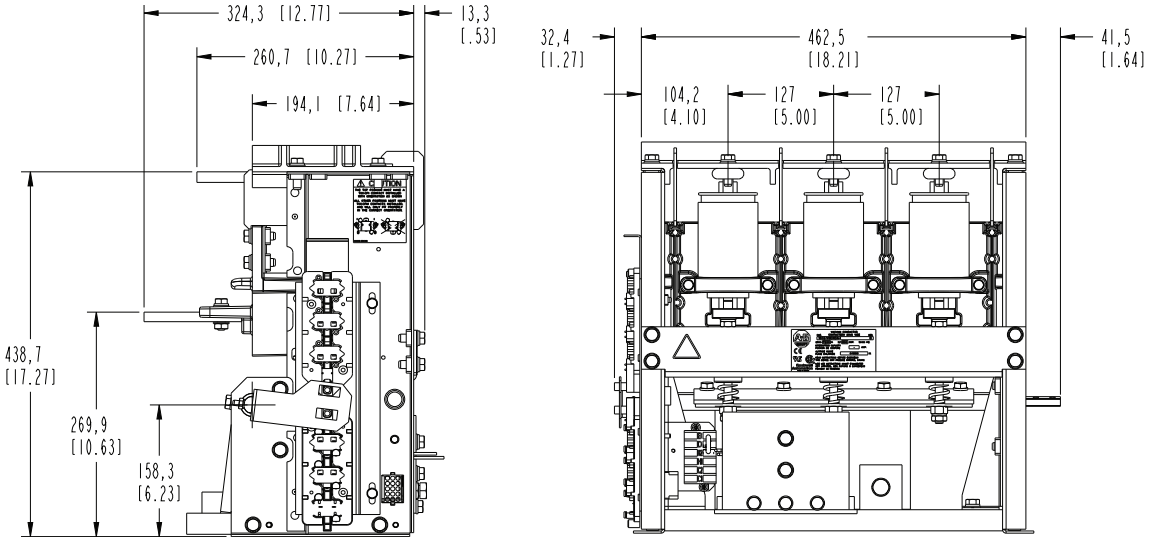

Typical Schematic

Typical IntelliVAC Control Circuit (450A, Electrically-held)

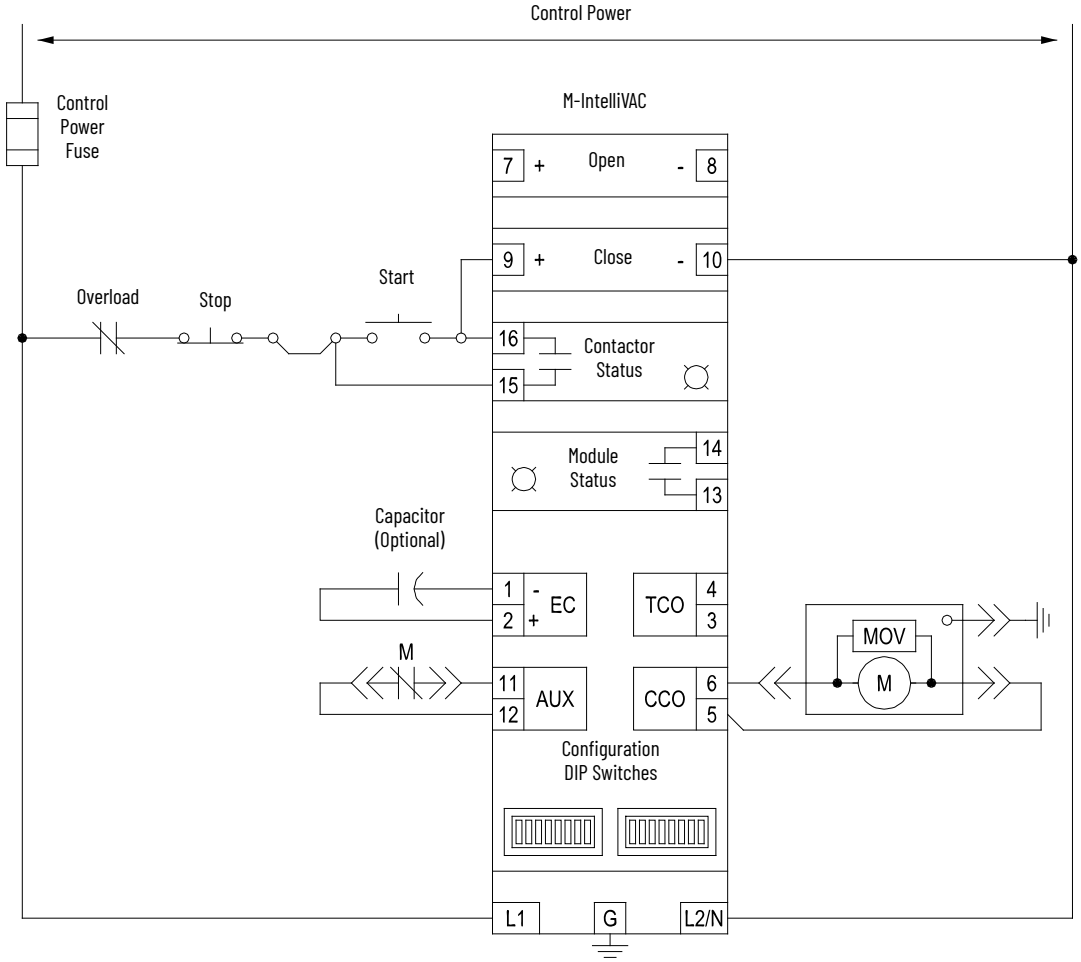

Typical Electromechanical Control Circuit (450A, Electrically-held)

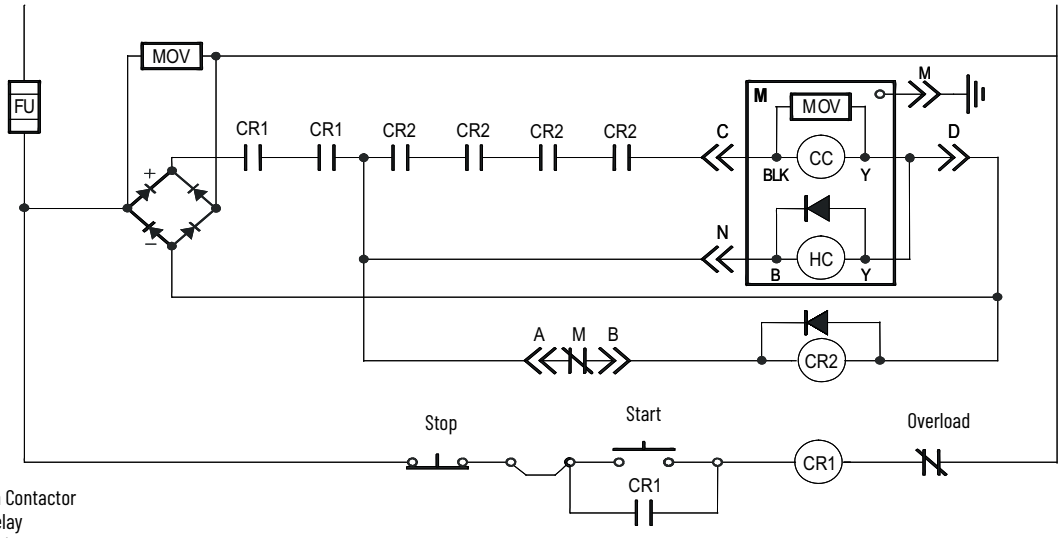

M - MV Vacuum Contactor
CR1 - Control relay
CR2 - Economizing relay
CC - Closing coil
HC - Holding coil

Mechanical Latch Kit

Electrically-held, 450 A, vacuum contactors (Series E and later) can be retrofitted with a mechanical latch assembly using this kit (1502-4MLK). The kit is suitable for use with vacuum contactors 1502-VC4DBDA-0, as listed in Table 3 on page 8.

The kit comes with all required components and instructions. The kit must be installed by qualified personnel.

If a mechanical latch contactor is known to be required, it is recommended that a suitable contactor be ordered direct from the factory (for example, 1502-VC4DBDB-*xx*).

Specifications

Table 5 - Voltage Rating(1)

Bulletin 1502 Medium Voltage Contactor		450 A	800 A
Maximum Rated Voltage		7200	7200V
System Voltages		2400, 3300, 4160, 4800, 6600, 6900	2400V, 3300V, 4160V, 4800V, 6600V, 6900V
Dielectric Voltage Withstand Rating	For 60 seconds (kV)	18.2/20 (IEC)	18.2 / 20 (IEC) kV
Basic Impulse Level (B.I.L.) Withstand	Phase to Ground, Phase to Phase (kV)	60	60
Frequency Ratings	Hertz	50/60	50/60

(1) The voltage ratings listed are valid up to 1000 m (3300 ft). See Table 4 for ratings above this altitude.

Table 6 - Current Ratings(1)

Bulletin 1502 Medium Voltage Contactor		450 A	800 A
Rated Continuous Current		450 A	800 A
Maximum Interrupting Current Rating	2400V	6000 RMS symmetrical amps	12,500 RMS symmetrical amps
	5000V	6000 RMS symmetrical amps	12,500 RMS symmetrical amps
	7200V	6000 RMS symmetrical amps	12,500 RMS symmetrical amps
Maximum Interrupting MVA Rating	2400V	25 Sym MVA	50 Sym MVA
	5000V	50 Sym MVA	100 Sym MVA
	7200V	75 Sym MVA	150 Sym MVA
Short-Circuit Withstand at Rated Voltage	Current Peak ½ cycle	55 kA	85 kA
Short Time Current Rating Capability	For 1 s	6.0 kA	12.0 kA
	For 30 s	2.4 kA	4.8 kA
Chop current (average rms amperes)		0.5	0.5
Make and Break Capability at Rated Voltage		4.0 kA	8.0 kA
Ambient Temperature		40 °C (104 °F)	40 °C (104 °F)

(1) The current ratings that are listed are valid up to 1000 m (3300 ft). See Table 4 for ratings above this altitude.

Table 7 - Contactor Coil Data, IntelliVAC Controlled

Bulletin 1502 Medium Voltage Contactor			450 A	800 A
Control Voltage (V_{CTL})	Coil Voltage (V_{CL})			
110...240V AC or 110...250V DC(1)	VAC: $V_{CL} = \sqrt{2} \times V_{CTL}$ (Max.) VDC: $V_{CL} = C_{CTL}$	Close Current	4.3 A_{DC} (200 ms)	12 A_{DC} (200 ms)
		Hold Current	0.48 A_{DC}	0.7 A_{DC}
		Pick-up Voltage(1)	95V	95V
		Dropout Voltage(1)	75V	75V
		Trip Current	5.5 A_{DC} (200 ms)	5.2 A_{DC} (200 ms)
		Trip Voltage(1)	70V	70V

(1) Control voltage, as measured at the input of the IntelliVAC control module.

Table 8 - Contactor Coil Data, Electromechanical Relay Controlled

Bulletin 1502 Medium Voltage Contactor		450 A	800 A
Control Voltage (V_{CTL}) 120V AC/ 230V AC	Coil Inrush Current – Electrically Held	7.3	13.1 A
	Coil Inrush Current – Mechanical Latch	11.5	13.1 A
	Coil Inrush Current – Mechanical Latch Trip	—	—
	Coil Continuous Current	0.11 A	0.24 A
	Coil Pick-up Voltage	102V AC	102V AC
	Coil dropout Voltage	75V AC	75V AC
	Trip Voltage	70V AC	84V AC
Coil Voltage (V_{CL}), 110V DC/ 208V DC	Coil Inrush Current – Electrically Held	8.3	7.1 A
	Coil Continuous Current	0.13 A	0.24 A
	Coil Pick-up Voltage	196V AC	196V AC
	Coil dropout Voltage	145V AC	145V AC

Table 9 - Operational Characteristics

Bulletin 1502 Medium Voltage Contactor		450 A	800 A
Mechanical Life(1)	Electrically Held	2,500,000 operations	250,000 operations
	Mechanical Latch	100,000 operations	100,000 operations
Electrical Life(1)		1,000,000 operations	250,000 operations
Switching Frequency	Electrically Held	600 operations per hour	600 operations per hour
	Mechanical Latch	150 operations per hour	150 operations per hour

(1) If regular maintenance is performed, as detailed in this manual.

Table 10 - Opening and Closing Times

Bulletin 1502 Medium Voltage Contactor		450 A	800 A
Electromechanical Relay Controlled			
Maximum Closing Time (120V AC)	50/60 Hz	160 ms	200 ms
Maximum Opening Time (Normal Dropout)	50/60 Hz	160 ms	250 ms
Maximum Opening Time (Mechanical Latch)	50/60 Hz	50 ms	70 ms
IntelliVAC and IntelliVAC Plus Control			
Maximum Closing Time	120/240V AC	100/70	150 ms
Maximum Opening Time (without delay)(1)	120/240V AC	60	70 ms

(1) A contactor drop-out delay can be configured with the IntelliVAC control module (see publication 1503-UM060).

Table 11 - Capacitor Switching (max. kVAR)

Bulletin 1502 Medium Voltage Contactor		450 A	800 A
System Voltage	2400V	800 KVAR	2000 KVAR
	4160V	1400 KVAR	3000 KVAR
	6900V	2000 KVAR	4000 KVAR

Table 12 - General

Bulletin 1502 Medium Voltage Contactor	450 A	800 A
Standard Altitude Capability (1)(2)	1000...5000 m (3300...16,500 ft)	1000...5000 m (3300...16,500 ft)
Contactor Weight	21.8 kg (48 lb)	53.5 kg (118 lb)
Auxiliary Contact Rating	A600	A600
Auxiliary Contacts on the Vacuum Contactor (max.)(3)	3 N.O. / 3 N.C.	3 N.O. / 3 N.C.

(1) The voltage and current ratings that are listed are valid up to 1000 m (3300 ft). See Table 4 on page 9 for ratings above this altitude.
(2) Altitude adjustment is required.
(3) The number of contactor auxiliary contacts depends on the contactor type. Some of the contacts are used in the typical control schemes used.

1503C Relay Control Panel

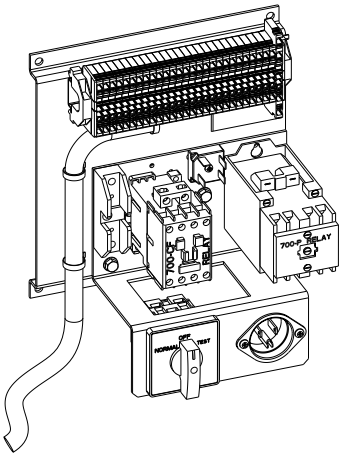

The Rockwell Automation relay control panel helps to make sure reliable operation of the contactor within its published specifications. The relays break the DC current drawn by the closing, holding, and trip coils.

The special pilot relays coordinate their pick-up and drop-out voltages with the pick-up and drop-out voltages of the contactor, which helps to make sure reliable operation of the circuit in undervoltage conditions.

The control panel comes with a 3.05 m (10 ft) wire harness to connect to the vacuum contactor. The control panel includes control relays, rectifier, MOV, terminal blocks (1492-P4), test switch and plug. A 220/240V, 50/60 Hz control panel does not include the test plug. A control panel without a test switch and plug is available for multiple contactor applications.

Product Selection

Table 13 - Relay Control Panel Product Selection

Voltage	Contactor Type	Cat. No.
110/120V AC, 50/60 Hz	Electrically held, 450 A	1503C-E4D
	Mechanical latch, 450 A	1503C-M4D
	Electrically held, 800 A	1503C-E8D
	Mechanical latch, 800 A	1503C-M8D
220/230V AC, 50/60 Hz	Electrically held, 450 A	1503C-E4E
	Electrically held, 800 A	1503C-E8E

Dimensions

Relay Control Panel Dimensions

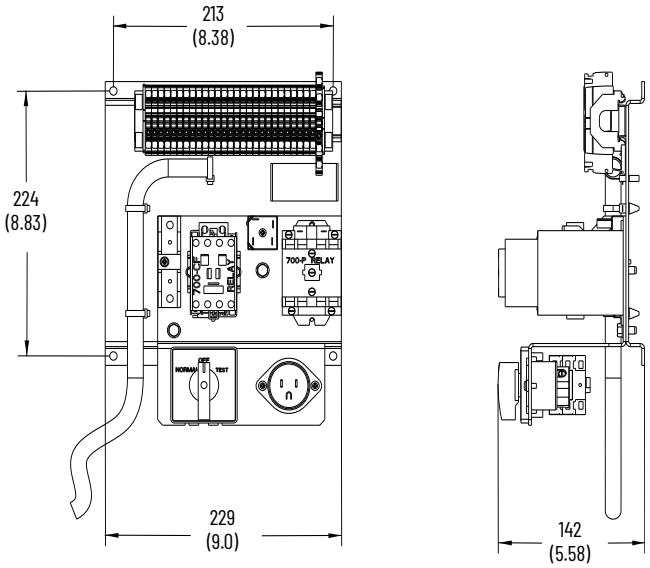

Approximate dimensions in mm (in.).

Specifications

Table 14 - Relay Control Panel Specifications

Description	Specification	
Control	110/120V AC, 50/60 Hz	220/240V AC, 50/60 Hz
Cable	3.05 m (10 ft)	3.05 m (10 ft)
Terminal Blocks	Qty 27, 1492-P4	Qty 27, 1492-P4
Wire Gauge	#14 AWG	#14 AWG

1503S Non-load-break Isolation Switches

The isolation switch is a non-load-break type switch, and is available in clip-on or bolt-on fuse versions. The isolation switch works in conjunction with the contactor and the isolation switch handle to isolate the power cell when the isolation switch handle is moved to the OFF position.

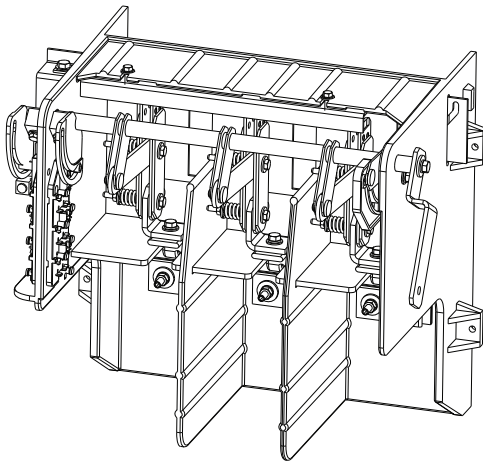

Standard features:

- Clip-on or bolt-on fuse versions
- Line and load fuse clips
- Electrically and mechanically interlocked when used with the Allen-Bradley handle module and contactor
- Shutter mechanism isolates power cell from medium voltage

ATTENTION: These devices are not intended to break any load.

Product Selection

Table 15 - Non-load-break Isolation Switch Product Selection

Switch Size[1]	Non-Load-Break Isolation Switch Options	Cat. No.
400 A	Clip-on fuse clips	1503S-4C
	Bolt-on fuse clips	1503S-4B
600 A	Clip-on fuse clips	1503S-6C
	Bolt-on fuse clips	1503S-6B
800 A	Bolt-on fuse clips	1503S-8B

(1) Enclosed rating at 40 °C (104 °F).

Dimensions

400 A (Clip-On Fuses)

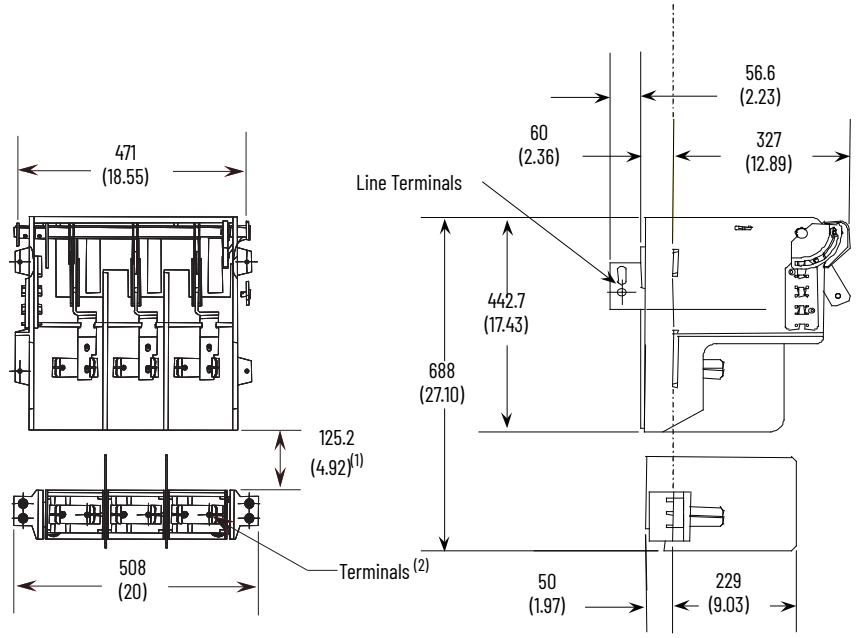

1) Assumes a 403.4 mm [15.88 in.] fuse is used.
2) Includes terminal connection hardware.
Approximate dimensions in mm [in.].

400 A (Bolt -on Fuses)

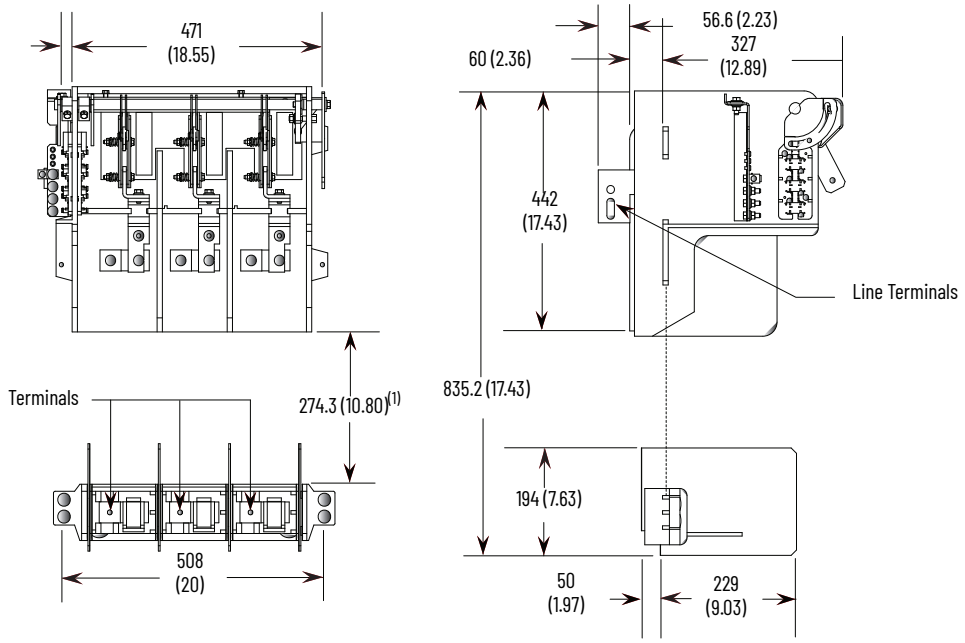

1) Assumes a 489 mm [19.25 in.] fuse is used.
Approximate dimensions in mm [in.].

600 A (Clip -on Fuses)

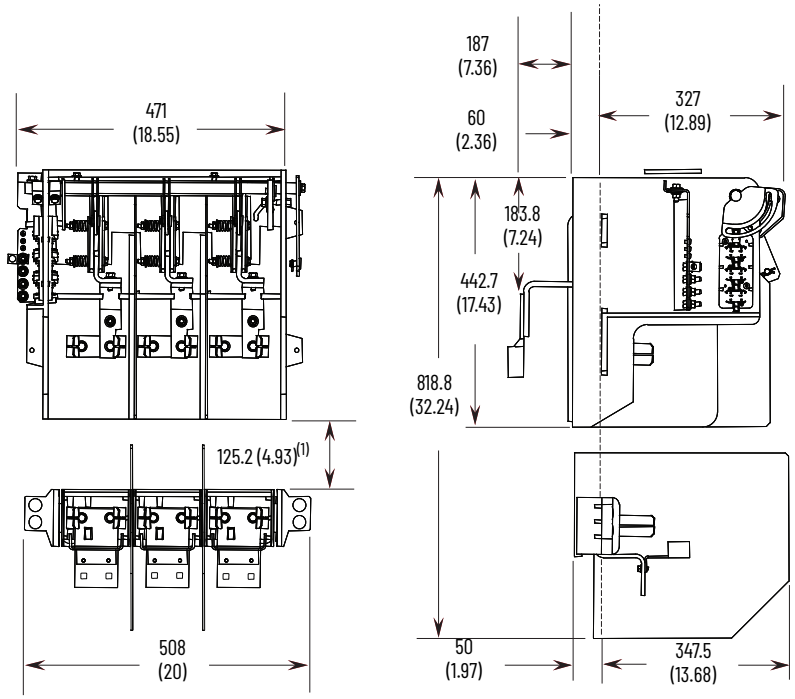

1) Assumes a 403.4 mm [15.88 in.] fuse is used.
Approximate dimensions in mm [in.].

600 A (Bolt -on Fuses)

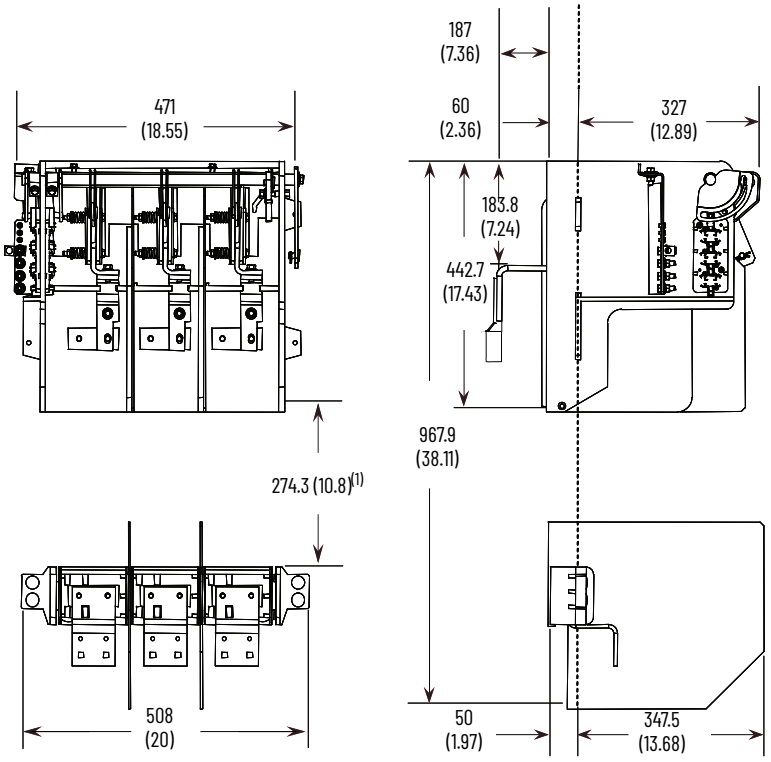

1) Assumes a 489 mm [19.25 in.] fuse is used.
Approximate dimensions in mm [in.].

800 A (Bolt -on Fuses)

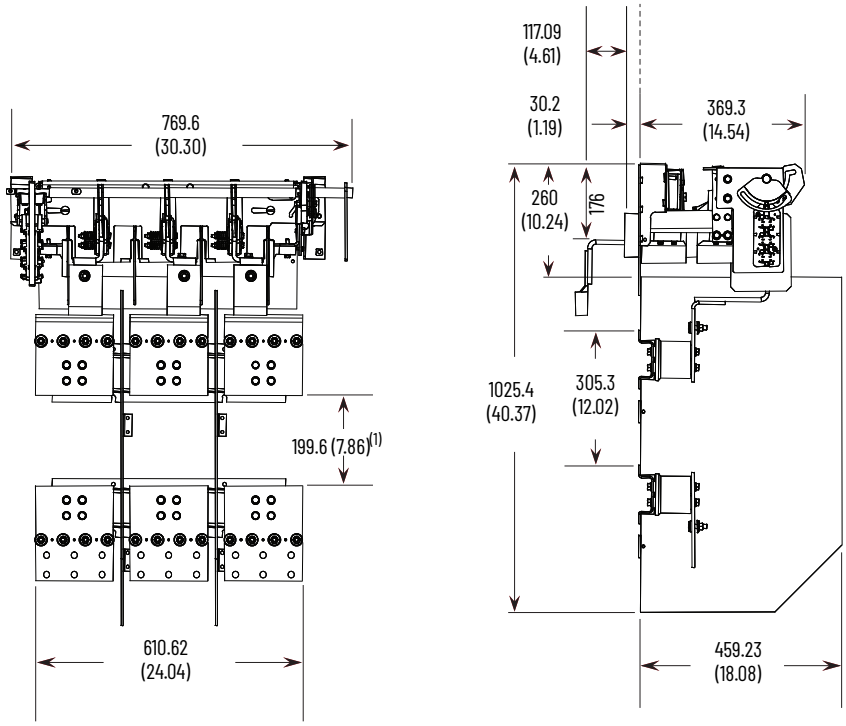

1) Assumes a 489 mm [19.25 in.] fuse is used.
Approximate dimensions in mm [in.].

Specifications

Table 16 - Non-load-break Isolation Switch Specifications

Description	Specification
Type	3-pole, gang operated
Full Load Current(1)	400 A, 600 A, 800 A
Auxiliary Contacts	• Provisions for 3 N.O./3 N.C. • 2 N.O./2 N.C. auxiliary contacts included
Contact Type	Cat. No. 700-CPM
Contact Rating	NEMA 2 x A600 and 2 x P600
Net Shipping Weight	• 400 A: 25 kg (55 lb) • 600 A: 35 kg (77 lb) • 800 A: Consult factory

(1) Enclosed with 40 °C (104 °F) ambient max.

ATTENTION: These devices are not intended to break any load.

Isolation Switch Handle Module

Standard handle and mechanical interlock assembly complete with provisions for key interlocking.

- Padlocking provision: up to 3 padlocks in open position, 1 padlock in closed position
- Interlock with the power cell door
- Provision for key interlocking

Product Selection

Table 17 - Isolation Switch Handle Module Specifications

Description	Amperage Rating	Cat. No.
Isolation Switch Handle Module	400 A	1503-HM1
	600 A and 800 A	1503-HM2

Dimensions

Left Side View (400/600/800 A)

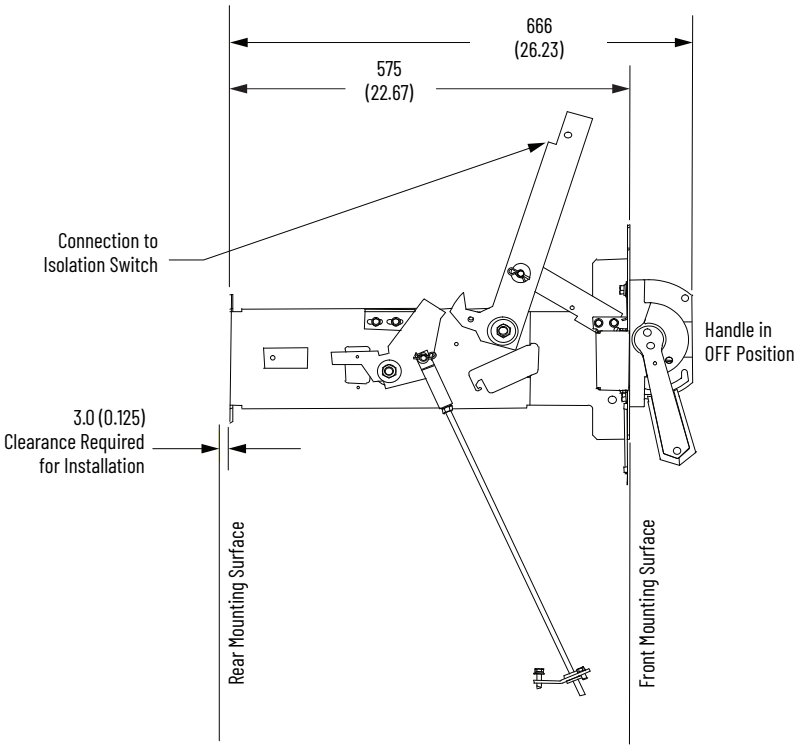

Front View (400/600/800 A)

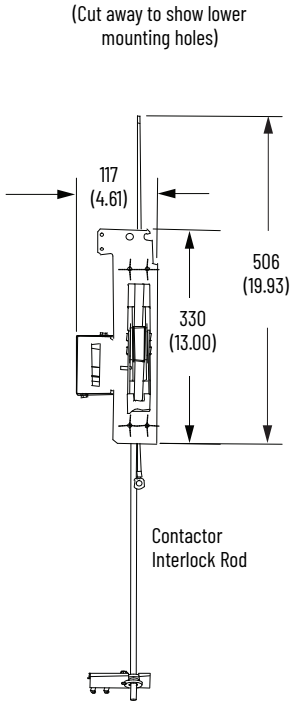

Approximate dimensions in mm (in.).

Contactor Interlock rod length varies between 400 A and 600/800 A versions. The longest rod length is provided with the 600/800 A version.

1503VC IntelliVAC Control Module

The Allen-Bradley Bulletin 1503VC IntelliVAC controller (1503VC-BMC5) offers a superior, efficient, and flexible means of controlling Bulletin 1502 vacuum contactors. The IntelliVAC controller offers a scalable solution for multiple medium voltage control applications. A wire harness for 1502 vacuum contactors is generally required.

IntelliVAC provides basic control capabilities for 450 A and 800 A contactors (electrically held and mechanical latch) using a single device. It offers enhanced reliability through better diagnostics and coordination between the power fuses and the vacuum contactor drop-out time. Productivity is improved using the power loss ride through (TDUV) and contactor re-closing control features.

- Universal input voltage (110...240V AC, 50/60 Hz or 110...250V DC)
- Consistent vacuum contactor pick-up time
- Selectable and repeatable vacuum contactor drop-out times (50, 75, 100, 130, 150, 175, 200, or 240 ms)
- Altitude compensation (-1000...+5000 m) eliminates mechanical hardware changes at high altitude (450 A vacuum contactors)
- Power loss ride-through logic (TDUV) with selectable drop out time (0.2, 0.5, 1.0, or 2.0 s) requires only an external capacitor
- Re-closing control features (anti-kiss and anti-pumping protection)
- Status indication (LEDs and relay outputs) allows integration in control system and aids troubleshooting
- Temporary motor jog function (separate input) to allow process set-up
- Delayed motor re-start prevents rapid cycling of vacuum contactor, protecting the connector motor

Dimensions

IntelliVAC Control Module Dimensions

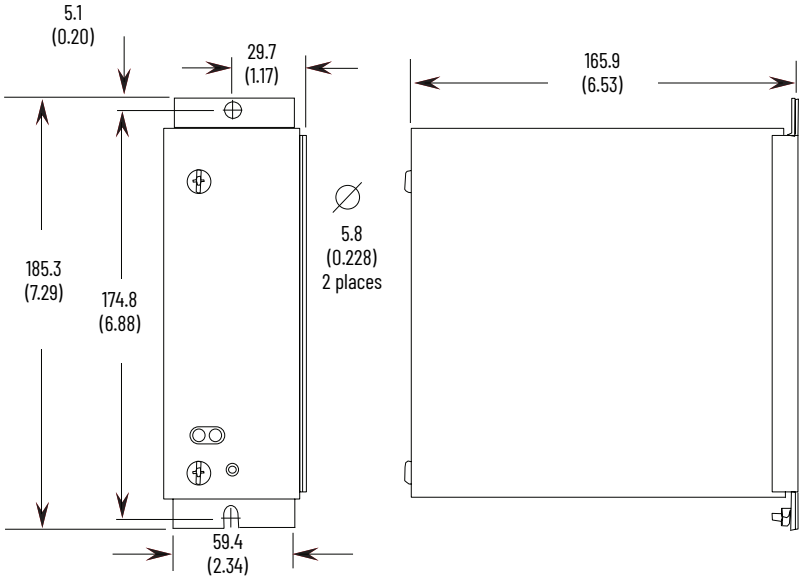

Control Power Selector Assembly

A selector switch and power receptacle are provided to allow 'Normal', 'Off', and 'Test' sources of control power for the IntelliVAC control module. A 115V AC receptacle, suitable for use in North America, is provided as part of the 1503C-CPS1.

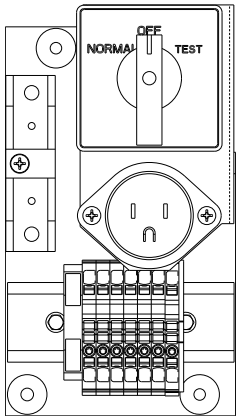

Table 18 - Control Power Selector Assembly Catalog Numbers(1)

Description	Cat. No.
With 120V AC receptacle for North American power cords.	1503C-CPS1
With provisions for mounting a power receptacle (provided by customer).	1503C-CPS2

(1) For use with IntelliVAC control module.

Specifications

Table 19 - IntelliVAC Control Module Specifications

IntelliVAC Catalog Numbers(1)		Vacuum Contactor Type	
1503VC-BMC5	IntelliVAC	Electrically Held or Mechanical Latch	
Ratings and Approvals			
Input Voltage		AC	110...240V, 47...63 Hz(2)
		DC	110...250V
Input Current(3)	AC(2)	Inrush (max.)	25 A (1/2 cycle)
		Idle (max.)	125 mA
		Close (max.)	11.3 A
		Hold (max.)	300 mA
		Latch Trip (max.)	7.0 A
	DC	Inrush (max.)	25 A
		Idle (max.)	35 mA
		Close (max.)	4.8 A
		Hold (max.)	100 mA
		Latch Trip (max.)	3.7 A
Command Inputs		AC	110...240V, 9 mA max.(2)
		DC	50...250V, 9 mA max.
Status Output Contacts		AC	250V, 5 A, R load(2)
		DC	30V, 5 A, R load
Standards and Approval		cULus, IEC, CE	

(1) A wire harness is required for Bulletin 1502 vacuum contactors when IntelliVAC is used.
(2) All AC values are rms, except where noted.
(3) The maximum currents shown are for either the 450A or 800A Bulletin 1502 vacuum contactors. Close current duration is 200 milliseconds.

1503E MV SMC-50 OEM Controller Kits

Based around the SMC-50 Smart motor control module, we offer various advanced controlling and electronic motor-starting styles.

- Soft start with Selectable kickstart
- Soft stop
- Pump control start/stop
- Torque control
- Current limit start with selectable kickstart
- Sensorless linear speed acceleration with selectable kickstart
- Sensorless linear speed deceleration
- Dual ramp with selectable kickstart
- Emergency run (full voltage)

Control Inputs and Outputs

One digital I/O card (150-SM4) is required for medium voltage applications, and must be inserted in Port 7.

Ground Fault and Thermistor/PTC Protection

One PTC ground fault card (150-SM2) is optional and provides ground fault indication when used with an external core balance current transformer (825-CBCT) or interface with motor PTC sensors. It must be inserted in Port 8.

Human Interface Module (HIM)

One Human Interface Module (20-HIM-A6) is optional, yet recommended and lets you:

- configure/monitor all controller parameters
- configure/monitor all option modules (for example, 150-SM4, digital I/O, etc.)
- use the general startup configuration wizard of the SMC-50 module

Location options:

- Typically inserted in the HIM bezel port on the upper right of the control module
- A remote (door mount) version (20-HIM-C6S) provides operation in a NEMA 4X/12 environment

Optional Communication Modules

These communication boards mount in the control module.

- DeviceNet® (20-COMM-D)
- ControlNet (20-COMM-C)
- EtherNet/IP™ (20-COMM-E)
- PROFIBUS DP (20-COMM-P)
- Remote I/O (20-COMM-R)
- RS485 (DFI) (20-COMM-S)

Product Selection

The OEM starter frame consists of a fusible non-load-break isolation switch, an isolation switch handle, a vacuum contactor, control circuitry, and a medium-voltage door. These components are not a complete motor controller. You must add appropriate control circuitry for the application, power, current transformer, control power transformer, overload protection, and a suitable enclosure.

Table 20 - 1503E MV SMC-50 OEM Controller Kits Product Selection

Description	Frame (1000...4160V, 180...360 A)	Power Stacks (1000...6900V 180...600 A(1))
Control Module	Required	Required
Interface Board	Required	Required
Fiber Optic Cables	Required	Required
Voltage Sensing Board	Included in frame as standard	Required
Control Panel / IntelliVAC	Optional(2)	Optional(2)
Bypass Contactor	Optional(3)	Optional(3)
Gate Drive Test Power Supply	Optional(4)	Optional(4)

(1) 180...360 A for 1000V.
(2) Required when Bulletin 1502 bypass contactor is selected.
(3) Bulletin 1502 vacuum contactor can be supplied. If not selected, OEM must supply a bypass contactor with equivalent specifications. The SCRs must be bypassed once the driven load is up to speed. The SCRs are not rated for continuous duty; failure to bypass the SCRs will result in component failure. Bypass contactors must have a drop-out time less than 60 ms.
(4) Required for testing, commissioning, and troubleshooting gate-firing circuits.

Typical Power System Diagram

Typical SMC-50 Power System • Bulletin 1562F (3300/4160V shown)

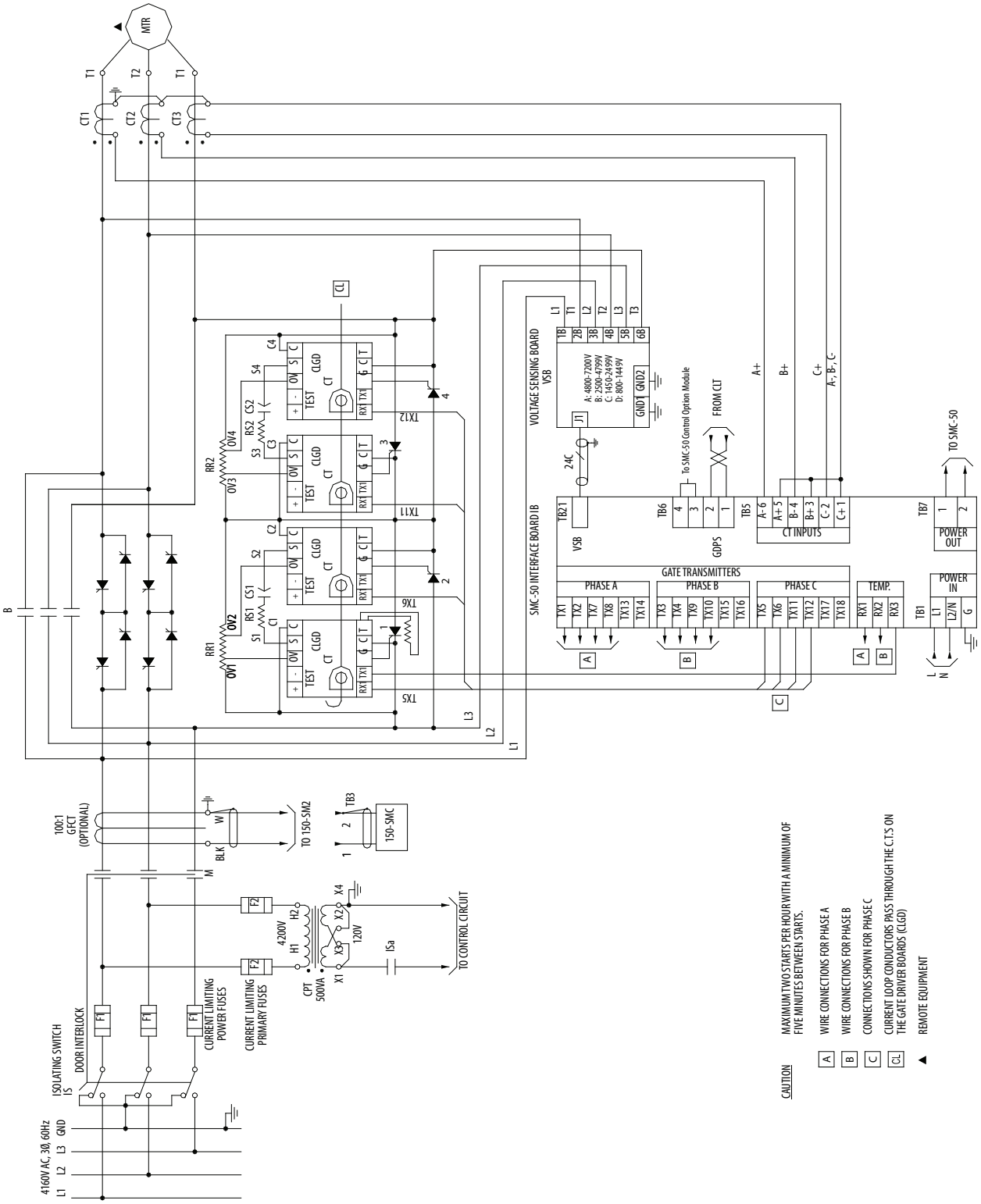

Typical Control Circuit – Standard Module

Typical Bulletin 1562F IntelliVAC Control Circuit[(a)]

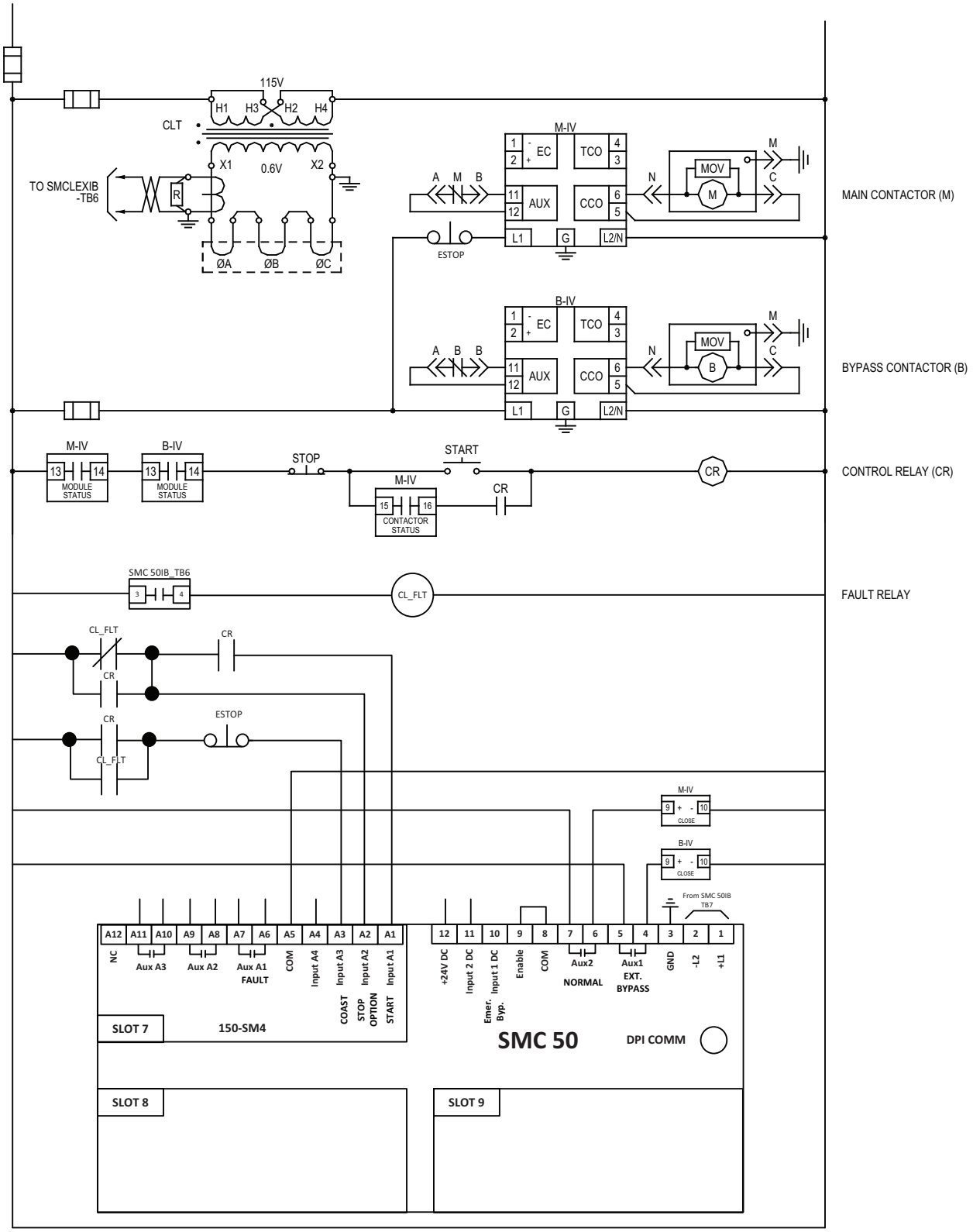

(a) Requires optional Main and Bypass control panels, as well as control relays and pilot devices.

Specifications

Table 21 - Functional Design Specifications

Features			Description
Standard Features	Installation	Power Wiring	The MV SMC-50 Controller must be wired with an isolation contactor as per local/regional codes. Bypass contactors must be employed after the controller has brought the motor to full speed.
		Control Wiring	2- and 3-wire control for a wide variety of applications.
	Set-up	Keypad	The MV SMC-50 Controller is configured with the front keypad and backlit LCD display.
		Software	Parameter values can be downloaded to the MV SMC-50 Controller with Drive Tools programming software and an optional (20-COMM-*x*) communication module.
	Communications (two ports)		One serial (DPI) port provided for connection to optional human interface. One serial (DPI) port provided for optional 20-COMM-*x* modules (mounted in SMC-50 control module)
	Starting Modes		Soft Start with selectable kickstart, Soft Stop, Current Limit Start with selectable kickstart, Linear Acceleration with selectable kickstart, Linear Deceleration, Dual Ramp with selectable kickstart, Full Voltage
	Protection and Diagnostics		Power loss, line fault, voltage unbalance, current unbalance, excessive starts/hour, phase reversal, undervoltage, overvoltage, controller temperature, stall, jam, open gate, overload, underload, communication fault, ground fault
	Metering		Amps, volts, elapsed time, motor thermal capacity usage, power (mW, mW/h, PF)
	Status Indication		Stopped, ramping, stopping, at speed, and fault.
	Auxiliary Contacts		One single-pole, double-throw contact programmable as normal or External Bypass; one contact programmable as normal or fault.
	Control Voltage		110/120...220/240V AC, 50/60 Hz
	Fiber Optic Cables		Available in 2.5 m or 5.0 m. Provides isolation between interface board and power stacks.
	Soft Stop		Extended coast-to-rest to minimize load shifting. Ramp down time may be adjusted.(1)
Optional Features	Bypass Contactor		Required to bypass the SCRs once the motor is up to speed. Bulletin 1502 can be supplied with SMC OEM kits.
	Communication Modules		DeviceNet, ControlNet, EtherNet/IP, PROFIBUS DP, Remote I/O, RS-485 (DF1)

(1) Do not exceed thermal capacity limits. Combined maximum ratings for MV SMC-50 units are:
- 30 second Start/Stop
- 40 °C (104 °F) ambient temperature
- 2 start/stop per hour
- 450% FLC (average during starting)

If any of the above maximums are not required, it is generally possible to exceed some of the other ratings. Consult factory for details.

Assembled Power Stack Frame

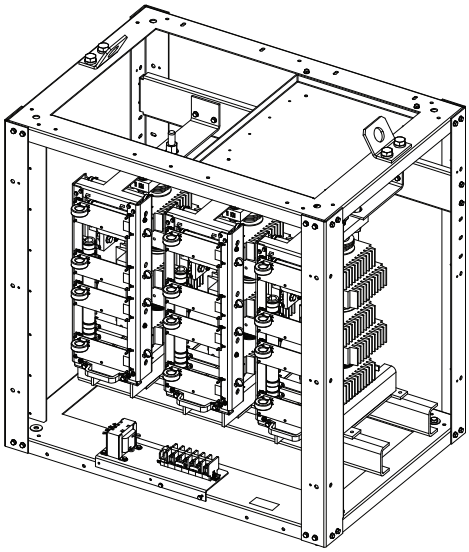

The Bulletin 1503 180/360 A SMC-50 OEM frame is a self-contained power unit for applications from 1000...4160V that can be easily installed. To fully install the frame, the OEM must complete the following:

- Connect power cables from the power stacks in the frame to the input power disconnection mechanism, bypass contactor, and motor;
- Mount the SMC-50 control module on the interface board and connect the interface board to the voltage sensing board with wires, and the gate driver boards with fiber optic cables;
- Connect the interface board to OEM-supplied current transformers.

The vacuum bypass contactor is connected in parallel with the SCRs and is controlled by a contact on the SMC-50 control module that opens and closes the vacuum contactor.

The frame includes:

- Three power stacks, comprised of heat sinks, SCRs, snubber caps and resistors, and gate driver boards
- Voltage sensing circuit board
- Installation manual

Product Selection

Table 22 - Options and Catalog Numbers

Description of Frame Options(1)	Cat. No.
1000V, 180 A, 3 phase, 50/60 Hz	1503E-FRZ1T
1000V, 360 A, 3 phase, 50/60 Hz	1503E-FRZ1A
2300V, 180 A, 3 phase, 50/60 Hz	1503E-FRAT
2300V, 360 A, 3 phase, 50/60 Hz	1503E-FRAA
3300V, 180 A, 3 phase, 50/60 Hz	1503E-FRCT
3300V, 360 A, 3 phase, 50/60 Hz	1503E-FRCA
4160V, 180 A, 3 phase, 50/60 Hz	1503E-FRET
4160V, 360 A, 3 phase, 50/60 Hz	1503E-FREA

(1) Voltage ranges:
1000 = 800...1449V
2300 = 1450...2499V
3300/4160 = 2500...4799V

For units greater than 4160V or 360A, see Table 20 on page 23.

Dimensions

Power Stack Frame Dimensions (4160V, 360A)

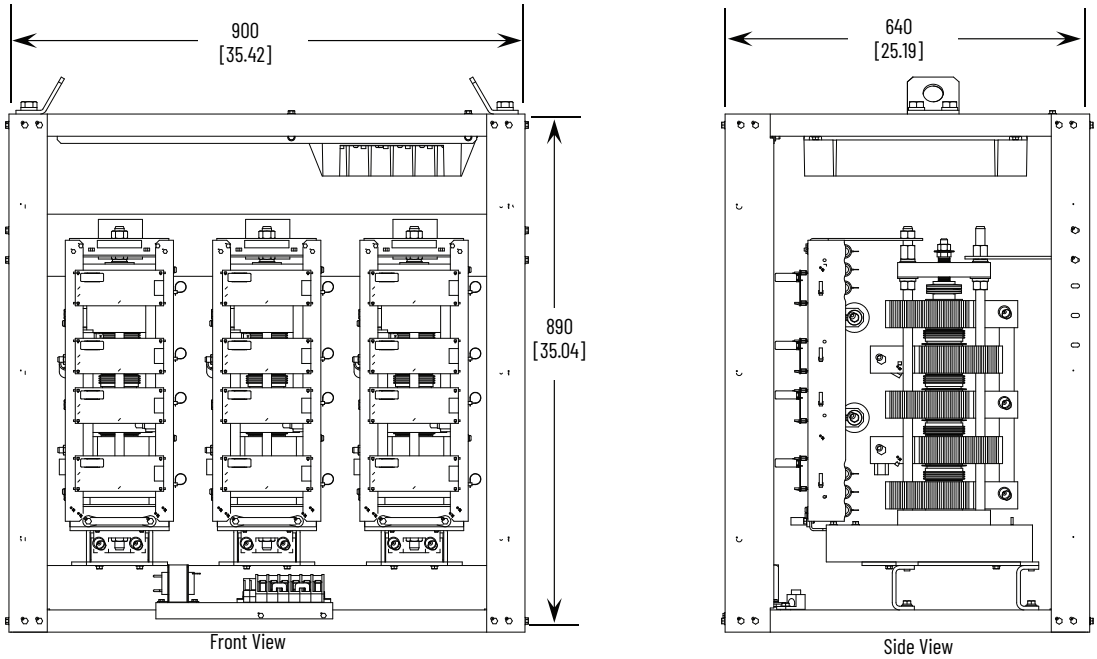

Approximate dimensions in millimeters [inches].

Specifications

Table 23 - Assembled Frame Specifications

Description	180 A		360 A	
Input Voltages (50/60 Hz)	1000V AC, 3 phase, +10% -15% 2300V AC, 3 phase, +10% -15% 3300V AC, 3 phase, +10% -15% 4160V AC, 3 phase, +10% -15%			
Ambient Temperature	0...40 °C (32...104 °F)			
Power Section	6 SCR at 1000V 6 SCR at 2400V		12 SCR at 3300V 12 SCR at 4160V	
Repetitive Peak Inverse Voltage Rating	1000V – 4500 PIV 2400V – 6500 PIV		3300V – 13000 PIV 4160V – 13000 PIV	
Thermal Capacity	600% of FLA, 10 seconds (2 starts per hour, 5 minutes between starts)(1) 450% of FLA, 30 seconds (2 starts per hour, 5 minutes between starts)(2)			
dv/dt Protection	R.C. Snubber Network			
Maximum Heat Dissipation (kW)	Start or Stop Cycle (@ 450% FLA)			Continuous
		180 A	360 A	
	800...2400V	7	13	.25
	2401...5000V	14	26	.25
Altitude	0...1000 m (0...3300 ft) see Table 4 on page 9.			
Net Weight (Shipping)	1000...2400V: 116 kg (255 lb) 3300...4160V: 125 kg (276 lb)			

(1) See Table 22 on page 27.
(2) May require forced ventilation.

Power Stack

The Bulletin 1503 MV SMC-50 OEM Power Stack consists of three modular power stacks that provide excellent mounting flexibility. To fully install the power stacks, the OEM must complete the following:

- Connect power cables from the power stacks to the input power disconnection mechanism, bypass contactor, and motor;
- Mount the SMC-50 control module on the interface board and connect interface board to the voltage sensing board and the gate driver boards with fiber optic cables;
- Mount voltage sensing board and connect to the line and load terminals;
- Connect the interface board to OEM-supplied current transformers.

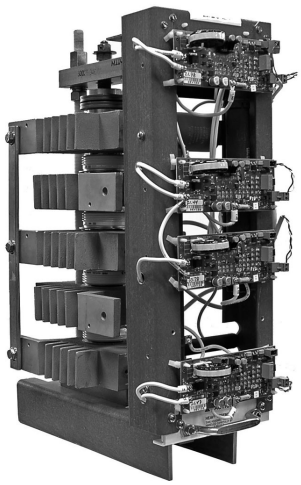

The vacuum bypass contactor is connected in parallel with the SCRs and is controlled by a contact on the SMC-50 control module that opens and closes the vacuum contactor.

The power stacks include:

- Three power stacks, comprised of heatsinks, SCRs, snubber caps, and resistors
- Gate driver boards and mounting hardware
- Installation manual

Product Selection

Table 24 - Power Stack Options and Catalog Numbers

Voltage[1]	Current	Cat. No.
1000V, 3 phase, 50/60 Hz	180 A	1503E-PPZ1T
	360 A	1503E-PPZ1A
2300V, 3 phase, 50/60 Hz	180 A	1503E-PPAT
	360 A	1503E-PPAA
	600 A	1503E-PPAC
3300V, 3 phase, 50/60 Hz	180 A	1503E-PPCT
	360 A	1503E-PPCA
	600 A	1503E-PPCC
4160V, 3 phase, 50/60 Hz	180 A	1503E-PPET
	360 A	1503E-PPEA
	600 A	1503E-PPEC
6900V, 3 phase, 50/60 Hz	180 A	1503E-PPKT
	360 A	1503E-PPKA
	600 A	1503E-PPKC

(1) Voltage ranges:
1000 = 800...1449V
2300 = 1450...2499V
3300/4160 = 2500...4799V
6900 = 4800...7200V

Dimensions

Power Stack Dimensions - 1000/2300V, 180/360A

Overall Dimensions
Width: 186.4 [7.34]
Height: 426.7 [16.8]
Depth: 457.7 [18.02]
Weight: 35 kg [77 lb]
Dimensions in mm [in.].
All dimensions include mounting bracket.

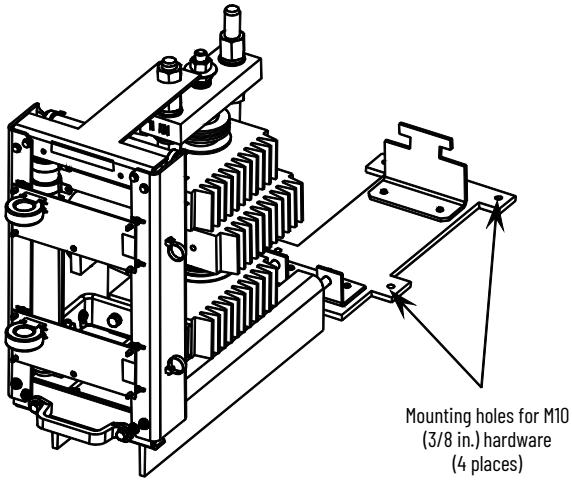

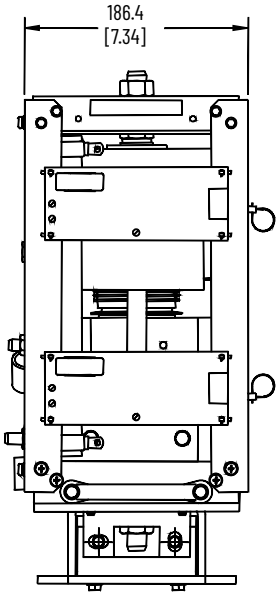

Front View

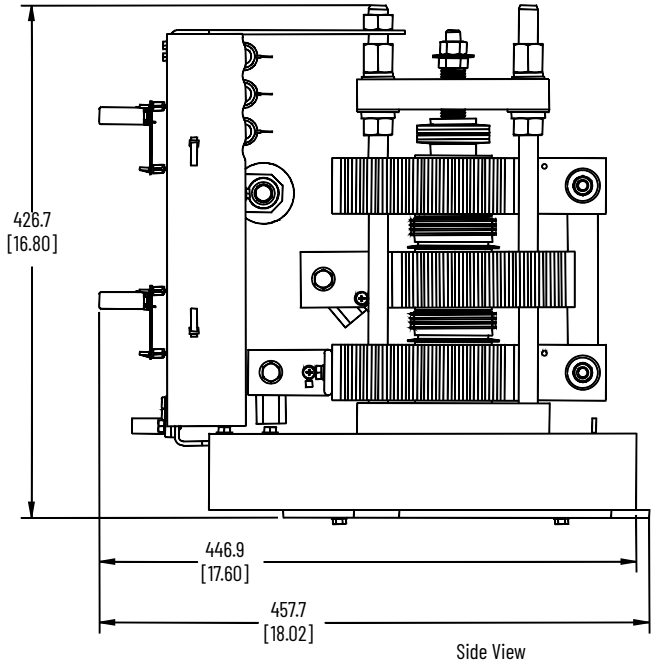

Side View

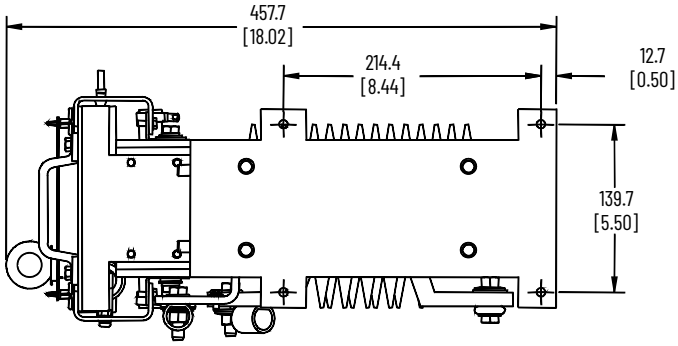

Bottom View

Power Stack Dimensions - 2300V, 600A

Overall Dimensions
Width: 501.2 [14.73]
Height: 444.1 [17.49]
Depth: 461.5 [18.17]
Weight: 44 kg [97 lb]
Dimensions in mm [in.].
All dimensions include mounting bracket.

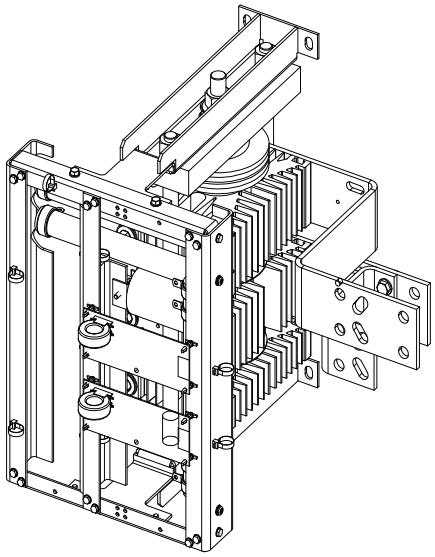

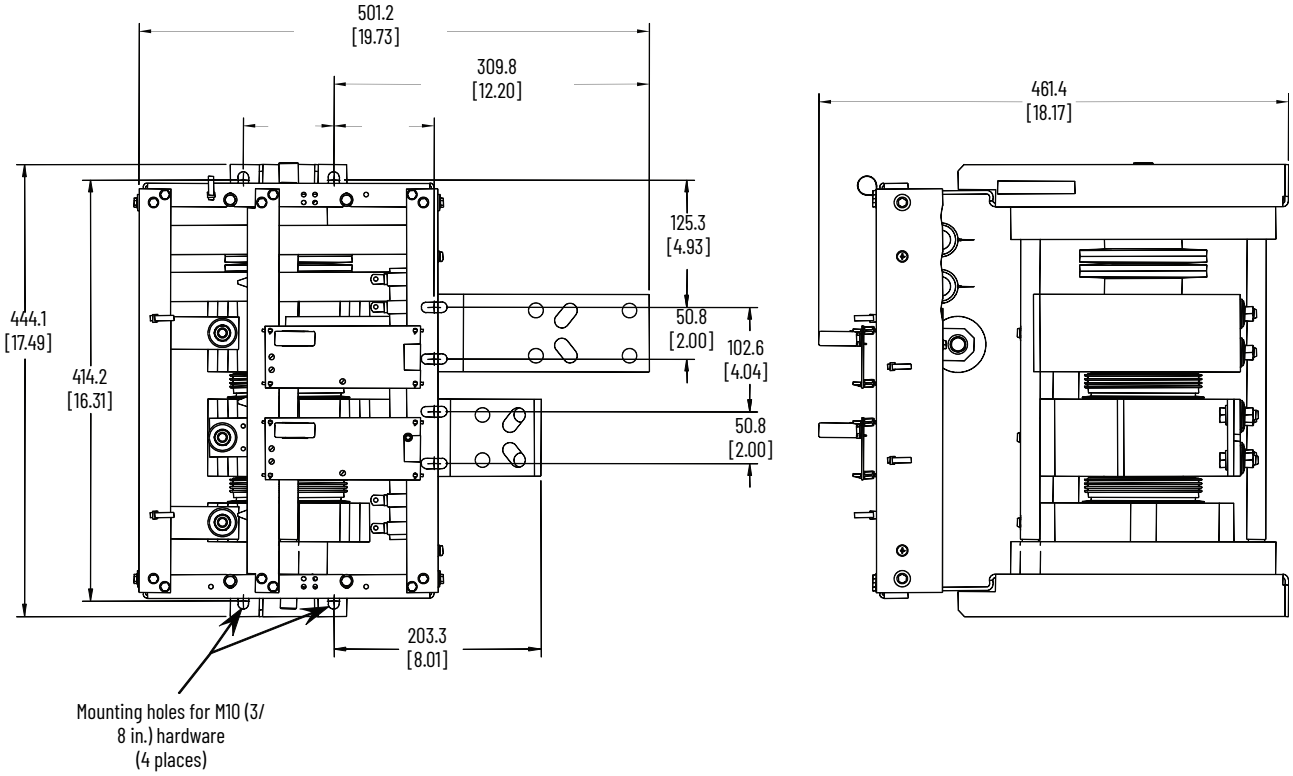

Power Stack Dimensions - 3300/4160V, 180/360A

Overall Dimensions
Width: 186.7 [7.35]
Height: 582.2 [22.92]
Depth: 454.4 [17.89]
Weight: 38 kg [83 lb]
Dimensions in mm [in.].
All dimensions include mounting bracket.

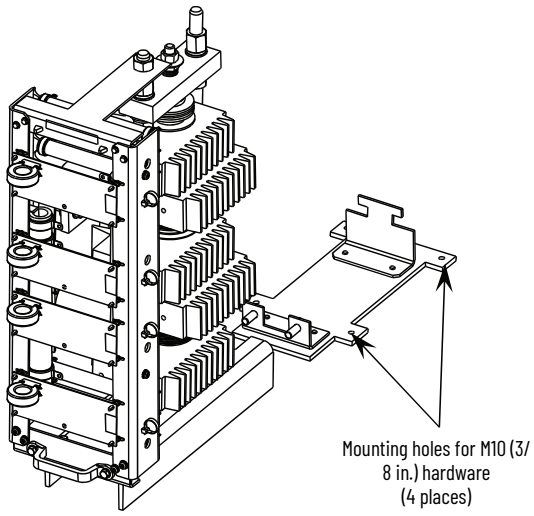

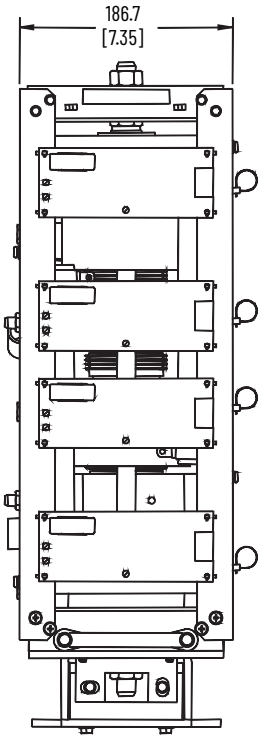

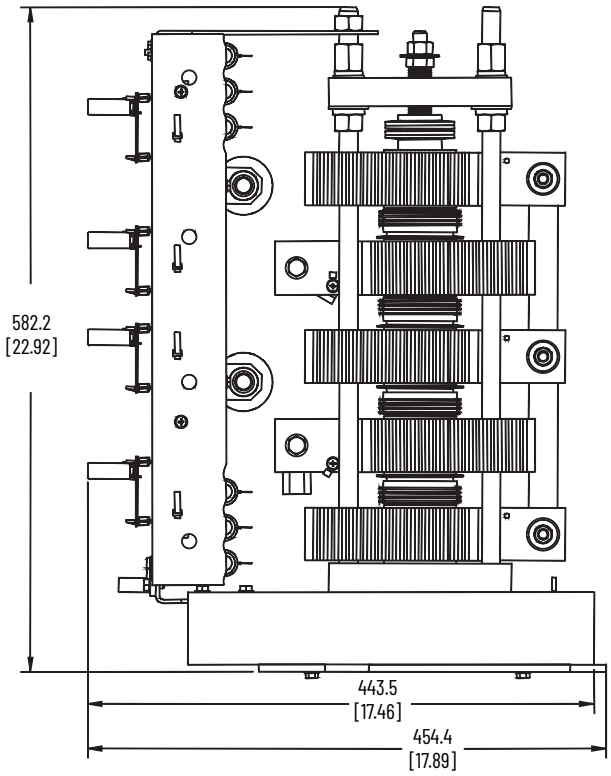

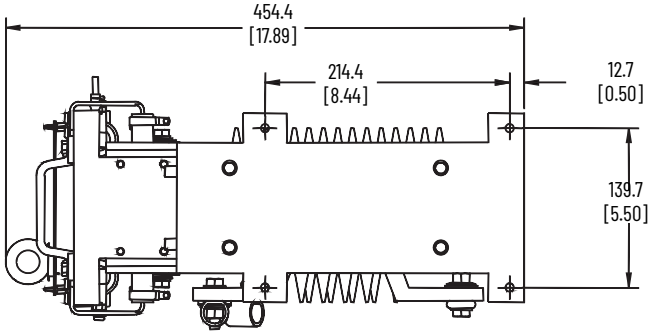

Power Stack Dimensions - 3300/4160V, 600A

Overall Dimensions
Width: 394.7 [15.54]
Height: 611.2 [24.06]
Depth: 461.4 [18.17]
Weight: 51kg [113 lb]
Dimensions in mm [in.].
All dimensions include mounting bracket.

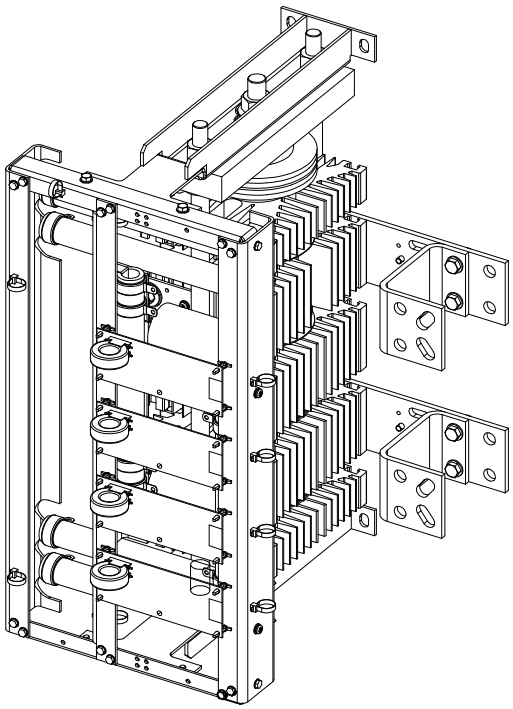

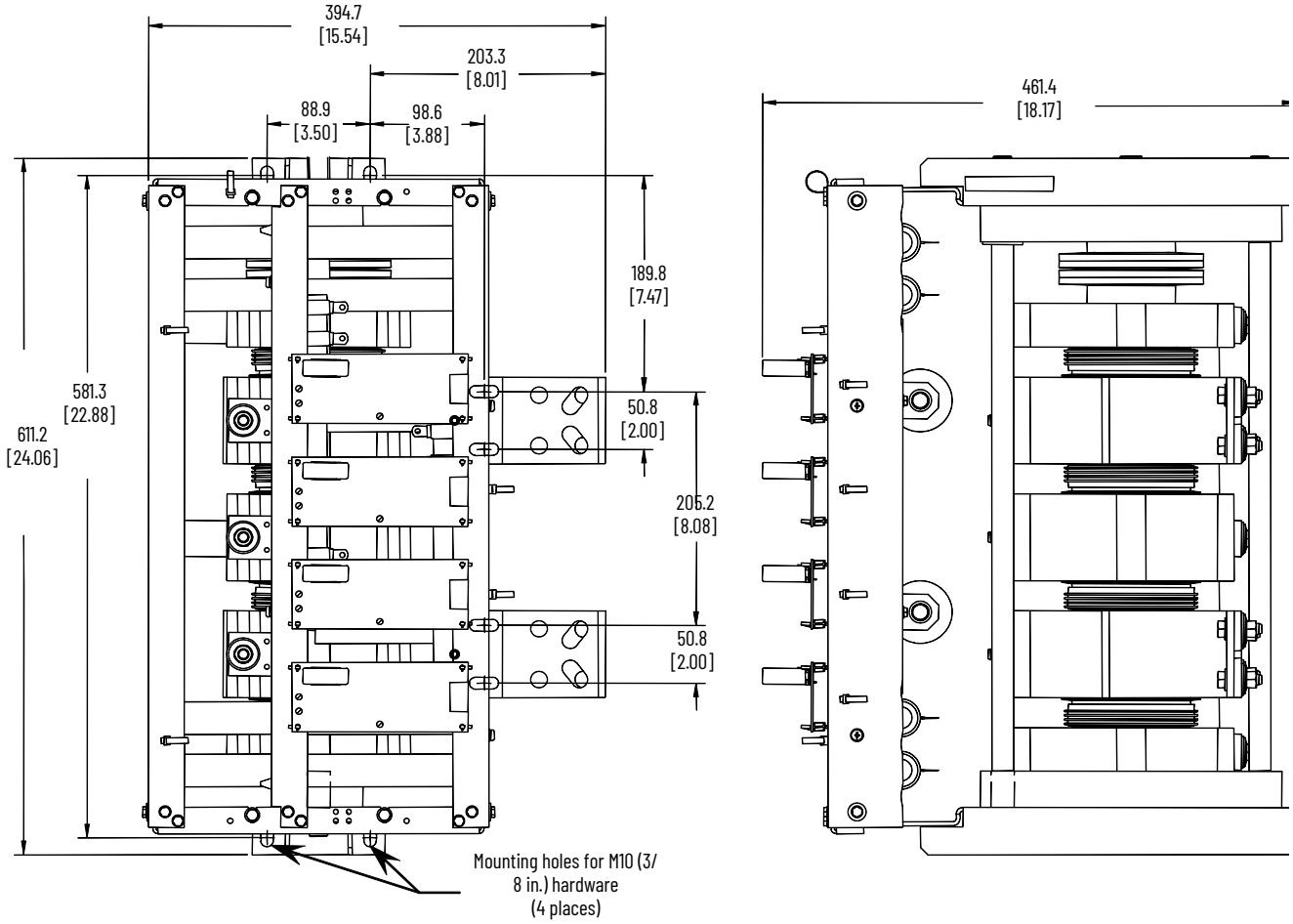

Power Stack Dimensions - 6900V, 180/360A

Overall Dimensions
Width: 451.9 [17.79]
Height: 617.0 [24.29]
Depth: 399.3 [15.72]
Weight: 42 kg [93 lb]
Dimensions in mm [in.].
All dimensions include mounting bracket.

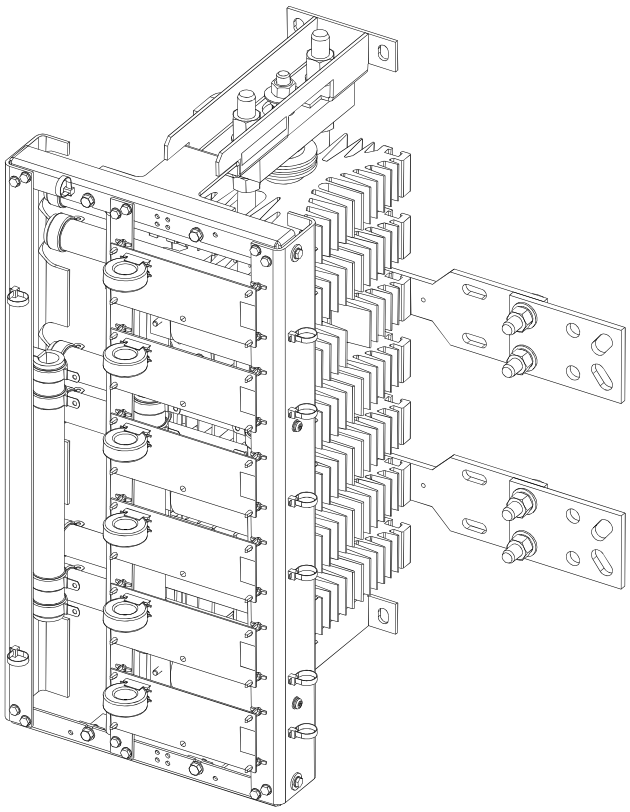

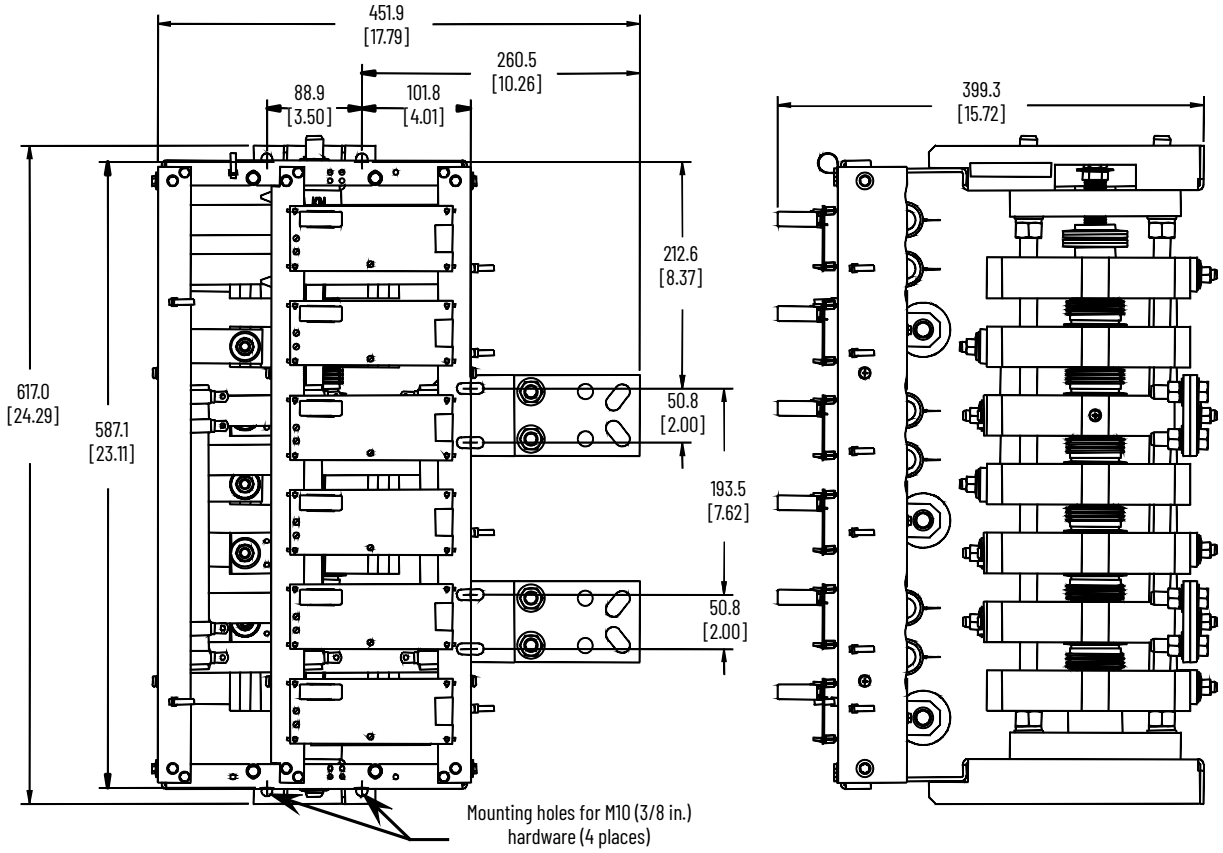

Power Stack Dimensions - 6900V, 600A

Overall Dimensions
Width: 451.9 [17.79]
Height: 617.0 [24.29]
Depth: 399.3 [15.72]
Weight: 42 kg [93 lb]
Dimensions in mm [in.].
All dimensions include mounting bracket.

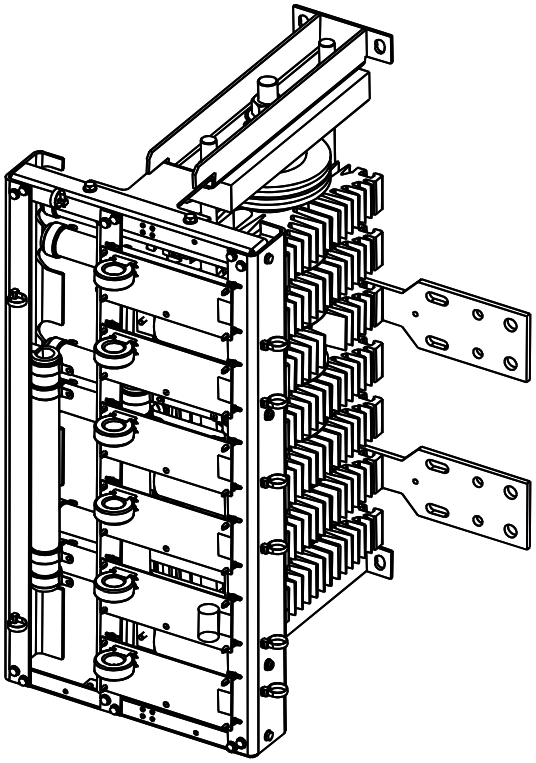

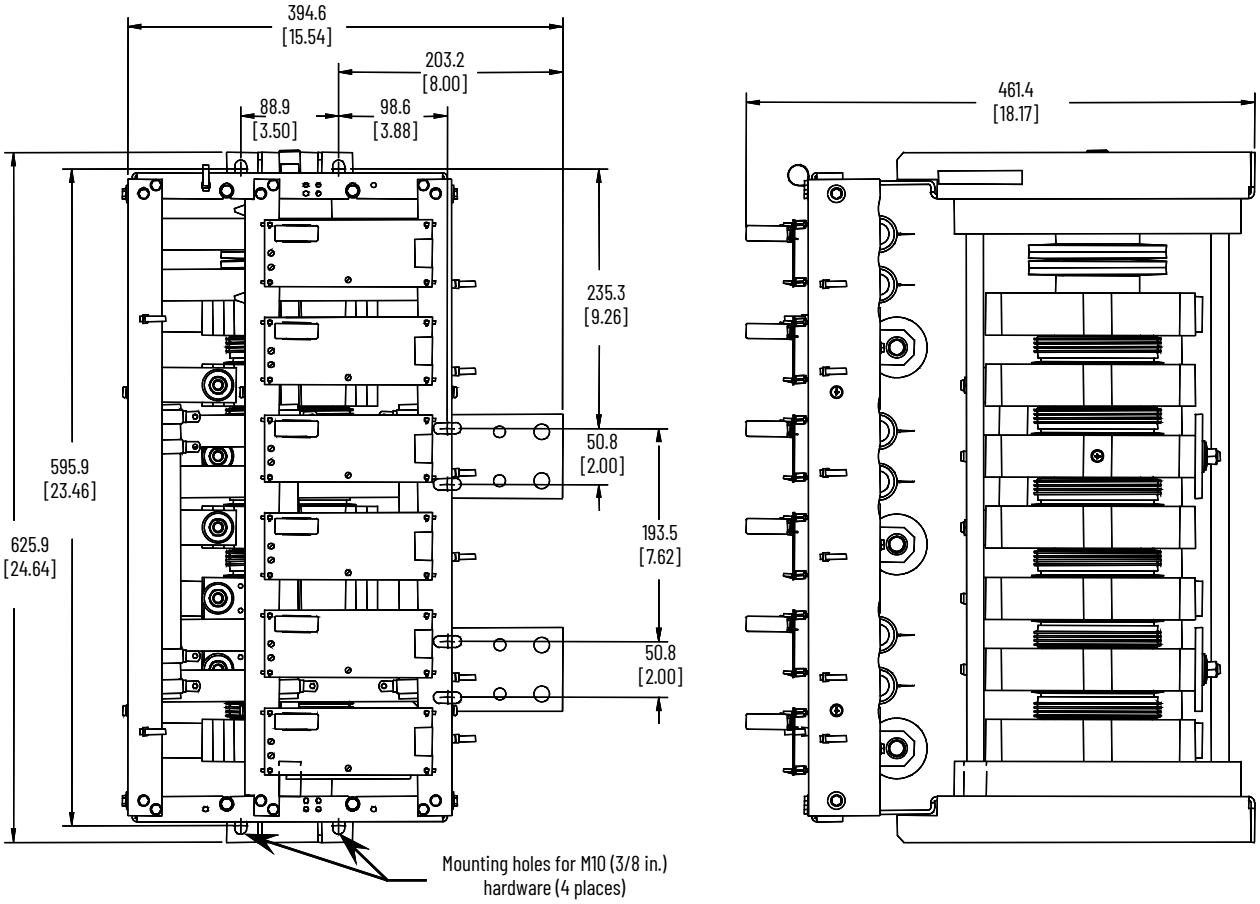

Specifications

Table 25 - Power Stack Specifications

Description	180 A, 360 A, 600 A				
Input Voltages (50/60 Hz)	1000V AC, 3 PH, +10%, -15%(1) 2300V AC, 3 PH, +10%, -15% 3300V AC, 3 PH, +10%, -15% 4160V AC, 3 PH, +10%, -15% 6900V AC, 3 PH, +10%, -15%				
Ambient Temperature	0...40 °C (32...104 °F)(2)				
Power Section (for 3 PH)	6 SCR at 1000/2300V 12 SCR at 4160V 12 SCR at 3300V 18 SCR at 6900V				
Repetitive Peak Inverse Voltage Rating	1000V – 4500 PIV 3300/4160V – 13000 PIV 2400V – 6500 PIV 6900V – 19500 PIV				
Thermal Capacity	600% of FLA, 10 s 450% of FLA, 30 s				
dv/dt Protection	R.C. Snubber Network				
Maximum Heat Dissipation (kW)	Start or Stop Cycle (@ 450% FLA)				Continuous
		180 A	360 A	600 A	
	0...2499V	7	13	22	.25
	2401...4799V	14	26	44	.25
	4800...7200V	21	39	66	.25
Net Shipping Weight (3 PH)	Rating	1000 / 2300 V	3300 / 4160 V	6900 V	
	180A / 360A	105 kg (231 lb)	113 kg (249 lb)	126 kg (278 lb)	
	600 A	132 kg (29 0 lb)	154 kg (339 lb)	170 kg (374 lb)	

(1) 180 A and 360 A ratings only for 1000V power stack.
(2) For other ambient ranges, contact the factory.

SMC-50 Control Module

The SMC-50 control module (1503E-FS1FX) provides microprocessor controlled starting for standard three-phase, squirrel-cage induction motors. The SMC-50 control module provides the following modes of operation as standard.

- Soft start with Selectable kickstart
- Soft stop
- Pump control start/stop
- Torque control
- Current limit start with selectable kickstart
- Sensorless linear speed acceleration with selectable kickstart
- Sensorless linear speed deceleration
- Dual ramp with selectable kickstart
- Emergency run (full voltage)

The SMC-50 control module provides motor protection, including overload, underload, stall, and jam during starting and while the bypass contactor is energized.

See Additional Resources on page 45 for information regarding SMC-50 publications.

Dimensions

SMC-50 Control Module Dimensions

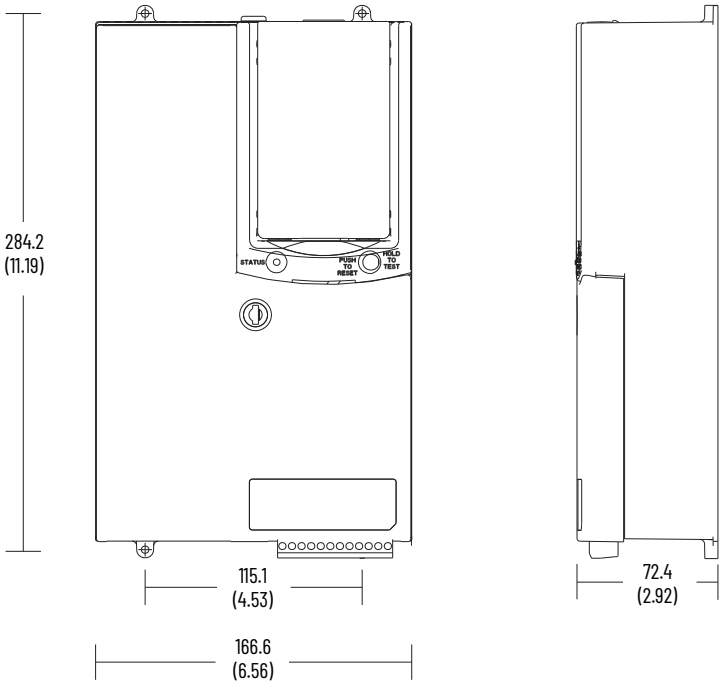

Specifications

Table 26 - SMC-50 Control Module Specifications

Electrical Ratings		**UL/CSA/NEMA**	**IEC**
Control Circuit	Rated Operational Voltage	100...240V AC	100...240V AC
	Rated Insulation Voltage	—	240V
	Rated Impulse Voltage	—	3000V
	Dielectric Withstand	1600V AC	2000V
	Operating Frequency	50/60 Hz	50/60 Hz
	Protection Against Electric Shock	Finger-safe	IP20
Power Requirement	Control Module	75VA	
Auxiliary Contacts (Relay Contacts)	Rated Operational Voltage	20...265V AC, 5...30V DC (resistive)	
	Number of Contacts (Programmable N.O./N.C., held closed electrically)	2 Form A, (3 additional with 150-SM4 option module)	
	Rated Current	3 A @ 120V AC, 1.5 A @ 240V AC	
	Operating Frequency	50/60 Hz	
	Utilization Category	AC-15/B300	
	Make/Break VA	3600/360	
Environmental		**UL/CSA/NEMA**	**IEC**
Operating Temperature Range (Enclosed)		0...40 °C (32...104 °F)	
Storage and Transportation Temperature Range		-20...+75 °C (-4...+167 °F)	
Altitude		2000 m (6500 ft)	
Humidity		5...95%, non-condensing	
Pollution Degree		2	

Interface Board

Converts digital signals from the SMC-50 control module to drive the gate driver boards via fiber-optic cables. The interface board also provides voltage, current, and temperature feedback to the control module.

This component includes mounting instructions.

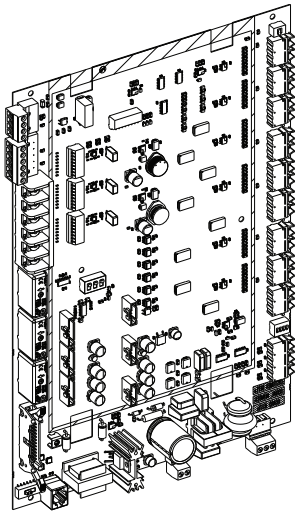

Product Selection

Table 27 - Interface Board Catalog Number

System Voltage	Controller Current Rating	Cat. No.
800...6900V	180 A	1503E-FINTB-2
	360 A	1503E-FINTB-4
	600 A	1503E-FINTB-6

Dimensions

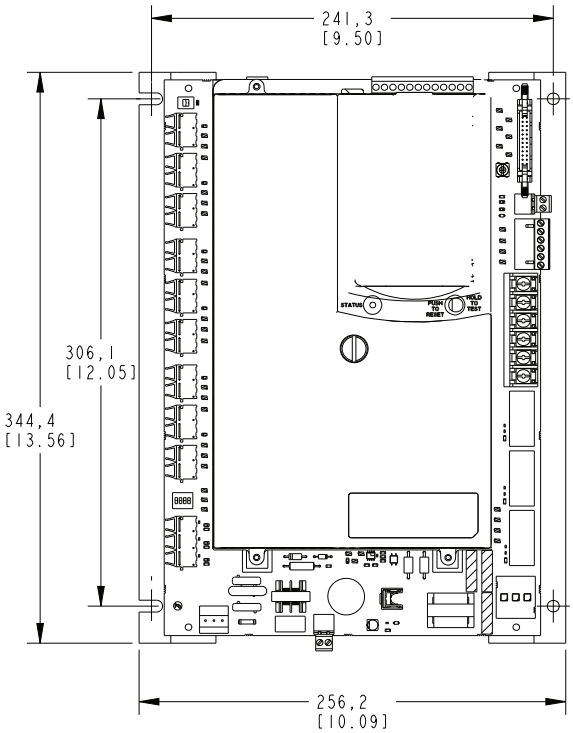

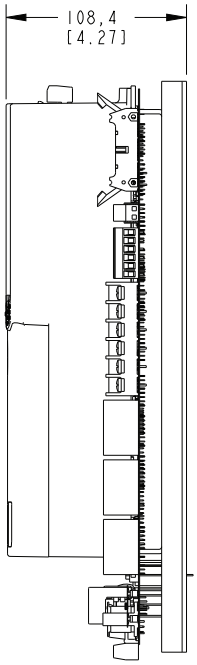

Specifications

Table 28 - Interface Board Specifications

Control Circuit Voltage and Frequency	110/120...220/240V AC, 50/60 Hz
Gate Drive	Via Fiber Optics
SCR Overtemperature	Via Fiber Optics

Voltage Sensing Board

The voltage sensing board steps the voltage down from the system voltage to a voltage level compatible with the SMC-50 control module.

This component includes mounting instructions.

Product Selection

Table 29 - Voltage Sensing Board Product Selection

Description	Line Voltage (3 PH, 50/60 Hz)	Cat. No.
Voltage Sensing Board	800...1500	1503E-VSZ1
	1501...2500	1503E-VSA
	2501...4800	1503E-VSE
	4801...7200	1503E-VSK

Dimensions

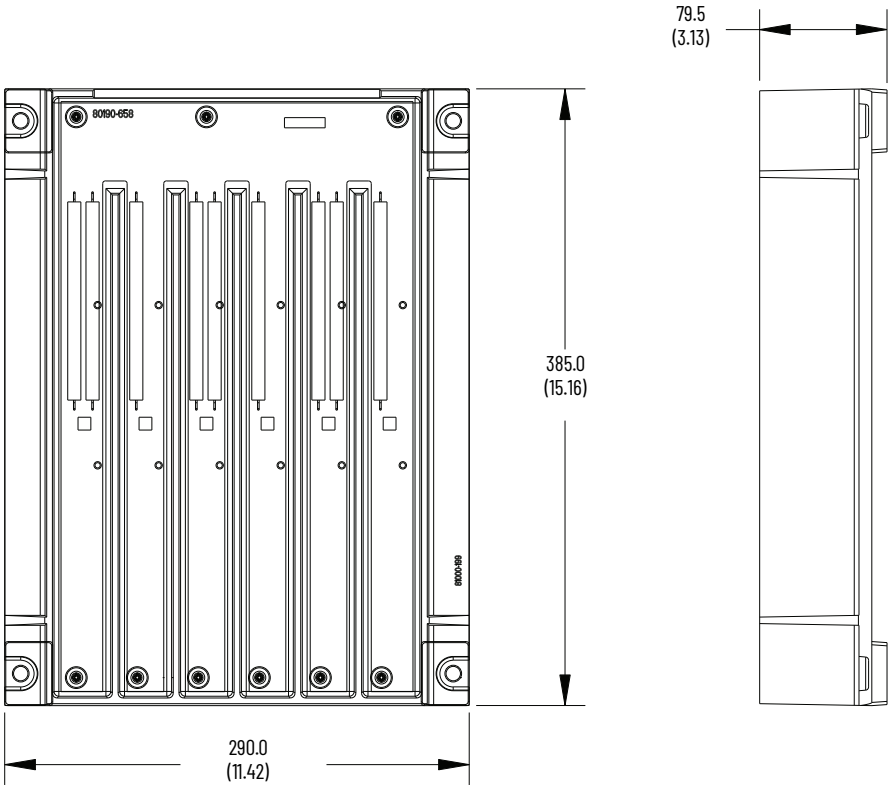

Relay Control Panel

The control panel is available for maximum flexibility. It connects to the Bulletin 1502 vacuum bypass contactor, and the SMC-50 control module. It lets the SMC-50 control module close the contactor once the motor is up-to-speed, and open the contactor under stop control. It is also used to control contactors in a multiple contactor application (autotransformers, reactor starters, etc.) The control panel connects the auxiliary contact on the contactor directly to the terminal blocks.

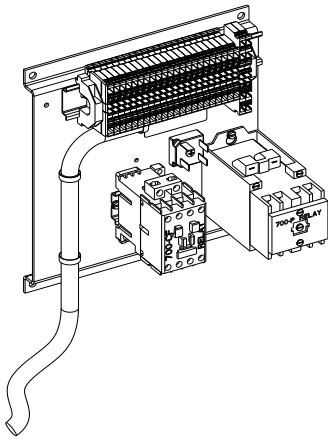

Product Selection

Table 30 - Relay Control Panel Product Selection

Control Panel Options	Cat. No.
Electrically held, 110/120 V AC, 50/60 Hz – 400 A	1503E-CE4D
Electrically held, 220/240 V AC, 50/60 Hz – 400 A	1503E-CE4E
Electrically held, 110/120 V AC, 50/60 Hz – 800 A	1503E-CE8D
Electrically held, 220/240 V AC, 50/60 Hz – 800 A	1503E-CE8E

Dimensions

Relay Control Panel Dimensions

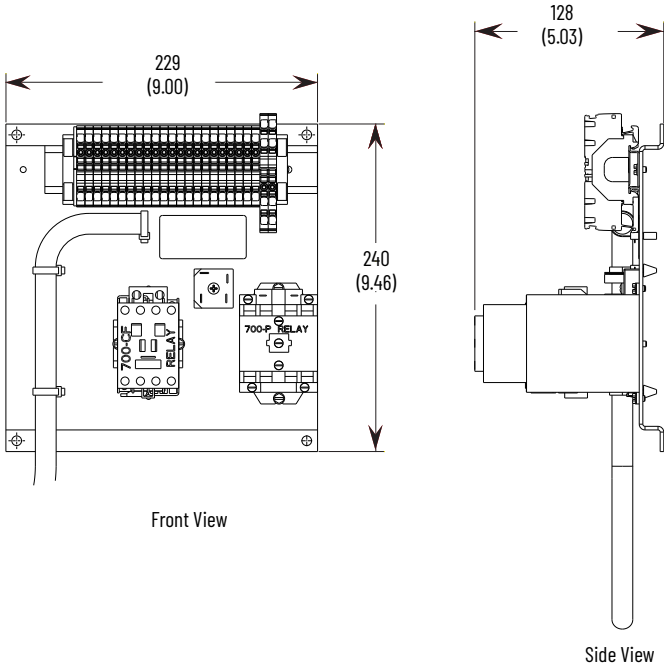

Approximate dimensions in millimeters [inches].

Specifications

Table 31 - Relay Control Panel Specifications

Description	Specification	
Control	110/120V AC, 50/60 Hz	220/240V AC, 50/60 Hz
Cable	3.05 m (10 ft)	3.05 m (10 ft)
Terminal Blocks	Qty 22, 1492-P4	Qty 22, 1492-P4
Wire Gauge	#14 AWG	#14 AWG

Fiber-optic Cables

Fiber-optic cables connect the interface board to gate driver boards mounted on power stacks. They are also used to connect thermistors in the power stacks to interface boards. Two lengths are available to aid the design and manufacture of a new controller, or to retrofit into an existing enclosure.

Fiber-optic cables include mounting instructions.

Product Selection

Length of Cable	Fiber Optics Options	Cat No.
2.5 m (8.2 ft)	800...2300V	1503E-25F06
	3300...4160V	1503E-25F012
	6900V	1503E-25F018
5.0 m (16.4 ft)	800...2300V	1503E-50F06
	3300...4160V	1503E-50F012
	6900V	1503E-50F018

Specifications

Voltage Range	No. of Cables	
	2.5 m (8.2 ft)	5.0 m (16.4 ft)
800...1500V	9	9
2400V	9	9
3300V	15	15
4160V	15	15
6100V	21	21

Gate Driver Test Power Supply

The gate driver test power supply is used to provide power for the gate driver board during commissioning and/or troubleshooting.

Gate driver test power supplies include mounting instructions.

Product Selection

Test Power Supply Options	Cat. No.
120V AC, 60 Hz (with North American style plug)	1503E-PSD
Universal 110...220V AC (requires power cord[1])	1503E-PSU

(1) Not supplied.

Full Load Currents of 3 Phase, 60 Hertz, Medium Voltage AC Induction Motors

This table is FOR REFERENCE ONLY. The full load currents listed below are "average values" for horsepower/kW rated motors. These "average values," along with the similar values listed in NEC/CEC, should be used only as a guide for selecting appropriate components for the Motor Branch Circuit. The rated full load current, shown on the motor nameplate, may vary considerably from the list value depending on the specific motor design.

IMPORTANT The motor nameplate full load current should always be used in determining the rating of the devices used for Motor Running Overcurrent Protection.

Table 32 - Full Load Currents

kW Rating	Horsepower Rating	Full Load Current at 1800 RPM (Amperes)							
		2300V	3300V	4000V	4600V	6000V	6300V	6600V	6900V
75	100	23	16	13	11	9	8	8	8
93	125	29	20	16	14	11	10	10	10
112	150	34	24	20	17	13	13	12	11
131	175	40	28	23	20	15	15	14	13
150	200	46	32	26	23	18	17	16	15
168	225	52	36	30	26	20	19	18	17
187	250	57	40	33	29	22	21	20	19
224	300	68	48	39	34	26	25	24	23
261	350	80	56	46	40	31	29	28	27
298	400	91	64	52	46	35	33	32	30
336	450	103	72	59	51	39	38	36	34
373	500	113	79	65	57	43	41	39	38
448	600	134	94	77	67	52	49	47	45
522	700	158	110	91	79	60	58	55	53
560	750	169	118	97	85	65	62	59	56
597	800	177	124	102	89	68	65	62	59
671	900	202	141	116	101	77	74	70	67
746	1000	216	151	124	108	83	79	75	72
932	1250	273	190	157	137	105	100	95	91
1120	1500	326	227	188	163	125	119	114	109
1305	1750	376	262	216	188	144	137	131	125
1492	2000	434	303	250	217	166	159	151	145
1679	2250	485	338	279	242	186	177	169	162
1865	2500	537	375	309	269	206	196	187	179
2052	2750	591	412	340	296	227	216	206	197
2238	3000	647	451	372	324	248	236	226	216
2611	3500	750	523	431	375	288	274	261	250
2984	4000	857	597	493	429	329	313	299	286
3357	4500	964	672	554	482	370	352	336	321
3730	5000	1071	747	616	536	411	391	373	357
4103	5500	1179	821	678	589	452	430	411	393
4476	6000	1286	896	739	643	493	469	448	429
5222	7000	1500	1046	863	750	575	548	523	500
5968	8000	1714	1195	986	857	657	626	597	571
6714	9000	1929	1344	1109	964	739	704	672	643
7460	10000	2143	1494	1232	1071	821	782	747	714

Notes:

Additional Resources

These documents contain additional information concerning related products from Rockwell Automation. You can view or download publications at rok.auto/literature.

Resource	Description
OEM Starter Frame and Components (400 A, 2400...7200V), publication 1503-IN050	Provides information on installation, commissioning, maintenance and spare parts for 400 A frame
OEM Starter Frame and Components (600 A, 2400...7200V), publication 1503-IN055	Provides information on installation, commissioning, maintenance and spare parts for 600 A frame
IntelliVAC Contactor Control Module, publication 1503-UM053	Provides information on installing, setup, commissioning, monitoring, and troubleshooting the IntelliVAC control module.
Medium Voltage 450A Contactor - Series G, publication 1502-UM060	Provides information around receiving and handling, installing, maintaining, and troubleshooting.
Medium Voltage Contactor 800 A, 2400...7200V (Series F), publication 1502-UM054	Provides information around receiving and handling, installing, maintaining, and troubleshooting.
CENTERLINE Medium Voltage SMC Motor Controller Technical Data, publication 1560F-TD001	Provides specification information for medium voltage smart motor controllers
MV SMC-50 OEM Components Installation Instructions, 1503E-IN001	Provides information on installing SMC-50 OEM components
MV SMC-50 OEM Components Interface Board, 1503E-IN010	Provides information on handling, identifying, and storing the Interface Board
MV SMC-50 OEM Components SMC-50 Control Module, 1503E-IN011	Provides information on handling, identifying, and storing the SMC-50 control module
Industrial Automation Wiring and Grounding Guidelines, publication 1770-4.1	Provides general guidelines for installing a Rockwell Automation industrial system.
EtherNet/IP Network Devices User Manual, ENET-UM006	Describes how to configure and use EtherNet/IP devices to communicate on the EtherNet/IP network.
Ethernet Reference Manual, ENET-RM002	Describes basic Ethernet concepts, infrastructure components, and infrastructure features.
System Security Design Guidelines Reference Manual, SECURE-RM001	Provides guidance on how to conduct security assessments, implement Rockwell Automation products in a secure system, harden the control system, manage user access, and dispose of equipment.
UL Standards Listing for Industrial Control Products, publication CMPNTS-SR002	Assists original equipment manufacturers (OEMs) with construction of panels, to help ensure that they conform to the requirements of Underwriters Laboratories.
American Standards, Configurations, and Ratings: Introduction to Motor Circuit Design, publication IC-AT001	Provides an overview of American motor circuit design based on methods that are outlined in the NEC.
Industrial Components Preventive Maintenance, Enclosures, and Contact Ratings Specifications, publication IC-TD002	Provides a quick reference tool for Allen-Bradley industrial automation controls and assemblies.
Safety Guidelines for the Application, Installation, and Maintenance of Solid-state Control, publication SGI-1.1	Designed to harmonize with NEMA Standards Publication No. ICS 1.1-1987 and provides general guidelines for the application, installation, and maintenance of solid-state control in the form of individual devices or packaged assemblies incorporating solid-state components.
Industrial Automation Wiring and Grounding Guidelines, publication 1770-4.1	Provides general guidelines for installing a Rockwell Automation industrial system.
Product Certifications website, rok.auto/certifications.	Provides declarations of conformity, certificates, and other certification details.

Rockwell Automation Support

Use these resources to access support information.

Technical Support Center	Find help with how-to videos, FAQs, chat, user forums, Knowledgebase, and product notification updates.	rok.auto/support
Local Technical Support Phone Numbers	Locate the telephone number for your country.	rok.auto/phonesupport
Technical Documentation Center	Quickly access and download technical specifications, installation instructions, and user manuals.	rok.auto/techdocs
Literature Library	Find installation instructions, manuals, brochures, and technical data publications.	rok.auto/literature
Product Compatibility and Download Center (PCDC)	Download firmware, associated files (such as AOP, EDS, and DTM), and access product release notes.	rok.auto/pcdc

Documentation Feedback

Your comments help us serve your documentation needs better. If you have any suggestions on how to improve our content, complete the form at rok.auto/docfeedback.

Allen-Bradley, expanding human possibility, Rockwell Automation, and SMC-50 are trademarks of Rockwell Automation, Inc.
EtherNet/IP is a trademark of ODVA, Inc.
Trademarks not belonging to Rockwell Automation are property of their respective companies.

Rockwell Automation maintains current product environmental compliance information on its website at rok.auto/pec.

Rockwell Otomasyon Ticaret A.Ş. Kar Plaza İş Merkezi E Blok Kat:6 34752, İçerenköy, İstanbul, Tel: +90 (216) 5698400 EEE Yönetmeliğine Uygundur

Connect with us.

rockwellautomation.com — expanding **human possibility**®

AMERICAS: Rockwell Automation, 1201 South Second Street, Milwaukee, WI 53204-2496 USA, Tel: (1) 414.382.2000, Fax: (1) 414.382.4444
EUROPE/MIDDLE EAST/AFRICA: Rockwell Automation NV, Pegasus Park, De Kleetlaan 12a, 1831 Diegem, Belgium, Tel: (32) 2 663 0600, Fax: (32) 2 663 0640
ASIA PACIFIC: Rockwell Automation, Level 14, Core F, Cyberport 3, 100 Cyberport Road, Hong Kong, Tel: (852) 2887 4788, Fax: (852) 2508 1846
UNITED KINGDOM: Rockwell Automation Ltd. Pitfield, Kiln Farm Milton Keynes, MK11 3DR, United Kingdom, Tel: (44)(1908) 838-800, Fax: (44)(1908) 261-917

Publication 1503E-TD001C-EN-P - November 2022
Supersedes Publication 1503E-TD001B-EN-P - November 2020

Copyright © 2022 Rockwell Automation, Inc. All rights reserved. Printed in the U.S.A.