User Manual

Allen-Bradley

ArmorStart Distributed Motor Controller

Catalog Numbers 280, 281, 284

Allen-Bradley • Rockwell Software

Rockwell Automation

Important User Information

Read this document and the documents listed in the additional resources section about installation, configuration, and operation of this equipment before you install, configure, operate, or maintain this product. Users are required to familiarize themselves with installation and wiring instructions in addition to requirements of all applicable codes, laws, and standards.

Activities including installation, adjustments, putting into service, use, assembly, disassembly, and maintenance are required to be carried out by suitably trained personnel in accordance with applicable code of practice.

If this equipment is used in a manner not specified by the manufacturer, the protection provided by the equipment may be impaired.

In no event will Rockwell Automation, Inc. be responsible or liable for indirect or consequential damages resulting from the use or application of this equipment.

The examples and diagrams in this manual are included solely for illustrative purposes. Because of the many variables and requirements associated with any particular installation, Rockwell Automation, Inc. cannot assume responsibility or liability for actual use based on the examples and diagrams.

No patent liability is assumed by Rockwell Automation, Inc. with respect to use of information, circuits, equipment, or software described in this manual.

Reproduction of the contents of this manual, in whole or in part, without written permission of Rockwell Automation, Inc., is prohibited.

Throughout this manual, when necessary, we use notes to make you aware of safety considerations.

	WARNING: Identifies information about practices or circumstances that can cause an explosion in a hazardous environment, which may lead to personal injury or death, property damage, or economic loss.
	ATTENTION: Identifies information about practices or circumstances that can lead to personal injury or death, property damage, or economic loss. Attentions help you identify a hazard, avoid a hazard, and recognize the consequence.
IMPORTANT	Identifies information that is critical for successful application and understanding of the product.

Labels may also be on or inside the equipment to provide specific precautions.

	SHOCK HAZARD: Labels may be on or inside the equipment, for example, a drive or motor, to alert people that dangerous voltage may be present.
	BURN HAZARD: Labels may be on or inside the equipment, for example, a drive or motor, to alert people that surfaces may reach dangerous temperatures.
	ARC FLASH HAZARD: Labels may be on or inside the equipment, for example, a motor control center, to alert people to potential Arc Flash. Arc Flash will cause severe injury or death. Wear proper Personal Protective Equipment (PPE). Follow ALL Regulatory requirements for safe work practices and for Personal Protective Equipment (PPE).

Trademark List

Allen-Bradley, ArmorConnect, ArmorPOINT, ArmorStart, ControlLogix, DeviceLogix, On-Machine, PowerFlex, RSLogix 5000, RSNetWorx, SLC, and StepLogic are trademarks of Rockwell Automation, Inc.
Trademarks not belonging to Rockwell Automation are property of their respective companies.

European Communities (EC) Directive Compliance

If this product has the CE mark it is approved for installation within the European Union and EEA regions. It has been designed and tested to meet the following directives.

Low Voltage and EMC Directives

This product is tested to meet Council Directive 73/23/EEC Low Voltage and 89/336/EEC and Council Directive 89/336/EC Electromagnetic Compatibility (EMC) by applying the following standard(s):

- Bulletin 280, 281: EN 60947-4-1 — Low-voltage switchgear and controlgear — Part 4-1: Contactors and motor-starters — Electromechanical contactors and motor-starters.
- Bulletin 284: EN 61800-3 — Adjustable speed electronic power drive systems — Part 3: EMC product standard including specific test methods.

This product is intended for use in an industrial environment.

Notes

European Communities (EC) Directive Compliance 3
Low Voltage and EMC Directives 3

Chapter 1

Product Overview

Introduction 15
Description 15
Catalog Number Explanation 16
Operation 19
Mode of Operation 19
Bulletin 280, 281 19
Bulletin 284 20
Description of Features 21
Overload Protection 21
LED Status Indication 22
Fault Diagnostics 23
Inputs 23
Outputs 23
Gland Plate Entrance 23
Motor Cable 24
ArmorStart with DeviceNet Network Capabilities 24
DeviceLogix 24
Peer-to-peer Communications (ZIP) 24
Factory Installed Options 24
Optional Safety Monitor 24
Optional HOA Keypad Configuration (Bulletin 280, 281 only) . . 25
Optional HOA Selector Keypad with Jog Function (Bulletin 284 only) 25
Source Brake Contactor (Bulletin 284 only) 25
EMI Filter (Bulletin 284 only) 25
Dynamic Brake (Bulletin 284 only) 26
Dynamic Brake Resistor (Bulletin 284 only) 26
Control Brake Contactor (Bulletin 284 only) 26
Output Contactor (Bulletin 284 only) 26
Shielded Motor Cable (Bulletin 284 only) 26
0...10V Analog Input (Bulletin 284 only) 27

Chapter 2

Installation, Wiring, and Maintenance

Receiving 29
Unpacking 29
Inspecting 29
Storing 29
General Precautions 30
Precautions for Bulletin 284 Applications 30
Dimensions for Bulletin 280, 281 31
IP67/Type 4/12 with Conduit Entrance 31

IP67/Type 4/12 with ArmorConnect Connectivity 33
Dimensions for Bulletin 284 35
Mount Orientation. 41
Operation 41
Wiring 41
Power, Control, Safety Monitor Inputs, and Ground Wiring 41
Standard Conduit/Knockout Size. 42
Terminal Designations. 42
Optional Locking Clip. 44
ArmorConnect Power Media. 45
Description 45
On-Machine Hard-wired Stop Category 0 Station. 48
E-Stop Circuit 48
ArmorStart with ArmorConnect Connectivity. 50
Installing ArmorConnect Power Media using CordSets. 51
ArmorConnect Cable Ratings 52
Branch Circuit Protection Requirements for ArmorConnect Three-Phase Power Media 52
AC Supply Considerations for Bulletin 284 units 52
Ungrounded and High Resistive Distribution Systems 52
Disconnecting MOVs. 52
Group Motor Installations for USA and Canada Markets. 54
Wiring and Workmanship Guidelines 54
DeviceNet Network Installation. 55
Other DeviceNet System Design Considerations 55
Electromagnetic Compatibility 55
General Notes (Bulletin 284 only) 55
Grounding. 56
Motor Cable Considerations 56
Unshielded Cable. 57
Shielded Cable 57
Recommended Cable Connectors/Glands 58
Recommended Cord Grips 58
Shield Terminating Connectors. 58
Wiring 59
Maintenance. 59

Bulletin 280, 281 Programmable Parameters

Chapter 3

Introduction. 61
Parameter Programming 61
Parameter Group Listing. 62
DeviceLogix Group. 62
DeviceNet Group 69
Starter Protection Group. 73
User I/O 77
Misc. Group 81
ZIP Parameters. 83

Starter Display 91
Starter Setup 93

Chapter 4

Bulletin 284 Programmable Parameters for Volts per Hertz Controllers

Parameter Programming 95
Parameter Group Listing 95
DeviceLogix Group 97
DeviceNet Group 102
Starter Protection Group 106
User I/O Group 110
Miscellaneous Group 113
Drive DeviceNet Group 115
ZIP Parameters 117
Display Group 123
Basic Program Group 126
Advanced Program Group 129
Clear a Type 1 Fault and Restart the Drive 136
Clear an Overvoltage, Undervoltage, or Heatsink OvrTmp Fault without Restarting the Drive 136

Chapter 5

Bulletin 284 Programmable Parameters for Sensorless Vector Controllers

Parameter Programming 141
Parameter Group Listing 141
DeviceLogix Group 143
DeviceNet Group 148
Starter Protection Group 152
User I/O Group 156
Miscellaneous Group 159
Drive DeviceNet Group 161
Display Group 162
Basic Program Group 167
Advanced Program Group 170
Clear a Type 1 Fault and Restart the Drive 181
Clear an Overvoltage, Undervoltage, or Heatsink OvrTmp Fault without Restarting the Drive 181

Chapter 6

HOA Keypad Operation

Introduction 193
Keypad Description 193
Keypad Disable and HOA via Parameter Modification 196

Chapter 7

DeviceNet Commissioning

Establishing a DeviceNet Node Address 197
Node Commissioning using Hardware 197
Node Commissioning using Software 198

Building and Registering an EDS File 199
Using the Node Commissioning Tool Inside RSNetWorx for DeviceNet 201
System Configuration 202
Using Automap feature with default Input and Output (I/O) Assemblies 203
Default Input and Output (I/O) Assembly Formats 203
Setting the Motor FLA and Overload Trip Class (Bulletin 280, 281) . . 204
Setting the Motor FLA (Bulletin 284) 205

Chapter 8

Explicit Messaging on DeviceNet

Logic Controller Application Example with Explicit Messaging 207
Programming the 1747-SLC 208
I/O Mapping 208
Explicit Messaging with SLC 209
Setting up the Data File 210
Sequence of Events 210
Programming the 1756-ControlLogix 214
I/O Mapping 214
Explicit Messaging with ControlLogix 215
Setting Up the MSG Instruction 215

Chapter 9

Using DeviceLogix

Description 219
DeviceLogix Programming 220
DeviceLogix Function Block Editor Example 220
ArmorStart Motion and Keypad Disable with DeviceLogix 223
DeviceLogix Ladder Editor Example 223
ArmorStart 280 and 281 Status Bits 224
Bulletin 280 and 281 ArmorStart Fault Bits 225
Bulletin 280 and 281 ArmorStart Outputs 226
Bulletin 280 and 281 ArmorStart Produced Network Bits 227
Bulletin 284 ArmorStart Status Bits 228
Bulletin 284 ArmorStart Fault Bits 229
Bulletin 284 ArmorStart Outputs 230
Bulletin 284 ArmorStart Produced Network Bits 231

Chapter 10

ArmorStart ZIP Configuration

Overview 233
ZIP Parameter Overview 233
Data Production 235
Data Consumption 235
Mapping Consumed Data to the DeviceLogix Data Table 236
ZIP Example 238
Finding ZIP bits in the DeviceLogix Editor 244

Chapter 11

Diagnostics

Overview 245
Protection Programming 245
Fault Display 245
Clear Fault 246
Fault Codes 246
Fault Definitions 246
Short Circuit 246
Overload Trip 247
Phase Loss 247
Phase Short 247
Shorted SCR 247
Ground Fault 247
Stall 247
Control Power 247
I/O Fault 248
Over Temperature 248
Phase Imbalance 248
Over Current 248
DeviceNet Power Loss 248
Internal Communication Fault 248
DC Bus Fault 248
EEPROM Fault 249
Hardware Fault 249
Restart Retries 249
Miscellaneous Faults 249

Chapter 12

Troubleshooting

Introduction 251
Bulletin 280, 281 Troubleshooting 252
Bulletin 284 Troubleshooting 254
Fault Definitions 254
Fault 11 Detail 256
Internal Drive Faults 257
DeviceNet Troubleshooting Procedures 261
IP67 Dynamic Brake Diagnostic (DB1) 261
DB1 Faults 262
Operation and Troubleshooting of the DB1 - Dynamic Brake . . . 262
DB1 Resistor Overtemperature Fault 263
DB1 Overcurrent Fault 263
DB1 Undercurrent Fault 263
DB1 Switch Fault 264
DB1 Open Fault 264
DB1 VBus Link Fault 265
DB1 Comm Fault 265
DB1 Thermal Warning 265

Reading the Control Supervisor Object 265
Hardware Fault - Fan RPM Warning 266
FAN Fault Handling with Firmware 66.21 of 284 266
Operation 266
Annunciation using PLC Logic 266
Control Module Replacement (Bulletin 280, 281) 267
Removal of Starter Module 267
Installation of Control Module 267
Control Module Replacement (Bulletin 284) 268
Removal of Control Module 268
Installation of Control Module 269
Base Module Replacement (Bulletin 280, 281) 270
Removal of Base Module 270
Installation of Base Module 271
Base Module Replacement (Bulletin 284) 272
Removal of Base Module 272
Installation of Base Module 273
Fuse Replacement 274

Appendix A

Specifications

Bulletin 280, 281 277
Contactor Life Load Curves 283
Bulletin 284 285
IP Dynamic Brake Resistor Ratings 290
Overload Curves 292

Appendix B

Bulletin 280, 281 CIP Information

Electronic Data Sheets 293
DOL Type Product Codes and Name Strings 293
DOL Reversing Type Product Codes and Name String 294
DeviceNet Objects 295
Identity Object — CLASS CODE 0x0001 295
Identity Objects 295
Message Router — CLASS CODE 0x0002 296
DeviceNet Object — CLASS CODE 0x0003 297
Assembly Object — CLASS CODE 0x0004 298
Custom Parameter Based “Word-wise” I/O Assemblies 298
“Word-wise” Bit-Packed Assemblies 288
Standard Distributed Motor Controller I/O Assemblies 300
Standard Distributed Motor Controller Output (Consumed) Assemblies 300
Standard Distributed Motor Controller Input (Produced) Assemblies 301
Connection Object — CLASS CODE 0x0005 302
Discrete Input Point Object — CLASS CODE 0x0008 306
Discrete Output Point Object — CLASS CODE 0x0009 307

Discrete Output Point Object Special Requirements 308
DOP Instances 3 and 4 Special Behavior. 308
DOP Instances 1 and 2 Special Behavior. 309
Parameter Object — CLASS CODE 0x000F. 312
Parameter Group Object — CLASS CODE 0x0010 313
Discrete Input Group Object —CLASS CODE 0x001D. 314
Discrete Output Group Object — CLASS CODE 0x001E. 314
Control Supervisor Object —CLASS CODE 0x0029. 315
Acknowledge Handler Object — CLASS CODE 0x002b 316
Overload Object — CLASS CODE 0x002c. 317
DeviceNet Interface Object — CLASS CODE 0x00B4 318
ZIP Object 319
CLASS CODE 0x032E. 319
ZIP Enable. 319
Attribute Symantics 321
Behavior. 324

Appendix C

Bulletin 284 CIP Information

Electronic Data Sheets. 325
VFD Type Product Codes and Name Strings. 325
DeviceNet Objects 327
Identity Object — CLASS CODE 0x0001 327
Identity Object. 328
Message Router — CLASS CODE 0x0002. 328
DeviceNet Object — CLASS CODE 0x0003. 329
Assembly Object — CLASS CODE 0x0004. 329
Custom Parameter-Based Word-Wise I/O Assembly. 330
Word-Wise Bit-Packed Assemblies 331
Standard Distributed Motor Controller I/O Assemblies. 332
Standard Distributed Motor Controller Output (Consumed) Assemblies 332
Standard Distributed Motor Controller Input (Produced) Assemblies 334
Inverter Type Distributed Motor Controller Input (Produced) Assemblies 334
Connection Object — CLASS CODE 0x0005 337
Discrete Input Point Object — CLASS CODE 0x0008 341
Discrete Output Point Object — CLASS CODE 0x0009 341
Parameter Object — CLASS CODE 0x000F 347
Parameter Group Object — CLASS CODE 0x0010 348
Discrete Input Group Object — CLASS CODE 0x001D. 349
Discrete Output Group Object — CLASS CODE 0x001E 350
Control Supervisor Object — CLASS CODE 0x0029. 351
Acknowledge Handler Object — CLASS CODE 0x002b. 353
DeviceNet Interface Object — CLASS CODE 0x00B4 354

Appendix D

Group Motor Installations

Application of ArmorStart Controllers in Group Installation 355

Appendix E

24V DC Control Design Considerations

ArmorStart DC Control Voltage Application Information 361
Example 1 – Conveyor Line Configuration 362
Example 2..... 363
24V DC Power Supply Capacity Sizing..... 363
System Design Considerations When Using 16 AWG Control Wiring 364
Other System Design Considerations 364

Appendix F

System Design Considerations When Using a Line Reactor

General Rule..... 365
Reasons to Use 365
Theory..... 365
ArmorStart Design 366

Appendix G

Examples

Reporting Examples 367
How to Report the RPM of the 284 Internal Fan..... 367
How to report the Heat Sink Temperature of the 284 367
Application Examples..... 367
284 - VFD Preset Speed Example 367
Retrieve the Fault Buffer 371
CIP Class 0x00F5 Address Conflict Detection..... 371
Demand Off Torque Considerations..... 371
Keypad Disable with DeviceLogix 372
Motion Disable 372
Manual Brake Control for ArmorStart via DeviceLogix..... 373

Appendix H

Accessories

DeviceNet Media..... 379
Sensor Media 380

Appendix I

Renewal Parts

Bulletin 280, 281 383
Part Catalog Structure 383
Control Module Renewal Part Product Selection..... 383
Bulletin 280..... 384
Part Catalog Structure 384
Base Module Renewal Part Product Selection 384
Bulletin 284, Control Module..... 385
Part Catalog Structure 385

Base Module Renewal Part Product Selection 385
Bulletin 284, Base Module 387
Part Catalog Structure 387
Base Module Renewal Part Product Selection 387

Product Overview

Introduction

This chapter provides a brief overview of the features and functionality of the Bulletin 280, 281, and 284 ArmorStart® distributed motor controllers.

Description

ArmorStart distributed motor controllers offer a simple, cost-effective method of integrating combination starters, I/O, and network capabilities in your On-Machine™ architecture. The product line includes solutions for DeviceNet, DeviceNet Safety, and EtherNet/IP.

ArmorStart distributed motor controllers are integrated, pre-engineered, starters with Bulletin 280 for full-voltage, Bulletin 281 for reversing applications, and Bulletin 284 for variable frequency AC drive applications. The ArmorStart distributed motor controller offers a robust IP67/Type 4/12 enclosure design, which is suitable for water wash down environments.

The modular "plug and play" design offers simplicity in wiring the installation. The quick disconnects for I/O, communications, and motor connections reduce the wiring time and diminish wiring errors. The ArmorStart distributed motor controller offers, as standard, four direct current (DC) inputs and two relay outputs, to be used with sensors and actuators respectively, for monitoring and controlling the application process. The ArmorStart distributed motor controller with its light-emitting diode (LED) status indication and built-in diagnostics capabilities allow ease of maintenance and troubleshooting. The optional Hand/Off/Auto (HOA) keypad configuration allows local start/stop control at the ArmorStart distributed motor controller.

The ArmorStart distributed motor controller offers short circuit protection per UL508 and IEC 60947. The ArmorStart distributed motor controller is rated for local-disconnect service by incorporating the Bulletin 140M Motor Circuit Protector as the local-disconnect, eliminating the need for additional components. The ArmorStart distributed motor controllers are suitable for group motor installations

Catalog Number Explanation

Examples given in this section are for reference purposes. This basic explanation should not be used for product selection because not all combinations will produce a valid catalog number.

Figure 1 - Catalog Number Explanation for 280D, 281D

280	D	–	F	12Z	–	10	C	–	CR	–	Option 1	–	Option 2
a	*b*		*c*	*d*		*e*	*f*		*g*		*h*		*i*

a

Bulletin Number	
Code	Description
280	Full Voltage Starter
281	Reversing Starter

b

Code	Description
D	DeviceNet

c

Enclosure Type	
Code	Description
F	IP67/ UL Type 4/12

d

Contactor Size/Control Voltage		
24V DC	120V AC	240V AC
12Z	12D	12B
23Z	23D	23B

e

Short Circuit Protection (Motor Circuit Protection)	
Code	Description
10	10 A Rated Device
25	25 A Rated Device

f

Overload Selection Current Range	
Code	Description
A	0.24…1.2 A
B	0.5…2.5 A
C	1.1…5.5 A
D	3.2…16 A

h

Option 1	
Code	**Description**
3	Hand/Off/Auto Selector Keypad
3FR	Hand/Off/Auto Selector Keypad with Forward/Reverse

i

Option 2	
Code	**Description**
SM	Safety Monitor

g

Control and 3-Phase Power Connections/Motor Cable Connection (CR: Conduit/Round Media) or (RR: Round/Round Media) or (DR: D/Round Media)				
Code		Description		
		Control Power	3-Phase Power	Motor Cable
CR	blank	Conduit Entrance	Conduit Entrance	3 m, unshielded cordset male 90°
CR	W	Conduit Entrance	Conduit Entrance	No cable
DR	blank	Conduit Daisy Chain	Conduit Daisy Chain	3 m, unshielded cordset male 90°
DR	W	Conduit Daisy Chain	Conduit Daisy Chain	No cable
RR	blank	Round Media (Male Receptacle)	Round Media (Male Receptacle)	3 m, unshielded cordset male 90°
RR	W	Round Media (Male Receptacle)	Round Media (Male Receptacle)	No cable

Figure 2 - Catalog Number Explanation for 284D Sensorless Vector Performance Volts per Hertz)

284	D	–	F	H	D2P3	D	–	10	–	CR	–	Option 1	–	Option 2	–	Option 3
a	*b*		*c*	*d*	*e*	*f*		*g*		*h*		*i*		*j*		*k*

a

Bulletin Number	
Code	Description
284	VFD Starter

b

Communications	
Code	Description
D	DeviceNet

c

Enclosure Type	
Code	Description
F	Type 4 (IP67)

d

Torque Performance Mode	
Code	Description
H	Volts per Hertz (Sensorless Vector Performance)

e

Output Current			
200…240V		380…480V	
Code	Description	Code	Description
B2P3	2.3 A, 0.4 kW, 0.5 Hp	D1P4	1.4 A, 0.4 kW, 0.5 Hp
B4P5	4.5 A, 0.75 kW, 1.0 Hp	D2P3	2.3 A, 0.75 kW, 1.0 Hp
B7P6	7.6 A, 1.5 kW, 2.0 Hp	D4P0	4.0 A, 1.5 kW, 2.0 Hp
		D6P0	6.0 A, 2.2 kW, 3.0 Hp
		D7P6	7.6 A, 3.3 kW, 5.0 Hp

f

Control Voltage	
Code	Description
Z	24V DC
D	120V DC
B	240V DC

g

Short Circuit Protection (Motor Circuit Protector)	
Code	Description
10	10 A Rated Device
25	25 A Rated Device

h

Control and 3-Phase Power Connections / Motor Cable Connection (CR: Conduit/Round Media) or (RR: Round/Round Media)				
Code		Description		
		Control Power	3-Phase Power	Motor Cable
CR	blank	Conduit Entrance	Conduit Entrance	3 m, unshielded cordset male 90°
CR	N	Conduit Entrance	Conduit Entrance	3 m, shielded cordset male 90°
CR	W	Conduit Entrance	Conduit Entrance	No cable
DR	blank	Conduit Daisy Chain	Conduit Daisy Chain	3 m, unshielded cordset male 90°
DR	N	Conduit Daisy Chain	Conduit Daisy Chain	3 m, shielded cordset male 90°
DR	W	Conduit Daisy Chain	Conduit Daisy Chain	No cable
RR	blank	Round Media (Male Receptacle)	Round Media (Male Receptacle)	3 m, unshielded cordset male 90°
RR	N	Round Media (Male Receptacle)	Round Media (Male Receptacle)	3 m, shielded cordset male 90°
RR	W	Round Media (Male Receptacle)	Round Media (Male Receptacle)	No cable

i

Option 1	
Code	Description
3	Hand/Off/Auto Selector Keypad with Jog Function

j

Option 2		
Code		Description
CB	blank	Control Brake Contactor
CB	W	No cable
DB	blank	DB Brake Connector
DB1	blank	Connectivity to IP67 DB Resistor
SB	blank	Source Brake Contactor
SB	W	No cable

k

Option 3	
Code	Description
OC	Output Contactor
SM	Safety Monitor

Figure 3 - Catalog Number Explanation for 284D Sensorless Vector Control

284	D	–	F	V	D2P3	D	–	10	–	CR	–	Option 1	–	Option 2	–	Option 3
a	*b*		*c*	*d*	*e*	*f*		*g*		*h*		*i*		*j*		*k*

a

Bulletin Number	
Code	Description
284	VFD Starter

b

Communications	
Code	Description
D	DeviceNet

c

Enclosure Type	
Code	Description
F	Type 4 (IP67)

d

Torque Performance Mode	
Code	Description
V	Sensorless Vector Control and Volts per Hertz
H	Volts per Hertz (Sensorless Vector Performance)

e

Output Current			
200…240V		380…480V	
Code	Description	Code	Description
B2P3	2.3 A, 0.4 kW, 0.5 Hp	D1P4	1.4 A, 0.4 kW, 0.5 Hp
B5P0	5.0 A, 0.75 kW, 1.0 Hp	D2P3	2.3 A, 0.75 kW, 1.0 Hp
B7P6	7.6 A, 1.5 kW, 2.0 Hp	D4P0	4.0 A, 1.5 kW, 2.0 Hp
		D6P0	6.0 A, 2.2 kW, 3.0 Hp
		D7P6	7.6 A, 3.3 kW, 5.0 Hp

f

Control Voltage	
Code	Description
Z	24V DC
D	120V DC
B	240V DC

g

Short Circuit Protection (Motor Circuit Protector)	
Code	Description
10	10 A Rated Device
25	25 A Rated Device

h

Control and 3-Phase Power Connections / Motor Cable Connection (CR: Conduit/Round Media) or (RR: Round/Round Media)				
Code		Description		
		Control Power	3-Phase Power	Motor Cable
CR	blank	Conduit Entrance	Conduit Entrance	3 m, unshielded cordset male 90°
CR	N	Conduit Entrance	Conduit Entrance	3 m, shielded cordset male 90°
CR	W	Conduit Entrance	Conduit Entrance	No cable
DR	blank	Conduit Daisy Chain	Conduit Daisy Chain	3 m, unshielded cordset male 90°
DR	N	Conduit Daisy Chain	Conduit Daisy Chain	3 m, shielded cordset male 90°
DR	W	Conduit Daisy Chain	Conduit Daisy Chain	No cable
RR	blank	Round Media (Male Receptacle)	Round Media (Male Receptacle)	3 m, unshielded cordset male 90°
RR	N	Round Media (Male Receptacle)	Round Media (Male Receptacle)	3 m, shielded cordset male 90°
RR	W	Round Media (Male Receptacle)	Round Media (Male Receptacle)	No cable

i

Option 1	
Code	Description
3	Hand/Off/Auto Selector Keypad with Jog Function

j

Option 2		
Code		Description
CB	blank	Control Brake Contactor
CB	W	No cable
DB	blank	DB Brake Connector
DB1	blank	Connectivity to IP67 DB Resistor
SB	blank	Source Brake Contactor
SB	W	No cable

k

Option 3	
Code	Description
A10	0. . .10V Analog Input
EMI	EMI Filter
OC	Output Contactor
SM	Safety Monitor

Operation

The ArmorStart distributed motor controllers can operate three-phase squirrel-cage induction motors as follows:

- Bulletin 280, 281: 0.24...16 A; 200V AC, 230V AC, 460V AC, 575V AC; 50/60 Hz.
- Bulletin 284[1]: up to 2.0 Hp (1.5 kW) @ 240V AC, up to 5 Hp (3.0 kW) @ 480V AC, and up to 5 Hp (4.0 kW) @ 575V AC; 50/60 Hz.

[1] It is possible to run a 0.5 Hp motor with a 5 Hp ArmorStart Bulletin 284 device. There are no firmware or VFD restrictions for this and the drive is set up to protect it. But with smaller motors (those that are less than 1/6 the ArmorStart Hp rating), the current sensors may become less accurate and the autotune feature may become less reliable.

Depending on the catalog number ordered, the ArmorStart distributed motor controller will accept a control power input of 120V AC, 240V AC or 24V DC.

Mode of Operation

Bulletin 280, 281

Full-Voltage Start

This method is used in applications requiring across-the-line starting, in which full inrush current and locked-rotor torque are realized. The ArmorStart Bulletin 280 offers full-voltage starting and the Bulletin 281 offers full-voltage starting for reversing applications.

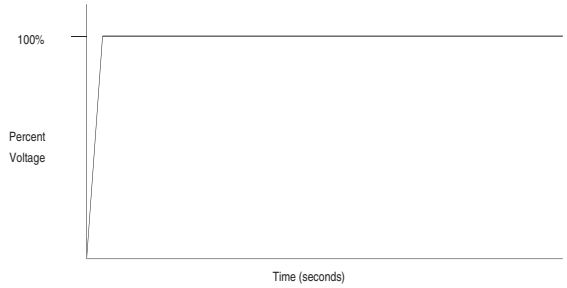

Bulletin 284

Sensorless Vector Performance (Volts per Hertz)

- Drive automatically provides auto boost (IR compensation) and slip compensation
- Provides excellent speed regulation and high levels of torque across the entire speed range of the drive and improved speed regulation even as load increases.
- Most cost-effective performance when sensorless vector control is not required.
- To select this method of operation, select **H** for the **Mode of Operation** that is listed in the catalog structure. See Publication 280-SG001.

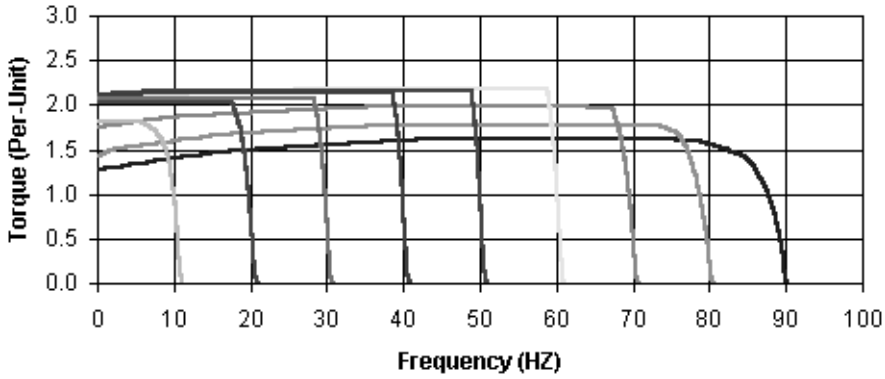

Sensorless Vector Control

- Sensorless Vector Control provides exceptional speed regulation and high levels of torque across the entire speed range of the drive
- The Autotune feature allows the Bulletin 284 ArmorStart distributed motor controller to adapt to individual motor characteristics.
- To select this method of operation, select **V** for the **Mode of Operation** that is listed in the catalog structure. See Publication 280-SG001.

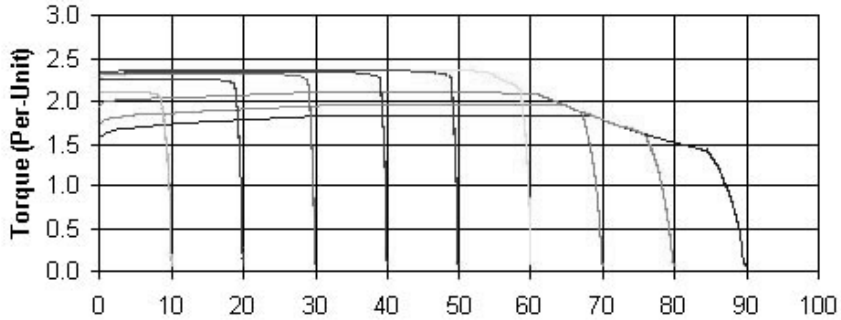

Description of Features

Overload Protection

The ArmorStart distributed motor controller incorporates, as standard, electronic motor overload protection. This overload protection is accomplished electronically with an I^2t algorithm. The ArmorStart distributed motor controller has overload protection that is programmable via the communication network, providing the user with flexibility. If an overload fault were to occur dependent on the overload class and the thermo-utilization, it may require up to 60 seconds or more before a fault reset is allowed.

The Bulletin 280, 281 overload trip class can be selected for class 10, 15, and 20 protection. Ambient insensitivity is inherent in the electronic design of the overload.

Figure 4 - Overload Trip Curves

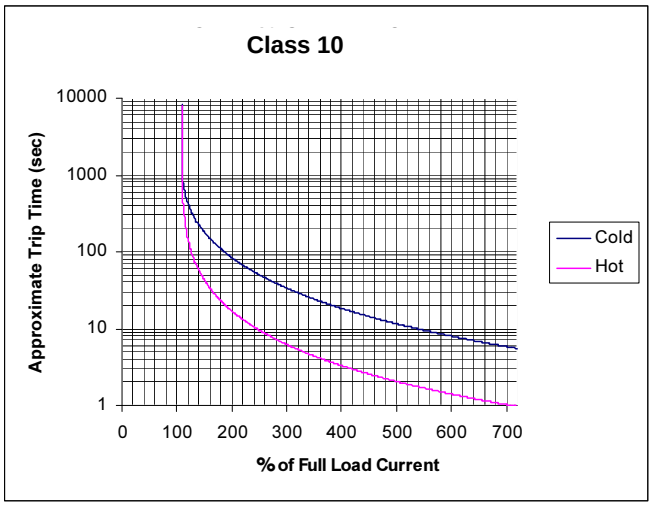

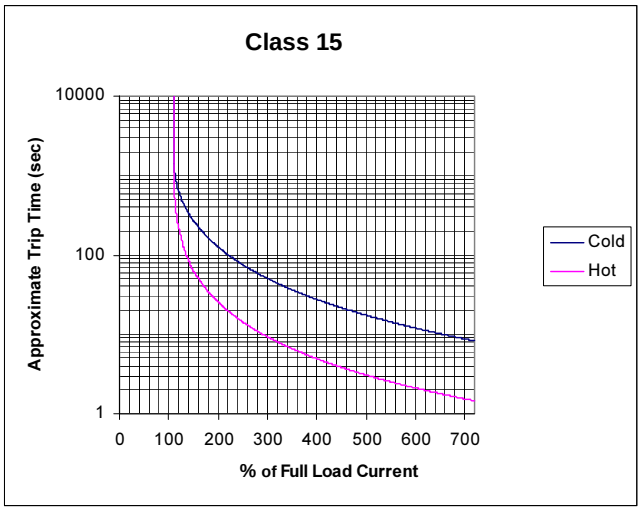

Note: See Overload Class Parameter 107, Thermo-Utilization parameter 105, and OL Reset Level parameter 108 to adjust the reset time.

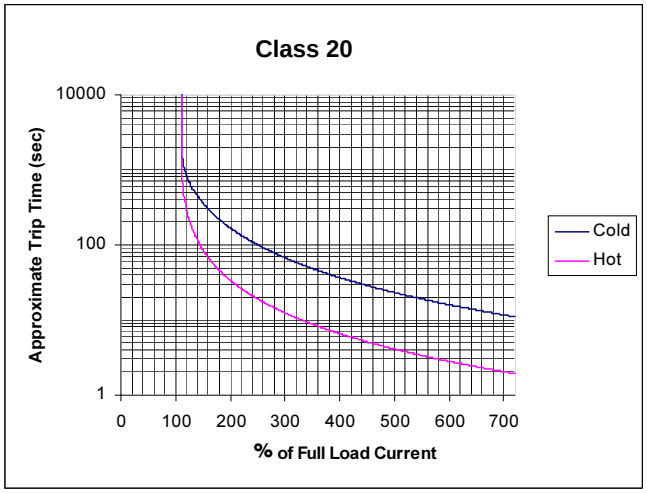

The Bulletin 284 ArmorStart distributed motor controller incorporates, as standard, electronic motor overload protection. This overload protection is accomplished electronically with an I^2t algorithm. The overload protection on the ArmorStart distributed motor controller is programmable via the communication network providing the user with flexibility. Programming the Motor OL Current parameter provides class 10 overload protection for the Bulletin 284 distributed motor controller. Ambient insensitivity is inherent in the electronic design of the overload.

Figure 5 - Overload Trip Curves

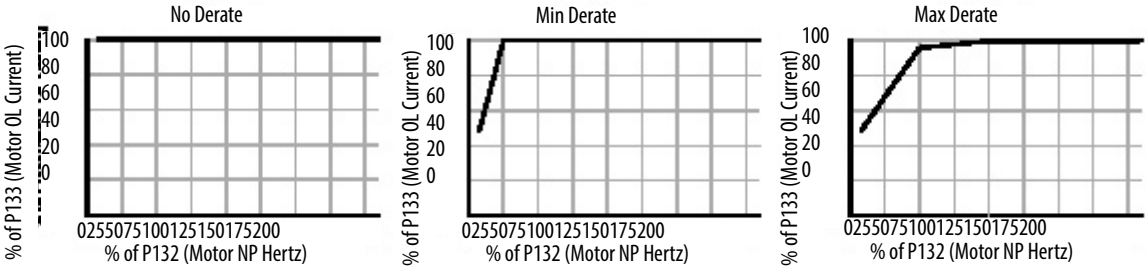

LED Status Indication

The LED Status Indication provides four status LEDs and a RESET button. The LEDs provide status indication for the following:

- **POWER LED**
  The LED is illuminated solid green when control power is present and with the proper polarity
- **RUN LED**
  This LED is illuminated solid green when a start command and control power are present
- **NETWORK LED**
  This bicolor (red/green) LED indicates the status of the communication link
- **FAULT LED**
  Indicates Controller Fault (Trip) condition

The RESET button acts as a local trip reset.

Figure 6 - Status Indication and Reset

Fault Diagnostics

Fault diagnostics capabilities that are built in the ArmorStart distributed motor controller help you pinpoint a problem for easy troubleshooting and quick restarting.

Fault Indication	Available on Bulletin:		Fault Indication	Available on Bulletin:	
	280, 281	284		280, 281	284
• Short Circuit	X	X	• Miscellaneous Fault	—	X
• Overload	X	X	• Brake Fuse Detection	—	X
• Phase Loss	X	X	• Internal Comm. Fault	—	X
• Control Power Loss	X	X	• Shorted SCR	—	—
• Control Power Fuse Detection	X	X	• Phase Rotation	—	—
• Output Power Fuse Detection	X	X	• Heatsink Temperature Fault	—	—
• I/O Fault	X	X	• DC Bus Fault	—	X
• Over Temperature	X	X	• Ground Fault	—	X
• DeviceNet Power Loss	X	X	• Overcurrent	—	X
• EEprom Fault	X	X	• Restart Retries	—	X
• Hardware Fault	X	X	• Stall	—	X
• Phase Imbalance	X	—	• Phase Short	—	X

Inputs

The inputs are single-keyed (two inputs per connector), which are sourced from DeviceNet power (24V DC), with LED status indication.

Outputs

Two dual-key relay output connectors are supplied as standard. The outputs are sourced from control power (A1 and A2). LED status indication is also provided as standard for each output. For high duty cycle applications, consider using an interposing relay to reduce the wear on the internal output.

Gland Plate Entrance

The ArmorStart distributed motor controller offers three different methods of connecting incoming three-phase and control power to the device. Two methods are offered for traditional conduit entrance connection. The first is two 19.1 mm (0.75 in.) and one 25.4 mm (1 in.) conduit knockouts. The second is four 12.7 mm (0.5 in.) conduit knockouts for daisy chain (feed through) applications. The third method offers connectivity to the ArmorConnect® power media. Factory-installed receptacles are provided for connectivity to both three-phase and control power media.

Motor Cable

With every ArmorStart distributed motor controller, a 3-meter (9.8 ft) unshielded 4-conductor cordset is provided with each unit as standard. For Bulletin 284, an optional shielded motor cable can also be selected without the EMI filter option by adding a CRN, DRN, or RRN suffix to the catalog number. If the EMI filter option is selected for Bulletin 284 units, a shielded 4-conductor cable is provided with each unit as standard.

ArmorStart with DeviceNet Network Capabilities

The ArmorStart distributed motor controller delivers advanced capabilities to access parameter settings and provides fault diagnostics, and remote start-stop control. DeviceNet is the communication protocol, provided with the ArmorStart Bulletin 280D, 281D, or 284D distributed motor controller.

DeviceLogix

DeviceLogix™ is a standalone Boolean program that resides within the ArmorStart distributed motor controller. DeviceLogix is programmed using Boolean math operations, such as, AND, OR, NOT, Timers, Counters, and Latches. DeviceLogix can run as a standalone application, independent of the network. However, 24V DC must be supplied at the DeviceNet connector to power the inputs.

Peer-to-peer Communications (ZIP)

The zone control capabilities of ArmorStart distributed motor controllers are ideal for large horsepower (0.5...10 Hp) motored conveyors. The ArmorStart distributed motor controllers have built-in DeviceNet communications, DeviceLogix technology, and the added Zone Interlocking Parameters (ZIP) which allow one ArmorStart to receive data directly, from up to four other DeviceNet nodes, without going through a network scanner. These direct communications between conveyor zones are beneficial in a merge, diverter, or accumulation conveyor application.

Factory Installed Options

Optional Safety Monitor

The Safety Monitor Option allows for independent monitoring of the output status of the device. The function is implemented using a normally closed contact that complies with EN/IEC 60947-5-1 for mechanically linked contacts. Two terminal blocks are provided as the inputs that may be used with an external safety circuit. The external safety circuit monitors the status of the contactor.

Optional HOA Keypad Configuration (Bulletin 280, 281 only)

The ArmorStart offers two optional factory-installed Hand/Off/Auto (HOA) configurations: Standard and Forward/Reverse HOA.

Figure 7 - Optional HOA Configuration

Optional HOA Selector Keypad with Jog Function (Bulletin 284 only)

The HOA Selector Keypad with Jog Function allows for local start/stop control with capabilities to jog in forward/reverse motor directions.

Figure 8 - Optional HOA with Jog Function Configuration

Source Brake Contactor (Bulletin 284 only)

An internal contactor is used to switch the electromechanical motor brake on/off. The motor brake is powered from the main power circuit. A customer-accessible, 3.0 A, open fuse is detected over the network via Last Protection fault parameter 61. A fuse is provided to protect the brake cable. A 3-meter (9.8 ft), 3-pin cable for connection to the motor brake is provided as standard when the option is selected. See *Appendix G, Manual Brake Control for ArmorStart via DeviceLogix* for manual activation instructions.

EMI Filter (Bulletin 284 only)

The EMI Filter option is required if the Bulletin 284 ArmorStart distributed motor controller must be CE compliant. If the EMI Filter is selected, a 3-meter (9.8 ft) shielded 4-conductor cordset is provided as standard. This option is only available with sensorless vector control.

Dynamic Brake (Bulletin 284 only)

A 3-meter (9.8 ft), 3-pin cable for connection to a dynamic brake module is provided as standard when this option is selected. See *Appendix H* for available dynamic brake modules.

Dynamic Brake Resistor (Bulletin 284 only)

The IP67 Dynamic Brake Resistor plug and play design offers simplicity in writing and installation. The factory installed option of DB1 must be selected to have the quick disconnect connectivity. The cable length of the IP67 Dynamic Brake Resistor is available in two lengths: 0.5 m (1.6 ft) and 1 m (3.3 ft). See *Appendix H*, for available IP67 Dynamic Brake Resistors.

Control Brake Contactor (Bulletin 284 only)

An internal contactor is used to switch the electromechanical motor brake On/Off. The motor brake is powered from the control voltage circuit. A customer accessible 3.0 A fuse is provided to protect the brake cable. An open fuse is detected over the network via Last Protection fault parameter 61. One 3-meter (9.8 ft), 3-pin cable for connection to the motor brake is provided as standard when this option is selected. See *Appendix G,* for manual activation instructions.

Output Contactor (Bulletin 284 only)

An internal contactor is sourced from the control voltage to isolate the load side of the Bulletin 284 ArmorStart distributed motor controller. When control power is applied, the output contactor is closed and when control power is removed, the output contact opens. There is no switching element, such as a relay, in the system. If control power is lost, then the output contactor opens, since its coil power is lost. A sequenced stop involving the output contactor cannot be performed.

Shielded Motor Cable (Bulletin 284 only)

A 3-meter (9.8 ft) shielded 4-conductor cordset is provided instead of the 3-meter (9.8 ft) unshielded 4-conductor cordset. If the EMI Filter is selected, a 3-meter (9.8 ft) shielded 4-conductor cordset is provided as standard.

0…10V Analog Input (Bulletin 284 only)

The Bulletin 284 distributed motor controller with sensorless vector control provides a 0...10V analog input. The 0...10V Analog Input is a factory installed option that provides a 0...10V external frequency command from the 0...10V, or ±10V analog input, or remote potentiometer. A 5-pin micro receptacle is provided for connectivity for customer connection. A shielded 5-conductor cordset or patch cord is recommended.

Notes:

Installation, Wiring, and Maintenance

Receiving

It is the responsibility of the user to thoroughly inspect the equipment before accepting the shipment from the freight company. Check the item(s) received against the purchase order. If any items are damaged, it is the responsibility of the user not to accept delivery until the freight agent has noted the damage on the freight bill. Should any concealed damage be found during unpacking, it is again the responsibility of the user to notify the freight agent. The shipping container must be left intact and the freight agent should be requested to make a visual inspection of the equipment.

Unpacking

Remove all packing material, wedges, or braces from within and around the starter. Remove all packing material from device(s).

Inspecting

After unpacking, check the nameplate catalog number(s) against the purchase order.

Storing

The controller should remain in its shipping container before installation. If the equipment is not to be used for a period of time, it must be stored according to the following instructions to maintain warranty coverage.

- Store in a clean, dry location.
- Store within an ambient temperature range of –25...+85 °C (–13...+185 °F).
- Store within a relative humidity range of 0...95%, noncondensing.
- Do not store equipment where it could be exposed to a corrosive atmosphere.
- Do not store equipment in a construction area.

General Precautions

In addition to the precautions listed throughout this manual, the following statements, which are general to the system, must be read and understood.

SHOCK HAZARD: Risk of electrical shock. Do not disconnect or connect power cables under load.

ATTENTION: Total circuit impedance must be low enough to ensure any short circuit or ground fault current is large enough to operate the fuse or circuit breaker. Failure to comply can result in death, personal injury, and/or equipment damage.

ATTENTION: The controller contains ESD (electrostatic discharge) sensitive parts and assemblies. Static control precautions are required when installing, testing, servicing, or repairing the assembly. Component damage may result if ESD control procedures are not followed. If you are not familiar with static control procedures, see Publication 8000-4.5.2, *Guarding against Electrostatic Discharge*, or any other applicable ESD protection handbooks.

ATTENTION: An incorrectly applied or installed controller can damage components or reduce product life. Wiring or application errors, such as undersizing the motor, incorrect or inadequate AC supply, or excessive ambient temperatures, may result in malfunction of the system.

ATTENTION: Only personnel familiar with the controller and associated machinery should plan or implement the installation, startup, and subsequent maintenance of the system. Failure to do this may result in personal injury and/or equipment damage.

Precautions for Bulletin 284 Applications

WARNING: The drive contains high voltage capacitors that take time to discharge after removal of mains supply. Before working on a drive, verify isolation of mains supply from line inputs (R, S, T [L1, L2, L3]). Wait three minutes for capacitors to discharge to safe voltage levels. Failure to do so may result in personal injury or death.
Darkened display LEDs are not an indication that capacitors have discharged to safe voltage levels.

ATTENTION: Only qualified personnel familiar with adjustable frequency AC drives and associated machinery should plan or implement the installation, startup, and subsequent maintenance of the system. Failure to do this may result in personal injury and/or equipment damage.

Dimensions for Bulletin 280, 281

IP67/Type 4/12 with Conduit Entrance

Dimensions are shown in millimeters (inches). Dimensions are not intended to be used for manufacturing purposes. All dimensions are subject to change.

Figure 9 - Dimensions for IP67/Type 4/12 with Conduit Entrance (CR option)

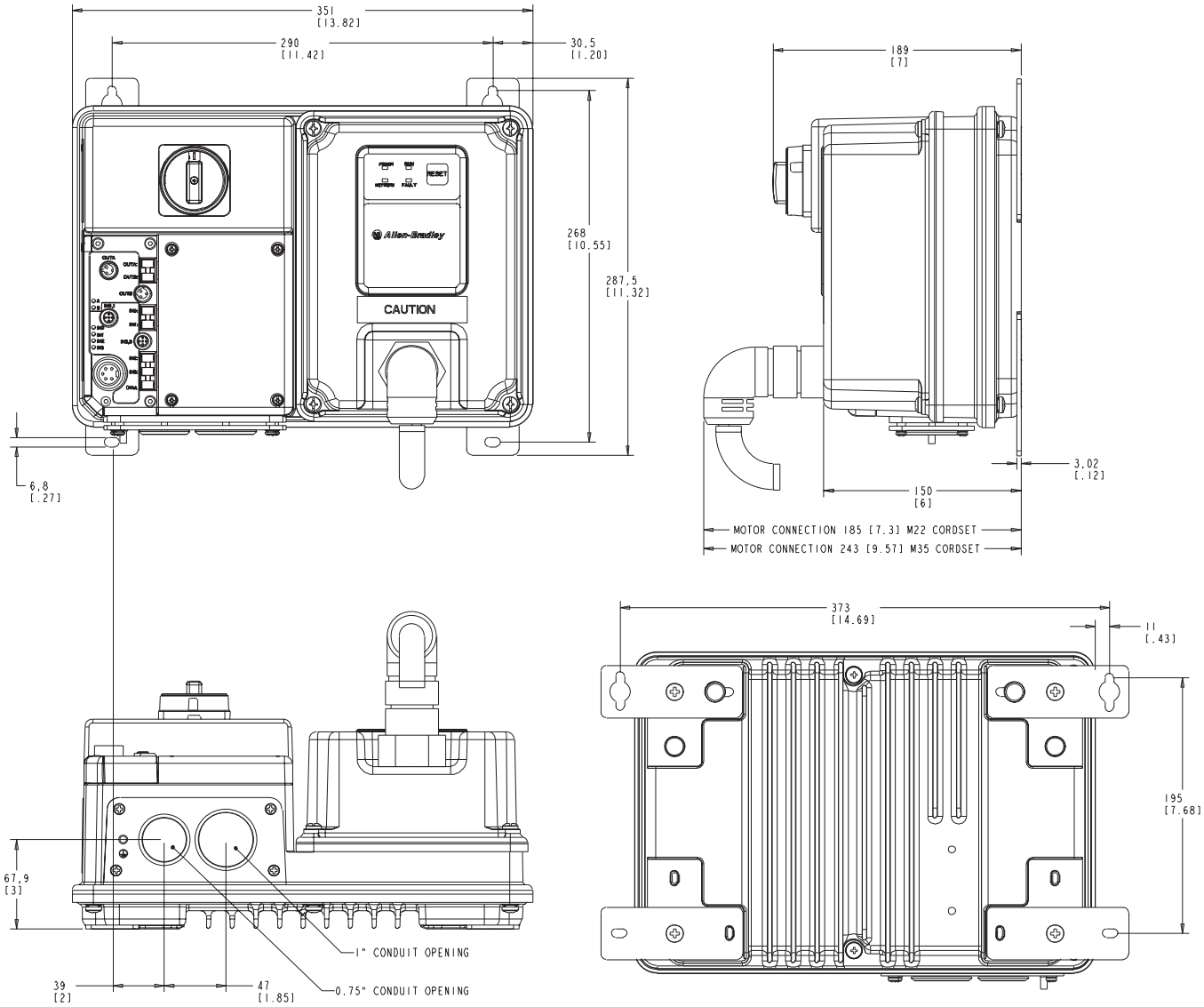

Dimensions are shown in millimeters (inches). Dimensions are not intended to be used for manufacturing purposes. All dimensions are subject to change.

Figure 10 - Dimensions for IP67/Type 4/12 with Daisy Chain (DR option) Conduit Entrance

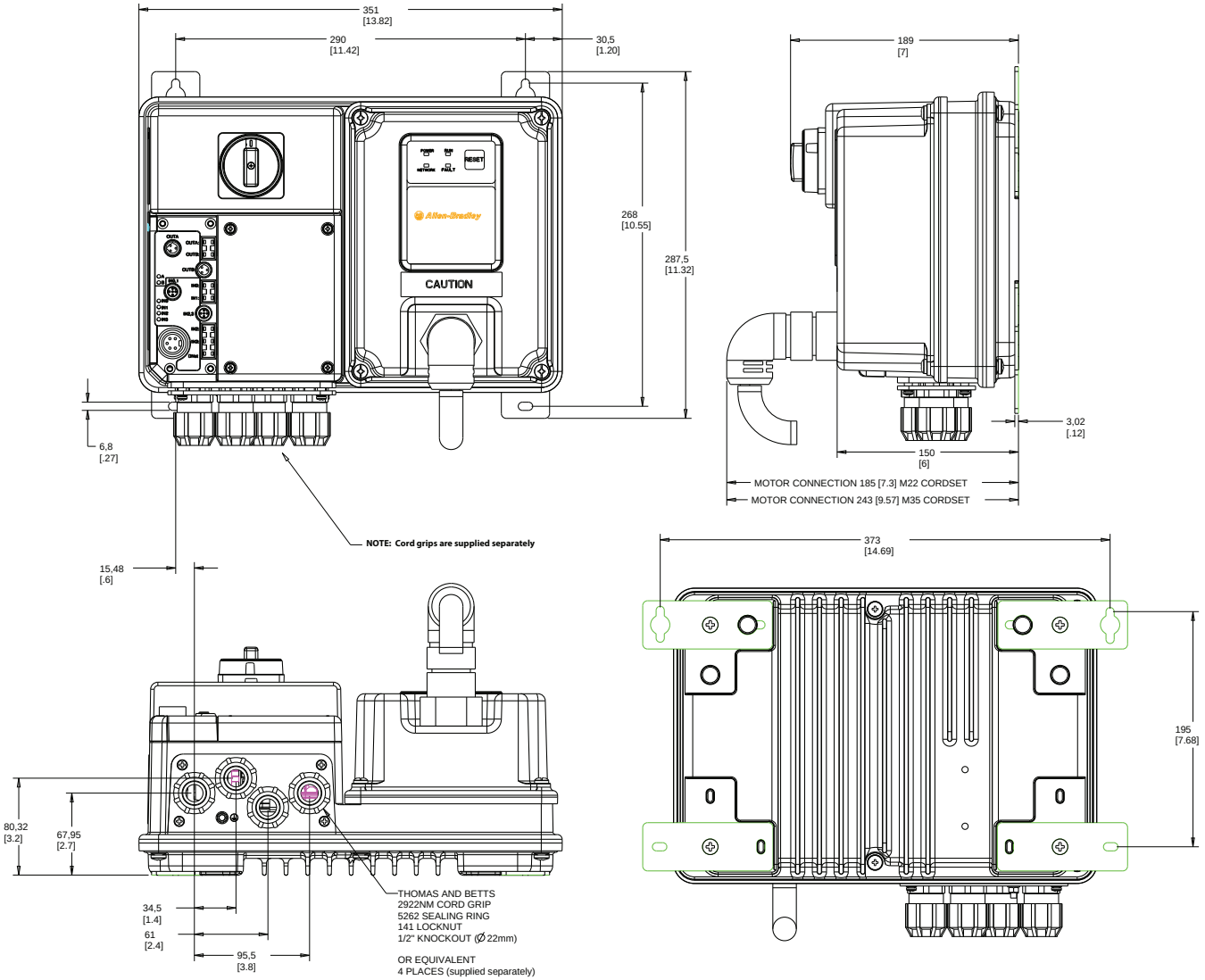

IP67/Type 4/12 with ArmorConnect Connectivity

Dimensions are shown in millimeters (inches). Dimensions are not intended to be used for manufacturing purposes. All dimensions are subject to change.

Figure 11 - Dimensions for IP67/Type 4/12 with ArmorConnect Connectivity

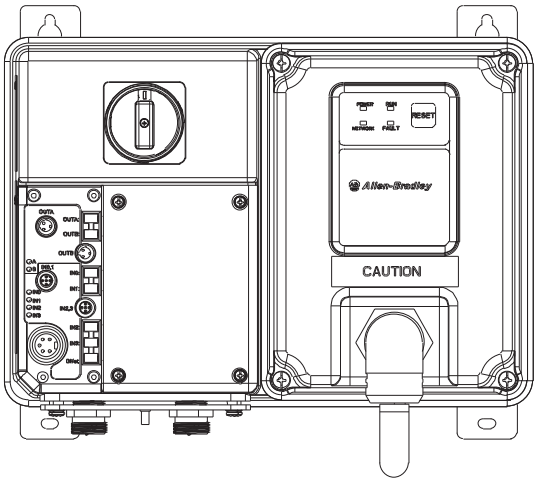

ArmorStart with a 10 A Short-Circuit Protection Rating

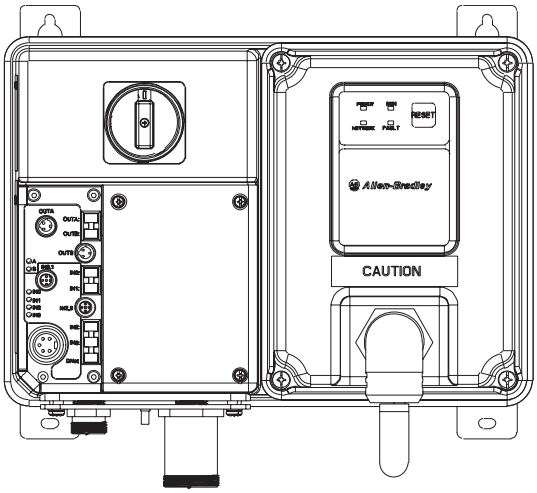

ArmorStart with a 25 A Short-Circuit Protection Rating

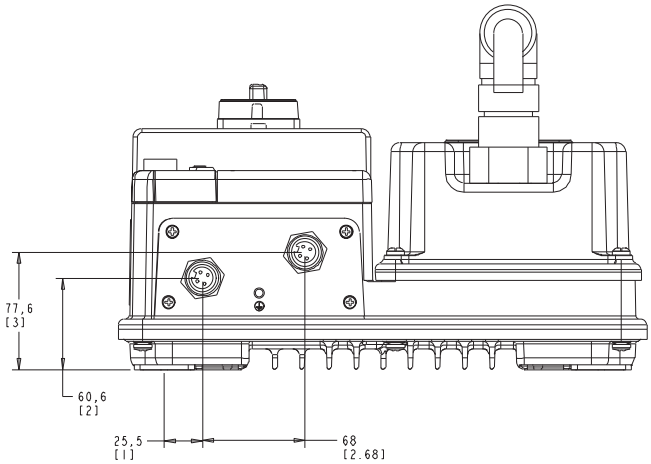

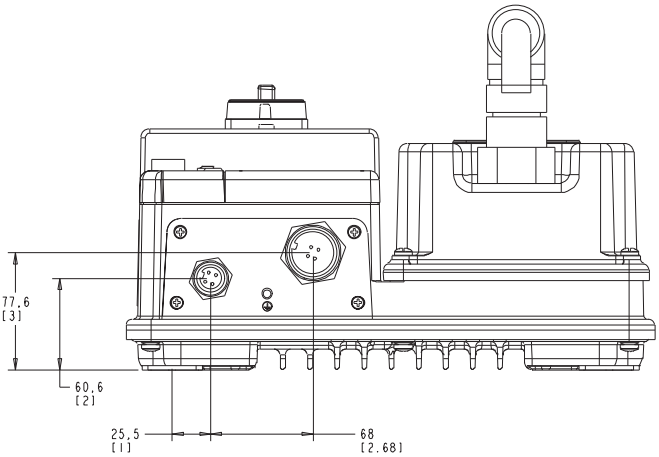

Figure 12 - Bulletin 280D, 281D ArmorStart with DeviceNet Communication Protocol

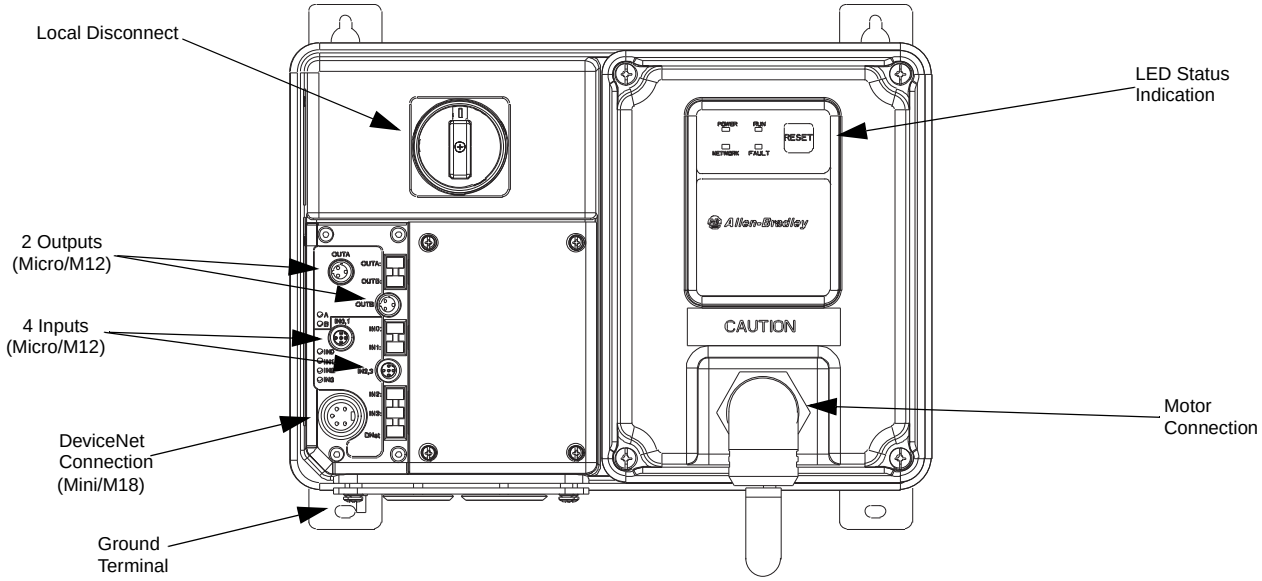

Figure 13 - Bulletin 280D, 281D ArmorStart with ArmorConnect Connectivity

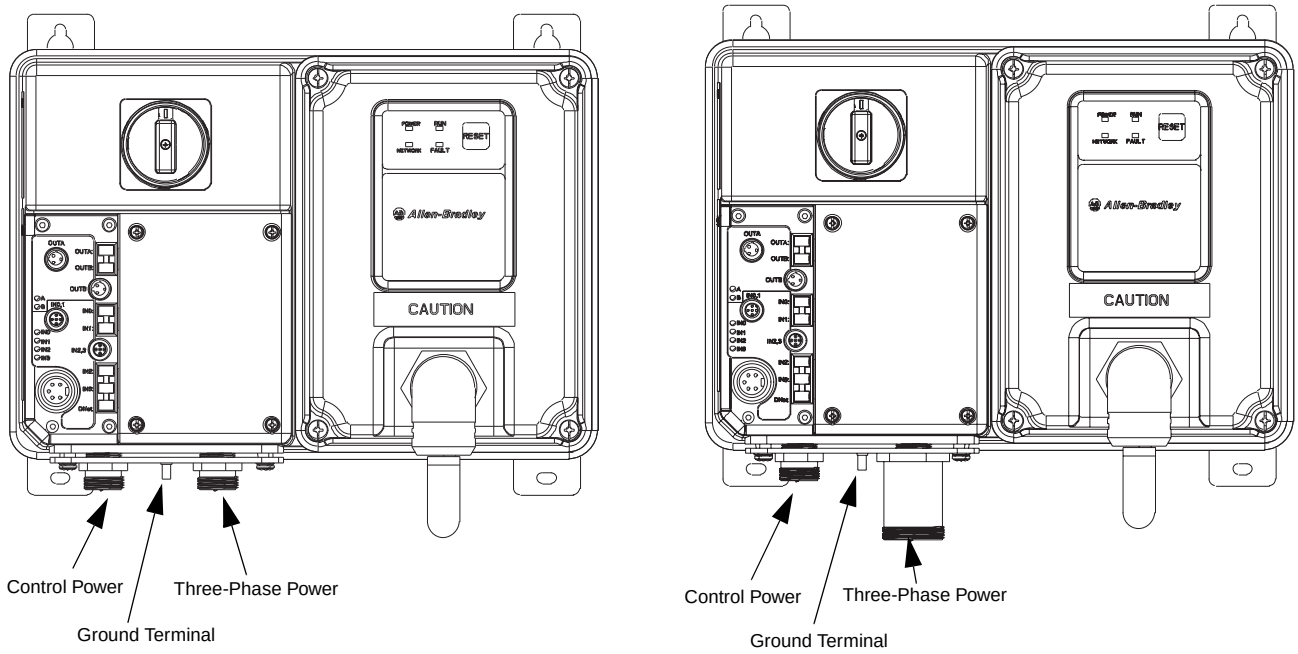

Dimensions for Bulletin 284

Dimensions are shown in millimeters (inches). Dimensions are not intended to be used for manufacturing purposes. All dimensions are subject to change.

Figure 14 - Dimensions for 1 Hp and below @ 230V AC, 2 Hp and below @ 460V AC with Conduit Entrance (CR option)

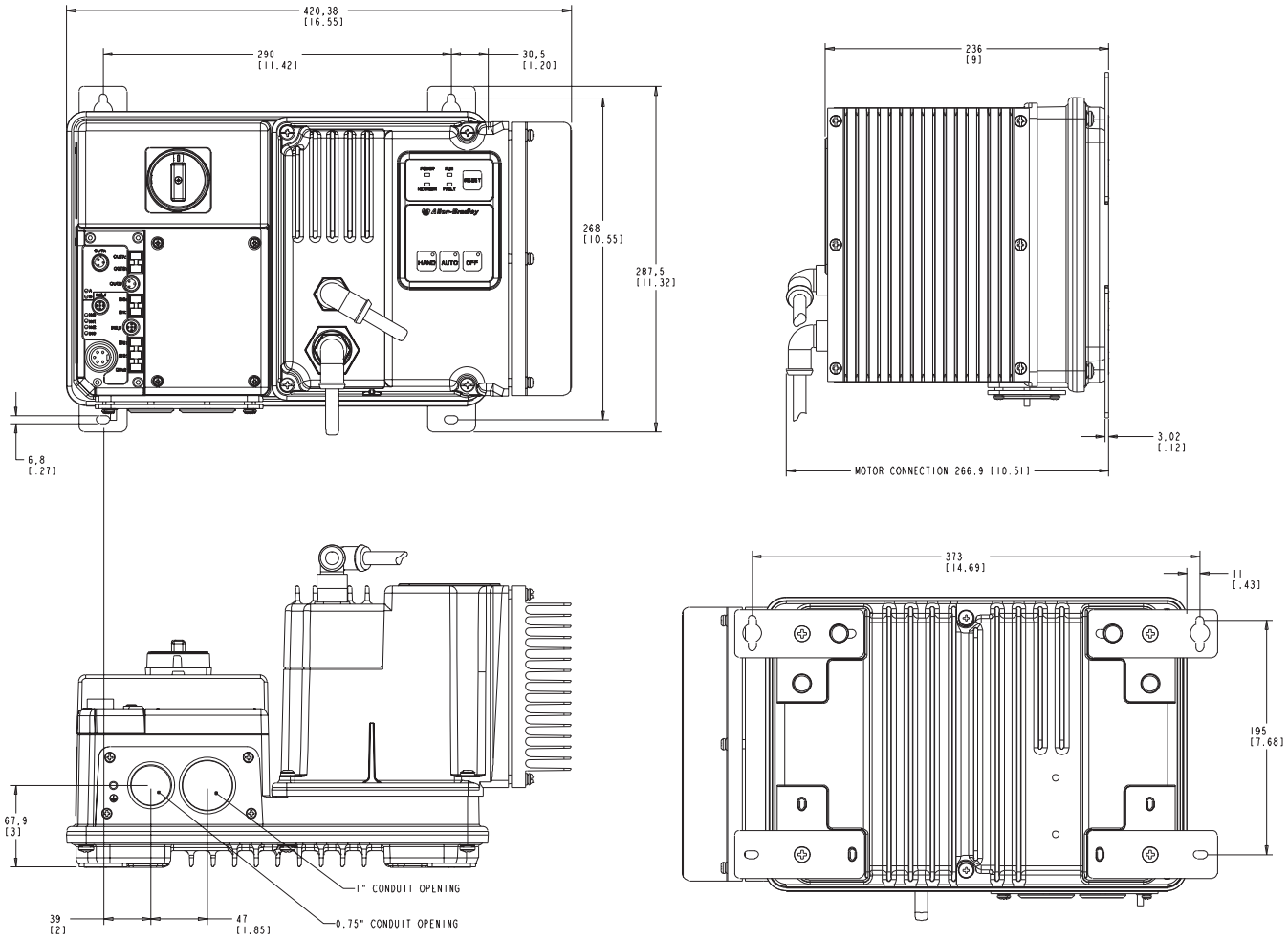

Dimensions are shown in millimeters (inches). Dimensions are not intended to be used for manufacturing purposes. All dimensions are subject to change.

Figure 15 - Dimensions for 1 Hp and below @ 230V AC, 2 Hp and below @ 460V AC, IP67/Type 4/12 with Daisy Chain (DR option) Conduit Entrance

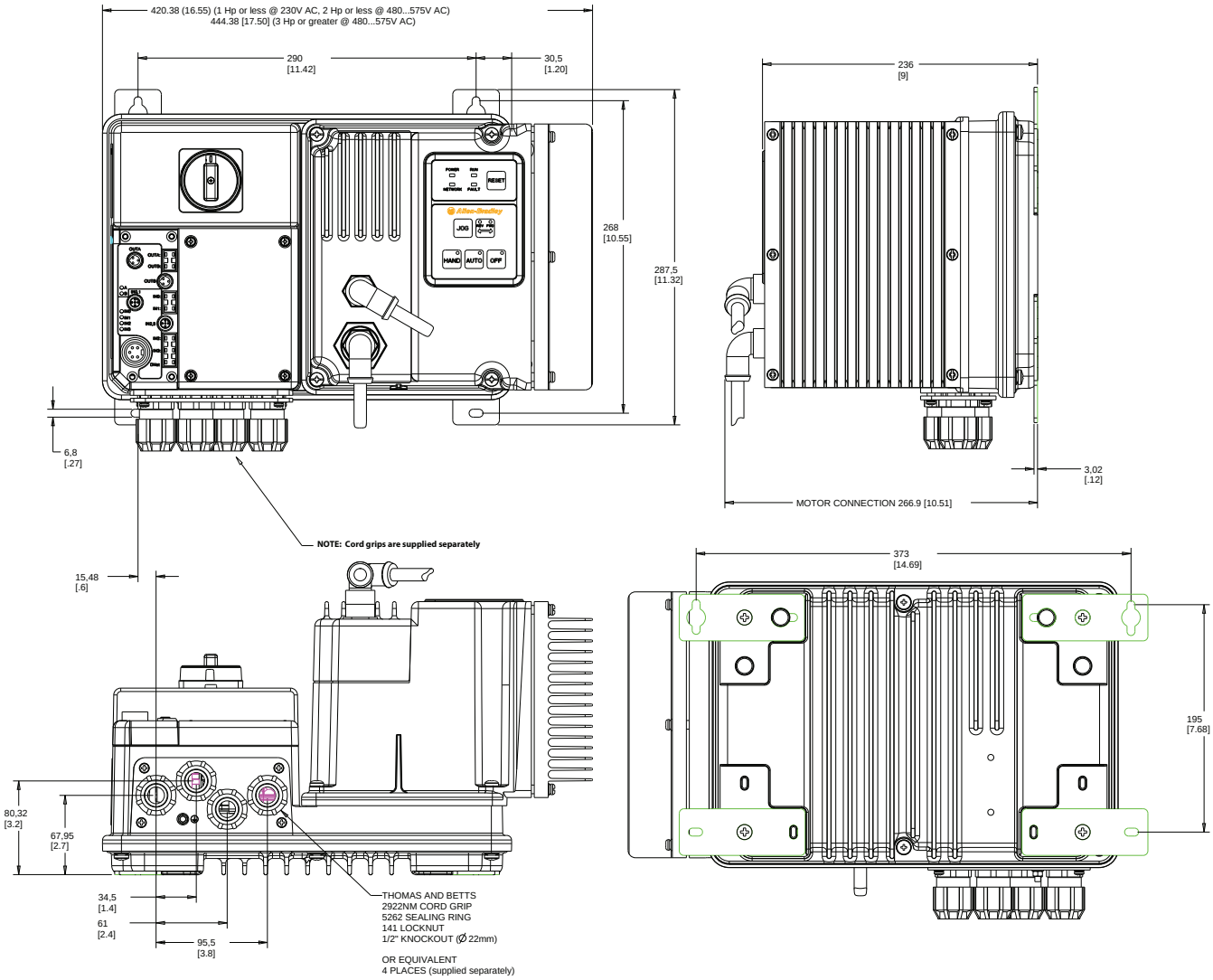

Dimensions are shown in millimeters (inches). Dimensions are not intended to be used for manufacturing purposes. All dimensions are subject to change.

Figure 16 - Dimensions for 1 Hp and below @ 230V AC and 2 Hp and below @ 460V AC with ArmorConnect Connectivity

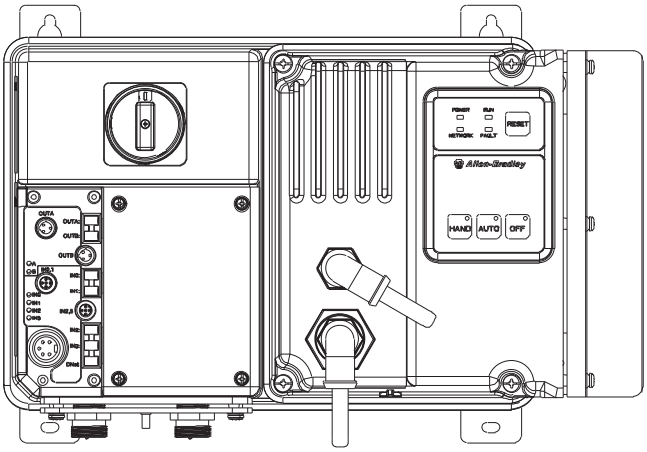

ArmorStart device with a 10 A short circuit protection rating

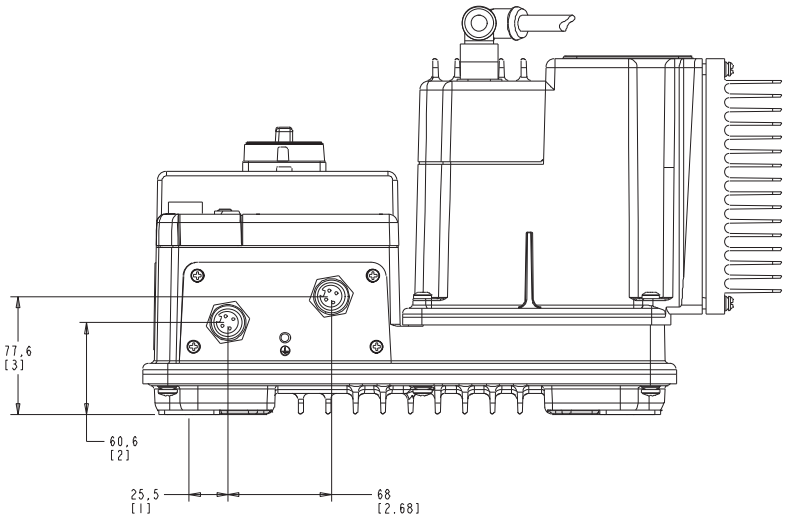

Dimensions are shown in millimeters (inches). Dimensions are not intended to be used for manufacturing purposes. All dimensions are subject to change.

Figure 17 - Dimensions for 2 Hp @ 230V AC and 3 Hp and above @ 460V AC with Conduit Entrance (CR option)

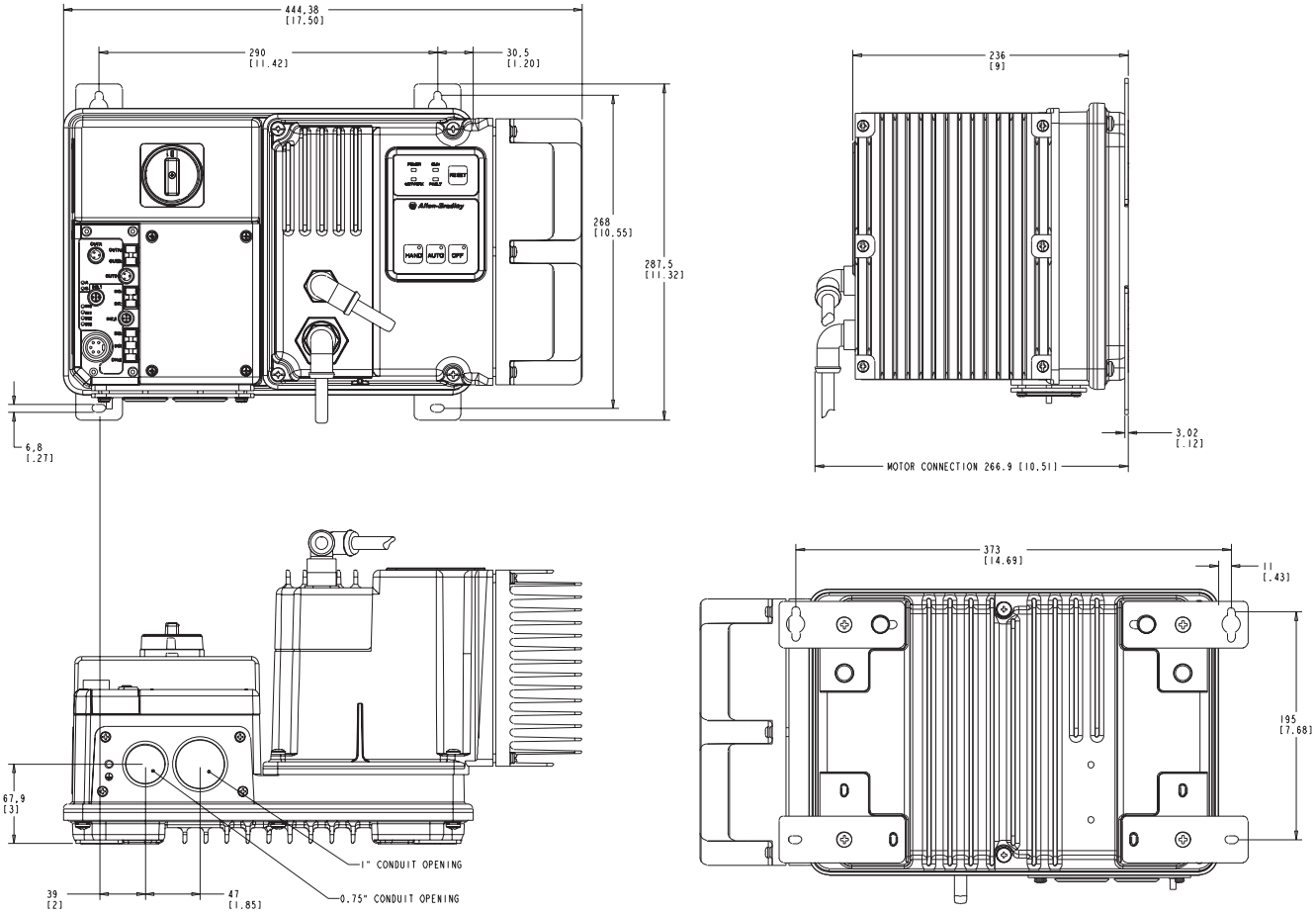

Dimensions are shown in millimeters (inches). Dimensions are not intended to be used for manufacturing purposes. All dimensions are subject to change.

Figure 18 - Dimensions for 2 Hp @ 230V AC, 3 Hp and above @ 460V AC, IP67/Type 4/12 with Daisy Chain (DR option) Conduit Entrance

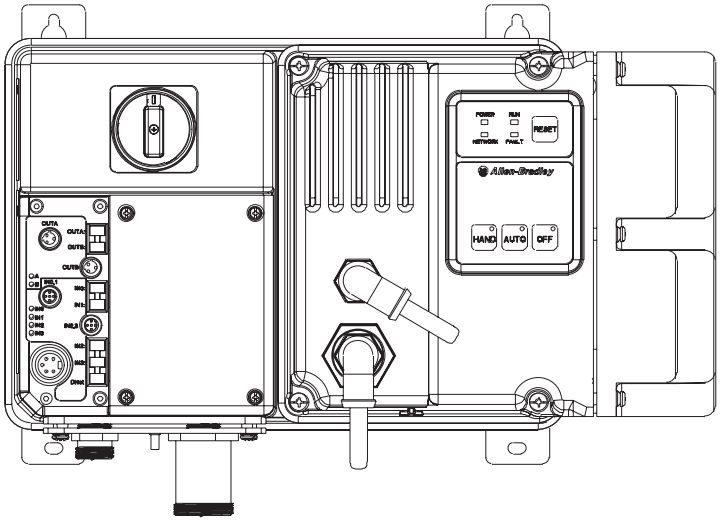

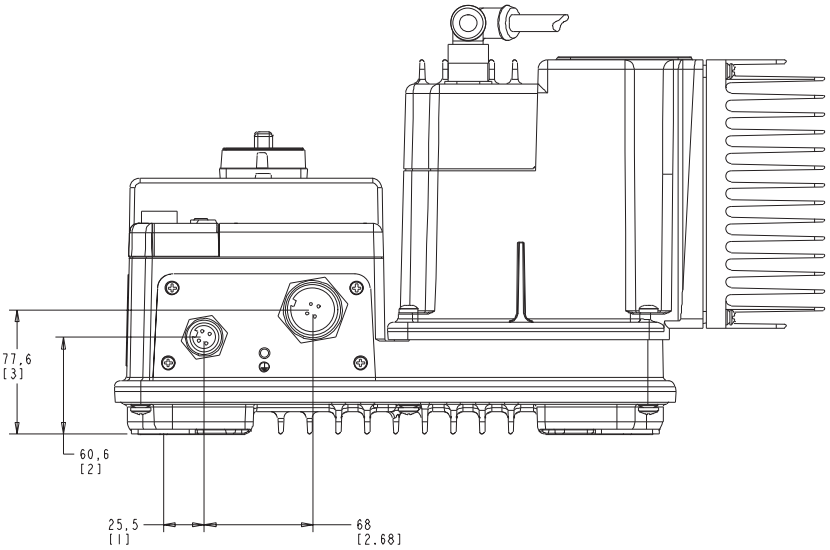

Figure 19 - Bulletin 284 ArmorStart

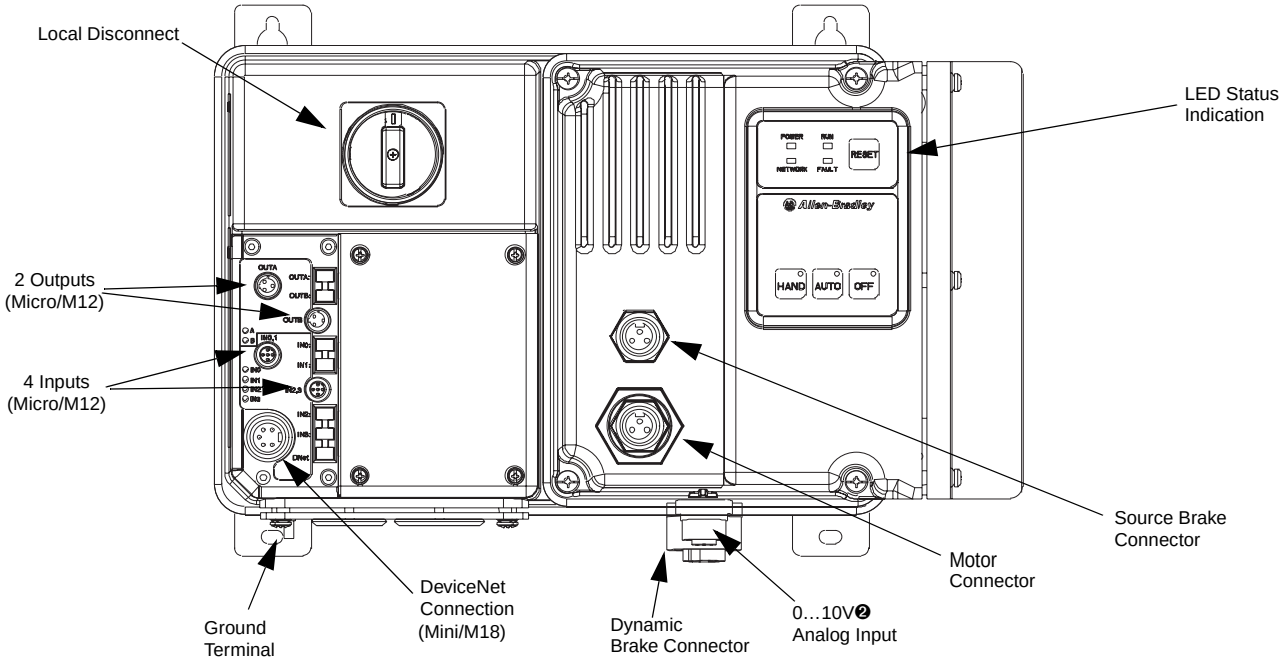

❷ Available only with the Bulletin 284 with sensorless vector control.

Figure 20 - Bulletin 284 ArmorStart with ArmorConnect

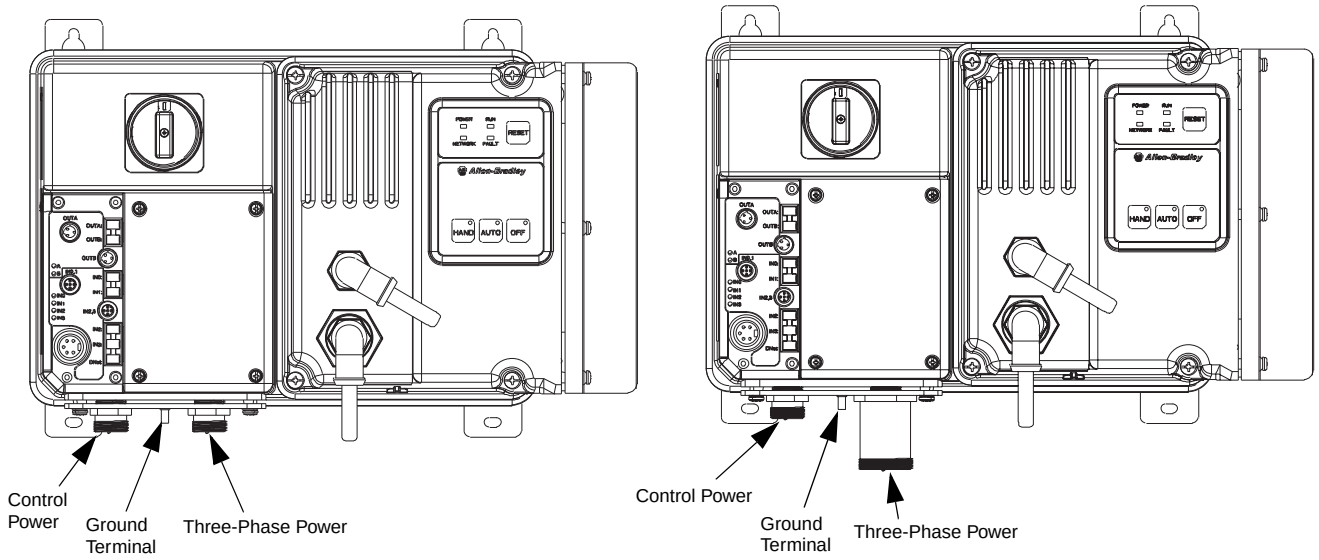

Mount Orientation

The recommended mounting orientation of ArmorStart is the normal vertical configuration. This is especially important for the Bulletin 284. This ensures proper airflow over the heat sink. Improper mounting or debris buildup reduces airflow and increases internal temperatures. This may reduce the overall life of the product. For alternate mounting contact your local sales representative.

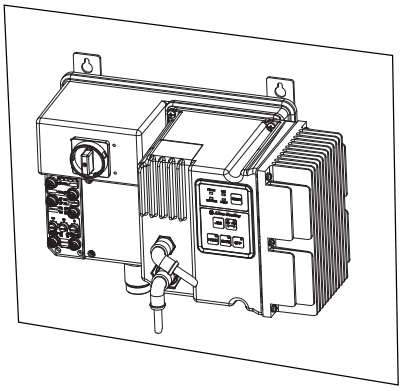

Operation

The ArmorStart distributed motor controllers can operate three-phase squirrel-cage induction motors as follows:

- Bulletin 280D, 281D: 0.24...16 A; 200V AC, 230V AC, 460V AC; 50/60 Hz
- Bulletin 284D: up to 5 Hp (3.0 kW) @ 480V AC

Wiring

Power, Control, Safety Monitor Inputs, and Ground Wiring

Table 1 - provides the power, control, and ground wire capacity and the tightening torque requirements. The power, control, ground, and safety monitor terminals can accept a maximum of two wires per terminal.

Table 1 - Power, Control, Safety Monitor Inputs, Ground Wire Size, and Torque Specifications

Terminals	Wire Size	Torque	Wire Strip Length
Power and Ground	**Primary/Secondary Terminal:** 1.5…4.0 mm^2 (#16 …#10 AWG)	**Primary Terminal:** 1.2 N•m (10.8 lb•in) **Secondary Terminal:** 0.5 N•m (4.5 lb•in)	9 mm (0.35 in.)
Control and Safety Monitor Inputs	1.0 mm^2…4.0 mm^2 (#18…#10 AWG)	0.7 N•m (6.2 lb•in)	9 mm (0.35 in.)

Standard Conduit/Knockout Size

The following table shows conduit or cord grip size and the diameter of the punched hole. For example 16 mm (0.5 in.) conduit requires a hole punch of 22.48 mm (0.885 in.) for proper installation.

Table 2 - Conduit and Knockout Sizes

Conduit/Cord Size (mm)	Conduit/Cord Size (in.)	Actual Hole Diameter (mm)	Actual Hole Diameter (in.)
16.00	0.50	22.48	0.885
21.00	0.75	28.32	1.115
27.00	1.00	34.59	1.362
35.00	1.25	43.21	1.701
41.00	1.50	49.48	1.948
53.00	2.00	61.34	2.415
63.00	2.50	73.91	2.910

Terminal Designations

As shown in the next figures, the ArmorStart distributed motor controller contains terminals for power, control, safety monitor inputs, and ground wiring. Access can be gained by removing the terminal access cover plate.

Figure 21 - Bulletin 280, 281 ArmorStart Power, Control, and Terminals

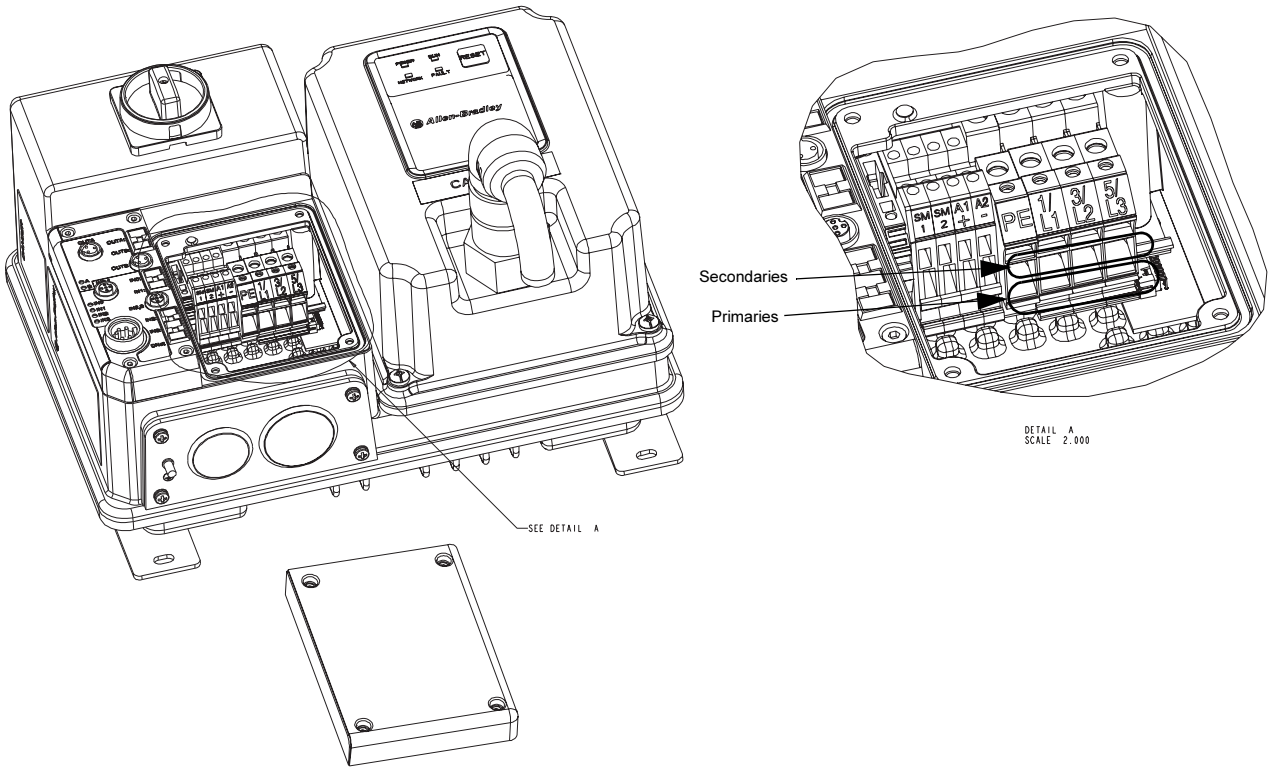

Figure 22 - Bulletin 284 ArmorStart Power and Control Terminals

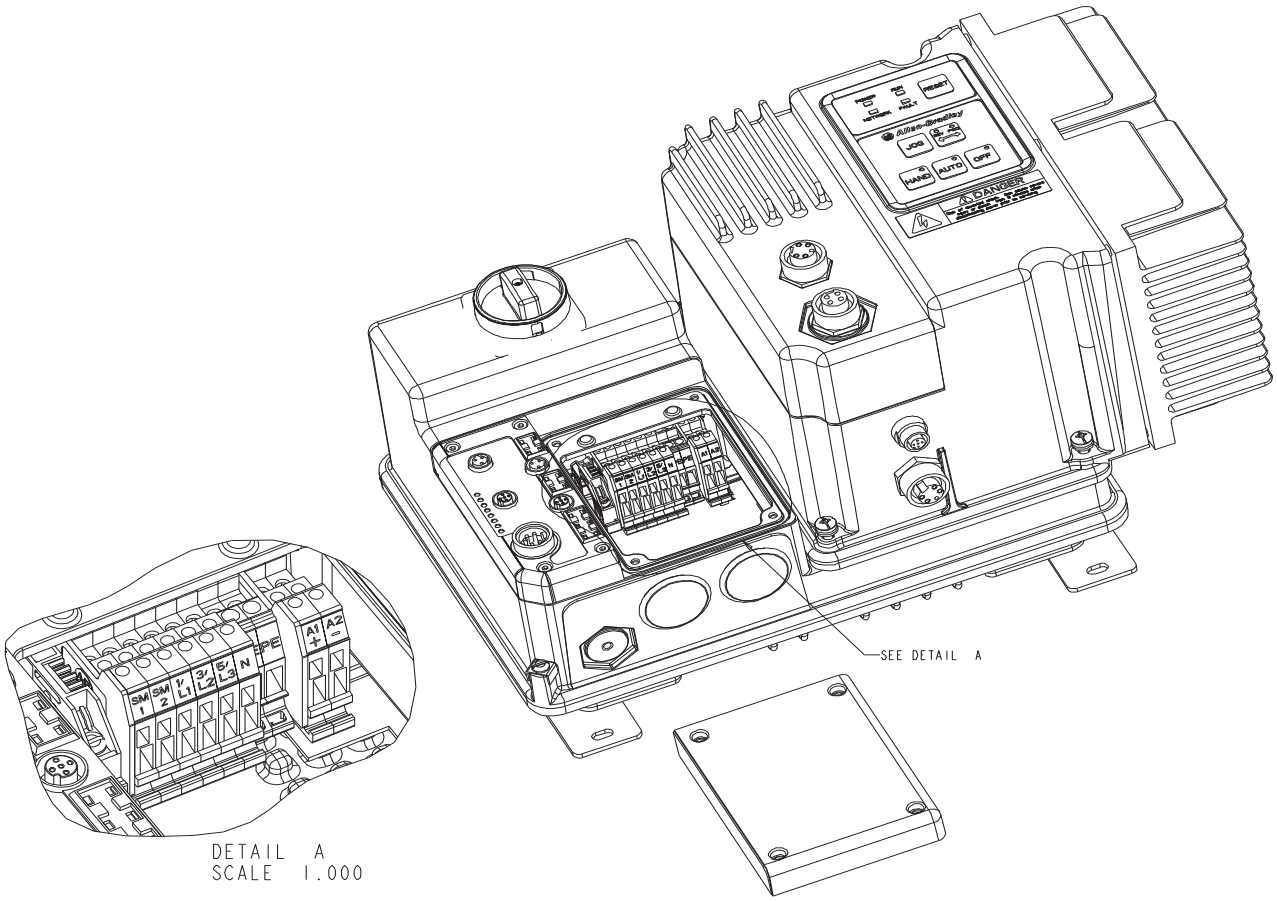

Table 3 - Power, Control, Safety Monitor, and Ground Terminal Designations

Terminal Designations	No. of Poles	Description
SM1 ❶	2	Safety Monitor Input
SM2 ❶	2	Safety Monitor Input
A1 (+)	2	Control Power Input
A2 (-)	2	Control Power Common
PE	2	Ground
1/L1	2	Line Power Phase A
3/L2	2	Line Power Phase B
5/L3	2	Line Power Phase C

❶ Only available with the Safety Monitor option.

Optional Locking Clip

The clam shell design clips over the ArmorStart motor connector and motor cable to limit customer access from disconnecting the motor cable on the ArmorStart distributed motor controller. The locking clip is an optional device that can be used, if desired.

Figure 23 - Bulletin 280, 281Installation of Locking Clip

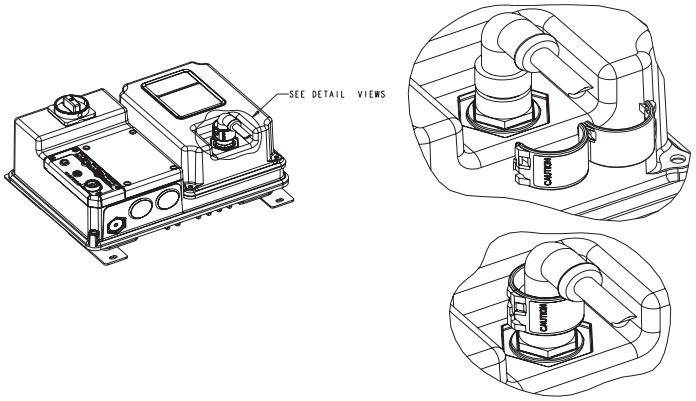

Figure 24 - Bulletin 284 Installation of Locking Clip

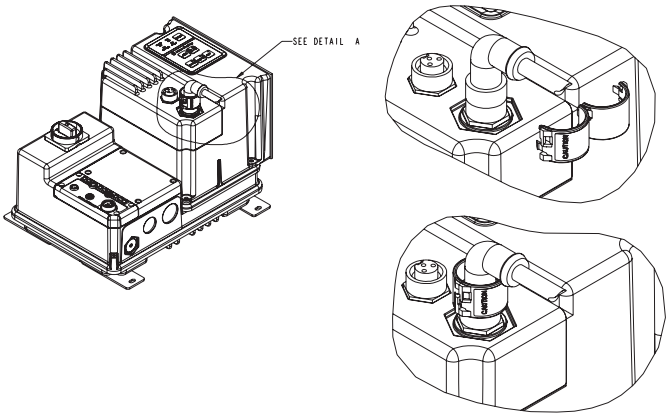

ArmorConnect Power Media

Description

Details of ArmorConnect Power Media are described in Publication 280PWR-SG001, *ArmorConnect Power and Control Media*.

The ArmorConnect power media offers both three-phase and control power cable cord set systems including patchcords, receptacles, tees, reducers and accessories to be used with the ArmorStart Distributed Motor Controller. These cable system components allow quick connection of ArmorStart Distributed Motor Controllers, reducing installation time. They provide for repeatable, consistent connection of the three-phase and control power to the ArmorStart Distributed Motor Controller and motor by providing a plug-and-play environment that also avoids system mis-wiring.

IMPORTANT ArmorConnect connections should be made hand tight. See the ArmorConnnect instructions for recommended tightening torque. The use of a tool to help in the tightening of the connector is not recommended.

When specifying power media for use with the ArmorStart Distributed Motor Controllers (Bulletins 280E, 281E, and 284E), use only motor and power cables that are listed for use with ArmorStart.

ArmorConnect power cables are UL 2237 Listed.

IMPORTANT The ArmorStart UL listing does not permit using a third party or un-listed motor and power cable assembly. Using a cable assembly that is not permitted results in a loss of Listing and does not comply with NFPA 79 or the NFPA 70 (NEC) (see 110.3(B) of the NEC).

For reference, the UL White Book states the following for power media cable assemblies meeting UL 2237 standard:

"These devices are intended for use only with the Listee's same line of products that are covered under this category...."

SHOCK HAZARD: Risk of electrical shock. Do not disconnect or connect power cables under load.

ATTENTION: ArmorConnect cables are not intended to be connected or disconnected under load. This may result physical injury or equipment damage as a result of high make and break currents and potential fault currents.

Figure 25 - Three-Phase Power System Overview

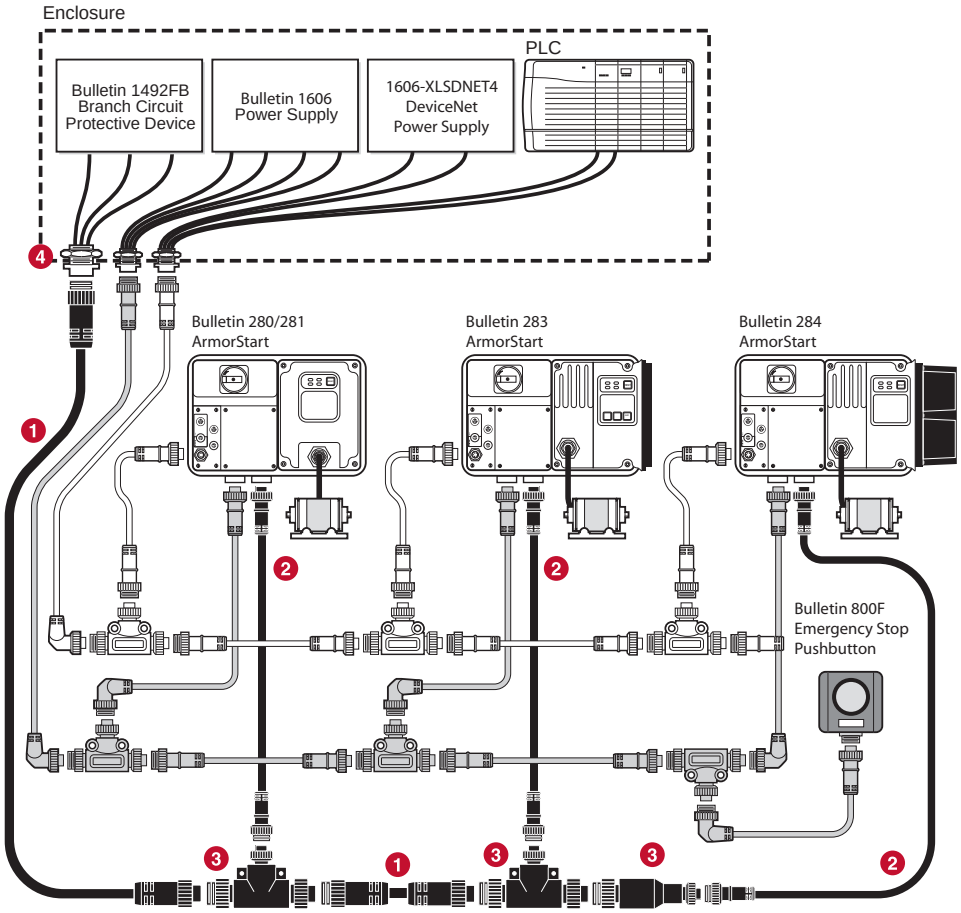

❶ Three-Phase Power Trunk- Patchcord cable with integral female or male connector on each end
Example Catalog Number: 280-PWR35A-M*

❷ Three-Phase Drop Cable- Patchcord cable with integral female or male connector on each end
Example Catalog Number: 280-PWR22A-M*

❸ Three-Phase Power Tees and Reducer -
Tee connects to a single drop line to trunk with quick change connectors – Catalog Number: 280-T35
Reducing Tee connects to a single drop line (Mini) to trunk (Quick change) connector – Catalog Number: 280-RT35
Reducer connects from quick change male connector to mini female connector– Catalog Number: 280-RA35

❹ Three-Phase Power Receptacles -
Female receptacles are a panel mount connector with flying leads – Catalog Number: 280-M35F-M1

Figure 26 - Control Power Media System Overview using 6/5 Pin Tee

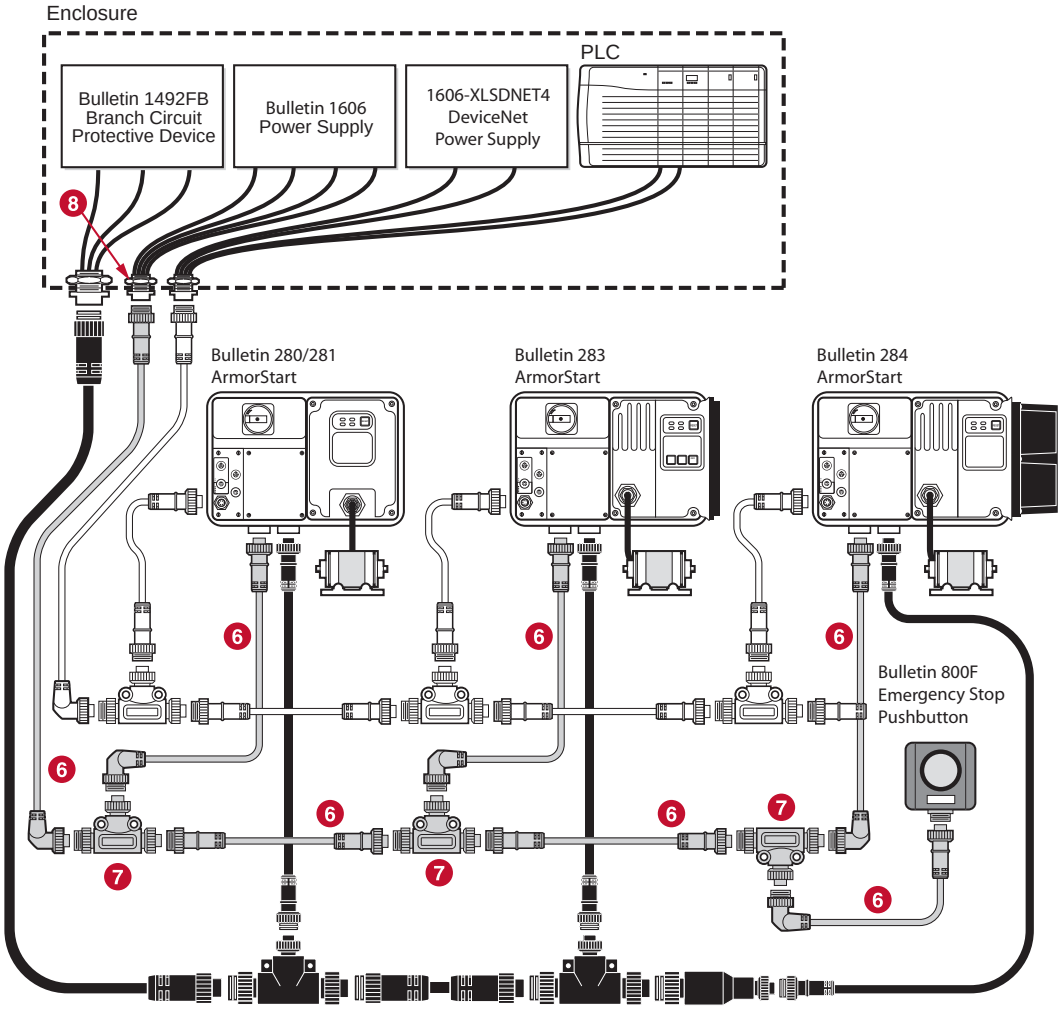

❻ Control Power Media Patchcords - Patchcord cable with integral female or male connector on each end
Example Catalog Number: 889N-F65GFNM-*

❼ Control Power Tees - The E-stop In Tee (Catalog Number: 898N-653ST-NKF) is used to connect to the Bulletin 800F On-Machine E-stop station using a control power media patchcord. The E-stop Out tee (Catalog Number: 898N-653ES-NKF) is used with cordset or patchcord to connect to the ArmorStart distributed motor controller.

❽ Control Power Receptacles - Female receptacles are a panel mount connector with flying leads –
Catalog Number: 888N-D65AF1-*

On-Machine Hard-wired Stop Category 0 Station

Table 4 - Hard-wired Stop

1 Hole Yellow Enclosure E-stop Station						
Enclosure Type	**Quick Connect**	**Knockout Type**	**Operator**	**Illumination Voltage**	**Contact Configuration**	**Cat. No.**
Plastic	Mini Receptacle	Metric	Twist to Release	24V AC/DC	1 NC/1 NO	800F-1YMQ4
				120V AC		800F-1YMQ5
				240V AC		800F-1YMQ6
Metal				24V AC/DC		800F-1MYMQ4
				120V AC		800F-1MYMQ5
				240V AC		800F-1MYMQ6

800F-1YMQ* 800F-1MYMQ*

E-stop Circuit

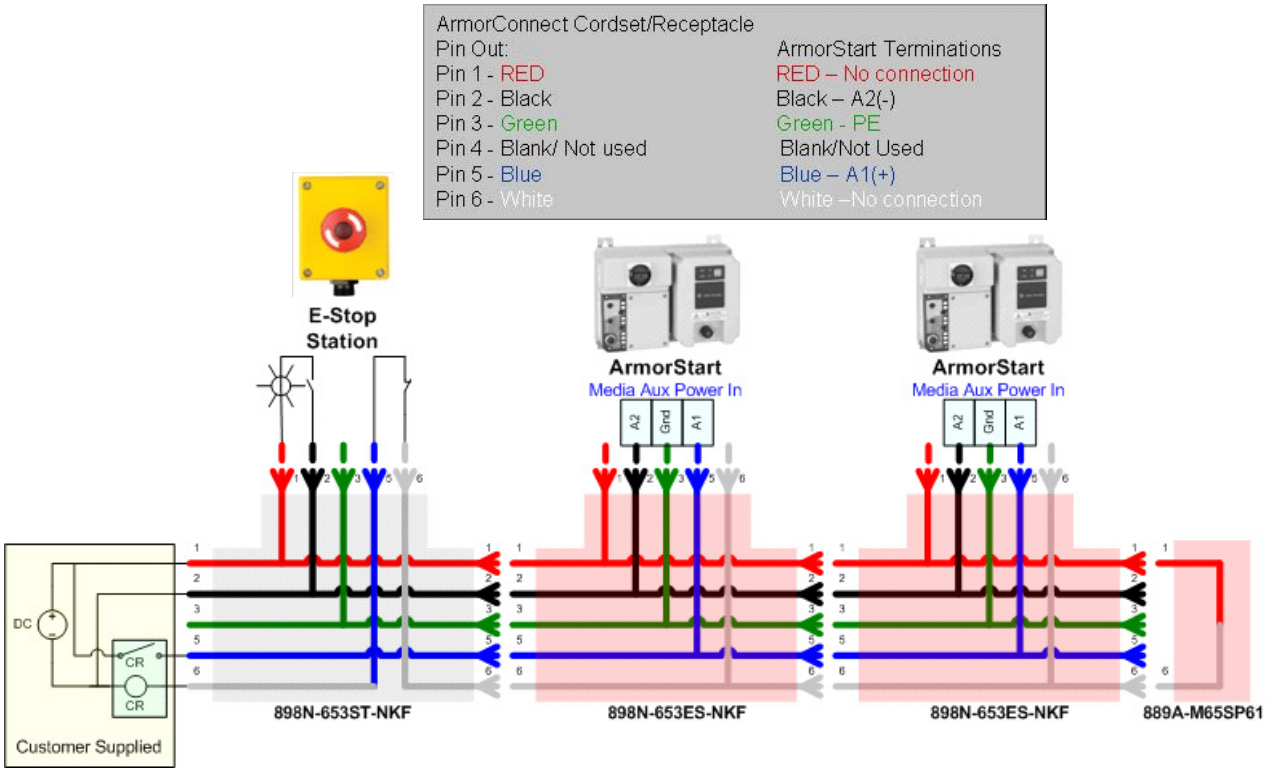

Auxiliary Power is based on a 4–pin connector system and is used to provide 24V DC power to I/O modules and other devices separately from network power. Running separate power to these devices is typically used for I/O devices with output connections to prevent power supply interruption due to switching of outputs.

Figure 27 - Control Power Media System Overview using Auxiliary Power Tee Adapter

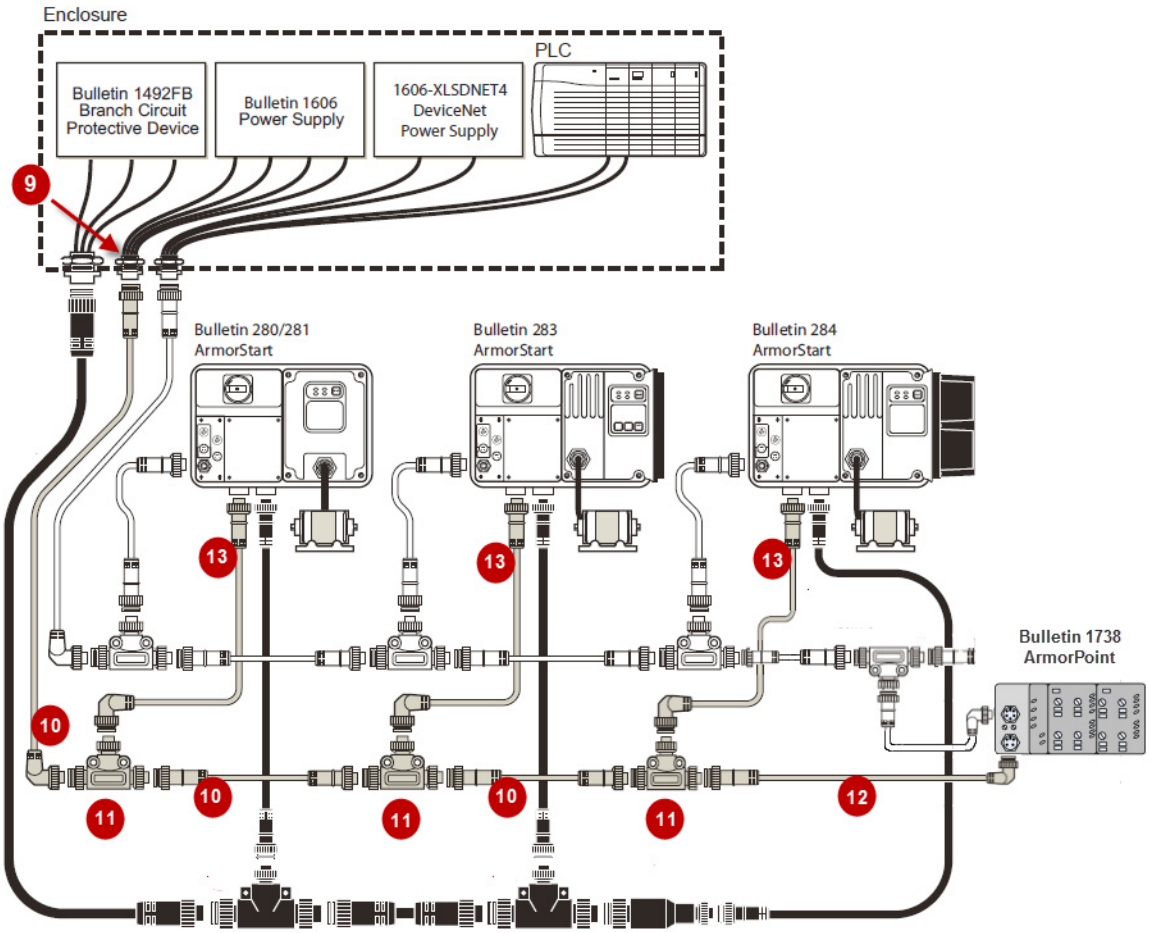

❾ Bulkhead pass-thru connectors are passive male to female 4-pin mini-connectors within a threaded metal housing used for Auxiliary Power - Catalog Number 889A-CXN4-M4

❿ Auxiliary power trunk cables are four-pin mini-style patchcords. - Catalog Number 889N-F4HKNM-* (Straight Female to Straight Male)

⓫ ArmorStart auxiliary adapter power tees allow connecting devices to the power trunk line using an associated power drop cordset - Catalog Number 898N-543ES-NKF

⓬ Auxiliary power drop cable - Catalog number 889D-R4HJDM-* (18 AWG wire Right Female to Straight Male)

⓭ Control Power Media Patchcords - Example Catalog Number: 889N-F65GFNM-*

Figure 28 - Interconnect Diagram

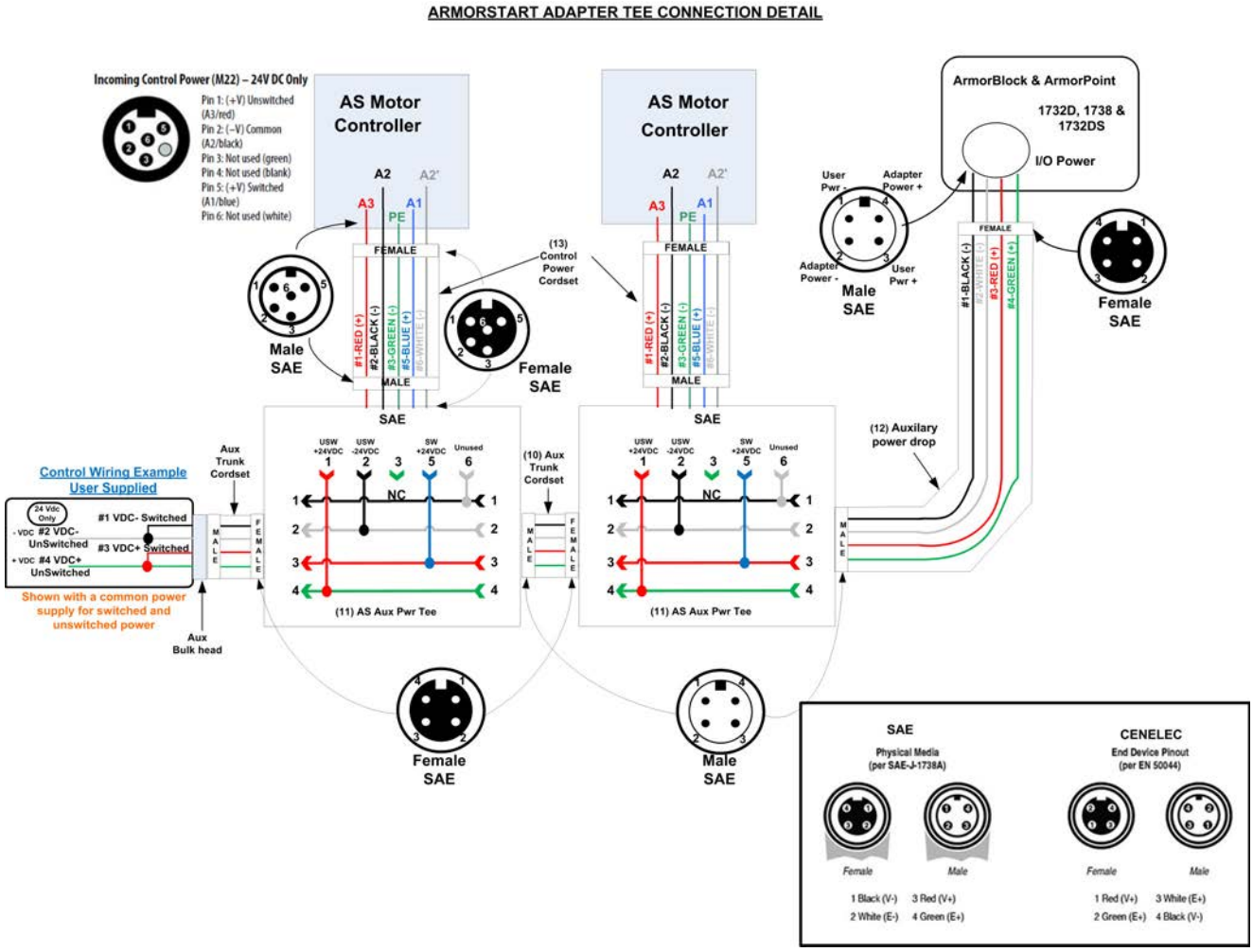

ArmorStart with ArmorConnect Connectivity

ArmorStart devices with 10 A short circuit protection rating

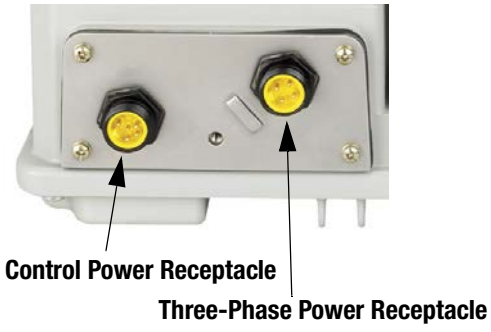

ArmorStart devices with 25 A short circuit protection rating

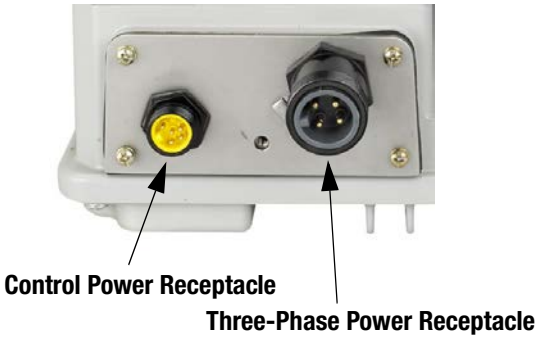

Installing ArmorConnect Power Media using CordSets

Cord Grips for ArmorStart Devices with 10 A short circuit protection rating

Cord Grips for ArmorStart Devices with 25 A short circuit protection rating

Terminal Designations	Description	Color Code
A1 (+)	Control Power Input	Blue
A2 (-)	Control Power Common	Black
PE	Ground	Green/Yellow
1/L1	Line Power - Phase A	Black
2/L2	Line Power - Phase B	White
3/L3	Line Power - Phase C	Red

ArmorConnect Cable Ratings

The ArmorConnect power media cables are rated per UL Type TC 600V 90 °C Dry 75 °C Wet, Exposed Run (ER) or MTW 600V 90 °C or STOOW 105 °C 600V - CSA STOOW 600V FT2.

Branch Circuit Protection Requirements for ArmorConnect Three-Phase Power Media

When using ArmorConnect three-phase power media, only fuses can be used for the motor branch circuit protective device, for the group motor installations. The following fuse types are recommended: Class CC, T, or J type fuses.

Maximum Ratings				
Voltage (V)	480Y/277	480/480	600Y/347	600/600
Sym. Amps RMS	65 kA	65 kA	65 kA	65 kA
Time Delay Fuse	50 A	30 A	30 A	30 A
Non-Delay Fuse	100 A	60 A	60 A	60 A

AC Supply Considerations for Bulletin 284 units

Ungrounded and High Resistive Distribution Systems

ATTENTION: The Bulletin 284 contains protective MOVs that are referenced to ground. These devices should be disconnected if the Bulletin 284 is installed on an ungrounded and high resistive distribution system.

Disconnecting MOVs

To prevent drive damage, the MOVs connected to ground must be disconnected if the drive is installed on an ungrounded and high resistive distribution system where the line-to-ground voltages on any phase could exceed 125% of the nominal line-to-line voltage. To disconnect the MOVs, remove the jumper that is shown in *Figure 30 - on page 2-53*.

1. Before installing the Bulletin 284 unit, loosen the four mounting screws.
2. Unplug the starter module from the base unit by pulling the module forward.

CAUTION: Do not apply the EMI filter option to grounded or ungrounded Delta power sources. The EMI option requires a solidly grounded Wye (Y) power source (i.e. 480/277 or 400/230V AC 3 Phase). If applied to a grounded or ungrounded 480V AC Delta power source, the EMI filter will not function properly and will become damaged.

Figure 29 - Removal of Control Module

Figure 30 - Jumper Removal

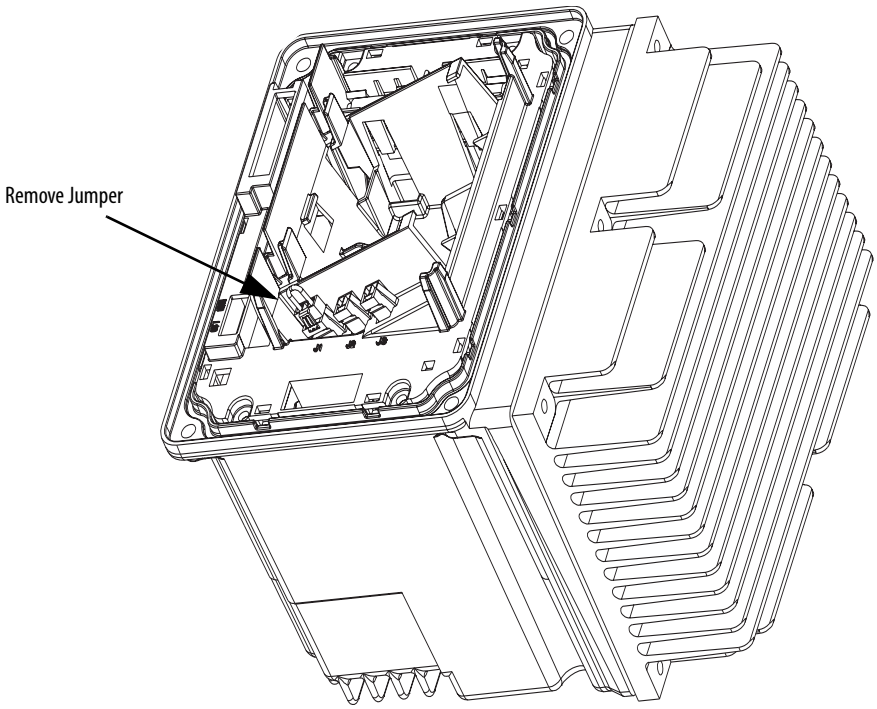

ATTENTION: Do not remove this jumper if the unit is equipped with an EMI filter installed.

Group Motor Installations for USA and Canada Markets

The ArmorStart distributed motor controllers are listed for use with each other in group installations per NFPA 79, Electrical Standard for Industrial Machinery. When applied according to the group motor installation requirements, two or more motors, of any rating or controller type, are permitted on a single branch circuit. Group Motor Installation has been successfully used for many years in the USA and Canada.

Wiring and Workmanship Guidelines

In addition to conduit and seal-tite raceway, it is acceptable to utilize cable that is dual rated Tray Cable, Type TC-ER and Cord, STOOW, for power and control wiring on ArmorStart installations. In the USA and Canada installations, the following guidance is outlined by the NEC and NFPA 79.

In industrial establishments where the conditions of maintenance and supervision ensure that only qualified persons service the installation, and where the exposed cable is continuously supported and protected against physical damage using mechanical protection, such as struts, angles, or channels, Type TC tray cable that complies with the crush and impact requirements of Type MC (Metal Clad) cable and is identified for such use with the marking Type TC-ER (Exposed Run)* shall be permitted between a cable tray and the utilization equipment or device as open wiring. The cable shall be secured at intervals not exceeding 1.8 m (6 ft) and installed in a “good workman-like” manner. Equipment grounding for the utilization equipment shall be provided by an equipment grounding conductor within the cable.

*Historically, cable meeting these crush and impact requirements was designated and marked “Open Wiring”. Cable so marked is equivalent to the present Type TC-ER and can be used.

While the ArmorStart is intended for installation in factory floor environments of industrial establishments, the following must be considered when locating the ArmorStart in the application: Cables, including those for control voltage including 24V DC and communications, are not to be exposed to an operator or building traffic on a continuous basis. Location of the ArmorStart to minimize exposure to continual traffic is recommended. If location to minimize traffic flow is unavoidable, other barriers to minimize inadvertent exposure to the cabling should be considered. Routing cables should be done in such a manner to minimize inadvertent exposure and/or damage.

Additionally, if conduit or other raceways are not used, it is recommended that strain relief fittings be used when installing the cables for the control and power wiring through the conduit openings.

The working space around the ArmorStart may be minimized as the ArmorStart does not require examination, adjustment, servicing, or maintenance while energized. In lieu of this service, the ArmorStart is meant to be unplugged and replaced after proper lockout/tag-out procedures have been employed.

Since the ArmorStart is available with a factory installed HOA keypad option this may require the ArmorStart to be selected and installed as follows if the application requires frequent use of the hand operated interface by the equipment operator:

1. They are not less than 0.6 m (2 ft) above the servicing level and are within easy reach of the normal working position of the operator.
2. The operator is not placed in a hazardous situation when operating them.
3. The possibility of inadvertent operation is minimized.

If the operated interface is used in industrial establishments where the conditions of maintenance and supervision ensure that only qualified persons operate and service the ArmorStart's operator interface, and the installation is located so that inadvertent operation is minimized then other installation locations with acceptable access can be provided.

DeviceNet Network Installation

The ArmorStart distributed motor controller contains the equivalent of 0.76 m (30 in.) of DeviceNet drop cable's electrical characteristics and therefore 0.76 m (30 in.) of drop cable must be included in the DeviceNet drop cable budget for each ArmorStart in addition to actual drop cable required for the installation.

Other DeviceNet System Design Considerations

The separation of the control power and DeviceNet power is recommended as a good design practice. This minimizes the load on the DeviceNet supply, and prevents transients that may be present on the control power system from influencing the communication controls. For additional information regarding 24V DC control power system design, see *Appendix E*.

Electromagnetic Compatibility

The following guidelines are provided for Electromagnetic Compatibility (EMC) installation compliance.

General Notes (Bulletin 284 only)

- The motor Cable should be kept as short as possible to avoid electromagnetic emission and also capacitive currents
- Conformity of the drive with CE EMC requirements does not guarantee an entire machine installation complies with CE EMC requirements. Many factors can influence total machine/installation compliance.

- Using an EMI filter with any drive rating, may result in relatively high ground leakage currents. Therefore, the filter must only be used in installations and solidly grounded (bonded) to the building power distribution ground. Grounding must not rely on flexible cables and should exclude any form of plug or socket that would permit inadvertent disconnection. Some local codes may require redundant ground connections. The integrity of all connections should be periodically checked.

- When using a shielded motor cable the drain wire should be bonded to chassis ground at the motor. The recommended motor connection should use a shielded concentric connector. This provides 360° shielding. A single point connection can be used but is less effective. A point connection attaches the motor ground and shield to the chassis.

Grounding

Connect a grounding conductor to the terminal provided as standard on each ArmorStart distributed motor controller. See Table 3 - for grounding provision location. This terminal ground connection by itself is generally sufficient for U.S. installations. Again, some local codes may require redundant ground connections.

There is also an externally available ground terminal. The external ground post and plate is at the same potential as the chassis ground which also connected to the internal ground terminals. European installations require this redundant ground connection. See Installation and Wiring section for location details.

Motor Cable Considerations

Most recommendations regarding drive cable address issues are caused by the nature of the drive output. A PWM drive creates AC motor current by sending DC voltage pulses to the motor in a specific pattern. These pulses affect the wire insulation and can be a source of electrical noise. The rise time, amplitude, and frequency of these pulses must be considered when choosing a wire/cable type. The choice of cable must consider:

1. The effects of the drive output once the cable is installed
2. The need for the cable to contain noise that is caused by the drive output
3. The amount of cable charging current available from the drive
4. Possible voltage drop (and subsequent loss of torque) for long wire runs

Keep the motor cable lengths less than 13.7 m (45 ft) from the ArmorStart LT.

Unshielded Cable

Properly designed multi-conductor cables can provide better performance in wet applications, significantly reduce voltage stress on wire insulation, and reduce cross coupling between drives.

The use of cables without shielding is generally acceptable for installations where electrical noise created by the drive does not interfere with the operation of other devices such as: communications cards, photoelectric switches, weigh scales, and others. Be certain the installation does not require shielded cable to meet specific EMC standards for CE, C-Tick, or FCC. Cable specifications depend on the installation type.

Figure 31 - Unshielded Multi-Conductor Cable

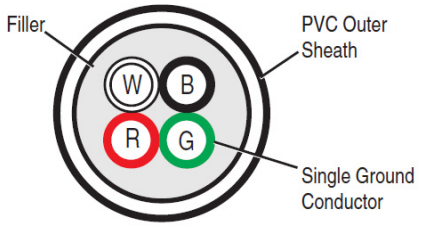

Shielded Cable

Shielded cable contains all of the general benefits of multi-conductor cable with the added benefit of a copper braided shield that can contain much of the noise that is generated by a typical AC Drive. Strong consideration for shielded cable should be given for installations with sensitive equipment such as weigh scales, capacitive proximity switches, and other devices that may be affected by electrical noise in the distribution system. Applications with large numbers of drives in a similar location, imposed EMC regulations, or a high degree of communications/networking are also good candidates for shielded cable.

An acceptable shielded cable has 4 XLPE insulated conductors with a 100% coverage foil and an 85% coverage copper braided shield (with drain wire) surrounded by a PVC jacket.

Figure 32 - Shielded Cable with Four Conductors

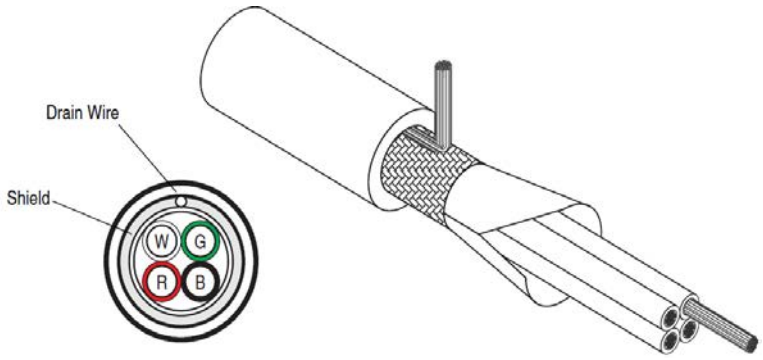

Recommended Cable Connectors/Glands

Choose cable connectors or glands that offer the best cable protection, shield termination, and ground contact.

Recommended Cord Grips

Figure 33 - Cord Grips for ArmorStart Devices with 10 A Short Circuit Protection Rating

Figure 34 - Cord Grips for ArmorStart Devices with 25 A Short Circuit Protection Rating

Shield Terminating Connectors

The cable connector that is selected must provide good 360° contact and low transfer impedance from the shield or armor of the cable to the conduit entry plate at both the motor and the ArmorStart LT for electrical bonding. SKINTOP® MS-SC/MS-SCL cable grounding connectors and NPT/PG adapters from LAPPUSA are good examples of this type of shield terminating gland.

Figure 35 - Terminating the Shield with a Connector

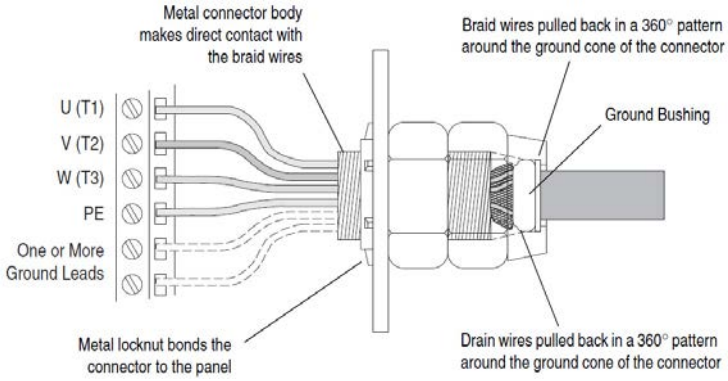

ATTENTION: Shielded connector or motor cable is mandatory for CE compliant installations

Wiring

Wire in an industrial control application can be divided into three groups: power, control, and signal. The following recommendations for physical separation between these groups is provided to reduce the coupling effect.

- Minimum spacing between different wire groups in the same tray should be 16 cm (6 in.).
- Wire runs outside an enclosure should be run in conduit or have shielding/armor with equivalent attenuation.
- Different wire groups should be run in separate conduits.
- Minimum spacing between conduits containing different wire groups should be 8 cm (3 in.).

Maintenance

ArmorStart does not require regular maintenance. A few checks are needed to ensure continued proper operation. For Bulletin 284 ensure the heatsink if free from obstructions to allow good airflow. Bulletin 284 also includes an internal circulating fan to support heat conduction in high ambient applications. This fan operates with control power and cannot be controlled by any other means. If the fan were to slow down to a minimum RPM, the 284 will fault. This fault is displayed as a Hardware Fault F14. Parameter 61, Last Pr Fault indicates a FAN RPM fault. This fault can be reset* and the unit will continue to operate normally for 24 hours that should allow time to schedule preventive maintenance. After 24 hours a fault will occur. Replace the fan with PN 284-FAN. See *Chapter 12, Hardware Fault - Fan RPM Warning* for information regarding the monitoring of the Fan RPM.

*284 Firmware 66.21, prior levels require the fan to be replaced before restarting.

Notes:

Bulletin 280, 281 Programmable Parameters

Introduction

This chapter describes each programmable parameter and its function.

Parameter Programming

Each distributed motor controller type has a common set of parameters followed by a set of parameters that pertain to the individual starter type.

See *Chapter 7, DeviceNet Commissioning* for instructions in using RSNetWorx™ for DeviceNet to modify parameter settings.

IMPORTANT	Resetting the Factory Default Values Parameter 47, Set to Defaults, allows the installer to reset all parameters to the factory default values. It also resets the MAC ID to its factory default after DeviceNet Power is cycled if switches are set >63.

IMPORTANT	Parameter setting changes downloaded to the ArmorStart take effect immediately, even during a “running” status.

IMPORTANT	Parameter setting changes made in a configuration tool such as RSNetWorx for DeviceNet do not take effect in the ArmorStart until the installer applies or downloads the new settings to the device.

Parameter Group Listing

The Bulletin 280, 281 ArmorStart contains eight parameter groups. The parameters that are shown in the DeviceLogix, DeviceNet, Starter Protection, User I/O, Misc. Parameter, ZIP Parameters, Starter Display, and Starter Setup, are discussed in this chapter.

Table 6 - Parameter Group Listing

DeviceLogix	DeviceNet	Starter Protection	User I/O	Misc.	ZIP Parameters	Starter Display	Starter Setup
1 Hdw Inputs	**10** Autobaud Enable	**22** Breaker Type	**30** Off-to-On Delay	**45** Keypad Mode	**67** AutoRun Zip	**101** Phase A Current	**106** FLA Setting
2 Network Inputs	**11** Consumed IO Assy	**23** PrFltResetMode	**31** On-to-Off Delay	**46** Keypad Disable	**68** Zone Produced EPR	**102** Phase B Current	**107** Overload Class
3 Network Outputs	**12** Produced IO Assy	**24** Pr Fault Enable	**32** In Sink/Source	**47** Set To Defaults	**69** Zone Produced PIT	**103** Phase C Current	**108** OL Reset Level
4 Trip Status	**13** Prod Assy Word 0	**25** Pr Fault Reset	**33** OutA Pr FltState	**56** Base Enclosure	**70** Zone #1 MacId	**104** Average Current	
5 Starter Status	**14** Prod Assy Word 1	**26** StrtrDN FltState	**34** OutA Pr FltValue	**57** Base Option	**71** Zone #2 MacId	**105**% Therm Utilized	
6 DNet Status	**15** Prod Assy Word 2	**27** StrtrDN FltValue	**35** OutA DN FltState	**58** Wiring Option	**72** Zone #3 MacId		
7 Starter Command	**16** Prod Assy Word 3	**28** StrtrDN IdlState	**36** OutA DN FltValue	**59** Starter Enclosure	**73** Zone #4 MacId		
8 Network Override	**17** Consumed IO Size	**29** StrtrDN IdlValue	**37** OutA DN IdlState	**60** Starter Options	**74** Zone #1 Health		
9 Comm Override	**18** Produced IO Size	**61** Last PR Fault	**38** OutA DN IdlValue		**75** Zone #2 Health		
	19 Starter COS Mask	**62** Warning Status	**39** OutB Pr FltState		**76** Zone #3 Health		
	20 Net Out COS Mask		**40** OutB Pr FltValue		**77** Zone #4 Health		
	21 DNet Voltage		**41** OutB DN FltState		**78** Zone #1 Mask		
			42 OutB DN FltValue		**79** Zone #2 Mask		
			43 OutB DN IdlState		**80** Zone #3 Mask		
			44 OutB DN IdlValue		**81** Zone #4 Mask		
					82 Zone #1 Offset		
					83 Zone #2 Offset		
					84 Zone #3 Offset		
					85 Zone #4 Offset		
					86 Zone #1 EPR		
					87 Zone #2 EPR		
					88 Zone #3 EPR		
					89 Zone #4 EPR		
					90 Zone #1 Control		
					91 Zone #2 Control		
					92 Zone #3 Control		
					93 Zone #4 Control		
					94 Zone #1 Key		
					95 Zone #2 Key		
					96 Zone #3 Key		
					97 Zone #4 Key		
					98 Device Value Key		
					99 Zone Ctrl Enable		

DeviceLogix Group

Hdw Inputs	Parameter Number	1
This parameter provides status of hardware inputs	Access Rule	GET
	Data Type	WORD
	Group	DeviceLogix
	Units	—
	Minimum Value	0
	Maximum Value	15
	Default Value	0

Bit				Function
3	2	1	0	
—	—	—	X	Input 0
—	—	X	—	Input 1
—	X	—	—	Input 2
X	—	—	—	Input 3

Network Inputs	Parameter Number	2
This parameter provides status of network inputs	Access Rule	GET
	Data Type	WORD
	Group	DeviceLogix
	Units	—
	Minimum Value	0
	Maximum Value	65535
	Default Value	0

Bit																**Function**
15	**14**	**13**	**12**	**11**	**10**	**9**	**8**	**7**	**6**	**5**	**4**	**3**	**2**	**1**	**0**	
—	—	—	—	—	—	—	—	—	—	—	—	—	—	—	X	Net Input 0
—	—	—	—	—	—	—	—	—	—	—	—	—	—	X	—	Net Input 1
—	—	—	—	—	—	—	—	—	—	—	—	—	X	—	—	Net input 2
—	—	—	—	—	—	—	—	—	—	—	—	X	—	—	—	Net Input 3
—	—	—	—	—	—	—	—	—	—	—	X	—	—	—	—	Net Input 4
—	—	—	—	—	—	—	—	—	—	X	—	—	—	—	—	Net Input 5
—	—	—	—	—	—	—	—	—	X	—	—	—	—	—	—	Net Input 6
—	—	—	—	—	—	—	—	X	—	—	—	—	—	—	—	Net Input 7
—	—	—	—	—	—	—	X	—	—	—	—	—	—	—	—	Net Input 8
—	—	—	—	—	—	X	—	—	—	—	—	—	—	—	—	Net Input 9
—	—	—	—	—	X	—	—	—	—	—	—	—	—	—	—	Net Input 10
—	—	—	—	X	—	—	—	—	—	—	—	—	—	—	—	Net Input 11
—	—	—	X	—	—	—	—	—	—	—	—	—	—	—	—	Net Input 12
—	—	X	—	—	—	—	—	—	—	—	—	—	—	—	—	Net Input 13
—	X	—	—	—	—	—	—	—	—	—	—	—	—	—	—	Net Input 14
X	—	—	—	—	—	—	—	—	—	—	—	—	—	—	—	Net Input 15

Network Outputs This parameter provides status of network outputs	Parameter Number	3
	Access Rule	GET
	Data Type	WORD
	Group	DeviceLogix
	Units	—
	Minimum Value	0
	Maximum Value	32767
	Default Value	0

Bit															**Function**
14	**13**	**12**	**11**	**10**	**9**	**8**	**7**	**6**	**5**	**4**	**3**	**2**	**1**	**0**	
—	—	—	—	—	—	—	—	—	—	—	—	—	—	X	Net Output 0
—	—	—	—	—	—	—	—	—	—	—	—	—	X	—	Net Output 1
—	—	—	—	—	—	—	—	—	—	—	—	X	—	—	Net Output 2
—	—	—	—	—	—	—	—	—	—	—	X	—	—	—	Net Output 3
—	—	—	—	—	—	—	—	—	—	X	—	—	—	—	Net Output 4
—	—	—	—	—	—	—	—	—	X	—	—	—	—	—	Net Output 5
—	—	—	—	—	—	—	—	X	—	—	—	—	—	—	Net Output 6
—	—	—	—	—	—	—	X	—	—	—	—	—	—	—	Net Output 7
—	—	—	—	—	—	X	—	—	—	—	—	—	—	—	Net Output 8
—	—	—	—	—	X	—	—	—	—	—	—	—	—	—	Net Output 9
—	—	—	—	X	—	—	—	—	—	—	—	—	—	—	Net Output 10
—	—	—	X	—	—	—	—	—	—	—	—	—	—	—	Net Output 11
—	—	X	—	—	—	—	—	—	—	—	—	—	—	—	Net Output 12
—	X	—	—	—	—	—	—	—	—	—	—	—	—	—	Net Output 13
X	—	—	—	—	—	—	—	—	—	—	—	—	—	—	Net Output 14

Trip Status This parameter provides trip identification	Parameter Number	4
	Access Rule	GET
	Data Type	WORD
	Group	DeviceLogix Setup
	Units	—
	Minimum Value	0
	Maximum Value	16383
	Default Value	0

Bit														**Function**
13	**12**	**11**	**10**	**9**	**8**	**7**	**6**	**5**	**4**	**3**	**2**	**1**	**0**	
—	—	—	—	—	—	—	—	—	—	—	—	—	X	Short Circuit
—	—	—	—	—	—	—	—	—	—	—	—	X	—	Overload
—	—	—	—	—	—	—	—	—	—	—	X	—	—	Phase Loss
—	—	—	—	—	—	—	—	—	—	X	—	—	—	Reserved
—	—	—	—	—	—	—	—	—	X	—	—	—	—	Reserved
—	—	—	—	—	—	—	—	X	—	—	—	—	—	Control Power
—	—	—	—	—	—	—	X	—	—	—	—	—	—	I/O Fault
—	—	—	—	—	—	X	—	—	—	—	—	—	—	Over Temperature
—	—	—	—	—	X	—	—	—	—	—	—	—	—	Phase Imbalance
—	—	—	—	X	—	—	—	—	—	—	—	—	—	Dnet Power Loss
—	—	—	X	—	—	—	—	—	—	—	—	—	—	Reserved
—	—	X	—	—	—	—	—	—	—	—	—	—	—	Reserved
—	X	—	—	—	—	—	—	—	—	—	—	—	—	EEprom
X	—	—	—	—	—	—	—	—	—	—	—	—	—	HW Fault

Starter Status This parameter provides the status of the starter	Parameter Number	5
	Access Rule	GET
	Data Type	WORD
	Group	DeviceLogix
	Units	—
	Minimum Value	0
	Maximum Value	16383
	Default Value	0

Bit														**Function**
13	**12**	**11**	**10**	**9**	**8**	**7**	**6**	**5**	**4**	**3**	**2**	**1**	**0**	
—	—	—	—	—	—	—	—	—	—	—	—	—	X	Tripped
—	—	—	—	—	—	—	—	—	—	—	—	X	—	Warning
—	—	—	—	—	—	—	—	—	—	—	X	—	—	Running Fwd
—	—	—	—	—	—	—	—	—	—	X	—	—	—	Running Rev
—	—	—	—	—	—	—	—	—	X	—	—	—	—	Ready
—	—	—	—	—	—	—	—	X	—	—	—	—	—	Net Ctl Status
—	—	—	—	—	—	—	X	—	—	—	—	—	—	Reserved
—	—	—	—	—	—	X	—	—	—	—	—	—	—	At Reference
—	—	—	—	—	X	—	—	—	—	—	—	—	—	Reserved
—	—	—	—	X	—	—	—	—	—	—	—	—	—	Reserved
—	—	—	X	—	—	—	—	—	—	—	—	—	—	Reserved
—	—	X	—	—	—	—	—	—	—	—	—	—	—	Keypad Hand
—	X	—	—	—	—	—	—	—	—	—	—	—	—	HOA Status
X	—	—	—	—	—	—	—	—	—	—	—	—	—	140M On

DNet Status This parameter provides status of the DeviceNet connection	Parameter Number	6
	Access Rule	GET
	Data Type	WORD
	Group	DeviceLogix
	Units	—
	Minimum Value	0
	Maximum Value	32, 767
	Default Value	0

Bit																**Function:**
15	**14**	**13**	**12**	**11**	**10**	**9**	**8**	**7**	**6**	**5**	**4**	**3**	**2**	**1**	**0**	
—	—	—	—	—	—	—	—	—	—	—	—	—	—	—	X	Explicit Connection
—	—	—	—	—	—	—	—	—	—	—	—	—	—	X	—	I/O Connection
—	—	—	—	—	—	—	—	—	—	—	—	—	X	—	—	Explicit Fault
—	—	—	—	—	—	—	—	—	—	—	—	X	—	—	—	I/O Fault
—	—	—	—	—	—	—	—	—	—	—	X	—	—	—	—	I/O Idle
—	—	—	—	—	—	—	—	X	X	X	—	—	—	—	—	Reserved
—	—	—	—	—	—	—	X	—	—	—	—	—	—	—	—	ZIP 1 Cnxn
—	—	—	—	—	—	X	—	—	—	—	—	—	—	—	—	ZIP 1 Flt
—	—	—	—	—	X	—	—	—	—	—	—	—	—	—	—	ZIP 2 Cnxn
—	—	—	—	X	—	—	—	—	—	—	—	—	—	—	—	ZIP 2 Flt
—	—	—	X	—	—	—	—	—	—	—	—	—	—	—	—	ZIP 3 Cnxn
—	—	X	—	—	—	—	—	—	—	—	—	—	—	—	—	ZIP 3 Flt
—	X	—	—	—	—	—	—	—	—	—	—	—	—	—	—	ZIP 4 Cnxn
X	—	—	—	—	—	—	—	—	—	—	—	—	—	—	—	ZIP 4 Flt

Starter Command The parameter provides the status of the starter command.	Parameter Number	7
	Access Rule	GET
	Data Type	WORD
	Group	DeviceLogix
	Units	—
	Minimum Value	0
	Maximum Value	255
	Default Value	0

Bit								**Function:**
7	**6**	**5**	**4**	**3**	**2**	**1**	**0**	
—	—	—	—	—	—	—	X	Run Fwd
—	—	—	—	—	—	X	—	Run Rev
—	—	—	—	—	X	—	—	Fault Reset
—	—	—	—	X	—	—	—	Reserved
—	—	—	X	—	—	—	—	Reserved
—	—	X	—	—	—	—	—	Reserved
—	X	—	—	—	—	—	—	User Out A
X	—	—	—	—	—	—	—	User Out B

Network Override This parameter allows for the local logic to override a Network fault 0 = Disable 1 = Enable	Parameter Number	8
	Access Rule	GET/SET
	Data Type	BOOL
	Group	DeviceLogix
	Units	—
	Minimum Value	0
	Maximum Value	1
	Default Value	0

Comm Override This parameter allows for local logic to override the absence of an I/O connection 0 = Disable 1 = Enable	Parameter Number	9
	Access Rule	GET/SET
	Data Type	BOOL
	Group	DeviceLogix
	Units	—
	Minimum Value	0
	Maximum Value	1
	Default Value	0

DeviceNet Group

Autobaud Enable	Parameter Number	10
When this parameter is enabled, the device attempts to determine the network baud rate and set its baud rate to the same, provided network traffic exists. At least one node with an established baud rate must exist on the network for autobaud to occur. 0 = Disable 1 = Enable	Access Rule	GET/SET
	Data Type	BOOL
	Group	DeviceNet
	Units	—
	Minimum Value	0
	Maximum Value	1
	Default Value	1

Consumed I/O Assy	Parameter Number	11
This parameter selects the format of the I/O data consumed. Enter a Consumed I/O assembly instance number to select a data format.	Access Rule	GET/SET
	Data Type	USINT
	Group	DeviceNet
	Units	—
	Minimum Value	0
	Maximum Value	187
	Default Value	160

Produced I/O Assy	Parameter Number	12
This parameter selects the format of the I/O data produced. Enter a Produces I/O assembly instance number to select a data format.	Access Rule	GET/SET
	Data Type	USINT
	Group	DeviceNet
	Units	—
	Minimum Value	0
	Maximum Value	190
	Default Value	161

Prod Assy Word 0	Parameter Number	13
This parameter is used to build bytes 0-1 for produced assembly 120	Access Rule	GET/SET
	Data Type	USINT
	Group	DeviceNet
	Units	—
	Minimum Value	0
	Maximum Value	108
	Default Value	1

Produced Assy Word 1 This parameter is used to build bytes 2-3 for produced assembly 120	Parameter Number	14
	Access Rule	GET/SET
	Data Type	USINT
	Group	DeviceNet
	Units	—
	Minimum Value	0
	Maximum Value	108
	Default Value	4

Prod Assy Word 2 This parameter is used to build bytes 4-5 for produced assembly 120	Parameter Number	15
	Access Rule	GET/SET
	Data Type	USINT
	Group	DeviceNet
	Units	—
	Minimum Value	0
	Maximum Value	108
	Default Value	5

Prod Assy Word 3 This parameter is used to build bytes 6-7 for produced assembly 120	Parameter Number	16
	Access Rule	GET/SET
	Data Type	USINT
	Group	DeviceNet
	Units	—
	Minimum Value	0
	Maximum Value	108
	Default Value	6

Consumed I/O Size This parameter reflects the consumed I/O data size in bytes.	Parameter Number	17
	Access Rule	GET
	Data Type	USINT
	Group	DeviceNet
	Units	—
	Minimum Value	0
	Maximum Value	8
	Default Value	1

Produced I/O Size This parameter reflects the produced I/O data size in bytes.	Parameter Number	18
	Access Rule	GET
	Data Type	USINT
	Group	DeviceNet
	Units	—
	Minimum Value	0
	Maximum Value	8
	Default Value	2

Starter COS Mask This parameter allows the installer to define the change-of-state conditions that results in a change-of-state message being produced	Parameter Number	19
	Access Rule	GET/SET
	Data Type	WORD
	Group	DeviceNet
	Units	—
	Minimum Value	0
	Maximum Value	16383
	Default Value	16149 ❶ 16157 ❷

❶ Bulletin 280 products.
❷ Bulletin 281 products.

Bit														**Function**
13	**12**	**11**	**10**	**9**	**8**	**7**	**6**	**5**	**4**	**3**	**2**	**1**	**0**	
—	—	—	—	—	—	—	—	—	—	—	—	—	X	Tripped
—	—	—	—	—	—	—	—	—	—	—	—	X	—	Warning
—	—	—	—	—	—	—	—	—	—		X	—	—	Running Fwd
—	—	—	—	—	—	—	—	—	—	X	—	—	—	Running Rev
—	—	—	—	—	—	—	—	—	X	—	—	—	—	Ready
—	—	—	—	—	—	—	—	X	—	—	—	—	—	Reserved
—	—	—	—	—	—	—	X	—	—	—	—	—	—	Reserved
—	—	—	—	—	—	X	—	—	—	—	—	—	—	Reserved
—	—	—	—	—	X	—	—	—	—	—	—	—	—	Input 0
—	—	—	—	X	—	—	—	—	—	—	—	—	—	Input 1
—	—	—	X	—	—	—	—	—	—	—	—	—	—	Input 2
—	—	X	—	—	—	—	—	—	—	—	—	—	—	Input 3
—	X	—	—	—	—	—	—	—	—	—	—	—	—	HOA Status
X	—	—	—	—	—	—	—	—	—	—	—	—	—	140M On

Net Out COS Mask This parameter sets the bits that triggers a COS message when network outputs change state.	Parameter Number	20
	Access Rule	GET/SET
	Data Type	WORD
	Group	DeviceNet
	Units	—
	Minimum Value	0
	Maximum Value	32767
	Default Value	0

Bit															**Function**
14	**13**	**12**	**11**	**10**	**9**	**8**	**7**	**6**	**5**	**4**	**3**	**2**	**1**	**0**	
—	—	—	—	—	—	—	—	—	—	—	—	—	—	X	Net Output 0
—	—	—	—	—	—	—	—	—	—	—	—	—	X	—	Net Output 1
—	—	—	—	—	—	—	—	—	—	—	—	X	—	—	Net Output 2
—	—	—	—	—	—	—	—	—	—	—	X	—	—	—	Net Output 3
—	—	—	—	—	—	—	—	—	—	X	—	—	—	—	Net Output 4
—	—	—	—	—	—	—	—	—	X	—	—	—	—	—	Net Output 5
—	—	—	—	—	—	—	—	X	—	—	—	—	—	—	Net Output 6
—	—	—	—	—	—	—	X	—	—	—	—	—	—	—	Net Output 7
—	—	—	—	—	—	X	—	—	—	—	—	—	—	—	Net Output 8
—	—	—	—	—	X	—	—	—	—	—	—	—	—	—	Net Output 9
—	—	—	—	X	—	—	—	—	—	—	—	—	—	—	Net Output 10
—	—	—	X	—	—	—	—	—	—	—	—	—	—	—	Net Output 11
—	—	X	—	—	—	—	—	—	—	—	—	—	—	—	Net Output 12
—	X	—	—	—	—	—	—	—	—	—	—	—	—	—	Net Output 13
X	—	—	—	—	—	—	—	—	—	—	—	—	—	—	Net Output 14

Dnet Voltage This parameter provides the voltage measurement for the DeviceNet network	Parameter Number	21
	Access Rule	GET
	Data Type	UINT
	Group	DeviceNet
	Units	xx.xx Volts
	Minimum Value	0
	Maximum Value	6500
	Default Value	0

Starter Protection Group

Breaker Type This parameter identifies the Bulletin 140M used in this product 0 = 140M-D8N-C10 1 = 140M-D8N-C25	Parameter Number	22
	Access Rule	GET/SET
	Data Type	BOOL
	Group	Starter Protection
	Units	—
	Minimum Value	0
	Maximum Value	1
	Default Value	0

PrFlt Reset Mode This parameter configures the Protection Fault reset mode. 0= Manual 1= Automatic	Parameter Number	23
	Access Rule	GET/SET
	Data Type	BOOL
	Group	Starter Protection
	Units	—
	Minimum Value	0
	Maximum Value	1
	Default Value	0

Pr Fault Enable This parameter enables the Protection Fault by setting the bit to 1	Parameter Number	24
	Access Rule	GET/SET
	Data Type	WORD
	Group	Starter Protection Setup
	Units	—
	Minimum Value	0
	Maximum Value	16383
	Default Value	12419

Bit														**Function**
13	**12**	**11**	**10**	**9**	**8**	**7**	**6**	**5**	**4**	**3**	**2**	**1**	**0**	
—	—	—	—	—	—	—	—	—	—	—	—	—	X	Short Circuit ❶
—	—	—	—	—	—	—	—	—	—	—	—	X	—	Overload ❶
—	—	—	—	—	—	—	—	—	—	—	X	—	—	Phase Loss
—	—	—	—	—	—	—	—	—	—	X	—	—	—	Reserved
—	—	—	—	—	—	—	—	—	X	—	—	—	—	Reserved
—	—	—	—	—	—	—	—	X	—	—	—	—	—	Control Power
—	—	—	—	—	—	—	X	—	—	—	—	—	—	I/O Fault
—	—	—	—	—	—	X	—	—	—	—	—	—	—	Over Temperature ❶
—	—	—	—	—	X	—	—	—	—	—	—	—	—	Phase Imbalance
—	—	—	—	X	—	—	—	—	—	—	—	—	—	Dnet Power Loss
—	—	—	X	—	—	—	—	—	—	—	—	—	—	Reserved
—	—	X	—	—	—	—	—	—	—	—	—	—	—	Reserved
—	X	—	—	—	—	—	—	—	—	—	—	—	—	Eeprom ❶
X	—	—	—	—	—	—	—	—	—	—	—	—	—	HW Fault ❶

❶ Cannot be disabled.

Pr Fault Reset This parameter resets the Protection Fault on a transition of 0-->1.	Parameter Number	25
	Access Rule	GET/SET
	Data Type	BOOL
	Group	Starter Protection
	Units	—
	Minimum Value	0
	Maximum Value	1
	Default Value	0

StrtrDN FltState This parameter with Parameter 27, defines how the starter responds when a DeviceNet fault occurs. When set to "1", hold to last state occurs. When set to "0", goes to DnFlt Value on DN faults as determined by Parameter 27.	Parameter Number	26
	Access Rule	GET/SET
	Data Type	BOOL
	Group	Starter Protection
	Units	—
	Minimum Value	0
	Maximum Value	1
	Default Value	0

StrtrDN FltValue This parameter determines how the starter will be commanded in the event of a Device Net fault. 0 = OFF 1 = ON	Parameter Number	27
	Access Rule	GET
	Data Type	BOOL
	Group	Starter Protection
	Units	—
	Minimum Value	0
	Maximum Value	1
	Default Value	0

StrtrDN IdlState This parameter with Parameter 29, defines how the starter responds when a DeviceNet network is idle. When set to "1", hold to last state occurs. When set to "0", goes to DnIdl Value on DN Idle as determined by Parameter 29.	Parameter Number	28
	Access Rule	GET/SET
	Data Type	BOOL
	Group	Starter Protection
	Units	—
	Minimum Value	0
	Maximum Value	1
	Default Value	0

StrtrDN IdlValue This parameter determines the state that starter assumes when the network is idle and Parameter 28 is set to "0" 0 = OFF 1 = ON	Parameter Number	29
	Access Rule	GET
	Data Type	BOOL
	Group	Starter Protection
	Units	—
	Minimum Value	0
	Maximum Value	1
	Default Value	0

Last PR Fault 0 = None 1 = Hardware Short Circuit 2 = Software Short Circuit 3 = Motor Overload 4 = Reserved 5 = Phase Loss 6 – 12 = Reserved 13 = Control Power Loss 14 = Control Power Fuse 15 = I/O Short 16 = Output Fuse 17 = Overtemp 18= Reserved 19 = Phase Imbalance 20 = Reserved 21 = DNet Power Loss 22 = Internal Comm 23-26 = Reserved 27 = MCB EEPROM 28 = Base EEPROM 29 = Reserved 30 = Wrong Base 31 = Wrong CTs 32-100 = Reserved	Parameter Number	61
	Access Rule	GET
	Data Type	UINT
	Group	Starter Protection
	Units	—
	MinimumValue	0
	Maximum Value	100
	Default Value	0

Warning Status This parameter warns the user of a condition, without faulting	Parameter Number	62
	Access Rule	GET
	Data Type	WORD
	Group	Starter Protection
	Units	—
	MinimumValue	0
	Maximum Value	65535
	Default Value	0

Bit																**Warning**
15	**14**	**13**	**12**	**11**	**10**	**9**	**8**	**7**	**6**	**5**	**4**	**3**	**2**	**1**	**0**	
—	—	—	—	—	—	—	—	—	—	—	—	—	—	—	X	reserved
—	—	—	—	—	—	—	—	—	—	—	—	—	—	X	—	reserved
—	—	—	—	—	—	—	—	—	—	—	—	—	X	—	—	Phase Loss
—	—	—	—	—	—	—	—	—	—	—	—	X	—	—	—	reserved
—	—	—	—	—	—	—	—	—	—	—	X	—	—	—	—	reserved
—	—	—	—	—	—	—	—	—	—	X	—	—	—	—	—	Control Power
—	—	—	—	—	—	—	—	—	X	—	—	—	—	—	—	IO Warning
—	—	—	—	—	—	—	—	X	—	—	—	—	—	—	—	reserved
—	—	—	—	—	—	—	X	—	—	—	—	—	—	—	—	Phase Imbalance
—	—	—	—	—	—	X	—	—	—	—	—	—	—	—	—	DeviceNet
—	—	—	—	—	X	—	—	—	—	—	—	—	—	—	—	reserved
—	—	—	—	X	—	—	—	—	—	—	—	—	—	—	—	reserved
—	—		X	—	—	—	—	—	—	—	—	—	—	—	—	reserved
—	—	X	—	—	—	—	—	—	—	—	—	—	—	—	—	Hardware
—	X	—	—	—	—	—	—	—	—	—	—	—	—	—	—	reserved
X	—	—	—	—	—	—	—	—	—	—	—	—	—	—	—	reserved

User I/O

Off-to-On Delay This parameter allows the installer to program a time duration before an input is reported “ON”	Parameter Number	30
	Access Rule	GET/SET
	Data Type	UINT
	Group	User I/O
	Units	ms
	Minimum Value	0
	Maximum Value	65.000
	Default Value	0

On-to-Off Delay This parameter allows the installer to program a time duration before an input is reported “OFF”	Parameter Number	31
	Access Rule	GET/SET
	Data Type	UINT
	Group	User I/O
	Units	ms
	Minimum Value	0
	Maximum Value	65.000
	Default Value	0

In Sink/Source This parameter allows the installer to program the inputs to be sink or source. 0=Sink 1=Source	Parameter Number	32
	Access Rule	GET/SET
	Data Type	BOOL
	Group	User I/
	Units	—
	Minimum Value	0
	Maximum Value	1
	Default Value	0

OutA Pr FltState This parameter with Parameter 34, defines how Output A responds when a protection trip occurs. When set to “1”, Output A continues to operate as command via the network. When set to “0”, Output A opens or closes as determined by setting in Parameter 34	Parameter Number	33
	Access Rule	GET/SET
	Data Type	BOOL
	Group	User I/O
	Units	—
	Minimum Value	0
	Maximum Value	1
	Default Value	0

OutA Pr FltValue This parameter determines the state the Out A assumes when a trip occurs and Parameter 33 is set to “0” 0 = Open 1 = Close	Parameter Number	34
	Access Rule	GET/SET
	Data Type	BOOL
	Group	User I/O
	Units	—
	Minimum Value	0
	Maximum Value	1
	Default Value	0

OutA DN FltState This parameter with Parameter 36, defines how Output A responds when a DeviceNet network fault occurs. When set to "1", Output A holds state before trip occurrence. When set to "0", Output A opens or closes as determined by setting in Parameter 36	Parameter Number	35
	Access Rule	GET/SET
	Data Type	BOOL
	Group	User I/O
	Units	—
	Minimum Value	0
	Maximum Value	1
	Default Value	0

OutA DN FltValue This parameter determines the state that Output A assumes when a DeviceNet network fault occurs and Parameter 35 is set to "0" 0 = Open 1 = Close	Parameter Number	36
	Access Rule	GET/SET
	Data Type	BOOL
	Group	User I/O
	Units	—
	Minimum Value	0
	Maximum Value	1
	Default Value	0

OutA DN IdlState This parameter with Parameter 38, defines how Output A responds when the DeviceNet network is idle. When set to "0", Output A opens or closes as determined by the setting in Parameter 38 The DN Flt parameters supersede the Dn Idl parameters	Parameter Number	37
	Access Rule	GET/SET
	Data Type	BOOL
	Group	User I/O
	Units	—
	Minimum Value	0
	Maximum Value	1
	Default Value	0

OutA DN IdlValue This parameter determines the state that Output A assumes when the network is idle and Parameter 37 is set to "0" 0 = Open 1 = Close	Parameter Number	38
	Access Rule	GET/SET
	Data Type	BOOL
	Group	User I/O
	Units	—
	Minimum Value	0
	Maximum Value	1
	Default Value	0

OutB Pr FltState This parameter with Parameter 40, defines how Output B responds when a protection trip occurs. When set to “1”, Output B continue to operate as command via the network. When set to “0”, Output B opens or closes as determined by setting in Parameter 40	Parameter Number	39
	Access Rule	GET/SET
	Data Type	BOOL
	Group	User I/O
	Units	—
	Minimum Value	0
	Maximum Value	1
	Default Value	0

OutB Pr FltValue This parameter determines the state the Out B assumes when a protection trip occurs and Parameter 39 is set to “0” 0 = Open 1 = Close	Parameter Number	40
	Access Rule	GET/SET
	Data Type	BOOL
	Group	User I/O
	Units	—
	Minimum Value	0
	Maximum Value	1
	Default Value	0

OutB DN FltState This parameter with Parameter 42, defines how Output B responds when a DeviceNet network fault occurs. When set to “1”, Output B holds state before trip occurrence. When set to “0”, Output B opens or closes as determined by setting in Parameter 42	Parameter Number	41
	Access Rule	GET/SET
	Data Type	BOOL
	Group	User I/O
	Units	—
	Minimum Value	0
	Maximum Value	1
	Default Value	0

OutB DN FltValue This parameter determines the state that Output B assumes when a DeviceNet network fault occurs and Parameter 41 is set to “0” 0 = Open 1 = Close	Parameter Number	42
	Access Rule	GET/SET
	Data Type	BOOL
	Group	User I/O
	Units	—
	Minimum Value	0
	Maximum Value	1
	Default Value	0

OutB DN IdlState This parameter with Parameter 44, defines how Output B responds when the DeviceNet network is idle. When set to “0”, Output B opens or closes as determined by the setting in Parameter 44. The DN Flt parameters supersede the Dn Idl parameters	Parameter Number	43
	Access Rule	GET/SET
	Data Type	BOOL
	Group	User I/O
	Units	—
	Minimum Value	0
	Maximum Value	1
	Default Value	0

OutB DN IdlValue This parameter determines the state that Output B assumes when the network is idle and Parameter 43 is set to “0” 0 = Open 1 = Close	Parameter Number	44
	Access Rule	GET/SET
	Data Type	BOOL
	Group	User I/O
	Units	—
	Minimum Value	0
	Maximum Value	1
	Default Value	0

Misc. Group

Keypad Mode This parameter selects if the keypad operation is maintained or momentary 0= Maintained 1= Momentary	Parameter Number	45
	Access Rule	GET/SET
	Data Type	BOOL
	Group	Misc.
	Units	—
	Minimum Value	0
	Maximum Value	1
	Default Value	0

Keypad Disable This parameter disables all keypad function except for the “OFF” and “RESET” buttons 0=Not Disabled 1=Disabled	Parameter Number	46
	Access Rule	GET/SET
	Data Type	BOOL
	Group	Misc.
	Units	—
	Minimum Value	0
	Maximum Value	1
	Default Value	0

Set to Defaults This parameter if set to 1 sets the device to the factory defaults 0=No Operation 1=Set to Defaults	Parameter Number	47
	Access Rule	GET/SET
	Data Type	BOOL
	Group	Misc.
	Units	—
	Minimum Value	0
	Maximum Value	1
	Default Value	0

Base Enclosure Indicates the ArmorStart Base unit enclosure rating Bit 0 = IP67 Bit 1 = Nema 4X Bit 2-15 = Reserved	Parameter Number	56
	Access Rule	GET
	Data Type	WORD
	Group	Misc.
	Units	—
	MinimumValue	0
	Maximum Value	65535
	Default Value	0

Base Options Indicates the options for the ArmorStart Base unit Bit 0 = Output Fuse Bit 1 = Safety Monitor Bit 2 = CP Fuse Detect Bits 3-7 = Reserved Bit 8 = 10A Base Bit 9 = 25A Base Bit 10-15 = Reserved	Parameter Number	57
	Access Rule	GET
	Data Type	WORD
	Group	Misc.
	Units	—
	MinimumValue	0
	Maximum Value	65535
	Default Value	0

Wiring Options Bit 0 = Conduit Bit 1 = Round Media Bits 2-15 = Reserved	Parameter Number	58
	Access Rule	GET
	Data Type	WORD
	Group	Misc.
	Units	—
	MinimumValue	0
	Maximum Value	65535
	Default Value	0

Starter Enclosure Bit 0 = IP67 Bit 1 = NEMA 4x Bits 2-15 reserved	Parameter Number	59
	Access Rule	GET
	Data Type	WORD
	Group	Misc.
	Units	—
	MinimumValue	0
	Maximum Value	65535
	Default Value	—

Starter Option Bit 0 = HOA Keypad Bit 1 = Safety Monitor Bit 2 = Source Brake Bits 4-15 = Reserved	Parameter Number	60
	Access Rule	GET
	Data Type	WORD
	Group	Misc.
	Units	—
	MinimumValue	0
	Maximum Value	66535
	Default Value	—

ZIP Parameters

AutoRun Zip Enables ZIP data production on power up 0=Disable 1=Enable	Parameter Number	67
	Access Rule	Get/Set
	Data Type	BOOL
	Group	ZIP Parameters
	Units	—
	MinimumValue	0
	Maximum Value	1
	Default Value	0

Zone Produced EPR The Expected Packet Rate in msec. Defines the rate at which ZIP data is produced. Defaults to 75 msec.	Parameter Number	68
	Access Rule	GET/SET
	Data Type	UINT
	Group	Zip Parameter
	Units	msec
	MinimumValue	0
	Maximum Value	65535
	Default Value	75

Zone Produced PIT The Production Inhibit Time in msec. Defines the minimum time between Change of State data production	Parameter Number	69
	Access Rule	GET/SET
	Data Type	UINT
	Group	ZIP Parameters
	Units	msec
	MinimumValue	0
	Maximum Value	65535
	Default Value	75

Zone #1 MAC ID The node address of the device whose data is to be consumed for zone 1	Parameter Number	70
	Access Rule	GET/SET
	Data Type	USINT
	Group	ZIP Parameters
	Units	—
	MinimumValue	0
	Maximum Value	64
	Default Value	64

Zone #2 MAC ID The node address of the device whose data is to be consumed for zone 2	Parameter Number	71
	Access Rule	GET/SET
	Data Type	USINT
	Group	ZIP Parameters
	Units	—
	MinimumValue	0
	Maximum Value	64
	Default Value	64

Zone #3 MAC ID The node address of the device whose data is to be consumed for zone 3	Parameter Number	72
	Access Rule	GET/SET
	Data Type	USINT
	Group	ZIP Parameters
	Units	—
	MinimumValue	0
	Maximum Value	64
	Default Value	64

Zone #4 MAC ID The node address of the device whose data is to be consumed for zone 4	Parameter Number	73
	Access Rule	GET/SET
	Data Type	USINT
	Group	Misc. Option
	Units	—
	MinimumValue	0
	Maximum Value	64
	Default Value	64

Zone #1 Health Read Only consumed connection status for zone 1 0 = Healthy 1 = Unhealthy	Parameter Number	74
	Access Rule	GET
	Data Type	BOOL
	Group	ZIP Parameters
	Units	—
	MinimumValue	0
	Maximum Value	1
	Default Value	0

Zone #2 Health Read Only consumed connection status for zone 2 0 = Healthy 1 = Unhealthy	Parameter Number	75
	Access Rule	GET
	Data Type	BOOL
	Group	ZIP Parameters
	Units	—
	MinimumValue	0
	Maximum Value	1
	Default Value	0

Zone #3 Health Read Only consumed connection status for zone 3 0 = Healthy 1 = Unhealthy	Parameter Number	76
	Access Rule	GET
	Data Type	BOOL
	Group	ZIP Parameters
	Units	—
	MinimumValue	0
	Maximum Value	1
	Default Value	0

Zone #4 Health Read Only consumed connection status for zone 4 0 = Healthy 1 = Unhealthy	Parameter Number	77
	Access Rule	GET
	Data Type	BOOL
	Group	ZIP Parameters
	Units	—
	MinimumValue	0
	Maximum Value	1
	Default Value	0

Zone #1 Mask Bit enumerated consumed data mask for zone 1. Each bit represents a byte in consumed data up to 8 bytes in length. If a mask bit is set, the corresponding consumed data byte is placed in the DeviceLogix data table	Parameter Number	78
	Access Rule	GET/SET
	Data Type	BYTE
	Group	ZIP Parameters
	Units	—
	MinimumValue	0
	Maximum Value	255
	Default Value	0

Zone #2 Mask Bit enumerated consumed data mask for zone 2. Each bit represents a byte in consumed data up to 8 bytes in length. If a mask bit is set, the corresponding consumed data byte is placed in the DeviceLogix data table	Parameter Number	79
	Access Rule	GET/SET
	Data Type	BYTE
	Group	ZIP Parameters
	Units	—
	MinimumValue	0
	Maximum Value	255
	Default Value	0

Zone #3 Mask Bit enumerated consumed data mask for zone 3. Each bit represents a byte in consumed data up to 8 bytes in length. If a mask bit is set, the corresponding consumed data byte is placed in the DeviceLogix data table	Parameter Number	80
	Access Rule	GET/SET
	Data Type	BYTE
	Group	ZIP Parameters
	Units	—
	MinimumValue	0
	Maximum Value	255
	Default Value	0

Zone #4 Mask Bit enumerated consumed data mask for zone 4. Each bit represents a byte in consumed data up to 8 bytes in length. If a mask bit is set, the corresponding consumed data byte is placed in the DeviceLogix data table	Parameter Number	81
	Access Rule	GET/SET
	Data Type	BYTE
	Group	ZIP Parameters
	Units	—
	MinimumValue	0
	Maximum Value	255
	Default Value	0

Zone #1 Offset The byte offset into the ZIP data portion of the DeviceLogix data table to place the chosen consumed data bytes for zone 1.	Parameter Number	82
	Access Rule	GET/SET
	Data Type	UINT
	Group	ZIP Parameters
	Units	—
	MinimumValue	0
	Maximum Value	7
	Default Value	0

Zone #2 Offset The byte offset into the ZIP data portion of the DeviceLogix data table to place the chosen consumed data bytes for zone 2.	Parameter Number	83
	Access Rule	GET/SET
	Data Type	UNIT
	Group	ZIP Parameters
	Units	—
	MinimumValue	0
	Maximum Value	7
	Default Value	0

Zone #3 Offset The byte offset into the ZIP data portion of the DeviceLogix data table to place the chosen consumed data bytes for zone 3.	Parameter Number	84
	Access Rule	GET/SET
	Data Type	UNIT
	Group	ZIP Parameters
	Units	—
	MinimumValue	0
	Maximum Value	1
	Default Value	0

Zone #4 Offset The byte offset into the ZIP data portion of the DeviceLogix data table to place the chosen consumed data bytes for zone 4.	Parameter Number	85
	Access Rule	GET/SET
	Data Type	UNIT
	Group	ZIP Parameters
	Units	—
	MinimumValue	0
	Maximum Value	1
	Default Value	0

Zone #1 EPR The Expected Packet Rate in msec. for the zone 1 consuming connection. If consumed data is not received in 4 times this value, the zone connection will time out and "Zone #1 Health" will report 1 = Not Healthy.	Parameter Number	86
	Access Rule	GET/SET
	Data Type	UINT
	Group	ZIP Parameters
	Units	msec
	MinimumValue	0
	Maximum Value	65535
	Default Value	75

Zone #2 EPR The Expected Packet Rate in msec. for the zone 1 consuming connection. If consumed data is not received in 4 times this value, the zone connection will time out and "Zone #2 Health" will report 1 = Not Healthy.	Parameter Number	87
	Access Rule	GET/SET
	Data Type	UNIT
	Group	ZIP Parameters
	Units	msec
	MinimumValue	0
	Maximum Value	65535
	Default Value	75

Zone #3 EPR The Expected Packet Rate in msec. for the zone 1 consuming connection. If consumed data is not received in 4 times this value, the zone connection will time out and "Zone #3 Health" will report 1 = Not Healthy.	Parameter Number	88
	Access Rule	GET/SET
	Data Type	UNIT
	Group	ZIP Parameters
	Units	msec
	MinimumValue	0
	Maximum Value	65535
	Default Value	75

Zone #4 EPR The Expected Packet Rate in msec. for the zone 1 consuming connection. If consumed data is not received in 4 times this value, the zone connection will time out and "Zone #4 Health" will report 1 = Not Healthy.	Parameter Number	89
	Access Rule	GET/SET
	Data Type	UNIT
	Group	ZIP Parameters
	Units	msec
	MinimumValue	0
	Maximum Value	65535
	Default Value	75

Zone #1 Control Zone 1 Control Word. Default Bit 0 and Bit 1 set, all other bits clear. Bit0=Security Enable 1=Enable data security Bit1=COS Cnxn 1=Consume DNet Group 2 COS messages Bit2=Poll Cnxn 1=Consume DNet Group 2 Poll Response msgs. Bit3=Strobe Cnxn 1=Consume DNet Group 2 Strobe Response msgs. Bit4=Multicast Poll 1=Consume Multicast Poll Response messages.	Parameter Number	90
	Access Rule	GET/SET
	Data Type	BYTE
	Group	ZIP Parameters
	Units	—
	MinimumValue	0
	Maximum Value	255
	Default Value	3

Zone #2 Control Zone 2 Control Word. Default Bit 0 and Bit 1 set, all other bits clear. Bit0=Security Enable 1=Enable data security Bit1=COS Cnxn 1=Consume DNet Group 2 COS messages Bit2=Poll Cnxn 1=Consume DNet Group 2 Poll Response msgs. Bit3=Strobe Cnxn 1=Consume DNet Group 2 Strobe Response msgs. Bit4=Multicast Poll 1=Consume Multicast Poll Response messages	Parameter Number	91
	Access Rule	GET/SET
	Data Type	BYTE
	Group	ZIP Parameters
	Units	—
	MinimumValue	0
	Maximum Value	255
	Default Value	3

Zone #3 Control Zone 3 Control Word. Default Bit 0 and Bit 1 set, all other bits clear. Bit0=Security Enable 1=Enable data security Bit1=COS Cnxn 1=Consume DNet Group 2 COS messages Bit2=Poll Cnxn 1=Consume DNet Group 2 Poll Response msgs. Bit3=Strobe Cnxn 1=Consume DNet Group 2 Strobe Response msgs. Bit4=Multicast Poll 1=Consume Multicast Poll Response messages	Parameter Number	92
	Access Rule	GET/SET
	Data Type	BYTE
	Group	ZIP Parameters
	Units	—
	MinimumValue	0
	Maximum Value	255
	Default Value	3

Zone #4 Control Zone 3 Control Word. Default Bit 0 and Bit 1 set, all other bits clear. Bit0=Security Enable 1=Enable data security Bit1=COS Cnxn 1=Consume DNet Group 2 COS messages Bit2=Poll Cnxn 1=Consume DNet Group 2 Poll Response msgs. Bit3=Strobe Cnxn 1=Consume DNet Group 2 Strobe Response msgs. Bit4=Multicast Poll 1=Consume Multicast Poll Response messages	Parameter Number	93
	Access Rule	GET/SET
	Data Type	BYTE
	Group	ZIP Parameters
	Units	—
	MinimumValue	0
	Maximum Value	255
	Default Value	3

Zone #1 Key When the “Security Enable” bit for zone 1 is enabled, this value must match the value of the Device Value Key parameter in the device whose data is being consumed for zone 1.	Parameter Number	94
	Access Rule	GET/SET
	Data Type	UINT
	Group	ZIP Parameters
	Units	—
	MinimumValue	0
	Maximum Value	65535
	Default Value	0

Zone #2 Key When the "Security Enable" bit for zone 2 is enabled, this value must match the value of the Device Value Key parameter in the device whose data is being consumed for zone 2.	Parameter Number	95
	Access Rule	GET/SET
	Data Type	UINT
	Group	ZIP Parameters
	Units	—
	MinimumValue	0
	Maximum Value	65535
	Default Value	0

Zone #3 Key When the "Security Enable" bit for zone 3 is enabled, this value must match the value of the Device Value Key parameter in the device whose data is being consumed for zone 3.	Parameter Number	96
	Access Rule	GET/SET
	Data Type	UINT
	Group	ZIP Parameters
	Units	—
	MinimumValue	0
	Maximum Value	65535
	Default Value	0

Zone #4 KEY When the "Security Enable" bit for zone 4 is enabled, this value must match the value of the Device Value Key parameter in the device whose data is being consumed for zone 4	Parameter Number	97
	Access Rule	GET/SET
	Data Type	UINT
	Group	ZIP Parameters
	Units	—
	MinimumValue	0
	Maximum Value	65535
	Default Value	0

Device Value Key This value is produced in the last 2 bytes of data when one of the ZIP assemblies is chosen for data production.	Parameter Number	98
	Access Rule	GET/SET
	Data Type	UINT
	Group	ZIP Parameters
	Units	—
	MinimumValue	0
	Maximum Value	65535
	Default Value	0

Zone Ctrl Enable Global enable for ZIP peer-to-peer messaging. This parameter must be disabled before any changes to the ZIP configuration for the device can be made. 0=Disable 1=Enable	Parameter Number	99
	Access Rule	GET/SET
	Data Type	BOOL
	Group	ZIP Parameters
	Units	—
	MinimumValue	0
	Maximum Value	1
	Default Value	0

Starter Display

Phase A Current This parameter provides the current of Phase A measured n increments of 1/10th of an ampere	Parameter Number	101
	Access Rule	GET/SET
	Data Type	INT
	Group	Starter Display
	Units	xx.x Amps
	Minimum Value	0
	Maximum Value	32767
	Default Value	0

Phase B Current This parameter provides the current of Phase B measured in increments of 1/10th of an ampere	Parameter Number	102
	Access Rule	GET/SET
	Data Type	INT
	Group	Starter Display
	Units	xx.x Amps
	Minimum Value	0
	Maximum Value	32767
	Default Value	0

Phase C Current This parameter provides the current of Phase C measured in increments of 1/10th of an ampere	Parameter Number	103
	Access Rule	GET/SET
	Data Type	INT
	Group	Starter Display
	Units	xx.x Amps
	Minimum Value	0
	Maximum Value	32767
	Default Value	0

Average Current This parameter provides the average current that is measured in increments of 1/10th of an ampere	Parameter Number	104
	Access Rule	GET/SET
	Data Type	INT
	Group	Starter Display
	Units	xx.x Amps
	Minimum Value	0
	Maximum Value	32767
	Default Value	0

% Therm Utilized This parameter displays the % Thermal Capacity used	Parameter Number	105
	Access Rule	GET/SET
	Data Type	USINT
	Group	Starter Display
	Units	%
	Minimum Value	0
	Maximum Value	100
	Default Value	0

Starter Setup

FLA Setting The motor's full load current rating is programmed in this parameter	Parameter Number	106
	Access Rule	GET/SET
	Data Type	INT
	Group	Starter Setup
	Units	xx.x Amps
	Minimum Value	See Table 7 -
	Maximum Value	See Table 7 -
	Default Value	See Table 7 -

Table 7 - FLA Setting Ranges and Default Values (with indicated setting precision)

FLA Current Range (A)		**Default Value**
Minimum Value	**Maximum Value**	
0.24	1.2	0.24
0.5	2.5	0.5
1.1	5.5	1.1
3.2	16.0	3.2

Overload Class This parameter allows the installer to select the overload class 1= Overload Class 10 2= Overload Class 15 3= Overload Class 20	Parameter Number	107
	Access Rule	GET/SET
	Data Type	USINT
	Group	Starter Setup
	Units	xx.x Amps
	Minimum Value	1
	Maximum Value	3
	Default Value	1

OL Reset Level This parameter allows the installer select the % Thermal Capacity that an overload can be cleared	Parameter Number	108
	Access Rule	GET/SET
	Data Type	USINT
	Group	Starter Setup
	Units	%
	Minimum Value	0
	Maximum Value	100
	Default Value	75

Bulletin 284 Programmable Parameters for Volts per Hertz Controllers

This chapter describes each programmable parameter and its function for Bulletin 284 Volts per Hertz Controllers.

Parameter Programming

Each distributed motor controller type has a common set of parameters followed by a set of parameters that pertain to the individual starter type.

See *Chapter 7, DeviceNet Commissioning*, for instructions in using RSNetWorx for DeviceNet to modify parameter settings.

IMPORTANT	Resetting the Factory Default Values Parameter 47, *Set to Defaults*, allows the installer to reset all parameter to the factory default values. It also resets the MAC ID to its factory default after DeviceNet Power is cycled if switches are set >63.

IMPORTANT	Parameter setting changes downloaded to the ArmorStart take effect immediately, even during a running status.

IMPORTANT	Parameter setting changes made in a configuration tool such as RSNetWorx for DeviceNet do not take effect in the ArmorStart until the installer applies or downloads the new settings to the device.

Parameter Group Listing

The Bulletin 284D ArmorStart contains ten parameter groups. The parameters that are shown in the DeviceLogix Setup, DeviceNet Setup, Starter Protection Setup, User I/O Setup, Misc. Parameter Setup, Drive DeviceNet, ZIP Parameters, Display Group, Basic Program, and Advanced Program are discussed in this chapter.

Table 8 - Parameter Group Listing

DeviceLogix	DeviceNet	Starter Protection	User I/O	Miscellaneous	Drive DeviceNet
1 Hdw Inputs	**10** Autobaud Enable	**22** Breaker Type	**30** Off-to-On Delay	**45** Keypad Mode	**48** Drive Control
2 Network Inputs	**11** Consumed IO Assy	**23** PrFltResetMode	**31** On-to-Off Delay	**46** Keypad Disable	**49** Drvin PrFltState
3 Network Outputs	**12** Produced IO Assy	**24** Pr Fault Enable	**32** In Sink/Source	**47** Set To Defaults	**50** Drvin PrFltValue
4 Trip Status	**13** Prod Assy Word 0	**25** Pr Fault Reset	**33** OutA Pr FltState	**56** Base Enclosure	**51** Drvin DNFltState
5 Starter Status	**14** Prod Assy Word 1	**26** StrtrDN FltState	**34** OutA Pr FltValue	**57** Base Option	**52** Drvin DNFltValue
6 DNet Status	**15** Prod Assy Word 2	**27** StrtrDN FltValue	**35** OutA DN FltState	**58** Wiring Option	**53** Drvin DNFltState
7 Starter Command	**16** Prod Assy Word 3	**28** StrtrDN IdlState	**36** OutA DN FltValue	**59** Starter Enclosure	**54** Drvin DNFltValue
8 Network Override	**17** Consumed IO Size	**29** StrtrDN IdlValue	**37** OutA DN IdlState	**60** Starter Option	**55** High Speed En
9 Comm Override	**18** Produced IO Size	**61** Last Pr Fault	**38** OutA DN IdlValue		
	19 Starter COS Mask	**62** Warning Status	**39** OutB Pr FltState		
	20 Net Out COS Mask		**40** OutB Pr FltValue		
	21 DNet Voltage		**41** OutB DN FltState		
			42 OutB DN FltValue		
			43 OutB DN IdlState		
			44 OutB DN IdlValue		
ZIP Parameters		**Display Group**	**Basic Program**	**Advanced Program**	
67 AutoRun Zip	**84** Zone #3 Offset	**101** Output Freq	**131** Motor NP Volts	**151** Digital In1 Sel	**184** Boost Select
68 Zone Produced EPR	**85** Zone #4 Offset	**102** Commanded Freq	**132** Motor NP Hertz	**152** Digital In2 Sel	**185** Reserved
69 Zone Produced PIT	**86** Zone #1 EPR	**103** Output Current	**133** Motor OL Current	**153** Digital In3 Sel	**186** Reserved
70 Zone #1 MacId	**87** Zone #2 EPR	**104** Output Voltage	**134** Minimum Freq	**154** Digital In4 Sel	**187** Reserved
71 Zone #2 MacId	**88** Zone #3 EPR	**105** DC Bus Voltage	**135** Maximum Freq	**155** Relay Out Sel	**188** Maximum Voltage
72 Zone #3 MacId	**89** Zone #4 EPR	**106** Drive Status	**136** Start Source	**156** Relay Out Level	**189** Current Limit 1
73 Zone #4 MacId	**90** Zone #1 Control	**107** Fault 1 Code	**137** Stop Mode	**157** Relay Out LevelF	**190** Motor OL Select
74 Zone #1 Health	**91** Zone #2 Control	**108** Fault 2 Code	**138** Speed Reference	**158** Reserved	**191** PWM Frequency
75 Zone #2 Health	**92** Zone #3 Control	**109** Fault 3 Code	**139** Accel Time 1	**159** Reserved	**192** Auto Rstrt Tries
76 Zone #3 Health	**93** Zone #4 Control	**110** Process Display	**140** Decel Time 1	**160** Reserved	**193** Auto Rstrt Delay
77 Zone #4 Health	**94** Zone #1 Key	**112** Control Source	**141** Reset To Defalts	**161** Reserved	**194** Start At PowerUp
78 Zone #1 Mask	**95** Zone #2 Key	**113** Contrl In Status	**142** Reserved	**162** Reserved	**195** Reverse Disable
79 Zone #2 Mask	**96** Zone #3 Key	**114** Dig In Status	**143** Motor OL Ret	**163** Reserved	**196** Flying Start En
80 Zone #3 Mask	**97** Zone #4 Key	**115** Comm Status		**164** Reserved	**197** Compensation
81 Zone #4 Mask	**98** Device Value Key	**116** Control SW Ver		**165** Reserved	**198** SW Current Trip
82 Zone #1 Offset	**99** Zone Ctrl Enable	**117** Drive Type		**166** Reserved	**199** Process Factor
83 Zone #2 Offset		**118** Elapsed Run Time		**167** Accel Time 2	**200** Fault Clear
		119 Testpoint Data		**168** Decel Time 2	**201** Program Lock
		120 Analog In 0…10V		**169** Internal Freq	**202** Testpoint Sel
		121 Analog In 4…20 mA		**170** Preset Freq 0	**203** Comm Data Rate
		122 Reserved		**171** Preset Freq 1	**204** Comm Node Addr
		123 Reserved		**172** Preset Freq 2	**205** Comm Loss Action
		124 Drive Temp		**173** Preset Freq 3	**206** Comm Loss Time
				174 Reserved	**207** Comm Format
				175 Reserved	**208** Language Set
				176 Reserved	**209** Reserved
				177 Reserved	**210** Anlg In 0…10V Lo
				178 Jog Frequency	**211** Anlg In 0…10V Hi
				179 Jog Accel/Decel	**212** Anlg In 4…20 mA Lo
				180 DC Brake Time	**213** Anlg In4…20 mA Hi
				181 DC Brake Level	**214** Slip Hertz @ FLA
				182 DB Resistor Sel	**215** Process Time Lo
				183 S Curve %	**216** Process Time Hi

DeviceLogix Group

Hdw Inputs This parameter provides status of hardware inputs.	Parameter Number	1
	Access Rule	GET
	Data Type	WORD
	Group	DeviceLogix
	Units	—
	Minimum Value	0
	Maximum Value	15
	Default Value	0

Bit				Function
3	**2**	**1**	**0**	
—	—	—	X	Input 0
—	—	X	—	Input 1
—	X	—	—	Input 2
X	—	—	—	Input 3

Network Inputs This parameter provides status of network inputs.	Parameter Number	2
	Access Rule	GET
	Data Type	WORD
	Group	DeviceLogix
	Units	—
	Minimum Value	0
	Maximum Value	65535
	Default Value	0

Bit																Function
15	**14**	**13**	**12**	**11**	**10**	**9**	**8**	**7**	**6**	**5**	**4**	**3**	**2**	**1**	**0**	
—	—	—	—	—	—	—	—	—	—	—	—	—	—	—	X	Net Input 0
—	—	—	—	—	—	—	—	—	—	—	—	—	—	X	—	Net Input 1
—	—	—	—	—	—	—	—	—	—	—	—	—	X	—	—	Net input 2
—	—	—	—	—	—	—	—	—	—	—	—	X	—	—	—	Net Input 3
—	—	—	—	—	—	—	—	—	—	—	X	—	—	—	—	Net Input 4
—	—	—	—	—	—	—	—	—	—	X	—	—	—	—	—	Net Input 5
—	—	—	—	—	—	—	—	—	X	—	—	—	—	—	—	Net Input 6
—	—	—	—	—	—	—	—	X	—	—	—	—	—	—	—	Net Input 7
—	—	—	—	—	—	—	X	—	—	—	—	—	—	—	—	Net Input 8
—	—	—	—	—	—	X	—	—	—	—	—	—	—	—	—	Net Input 9
—	—	—	—	—	X	—	—	—	—	—	—	—	—	—	—	Net Input 10
—	—	—	—	X	—	—	—	—	—	—	—	—	—	—	—	Net Input 11
—	—	—	X	—	—	—	—	—	—	—	—	—	—	—	—	Net Input 12
—	—	X	—	—	—	—	—	—	—	—	—	—	—	—	—	Net Input 13
—	X	—	—	—	—	—	—	—	—	—	—	—	—	—	—	Net Input 14
X	—	—	—	—	—	—	—	—	—	—	—	—	—	—	—	Net Input 15

Network Outputs This parameter provides status of network outputs.	Parameter Number	3
	Access Rule	GET
	Data Type	WORD
	Group	DeviceLogix
	Units	—
	Minimum Value	0
	Maximum Value	32767
	Default Value	0

Bit															**Function**
14	**13**	**12**	**11**	**10**	**9**	**8**	**7**	**6**	**5**	**4**	**3**	**2**	**1**	**0**	
—	—	—	—	—	—	—	—	—	—	—	—	—	—	X	Net Output 0
—	—	—	—	—	—	—	—	—	—	—	—	—	X	—	Net Output 1
—	—	—	—	—	—	—	—	—	—	—	—	X	—	—	Net Output 2
—	—	—	—	—	—	—	—	—	—	—	X	—	—	—	Net Output 3
—	—	—	—	—	—	—	—	—	—	X	—	—	—	—	Net Output 4
—	—	—	—	—	—	—	—	—	X	—	—	—	—	—	Net Output 5
—	—	—	—	—	—	—	—	X	—	—	—	—	—	—	Net Output 6
—	—	—	—	—	—	—	X	—	—	—	—	—	—	—	Net Output 7
—	—	—	—	—	—	X	—	—	—	—	—	—	—	—	Net Output 8
—	—	—	—	—	X	—	—	—	—	—	—	—	—	—	Net Output 9
—	—	—	—	X	—	—	—	—	—	—	—	—	—	—	Net Output 10
—	—	—	X	—	—	—	—	—	—	—	—	—	—	—	Net Output 11
—	—	X	—	—	—	—	—	—	—	—	—	—	—	—	Net Output 12
—	X	—	—	—	—	—	—	—	—	—	—	—	—	—	Net Output 13
X	—	—	—	—	—	—	—	—	—	—	—	—	—	—	Net Output 14

Trip Status This parameter provides trip identification.	Parameter Number	4
	Access Rule	GET
	Data Type	WORD
	Group	DeviceLogix Setup
	Units	—
	Minimum Value	0
	Maximum Value	65535
	Default Value	0

Bit																**Function**
15	**14**	**13**	**12**	**11**	**10**	**9**	**8**	**7**	**6**	**5**	**4**	**3**	**2**	**1**	**0**	
—	—	—	—	—	—	—	—	—	—	—	—	—	—	—	X	Short Circuit
—	—	—	—	—	—	—	—	—	—	—	—	—	—	X	—	Overload
—	—	—	—	—	—	—	—	—	—	—	—	—	X	—	—	Phase Short
—	—	—	—	—	—	—	—	—	—	—	—	X	—	—	—	Ground Fault
—	—	—	—	—	—	—	—	—	—	—	X	—	—	—	—	Stall
—	—	—	—	—	—	—	—	—	—	X	—	—	—	—	—	Control Power
—	—	—	—	—	—	—	—	—	X	—	—	—	—	—	—	IO Fault
—	—	—	—	—	—	—	—	X	—	—	—	—	—	—	—	Overtemperature
—	—	—	—	—	—	—	X	—	—	—	—	—	—	—	—	Over Current
—	—	—	—	—	—	X	—	—	—	—	—	—	—	—	—	Dnet Power Loss
—	—	—	—	—	X	—	—	—	—	—	—	—	—	—	—	Internal Comm ❶
—	—	—	—	X	—	—	—	—	—	—	—	—	—	—	—	DC Bus Fault
—	—	—	X	—	—	—	—	—	—	—	—	—	—	—	—	EEprom
—	—	X	—	—	—	—	—	—	—	—	—	—	—	—	—	HW Fault ❷
—	X	—	—	—	—	—	—	—	—	—	—	—	—	—	—	Restart Retries
X	—	—	—	—	—	—	—	—	—	—	—	—	—	—	—	Misc. Fault ❸

❶ Indicates DB1 Comm Fault for Bulletin 284.
❷ Check Last Protection fault for details, Parameter 61.
❸ Indicates DB1 Brake Fault for Bulletin 284.

Starter Status	Parameter Number	5
This parameter provides the status of the starter.	Access Rule	GET
	Data Type	WORD
	Group	DeviceLogix
	Units	—
	Minimum Value	0
	Maximum Value	65535
	Default Value	0

Bit																**Function**
15	**14**	**13**	**12**	**11**	**10**	**9**	**8**	**7**	**6**	**5**	**4**	**3**	**2**	**1**	**0**	
—	—	—	—	—	—	—	—	—	—	—	—	—	—	—	X	Tripped
—	—	—	—	—	—	—	—	—	—	—	—	—	—	X	—	Warning
—	—	—	—	—	—	—	—	—	—	—	—	—	X	—	—	Running Fwd
—	—	—	—	—	—	—	—	—	—	—	—	X	—	—	—	Running Rev
—	—	—	—	—	—	—	—	—	—	—	X	—	—	—	—	Ready
—	—	—	—	—	—	—	—	—	—	X	—	—	—	—	—	Net Ctl Status
—	—	—	—	—	—	—	—	—	X		—	—	—	—	—	Net Ref Status
—	—	—	—	—	—	—	—	X	—	—	—	—	—	—	—	At Reference
—	—	—	—	—	—	—	X	—	—	—	—	—	—	—	—	DrvOpto1
—	—	—	—	—	—	X	—	—	—	—	—	—	—	—	—	DrvOpto2
—	—	—	—	—	X	—	—	—	—	—	—	—	—	—	—	Keypad Jog
—	—	—	—	X	—	—	—	—	—	—	—	—	—	—	—	Keypad Hand
—	—	—	X	—	—	—	—	—	—	—	—	—	—	—	—	HOA Status
—	—	X	—	—	—	—	—	—	—	—	—	—	—	—	—	140M On
—	X	—	—	—	—	—	—	—	—	—	—	—	—	—	—	Contactor 1 ❶
X	—	—	—	—	—	—	—	—	—	—	—	—	—	—	—	Contactor 2 ❷

❶ Refers to Source Brake contactor status.
❷ Refers to Output contactor status.

Dnet Status This parameter provides status of the DeviceNet connection.	Parameter Number	6
	Access Rule	GET
	Data Type	WORD
	Group	DeviceLogix
	Units	—
	Minimum Value	0
	Maximum Value	65535
	Default Value	0

Bit																**Function**
15	**14**	**13**	**12**	**11**	**10**	**9**	**8**	**7**	**6**	**5**	**4**	**3**	**2**	**1**	**0**	
—	—	—	—	—	—	—	—	—	—	—	—	—	—	—	X	Exp Cnxn
—	—	—	—	—	—	—	—	—	—	—	—	—	—	X	—	IO Cnxn
—	—	—	—	—	—	—	—	—	—	—	—	—	X	—	—	Exp Flt
—	—	—	—	—	—	—	—	—	—	—	—	X	—	—	—	IO Flt
—	—	—	—	—	—	—	—	—	—	—	X	—	—	—	—	IO Idle
—	—	—	—	—	—	—	—	X	X	X	—	—	—	—	—	Reserved
—	—	—	—	—	—	—	X	—	—	—	—	—	—	—	—	ZIP 1 Cnxn
—	—	—	—	—	—	X	—	—	—	—	—	—	—	—	—	ZIP 1 Flt
—	—	—	—	—	X	—	—	—	—	—	—	—	—	—	—	ZIP 2 Cnxn
—	—	—	—	X	—	—	—	—	—	—	—	—	—	—	—	ZIP 2 Flt
—	—	—	X	—	—	—	—	—	—	—	—	—	—	—	—	ZIP 3 Cnxn
—	—	X	—	—	—	—	—	—	—	—	—	—	—	—	—	ZIP 3 Flt
—	X	—	—	—	—	—	—	—	—	—	—	—	—	—	—	ZIP 4 Cnxn
X	—	—	—	—	—	—	—	—	—	—	—	—	—	—	—	ZIP 4 Flt

Starter Command This parameter provides the command the starter.	Parameter Number	7
	Access Rule	GET/SET
	Data Type	WORD
	Group	DeviceLogix
	Units	—
	Minimum Value	0
	Maximum Value	255
	Default Value	0

Bit								**Function**
7	**6**	**5**	**4**	**3**	**2**	**1**	**0**	
—	—	—	—	—	—	—	X	Run Fwd
—	—	—	—	—	—	X	—	Run Rev
—	—	—	—	—	X	—	—	Fault Reset
—	—	—	—	X	—	—	—	Jog Fwd
—	—	—	X	—	—	—	—	Jog Rev
—	—	X	—	—	—	—	—	Reserved
—	X	—	—	—	—	—	—	User Out A
X	—	—	—	—	—	—	—	User Out B

Network Override	Parameter Number	8
This parameter allows for the local logic to override a Network fault. 0 = Disable 1 = Enable	Access Rule	GET/SET
	Data Type	BOOL
	Group	DeviceLogix
	Units	—
	Minimum Value	0
	Maximum Value	1
	Default Value	0

Comm Override	Parameter Number	9
This parameter allows for local logic to override a loss of an I/O connection. 0 = Disable 1 = Enable	Access Rule	GET/SET
	Data Type	BOOL
	Group	DeviceLogix
	Units	—
	Minimum Value	0
	Maximum Value	1
	Default Value	0

DeviceNet Group

Autobaud Enable	Parameter Number	10
When this parameter is enabled, the device attempts to determine the network baud rate and set its baud rate to the same, provided network traffic exists. At least one node with an established baud rate must exist on the network for autobaud to occur. 0 = Disable 1 = Enable	Access Rule	GET/SET
	Data Type	BOOL
	Group	DeviceNet
	Units	—
	Minimum Value	0
	Maximum Value	1
	Default Value	1

Consumed I/O Assy	Parameter Number	11
This parameter selects the format of the I/O data consumed	Access Rule	GET/SET
	Data Type	USINT
	Group	DeviceNet
	Units	—
	Minimum Value	0
	Maximum Value	188
	Default Value	164

Produced I/O Assy	Parameter Number	12
This parameter selects the format of the I/O data produced.	Access Rule	GET/SET
	Data Type	USINT
	Group	DeviceNet
	Units	—
	Minimum Value	0
	Maximum Value	190
	Default Value	165

Prod Assy Word 0 This parameter is used to build bytes 0-1 for produced assembly 120.	Parameter Number	13
	Access Rule	GET/SET
	Data Type	INT
	Group	DeviceNet
	Units	—
	Minimum Value	0
	Maximum Value	216
	Default Value	1

Produced Assy Word 1 This parameter is used to build bytes 2-3 for produced assembly 120	Parameter Number	14
	Access Rule	GET/SET
	Data Type	INT
	Group	DeviceNet
	Units	—
	Minimum Value	0
	Maximum Value	216
	Default Value	4

Prod Assy Word 2 This parameter is used to build bytes 4-5 for produced assembly 120.	Parameter Number	15
	Access Rule	GET/SET
	Data Type	USINT
	Group	DeviceNet
	Units	—
	Minimum Value	0
	Maximum Value	216
	Default Value	5

Prod Assy Word 3 This parameter is used to build bytes 6-7 for produced assembly 120.	Parameter Number	16
	Access Rule	GET/SET
	Data Type	USINT
	Group	DeviceNet
	Units	—
	Minimum Value	0
	Maximum Value	216
	Default Value	6

Consumer I/O Size This parameter maps to the Scanner Tx Size.	Parameter Number	17
	Access Rule	GET
	Data Type	USINT
	Group	DeviceNet
	Units	—
	Minimum Value	0
	Maximum Value	8
	Default Value	4

Produced I/O Size This parameter maps to the Scanners Rx Size.	Parameter Number	18
	Access Rule	GET
	Data Type	USINT
	Group	DeviceNet
	Units	—
	Minimum Value	0
	Maximum Value	8
	Default Value	4

Starter COS Mask This parameter allows the installer to define the change-of-state conditions that results in a change-of-state message being produced.	Parameter Number	19
	Access Rule	GET/SET
	Data Type	WORD
	Group	DeviceNet
	Units	—
	Minimum Value	0
	Maximum Value	16383
	Default Value	16383

Bit														**Function**
13	**12**	**11**	**10**	**9**	**8**	**7**	**6**	**5**	**4**	**3**	**2**	**1**	**0**	
—	—	—	—	—	—	—	—	—	—	—	—	—	X	Tripped
—	—	—	—	—	—	—	—	—	—	—	—	X	—	Warning
—	—	—	—	—	—	—	—	—	—	—	X	—	—	Running Fwd
—	—	—	—	—	—	—	—	—	—	X	—	—	—	Running Rev
—	—	—	—	—	—	—	—	—	X	—	—	—	—	Ready
—	—	—	—	—	—	—	—	X	—	—	—	—	—	Net Ctl Status
—	—	—	—	—	—	—	X	—	—	—	—	—	—	Net Ref Status
—	—	—	—	—	—	X	—	—	—	—	—	—	—	At Reference
—	—	—	—	—	X	—	—	—	—	—	—	—	—	User Input 1
—	—	—	—	X	—	—	—	—	—	—	—	—	—	User Input 2
—	—	—	X	—	—	—	—	—	—	—	—	—	—	User Input 3
—	—	X	—	—	—	—	—	—	—	—	—	—	—	User Input 4
—	X	—	—	—	—	—	—	—	—	—	—	—	—	HOA Status
X	—	—	—	—	—	—	—	—	—	—	—	—	—	140M On

Net Out COS Mask	Parameter Number	20
This parameter sets the bit that triggers a COS message on the network output.	Access Rule	GET/SET
	Data Type	WORD
	Group	DeviceNet
	Units	—
	Minimum Value	0
	Maximum Value	32767
	Default Value	0

Bit															**Function**
14	**13**	**12**	**11**	**10**	**9**	**8**	**7**	**6**	**5**	**4**	**3**	**2**	**1**	**0**	
—	—	—	—	—	—	—	—	—	—	—	—	—	—	X	Net Output 0
—	—	—	—	—	—	—	—	—	—	—	—	—	X	—	Net Output 1
—	—	—	—	—	—	—	—	—	—	—	—	X	—	—	Net Output 2
—	—	—	—	—	—	—	—	—	—	—	X	—	—	—	Net Output 3
—	—	—	—	—	—	—	—	—	—	X	—	—	—	—	Net Output 4
—	—	—	—	—	—	—	—	—	X	—	—	—	—	—	Net Output 5
—	—	—	—	—	—	—	—	X	—	—	—	—	—	—	Net Output 6
—	—	—	—	—	—	—	X	—	—	—	—	—	—	—	Net Output 7
—	—	—	—	—	—	X	—	—	—	—	—	—	—	—	Net Output 8
—	—	—	—	—	X	—	—	—	—	—	—	—	—	—	Net Output 9
—	—	—	—	X	—	—	—	—	—	—	—	—	—	—	Net Output 10
—	—	—	X	—	—	—	—	—	—	—	—	—	—	—	Net Output 11
—	—	X	—	—	—	—	—	—	—	—	—	—	—	—	Net Output 12
—	X	—	—	—	—	—	—	—	—	—	—	—	—	—	Net Output 13
X	—	—	—	—	—	—	—	—	—	—	—	—	—	—	Net Output 14

Dnet Voltage	Parameter Number	21
This parameter provides the voltage measurement for the DeviceNet network.	Access Rule	GET
	Data Type	UINT
	Group	DeviceNet
	Units	V
	Minimum Value	0
	Maximum Value	6500
	Default Value	0

Starter Protection Group

Breaker Type	Parameter Number	22
	Access Rule	GET
This parameter identifies the Bulletin 140M used in this product. 0 = 140M-D8N-C10 1 = 140M-D8N-C25	Data Type	BOOL
	Group	Starter Protection
	Units	—
	Minimum Value	0
	Maximum Value	1
	Default Value	—

PrFlt Reset Mode	Parameter Number	23
	Access Rule	GET/SET
This parameter is the Protection Fault reset mode. 0 = Manual 1 = Automatic	Data Type	BOOL
	Group	Starter Protection
	Units	—
	Minimum Value	0
	Maximum Value	1
	Default Value	0

Pr Fault Enable	Parameter Number	24 ❶
	Access Rule	GET/SET
This parameter enables the Protection Fault by setting the bit to 1.	Data Type	WORD
	Group	Starter Protection
	Units	—
	Minimum Value	0
	Maximum Value	65535
	Default Value	64927

Bit																**Function**
15	**14**	**13**	**12**	**11**	**10**	**9**	**8**	**7**	**6**	**5**	**4**	**3**	**2**	**1**	**0**	
—	—	—	—	—	—	—	—	—	—	—	—	—	—	—	X	Short Circuit ❶
—	—	—	—	—	—	—	—	—	—	—	—	—	—	X	—	Overload ❶
—	—	—	—	—	—	—	—	—	—	—	—	—	X	—	—	Phase Short ❶
—	—	—	—	—	—	—	—	—	—	—	—	X	—	—	—	Ground Fault ❶
—	—	—	—	—	—	—	—	—	—	—	X	—	—	—	—	Stall ❶
—	—	—	—	—	—	—	—	—	—	X	—	—	—	—	—	Control Power
—	—	—	—	—	—	—	—	—	X	—	—	—	—	—	—	IO Fault
—	—	—	—	—	—	—	—	X	—	—	—	—	—	—	—	Overtemperature ❶
—	—	—	—	—	—	—	X	—	—	—	—	—	—	—	—	Over Current ❶
—	—	—	—	—	—	X	—	—	—	—	—	—	—	—	—	Dnet Power Loss
—	—	—	—	—	X	—	—	—	—	—	—	—	—	—	—	Internal Comm ❶
—	—	—	—	X	—	—	—	—	—	—	—	—	—	—	—	DC Bus Fault ❶
—	—	—	X	—	—	—	—	—	—	—	—	—	—	—	—	EEprom ❶
—	—	X	—	—	—	—	—	—	—	—	—	—	—	—	—	HW Fault ❶
—	X	—	—	—	—	—	—	—	—	—	—	—	—	—	—	Restart Retries ❶
X	—	—	—	—	—	—	—	—	—	—	—	—	—	—	—	Misc. Fault ❶

❶ Cannot be disabled.

Pr Fault Reset This parameter resets the Protection Fault on a transition 0 > 1.	Parameter Number	25
	Access Rule	GET/SET
	Data Type	BOOL
	Group	Starter Protection
	Units	—
	Minimum Value	0
	Maximum Value	1
	Default Value	0

StrtrDN FltState This parameter with Parameter 27 defines how the starter responds when a DeviceNet fault occurs. When set to 1, hold to last state occurs. When set to 0, goes to DnFlt Value on DN faults as determined by Parameter 27.	Parameter Number	26
	Access Rule	GET/SET
	Data Type	BOOL
	Group	Starter Protection
	Units	—
	Minimum Value	0
	Maximum Value	1
	Default Value	0

StrtrDN FltValue This parameter determines if the starter commands in the event of a DevceNet fault and Parameter 26 is set to 0. 0 = OFF 1 = ON	Parameter Number	27
	Access Rule	GET/SET
	Data Type	BOOL
	Group	Starter Protection
	Units	—
	Minimum Value	0
	Maximum Value	1
	Default Value	0

StrtrDN IdlState This parameter with Parameter 29 defines how the starter responds when a DeviceNet network is idle. When set to 1, hold to last state occurs. When set to 0, goes to DnFlt Value on DN faults as determined by Parameter 29. 0 = Go to Idle Value 1 = Hold Last State	Parameter Number	28
	Access Rule	GET/SET
	Data Type	BOOL
	Group	Starter Protection
	Units	—
	Minimum Value	0
	Maximum Value	1
	Default Value	0

StrtrDN IdlValue This parameter determines the state that starter assumes when the network is idle and Parameter 28 is set to 0. 0 = OFF 1 = ON	Parameter Number	29
	Access Rule	GET/SET
	Data Type	BOOL
	Group	Starter Protection
	Units	—
	Minimum Value	0
	Maximum Value	1
	Default Value	0

Last PR Fault 1 =Hdw Short Ckt 2 = Reserved 3 =Motor Overload (PF Fault Code 7) 4 =Drive Overload (PF Fault Code 64) 5 = Phase U to Gnd (PF Fault Code 38) 6 = Phase V to Gnd (PF Fault Code 39) 7 = Phase W to Gnd (PF Fault Code 40) 8 = Phase UV Short (PF4 Fault Code 41) 9 = Phase UW Short (PF Fault Code 42) 10 = Phase VW Short (PF Fault Code 43) 11 = Ground Fault (PF Fault Code 13) 12 = Stall (PF Fault Code 6) 13 = Control Pwr Loss 14 = Control Pwr Fuse 15 = Input Short 16 = Output Fuse 17 = Over Temp 18 = Heatsink OvrTmp (PF Fault Code 8) 19 = HW OverCurrent (PF Fault Code 12) 20 = SW OverCurrent (PF Fault Code 63) 21 = DNet Power Loss 22 = Internal Comm 23 = Drive Comm Loss (PF Fault Code 81) 24 = Power Loss (PF Fault Code 3) 25 = Under Voltage (PF Fault Code 4) 26 = Over Voltage (PF Fault Code 5) 27 = MCB EEPROM 28 = Base EEPROM 29 =Drive EEPROM (PF Fault Code 100) 30 = Wrong Base 31 = Fan RPM below minimum 32 = Power Unit (PF Fault Code 70) 33 = Drive IO Brd (PF Fault Code122) 34 = Restart Retries (PF Fault Code 33) 35 = Drive Aux In Flt (PF Fault Code 2) 36 = Analog Input (PF Fault Code 29) 37 = Drv Param Reset (PF Fault Code 48) 38 = SCV Autotune (PF Fault Code 80) 39 = Source Brake 40 = Reserved 41 = DB1 Comm 42 = DB1 Fault 43 = DB Switch Short 45 = Incompatible Drive Firmware	Parameter Number	61
	Access Rule	GET
	Data Type	UINT
	Group	Starter Protection
	Units	—
	Minimum Value	0
	Maximum Value	45
	Default Value	0

Warning Status This parameter warns the user of a condition, without faulting	Parameter Number	62
	Access Rule	GET
	Data Type	WORD
	Group	Starter Protection
	Units	—
	Minimum Value	0
	Maximum Value	65535
	Default Value	0

Bit																**Warning**
15	**14**	**13**	**12**	**11**	**10**	**9**	**8**	**7**	**6**	**5**	**4**	**3**	**2**	**1**	**0**	
—	—	—	—	—	—	—	—	—	—	—	—	—	—	—	X	Reserved
—	—	—	—	—	—	—	—	—	—	—	—	—	—	X	—	Reserved
—	—	—	—	—	—	—	—	—	—	—	—	—	X	—	—	Reserved
—	—	—	—	—	—	—	—	—	—	—	—	X	—	—	—	Reserved
—	—	—	—	—	—	—	—	—	—	—	X	—	—	—	—	Reserved
—	—	—	—	—	—	—	—	—	—	X	—	—	—	—	—	Control Power
—	—	—	—	—	—	—	—	—	X	—	—	—	—	—	—	IO Warning
—	—	—	—	—	—	—	—	X	—	—	—	—	—	—	—	Reserved
—	—	—	—	—	—	—	X	—	—	—	—	—	—	—	—	Phase Imbalance
—	—	—	—	—	—	X	—	—	—	—	—	—	—	—	—	DeviceNet
—	—	—	—	—	X	—	—	—	—	—	—	—	—	—	—	Reserved
—	—	—	—	X	—	—	—	—	—	—	—	—	—	—	—	Reserved
—	—	—	X	—	—	—	—	—	—	—	—	—	—	—	—	Reserved
—	—	X	—	—	—	—	—	—	—	—	—	—	—	—	—	Hardware
—	X	—	—	—	—	—	—	—	—	—	—	—	—	—	—	Reserved
X	—	—	—	—	—	—	—	—	—	—	—	—	—	—	—	Miscellaneous ❶

❶ When a Dynamic Brake Thermal Warning is detected, a Miscellaneous Warning (bit 15) is reported in the Warning Status parameter.

User I/O Group

Off-to-On Delay This parameter allows the installer to program a time duration before being reported ON.	Parameter Number	30
	Access Rule	GET/SET
	Data Type	UINT
	Group	User I/O
	Units	ms
	Minimum Value	0
	Maximum Value	65.000
	Default Value	0

On-to-Off Delay This parameter allows the installer to program a time duration before being reported OFF.	Parameter Number	31
	Access Rule	GET/SET
	Data Type	UINT
	Group	User I/O
	Units	ms
	Minimum Value	0
	Maximum Value	65.000
	Default Value	0

In Sink/Source This parameter allows the installer to program the inputs to be sink or source. 0 = Sink 1 = Source	Parameter Number	32
	Access Rule	GET/SET
	Data Type	BOOL
	Group	User I/O
	Units	—
	Minimum Value	0
	Maximum Value	1
	Default Value	0

OutA Pr FltState This parameter with Parameter 34 defines how Output A responds when a trip. When set to 1, Output A continue to operate as command via the network. When set to 0, Output A opens or closes as determined by setting in Parameter 34.	Parameter Number	33
	Access Rule	GET/SET
	Data Type	BOOL
	Group	User I/O
	Units	—
	Minimum Value	0
	Maximum Value	1
	Default Value	0

OutA Pr FltValue This parameter determines the state the Out A assumes when a trip occurs and Parameter 33 is set to 0. 0 = Open 1 = Close	Parameter Number	34
	Access Rule	GET/SET
	Data Type	BOOL
	Group	User I/O
	Units	—
	Minimum Value	0
	Maximum Value	1
	Default Value	0

OutA DN FltState This parameter with Parameter 36 defines how Output A respondsresponds when a DeviceNet network fault occurs. When set to 1, Output A holds state before trip occurrence. When set to 0, Output A opens or closes as determined by setting in Parameter 36.	Parameter Number	35
	Access Rule	GET/SET
	Data Type	BOOL
	Group	User I/O
	Units	—
	Minimum Value	0
	Maximum Value	1
	Default Value	0

OutA DN FltValue	Parameter Number	36
This parameter determines the state that Output A assumes when a DeviceNet network fault occurs and Parameter 35 is set to 0. 0 = Open 1 = Close	Access Rule	GET/SET
	Data Type	BOOL
	Group	User I/O
	Units	—
	Minimum Value	0
	Maximum Value	1
	Default Value	0

OutA DN IdlState	Parameter Number	37
This parameter with Parameter 38 defines how Output A responds when the DeviceNet network is idle. When set to 0, Output A opens or closes as determined by the setting in Parameter 38. The DN Flt parameters supersede the Dn Idl parameters.	Access Rule	GET/SET
	Data Type	BOOL
	Group	User I/O
	Units	—
	Minimum Value	0
	Maximum Value	1
	Default Value	0

OutA DN IdlValue	Parameter Number	38
This parameter determines the state that Output A assumes when the network is idle and Parameter 37 is set to 0. 0 = Open 1 = Closed	Access Rule	GET/SET
	Data Type	BOOL
	Group	User I/O
	Units	—
	Minimum Value	0
	Maximum Value	1
	Default Value	0

OutB Pr FltState	Parameter Number	39
This parameter with Parameter 40 defines how Output B responds when a trip. When set to 1, Output B continue to operate as command via the network. When set to 0, Output B opens or closes as determined by setting in Parameter 40.	Access Rule	GET/SET
	Data Type	BOOL
	Group	User I/O
	Units	—
	Minimum Value	0
	Maximum Value	1
	Default Value	0

OutB Pr FltValue	Parameter Number	40
This parameter determines the state the Out B assumes when a trip occurs and Parameter 39 is set to 0. 0 = Open 1 = Close	Access Rule	GET/SET
	Data Type	BOOL
	Group	User I/O
	Units	—
	Minimum Value	0
	Maximum Value	1
	Default Value	0

OutB DN FltState	Parameter Number	41
This parameter with Parameter 42 defines how Output B responds when a DeviceNet network fault occurs. When set to 1, Output B holds state before trip occurrence. When set to 0, Output B opens or closes as determined by setting in Parameter 42.	Access Rule	GET/SET
	Data Type	BOOL
	Group	User I/O
	Units	—
	Minimum Value	0
	Maximum Value	1
	Default Value	0

OutB DN FltValue	Parameter Number	42
This parameter determines the state that Output B assumes when a DeviceNet network fault occurs and Parameter 41 is set to 0. 0 = Open 1 = Close	Access Rule	GET/SET
	Data Type	BOOL
	Group	User I/O
	Units	—
	Minimum Value	0
	Maximum Value	1
	Default Value	0

OutB DN IdlState	Parameter Number	43
This parameter with Parameter 44 defines how Output B responds when the DeviceNet network is idle. When set to 0, Output B opens or closes as determined by the setting in Parameter 44. The DN Flt parameters supersede the Dn Idl parameters.	Access Rule	GET/SET
	Data Type	BOOL
	Group	User I/O
	Units	—
	Minimum Value	0
	Maximum Value	1
	Default Value	0

OutB DN IdlValue	Parameter Number	44
This parameter determines the state that Output B assumes when the network is idle and Parameter 43 is set to 0. 0 = Open 1 = Close	Access Rule	GET/SET
	Data Type	BOOL
	Group	User I/O
	Units	—
	Minimum Value	0
	Maximum Value	1
	Default Value	0

Miscellaneous Group

Keypad Mode	Parameter Number	45
This parameter selects if the keypad operation is maintained or momentary. 0 = Maintained 1 = Momentary	Access Rule	GET/SET
	Data Type	BOOL
	Group	Misc.
	Units	—
	Minimum Value	0
	Maximum Value	1
	Default Value	0

Keypad Disable	Parameter Number	46
	Access Rule	GET/SET
This parameter disables all keypad function except for the OFF and RESET buttons. 0 = Not Disabled 1 = Disabled	Data Type	BOOL
	Group	Misc.
	Units	—
	Minimum Value	0
	Maximum Value	1
	Default Value	0

Set to Defaults	Parameter Number	47
	Access Rule	GET/SET
This parameter if set to 1 sets the device to the factory defaults. 0 = No Operation 1 = Set to Defaults	Data Type	BOOL
	Group	Misc.
	Units	—
	Minimum Value	0
	Maximum Value	1
	Default Value	0

Base Enclosure	Parameter Number	56
	Access Rule	GET
Indicates the ArmorStart Base unit enclosure rating	Data Type	WORD
	Group	Misc.
0 = IP67 1 = NEMA 4X 2-15 = Reserved	Units	—
	Minimum Value	0
	Maximum Value	
	Default Value	0

Base Options	Parameter Number	57
	Access Rule	GET
Indicates the options for the ArmorStart Base unit	Data Type	WORD
	Group	Misc.
Bit 0 = Output Fuse Bit 1 = Safety Monitor Bit 2 = CP Fuse Detect Bits 3-7 = Reserved Bit 8 = 10A Base Bit 9 = 25A Base Bit 10-15 = Reserved	Units	—
	Minimum Value	0
	Maximum Value	
	Default Value	0

Wiring Options	Parameter Number	58
	Access Rule	GET
Bit 0 = Conduit Bit 1 = Round Media Bits 2-15 = Reserved	Data Type	WORD
	Group	Misc.
	Units	—
	Minimum Value	0
	Maximum Value	—
	Default Value	0

Starter Enclosure	Parameter Number	59
	Access Rule	GET
Bit 0 = IP67 Bit 1 = NEMA 4X Bits 2-15 reserved	Data Type	WORD
	Group	Misc.
	Units	—
	Minimum Value	0
	Maximum Value	65535
	Default Value	0

Starter Option	Parameter Number	60
	Access Rule	GET
Bit 0 = HOA Keypad Bit 1 = Safety Monitor Bit 2 = Source Brake Bit 3 = Control Brake Bit 4 = Dynamic Brake Bit 5 = Output Contactor Bit 6 = EMI Filter Bit 7 = 0-10V Analog In Bits 8-15 = Reserved	Data Type	WORD
	Group	Misc.
	Units	—
	Minimum Value	0
	Maximum Value	66535
	Default Value	0

Drive DeviceNet Group

Drive Control	Parameter Number	48
	Access Rule	GET
This parameter provides the status of drive parameters.	Data Type	WORD
	Group	Drive DeviceNet
	Units	—
	Minimum Value	0
	Maximum Value	4095
	Default Value	0

Bit												**Function**
11	**10**	**9**	**8**	**7**	**6**	**5**	**4**	**3**	**2**	**1**	**0**	
—	—	—	—	—	—	—	—	—	—	—	X	Accel 1 En
—	—	—	—	—	—	—	—	—	—	X	—	Accel 2 En
—	—	—	—	—	—	—	—	—	X	—	—	Decel 1 En
—	—	—	—	—	—	—	—	X	—	—	—	Decel 3 En
—	—	—	—	—	—	—	X	—	—	—	—	Freq Sel 0
—	—	—	—	—	—	X	—	—	—	—	—	Freq Sel 1
—	—	—	—	—	X	—	—	—	—	—	—	Freq Sel 2
—	—	—	—	X	—	—	—	—	—	—	—	Reserved
—	—	—	X	—	—	—	—	—	—	—	—	Drv In 1
—	—	X	—	—	—	—	—	—	—	—	—	Drv In 2
—	X	—	—	—	—	—	—	—	—	—	—	Drv In 3
X	—	—	—	—	—	—	—	—	—	—	—	Drv In 4

Drvin PrFltState	Parameter Number	49
This parameter, with Parameter 50, defines how the Drive Digital Inputs 1…2 responds when a protection trip occurs. When set to 1, Drive Digital Inputs 1…2 continue to operate as command via the network. When set to 0, Drive Digital Inputs 1…4 (Parameters 151…154) opens or closes as determined by setting in Parameter 50. 0 = Go to PrFlt Value 1 = Ignore PrFlt	Access Rule	GET/SET
	Data Type	BOOL
	Group	Drive DeviceNet
	Units	—
	Minimum Value	0
	Maximum Value	1
	Default Value	0

Drvin PrFltValue	Parameter Number	50
This parameter determines the state of Drive Digital Inputs 1…2, assumes when a trip occurs and Parameter 49 is set to 0. 0 = Open 1 = Close	Access Rule	GET/SET
	Data Type	BOOL
	Group	Drive DeviceNet
	Units	—
	Minimum Value	0
	Maximum Value	1
	Default Value	0

Drvin DNFltState	Parameter Number	51
This parameter, with Parameter 52, defines how the Drive Digital Inputs 1…2 responds when a DeviceNet fault occurs. When set to 1, Drive Digital Inputs 1…2 hold last state occurs. When set to 0, goes to DnFlt Value on DN faults as determined by Parameter 52. 0 = Go to Fault Value 1 = Hold Last State	Access Rule	GET/SET
	Data Type	BOOL
	Group	Drive DeviceNet
	Units	—
	Minimum Value	0
	Maximum Value	1
	Default Value	0

Drvin DNFlt Value	Parameter Number	52
This parameter determines if the drive commands in the event of a DeviceNet fault. 0 = OFF 1 = ON	Access Rule	GET/SET
	Data Type	BOOL
	Group	Drive DeviceNet
	Units	—
	Minimum Value	0
	Maximum Value	1
	Default Value	0

Drvin DNIdlState	Parameter Number	53
This parameter, with Parameter 54, defines how the Drive Digital Input 1…2 responds when a DeviceNet network is idle. When set to 1, hold to last state occurs. When set to 0, goes to DnFlt Value on DN faults as determined by Parameter 54. 0 = Go to Fault Value 1 = Hold Last State	Access Rule	GET/SET
	Data Type	BOOL
	Group	Drive DeviceNet
	Units	—
	Minimum Value	0
	Maximum Value	1
	Default Value	0

StrtrDN IdlValue This parameter determines the state that Digital Inputs 1 . . . 2 assume when the network is idle and Parameter 53 is set to 0. 0 = OFF 1 = ON	Parameter Number	54
	Access Rule	GET/SET
	Data Type	BOOL
	Group	Drive DeviceNet
	Units	—
	Minimum Value	0
	Maximum Value	1
	Default Value	0

ZIP Parameters

AutoRun Zip Enables ZIP data production on power up 0=Disable 1=Enable	Parameter Number	67
	Access Rule	GET/SET
	Data Type	BOOL
	Group	ZIP Parameters
	Units	—
	Minimum Value	0
	Maximum Value	1
	Default Value	0

Zone Produced EPR The Expected Packet Rate in msec. Defines the rate of at which ZIP data is produced. Defaults to 75 msec.	Parameter Number	68
	Access Rule	GET/SET
	Data Type	UINT
	Group	ZIP Parameters
	Units	msec
	Minimum Value	0
	Maximum Value	65535
	Default Value	75

Zone Produced PIT The Production Inhibit Time in msec. Defines the minimum time between Change of State data production	Parameter Number	69
	Access Rule	GET/SET
	Data Type	UINT
	Group	ZIP Parameters
	Units	msec
	Minimum Value	0
	Maximum Value	65535
	Default Value	75

Zone #1 MAC ID The node address of the device whose data is to be consumed for zone 1. When set to the value 64, data consumption is disabled. .	Parameter Number	70
	Access Rule	GET/SET
	Data Type	USINT
	Group	ZIP Parameters
	Units	—
	Minimum Value	0
	Maximum Value	64
	Default Value	64

Zone #2 MAC ID The node address of the device whose data is to be consumed for zone 2. When set to the value 64, data consumption is disabled.	Parameter Number	71
	Access Rule	GET/SET
	Data Type	USINT
	Group	ZIP Parameters
	Units	—
	Minimum Value	0
	Maximum Value	64
	Default Value	64

Zone #3 MAC ID The node address of the device whose data is to be consumed for zone 3. When set to the value 64, data consumption is disabled.	Parameter Number	72
	Access Rule	GET/SET
	Data Type	USINT
	Group	ZIP Parameters
	Units	—
	Minimum Value	0
	Maximum Value	64
	Default Value	64

Zone #4 MAC ID The node address of the device whose data is to be consumed for zone 4. When set to the value 64, data consumption is disabled.	Parameter Number	73
	Access Rule	GET/SET
	Data Type	USINT
	Group	ZIP Parameters
	Units	—
	Minimum Value	0
	Maximum Value	64
	Default Value	64

Zone #1 Health Read Only consumed connection status for zone 1 0 = Healthy 1 = Unhealthy	Parameter Number	74
	Access Rule	GET
	Data Type	BOOL
	Group	ZIP Parameters
	Units	—
	Minimum Value	0
	Maximum Value	1
	Default Value	0

Zone #2 Health Read Only consumed connection status for zone 2 0 = Healthy 1 = Unhealthy	Parameter Number	75
	Access Rule	GET
	Data Type	BOOL
	Group	ZIP Parameters
	Units	—
	Minimum Value	0
	Maximum Value	1
	Default Value	0

Zone #3 Health Read Only consumed connection status for zone 3 0 = Healthy 1 = Unhealthy	Parameter Number	76
	Access Rule	GET
	Data Type	BOOL
	Group	ZIP Parameters
	Units	—
	Minimum Value	0
	Maximum Value	1
	Default Value	0

Zone #4 Health Read Only consumed connection status for zone 4 0 = Healthy 1 = Unhealthy	Parameter Number	77
	Access Rule	GET
	Data Type	BOOL
	Group	ZIP Parameters
	Units	—
	Minimum Value	0
	Maximum Value	1
	Default Value	0

Zone #1 Mask Bit enumerated consumed data mask for zone 1. Each bit represents a byte in consumed data up to 8 bytes in length. If a mask bit is set, the corresponding consumed data byte is placed in the DeviceLogix data table	Parameter Number	78
	Access Rule	GET/SET
	Data Type	BYTE
	Group	ZIP Parameters
	Units	—
	Minimum Value	0
	Maximum Value	255
	Default Value	0

Zone #2 Mask Bit enumerated consumed data mask for zone 2. Each bit represents a byte in consumed data up to 8 bytes in length. If a mask bit is set, the corresponding consumed data byte is placed in the DeviceLogix data table	Parameter Number	79
	Access Rule	GET/SET
	Data Type	BYTE
	Group	ZIP Parameters
	Units	—
	Minimum Value	0
	Maximum Value	255
	Default Value	0

Zone #3 Mask Bit enumerated consumed data mask for zone 3. Each bit represents a byte in consumed data up to 8 bytes in length. If a mask bit is set, the corresponding consumed data byte is placed in the DeviceLogix data table	Parameter Number	80
	Access Rule	GET/SET
	Data Type	BYTE
	Group	ZIP Parameters
	Units	—
	Minimum Value	0
	Maximum Value	255
	Default Value	0

Zone #4 Mask Bit enumerated consumed data mask for zone 4. Each bit represents a byte in consumed data up to 8 bytes in length. If a mask bit is set, the corresponding consumed data byte is placed in the DeviceLogix data table	Parameter Number	81
	Access Rule	GET/SET
	Data Type	BYTE
	Group	ZIP Parameters
	Units	—
	Minimum Value	0
	Maximum Value	255
	Default Value	0

Zone #1 Offset The byte offset into the ZIP data portion of the DeviceLogix data table to place the chosen consumed data bytes for zone 1.	Parameter Number	82
	Access Rule	GET/SET
	Data Type	UINT
	Group	ZIP Parameters
	Units	—
	Minimum Value	0
	Maximum Value	7
	Default Value	0

Zone #2 Offset The byte offset into the ZIP data portion of the DeviceLogix data table to place the chosen consumed data bytes for zone 2.	Parameter Number	83
	Access Rule	GET/SET
	Data Type	UNIT
	Group	ZIP Parameters
	Units	—
	Minimum Value	0
	Maximum Value	7
	Default Value	0

Zone #3 Offset The byte offset into the ZIP data portion of the DeviceLogix data table to place the chosen consumed data bytes for zone 3.	Parameter Number	84
	Access Rule	GET/SET
	Data Type	UNIT
	Group	ZIP Parameters
	Units	—
	Minimum Value	0
	Maximum Value	1
	Default Value	0

Zone #4 Offset The byte offset into the ZIP data portion of the DeviceLogix data table to place the chosen consumed data bytes for zone 4.	Parameter Number	85
	Access Rule	GET/SET
	Data Type	UNIT
	Group	ZIP Parameters
	Units	—
	Minimum Value	0
	Maximum Value	1
	Default Value	0

Zone #1 EPR The Expected Packet Rate in msec. for the zone 1 consuming connection. If consumed data is not received in 4 times this value, the zone connection will time out and “Zone #1 Health” will report 1 = Not Healthy.	Parameter Number	86
	Access Rule	GET/SET
	Data Type	UINT
	Group	ZIP Parameters
	Units	msec
	Minimum Value	0
	Maximum Value	65535
	Default Value	75

Zone #2 EPR The Expected Packet Rate in msec. for the zone 1 consuming connection. If consumed data is not received in 4 times this value, the zone connection will time out and “Zone #2 Health” will report 1 = Not Healthy.	Parameter Number	87
	Access Rule	GET/SET
	Data Type	UNIT
	Group	ZIP Parameters
	Units	msec
	Minimum Value	0
	Maximum Value	65535
	Default Value	75

Zone #3 EPR The Expected Packet Rate in msec. for the zone 1 consuming connection. If consumed data is not received in 4 times this value, the zone connection will time out and “Zone #3 Health” will report 1 = Not Healthy.	Parameter Number	88
	Access Rule	GET/SET
	Data Type	UNIT
	Group	ZIP Parameters
	Units	msec
	Minimum Value	0
	Maximum Value	65535
	Default Value	75

Zone #4 EPR The Expected Packet Rate in msec. for the zone 1 consuming connection. If consumed data is not received in 4 times this value, the zone connection will time out and “Zone #4 Health” will report 1 = Not Healthy.	Parameter Number	89
	Access Rule	GET/SET
	Data Type	UNIT
	Group	ZIP Parameters
	Units	msec
	Minimum Value	0
	Maximum Value	65535
	Default Value	75

Zone #1 Control Zone 1 Control Word. Default Bits 0 and 1 set, all other bits clear. Bit0=Security Enable 1=Enable data security Bit1=COS Cnxn 1=Consume DNet Group 2 COS messages Bit2=Poll Cnxn 1=Consume DNet Group 2 Poll Response msgs. Bit3=Strobe Cnxn 1=Consume DNet Group 2 Strobe Response msgs. Bit4=Multicast Poll 1=Consume Multicast Poll Response messages.	Parameter Number	90
	Access Rule	GET/SET
	Data Type	BYTE
	Group	ZIP Parameters
	Units	—
	Minimum Value	0
	Maximum Value	65535
	Default Value	75

Zone #2 Control	Parameter Number	91
	Access Rule	GET/SET
Zone 2 Control Word. Default Bits 0 and 1 set, all other bits clear. Bit0=Security Enable 1=Enable data security Bit1=COS Cnxn 1=Consume DNet Group 2 COS messages Bit2=Poll Cnxn 1=Consume DNet Group 2 Poll Response msgs. Bit3=Strobe Cnxn 1=Consume DNet Group 2 Strobe Response msgs. Bit4=Multicast Poll 1=Consume Multicast Poll Response messages	Data Type	BYTE
	Group	ZIP Parameters
	Units	—
	Minimum Value	0
	Maximum Value	3
	Default Value	3

Zone #3 Control	Parameter Number	92
	Access Rule	GET/SET
Zone 3 Control Word. Default Bits 0 and 1 set, all other bits clear. Bit0=Security Enable 1=Enable data security Bit1=COS Cnxn 1=Consume DNet Group 2 COS messages Bit2=Poll Cnxn 1=Consume DNet Group 2 Poll Response msgs. Bit3=Strobe Cnxn 1=Consume DNet Group 2 Strobe Response msgs. Bit4=Multicast Poll 1=Consume Multicast Poll Response messages	Data Type	BYTE
	Group	ZIP Parameters
	Units	—
	Minimum Value	0
	Maximum Value	3
	Default Value	3

Zone #4 Control	Parameter Number	93
	Access Rule	GET/SET
Zone 3 Control Word. Default Bits 0 and 1 set, all other bits clear. Bit0=Security Enable 1=Enable data security Bit1=COS Cnxn 1=Consume DNet Group 2 COS messages Bit2=Poll Cnxn 1=Consume DNet Group 2 Poll Response msgs. Bit3=Strobe Cnxn 1=Consume DNet Group 2 Strobe Response msgs. Bit4=Multicast Poll 1=Consume Multicast Poll Response messages	Data Type	BYTE
	Group	ZIP Parameters
	Units	—
	Minimum Value	0
	Maximum Value	3
	Default Value	3

Zone #1 Key	Parameter Number	94
	Access Rule	GET/SET
When the "Security Enable" bit for zone 1 is enabled, this value must match the value of the Device Value Key parameter in the device whose data is being consumed for zone 1.	Data Type	UINT
	Group	ZIP Parameters
	Units	—
	Minimum Value	0
	Maximum Value	65535
	Default Value	0

Zone #2 Key	Parameter Number	95
	Access Rule	GET/SET
When the "Security Enable" bit for zone 1 is enabled, this value must match the value of the Device Value Key parameter in the device whose data is being consumed for zone 2.	Data Type	UINT
	Group	ZIP Parameters
	Units	—
	Minimum Value	0
	Maximum Value	65535
	Default Value	0

Zone #3 Key When the "Security Enable" bit for zone 1 is enabled, this value must match the value of the Device Value Key parameter in the device whose data is being consumed for zone 3.	Parameter Number	96
	Access Rule	GET/SET
	Data Type	UINT
	Group	ZIP Parameters
	Units	—
	Minimum Value	0
	Maximum Value	65535
	Default Value	0

Zone #4 KEY When the "Security Enable" bit for zone 1 is enabled, this value must match the value of the Device Value Key parameter in the device whose data is being consumed for zone 4	Parameter Number	97
	Access Rule	GET/SET
	Data Type	UINT
	Group	ZIP Parameters
	Units	—
	Minimum Value	0
	Maximum Value	65535
	Default Value	0

Device Value Key This value is produced in the last 2 bytes of data when one of the ZIP assemblies is chosen for data production.	Parameter Number	98
	Access Rule	GET/SET
	Data Type	UINT
	Group	ZIP Parameters
	Units	—
	Minimum Value	0
	Maximum Value	65535
	Default Value	0

Zone Ctrl Enable Global enable for ZIP peer-to-peer messaging. This parameter must be disabled before any changes to the ZIP configuration for the device can be made. 0 = Disable 1 = Enable	Parameter Number	99
	Access Rule	GET/SET
	Data Type	BOOL
	Group	ZIP Parameters
	Units	—
	Minimum Value	0
	Maximum Value	1
	Default Value	0

Display Group

Output Freq Output frequency present at T1, T2, T3.	Parameter Number	101
	Related Parameters	102, 110, 134, 135, 138
	Access Rule	GET
	Data Type	UINT
	Group	Display Group
	Units	0.1 Hz
	Minimum Value	0.0
	Maximum Value	240.0 Hz
	Default Value	Read Only

Commanded Freq Value of the active frequency command. Displays the commanded frequency even if the drive is not running.	Parameter Number	102
	Related Parameters	101, 113, 134, 135, 138
	Access Rule	GET
	Data Type	UINT
	Group	Display Group
	Units	0.1 Hz
	Minimum Value	0.0
	Maximum Value	240.0 Hz
	Default Value	Read Only

Output Current Output Current present at T1, T2, T3.	Parameter Number	103
	Access Rule	GET
	Data Type	UINT
	Group	Display Group
	Units	0.01
	Minimum Value	0.00
	Maximum Value	Drive rated amps x 2
	Default Value	Read Only

Output Voltage Output Current present at T1, T2, T3.	Parameter Number	104
	Related Parameters	131, 184, 188
	Access Rule	GET
	Data Type	UINT
	Group	Display Group
	Units	1V AC
	Minimum Value	0
	Maximum Value	230V, 460V, or 600V AC
	Default Value	Read Only

DC Bus Voltage Present DC Bus voltage level.	Parameter Number	105
	Access Rule	GET
	Data Type	UINT
	Group	Display Group
	Units	1V DC
	Minimum Value	Based on Drive Rating
	Maximum Value	
	Default Value	Read Only

Drive Status Present operating condition of the drive. Bit 0 = running Bit 1 = Forward Bit 2 = Accelerating Bit 3 = Decelerating	Parameter Number	106
	Related Parameter	195
	Access Rule	GET
	Data Type	WORD
	Group	Display Group
	Units	—
	Minimum Value	0
	Maximum Value	1
	Default Value	Read Only

Fault 1 Code	Parameter Number	107
A code that represents drive fault. The code appears in this parameter as the most recent fault that has occurred.	Access Rule	GET
	Data Type	UINT
	Group	Display Group
	Units	—
	Minimum Value	F122
	Maximum Value	F2
	Default Value	Read Only

Fault 2 Code	Parameter Number	108
A code that represents a drive fault. The code appears in this parameter as the second most recent fault that has occurred.	Access Rule	GET
	Data Type	UINT
	Group	Display Group
	Units	—
	Minimum Value	F122
	Maximum Value	F2
	Default Value	Read Only

Fault 3 Code	Parameter Number	109
A code that represents a drive fault. The code appears in this parameter as the third most recent fault that has occurred.	Access Rule	GET
	Data Type	UINT
	Group	Display Group
	Units	—
	Minimum Value	F122
	Maximum Value	F2
	Default Value	Read Only

Process Display	Parameter Number	110
The output frequency that is scaled by the process factor (Parameter 199).	Related Parameter	101, 199, 215, 216
	Access Rule	GET
	Data Type	LINT
	Group	Display Group
	Units	0.01…1
	Minimum Value	0.00
	Maximum Value	9999
	Default Value	Read Only

Control Source	Parameter Number	112
Displays the source of the Start Command and Speed Reference. Valid Start Commands for the Bulletin 284 ArmorStart are the following: 1 = Internal Frequency 4 = Preset Freq X 5 = Internal communication 9 = Jog Freq	Related Parameters	136, 138, 151, 152
	Access Rule	GET
	Data Type	UINT
	Group	Display Group
	Units	1
	Minimum Value	0
	Maximum Value	9
	Default Value	5

Contrl In Status	Parameter Number	113
	Related Parameters	102, 134, 135
Status of the control terminal block control inputs: Bit 0 = Start/Run FWD input Bit 1 = Direction/Run REV Input Bit 2 = Stop Input Bit 3 = Dynamic Brake Transistor On ❶	Access Rule	GET
	Data Type	UINT
	Group	Display Group
	Units	1
	Minimum Value	0
	Maximum Value	15
	Default Value	0

❶ Valid for DeviceNet Sensorless Vector Control and Volts per Hertz.

Dig In Status	Parameter Number	114
	Related Parameters	151, 152
Status of the control terminal block digital inputs: Bit 0 = Digital IN 1 Sel Bit 1 = Digital IN 2 Sel	Access Rule	GET
	Data Type	UINT
	Group	Display Group
	Units	1
	Minimum Value	0
	Maximum Value	15
	Default Value	0

Comm Status	Parameter Number	115
	Related Parameters	203…207
Status of communications ports: Bit 0 = Receiving Data Bit 1 = Transmitting Data Bit 2 = RS485 Bit 3 = Communication Error	Access Rule	GET
	Data Type	UINT
	Group	Display Group
	Units	1
	Minimum Value	0
	Maximum Value	15
	Default Value	0

Elapsed Run Time	Parameter Number	118
	Access Rule	GET
Accumulated time drive is outputting power. Time is displayed in 10 hour increments.	Data Type	UINT
	Group	Display Group
	Units	1 = 10 hrs
	Minimum Value	0
	Maximum Value	9999
	Default Value	Read Only

Drive Temp	Parameter Number	124
	Access Rule	GET
Present operating temperature of the drive power section.	Data Type	UINT
	Group	Display Group
	Units	1°C
	Minimum Value	0
	Maximum Value	120
	Default Value	Read Only

Basic Program Group

Motor NP Volts		
Set to the motor nameplate rated volts. Stop drive before changing this parameter.	Parameter Number	131
	Related Parameters	104, 184
	Access Rule	GET/SET
	Data Type	UINT
	Group	Basic Program Setup
	Units	1V AC
	Minimum Value	20
	Maximum Value	240V, 460V, or 600V AC
	Default Value	Based on Drive Rating

Motor NP Hertz		
Set to the motor nameplate rated frequency. Stop drive before changing this parameter.	Parameter Number	132
	Related Parameters	184, 190
	Access Rule	GET/SET
	Data Type	UINT
	Group	Basic Program Setup
	Units	1 Hz
	Minimum Value	10
	Maximum Value	240
	Default Value	60 Hz

Motor OL Current		
Set to the maximum allowable current. The drive will fault on an F7 Motor Over load if the value of this parameter is exceeded by 150% for 60 seconds.	Parameter Number	133
	Related Parameters	155, 189, 190, 198, 214
	Access Rule	GET/SET
	Data Type	UINT
	Group	Basic Program Setup
	Units	0.1 A
	Minimum Value	0.0
	Maximum Value	Drive rated amps x 2
	Default Value	Based on Drive Rating

Minimum Freq		
Sets the lowest frequency that the drive outputs continuously.	Parameter Number	134
	Related Parameters	101, 102, 113, 135, 210, 212, 215
	Access Rule	GET/SET
	Data Type	UINT
	Group	Basic Program Setup
	Units	0.1 Hz
	Minimum Value	0.0
	Maximum Value	240
	Default Value	0.0

Maximum Freq	Parameter Number	135
Stop drive before changing this parameter. Sets the Highest frequency that the drive outputs continuously.	Related Parameters	101, 102, 113, 134, 178, 211, 213, 215
	Access Rule	GET/SET
	Data Type	UINT
	Group	Basic Program Setup
	Units	0.1 Hz
	Minimum Value	0.0
	Maximum Value	240
	Default Value	60.0

Stop Mode	Parameter Number	137
Valid Stop Mode for the Bulletin 284 ArmorStart are the following: 0 = **Ramp, CF** Ramp to Stop. **Stop** command clears active fault. 1 = **Coast, CF** Coast to Stop. **Stop** command clears active fault. 2 = **DC Brake,CF** DC Injection Braking Stop. **Stop** command clears active fault. 3 = **DCBrkAuto, CF** DC injection Braking with Auto Shutoff. Standard DC Injection Braking for value set in Parameter 180 (DC Brake Time) or Drive shuts off if the drive detects that the motor is stopped. **Stop** command clears active fault 4 = **Ramp** Ramp to Stop 5 = **Coast** Coast to Stop 6 = **DC Brake** DC Injection Braking Stop 7 = **DC BrakeAuto** DC Injection Stop with Auto Shutoff. Standard DC Injection Braking for value set in Parameter 180 (DC Brake Time) or Drive shuts off if current limit is exceeded	Related Parameters	136, 180, 182, 205
	Access Rule	GET/SET
	Data Type	UINT
	Group	Basic Program Setup
	Units	—
	Minimum Value	0
	Maximum Value	7
	Default Value	0

Speed Reference	Parameter Number	138
Valid Speed References for the Bulletin 284 ArmorStart are the following: 1 = Internal Freq 4 = Preset Freq 5 = Comm port	Related Parameters	101, 102, 112, 139, 140, 151, 152, 169, 170…173, 210, 211, 213, 232
	Access Rule	GET/SET
	Data Type	UINT
	Group	Basic Program Setup
	Units	—
	Minimum Value	0
	Maximum Value	5
	Default Value	5

Accel Time 1	Parameter Number	139
Sets the rate of acceleration for all speed increases. $\frac{\text{Maximum Freq}}{\text{Accel Time}} = \text{Accel Rate}$	Related Parameters	138, 140, 151, 152, 167, 170…173
	Access Rule	GET/SET
	Data Type	UINT
	Group	Basic Program Setup
	Units	0.1 sec
	Minimum Value	0.0 sec
	Maximum Value	600.0 sec
	Default Value	10.0 sec

Decel Time 1	Parameter Number	140
	Related Parameters	138, 139, 151, 152, 168, 170…173
Sets the rate of deceleration for all speed decreases.	Access Rule	GET/SET
$\frac{\text{Maximum Freq}}{\text{Decel Time}} = \text{Decel Rate}$	Data Type	UINT
	Group	Basic Program Setup
	Units	0.1 sec
	Minimum Value	0.1 sec
	Maximum Value	600.0 sec
	Default Value	10.0 sec

Reset To Defaults	Parameter Number	141
	Access Rule	GET/SET
Stop drive before changing this parameter.	Data Type	BOOL
Resets all parameter values to factory defaults. 0 = Ready/Idle (Default) 1 = Factory Rset	Group	Basic Program Group
	Units	—
	Minimum Value	1
	Maximum Value	1
	Default Value	0

Motor OL Ret	Parameter Number	143
Enables/disables the Motor overload Retention function. When Enabled, the value that is held in the motor overload counter is saved at power-down and restored at power-up. A change to this parameter setting resets the counter. 0 = Disabled (Default) 1 = Enabled	Access Rule	GET/SET
	Data Type	BOOL
	Group	Basic Program Group
	Units	—
	Minimum Value	0
	Maximum Value	1
	Default Value	0

Advanced Program Group

151 (Digital In 1 SEL) **152 (Digital In 2 SEL)** Stop drive before changing this parameter. Selects the function for the digital inputs. See Table 9 -for details	Parameter Number	151, 152
	Related Parameters	112, 114, 138…140, 167, 168, 170…173, 178, 179
	Access Rule	GET/SET
	Data Type	UINT
	Group	Advanced Program Group
	Units	—
	Minimum Value	0
	Maximum Value	26
	Default Value	4

Table 9 - Digital Inputs Options

Options	Description	
1	Acc & Dec2	• When active, Parameter 167 (Accel Time 2) and Parameter 168 (Decel Time 2) are used for all ramp rates except Jog. • Can only be tied to one input.
2	Jog	• When input is present, drive accelerates according to the value set in Parameter 179 (Jog Accel/Decel) and ramps to the value set in Parameter 178 (Jog Frequency). • When the input is removed, drive ramps to a stop according to the value set in Parameter 179 (Jog Accel/Decel). • A valid **Start** command overrides this input.
3	Aux Fault	When enable, an F2 **Auxiliary Input** fault occurs when the input is removed.
4	**Preset Freq** (Parameters 151 and 152 Default)	See Parameters 170…173 and 174…177.
27 ❶	Em Brk Rise	If Em Brake function enabled, this input releases the brake.

❶ Provides programmable control of Em Brk via digital input (1...4).

155 (Relay Out Sel) Sets the condition that changes the state of the output relay contacts. See Table 10 -for details	Parameter Number	155
	Related Parameters	133, 156, 192
	Access Rule	GET/SET
	Data Type	UINT
	Group	Advanced Program Group
	Units	—
	Minimum Value	0
	Maximum Value	21
	Default Value	6

Table 10 - Relay Out Sel Options

Options	Description	
0	**Ready/Fault** (Default)	Relay changes state when power is applied. This indicates that the drive is ready for operation. Relay returns drive to shelf state when power is removed or a fault occurs.
1	At Frequency	Drive reached commanded frequency.
6	Above Freq	Drive exceeds the frequency (Hz) value set in Parameter 156 (Relay Out Level) Use Parameter 156 to set threshold.
7	Above Cur	Drive exceeds the current (% Amps) value set in Parameter 156 (Relay Out Level) Use Parameter 156 to set threshold.
20	ParamControl	Enables the output to be controlled over the network communications by writing to Parameter 156 (Relay Out Level) (0 = Off, 1 = ON).

Relay Out Level

Sets the trip point for the digital output relay if the value of Parameter 155 (Relay Out Sel) is 6, 7, 8, 10, 16, 17, 18, or 20.

Parameter 155 Setting	Parameter 156 Min./Max.
6	0/400 Hz
7	0/180%
8	0/815V
10	0/100%
20	0/1

Parameter Number	156
Related Parameters	155
Access Rule	GET/SET
Data Type	UINT
Group	Advanced Program Group
Units	0.1
Minimum Value	0.0
Maximum Value	9999
Default Value	2.0

Accel Time 2

When active, sets the rate of acceleration for all speed increases except for jog.

$$\frac{\text{Maximum Freq}}{\text{Accel Time}} = \text{Accel Rate}$$

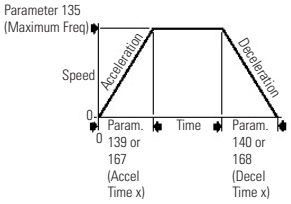

Parameter Number	167
Related Parameters	139
Access Rule	GET/SET
Data Type	UINT
Group	Advanced Program Group
Units	0.1 sec
Minimum Value	0.0
Maximum Value	600.0
Default Value	20.0

Decel Time 2

When active, sets the rate of deceleration for all speed decreases except for jog.

$$\frac{\text{Maximum Freq}}{\text{Decel Time}} = \text{Decel Rate}$$

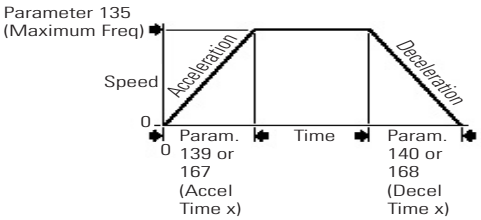

Parameter Number	168
Related Parameters	140
Access Rule	GET/SET
Data Type	UINT
Group	Advanced Program Group
Units	0.1 sec
Minimum Value	0.0
Maximum Value	600.0
Default Value	20.0

Internal Freq

Provide the frequency command to drive when Parameter 138 (Speed Reference) is set to 1 **Internal Freq**. When enabled, this parameter changes the frequency command in real time.

Parameter Number	169
Related Parameters	138
Access Rule	GET/SET
Data Type	UINT
Group	Advanced Program Group
Units	0.1 Hz
Minimum Value	0.0
Maximum Value	240.0
Default Value	60.0

170 (Preset Freq 0) ❶ **171 (Preset Freq 1)** **172 (Preset Freq 2)** **173 (Preset Freq 3)**	Parameter Number	170…173
	Related Parameters	138, 139, 140, 151, 152, 167, 168
	Access Rule	GET/SET
	Data Type	UINT
	Group	Advanced Program Group
	Units	0.1 Hz
	Minimum Value	0.0
	Maximum Value	400.0
	Default Value	See Table 11

❶ To activate 170 (Preset Freq 0) set 138 (Speed Reference) to option 4 **Preset Freq 0-3**.

Table 11 - 170…173 Preset Freq Options

Values Provides a fixed frequency command value when 151…153 (Digital Inx Sel) is set to 4 **Preset Frequencies**.			170 Default ❷	0.0 Hz
			171 Default	5.0 Hz
			172 Default	10.0 Hz
			173 Default	20.0 Hz
			Min./Max.	0.0/400.0 Hz
			Display	0.1 Hz
Input State of Digital In 1 (I/O Terminal 05 when Parameter 151 = 4)	**Input State of Digital In 2 (I/O Terminal 06 when Parameter 152 = 4)**	**Input State of Digital In 3 (I/O Terminal 07 when Parameter 153 = 4)**	**Frequency Source**	**Accel/Decel Parameter Used ❸**
0	0	0	170 (Preset Freq 0)	(Accel Time 1)/(Decel Time 1)
1	0	0	171 (Preset Freq 1)	(Accel Time 1)/(Decel Time 1)
0	1	0	172 (Preset Freq 2)	(Accel Time 2)/(Decel Time 2)
1	1	0	173 (Preset Freq 3)	(Accel Time 2)/(Decel Time 2)

❷ To activate 170 (Preset Freq 0) set 138 (Speed Reference) to option 4 **Preset Freq 0-3**.
❸ When a Digital Input is set to **Accel 2 and Decel 2**, and the input is active, that input overrides the settings in this table.

Jog Frequency Sets the output frequency when the jog command is issued.	Parameter Number	178
	Related Parameters	135, 151, 152, 179
	Access Rule	GET/SET
	Data Type	UINT
	Group	Advanced Program Group
	Units	0.1 Hz
	Minimum Value	0.0
	Maximum Value	240.0
	Default Value	10.0

Jog Accel/Decel Sets the acceleration and deceleration time when a jog command is issued.	Parameter Number	179
	Related Parameters	151, 152, 178
	Access Rule	GET/SET
	Data Type	UINT
	Group	Advanced Program Group
	Units	0.1 sec
	Minimum Value	0.1
	Maximum Value	600.0
	Default Value	10.0

DC Brake Time	Parameter Number	180
Sets the length of time that DC brake current is injected into the motor. See Parameter 181 DC Brake Level.	Related Parameters	137, 181
	Access Rule	GET/SET
	Data Type	UINT
	Group	Advanced Program Group
	Units	0.1 sec
	Minimum Value	0.0
	Maximum Value	90.0
	Default Value	0.0

DC Brake Level	Parameter Number	181
Defines the maximum DC brake current, in amps, applied to the motor when Parameter 137 (Stop Mode) is set to either **Ramp** or **DC Brake**.	Related Parameters	137, 180
	Access Rule	GET/SET
	Data Type	UINT
	Group	Advanced Program Group
	Units	0.1 A
	Minimum Value	0.0
	Maximum Value	Drive rated amps X 1.8
	Default Value	Drive rated amps X 0.05

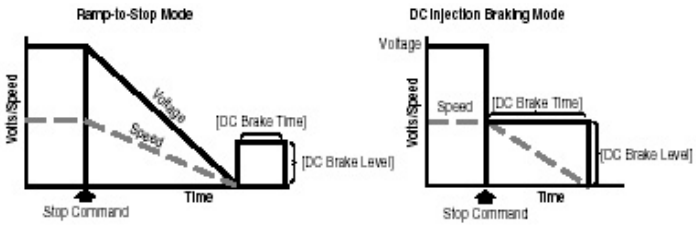

ATTENTION: If a hazard of injury due to movement of equipment or material exists, an auxiliary mechanical braking device must be used.

ATTENTION: This feature should not be used with synchronous or permanent magnet motors. Motors may be demagnetized during braking.

DB Resistor Sel	Parameter Number	182
Stop drive before changing this parameter.	Related Parameters	137
	Access Rule	GET/SET
Enables/disables external dynamic braking.	Data Type	UINT
	Group	Advanced Program Group
	Units	1
	Minimum Value	0
	Maximum Value	99
	Default Value	0

Setting	Min./Max.
0	Disabled
1	Normal RA Res (5% Duty Cycle)
2	No Protection (100% Duty Cycle)
3…99	x% Duty Cycle Limited (3…99% of Duty Cycle)

S Curve % Sets the percentage of acceleration or deceleration time that is applied to ramp as S Curve. Time is added, half at the beginning and half at the end of the ramp.	Parameter Number	183
	Access Rule	GET/SET
	Data Type	UINT
	Group	Advanced Program Group
	Units	1%
	Minimum Value	0
	Maximum Value	100
	Default Value	0% disabled

Figure 34 - S Curve Detail

Example:
Accel Time = 10 Seconds
S Curve Setting = 50%
S Curve Time = 10 × 0.5 = 5 Seconds
Total Time = 10 + 5 = 15 Seconds

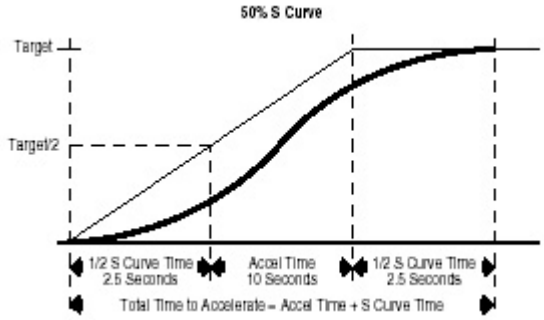

Boost Select	Parameter Number	184
Sets the boost voltage (% of Parameter 131 [Motor NP Volts]) and redefines the Volts per Hz curve. Active when Parameter 225 (Torque Perf Mode) = 0V/Hz Drive may add additional voltage unless Option 5 is selected.	Related Parameters	104, 131, 132
	Access Rule	GET/SET
	Data Type	UINT
	Group	Advanced Program Group
See Table 12 - for details	Units	—
	Minimum Value	1
	Maximum Value	14
	Default Value	8

Table 12 - Boost Select Options

Options	Description	
1	30.0, VT	Variable Torque (Typical fan/pump curves)
2	35.0, VT	
3	40.0, VT	
4	45.0, VT	
5	0.0 no IR	Constant Torque
6	0.0	
7	2.5, CT (Default for 5 Hp/3.7 kW Drive)	
8	5.0, CT Default	
9	7.5,CT	
10	10.0,CT	
11	12.5,CT	
12	15.0,CT	
13	17.5,CT	
14	20.0,CT	

Figure 35 -

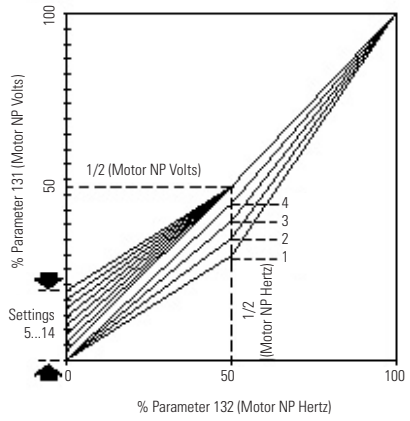

Maximum Voltage Sets the highest voltage that the drive outputs.	Parameter Number	188
	Related Parameters	104
	Access Rule	GET/SET
	Data Type	UINT
	Group	Advanced Program Group
	Units	1V AC
	Minimum Value	20V AC
	Maximum Value	Drive Rated Volts
	Default Value	Drive Rated Volts

Current Limit Maximum output current that is allowed before current limiting occurs	Parameter Number	189
	Related Parameters	133
	Access Rule	GET/SET
	Data Type	UINT
	Group	Advanced Program Group
	Units	0.1 A
	Minimum Value	0.1 A
	Maximum Value	Drive rated amps X 1.8
	Default Value	Drive rated amps X 1.5

Motor OL Select Drive provides Class 10 motor overload protection. Setting 0…2 select the derating factor for I^2t overload function. 0 = No Derate 1 = Min. Derate 2 = Max. Derate	Parameter Number	190
	Related Parameters	132
	Access Rule	GET/SET
	Data Type	UINT
	Group	Advanced Program Group
	Units	1
	Minimum Value	0
	Maximum Value	2
	Default Value	0

Figure 36 - Overload Trip Curves

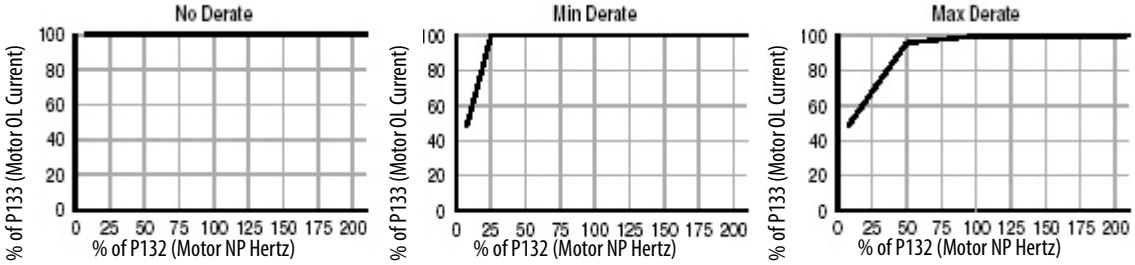

PWM Frequency Sets the carrier frequency the PWM output waveform. Figure 37 provides derating guidelines that are based on the PWM frequency setting.	Parameter Number	191
	Access Rule	GET/SET
	Data Type	UINT
	Group	Advanced Program Group
	Units	0.l Hz
	Minimum Value	2.0 Hz
	Maximum Value	16.0 Hz
	Default Value	4.0 Hz

Figure 37 -

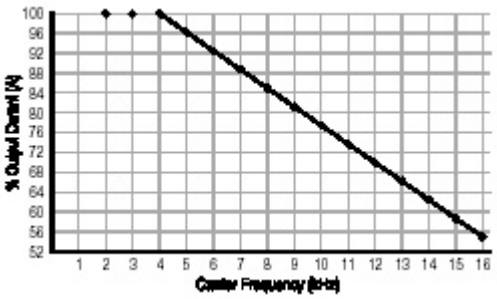

Auto Rstrt Tries Set the maximum number of times the drive attempts to reset a fault and restart.	Parameter Number	192
	Related Parameter	155, 193
	Access Rule	GET/SET
	Data Type	UINT
	Group	Advanced Program Group
	Units	1
	Minimum Value	0
	Maximum Value	9
	Default Value	0

Clear a Type 1 Fault and Restart the Drive

1. Set Parameter 192 (Auto Rstrt Tries) to a value other than 0.
2. Set Parameter 193 (AutoRstrt Delay) to a value other than 0.

Clear an Overvoltage, Undervoltage, or Heatsink OvrTmp Fault without Restarting the Drive

1. Set Parameter 192 (Auto Rstrt Tries) to a value other than 0.
2. Set Parameter 193 (AutoRstrt Delay) to 0.

ATTENTION: Equipment damage and/or personal injury may result if this parameter is used in an inappropriate application. Do not use this function without considering applicable local, national, and international codes, standards, regulations, or industry guidelines.

Auto Rstrt Delay	Parameter Number	193
Sets time between restart attempts when Parameter 192 (Auto Rstrt Tries) is set to a value other than zero.	Related Parameters	192
	Access Rule	GET/SET
	Data Type	UINT
	Group	Advanced Program Group
	Units	0.1 sec
	Minimum Value	0.0
	Maximum Value	300.0 sec
	Default Value	1.0 sec

Reverse Disable	Parameter Number	195
Stop drive before changing this parameter.	Related Parameters	106
	Access Rule	GET/SET
Enables/disables the function that allows the direction of the motor rotation to be changed. The reverse command may come from a digital command or serial command. All reverse inputs including two-wire Run Reverse, will be ignored with reverse disabled. 0 = Disabled 1 = Enabled	Data Type	UINT
	Group	Advanced Program Group
	Units	—
	Minimum Value	0
	Maximum Value	1
	Default Value	0

Flying Start En	Parameter Number	196
Sets the condition that allows the drive to reconnect to a spinning motor at actual RPM. 0 = Disabled 1 = Enabled	Access Rule	GET/SET
	Data Type	UINT
	Group	Advanced Program Group
	Units	—
	Minimum Value	0
	Maximum Value	1
	Default Value	0

Compensation	Parameter Number	197
Enables/disables correction options that may improve problems with motor instability 0 = Disabled 1 = Electrical (Default) Some drive/motor combinations have inherent instabilities that are exhibited as non-sinusoidal motor currents. This setting attempts to correct this condition 2 = Mechanical Some motor/load combinations have mechanical resonances that can be excited by the drive current regulator. This setting slows down the current regulator response and attempts to correct this condition. 3 = Both	Access Rule	GET/SET
	Data Type	UINT
	Group	Advanced Program Group
	Units	—
	Minimum Value	0
	Maximum Value	3
	Default Value	1

SW Current Trip	Parameter Number	198
	Related Parameters	133
Enables/disables a software instantaneous (within 100 ms) current trip.	Access Rule	GET/SET
	Data Type	UINT
	Group	Advanced Program Group
	Units	0.1 A
	Minimum Value	0.0
	Maximum Value	Drive rated amps x 2
	Default Value	0.0 (Disabled)

Process Factor	Parameter Number	199
	Related Parameters	110
Scales the output frequency value that is displayed by Parameter 110 (Process Display). Output Freq x Process Factor = Process Display	Access Rule	GET/SET
	Data Type	UINT
	Group	Advanced Program Group
	Units	0.1
	Minimum Value	0.1
	Maximum Value	999.9
	Default Value	30.0

Fault Clear	Parameter Number	200
	Access Rule	GET/SET
Stop drive before changing this parameter.	Data Type	UINT
	Group	Advanced Program Group
Resets a fault and clears the fault queue. Used primarily to clear a fault over network communications. 0 = Ready/Idle (Default) 1 = Reset Fault 2 = Clear Buffer (Parameters 107 . . . 109 [Fault x Code])	Units	—
	Minimum Value	0
	Maximum Value	2
	Default Value	0

Program Lock	Parameter Number	201
	Access Rule	GET/SET
Protects parameters against change by unauthorized personnel. 0 = Unlocked 1 = Locked	Data Type	UINT
	Group	Advanced Program Group
	Units	—
	Minimum Value	0
	Maximum Value	1
	Default Value	0

Comm Loss Action	Parameter Number	205
	Related Parameters	115, 137, 206
Selects the drive's response to a loss of the communication connection or excessive communication errors. 0 = Fault (Default) Drive will fault on an F81 Comm Loss and coast to stop 1 = Coast Stop Stops drive via coast to stop 2 = Stop Stops via Parameter 137 (Stop Mode) setting 3 = Continu Last Drive continues operating at communication commanded speed that is saved in RAM	Access Rule	GET/SET
	Data Type	UINT
	Group	Advanced Program Group
	Units	—
	Minimum Value	0
	Maximum Value	3
	Default Value	0

Comm Loss Time Sets the time that the drive remain in communication loss before implanting the option selected in Parameter 205 (Comm Loss Action).	Parameter Number	206
	Related Parameters	115, 205
	Access Rule	GET/SET
	Data Type	UINT
	Group	Advanced Program Group
	Units	0.1 sec
	Minimum Value	0.1 sec
	Maximum Value	60.0 sec
	Default Value	15.0 sec

Slip Hertz @ FLA Compensates for the inherent slip in an induction motor. This frequency is added to the commanded output frequency based on motor current.	Parameter Number	214
	Related Parameter	133
	Access Rule	GET/SET
	Data Type	UINT
	Group	Advanced Program Group
	Units	0.1 Hz
	Minimum Value	0.0 Hz
	Maximum Value	10.0 Hz
	Default Value	2.0 Hz

Process Time Lo Scales the time value when the drive is running at Parameter 134 (Minimum Freq). When set to a value other than zero, Parameter 110 (Process Display) indicates the duration of the process.	Parameter Number	215
	Related Parameters	110, 134
	Access Rule	GET/SET
	Data Type	UNIT
	Group	Advanced Setup
	Units	Hz
	Minimum Value	0.00
	Maximum Value	99.99
	Default Value	0.00

Process Time Hi Scales the time value when the drive is running at Parameter 135 (Maximum Freq). When set to a value other than zero, Parameter 110 (Process Display) indicates the duration of the process.	Parameter Number	216
	Related Parameters	110, 135
	Access Rule	GET/SET
	Data Type	UNIT
	Group	Advanced Setup
	Units	Hz
	Minimum Value	0.00
	Maximum Value	99.99
	Default Value	0.00

Notes:

Bulletin 284 Programmable Parameters for Sensorless Vector Controllers

This chapter describes each programmable parameter and its function for Bulletin 284 Sensorless Vector Controllers.

Parameter Programming

Each distributed motor controller type has a common set of parameters followed by a set of parameters that pertain to the individual starter type.

See *Chapter 7, DeviceNet Commissioning*, for instructions in using RSNetWorx for DeviceNet to modify parameter settings.

IMPORTANT	Resetting the Factory Default Values Parameter 47, *Set to Defaults*, allows the installer to reset all parameter to the factory default values. It also resets the MAC ID to its factory default after DeviceNet Power is cycled if switches are set >63.

IMPORTANT	Parameter setting changes downloaded to the ArmorStart take effect immediately, even during a running status.

IMPORTANT	Parameter setting changes made in a configuration tool such as RSNetWorx for DeviceNet do not take effect in the ArmorStart until the installer applies or downloads the new settings to the device.

Parameter Group Listing

The Bulletin 284D ArmorStart contains ten parameter groups. The parameters that are shown in the DeviceLogix, DeviceNet, Starter Protection, User I/O, Misc. Parameter, Drive DeviceNet, Display Group, Basic Program, and Advanced Program are discussed in this chapter.

Table 13 - Parameter Group Listing

DeviceLogix	DeviceNet	Starter Protection	User I/O	Miscellaneous	Drive DeviceNet
1 Hdw Inputs	**10** Autobaud Enable	**22** Breaker Type	**30** Off-to-On Delay	**45** Keypad Mode	**48** Drive Control
2 Network Inputs	**11** Consumed IO Assy	**23** PrFltResetMode	**31** On-to-Off Delay	**46** Keypad Disable	**49** Drvin PrFltState
3 Network Outputs	**12** Produced IO Assy	**24** Pr Fault Enable	**32** In Sink/Source	**47** Set To Defaults	**50** Drvin PrFltValue
4 Trip Status	**13** Prod Assy Word 0	**25** Pr Fault Reset	**33** OutA Pr FltState		**51** Drvin DNFltState
5 Starter Status	**14** Prod Assy Word 1	**26** StrtrDN FltState	**34** OutA Pr FltValue		**52** Drvin DNFltValue
6 DNet Status	**15** Prod Assy Word 2	**27** StrtrDN FltValue	**35** OutA DN FltState		**53** Drvin DNFltState
7 Starter Command	**16** Prod Assy Word 3	**28** StrtrDN IdlState	**36** OutA DN FltValue		**54** Drvin DNFltValue
8 Network Override	**17** Consumed IO Size	**29** StrtrDN IdlValue	**37** OutA DN IdlState		**55** High Speed Enable
9 Comm Override	**18** Produced IO Size	**61** LAST Pr Fault	**38** OutA DN IdlValue		
	19 Starter COS Mask	**62** Warning Status	**39** OutB Pr FltState		
	20 Net Out COS Mask		**40** OutB Pr FltValue		
	21 DNet Voltage		**41** OutB DN FltState		
			42 OutB DN FltValue		
			43 OutB DN IdlState		
			44 OutB DN IdlValue		
Display Group	**ZIP Parameters**	**Basic Setup**	**Advanced Setup**		
101 Output Freq	**67** AutoRun Zip	**131** Motor NP Volts	**151** Digital In1 Sel	**189** Current Limit 1	**227** Autotune
102 Commanded Freq	**68** Zone Produced EPR	**132** Motor NP Hertz	**152** Digital In2 Sel	**190** Motor OL Select	**228** IR Voltage Drop
103 Output Current	**69** Zone Produced PIT	**133** Motor OL Current	**153** Digital In3 Sel	**191** PWM Frequency	**229** Flux Current Ref
104 Output Voltage	**70** Zone #1 MacId	**134** Minimum Freq	**154** Digital In4 Sel	**192** Auto Rstrt Tries	**230** PID Trim Hi
105 DC Bus Voltage	**71** Zone #2 MacId	**135** Maximum Freq	**155** Relay Out Sel	**193** Auto Rstrt Delay	**231** PID Trim Lo
106 Drive Status	**72** Zone #3 MacId	**136** Start Source	**156** Relay Out Level	**194** Start At PowerUp	232 PID Ref Sel
107 Fault 1 Code	**73** Zone #4 MacId	**137** Stop Mode	**157** Relay Out LevelF	**195** Reverse Disable	**233** PID Feedback Sel
108 Fault 2 Code	**74** Zone #1 Health	**138** Speed Reference	**158** Opto Out1 Sel	**196** Flying Start En	**234** PID Prop Gain
109 Fault 3 Code	**75** Zone #2 Health	**139** Accel Time 1	**159** Opto Out1 Level	**197** Compensation	**235** PID Integ Time
110 Process Display	**76** Zone #3 Health	**140** Decel Time 1	**160** Opto Out1 LevelF	**198** SW Current Trip	**236** PID Diff Rate
112 Control Source	**77** Zone #4 Health	**141** Reset To Defalts	**161** Opto Out2 Sel	**199** Process Factor	**237** PID Setpoint
113 Contrl In Status	**78** Zone #1 Mask	**143** Motor OL Ret	**162** Opto Out2 Level	**200** Fault Clear	**238** PID Deadband
114 Dig In Status	**79** Zone #2 Mask		**163** DB Threshold	**201** Program Lock	**239** PID Preload
115 Comm Status	**80** Zone #3 Mask		**164** Opto Out Logic	**202** Testpoint Sel	**240** Stp Logic 0
116 Control SW Ver	**81** Zone #4 Mask		**165** Analog Out Sel	**203** Comm Data Rate	**241** Stp Logic 1
117 Drive Type	**82** Zone #1 Offset		**166** Analog Out High	**204** Comm Node Addr	**242** Stp Logic 2
118 Elapsed Run Time	**83** Zone #2 Offset		**167** Accel Time 2	**205** Comm Loss Action	**243** Stp Logic 3
119 Testpoint Data	**84** Zone #3 Offset		**168** Decel Time 2	**206** Comm Loss Time	**244** Stp Logic 4
120 Analog In 0…10V	**85** Zone #4 Offset		**169** Internal Freq	**207** Comm Format	**245** Stp Logic 5
121 Analog In 4…20 mA	**86** Zone #1 EPR		**170** Preset Freq 0	**208** Language	**246** Stp Logic 6
122 Output Power	**87** Zone #2 EPR		**171** Preset Freq 1	**209** Anlg Out Setpt	**247** Stp Logic 7
123 Output Power Fctr	**88** Zone #3 EPR		**172** Preset Freq 2	**210** Anlg In 0…10V Lo	**250** Stp Logic Time 0
124 Drive Temp	**89** Zone #4 EPR		**173** Preset Freq 3	**211** Anlg In 0…10V Hi	**251** Stp Logic Time 1
125 Counter Status	**90** Zone #1 Control		**174** Preset Freq 4	**212** Anlg In 4…20 mA Lo	**252** Stp Logic Time 2
126 Timer Status	**91** Zone #2 Control		**175** Preset Freq 5	**213** Anlg In4…20 mA Hi	**253** Stp Logic Time 3
127 Timer Stat Fract	**92** Zone #3 Control		**176** Preset Freq 6	**214** Slip Hertz @ FLA	**254** Stp Logic Time 4
128 Stp Logic Status	**93** Zone #4 Control		**177** Preset Freq 7	**215** Process Time Lo	**255** Stp Logic Time 5
129 Torque Current	**94** Zone #1 Key		**178** Jog Frequency	**216** Process Time Hi	**256** Stp Logic Time 6
	95 Zone #2 Key		**179** Jog Accel/Decel	**217** Bus Reg Mode	**257** Stp Logic Time 7
	96 Zone #3 Key		**180** DC Brake Time	**218** Current Limit 2	**260** EM Brk Off Delay
	97 Zone #4 Key		**181** DC Brake Level	**219** Skip Frequency	**261** EM Brk On Delay
	98 Device Value Key		**182** DB Resistor Sel	**220** Skip Freq Band	**262** MOP Reset Sel
	99 Zone Ctrl Enable		**183** S Curve %	**221** Stall Fault Time	
			184 Boost Select	**222** Analog In Loss	
			185 Start Boost	**223** 10V Bipolar Enbl	
			186 Break Voltage	**224** Var PWM Disable	
			187 Break Frequency	**225** Torque Perf Mode	
			188 Maximum Voltage	**226** Motor NP FLA	

DeviceLogix Group

Hdw Inputs	Parameter Number	1
This parameter provides status of hardware inputs.	Access Rule	GET
	Data Type	WORD
	Group	DeviceLogix
	Units	—
	Minimum Value	0
	Maximum Value	15
	Default Value	0

Bit				**Function**
3	**2**	**1**	**0**	
—	—	—	X	Input 0
—	—	X	—	Input 1
—	X	—	—	Input 2
X	—	—	—	Input 3

Network Inputs	Parameter Number	2
This parameter provides status of network inputs.	Access Rule	GET
	Data Type	WORD
	Group	DeviceLogix
	Units	—
	Minimum Value	0
	Maximum Value	65535
	Default Value	0

Bit																**Function**
15	**14**	**13**	**12**	**11**	**10**	**9**	**8**	**7**	**6**	**5**	**4**	**3**	**2**	**1**	**0**	
—	—	—	—	—	—	—	—	—	—	—	—	—	—	—	X	Net Input 0
—	—	—	—	—	—	—	—	—	—	—	—	—	—	X	—	Net Input 1
—	—	—	—	—	—	—	—	—	—	—	—	—	X	—	—	Net input 2
—	—	—	—	—	—	—	—	—	—	—	—	X	—	—	—	Net Input 3
—	—	—	—	—	—	—	—	—	—	—	X	—	—	—	—	Net Input 4
—	—	—	—	—	—	—	—	—	—	X	—	—	—	—	—	Net Input 5
—	—	—	—	—	—	—	—	—	X	—	—	—	—	—	—	Net Input 6
—	—	—	—	—	—	—	—	X	—	—	—	—	—	—	—	Net Input 7
—	—	—	—	—	—	—	X	—	—	—	—	—	—	—	—	Net Input 8
—	—	—	—	—	—	X	—	—	—	—	—	—	—	—	—	Net Input 9
—	—	—	—	—	X	—	—	—	—	—	—	—	—	—	—	Net Input 10
—	—	—	—	X	—	—	—	—	—	—	—	—	—	—	—	Net Input 11
—	—	—	X	—	—	—	—	—	—	—	—	—	—	—	—	Net Input 12
—	—	X	—	—	—	—	—	—	—	—	—	—	—	—	—	Net Input 13
—	X	—	—	—	—	—	—	—	—	—	—	—	—	—	—	Net Input 14
X	—	—	—	—	—	—	—	—	—	—	—	—	—	—	—	Net Input 15

Network Outputs	Parameter Number	3
This parameter provides status of network outputs.	Access Rule	GET
	Data Type	WORD
	Group	DeviceLogix
	Units	—
	Minimum Value	0
	Maximum Value	32767
	Default Value	0

Bit															**Function**
14	**13**	**12**	**11**	**10**	**9**	**8**	**7**	**6**	**5**	**4**	**3**	**2**	**1**	**0**	
—	—	—	—	—	—	—	—	—	—	—	—	—	—	X	Net Output 0
—	—	—	—	—	—	—	—	—	—	—	—	—	X	—	Net Output 1
—	—	—	—	—	—	—	—	—	—	—	—	X	—	—	Net Output 2
—	—	—	—	—	—	—	—	—	—	—	X	—	—	—	Net Output 3
—	—	—	—	—	—	—	—	—	—	X	—	—	—	—	Net Output 4
—	—	—	—	—	—	—	—	—	X	—	—	—	—	—	Net Output 5
—	—	—	—	—	—	—	—	X	—	—	—	—	—	—	Net Output 6
—	—	—	—	—	—	—	X	—	—	—	—	—	—	—	Net Output 7
—	—	—	—	—	—	X	—	—	—	—	—	—	—	—	Net Output 8
—	—	—	—	—	X	—	—	—	—	—	—	—	—	—	Net Output 9
—	—	—	—	X	—	—	—	—	—	—	—	—	—	—	Net Output 10
—	—	—	X	—	—	—	—	—	—	—	—	—	—	—	Net Output 11
—	—	X	—	—	—	—	—	—	—	—	—	—	—	—	Net Output 12
—	X	—	—	—	—	—	—	—	—	—	—	—	—	—	Net Output 13
X	—	—	—	—	—	—	—	—	—	—	—	—	—	—	Net Output 14

Trip Status	Parameter Number	4
This parameter provides trip identification.	Access Rule	GET
	Data Type	WORD
	Group	DeviceLogix
	Units	—
	Minimum Value	0
	Maximum Value	65535
	Default Value	0

Bit																**Function**
15	**14**	**13**	**12**	**11**	**10**	**9**	**8**	**7**	**6**	**5**	**4**	**3**	**2**	**1**	**0**	
—	—	—	—	—	—	—	—	—	—	—	—	—	—	—	X	Short Circuit
—	—	—	—	—	—	—	—	—	—	—	—	—	—	X	—	Overload
—	—	—	—	—	—	—	—	—	—	—	—	—	X	—	—	Phase Short
—	—	—	—	—	—	—	—	—	—	—	—	X	—	—	—	Ground Fault
—	—	—	—	—	—	—	—	—	—	—	X	—	—	—	—	Stall
—	—	—	—	—	—	—	—	—	—	X	—	—	—	—	—	Control Power
—	—	—	—	—	—	—	—	—	X	—	—	—	—	—	—	IO Fault
—	—	—	—	—	—	—		X	—	—	—	—	—	—	—	Overtemperature
—	—	—	—	—	—	—	X	—	—	—	—	—	—	—	—	Over Current
—	—	—	—	—	—	X	—	—	—	—	—	—	—	—	—	Dnet Power Loss
—	—	—	—	—	X	—	—	—	—	—	—	—	—	—	—	Internal Comm ❶ ❷
—	—	—	—	X	—	—	—	—	—	—	—	—	—	—	—	DC Bus Fault
—	—	—	X	—	—	—	—	—	—	—	—	—	—	—	—	EEprom
—	—	X	—	—	—	—	—	—	—	—	—	—	—	—	—	HW Fault ❷
—	X	—	—	—	—	—	—	—	—	—	—	—	—	—	—	Restart Retries
X	—	—	—	—	—	—	—	—	—	—	—	—	—	—	—	Misc. Fault ❷ ❸

❶ Indicates DB1 Comm Fault for Bulletin 284.
❷ Check Last Protection fault for details, Parameter 61.
❸ Indicates DB1 Brake Fault for Bulletin 284.

Starter Status	Parameter Number	5
This parameter provides the status of the starter.	Access Rule	GET
	Data Type	WORD
	Group	DeviceLogix
	Units	—
	Minimum Value	0
	Maximum Value	65535
	Default Value	0

Bit																**Function**
15	**14**	**13**	**12**	**11**	**10**	**9**	**8**	**7**	**6**	**5**	**4**	**3**	**2**	**1**	**0**	
—	—	—	—	—	—	—	—	—	—	—	—	—	—	—	X	Tripped
—	—	—	—	—	—	—	—	—	—	—	—	—	—	X	—	Warning
—	—	—	—	—	—	—	—	—	—	—	—	—	X	—	—	Running Fwd
—	—	—	—	—	—	—	—	—	—	—	—	X	—	—	—	Running Rev
—	—	—	—	—	—	—	—	—	—	—	X	—	—	—	—	Ready
—	—	—	—	—	—	—	—	—	—	X	—	—	—	—	—	Net Ctl Status
—	—	—	—	—	—	—	—	—	X	—	—	—	—	—	—	Net Ref Status
—	—	—	—	—	—	—	—	X	—	—	—	—	—	—	—	At Reference
—	—	—	—	—	—	—	X	—	—	—	—	—	—	—	—	DrvOpto1
—	—	—	—	—	—	X	—	—	—	—	—	—	—	—	—	DrvOpto2
—	—	—	—	—	X	—	—	—	—	—	—	—	—	—	—	Keypad Jog
—	—	—	—	X	—	—	—	—	—	—	—	—	—	—	—	Keypad Hand
—	—	—	X	—	—	—	—	—	—	—	—	—	—	—	—	HOA Status
—	—	X	—	—	—	—	—	—	—	—	—	—	—	—	—	140M On
—	X	—	—	—	—	—	—	—	—	—	—	—	—	—	—	Contactor 1 ❶
X	—	—	—	—	—	—	—	—	—	—	—	—	—	—	—	Contactor 2 ❷

❶ Refers to Source Brake contactor status.
❷ Refers to Output contactor status.

Dnet Status	Parameter Number	6
This parameter provides status of the DeviceNet connection.	Access Rule	GET
	Data Type	WORD
	Group	DeviceLogix
	Units	—
	Minimum Value	0
	Maximum Value	31
	Default Value	0

Bit																**Function**
15	**14**	**13**	**12**	**11**	**10**	**9**	**8**	**7**	**6**	**5**	**4**	**3**	**2**	**1**	**0**	
—	—	—	—	—	—	—	—	—	—	—	—	—	—	—	X	Exp Cnxn
—	—	—	—	—	—	—	—	—	—	—	—	—	—	X	—	IO Cnxn
—	—	—	—	—	—	—	—	—	—	—	—	—	X	—	—	Exp Flt
—	—	—	—	—	—	—	—	—	—	—	—	X	—	—	—	IO Flt
—	—	—	—	—	—	—	—	—	—	—	X	—	—	—	—	IO Idle
—	—	—	—	—	—	—	—	X	X	X	—	—	—	—	—	Reserved
—	—	—	—	—	—	—	X	—	—	—	—	—	—	—	—	ZIP 1 Cnxn
—	—	—	—	—	—	X	—	—	—	—	—	—	—	—	—	ZIP 1 Flt
—	—	—	—	—	X	—	—	—	—	—	—	—	—	—	—	ZIP 2 Cnxn
—	—	—	—	X	—	—	—	—	—	—	—	—	—	—	—	ZIP 2 Flt
—	—	—	X	—	—	—	—	—	—	—	—	—	—	—	—	ZIP 3 Cnxn
—	—	X	—	—	—	—	—	—	—	—	—	—	—	—	—	ZIP 3 Flt
—	X	—	—	—	—	—	—	—	—	—	—	—	—	—	—	ZIP 4 Cnxn
X	—	—	—	—	—	—	—	—	—	—	—	—	—	—	—	ZIP 4 Flt

Starter Command	Parameter Number	7
This parameter provides the command the starter.	Access Rule	GET/SET
	Data Type	WORD
	Group	DeviceLogix
	Units	—
	Minimum Value	0
	Maximum Value	255
	Default Value	0

Bit								**Function**
7	**6**	**5**	**4**	**3**	**2**	**1**	**0**	
—	—	—	—	—	—	—	X	Run Fwd
—	—	—	—	—	—	X	—	Run Rev
—	—	—	—	—	X	—	—	Fault Reset
—	—	—	—	X	—	—	—	Jog Fwd
—	—	—	X	—	—	—	—	Jog Rev
—	—	X	—	—	—	—	—	Reserved
—	X	—	—	—	—	—	—	User Out A
X	—	—	—	—	—	—	—	User Out B

Network Override	Parameter Number	8
This parameter allows for the local logic to override a Network fault. 0 = Disable 1 = Enable	Access Rule	GET/SET
	Data Type	BOOL
	Group	DeviceLogix
	Units	—
	Minimum Value	0
	Maximum Value	1
	Default Value	0

Comm Override	Parameter Number	9
This parameter allows for local logic to override a loss of an I/O connection. 0 = Disable 1 = Enable	Access Rule	GET/SET
	Data Type	BOOL
	Group	DeviceLogix
	Units	—
	Minimum Value	0
	Maximum Value	1
	Default Value	0

DeviceNet Group

Autobaud Enable	Parameter Number	10
When this parameter is enabled, the device attempts to determine the network baud rate and set its baud rate to the same, provided network traffic exists. At least one node with an established baud rate must exist on the network for autobaud to occur. 0 = Disable 1 = Enable	Access Rule	GET/SET
	Data Type	BOOL
	Group	DeviceNet
	Units	—
	Minimum Value	0
	Maximum Value	1
	Default Value	1

Consumed I/O Assy	Parameter Number	11
This parameter selects the format of the I/O data consumed	Access Rule	GET/SET
	Data Type	USINT
	Group	DeviceNet
	Units	—
	Minimum Value	0
	Maximum Value	188
	Default Value	164

Produced I/O Assy	Parameter Number	12
This parameter selects the format of the I/O data produced.	Access Rule	GET/SET
	Data Type	USINT
	Group	DeviceNet
	Units	—
	Minimum Value	0
	Maximum Value	190
	Default Value	165

Prod Assy Word 0 This parameter is used to build bytes 0-1 for produced assembly 120.	Parameter Number	13
	Access Rule	GET/SET
	Data Type	USINT
	Group	DeviceNet
	Units	—
	Minimum Value	0
	Maximum Value	262
	Default Value	1

Produced Assy Word 1 This parameter is used to build bytes 2-3 for produced assembly 120	Parameter Number	14
	Access Rule	GET/SET
	Data Type	USINT
	Group	DeviceNet
	Units	—
	Minimum Value	0
	Maximum Value	262
	Default Value	4

Prod Assy Word 2 This parameter is used to build bytes 4-5 for produced assembly 120.	Parameter Number	15
	Access Rule	GET/SET
	Data Type	USINT
	Group	DeviceNet
	Units	—
	Minimum Value	0
	Maximum Value	262
	Default Value	5

Prod Assy Word 3 This parameter is used to build bytes 6-7 for produced assembly 120.	Parameter Number	16
	Access Rule	GET/SET
	Data Type	USINT
	Group	DeviceNet
	Units	—
	Minimum Value	0
	Maximum Value	262
	Default Value	6

Consumer I/O Size This parameter maps to the Scanner Tx Size.	Parameter Number	17
	Access Rule	GET
	Data Type	USINT
	Group	DeviceNet
	Units	—
	Minimum Value	0
	Maximum Value	8
	Default Value	4

Produced I/O Size	Parameter Number	18
This parameter maps to the Scanners Rx Size.	Access Rule	GET
	Data Type	USINT
	Group	DeviceNet
	Units	—
	Minimum Value	0
	Maximum Value	8
	Default Value	4

Starter COS Mask	Parameter Number	19
This parameter allows the installer to define the change-of-state conditions that results in a change-of-state message being produced.	Access Rule	GET/SET
	Data Type	WORD
	Group	DeviceNet
	Units	—
	Minimum Value	0
	Maximum Value	16383
	Default Value	16383

Bit														**Function**
13	**12**	**11**	**10**	**9**	**8**	**7**	**6**	**5**	**4**	**3**	**2**	**1**	**0**	
—	—	—	—	—	—	—	—	—	—	—	—	—	X	Tripped
—	—	—	—	—	—	—	—	—	—	—	—	X	—	Warning
—	—	—	—	—	—	—	—	—	—	—	X	—	—	Running Fwd
—	—	—	—	—	—	—	—	—	—	X	—	—	—	Running Rev
—	—	—	—	—	—	—	—	—	X	—	—	—	—	Ready
—	—	—	—	—	—	—	—	X	—	—	—	—	—	Net Ctl Status
—	—	—	—	—	—	—	X	—	—	—	—	—	—	Net Ref Status
—	—	—	—	—	—	X	—	—	—	—	—	—	—	At Reference
—	—	—	—	—	X	—	—	—	—	—	—	—	—	User Input 1
—	—	—	—	X	—	—	—	—	—	—	—	—	—	User Input 2
—	—	—	X	—	—	—	—	—	—	—	—	—	—	User Input 3
—	—	X	—	—	—	—	—	—	—	—	—	—	—	User Input 4
—	X	—	—	—	—	—	—	—	—	—	—	—	—	HOA Status
X	—	—	—	—	—	—	—	—	—	—	—	—	—	140M On

Net Out COS Mask	Parameter Number	20
This parameter sets the bit that triggers a COS message on the network output.	Access Rule	GET/SET
	Data Type	WORD
	Group	DeviceNet
	Units	—
	Minimum Value	0
	Maximum Value	32767
	Default Value	0

Bit															**Function**
14	**13**	**12**	**11**	**10**	**9**	**8**	**7**	**6**	**5**	**4**	**3**	**2**	**1**	**0**	
—	—	—	—	—	—	—	—	—	—	—	—	—	—	X	Net Output 0
—	—	—	—	—	—	—	—	—	—	—	—	—	X	—	Net Output 1
—	—	—	—	—	—	—	—	—	—	—	—	X	—	—	Net Output 2
—	—	—	—	—	—	—	—	—	—	—	X	—	—	—	Net Output 3
—	—	—	—	—	—	—	—	—	—	X	—	—	—	—	Net Output 4
—	—	—	—	—	—	—	—	—	X	—	—	—	—	—	Net Output 5
—	—	—	—	—	—	—	—	X	—	—	—	—	—	—	Net Output 6
—	—	—	—	—	—	—	X	—	—	—	—	—	—	—	Net Output 7
—	—	—	—	—	—	X	—	—	—	—	—	—	—	—	Net Output 8
—	—	—	—	—	X	—	—	—	—	—	—	—	—	—	Net Output 9
—	—	—	—	X	—	—	—	—	—	—	—	—	—	—	Net Output 10
—	—	—	X	—	—	—	—	—	—	—	—	—	—	—	Net Output 11
—	—	X	—	—	—	—	—	—	—	—	—	—	—	—	Net Output 12
—	X	—	—	—	—	—	—	—	—	—	—	—	—	—	Net Output 13
X	—	—	—	—	—	—	—	—	—	—	—	—	—	—	Net Output 14

Dnet Voltage	Parameter Number	21
This parameter provides the voltage measurement for the DeviceNet network.	Access Rule	GET
	Data Type	UINT
	Group	DeviceNet
	Units	V
	Minimum Value	0
	Maximum Value	6500
	Default Value	0

Starter Protection Group

Breaker Type	Parameter Number	22
	Access Rule	GET
This parameter identifies the Bulletin 140M used in this product. 0 = 140M-D8N-C10 1 = 140M-D8N-C25	Data Type	BOOL
	Group	Starter Protection
	Units	—
	Minimum Value	0
	Maximum Value	1
	Default Value	—

PrFlt Reset Mode	Parameter Number	23
	Access Rule	GET/SET
This parameter is the Protection Fault reset mode. 0 = Manual 1 = Automatic	Data Type	BOOL
	Group	Starter Protection
	Units	—
	Minimum Value	0
	Maximum Value	1
	Default Value	0

Pr Fault Enable	Parameter Number	24 ❶
	Access Rule	GET/SET
This parameter enables the Protection Fault by setting the bit to 1.	Data Type	WORD
	Group	Starter Protection
	Units	—
	Minimum Value	0
	Maximum Value	65535
	Default Value	64927

Bit																**Function**
15	**14**	**13**	**12**	**11**	**10**	**9**	**8**	**7**	**6**	**5**	**4**	**3**	**2**	**1**	**0**	
—	—	—	—	—	—	—	—	—	—	—	—	—	—	—	X	Short Circuit ❶
—	—	—	—	—	—	—	—	—	—	—	—	—	—	X	—	Overload ❶
—	—	—	—	—	—	—	—	—	—	—	—	—	X	—	—	Phase Short ❶
—	—	—	—	—	—	—	—	—	—	—	—	X	—	—	—	Ground Fault ❶
—	—	—	—	—	—	—	—	—	—	—	X	—	—	—	—	Stall ❶
—	—	—	—	—	—	—	—	—	—	X	—	—	—	—	—	Control Power
—	—	—	—	—	—	—	—	—	X	—	—	—	—	—	—	IO Fault
—	—	—	—	—	—	—	—	X	—	—	—	—	—	—	—	Overtemperature ❶
—	—	—	—	—	—	—	X	—	—	—	—	—	—	—	—	Over Current ❶
—	—	—	—	—	—	X	—	—	—	—	—	—	—	—	—	Dnet Power Loss
—	—	—	—	—	X	—	—	—	—	—	—	—	—	—	—	Internal Comm ❶
—	—	—	—	X	—	—	—	—	—	—	—	—	—	—	—	DC Bus Fault ❶
—	—	—	X	—	—	—	—	—	—	—	—	—	—	—	—	EEprom ❶
—	—	X	—	—	—	—	—	—	—	—	—	—	—	—	—	HW Fault ❶
—	X	—	—	—	—	—	—	—	—	—	—	—	—	—	—	Restart Retries ❶
X	—	—	—	—	—	—	—	—	—	—	—	—	—	—	—	Misc. Fault ❶

❶ Cannot be disabled.

Pr Fault Reset This parameter resets the Protection Fault on a transition 0 > 1.	Parameter Number	25
	Access Rule	GET/SET
	Data Type	BOOL
	Group	Starter Protection
	Units	—
	Minimum Value	0
	Maximum Value	1
	Default Value	0

StrtrDN FltState This parameter with Parameter 27 defines how the starter responds when a DeviceNet fault occurs. When set to 1, hold to last state occurs. When set to 0, goes to DnFlt Value on DN faults as determined by Parameter 27.	Parameter Number	26
	Access Rule	GET/SET
	Data Type	BOOL
	Group	Starter Protection
	Units	—
	Minimum Value	0
	Maximum Value	1
	Default Value	0

StrtrDN FltValue This parameter determines if the starter is commanded in the event of a DevceNet fault. 0 = OFF 1 = ON	Parameter Number	27
	Access Rule	GET/SET
	Data Type	BOOL
	Group	Starter Protection
	Units	—
	Minimum Value	0
	Maximum Value	1
	Default Value	0

StrtrDN IdlState This parameter with Parameter 29 defines how the starter responds when a DeviceNet network is idle. When set to 1, hold to last state occurs. When set to 0, goes to DnFlt Value on DN faults as determined by Parameter 29. 0 = Go to Idle Value 1 = Hold Last State	Parameter Number	28
	Access Rule	GET/SET
	Data Type	BOOL
	Group	Starter Protection
	Units	—
	Minimum Value	0
	Maximum Value	1
	Default Value	0

StrtrDN IdlValue This parameter determines the state that starter assumes when the network is idle and Parameter 28 is set to 0. 0 = OFF 1 = ON	Parameter Number	29
	Access Rule	GET/SET
	Data Type	BOOL
	Group	Starter Protection
	Units	—
	Minimum Value	0
	Maximum Value	1
	Default Value	0

Last PR Fault 1 =Hdw Short Ckt 2 = Reserved 3 =Motor Overload (PF Fault Code 7) 4 =Drive Overload (PF Fault Code 64) 5 = Phase U to Gnd (PF Fault Code 38) 6 = Phase V to Gnd (PF Fault Code 39) 7 = Phase W to Gnd (PF Fault Code 40) 8 = Phase UV Short (PF4 Fault Code 41) 9 = Phase UW Short (PF Fault Code 42) 10 = Phase VW Short (PF Fault Code 43) 11 = Ground Fault (PF Fault Code 13) 12 = Stall (PF Fault Code 6) 13 = Control Pwr Loss 14 = Control Pwr Fuse 15 = Input Short 16 = Output Fuse 17 = Over Temp 18 = Heatsink OvrTmp (PF Fault Code 8) 19 = HW OverCurrent (PF Fault Code 12) 20 = SW OverCurrent (PF Fault Code 63) 21 = DNet Power Loss 22 = Internal Comm 23 = Drive Comm Loss (PF Fault Code 81) 24 = Power Loss (PF Fault Code 3) 25 = Under Voltage (PF Fault Code 4) 26 = Over Voltage (PF Fault Code 5) 27 = MCB EEPROM 28 = Base EEPROM 29 =Drive EEPROM (PF Fault Code 100) 30 = Wrong Base 31 = Fan RPM below minimum 32 = Power Unit (PF Fault Code 70) 33 = Drive IO Brd (PF Fault Code122) 34 = Restart Retries (PF Fault Code 33) 35 = Drive Aux In Flt (PF Fault Code 2) 36 = Analog Input (PF Fault Code 29) 37 = Drv Param Reset (PF Fault Code 48) 38 = SCV Autotune (PF Fault Code 80) 39 = Source Brake 40 = Reserved 41 = DB1 Comm 42 = DB1 Fault 43 = DB Switch Short 45 = Incompatible Drive Firmware	Parameter Number	61
	Access Rule	GET
	Data Type	UINT
	Group	Starter Protection
	Units	—
	Minimum Value	0
	Maximum Value	45
	Default Value	0

Warning Status	Parameter Number	62
This parameter warns the user of a condition, without faulting	Access Rule	GET
	Data Type	WORD
	Group	Starter Protection
	Units	—
	Minimum Value	0
	Maximum Value	65535
	Default Value	0

Bit																**Warning**
15	**14**	**13**	**12**	**11**	**10**	**9**	**8**	**7**	**6**	**5**	**4**	**3**	**2**	**1**	**0**	
—	—	—	—	—	—	—	—	—	—	—	—	—	—	—	X	Reserved
—	—	—	—	—	—	—	—	—	—	—	—	—	—	X	—	Reserved
—	—	—	—	—	—	—	—	—	—	—	—	—	X	—	—	Reserved
—	—	—	—	—	—	—	—	—	—	—	—	X	—	—	—	Reserved
—	—	—	—	—	—	—	—	—	—	—	X	—	—	—	—	Reserved
—	—	—	—	—	—	—	—	—	—	X	—	—	—	—	—	Control Power
—	—	—	—	—	—	—	—	—	X	—	—	—	—	—	—	IO Warning
—	—	—	—	—	—	—	—	X	—	—	—	—	—	—	—	Reserved
—	—	—	—	—	—	—	X	—	—	—	—	—	—	—	—	Phase Imbalance
—	—	—	—	—	—	X	—	—	—	—	—	—	—	—	—	DeviceNet
—	—	—	—	—	X	—	—	—	—	—	—	—	—	—	—	Reserved
—	—	—	—	X	—	—	—	—	—	—	—	—	—	—	—	Reserved
—	—	—	X	—	—	—	—	—	—	—	—	—	—	—	—	Reserved
—	—	X	—	—	—	—	—	—	—	—	—	—	—	—	—	Hardware
—	X	—	—	—	—	—	—	—	—	—	—	—	—	—	—	Reserved
X	—	—	—	—	—	—	—	—	—	—	—	—	—	—	—	Miscellaneous ❶

❶ When a Dynamic Brake Thermal Warning is detected, a Miscellaneous Warning (bit 15) is reported in the Warning Status parameter.

User I/O Group

Off-to-On Delay This parameter allows the installer to program a time duration before being reported ON.	Parameter Number	30
	Access Rule	GET/SET
	Data Type	UINT
	Group	User I/O
	Units	ms
	Minimum Value	0
	Maximum Value	65.000
	Default Value	0

On-to-Off Delay This parameter allows the installer to program a time duration before being reported OFF.	Parameter Number	31
	Access Rule	GET/SET
	Data Type	UINT
	Group	User I/O
	Units	ms
	Minimum Value	0
	Maximum Value	65.000
	Default Value	0

In Sink/Source This parameter allows the installer to program the inputs to be sink or source. 0 = Sink 1 = Source	Parameter Number	32
	Access Rule	GET/SET
	Data Type	BOOL
	Group	User I/O
	Units	—
	Minimum Value	0
	Maximum Value	1
	Default Value	0

OutA Pr FltState This parameter with Parameter 34 defines how Output A responds when a trip. When set to 1, Output A continue to operate as command via the network. When set to 0, Output A opens or closes as determined by setting in Parameter 34.	Parameter Number	33
	Access Rule	GET/SET
	Data Type	BOOL
	Group	User I/O
	Units	—
	Minimum Value	0
	Maximum Value	1
	Default Value	0

OutA Pr FltValue This parameter determines the state the Out A assumes when a trip occurs and Parameter 33 is set to 0. 0 = Open 1 = Close	Parameter Number	34
	Access Rule	GET/SET
	Data Type	BOOL
	Group	User I/O
	Units	—
	Minimum Value	0
	Maximum Value	1
	Default Value	0

OutA DN FltState	Parameter Number	35
This parameter with Parameter 36 defines how Output A responds when a DeviceNet network fault occurs. When set to 1, Output A holds state before trip occurrence. When set to 0, Output A opens or closes as determined by setting in Parameter 36.	Access Rule	GET/SET
	Data Type	BOOL
	Group	User I/O
	Units	—
	Minimum Value	0
	Maximum Value	1
	Default Value	0

OutA DN FltValue	Parameter Number	36
This parameter determines the state that Output A assumes when a DeviceNet network fault occurs and Parameter 35 is set to 0. 0 = Open 1 = Close	Access Rule	GET/SET
	Data Type	BOOL
	Group	User I/O
	Units	—
	Minimum Value	0
	Maximum Value	1
	Default Value	0

OutA DN IdlState	Parameter Number	37
This parameter with Parameter 38 defines how Output A responds when the DeviceNet network is idle. When set to 0, Output A opens or closes as determined by the setting in Parameter 38. The DN Flt parameters supersede the Dn Idl parameters.	Access Rule	GET/SET
	Data Type	BOOL
	Group	User I/O
	Units	—
	Minimum Value	0
	Maximum Value	1
	Default Value	0

OutA DN IdlValue	Parameter Number	38
This parameter determines the state that Output A assumes when the network is idle and Parameter 37 is set to 0. 0 = Open 1 = Closed	Access Rule	GET/SET
	Data Type	BOOL
	Group	User I/O
	Units	—
	Minimum Value	0
	Maximum Value	1
	Default Value	0

OutB Pr FltState	Parameter Number	39
This parameter with Parameter 40 defines how Output B responds when a trip. When set to 1, Output B continue to operate as command via the network. When set to 0, Output B opens or closes as determined by setting in Parameter 40.	Access Rule	GET/SET
	Data Type	BOOL
	Group	User I/O
	Units	—
	Minimum Value	0
	Maximum Value	1
	Default Value	0

OutB Pr FltValue	Parameter Number	40
This parameter determines the state the Out B assumes when a trip occurs and Parameter 39 is set to 0. 0 = Open 1 = Close	Access Rule	GET/SET
	Data Type	BOOL
	Group	User I/O
	Units	—
	Minimum Value	0
	Maximum Value	1
	Default Value	0

OutB DN FltState	Parameter Number	41
This parameter with Parameter 42 defines how Output B responds when a DeviceNet network fault occurs. When set to 1, Output B holds state before trip occurrence. When set to 0, Output B opens or closes as determined by setting in Parameter 42.	Access Rule	GET/SET
	Data Type	BOOL
	Group	User I/O
	Units	—
	Minimum Value	0
	Maximum Value	1
	Default Value	0

OutB DN FltValue	Parameter Number	42
This parameter determines the state that Output B assumes when a DeviceNet network fault occurs and Parameter 41 is set to 0. 0 = Open 1 = Close	Access Rule	GET/SET
	Data Type	BOOL
	Group	User I/O
	Units	—
	Minimum Value	0
	Maximum Value	1
	Default Value	0

OutB DN IdlState	Parameter Number	43
This parameter with Parameter 44 defines how Output B responds when the DeviceNet network is idle. When set to 0, Output B opens or closes as determined by the setting in Parameter 44. The DN Flt parameters supersede the Dn Idl parameters.	Access Rule	GET/SET
	Data Type	BOOL
	Group	User I/O
	Units	—
	Minimum Value	0
	Maximum Value	1
	Default Value	0

OutB DN IdlValue	Parameter Number	44
This parameter determines the state that Output B assumes when the network is idle and Parameter 43 is set to 0. 0 = Open 1 = Close	Access Rule	GET/SET
	Data Type	BOOL
	Group	User I/O
	Units	—
	Minimum Value	0
	Maximum Value	1
	Default Value	0

Miscellaneous Group

Keypad Mode	Parameter Number	45
This parameter selects if the keypad operation is maintained or momentary. 0 = Maintained 1 = Momentary	Access Rule	GET/SET
	Data Type	BOOL
	Group	Misc.
	Units	—
	Minimum Value	0
	Maximum Value	1
	Default Value	0

Keypad Disable	Parameter Number	46
This parameter disables all keypad function except for the OFF and RESET buttons. 0 = Not Disabled 1 = Disabled	Access Rule	GET/SET
	Data Type	BOOL
	Group	Misc.
	Units	—
	Minimum Value	0
	Maximum Value	1
	Default Value	0

Set to Defaults	Parameter Number	47
This parameter if set to 1 sets the device to the factory defaults. 0 = No Operation 1 = Set to Defaults	Access Rule	GET/SET
	Data Type	BOOL
	Group	Misc.
	Units	—
	Minimum Value	0
	Maximum Value	1
	Default Value	0

Base Enclosure	Parameter Number	56
Indicates the ArmorStart Base unit enclosure rating 0 = IP67 1 = NEMA 4X 2-15 = Reserved	Access Rule	GET
	Data Type	WORD
	Group	Misc.
	Units	—
	Minimum Value	0
	Maximum Value	—
	Default Value	0

Base Options	Parameter Number	57
Indicates the options for the ArmorStart Base unit Bit 0 = Output Fuse Bit 1 = Safety Monitor Bit 2 = CP Fuse Detect Bits 3-7 = Reserved Bit 8 = 10A Base Bit 9 = 25A Base Bit 10-15 = Reserved	Access Rule	GET
	Data Type	WORD
	Group	Misc.
	Units	—
	Minimum Value	0
	Maximum Value	—
	Default Value	0

Wiring Options	Parameter Number	58
	Access Rule	GET
Bit 0 = Conduit Bit 1 = Round Media Bits 2-15 = Reserved	Data Type	WORD
	Group	Misc.
	Units	—
	Minimum Value	0
	Maximum Value	—
	Default Value	0

Starter Enclosure	Parameter Number	59
	Access Rule	GET
Bit 0 = IP67 Bit 1 = NEMA 4X Bits 2-15 reserved	Data Type	WORD
	Group	Misc.
	Units	—
	Minimum Value	0
	Maximum Value	—
	Default Value	0

Starter Option	Parameter Number	60
	Access Rule	GET
Bit 0 = HOA Keypad Bit 1 = Safety Monitor Bit 2 = Source Brake Bit 3 = Control Brake Bit 4 = Dynamic Brake Bit 5 = Output Contactor Bit 6 = EMI Filter Bit 7 = 0-10V Analog In Bits 8-15 = Reserved	Data Type	WORD
	Group	Misc.
	Units	—
	Minimum Value	0
	Maximum Value	66535
	Default Value	0

Drive DeviceNet Group

Drive Control	Parameter Number	48
This parameter provides the status of drive parameters.	Access Rule	GET
	Data Type	WORD
	Group	Drive DeviceNet
	Units	—
	Minimum Value	0
	Maximum Value	4095
	Default Value	0

Bit												**Function**
11	**10**	**9**	**8**	**7**	**6**	**5**	**4**	**3**	**2**	**1**	**0**	
—	—	—	—	—	—	—	—	—	—	—	X	Accel 1 En
—	—	—	—	—	—	—	—	—	—	X	—	Accel 2 En
—	—	—	—	—	—	—	—	—	X	—	—	Decel 1 En
—	—	—	—	—	—	—	—	X	—	—	—	Decel 3 En
—	—	—	—	—	—	—	X	—	—	—	—	Freq Sel 0
—	—	—	—	—	—	X	—	—	—	—	—	Freq Sel 1
—	—	—	—	—	X	—	—	—	—	—	—	Freq Sel 2
—	—	—	—	X	—	—	—	—	—	—	—	Reserved
—	—	—	X	—	—	—	—	—	—	—	—	Drv In 1
—	—	X	—	—	—	—	—	—	—	—	—	Drv In 2
—	X	—	—	—	—	—	—	—	—	—	—	Drv In 3
X	—	—	—	—	—	—	—	—	—	—	—	Drv In 4

Drvin PrFltState	Parameter Number	49
This parameter, with Parameter 50, defines how the Drive Digital Inputs 1…4 responds when a protection trip occurs. When set to 1, Drive Digital Inputs 1…4 continue to operate as command via the network. When set to 0, Drive Digital Inputs 1…4 opens or closes as determined by setting in Parameter 50. 0 = Go to PrFlt Value 1 = Ignore PrFlt	Access Rule	GET/SET
	Data Type	BOOL
	Group	Drive DeviceNet
	Units	—
	Minimum Value	0
	Maximum Value	1
	Default Value	0

Drvin PrFltValue	Parameter Number	50
This parameter determines the state of Drive Digital Inputs 1…4, assumes when a trip occurs and Parameter 49 is set to 0. 0 = Open 1 = Close	Access Rule	GET/SET
	Data Type	BOOL
	Group	Drive DeviceNet
	Units	—
	Minimum Value	0
	Maximum Value	1
	Default Value	0

Drvin DNFltState	Parameter Number	51
This parameter, with Parameter 52, defines how the Drive Digital Inputs 1…4 responds when a DeviceNet fault occurs. When set to 1, Drive Digital Inputs 1…4 hold to last state occurs. When set to 0, goes to DnFlt Value on DN faults as determined by Parameter 52. 0 = Go to Fault Value 1 = Hold Last State	Access Rule	GET/SET
	Data Type	BOOL
	Group	Drive DeviceNet
	Units	—
	Minimum Value	0
	Maximum Value	1
	Default Value	0

Drvin DNFlt Value	Parameter Number	52
This parameter determines the state of Drive Digital Inputs 1…4 when a DeviceNet Fault occurs and Parameter 51 is set to 0. 0 = OFF 1 = ON	Access Rule	GET/SET
	Data Type	BOOL
	Group	Drive DeviceNet
	Units	—
	Minimum Value	0
	Maximum Value	1
	Default Value	0

Drvin DNIdlState	Parameter Number	53
This parameter, with Parameter 54, defines how the Drive Digital Input 1…4 responds when a DeviceNet network is idle. When set to 1, hold to last state occurs. When set to 0, goes to DnFlt Value on DN faults as determined by Parameter 54. 0 = Go to Fault Value 1 = Hold Last State	Access Rule	GET/SET
	Data Type	BOOL
	Group	Drive DeviceNet
	Units	—
	Minimum Value	0
	Maximum Value	1
	Default Value	0

StrtrDN IdlValue	Parameter Number	54
This parameter determines the state that Drive Digital Inputs 1…4 assume when the network is idle and Parameter 53 is set to 0. 0 = OFF 1 = ON	Access Rule	GET/SET
	Data Type	BOOL
	Group	Drive DeviceNet
	Units	—
	Minimum Value	0
	Maximum Value	1
	Default Value	0

Display Group

Output Freq	Parameter Number	101
Output frequency present at T1, T2, T3.	Related Parameters	102, 110, 134, 135, 138
	Access Rule	GET
	Data Type	UINT
	Group	Display Group
	Units	0.1 Hz
	Minimum Value	0.0
	Maximum Value	400.0 Hz
	Default Value	Read Only

Commanded Freq Value of the active frequency command. Displays the commanded frequency even if the drive is not running.	Parameter Number	102
	Related Parameters	101, 113, 134, 135, 138
	Access Rule	GET
	Data Type	UINT
	Group	Display Group
	Units	0.1 Hz
	Minimum Value	0.0
	Maximum Value	400.0 Hz
	Default Value	Read Only

Output Current Output Current present at T1, T2, T3.	Parameter Number	103
	Access Rule	GET
	Data Type	UINT
	Group	Display Group
	Units	0.01
	Minimum Value	0.00
	Maximum Value	Drive rated amps x 2
	Default Value	Read Only

Output Voltage Output Current present at T1, T2, T3.	Parameter Number	104
	Related Parameters	131, 184, 188
	Access Rule	GET
	Data Type	UINT
	Group	Display Group
	Units	1V AC
	Minimum Value	0
	Maximum Value	230V, 460V, or 600V AC
	Default Value	Read Only

DC Bus Voltage Present DC Bus voltage level.	Parameter Number	105
	Access Rule	GET
	Data Type	UINT
	Group	Display Group
	Units	1V DC
	Minimum Value	Based on Drive Rating
	Maximum Value	
	Default Value	Read Only

Drive Status Present operating condition of the drive. Bit 0 = running Bit 1 = Forward Bit 2 = Accelerating Bit 3 = Decelerating	Parameter Number	106
	Related Parameter	195
	Access Rule	GET
	Data Type	Byte
	Group	Display Group
	Units	—
	Minimum Value	0
	Maximum Value	1
	Default Value	Read Only

Fault 1 Code	Parameter Number	107
A code that represents drive fault. The code appears in this parameter as the most recent fault that has occurred.	Access Rule	GET
	Data Type	UINT
	Group	Display Group
	Units	—
	Minimum Value	F122
	Maximum Value	F2
	Default Value	Read Only

Fault 2 Code	Parameter Number	108
A code that represents a drive fault. The code appears in this parameter as the second most recent fault that has occurred.	Access Rule	GET
	Data Type	UINT
	Group	Display Group
	Units	—
	Minimum Value	F122
	Maximum Value	F2
	Default Value	Read Only

Fault 3 Code	Parameter Number	109
A code that represents a drive fault. The code appears in this parameter as the third most recent fault that has occurred.	Access Rule	GET
	Data Type	UINT
	Group	Display Group
	Units	—
	Minimum Value	F122
	Maximum Value	F2
	Default Value	Read Only

Process Display	Parameter Number	110
The output frequency that is scaled by the process factor (Parameter 199).	Related Parameter	101. 199
	Access Rule	GET
	Data Type	LINT
	Group	Display Group
	Units	0.01…1
	Minimum Value	0.00
	Maximum Value	9999
	Default Value	Read Only

Control Source	**Parameter Number**	112
Displays the source of the Start Command and Speed Reference. 1 = Internal Frequency 2 = 0…10V Input/Remote Potentiometer 4 = Preset Freq X 5 = Internal communication 9 = Jog Freq	Related Parameters	136, 138, 151…154 (Digital Inx Sel) must be set to 4, 169, 170…177 (Preset Freq X), 240…247 (StepLogic Control)
	Access Rule	GET
	Data Type	UINT
	Group	Display Group
	Units	1
	Minimum Value	0
	Maximum Value	9
	Default Value	5

Contrl In Status	Parameter Number	113
	Related Parameter	102, 134, 135
Status of the control terminal block control inputs: Bit 0 = Start/Run FWD input Bit 1 = Direction/Run REV Input Bit 2 = Stop Input Bit 3 = Dynamic Brake Transistor On	Access Rule	GET
	Data Type	UINT
	Group	Display Group
	Units	1
	Minimum Value	0
	Maximum Value	1
	Default Value	0

Dig In Status	Parameter Number	114
	Related Parameter	151…154
Status of the control terminal block digital inputs: Bit 0 = Digital IN 1 Sel Bit 1 = Digital IN 2 Sel Bit 2 = Digital IN 3 Sel Bit 3 = Digital IN 4 Sel	Access Rule	GET
	Data Type	UINT
	Group	Display Group
	Units	1
	Minimum Value	0
	Maximum Value	1
	Default Value	0

Comm Status	Parameter Number	115
	Related Parameter	203…207
Status of communications ports: Bit 0 = Receiving Data Bit 1 = Transmitting Data Bit 2 = Internal Communications Bit 3 = Communication Error	Access Rule	GET
	Data Type	UINT
	Group	Display Group
	Units	1
	Minimum Value	0
	Maximum Value	1
	Default Value	0

Elapsed Run Time	Parameter Number	118
	Access Rule	GET
Accumulated time drive is outputting power. Time is displayed in 10 hour increments.	Data Type	UINT
	Group	Display Group
	Units	1 = 10 hrs
	Minimum Value	0
	Maximum Value	9999
	Default Value	Read Only

Analog In 0…10V	Parameter Number	120
	Related Parameter	210, 211
The percent value of the voltage at I/O terminal 13 (100% = 10V).	Access Rule	GET
	Data Type	UINT
	Group	Display Group
	Units	0.1%
	Minimum Value	0.0%
	Maximum Value	100.0%
	Default Value	Read Only

Output Power The output power present at T1, T2, and T3.	Parameter Number	122
	Access Rule	GET
	Data Type	UINT
	Group	Display Group
	Units	
	Minimum Value	0.00
	Maximum Value	Drive rated power X 2
	Default Value	Read Only

Output Power Fctr The angle in electrical degrees between motor voltage and current.	Parameter Number	123
	Access Rule	GET
	Data Type	UINT
	Group	Display Group
	Units	0.1°
	Minimum Value	0.0°
	Maximum Value	180.0°
	Default Value	Read Only

Drive Temp Present operating temperature of the drive power section.	Parameter Number	124
	Access Rule	GET
	Data Type	UINT
	Group	Display Group
	Units	1°C
	Minimum Value	0
	Maximum Value	120
	Default Value	Read Only

Counter Status The current value of the counter when counter is enabled.	Parameter Number	125
	Access Rule	GET
	Data Type	UINT
	Group	Display Group
	Units	1
	Minimum Value	0
	Maximum Value	9999
	Default Value	Read Only

Timer Status The current value of the timer when timer is enabled.	Parameter Number	126
	Access Rule	GET
	Data Type	UINT
	Group	Display Group
	Units	0.1 sec
	Minimum Value	0
	Maximum Value	9999
	Default Value	Read Only

Torque Current The current value of the motor torque current.	Parameter Number	129
	Related Parameters	
	Access Rule	GET
	Data Type	UINT
	Group	Display Group
	Units	0.01
	Minimum Value	0.00
	Maximum Value	Drive Rated Amps x 2
	Default Value	Read Only

Basic Program Group

Motor NP Volts Stop drive before changing this parameter. Set to the motor name plate rated volts.	Parameter Number	131
	Related Parameters	104, 184, 185…187
	Access Rule	GET/SET
	Data Type	UINT
	Group	Basic Program
	Units	1V AC
	Minimum Value	20
	Maximum Value	240V, 460V, or 600V AC
	Default Value	Based on Drive Rating

Motor NP Hertz Set to the motor nameplate rated frequency. Stop drive before changing this parameter.	Parameter Number	132
	Related Parameters	184, 185…187, and 190
	Access Rule	GET/SET
	Data Type	UINT
	Group	Basic Program
	Units	1 Hz
	Minimum Value	15
	Maximum Value	400
	Default Value	60 Hz

Motor OL Current Set to the maximum allowable current. The drive fault on an F7 Motor Over load if the value of this parameter is exceeded by 150% for 60 seconds.	Parameter Number	133
	Related Parameter	155, 158, 161, 189, 190, 198, 214, 218
	Access Rule	GET/SET
	Data Type	UINT
	Group	Basic Program
	Units	0.1 A
	Minimum Value	0.0
	Maximum Value	Drive rated amps x 2
	Default Value	Based on Drive Rating

Minimum Freq	Parameter Number	134
Sets the lowest frequency that the drive outputs continuously.	Related Parameter	101, 102, 113, 135, 185, 186, 187, 210, 212
	Access Rule	GET/SET
	Data Type	UINT
	Group	Basic Program
	Units	0.1 Hz
	Minimum Value	0.0
	Maximum Value	400
	Default Value	0.0

Maximum Freq	Parameter Number	135
Stop drive before changing this parameter. Sets the Highest frequency that the drive outputs continuously.	Related Parameter	101, 102, 113, 134, 135, 178, 185, 186, 187, 211, 213
	Access Rule	GET/SET
	Data Type	UINT
	Group	Basic Program
	Units	0.1 Hz
	Minimum Value	0.0
	Maximum Value	400
	Default Value	60.0

Stop Mode	Parameter Number	137
Valid Stop Mode for the Bulletin 284 ArmorStart are the following: 0 = **Ramp, CF** Ramp to Stop. **Stop** command clears active fault. 1 = **Coast, CF** Coast to Stop. **Stop** command clears active fault. 2 = **DC Brake,CF** DC Injection Braking Stop. **Stop** command clears active fault. 3 = **DCBrkAuto, CF** DC injection Braking with Auto Shutoff. Standard DC Injection Braking for value set in Parameter 180 (DC Brake Time) or Drive shuts off if the drive detects that the motor is stopped. **Stop** command clears active fault 4 = **Ramp** Ramp to Stop 5 = **Coast** Coast to Stop 6 = **DC Brake** DC Injection Braking Stop 7 = **DC BrakeAuto** DC Injection Stop with Auto Shutoff. Standard DC Injection Braking for value set in Parameter 180 (DC Brake Time) or Drive shuts off if current limit is exceeded 8 = **Ramp** + **EM B, CF** Ramp to Stop with EM Brake Control. **Stop** command clears active fault. 9 = **Ramp** + **EM Brk** Ramp to Stop with EM Brake Control.	Related Parameters	136, 180, 181, 182, 205, 260, 261
	Access Rule	GET/SET
	Data Type	UINT
	Group	Basic Program
	Units	—
	Minimum Value	0
	Maximum Value	9
	Default Value	9

Speed Reference	Parameter Number	138
Valid Speed References for the Bulletin 284 ArmorStart are the following: 1 = Internal Freq 2 = 0…10V Input 4 = Preset Freq 5 = Comm port 9 = Jog Freq **Note:** Option 2 must be selected when using 0…10V Analog Input.	Related Parameters	101, 102, 112, 139, 140, 151, 152, 153, 154, 169, 170…173, 174…177, 210, 211, 213, 232, 240…247, and 250…257
	Access Rule	GET/SET
	Data Type	UINT
	Group	Basic Program
	Units	—
	Minimum Value	0
	Maximum Value	7
	Default Value	5

Accel Time 1	Parameter Number	139
Sets the rate of acceleration for all speed increases. $\frac{\text{Maximum Freq}}{\text{Accel Time}} = \text{Accel Rate}$	Related Parameters	138, 140, 151, 152, 153, 154, 167, 170…173, 174…177, and 240…247
	Access Rule	GET/SET
	Data Type	UINT
	Group	Basic Program
	Units	0.1 sec
	Minimum Value	0.0 sec
	Maximum Value	600.0 sec
	Default Value	10.0 sec

Decel Time 1	Parameter Number	140
Sets the rate of deceleration for all speed decreases. $\frac{\text{Maximum Freq}}{\text{Decel Time}} = \text{Decel Rate}$	Related Parameters	138, 139, 151, 152, 153, 154, 168, 170…173, 174…177, and 240…247
	Access Rule	GET/SET
	Data Type	UINT
	Group	Basic Program
	Units	0.1 sec
	Minimum Value	0.1 sec
	Maximum Value	600.0 sec
	Default Value	10.0 sec

Reset To Defaults	Parameter Number	141
Stop drive before changing this parameter.	Access Rule	GET/SET
Resets all parameter values to factory defaults.	Data Type	BOOL
0 = Ready/Idle (Default)	Group	Basic Program Group
1 = Factory Rset	Units	—
	Minimum Value	1
	Maximum Value	1
	Default Value	0

Motor OL Ret	Parameter Number	143
Enables/disables the Motor overload Retention function. When Enabled, the value that is held in the motor overload counter is saved at power-down and restored at power-up. A change to this parameter setting resets the counter.	Access Rule	GET/SET
0 = Disabled (Default)	Data Type	BOOL
1 = Enabled	Group	Basic Program Group
	Units	—
	Minimum Value	0
	Maximum Value	1
	Default Value	0

Advanced Program Group

151 (Digital In 1 SEL) **152 (Digital In 2 SEL)** **153 (Digital In 3 SEL)** **154 (Digital In 4 SEL)** Stop drive before changing this parameter. Selects the function for the digital inputs.	Parameter Number	151, 152, 153, 154
	Related Parameters	112, 114, 138…140, 167, 168, 170…173, 174…177, 178, 179, 240…247
	Access Rule	GET/SET
	Data Type	UINT
	Group	Advanced Program Group
	Units	See Table 14 - for details
	Minimum Value	
	Maximum Value	
	Default Value	

Table 14 - Digital Inputs Options

Options	Description	
1	Acc and Dec2	• When active, Parameter 167 (Accel Time 2) and Parameter 168 (Decel Time 2) are used for all ramp rates except Jog. • Can only be tied to one input.
2	Jog	• When input is present, drive accelerates according to the value set in Parameter 179 (Jog Accel/Decel) and ramps to the value set in Parameter 178 (Jog Frequency). • When the input is removed, drive ramps to a stop according to the value set in Parameter 179 (Jog Accel/Decel). • A valid **Start** command overrides this input.
4	**Preset Freq** (Parameters 151 and 152 Default)	See Parameters 170…173 and 174…177.
6	Comm Port	This option is the default setting.
7	Clear Fault	When active, clears active fault.
8	RampStop,CF	Causes drive to immediately ramp to stop regardless of how Parameter 137 (Stop Mode) is set.
9	CoastStop,CF	Causes drive to immediately ramp to stop regardless of how Parameter 137 (Stop Mode) is set.
10	DCInjStop,CF	Causes drive to immediately begin a DC Injection stop regardless of how Parameter 137 (Stop Mode) is set.
11	**Jog Forward** (Parameter 154 Default)	Drive accelerates to Parameter 178 (Jog Frequency) according to Parameter 179 (Jog Accel/Decel) and ramps to stop when input becomes inactive. A valid start overrides this command.
12	Jog Reverse	Drive accelerates to Parameter 178 (Jog Frequency) according to Parameter 179 (Jog Accel/Decel) and ramps to stop when input becomes inactive. A valid start overrides this command.
13	10V In Ctrl	Option with Factory Installed option — A10 (0…10V Analog Input). Selects 0…10V or +/-10V as the frequency reference. Start source is not changed.
16	MOP Up	Increases the value of Parameter 169 (internal Freq) at a rate 2 Hz per second. Default of Parameter 169 is 60 Hz.
17	MOP Down	Decreases the value of Parameter 169 (internal Freq) at a rate 2 Hz per second. Default of Parameter 169 is 60 Hz.
27	Em Brk Rls	If EM Brake function is enabled, this input releases the brake.

155 (Relay Out Sel) Sets the condition that changes the state of the output relay contacts.	Parameter Number	155
	Related Parameters	133, 156, 192, 240…247, 250…257, 260, 261
	Access Rule	GET/SET
	Data Type	UINT
	Group	Advanced Program Group
	Units	—
	Minimum Value	0
	Maximum Value	22
	Default Value	22

Table 15 -

Options	Description	
0	**Ready/Fault** (Default)	Relay changes state when power is applied. This indicates that the drive is ready for operation. Relay returns drive to shelf state when power is removed or a fault occurs.
1	At Frequency	Drive reached commanded frequency.
6	Above Freq	Drive exceeds the frequency (Hz) value set in Parameter 156 (Relay Out Level) Use Parameter 156 to set threshold.
7	Above Cur	Drive exceeds the current (% Amps) value set in Parameter 156 (Relay Out Level) Use Parameter 156 to set threshold.
20	ParamControl	Enables the output to be controlled over the network communications by writing to Parameter 156 (Relay Out Level) (0 = Off, 1 = ON).
22	EM Brk Cntrl	EM Brake is energized. Program Parameter 260 (EM Brk Off Delay) and Parameter 262 (EM Brk On Delay) for desired action.

Relay Out Level

Sets the trip point for the digital output relay if the value of Parameter 155 (Relay Out Sel) is 6, 7, 8, 10, 16, 17, 18, or 20.

Parameters 155 Setting	Parameter 156 Min./Max.
6	0/400 Hz
7	0/180%
8	0/815V
10	0/100%
16	0.1/9999 sec
17	1/9999 counts
18	1/180°
20	0/1

Parameter Number	156
Related Parameters	155, 158, 161
Access Rule	GET/SET
Data Type	UINT
Group	Advanced Program Group
Units	0.1
Minimum Value	0.0
Maximum Value	9999
Default Value	0.0

Analog Out Sel	Parameter Number	165
Sets the analog output signal (0…10V). The output is used to provide a signal that is proportional to several drives	Related Parameters	135, 166
	Access Rule	GET/SET
	Data Type	UINT
	Group	Advanced Program Group
	Units	See Table 16 - for details
	Minimum Value	
	Maximum Value	
	Default Value	

Table 16 - Analog Output Options

Options		Output Range	Minimum Output Value	Maximum Output Value A066 (Analog Out High)	DIP Switch Position	Related Parameter
0	OutFreq 0…10	0…10V	0V = 0 Hz	P035 (Maximum Freq)	0…10V	101
1	OutCurr 0…10	0…10V	0V = 0 Amps	200% Drive Rated Output Current	0…10V	103
2	OutVolt 0…10	0…10V	0V = 0 Volts	120% Drive Rated Output Volts	0…10V	104
3	OutPowr 0…10	0…10V	0V = 0 kW	200% Drive Rated Power	0…10V	122
4	TstData 0…10	0…10V	0V = 0000	65535 (Hex FFFF)	0…10V	119
15	OutTorq 0…10	0…10V	0V = 0 Amps	200% Drive Rated FLA	0…10V	129

Note: Only output range 0...10V applies with the factory-installed A10 option.

Analog Out High	Parameter Number	166
Scales the maximum output value for parameter 165 source setting	Access Rule	GET/SET
	Data Type	UINT
	Group	Advanced Program Group
	Units	%
	Minimum Value	0%
	Maximum Value	800%
	Default Value	100%

Accel Time 2	Parameter Number	167
When active, sets the rate of acceleration for all speed increases except for jog.	Related Parameters	139, 151, 152, 153, 154, 170…173, 174…177, 240…247
$\frac{\text{Maximum Freq}}{\text{Accel Time}} = \text{Accel Rate}$	Access Rule	GET/SET
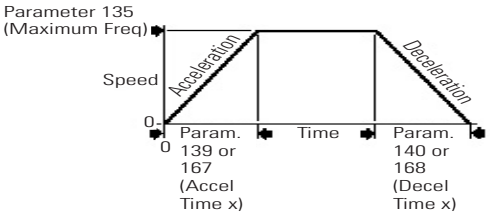	Data Type	UINT
	Group	Advanced Program Group
	Units	0.1 sec
	Minimum Value	0.0
	Maximum Value	600.0
	Default Value	20.0

Decel Time 2	Parameter Number	168
When active, sets the rate of deceleration for all speed decreases except for jog.	Related Parameters	140, 151, 152, 153, 154, 170…173, 174…177, 240…247
$\frac{\text{Maximum Freq}}{\text{Decel Time}} = \text{Decel Rate}$	Access Rule	GET/SET
	Data Type	UINT
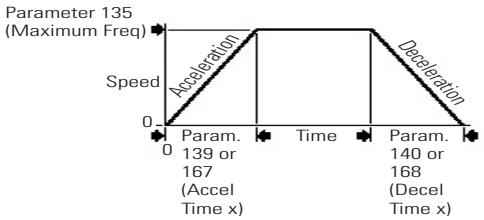	Group	Advanced Program Group
	Units	0.1 sec
	Minimum Value	0.0
	Maximum Value	600.0
	Default Value	20.0

Internal Freq	Parameter Number	169
	Related Parameters	138, 162
Provide the frequency command to drive when Parameter 138 (Speed Reference) is set to 1 **Internal Freq**. When enabled, this parameter changes the frequency command in real time.	Access Rule	GET/SET
	Data Type	UINT
	Group	Advanced Program Group
	Units	0.1 Hz
	Minimum Value	0.0
	Maximum Value	400.0
	Default Value	60.0

170 (Preset Freq 0) ❶ **171 (Preset Freq 1)** **172 (Preset Freq 2)** **173 (Preset Freq 3)** **174 (Preset Freq 4)** **175 (Preset Freq 5)** **176 (Preset Freq 6)** **177 (Preset Freq 7)**	Parameter Number	170…173, 174…177
	Related Parameters	138, 139, 140, 151, 152, 152, 153, 167, 168, 240…247, 250…257
	Access Rule	GET/SET
	Data Type	UINT
	Group	Advanced Program Group
	Units	0.1 Hz
	Minimum Value	0.0
	Maximum Value	400.0
	Default Value	See Table 17

Table 17 - 170…177 Preset Freq Options

Values Provides a fixed frequency command value when 151…153 (Digital Inx Sel) is set to 4 **Preset Frequencies**.			170 Default ❶	0.0 Hz
			171 Default	5.0 Hz
			172 Default	10.0 Hz
			173 Default	20.0 Hz
			174 Default	30.0 Hz
			175 Default	40.0 Hz
			176 Default	50.0 Hz
			177 Default	60.0 Hz
			Min./Max.	0.0/400.0 Hz
			Display	0.1 Hz
Input State of Digital In 1 (I/O Terminal 05 when Parameter 151 = 4)	**Input State of Digital In 2 (I/O Terminal 06 when Parameter 152 = 4)**	**Input State of Digital In 3 (I/O Terminal 07 when Parameter 153 = 4)**	**Frequency Source**	**Accel/Decel Parameter Used** ❷
0	0	0	170 (Preset Freq 0)	(Accel Time 1)/(Decel Time 1)
1	0	0	171 (Preset Freq 1)	(Accel Time 1)/(Decel Time 1)
0	1	0	172 (Preset Freq 2)	(Accel Time 2)/(Decel Time 2)
1	1	0	173 (Preset Freq 3)	(Accel Time 2)/(Decel Time 2)
0	0	1	174 (Preset Freq 4)	(Accel Time 3)/(Decel Time 3)
1	0	1	175 (Preset Freq 5)	(Accel Time 3)/(Decel Time 3)
0	1	1	176 (Preset Freq 6)	(Accel Time 4)/(Decel Time 4)
1	1	1	177 (Preset Freq 7)	(Accel Time 4)/(Decel Time 4)

❶ To activate 170 (Preset Freq 0) set 138 (Speed Reference) to option 4 **Preset Freq**.

❷ When a Digital Input is set to **Accel 2 and Decel 2**, and the input is active, that input overrides the settings in this table.

Jog Frequency Sets the output frequency when the jog command is issued.	Parameter Number	178
	Related Parameters	135, 151, 152, 153, 154, 179
	Access Rule	GET/SET
	Data Type	UINT
	Group	Advanced Program Group
	Units	0.1 Hz
	Minimum Value	0.0
	Maximum Value	400.0
	Default Value	10.0

Jog Accel/Decel Sets the acceleration and deceleration time when a jog command is issued.	Parameter Number	179
	Related Parameters	178, 151, 152, 153, 154
	Access Rule	GET/SET
	Data Type	UINT
	Group	Advanced Program Group
	Units	0.1 sec
	Minimum Value	0.1
	Maximum Value	600.0
	Default Value	10.0

DC Brake Time Sets the length of time that DC brake current is injected into the motor. See Parameter 181 DC Brake Level.	Parameter Number	180
	Related Parameters	137, 181
	Access Rule	GET/SET
	Data Type	UINT
	Group	Advanced Program Group
	Units	0.1 sec
	Minimum Value	0.0
	Maximum Value	99.9 (Setting of 99.9 = Continuous)
	Default Value	0.0

DC Brake Level Defines the maximum DC brake current, in amps, applied to the motor when Parameter 137 (Stop Mode) is set to either **Ramp** or **DC Brake**.	Parameter Number	181
	Related Parameters	137, 180
	Access Rule	GET/SET
	Data Type	UINT
	Group	Advanced Program Group
	Units	0.1 A
	Minimum Value	0.0
	Maximum Value	Drive rated amps X 1.8
	Default Value	Drive rated amps X 0.05

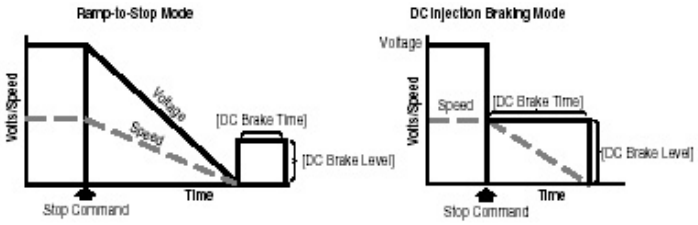

ATTENTION: • If a hazard of injury due to movement of equipment or material exists, an auxiliary mechanical braking device must be used.

ATTENTION: • This feature should not be used with synchronous or permanent magnet motors. Motors may be demagnetized during braking.

DB Resistor Sel

Stop drive before changing this parameter.

Enables/disables external dynamic braking.

Setting	Min./Max.
0	Disabled
1	Normal RA Res (5% Duty Cycle)
2	No Protection (100% Duty Cycle)
3…99	x% Duty Cycle Limited (3…99% of Duty Cycle)

Parameter Number	182
Related Parameters	137
Access Rule	GET/SET
Data Type	UINT
Group	Advanced Program Group
Units	1
Minimum Value	0
Maximum Value	99
Default Value	0

S Curve %

Sets the percentage of acceleration or deceleration time that is applied to ramp as S Curve. Time is added, half at the beginning and half at the end of the ramp.

Parameter Number	183
Access Rule	GET/SET
Data Type	UINT
Group	Advanced Program Group
Units	1%
Minimum Value	0
Maximum Value	100
Default Value	0% disabled

Figure 38 - S Curve

Example:
Accel Time = 10 Seconds
S Curve Setting = 50%
S Curve Time = 10 × 0.5 = 5 Seconds
Total Time = 10 + 5 = 15 Seconds

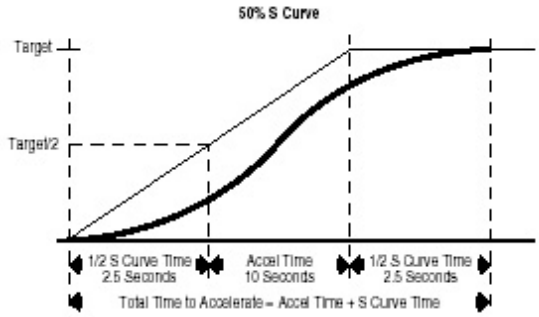

Boost Select	Parameter Number	184
Sets the boost voltage (% of Parameter 131 [Motor NP Volts]) and redefines the Volts per Hz curve. Active when Parameter 225 (Torque Perf Mode) = 0V/Hz Drive may add additional voltage unless Option 5 is selected.	Related Parameters	104, 131, 132, 185, 186, 187, 225
	Access Rule	GET/SET
	Data Type	UINT
	Group	Advanced Program Group
See Table 18 - for details	Units	—
	Minimum Value	0
	Maximum Value	14
	Default Value	8

Table 18 - Boost Select Options

Options	Description	
0	Custom V/Hz	Variable Torque (Typical fan/pump curves)
1	30.0, VT	
2	35.0, VT	
3	40.0, VT	
4	45.0, VT	
5	0.0 no IR	Constant Torque
6	0.0	
7	2.5, CT (Default for 5 Hp/4.0 kW Drive)	
8	5.0, CT Default	
9	7.5,CT	
10	10.0,CT	
11	12.5,CT	
12	15.0,CT	
13	17.5,CT	
14	20.0,CT	

Figure 39 -

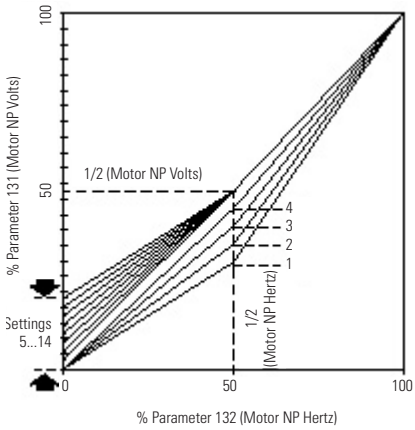

Start Boost Sets the boost voltage (% of Parameter 131 [Motor NP Volts]) and redefines the Volts per Hz curve when Parameter 184 (Boost Select) = 0 Custom V/Hz and Parameter 225 (Torque Perf Mode) = 0V/Hz.	Parameter Number	185
	Related Parameters	131, 132, 134, 135, 184, 186, 187, 188, 225
	Access Rule	GET/SET
	Data Type	UINT
	Group	Advanced Program Group
	Units	1.1%
	Minimum Value	0.0%
	Maximum Value	25.0%
	Default Value	2.5%

Figure 40 -

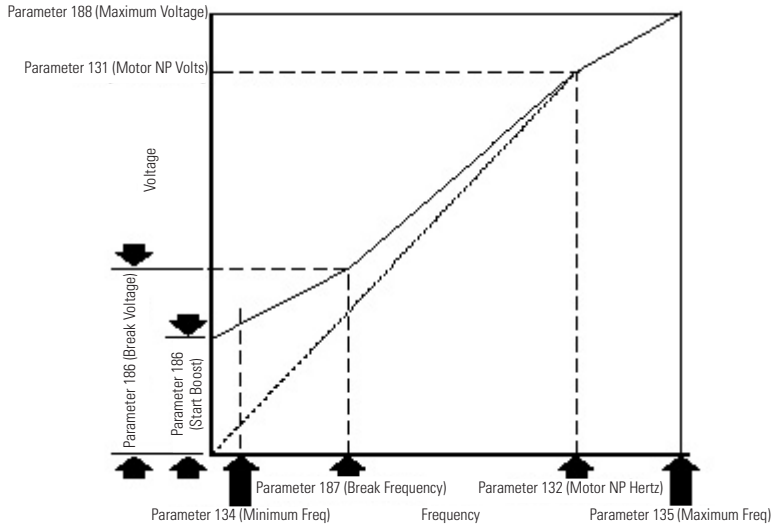

Brake Voltage Sets the frequency where brake voltage is applied when Parameter 184 (Boost Select) = 0 Custom V/Hz and Parameter 225 (Torque Perf Mode) = 0V/Hz.	Parameter Number	186
	Related Parameters	131, 132, 134, 135, 184, 185, 187, 188, 225
	Access Rule	GET/SET
	Data Type	UINT
	Group	Advanced Program Group
	Units	1.1%
	Minimum Value	0.0%
	Maximum Value	100.0%
	Default Value	25.0%

Brake Frequency	Parameter Number	187
Sets the frequency where brake frequency is applied when Parameter 184 (Boost Select) = 0 Custom V/Hz and Parameter 225 (Torque Perf Mode) = 0V/Hz.	Related Parameters	131, 132, 134, 135, 184, 185, 186, 188, 225
	Access Rule	GET/SET
	Data Type	UINT
	Group	Advanced Program Group
	Units	0.1 Hz
	Minimum Value	0.0 Hz
	Maximum Value	400.0 Hz
	Default Value	15.0 Hz

Maximum Voltage	Parameter Number	188
Sets the highest voltage that the drive outputs.	Related Parameters	104, 185, 186, 187
	Access Rule	GET/SET
	Data Type	UINT
	Group	Advanced Program Group
	Units	1V AC
	Minimum Value	20V AC
	Maximum Value	Drive Rated Volts
	Default Value	Drive Rated Volts

Current Limit 1	Parameter Number	189
Maximum output current that is allowed before current limiting occurs	Related Parameters	133, 218
	Access Rule	GET/SET
	Data Type	UINT
	Group	Advanced Program Group
	Units	0.1 A
	Minimum Value	0.1 A
	Maximum Value	Drive rated amps X 1.8
	Default Value	Drive rated amps X 1.5

Motor OL Select	Parameter Number	190
Drive provides Class 10 motor overload protection. Setting 0…2 select the derating factor for I^2t overload function. 0 = No Derate 1 = Min. Derate 2 = Max. Derate	Related Parameters	132, 133
	Access Rule	GET/SET
	Data Type	UINT
	Group	Advanced Program Group
	Units	1
	Minimum Value	0
	Maximum Value	2
	Default Value	0

Figure 41 - Overload Trip Curves

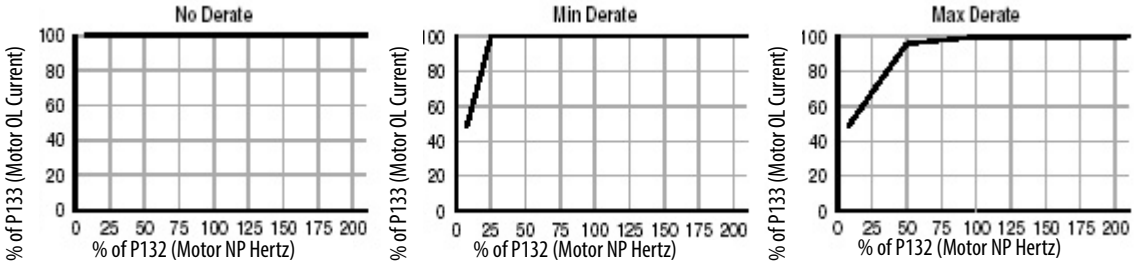

PWM Frequency Sets the carrier frequency the PWM output waveform. The Figure 42 provides derating guidelines that are based on the PWM frequency setting.	Parameter Number	191
	Related Parameters	224
	Access Rule	GET/SET
	Data Type	UINT
	Group	Advanced Program Group
	Units	0.l Hz
	Minimum Value	2.0 Hz
	Maximum Value	16.0 Hz
	Default Value	4.0 Hz

Figure 42 -

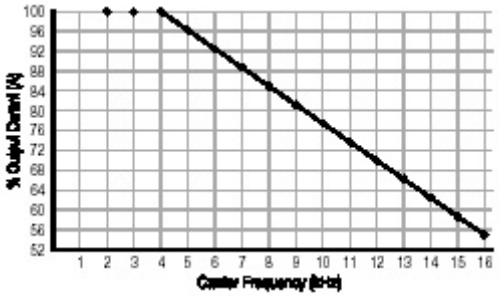

Auto Rstrt Tries Set the maximum number of times the drive attempts to reset a fault and restart.	Parameter Number	192
	Related Parameter	155, 158, 161, 193
	Access Rule	GET/SET
	Data Type	UINT
	Group	Advanced Program Group
	Units	1
	Minimum Value	0
	Maximum Value	9
	Default Value	0

Clear a Type 1 Fault and Restart the Drive

1. Set Parameter 192 (Auto Rstrt Tries) to a value other than 0.
2. Set Parameter 193 (AutoRstrt Delay) to a value other than 0.

Clear an Overvoltage, Undervoltage, or Heatsink OvrTmp Fault without Restarting the Drive

1. Set Parameter 192 (Auto Rstrt Tries) to a value other than 0.
2. Set Parameter 193 (AutoRstrt Delay) to 0.

ATTENTION: Equipment damage and/or personal injury may result if this parameter is used in an inappropriate application. Do not use this function without considering applicable local, national, and international codes, standards, regulations, or industry guidelines.

Auto Rstrt Delay Sets time between restart attempts when Parameter 192 (Auto Rstrt Tries) is set to a value other than zero.	Parameter Number	193
	Related Parameters	192
	Access Rule	GET/SET
	Data Type	UINT
	Group	Advanced Program Group
	Units	0.1 sec
	Minimum Value	0.0
	Maximum Value	300.0 sec
	Default Value	1.0 sec

Start at PowerUp	Parameter Number	194
Stop drive before changing this parameter.	Related Parameters	192
	Access Rule	GET/SET
Enables/disables a feature that allows a Start or Run command to automatically cause the drive to resume running at command speed after the drive input is restored. Requires a digital input configured Run or Start and a valid start contact.	Data Type	UINT
	Group	Advanced Program Group
0 = Disabled	Units	—
1 = Enabled	Minimum Value	0
	Maximum Value	1
ATTENTION: Equipment damage and/or personal injury may result if this parameter is used in an inappropriate application. Do not use this function without considering applicable local, national, and international codes, standards, regulations, or industry guidelines.	Default Value	0

Reverse Disable	Parameter Number	195
Stop drive before changing this parameter.	Related Parameters	106
	Access Rule	GET/SET
Enables/disables the function that allows the direction of the motor rotation to be changed. The reverse command may come from a digital command or serial command. All reverse inputs including two-wire Run Reverse are ignored with reverse disabled.	Data Type	UINT
	Group	Advanced Program Group
0 = Disabled	Units	—
1 = Enabled	Minimum Value	0
	Maximum Value	1
	Default Value	0

Flying Start En	Parameter Number	196
	Access Rule	GET/SET
Sets the condition that allows the drive to reconnect to a spinning motor at actual RPM.	Data Type	UINT
0 = Disabled	Group	Advanced Program Group
1 = Enabled	Units	—
	Minimum Value	0
	Maximum Value	1
	Default Value	0

Compensation	Parameter Number	197
	Access Rule	GET/SET
Enables/disables correction options that may improve problems with motor instability	Data Type	UINT
0 = Disabled	Group	Advanced Program Group
1 = Electrical (Default)	Units	—
Some drive/motor combinations have inherent instabilities that are exhibited as non-sinusoidal motor currents. This setting attempts to correct this condition	Minimum Value	0
2 = Mechanical	Maximum Value	3
Some motor/load combinations have mechanical resonances that can be excited by the drive current regulator. This setting slows down the current regulator response and attempts to correct this condition.	Default Value	1
3 = Both		

SW Current Trip	Parameter Number	198
	Related Parameters	133
Enables/disables a software instantaneous (within 100 ms) current trip.	Access Rule	GET/SET
	Data Type	UINT
	Group	Advanced Program Group
	Units	0.1 A
	Minimum Value	0.0
	Maximum Value	Drive rated amps x 2
	Default Value	0.0 (Disabled)

Process Factor	Parameter Number	199
	Related Parameters	110
Scales the output frequency value displayed by Parameter 110 (Process Display). Output Freq x Process Factor = Process Display	Access Rule	GET/SET
	Data Type	UINT
	Group	Advanced Program Group
	Units	0.1
	Minimum Value	0.1
	Maximum Value	999.9
	Default Value	30.0

Fault Clear	Parameter Number	200
	Access Rule	GET/SET
Stop drive before changing this parameter.	Data Type	UINT
	Group	Advanced Program Group
Resets a fault and clears the fault queue. Used primarily to clear a fault over network communications. 0 = Ready/Idle (Default) 1 = Reset Fault 2 = Clear Buffer (Parameters 107…109 [Fault x Code])	Units	—
	Minimum Value	0
	Maximum Value	2
	Default Value	0

Program Lock	Parameter Number	201
	Access Rule	GET/SET
Protects parameters against change by unauthorized personnel. 0 = Unlocked 1 = Locked	Data Type	UINT
	Group	Advanced Program Group
	Units	—
	Minimum Value	0
	Maximum Value	1
	Default Value	0

Comm Loss Action	Parameter Number	205
	Related Parameters	115, 137, 206
Selects the drive's response to a loss of the communication connection or excessive communication errors. 0 = Fault (Default) Drive will fault on an F81 Comm Loss and coast to stop 1 = Coast Stop Stops drive via coast to stop 2 = Stop Stops via Parameter 137 (Stop Mode) setting 3 = Continu Last Drive continues operating at communication commanded speed that is saved in RAM	Access Rule	GET/SET
	Data Type	UINT
	Group	Advanced Program Group
	Units	—
	Minimum Value	0
	Maximum Value	3
	Default Value	0

Comm Loss Time	Parameter Number	206
	Related Parameters	115, 205
Sets the time that the drive remain in communication loss before implanting the option selected in Parameter 205 (Comm Loss Action).	Access Rule	GET/SET
	Data Type	UINT
	Group	Advanced Program Group
	Units	0.1 sec
	Minimum Value	0.1 sec
	Maximum Value	60.0 sec
	Default Value	15.0 sec

Anlg Out Setpnt	Parameter Number	209
	Related Parameter	165
When parameter 165 (Analog Out Sel) is set to option 18, this sets the percentage of the analog output desired	Access Rule	GET/SET
	Data Type	UINT
	Group	Advanced Program Group
	Units	0.1%
	Minimum Value	0.0%
	Maximum Value	100.0%
	Default Value	0.0%

Anlg In 0…10V Lo	Parameter Number	210
	Related Parameter	121, 134, 138, 222
Stop drive before changing this parameter.	Access Rule	GET/SET
	Data Type	UINT
Sets the analog input level that corresponds to parameter 134 (Minimum Freq) if a 0…10V input is used by parameter 138 (Speed Reference)	Group	Advanced Program Group
	Units	0.1%
	Minimum Value	0.0%
	Maximum Value	100.0%
	Default Value	0.0%

Figure 43 -

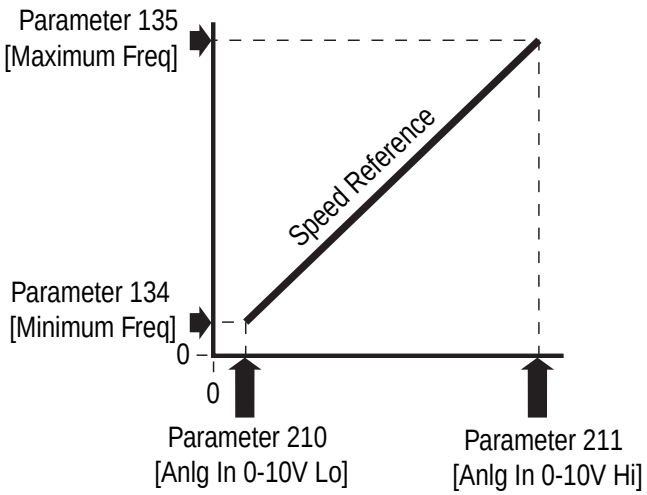

Anlg In 0…10V HI		
Stop drive before changing this parameter. Sets the analog input level that corresponds to parameter 135 (Maximum Freq) if a 0…10V input is used by parameter 138 (Speed Reference). Analog inversion can be accomplished by setting this value smaller than parameter 210 (Anlg In 0…10V Lo).	Parameter Number	211
	Related Parameter	121, 135, 138, 222, 223
	Access Rule	GET/SET
	Data Type	UINT
	Group	Advanced Program Group
	Units	0.1%
	Minimum Value	0.0%
	Maximum Value	100.0%
	Default Value	0.0%

Slip Hertz @ FLA		
Compensates for the inherent slip in an induction motor. This frequency is added to the commanded output frequency based on motor current.	Parameter Number	214
	Related Parameter	133
	Access Rule	GET/SET
	Data Type	UINT
	Group	Advanced Program Group
	Units	0.1 Hz
	Minimum Value	0.0 Hz
	Maximum Value	10.0 Hz
	Default Value	2.0 Hz

Process Time Lo		
Scales the time value when the drive is running at Parameter 134 (Minimum Freq). When set to a value other than zero, Parameter 110 (Process Display) indicates the duration of the process.	Parameter Number	215
	Related Parameters	110, 134
	Access Rule	GET/SET
	Data Type	UNIT
	Group	Advanced Setup
	Units	Hz
	Minimum Value	0.00
	Maximum Value	99.99
	Default Value	0.00

Process Time Hi		
Scales the time value when the drive is running at Parameter 135 (Maximum Freq). When set to a value other than zero, Parameter 110 (Process Display) indicates the duration of the process.	Parameter Number	216
	Related Parameters	110, 135
	Access Rule	GET/SET
	Data Type	UNIT
	Group	Advanced Setup
	Units	Hz
	Minimum Value	0.00
	Maximum Value	99.99
	Default Value	0.00

Bus Reg Mode	Parameter Number	217
Enables the bus regulator. 0 = Disable 1 = Enabled	Related Parameters	
	Access Rule	GET/SET
	Data Type	UNIT
	Group	Advanced Setup
	Units	—
	Minimum Value	0
	Maximum Value	1
	Default Value	1

Current Limit 2	Parameter Number	218
Maximum output current that is allowed before current limiting occurs. This parameter is only active if Parameters 151, 152, 153, and 154 (Digital Inx Sel) is set to 25 **Current Lmt2** and is active.	Related Parameters	133, 151, 152, 153, 154, 189
	Access Rule	GET/SET
	Data Type	UINT
	Group	Advanced Program Group
	Units	0.1 A
	Minimum Value	0.1 A
	Maximum Value	Drive rated amps x 1.8
	Default Value	Drive rated amps x 1.5

Skip Frequency	Parameter Number	219
Sets the frequency at which the drive will not operate.	Related Parameters	220
	Access Rule	GET/SET
	Data Type	UINT
	Group	Advanced Program Group
	Units	0.1 hz
	Minimum Value	0.0
	Maximum Value	400.0 Hz
	Default Value	0.0 Hz

Skip Frq Band	Parameter Number	220
Determines the brand width around Parameter 219 (Skip Frequency). Parameter 220 (Skip Frquency) is split applying 1/2 above and 1/2 below the actual skip frequency. A setting of 0.0 disables this parameter.	Related Parameters	219
	Access Rule	GET/SET
	Data Type	UINT
	Group	Advanced Program Group
	Units	0.1 Hz
	Minimum Value	0.0 Hz
	Maximum Value	30.0 Hz
	Default Value	0.0 Hz

Figure 44 -

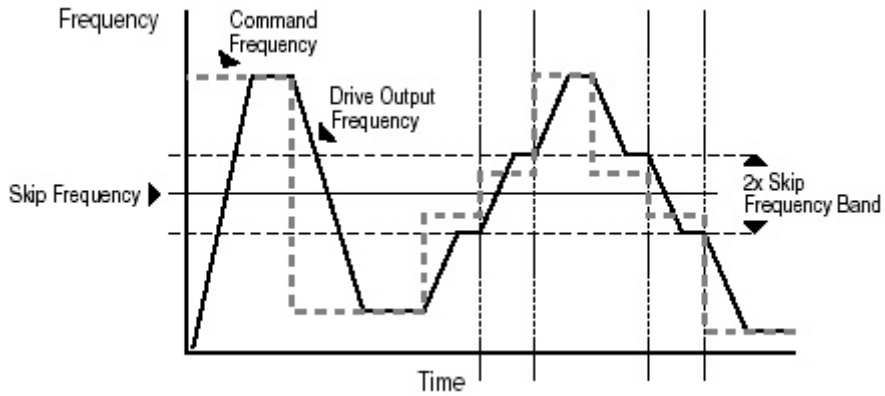

Stall Fault Time	Parameter Number	221
Sets for the fault time that the drive remains in stall mode before a fault is issued. 0 = 60 sec (Default) 1 = 120 sec 2 = 240 sec 3 = 360 sec 4 = 480 sec 5 = **Flt Disabled**	Access Rule	GET/SET
	Data Type	UINT
	Group	Advanced Program Group
	Units	—
	Minimum Value	0
	Maximum Value	5
	Default Value	0

Analog In Loss		
Selects drive action when an input signal loss is detected. Signal loss is defined as an analog signal less than 1V. The signal loss event ends and normal operation resumes when the input signal level is greater than or equal to 1.5V. If using a 0…10V analog input, set parameter 210 (Anlg In 0…10V Lo) to a minimum of 20% (i.e., 2 volts).	Parameter Number	222
	Related Parameters	210, 211, 232
	Access Rule	GET/SET
	Data Type	UINT
	Group	Advanced Program Group
	Units	See Table 19 - for details
	Minimum Value	
	Maximum Value	
	Default Value	

Table 19 -

Options	Description	
0	Disabled (Default)	
1	Fault (F29)	F29 Analog Input Loss
2	Stop	Uses P037 (Stop Mode)
3	Zero Ref	Drive runs at zero speed reference
4	Min Freq Ref	Drive runs at minimum frequency
5	Max Freq Ref	Drive runs at maximum frequency
6	Int Freq Ref	Drive runs at internal frequency

10V Bipolar Enbl		
Enables/disables bipolar control. In bipolar mode, direction is commanded by the sign of the reference. Options 0 = Unipolar In (Default) 0…10V only 1 = Bipolar In +/- 10V	Parameter Number	223
	Related Parameters	138, 211
	Access Rule	GET/SET
	Data Type	UINT
	Group	Advanced Program Group
	Units	—
	Minimum Value	0
	Maximum Value	1
	Default Value	0

Var PWM Disable		
Stop drive before changing this parameter. Enables/disables a feature that varies the carrier frequency for the PWM output waveform that is defined by Parameter 191 (PWM Frequency). 0 = Enabled 1 = Disabled Disabling this feature when low frequency condition exists may result in IGBT stress and nuisance tripping.	Parameter Number	224
	Related Parameters	191
	Access Rule	GET/SET
	Data Type	UINT
	Group	Advanced Program Group
	Units	—
	Minimum Value	0
	Maximum Value	1
	Default Value	0

Torque Perf Mode	Parameter Number	225
	Related Parameters	184, 185, 186, 187, 227
Stop drive before changing this parameter.	Access Rule	GET/SET
	Data Type	UINT
Enables/disables sensorless vector control operation. 0 = V/Hz 1 = Sensrls Vect	Group	Advanced Program Group
	Units	—
	Minimum Value	0
	Maximum Value	1
	Default Value	1

Motor NP FLA	Parameter Number	226
	Related Parameters	227
Set to the motor nameplate full load amps.	Access Rule	GET/SET
	Data Type	UINT
	Group	Advanced Program Group
	Units	0.1 A
	Minimum Value	0.1
	Maximum Value	Drive rated amps x 2
	Default Value	Drive rated amps

Autotune	Parameter Number	227
Stop drive before changing this parameter.	Related Parameters	225, 226, 228, 229
Provides an automatic method for setting Parameter 228 (IR Voltage Drop) and Parameter 229 (Flux Current Ref), that affect sensorless vector performance. Parameter 226 (Motor NP FLA) must be set to the motor nameplate full load amps before running the Autotune procedure. Provides an automatic method for setting A128 (IR Voltage Drop) and A129 (Flux Current Ref), that affect sensorless vector performance. Parameter A126 (Motor NP FLA) must be set to the motor nameplate full load amps before running the Autotune procedure.	Access Rule	GET/SET
0 = Ready/Idle (Default) 1 = Static Tune 2 = Rotate Tune	Data Type	UINT
Ready (0) — Parameter returns to this setting following a Static Tune or Rotate Tune.	Group	Advanced Program Group
Static Tune (1) — A temporary command that initiates a non-rotational motor stator resistance test for the best possible automatic setting of A128 (IR Voltage Drop). A start command is required following initiation of this setting. The parameter returns to Ready (0) following the test, at that time another start transition is required to operate the drive in normal mode. Used when motor cannot be uncoupled from the load.	Units	—
Rotate Tune (2) — A temporary command that initiates a Static Tune followed by a rotational test for the best possible automatic setting of A129 (Flux Current Ref). A start command is required following initiation of this setting. The parameter returns to Ready (0) following the test, at that time another start transition is required to operate the drive in normal mode.	Minimum Value	0
	Maximum Value	3
	Default Value	0

IMPORTANT Used when motor is uncoupled from the load. Results may not be valid if a load is coupled to the motor during this procedure.

ATTENTION: Rotation of the motor in an undesired direction can occur during this procedure. To guard against possible injury and/or equipment damage, it is recommended that the motor be disconnected from the load before proceeding.

If the Autotune routine fails, an F80 SVC Autotune fault is displayed.

IR Voltage Drop Value of volts dropped across the resistance of the motor stator.	Parameter Number	228
	Related Parameters	227
	Access Rule	GET/SET
	Data Type	UINT
	Group	Advanced Program Group
	Units	0.1V AC
	Minimum Value	0.0
	Maximum Value	230
	Default Value	Based on Drive Rating

Flux Current Ref Value of amps for full motor flux.	Parameter Number	229
	Related Parameter	227
	Access Rule	GET/SET
	Data Type	UINT
	Group	Advanced Program Group
	Units	0.01 A
	Minimum Value	0.00
	Maximum Value	Motor NP Volts
	Default Value	Based on Drive Rating

EM Brk Off Delay Sets the time that the drive remains at minimum frequency before ramping to the commanded frequency and energizing the brake coil relay when Parameter 137 (Stop Mode) is set to option 8 or 9.	Parameter Number	260
	Related Parameters	137
	Access Rule	GET/SET
	Data Type	UNIT
	Group	Advanced Setup
	Units	0.01 sec
	Minimum Value	0.01 sec
	Maximum Value	10 sec
	Default Value	0.0 sec

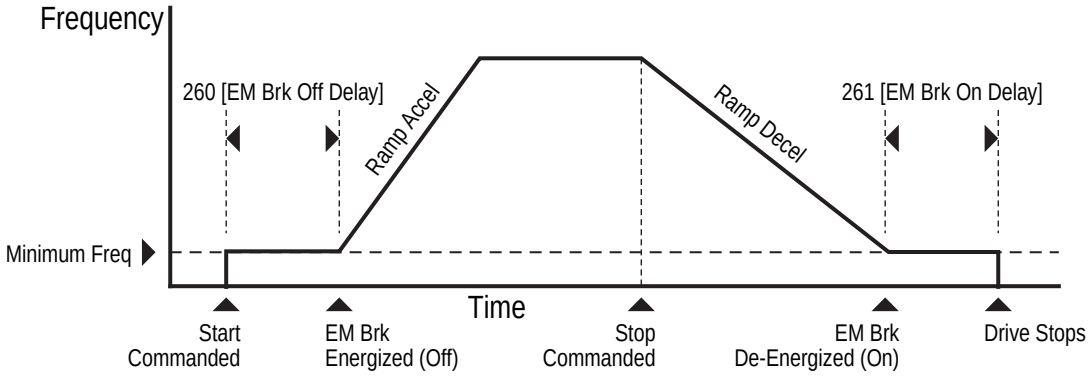

EM Brk On Delay		
Sets the time that the drive remains at minimum frequency before stopping and de-energizing the brake coil relay when Parameter 137 (Stop Mode) is set to option 8 or 9.	Parameter Number	261
	Related Parameters	137
	Access Rule	GET/SET
	Data Type	UNIT
	Group	Advanced Setup
	Units	0.01 sec
	Minimum Value	0.01 sec
	Maximum Value	10.00 sec
	Default Value	0.0 sec

MOP Reset Sel		
Sets the drive to save the current MOP Reference command. 0 = Zero MOP Ref This option clamps Parameter 169 (Internal Freq) at 0.0 Hz when drive is not running. 1 = Save MOP Ref (Default) Reference is saved in Parameter 169 (Internal Freq).	Parameter Number	262
	Related Parameters	169
	Access Rule	Get/Set
	Data Type	UINT
	Group	Advanced Program Group
	Units	—
	Minimum Value	0
	Maximum Value	1
	Default Value	0

DB Threshold		
Sets the DC bus Voltage Threshold for Dynamic Brake operation. If the DC bus voltage falls below the value set in this parameter, the Dynamic Brake will not turn on. Lower values make the Dynamic Braking function more responsive, but may result in nuisance Dynamic Brake activation.	Parameter Number	263
	Access Rule	GET/SET
	Data Type	UINT
	Group	Advanced Program Group
	Units	—
	Minimum Value	0.0%
	Maximum Value	110.0%
	Default Value	100%

Notes:

HOA Keypad Operation

Introduction

This chapter provides a basic understanding of the programming of the factory-installed optional built-in Hand/Off/Auto (HOA) keypad. The HOA keypad can be programmed for maintained or momentary operation.

Figure 45 - Optional HOA Keypads

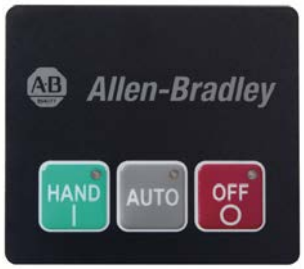

Available on Bulletin 280, 281

Available on Bulletin 281

Available on Bulletin 284

Keypad Description

The keys that are found on the optional HOA keypads are described below:

Table 20 - HOA Keypad — Key Description

	HAND	The Hand key initiates starter operation
	AUTO	The Auto key allows for Start/Stop control via the communications network
	OFF	If the starter is running, pressing the OFF key causes the starter to stop.
	REV	The REV key selects reverse direction of the motor
	FWD	The FWD key selects forward direction of the motor
	DIR Arrow	The Dir arrow selects the direction of the motor, either forward or reverse.
	JOG	When pressed, JOG is initiated if no other control devices are sending a stop command. Releasing the key causes the drive to stop, using selected stop mode.

Figure 46 - Bulletin 280, 281 Hand -Off-Auto Selector Keypad

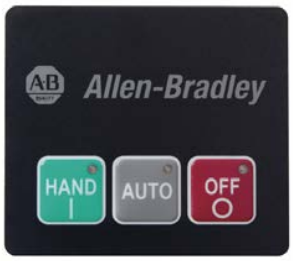

The following state transition matrix summarizes the HOA Keypad when parameter 45 "Keypad Mode" is set to 1=momentary.

	HAND STOP	HAND FWD	AUTO
AUTO	Command motor off and Transition to "AUTO"	Ignore	Ignore
HAND	Command motor ON and Transition to "HAND FWD"	Ignore	Ignore
OFF	Ignore	Command motor OFF and transition to "HAND STOP"	Command motor off and transition to "HAND STOP"

The following state transition matrix summarizes the HOA Keypad when parameter 45 "Keypad Mode" is set to 0=maintained.

	HAND STOP	HAND FWD	AUTO
NO KEY PRESSED	Ignore	Command motor off and transition to "HAND STOP"	Ignore
AUTO	Command motor off and Transition to "AUTO"	Ignore	Ignore
HAND	Command motor ON and transition to "HAND FWD"	Ignore	Ignore
OFF	Ignore	Command motor off and transition to "HAND STOP"	Command motor off and Transition to "HAND STOP"

Figure 47 - Bulletin 281 Hand-Off-Auto Selector Keypad with Forward/Reverse Function

The following state transition matrix summarizes the HOA behavior when parameter 45 “Keypad Mode” is set to 1=momentary

	HAND STOP	HAND FWD	HAND REV	AUTO
FWD	Set FWD LED	Ignore	Ignore	Set FWD LED
REV	Set REV LED	Ignore	Ignore	Set REV LED
AUTO	Command motor off and Transition to “AUTO”	Ignore	Ignore	Ignore

HAND	If (FWD LED) transition to “HAND FWD”
	If (REV LED)
	Transition to “HAND REV”
		Ignore	Ignore	Ignore

OFF	Ignore	Command motor off and transition to “HAND STOP”	Command motor off and transition to “HAND STOP”	Command motor off and Transition to “HAND STOP”

The following state transition matrix summarizes the HOA behavior when parameter 45 “Keypad Mode” is set to 0=maintained

	HAND STOP	HAND FWD	HAND REV	AUTO
NO KEY PRESSED	Ignore	Command motor off and transition to “HAND STOP”	Command motor off and transition to “HAND STOP”	Ignore
FWD	Set FWD LED	Ignore	Ignore	Set FWD LED
REV	Set REV LED	Ignore	Ignore	Set REV LED
AUTO	Command motor off and Transition to “AUTO”	Ignore	Ignore	Ignore

HAND	If (FWD LED) transition to “HAND FWD”
	If (REV LED)
	Transition to “HAND REV”
		Ignore	Ignore	Ignore

OFF	Ignore	Command motor off and transition to “HAND STOP”	Command motor off and transition to “HAND STOP”	Command motor off and transition to “HAND STOP”

Figure 48 - Bulletin 284 Hand-Off-Auto Selector Keypad with JOG and Direction Arrow Functions

The following state transition matrix summarizes the Jog/HOA behavior when Parameter 45, Keypad Mode, is set to 1 = momentary.

	HAND STOP	HAND FWD	HAND REV	JOG FWD	JOG REV	AUTO
	If (FWD LED) Set REV LED Else If (REV LED) Set FWD LED	If (FWD LED) Set REV LED Else If (REV LED) Set FWD LED	If (FWD LED) Set REV LED Else If (REV LED) Set FWD LED	Ignore	Ignore	Ignore
	If (FWD LED) transition to JOG FWD If (REV LED) Transition to JOG REV	Ignore	Ignore	Ignore	Ignore	Ignore
	Command motor off and Transition to AUTO	Ignore	Ignore	Ignore	Ignore	Ignore
	If (FWD LED) transition to HAND FWD Else If (REV LED) Transition to HAND REV	Ignore	Ignore	Ignore	Ignore	Ignore
No Key Pressed	Ignore	Ignore	Ignore	Command motor off and transition to HAND STOP	Command motor off and transition to HAND STOP	Ignore
	Ignore	Command motor off and transition to HAND STOP	Command motor off and transition to HAND STOP	Command motor off and transition to HAND STOP	Command motor off and transition to HAND STOP	Command motor off and Transition to HAND STOP

The following state transition matrix summarizes the Jog/HOA behavior when Parameter 45 Keypad Mode is set to 0 = maintained.

	HAND STOP	HAND FWD	HAND REV	JOG FWD	JOG REV	AUTO
No Key Pressed	Ignore	Command motor off and transition to HAND STOP	Command motor off and transition to HAND STOP	Command motor off and transition to HAND STOP	Command motor off and transition to HAND STOP	Ignore
	If (FWD LED) Set REV LED Else If (REV LED) Set FWD LED	Ignore	Ignore	Ignore	Ignore	Ignore
	If (FWD LED) transition to JOG FWD If (REV LED) Transition to JOG REV	Ignore	Ignore	Ignore	Ignore	Ignore
	Command motor off and Transition to AUTO	Ignore	Ignore	Ignore	Ignore	Ignore
	If (FWD LED) transition to HAND FWD If (REV LED) Transition to HAND REV	Ignore	Ignore	Ignore	Ignore	Ignore
	Ignore	Command motor off and transition to HAND STOP	Command motor off and transition to HAND STOP	Command motor off and transition to HAND STOP	Command motor off and transition to HAND STOP	Command motor off and transition to HAND STOP

Keypad Disable and HOA via Parameter Modification

Parameter 46 "Keypad Disable", disables the "HAND", "FWD" and "REV" buttons on the HOA keypad. The "OFF" and "AUTO" buttons are always enabled, even if parameter 46 is set to "1=disable". See *Chapter 9, ArmorStart Motion and Keypad Disable with DeviceLogix* for an example of how to dynamically disable the keypad.

NOTE: In nearly all instances, if the processor detects multiple buttons are pressed simultaneously, the software interprets this as a "no button pressed" condition. The only exception to this rule is if multiple buttons are pressed and one of them is the "OFF" button. If the "OFF" button is pressed in combination with any combination of other buttons, the processor interprets this the same as if the "OFF" button were pressed by itself.

DeviceNet Commissioning

This chapter refers to Bulletin 280D, 281D, and 284D products.

Establishing a DeviceNet Node Address

The ArmorStart is shipped with a default node address of 63 and Autobaud enabled. Each device on a DeviceNet network must have a unique node address or MAC ID that can be set to a value from 0 to 63. Keep in mind that most DeviceNet systems use address 0 for the master device (Scanner) and node address 63 should be left vacant for introduction of new slave devices. The ArmorStart offers two methods for node commissioning as shown below.

The node address for a device can be changed using software or by setting hardware switches that reside on the back of the control module. While both methods yield the same result, it is good practice to choose one method and deploy it throughout the system.

Node Commissioning using Hardware

The ArmorStart is shipped with the hardware rotary switches set to a value of (99). If the switches are set to a value (64) or above, the device will automatically configure itself to the software node address. If the switches are set to a value of (63) or less, the device is at the node address that is designated by the switch configuration.

To set an address using the hardware rotary switches, simply set the switches to the desired node address and cycle power to the unit. The Device restarts at the new address.

Figure 49 - Rotary Node Address Configuration

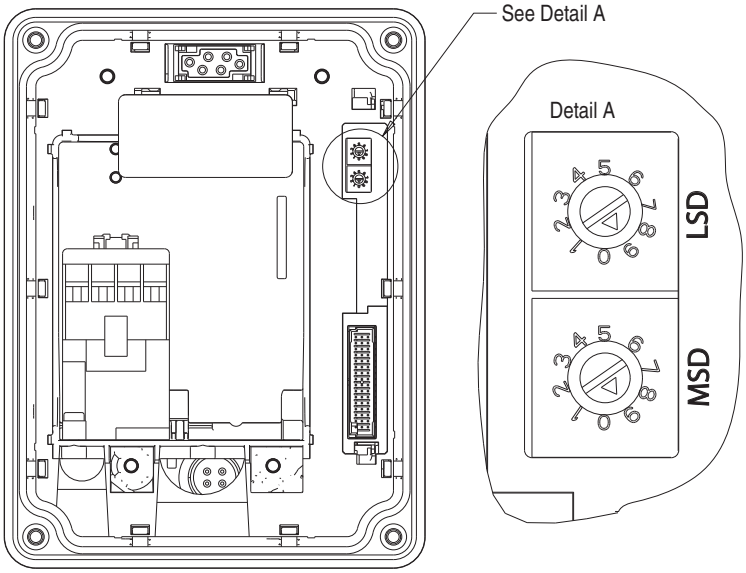

Node Commissioning using Software

To set the node address of the ArmorStart using software or other handheld tools, leave the hardware switches in there default position (99) or insure that they are set to something greater than (63). With the hardware switches set, use the software or handheld tool to change the address.

To begin the configuration of ArmorStart using software, execute the RSNetWorx software and complete the following procedure. You must use RSNetWorx Revision 3.21 Service Pack 2 or later.

1. Go on-line using RSNetWorx for DeviceNet. This can be accomplished by selecting the Network menu, and then choosing Online.
2. Choose the appropriate DeviceNet PC interface. In this example, a **1784-PCIDS** module is chosen. Other common DeviceNet interfaces are the 1770-KFD, and 1784-PCD.

   Note: DeviceNet drivers must be configured using RSLinx before being available to RSNetWorx.
3. Click OK.
4. RSNetWorx notifies the user to upload or download devices before viewing configuration. Click OK.
5. RSNetWorx will now browse the network and display all of the nodes it has detected on the network. For some versions of RSNetWorx software the ArmorStart EDS files and icon may not be included and shows up as an "Unregistered Device". If the screen appears like the example below, continue with Building and Registering an EDS file.

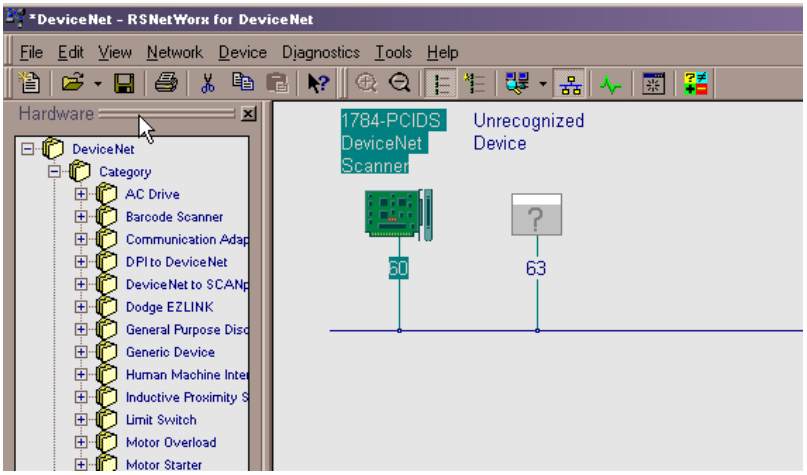

6. If RSNetWorx recognizes the device as an ArmorStart, skip ahead to the following section Changing the Node address (MAC ID)

Building and Registering an EDS File

The EDS file defines how RSNetWorx for DeviceNet communicates to the ArmorStart. Follow the steps below to build and register the EDS file.

To register a device, you must first obtain the EDS file from the following web page: ***http://www.ab.com/networks/eds***

After obtaining the files do the following:

1. Right mouse click the "Unrecognized Device" icon and choose Register Device from the menu.
2. Click Next. The following screen appears:

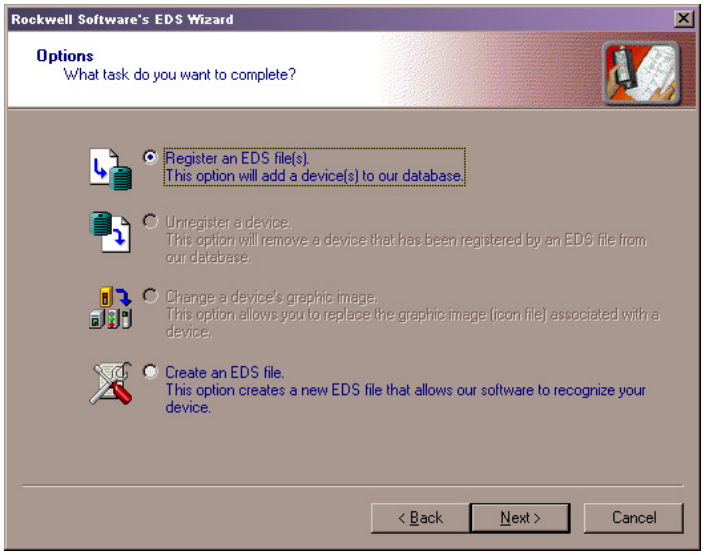

3. Choose Register an EDS file(s) as shown above and then click the Next button.
4. Choose to Register a single file and specify the file name or use the Browse button to locate the EDS file on your computer. If connected to the Internet you may use the Download EDS file button to automatically search for the correct EDS file.

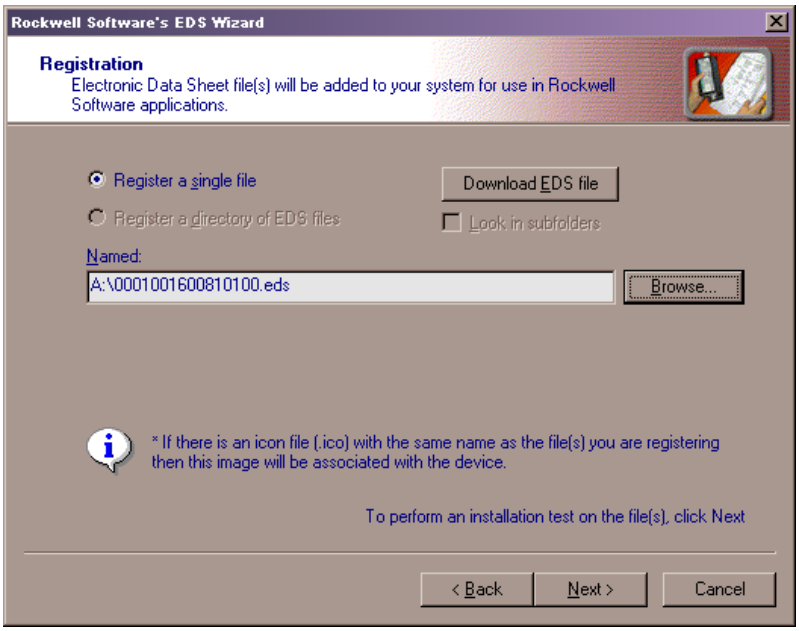

5. Click the Next button.
6. The following screen displays any warning or errors if a problem occurs while registering the file. If a problem occurs insure that you have the correct file and try again. Click the Next button when no errors occur.
7. Select an alternative icon by highlighting the new device and clicking Change Icon. Once you have selected an icon, click OK and then click the Next button.

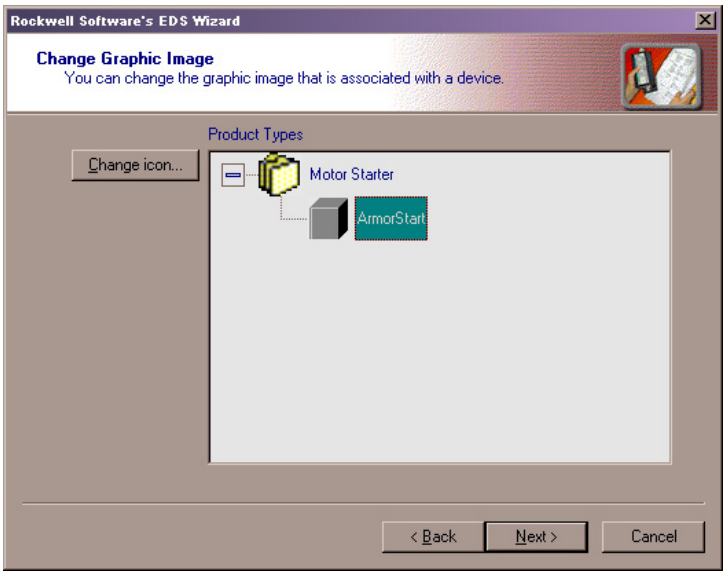

8. When asked if you would like to register this device, click the Next button.
9. Click the Finish button. After a short while RSNetWorx will update your online screen by replacing the unrecognized device with the name and icon given by the EDS file you have just registered.

Using the Node Commissioning Tool Inside RSNetWorx for DeviceNet

1. Choose Node Commissioning from the **Tools** menu at the top of the screen.
2. Click Browse... to prompt a screen similar to the one below to appear.

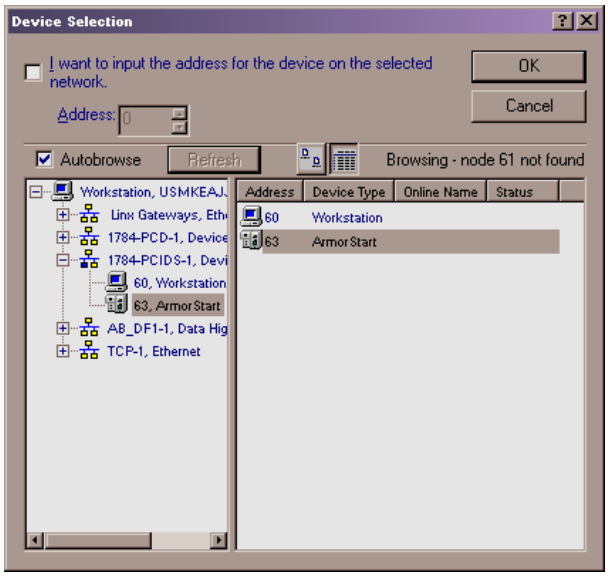

3. Select the ArmorStart at node 63, and then click OK. The node commissioning screen has the “Current Device Settings” entries completed. It will also provide the current network baud rate in the “New ArmorStart Settings” area. Do not change the baud rate unless you are certain that this value needs to be changed.

4. Enter the desired node address in the “New Device Settings” section. In this example, the new node address is **5**. Click Apply to apply the new node address.
5. When the new node address has been successfully applied, the “Current Device Settings” section of the window is updated as follows. If an error occurs, check to verify the device is properly powered up and connected to the network.

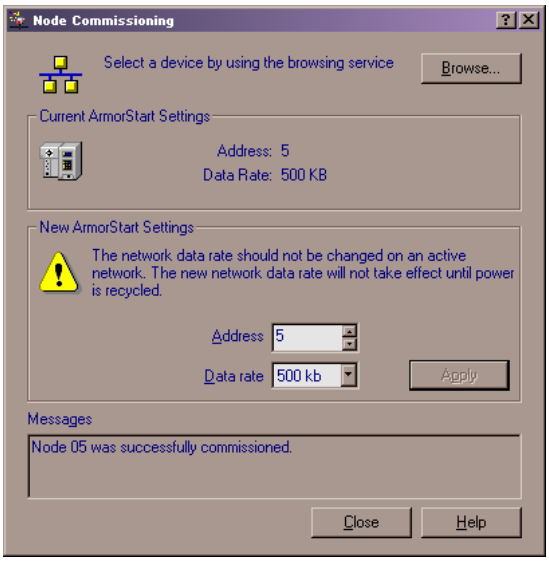

6. Click Close to exit the node commissioning tool.
7. Choose **Single Pass Browse** from the **Network** menu to update RSNetWorx and verify that the node address is set correctly.

System Configuration

Selection of produced and consumed I/O assemblies (sometimes referred to as input and output assemblies) define the format of I/O message data that is exchanged between the ArmorStart and other devices on the network. The consumed information is generally used to command the state of its outputs, and produced information typically contains the state of the inputs and the current fault status of the device.

The default consumed and produced assemblies are shown below; for additional formats refer to Appendix B. The ArmorStart default configuration varies depending on the type of starter.

Choosing the size and format of the I/O data that is exchanged by the ArmorStart is done by choosing a consumed assembly instance number. This instance number is written to the *Consumed IO Assy* parameter. The different instances/formats allow user programming flexibility and network optimization.

IMPORTANT The *Consumed and Produced IO Assy* parameter values can not be changed while the ArmorStart is online with a scanner. Any attempts to change the value of this parameter while online with a scanner results in the error message “Object State Conflict”.

Using Automap feature with default Input and Output (I/O) Assemblies

The Automap feature available in all Rockwell Automation scanners will automatically map the information as shown below. If manual mapping is not required, the information below can be used to map a device that is based on the default configuration.

Table 21 - Default Input and Output (I/O) Assemblies

	Default
Message type	Polled
Consumed data size	1 byte (Rx)
Produced data size	2 bytes (Tx)

Default Input and Output (I/O) Assembly Formats

The I/O assembly format for the ArmorStart is identified by the value in parameter 11 (Consumed IO Assy.) and parameter 12 (Produced IO Assy.). These values determine the amount and arrangement of the information communicated to the master scanner. The tables below identify the default information that is produced and consumed by the standard starter. For additional formats and advance configurations please reference Table 60 on page 298.

Table 22 - Instance 160 — Default Consumed Data for Standard Distributed Motor Controller (1 byte)

Byte	Bit 7	Bit 6	Bit 5	Bit 4	Bit 3	Bit 2	Bit 1	Bit 0
0	User Out B	User Out A	Not Used	Not Used	Not Used	Fault Reset	Run Rev	Run Fwd

Table 23 - Instance 161 — Default Produced Data for Standard Distributed Motor Controller (2 bytes)

Byte	Bit 7	Bit 6	Bit 5	Bit 4	Bit 3	Bit 2	Bit 1	Bit 0
0	Not Used	Not Used	Not Used	Ready	Running Rev	Running Fwd	Warning	Tripped
1	Not Used	Not Used	140M On	HOA Status	User In 3	User In 2	User In 1	User In 0

Setting the Motor FLA and Overload Trip Class (Bulletin 280, 281)

The product should now be configured and communicating on the network. The last step is to program the motor FLA setting (parameter# 106) and overload trip class (parameter# 107). This can be accomplished by using software such as RSNetWorx for DeviceNet or another handheld DeviceNet tool.

Using the software, access the device parameters screen as shown below. Notice that by default the motor FLA is set to the minimum FLA setting for the device and the overload trip class is set to 10.

Select **FLA setting** (parameter #106) and enter a value that corresponds to the FLA of the motor that is connected to the ArmorStart. Verify the Single radio button is selected and then select Download to Device.

Select **Overload Class** (parameter #107) and choose the overload trip class to be used with the motor that is connected to the ArmorStart. The ArmorStart can be set up for trip class 10, 15, or 20. Verify the Single radio button is selected and then select Download to Device.

The proper motor protection is now in place.

Figure 50 - RSNetWorx Parameter Screen

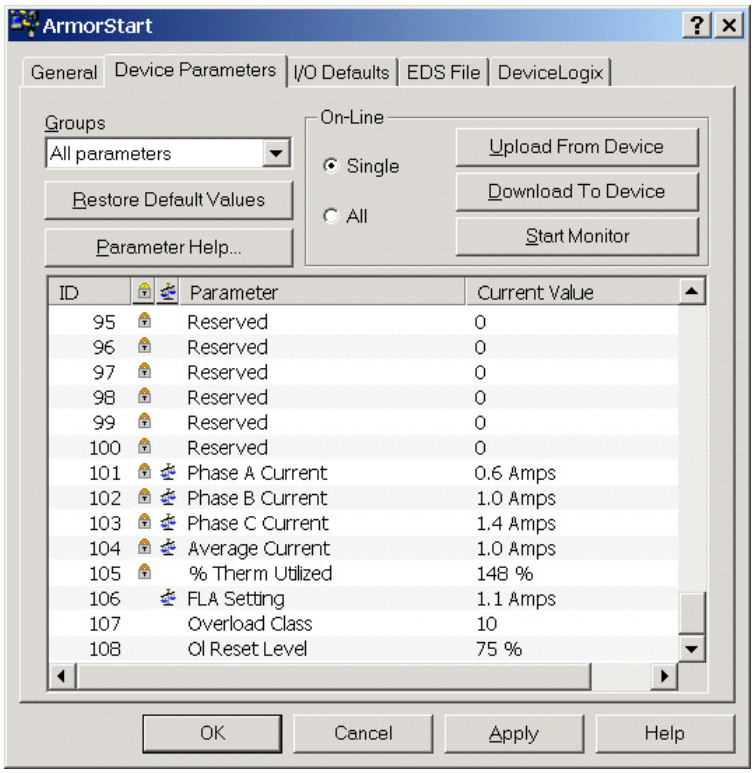

Setting the Motor FLA (Bulletin 284)

The product should now be configured and communicating on the network. The last step is to program the proper motor OL current setting (Parameter 133). This can be accomplished by using software such as RSNetWorx for DeviceNet or a handheld DeviceNet tool.

Use the software to access the device parameters screen. By default the motor OL current is set to the minimum motor OL current setting for the device. Set this parameter to the desired value and download to the device.

Select Motor OL Current (Parameter 133) and enter a value that corresponds to the FLA of the motor connected to the ArmorStart. Verify the Single radio button is selected and then select Download to Device.

The proper motor protection is now in place.

Figure 51 - RSNetWorx Parameter Screen

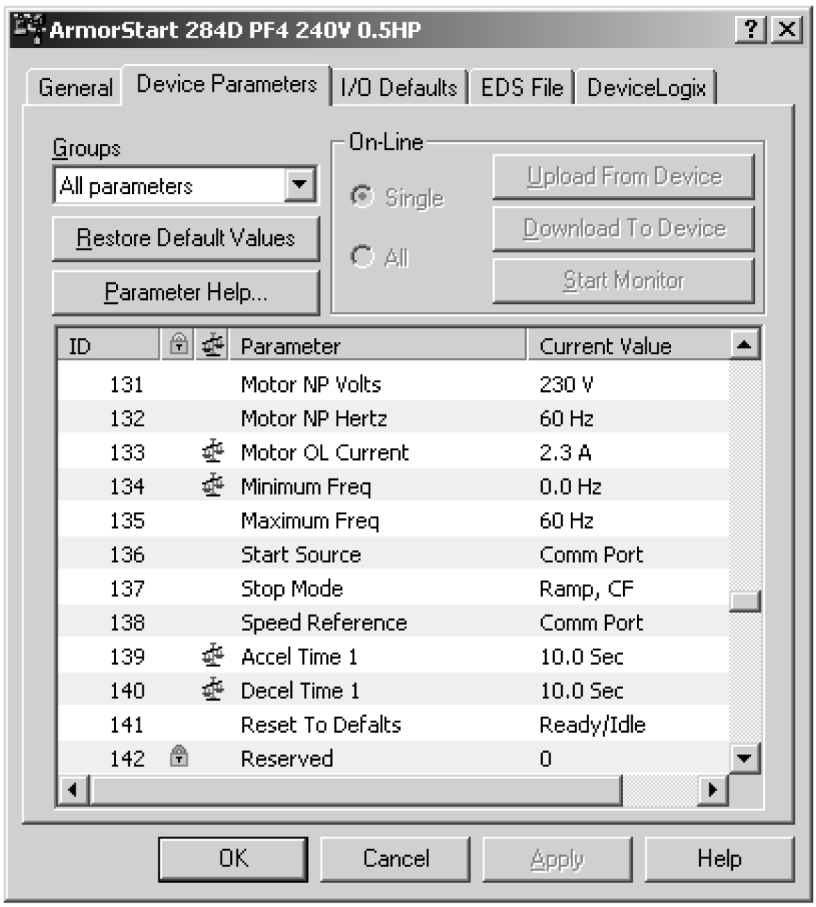

Notes:

Explicit Messaging on DeviceNet

Logic Controller Application Example with Explicit Messaging

This chapter is designed to demonstrate programming and explicit message examples for both the SLC™ family of programmable controllers and ControlLogix® family of programmable controllers. The examples shows how to develop a program for simple control and use a simple explicit message to retrieve data that is not automatically acquired based on the input and output assembly of the device. The user of the device can use this example as a guide in developing, their own programs.

Below is the RSNetWorx view of the simple network that is used In this example,.

Figure 52 - Simple Network

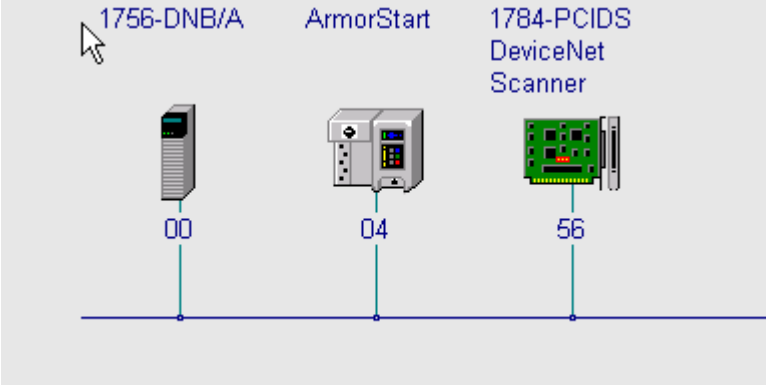

To assist in the development of the example the network consists only of the ArmorStart and scanner. Therefore the only mapped information in the scanner is the ArmorStart. See to *Chapter 7, DeviceNet Commissioning* for assistance in mapping.

Programming the 1747-SLC

I/O Mapping

The following example uses the standard distributed motor controller and the factory default input and output assembly of 160 and 161. See *Appendix B, Bulletin 280, 281 CIP Information* for additional assembly formats. The default input and output assemblies are shown in the table below with the corresponding data size.

Table 24 - Message Type (I/O Assembly)

	Data Size (bytes)
Instance 160 – Consumed (output)	1 (Rx)
Instance 161 – Produced (input)	2 (Tx)

If a different I/O assembly is selected, the data size may change. It is important to understand that the I/O assembly selected here will directly affect the input and output mapping in the scanner's scanlist and the amount of Programmable Logic Controller (PLC) memory that is reserved for this information.

Table 25 - Example SLC Input Addressing (Produced Assembly)

Instance 161 Default Produced Standard Distributed Motor Controller								
Byte 0	**Bit 7**	**Bit 6**	**Bit 5**	**Bit 4**	**Bit 3**	**Bit 2**	**Bit 1**	**Bit 0**
Address	I:1.23	I:1.22	I:1.21	I:1.20	I:1.19	I:1.18	I:1.17	I:1.16
Data	reserved	Reserved	reserved	Ready	Running Rev	Running Fwd	Warning	Tripped
Byte 1	Bit 15	Bit 14	Bit 13	Bit 12	Bit 11	Bit 10	Bit 9	Bit 8
Address	I:1.31	I:1.30	I:1.29	I:1.28	I:1.27	I:1.26	I:1.25	I:1.24
Data	reserved	Reserved	140M On	HOA	User In 3	User In 2	User In 1	User In 0

Table 26 - Example SLC Output Addressing (Consumed Assembly)

Instance 160 Default Consumed Standard Distributed Motor Controller								
Byte	**Bit 7**	**Bit 6**	**Bit 5**	**Bit 4**	**Bit 3**	**Bit 2**	**Bit 1**	**Bit 0**
Address	0:1.23	0:1.22	0:1.21	0:1.20	0:1.19	0:1.18	0:1.17	0:1.16
Data	User Out B	User Out A	reserved	reserved	reserved	Fault Reset	Run Rev	Run Fwd

The example PLC program for the SLC uses the "Tripped" and the "140M On" bit from the produced assembly and the "Fault Reset", "User Out A", and "Run Fwd" bit from the consumed assembly.

Explicit Messaging with SLC

The 1747-SDN module uses the M0 and M1 file areas for data transfer. Only words 224 through 256 are used to execute the Explicit Message Request and Response function. The minimum data size for the explicit message request is 6 words and the maximum is 32 words. The following tables illustrate the standard format of the explicit message request and response.

Table 27 - Explicit Message Request (Get_Attribute_Single)

Bit location within Word		
15 … 8	7 … 0	
TXID	COMMAND	Word - 0
PORT	SIZE	Word - 1
SERVICE	MAC ID	Word - 2
CLASS		Word - 3
INSTANCE		Word - 4
ATTRIBUTE		Word - 5

Table 28 - Explicit Message Response (Get_Attribute_Single)

Bit location within Word		
15 … 8	7 … 0	
TXID	STATUS	Word - 0
PORT	SIZE	Word - 1
SERVICE	MAC ID	Word - 2
DATA		Word - 3

- **Transmission ID (TXID)**:
  The scanner uses this value to track the transaction to completion, and returns the value with the response that matches the request that is downloaded by the SLC 500 processor. The TXID data size is one byte.
- **Command:**
  This code instructs the scanner how to administer the request. A listing of these codes can be found in the 1747-SDN User Manual, Publication 1747-5.8. The Command data size is one byte.
- **Status:**
  The Status code provides the communication module's status and its response.
- **Port:**
  The physical channel of the scanner where the transaction is to be routed. The port setting can be zero (channel A) or one (channel B). The Port data size is one byte. Note that the 1747-SDN has only one channel, and so this value is always set to zero.
- **Size:**
  This identifies the size of the transaction body in bytes. The transaction body begins at word 3. The maximum size is 58 bytes. The Size data size is one byte.
- **Service:**
  This code specifies the type of request being delivered. The Service data size is one byte.

- **MAC ID:**
  The DeviceNet™ network node address of the device for which the transaction is intended is identified here. The slave device must be listed in the scanner module's scan list and be on-line for the explicit message transaction to be completed.
- **Class:**
  The desired DeviceNet class is specified here.
- **Instance:**
  This code identifies the specific instance within the object class towards which the transaction is directed. The value zero is reserved to denote that the transaction is directed towards the class itself versus a specific instance within the class.
- **Attribute:**
  This code identifies the specific characteristic of the object towards which the transaction is directed. The attribute data size is one word.

Setting up the Data File

The following table lists the most common transaction types (get information and set information), and the appropriate service, class, instance, and attribute that corresponds to the type.

Table 29 - Common Configuration Examples for ArmorStart

Transaction Type	Service ①	Class ①	Instance ①	Attribute ①
Get_Attribute_Single	0x0E	0x0F	Par. # ②	1 ③
Set_Attribute_Single	0x10	0x0F	Par. # ②	1 ③

① The numeric values are in a hexadecimal format.
② This is the actual parameter number.
③ The code "1" specifies the value of the instance (parameter).

Sequence of Events

Use the following sequence of events as a guide for establishing explicit messages in your SLC ladder logic.

1. Put the explicit message request data into an integer (N) file of the SLC 500 processor.
2. Use the file copy instruction (COP) to copy the explicit message request data that was entered in step 1 to the M0 File, words 224...256.
3. Use the examine-if-closed instruction (XIC) to monitor bit 15 of the scanner's module status register for an indication that it has received a response from the ArmorStart.
4. Copy the data from the M1 file, words 224...256, into a file in the SLC 500 processor using the file copy instruction (COP).

The following example shows the exact data format to perform a "Get Attribute Single" request. This message will specifically access parameter 104, *Average Current*. The first three words are shown segmented into two bytes, corresponding to the upper and lower bytes shown in the explicit message request table (Table 27 -).

Note: The data in the table is shown in a hexadecimal format. Therefore *parameter 104 decimal* is equal to *68 hexadecimal* (0x68).

Table 30 - Get_Attribute_Single Request

	TXID	Command	Port	Size	Service	MAC ID	Class	Instance	Attribute		
Word	0		1		2		3	4	5	6	7
N7:x	01	01	00	06	0E	04	000F	0068	0001	—	—

Table 31 - Get_Attribute_Single Response

	TXID	Status	Port	Size	Service	MAC ID	Data				
Word	10		11		12		13	14	15	16	17
N7:x	01	xx	00	06	0E	04	x	—	—	—	—

Figure 53 - SLC Example of Ladder Logic Program

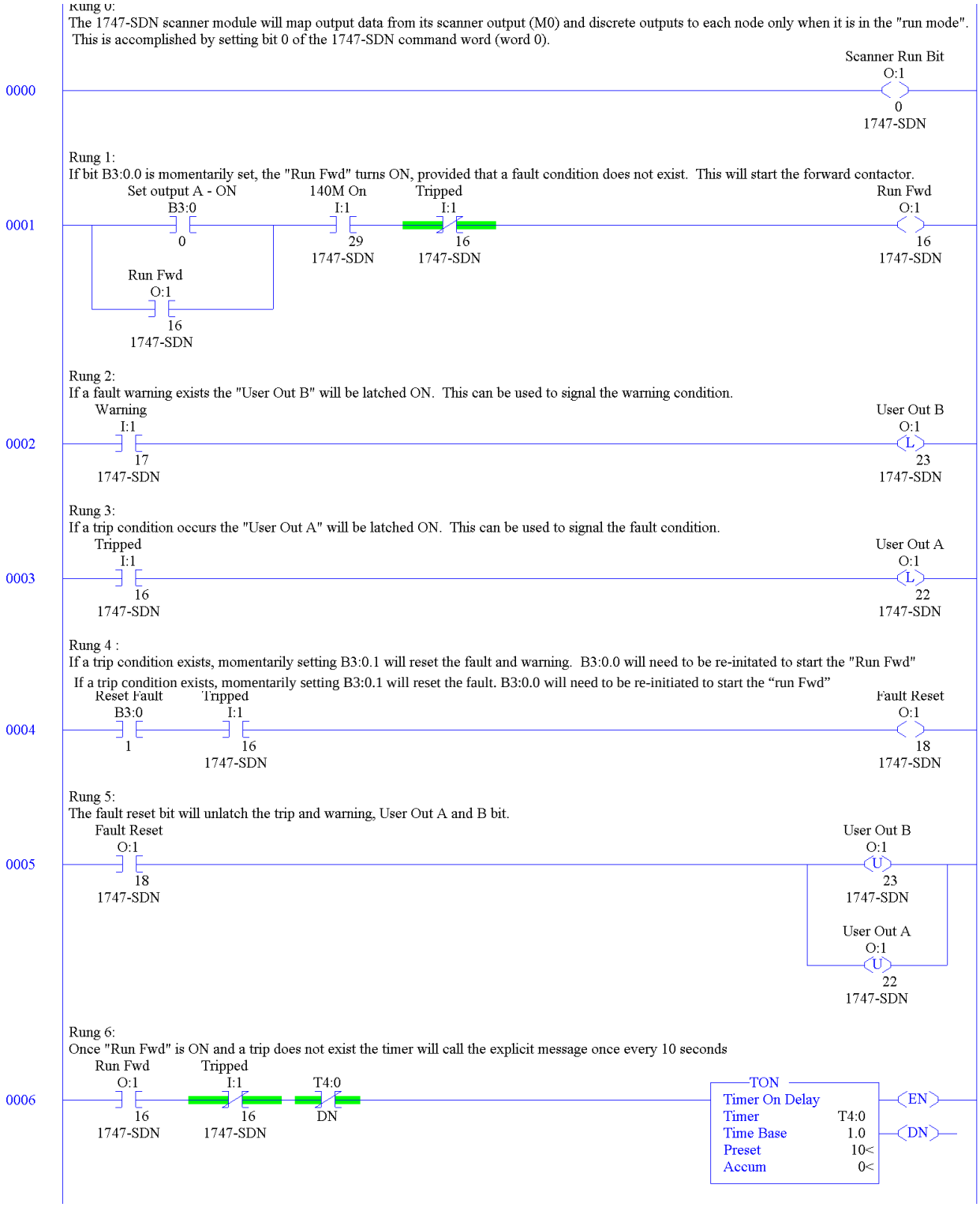

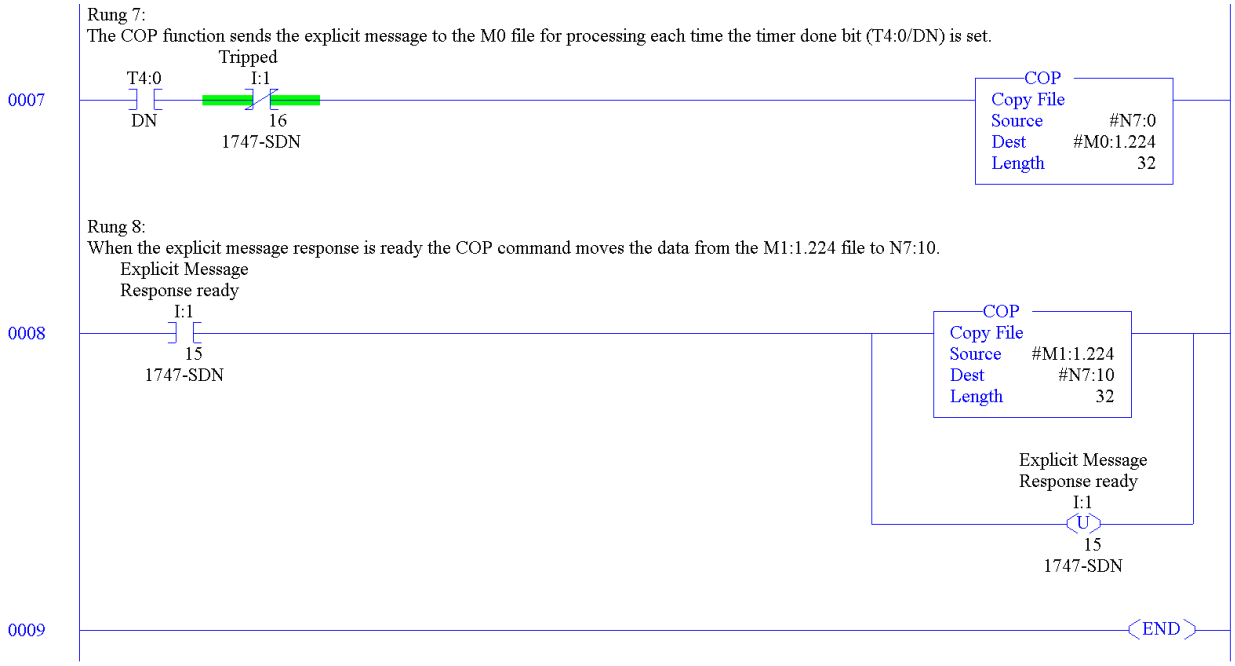
Rung 7:
The COP function sends the explicit message to the M0 file for processing each time the timer done bit (T4:0/DN) is set.
0007
T4:0
DN
Tripped
I:1
16
1747-SDN
COP
Copy File
Source #N7:0
Dest #M0:1.224
Length 32
Rung 8:
When the explicit message response is ready the COP command moves the data from the M1:1.224 file to N7:10.
0008
Explicit Message
Response ready
I:1
15
1747-SDN
COP
Copy File
Source #M1:1.224
Dest #N7:10
Length 32
Explicit Message
Response ready
I:1
U
15
1747-SDN
0009
END

Programming the 1756-ControlLogix

I/O Mapping

The following example uses the standard distributed motor controller and the factory default input and output assembly of 160 and 161. See *Appendix B, Bulletin 280, 281 CIP Information* for additional assembly formats. The default input and output assembly will again be used in the following example.

> **Note:** The addressing is different between the SLC 1747 and ControlLogix 1756 program. It is important that the user understand how to create and use "tags" to properly follow the example. See the RSLogix™ 5000 programming manual for additional help with defining tags.

The tables below list the data configuration for the ControlLogix platform and include the tag name as used in the example program.

Table 32 - Example ControlLogix Input Addressing (Produced Assembly)

Instance 161 Default Produced Standard Distributed Motor Controller								
Byte 0	**Bit 7**	**Bit 6**	**Bit 5**	**Bit 4**	**Bit 3**	**Bit 2**	**Bit 1**	**Bit 0**
Address	Local:1:I. Data[1].7	Local:1:I. Data[1].6	Local:1:I. Data[1].5	Local:1:I. Data[1].4	Local:1:I. Data[1].3	Local:1:I. Data[1].2	Local:1:I. Data[1].1	Local:1:I. Data[1].0
Tag Name	—	—	—	—	—	—	Status_ warning	Status_ tripped
Data	reserved	reserved	reserved	Ready	Running Rev	Running Fwd	Warning	Tripped
Byte 1	Bit 15	Bit 14	Bit 13	Bit 12	Bit 11	Bit 10	Bit 9	Bit 8
Address	Local:1:I. Data[1].15	Local:1:I. Data[1].14	Local:1:I. Data[1].13	Local:1:I. Data[1].12	Local:1:I. Data[1].11	Local:1:I. Data[1].10	Local:1:I. Data[1].9	Local:1:I. Data[1].8
Tag Name	—	—	Status_140M	—	—	—	—	—
Data	reserved	reserved	140M On	HOA	User In 3	User In 2	User In 1	User In 0

Table 33 - Example ControlLogix Output Address (Consumed Assembly)

Instance 160 Default Consumed Standard Distributed Motor Controller								
Byte 0	**Bit 7**	**Bit 6**	**Bit 5**	**Bit 4**	**Bit 3**	**Bit 2**	**Bit 1**	**Bit 0**
Address	Local:1:0. Data[1].7	Local:1:0. Data[1].6	Local:1:0. Data[1].5	Local:1:0. Data[1].4	Local:1:0. Data[1].3	Local:1:0. Data[1].2	Local:1:0. Data[1].1	Local:1:0. Data[1].0
Tag Name	Control_OutB	Control_Out A	—	—	—	Control_fault Reset	—	—
Data	User Out B	User Out A	reserved	reserved	reserved	Fault Reset	Run Rev	Run Fwd

Explicit Messaging with ControlLogix

The ControlLogix platform requires significantly less structure to initiate an explicit message. The explicit message Request and Response is configured within the **MSG** function. The **MSG** function can be found in the Input/Output tab of RSLogix 5000. Notice that in the ControlLogix program example, rung 6 is the only required logic to complete the explicit message request.

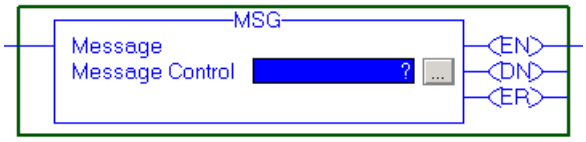

Setting Up the MSG Instruction

A tag name must be given to the MSG function before the rest of the information can be defined. In this example,, a tag was created with the name ***explicit_mess***. After the instruction has been named, click the gray box ... to define the rest of the instruction.

The following example shows the exact data format to perform a Get Attribute Single request. This message will specifically access parameter 104, *Average Current*. See Table 29 on page 210 for additional configurations.

Figure 54 - Message Configuration

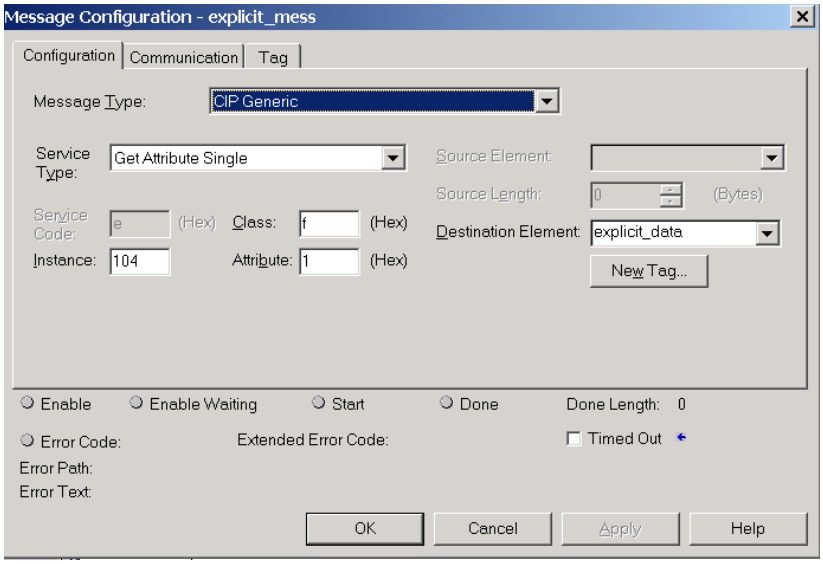

- **Message Type:**
  Select CIP Generic from pull-down menu to configure an explicit message.
- **Destination Element:**
  This is the tag name of the location you are going to place the response information. In this example,, a tag was created with the name explicit_data.

- **Service Type:**
  The pull-down menu has several options, however only the Get Attribute Single is used for this example.

  The Class, Instance, and Attribute define the actual information being requested. Additional configurations of these parameters can be found in Appendix B.
- **Class:**
  In this example,, the value is “F”
- **Instance:**
  In this example,, the value is “104”
- **Attribute:**
  In this example, the value is “1”

  After the above information has been entered, click the communication tab.
- **Path:**
  The path defines the route that the message takes to get to the device it is intended for. In this example, the path is Scanner,2,4; where scanner is the name of the 1756-DNB in the rack, 2 represents the DeviceNet port, and 4 represents the physical node address of the ArmorStart.

Figure 55 - Scanner Path

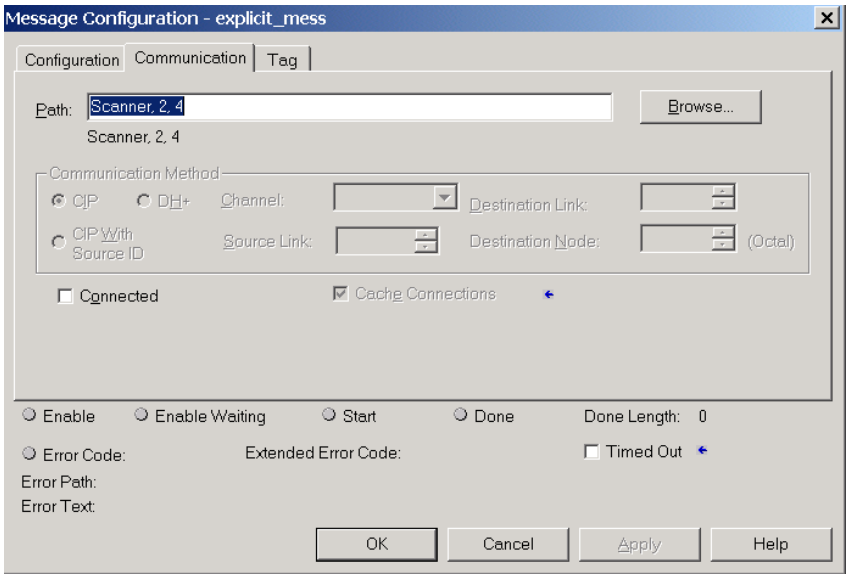

Figure 56 - ControlLogix Example of Ladder Logic Program

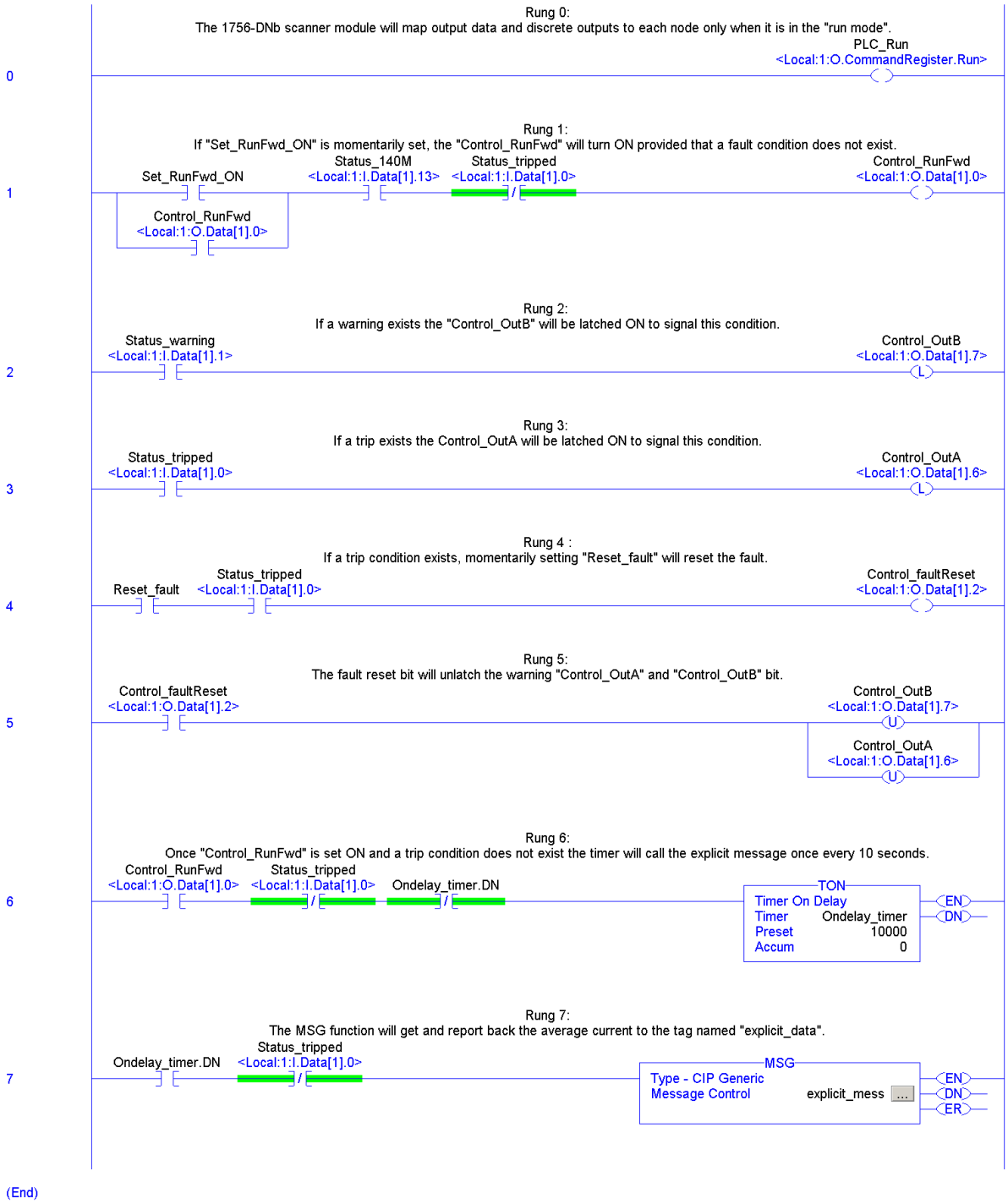

Notes:

Using DeviceLogix

Description

The DeviceLogix system is a standalone Boolean program that resides within the ArmorStart distributed motor controller. The program is embedded in the product software so that there is no additional module that is required to use this technology; RSNetWorx [noun] for the DeviceNet network are required to program the device.

In addition to the actual programming, DeviceLogix can be configured to operate under specific situations. It is important to note that the DeviceLogix program only runs if the logic has been enabled. This can be done within the "Logic Editor" of RSNetWorx. The operation configuration is accomplished by setting the "Network Override" and "Communication Override" parameter. The following information describes the varying levels of operation:

- If both overrides are disabled and the logic is enabled, the ONLY time DeviceLogix runs is if there is an active I/O connection with a master, i.e. the master is in Run mode. At all other times DeviceLogix is running the logic, but does NOT control the state of the outputs.
- If the Network Override is enabled and the logic is enabled, then DeviceLogix controls the state of the outputs when the PLC is in Run mode and if a network fault such as Duplicate MAC ID or Module Bus off condition occurs.
- If the Communications Override is enabled and the logic is enabled, the device does not need any I/O connection to run the logic. As long as there is control power and a DeviceNet power source that is connected to the device, the logic controls the state of the outputs.
- DeviceLogix provides a "Motion Disable" function that is driven from the DeviceLogix program. When this is active all motor run commands are disabled, including the HOA. The run command is disabled regardless of where the command is initiated from such as DeviceLogix or DeviceNet.

DeviceLogix Programming

DeviceLogix has many applications and the implementation is typically only limited to the imagination of the programmer. Keep in mind that the application of DeviceLogix is only designed to handle simple logic routines.

DeviceLogix is programmed using simple Boolean math operators such as AND, OR, NOT, timers, counters, and latches. Decision making is done by combining these Boolean operations with any of the available I/O. The inputs and outputs used to interface with the logic can come from the network or from the device hardware. Hardware I/O is the physical inputs and outputs that are on the device, such as push buttons and pilot lights that are connected to the ArmorStart.

There are many reasons to use the DeviceLogix functionality, but some of the most common are listed below:

- Increased system reliability
- Fast update times (1...2 ms possible)
- Improved diagnostics and reduced troubleshooting
- Operation independent of PLC or Network status
- Continue to run process in the event of network interruptions
- Critical operations can be safely shut down through local logic

DeviceLogix Function Block Editor Example

The following example shows how to program a simple logic routine to interface the ArmorStart with a remote hard-wired start-stop station. In this case, the I/O is wired as shown in the table.

Table 34 - Hardware Bit Assignments and Description for the ArmorStart

Input Table		Output Table	
Bit	**Description**	**Bit**	**Description**
Input 0	Start Button	Run Fwd	Contactor Coil
Input 1	Stop Button	N/A	N/A
Input 2	N/A	—	—
Input 3	N/A	—	—

IMPORTANT Before programming logic, it is important to decide on the conditions under which the logic will run. As defined earlier, the conditions can be defined by setting parameter 8 (Network Override) and parameter 9 (Comm. Override) to the desired value.

1. While in RSNetWorx for DeviceNet, Double-click ArmorStart.
2. Click the DeviceLogix tab. If you are on-line with a device, a dialog box appears, asking you to upload or download. Click Upload.
3. Click the Start Logic Editor button.
4. If programming off-line continue to step 5, otherwise click the Edit button. Click Yes when asked if you want to Enter Edit Mode. Once in edit mode the entire list of Function Blocks is displayed in the toolbar.

5. Left Click the RSL function block. This is a reset dominate latch.
6. Move the cursor into the grid, and left click to drop the function onto the grid.
7. From the toolbar, Click the Discrete Input button and choose Input 0 from the pull-down menu. This is the remote start button based on the example I/O table.
8. Place the input to the left of the RSL function. To drop the input on the page, left-click on the desired position.
9. Place the mouse cursor over the tip of Input 0. The tip turns green. Click the tip when it turns green.
10. Move the mouse cursor toward the input of the RSL function. A line follows the cursor. When a connection can be made, the tip of the RSL function also turns green. Click the Input and the line is drawn from Input 0 to the Set Input of the RSL function.

    Note: If this was not a valid connection, one of the pin tips would have turned red rather than green. Double-click on the unused portion of the grid or press the Esc key at any time to cancel the connection process.

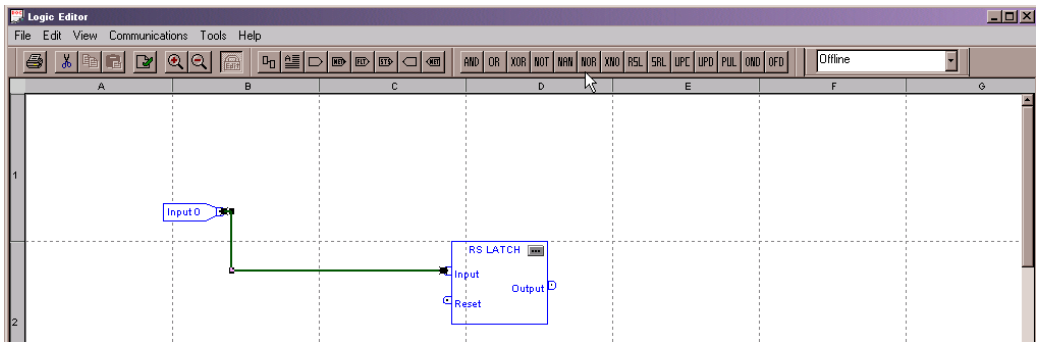

11. From the toolbar, click the Discrete Input button and choose Input 1 from the pull-down menu. This is the remote stop button based on the example I/O table.
12. Place the input to the left of the RSL function.
13. Connect the input to the reset input of the RSL latch.

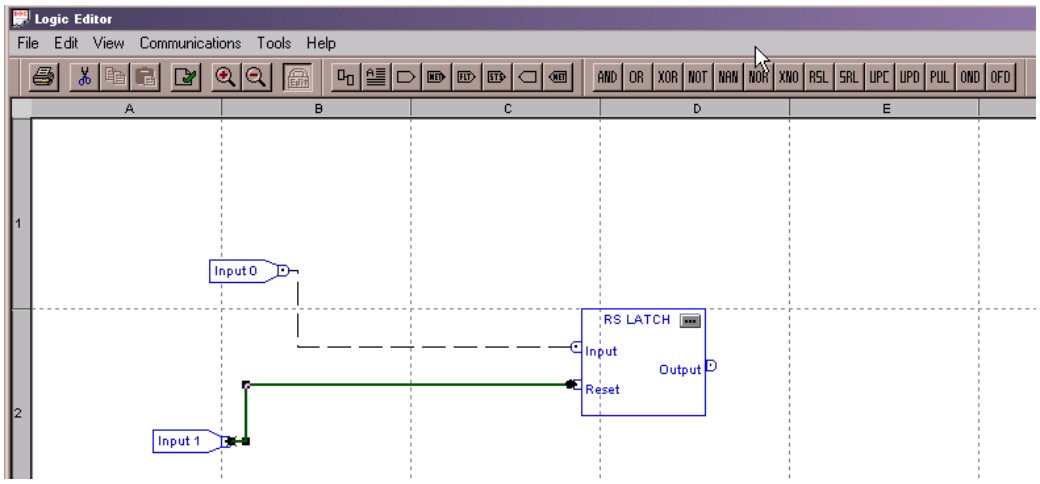

14. From the toolbar, click the Discrete Output button and choose Run Fwd from the pull-down menu. Run Fwd is the relay controlling the coil of the contactor. Click OK.
15. Move the cursor into the grid and place the Output to the right of the RSL function block.
16. Connect the output of the RSL function block to Run Fwd.

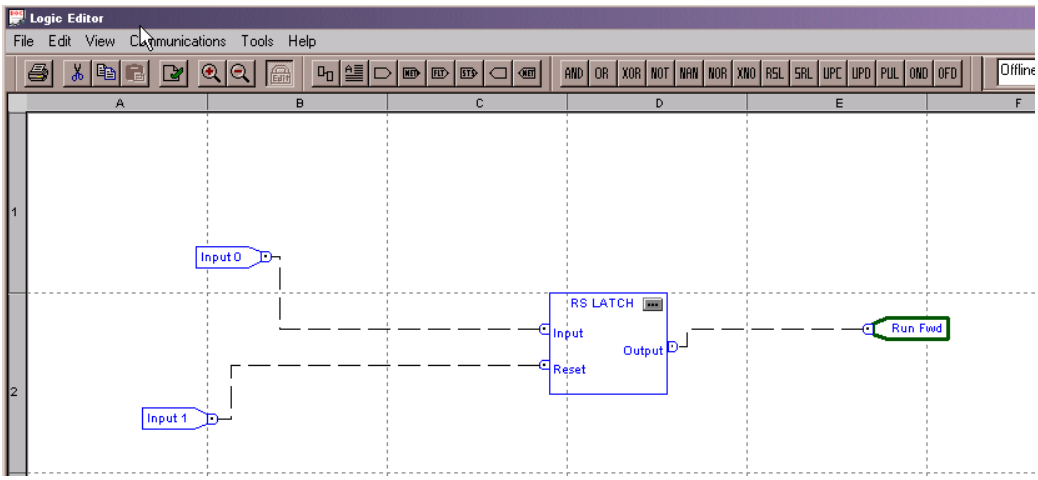

17. Click the Verify button located in the toolbar or choose Logic Verify from the Tools pull-down menu.
18. Click the Edit button to toggle out of edit mode if online with a device.
19. Go to the pull-down menu in the right corner of the toolbar and choose Download.

    Note: Verify that the PLC key switch is in the Program position. If in any other position, the download does not occur and an error is generated.
20. Click OK when told the download was successful.
21. Now from the same pull-down menu choose Logic Enable On.
22. The ArmorStart is now programmed and the logic is Active.

ArmorStart Motion and Keypad Disable with DeviceLogix

HOA operation can be prevented dynamically without parameter modification, as follows:

The DeviceLogix program shown below turns off the keypad if both inputs are true and the keypad is in either “OFF” or “AUTO” mode.

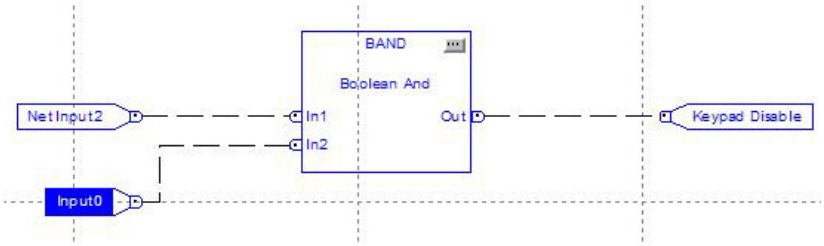

Note: If the user is already pressing the “HAND” button, the program does not disable the keypad; if the inputs are on after the “HAND” mode is actuated.

The motion disable program disables the command to run regardless of the HOA status, PLC control, or DeviceLogix. Once motion disable is turned off, the ArmorStart or PLC resumes control of the motor again. The motion disable does not disable the HOA keypad. The keypad operation appears normal but it does not control the run command until the motion disable is off.

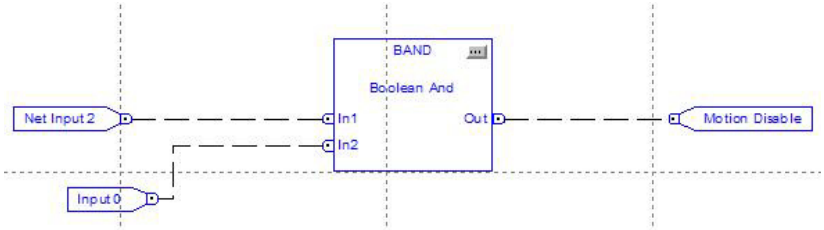

DeviceLogix Ladder Editor Example

ArmorStart EtherNet/IP supports DeviceLogix in a ladder programming environment. When using the ladder editor additional explanation is needed with regard to naming conventions. Fault bits such as “Overload Trip” are tagged “FB0, FB1, FB2, etc. Status bits such as “Running Fwd” are tagged SB0, SB1, SB2, etc. Outputs such as “Run Reverse” are tagged DOP0, DOP1 etc. Produced Network Bits such as “Fault Reset” are tagged PNB0, PNB1, etc. This document helps users interpret the naming conventions.

ArmorStart 280 and 281 Status Bits

The screen capture below shows how to choose status bits in the ladder editor.

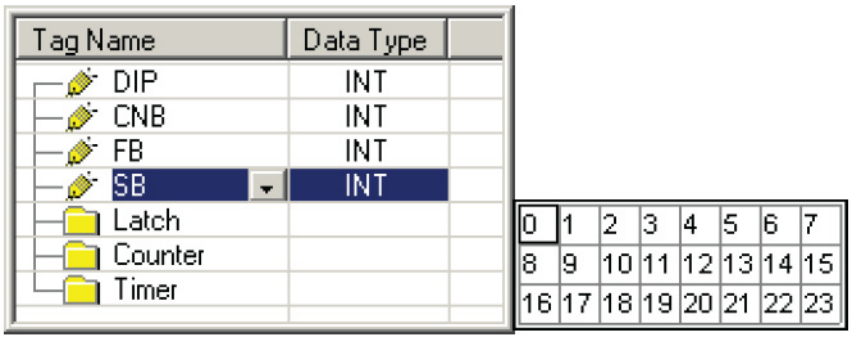

The following table contains the status bit definitions for ArmorStart 280D and 281D units:

Status Bit Declaration
0 = Tripped
1 = Running Fwd
2 = Running Rev
3 = Ready
4 = Net Ctl Status
5 = At Reference
6 = Keypad Hand
7 = HOA Status
8 = 140M On
9 = Explicit Msg Cnxn Exists
10 = IO Cnxn Exists
11 = Explicit Cnxn Fault
12 = IO Cnxn Fault
13 = IO Cnxn Idle
14 = Current Flowing
15 = Keypad Hand Direction

Bulletin 280 and 281 ArmorStart Fault Bits

The screen capture below shows how to choose fault bits in the ladder editor.

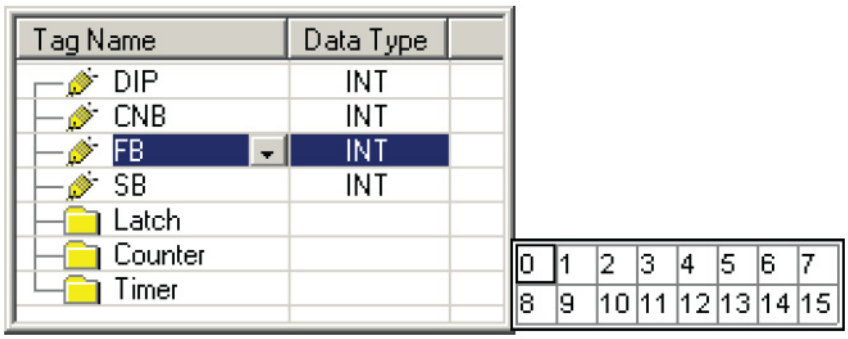

The following table contains the fault bit definitions for Bulletin 280D and 281D ArmorStart units:

Fault Bit Declaration
0 = Short Circuit
1 = Overload
2 = Phase Loss
3 = Control Power
4 = IO Fault
5 = Over Temp
6 = Phase Imbalance
7 = DNet Power Loss
8 = EEprom
9 = HW Flt
10 = PL Warning
11 = CP Warning
12 = IO Warning
13 = Phase Imbal Warn
14 = DN Warning
15 = HW Warning

Bulletin 280 and 281 ArmorStart Outputs

The screen capture below shows how to choose outputs in the ladder editor.

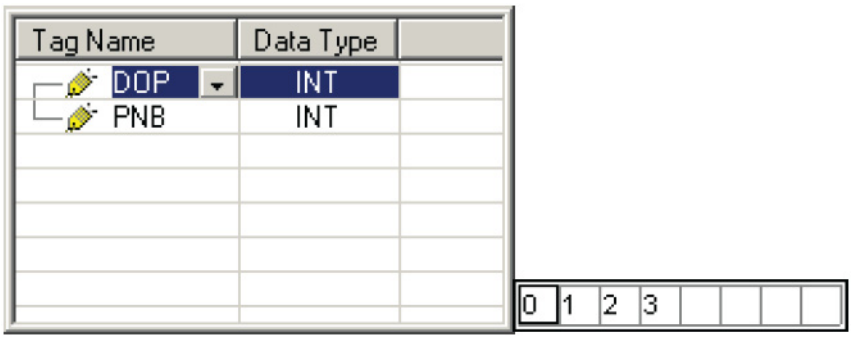

The Bulletin 280 and 281 have the following bit definitions:

0 = Run Forward
1 = Run Reverse
2 = User Output A
3 = User Output B

Bulletin 280 and 281 ArmorStart Produced Network Bits

The screen capture below shows how to choose Produced Network Bits in the ladder editor.

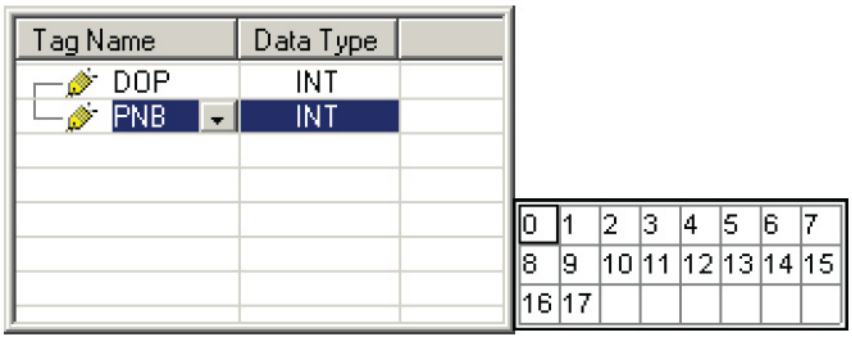

The following table contains the produced network bit definitions for Bulletin 280 and 281 ArmorStart units

Produce Network bit declaration
0 = Net Output 0
1 = Net Output 1
2 = Net Output 2
3 = Net Output 3
4 = Net Output 4
5 = Net Output 5
6 = Net Output 6
7 = Net Output 7
8 = Net Output 8
9 = Net Output 9
10 = Net Output 10
11 = Net Output 11
12 = Net Output 12
13 = Net Output 13
14 = Net Output 14
15 = Fault Reset
16 = Motion Disable
17 = Keypad Disable

Bulletin 284 ArmorStart Status Bits

The following table contains the status bit definitions for ArmorStart 284

Status bit declaration
0 = Tripped
1 = Warning
2 = Running Fwd
3 = Running Rev
4 = Ready
5 = Net Ctl Status
6 = Net Ref Status
7 = At Reference
8 = Drive Opto 1
9 = Drive Opto 2
10 = Keypad Jog
11= Keypad Hand
12 = HOA Status
13 = 140M On
14 = Contactor 1
15 = Contactor 2
16 = Explicit Msg Cnxn Exists
17 = IO Cnxn Exists
18 = Explicit Cnxn Fault
19 = IO Cnxn Fau
20 = IO Cnxn Idle
21 = Keypad Hand Direction

Bulletin 284 ArmorStart Fault Bits

The screen capture below shows how to choose Fault Bits in the ladder editor.

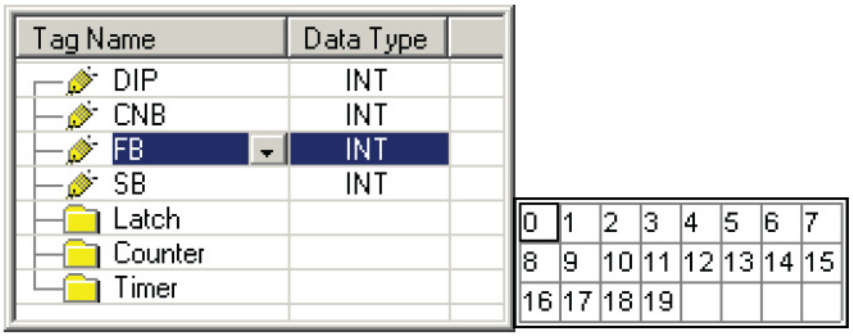

The following table contains the fault bit definitions for ArmorStart 284

Fault bit declaration
0 = Short Circuit
1 = Overload
2 = Phase Short
3 = Ground Fault
4 = Stall
5 = Control Power
6 = IO Fault
7 = Over Temp
8 = Phase Over Current
9 = DNet Power Loss
10 = Internal Comm
11 = DC Bus Fault
12 = EEprom
13 = HW Flt
14 = Reset Retries
15 = Misc. Fault
16 = CP Warning
17 = IO Warning
18 = DN Warning
19 = HW Warning

Bulletin 284 ArmorStart Outputs

The screen capture below shows how to choose outputs in the ladder editor.

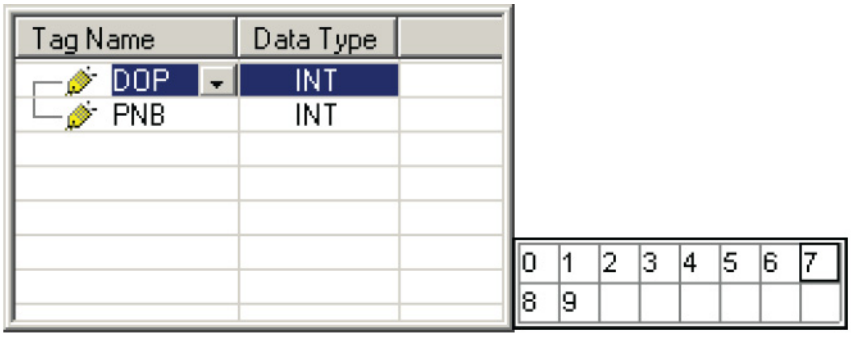

The Bulletin 284 bit definitions:

0 = Run Forward
1 = Run Reverse (Reserved)
2 = User Output A
3 = User Output B
4 = Drive Digital In 1
5 = Drive Digital In 2
6 = Drive Digital In 3
7 = Drive Digital In 4
8 = Jog Forward
9 = Jog Reverse

Bulletin 284 ArmorStart Produced Network Bits

The screen capture below shows how to choose Produced Network Bits in the ladder editor.

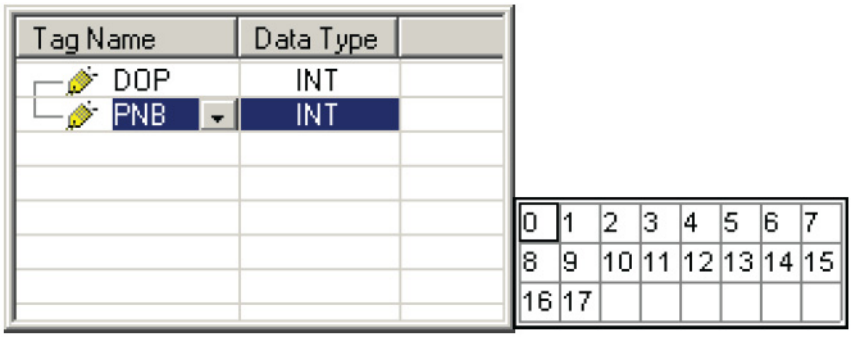

The following table contains the produced network bit definitions for Bulletin 284 ArmorStart units

Produce network bit declaration
0 = Net Output 0
1 = Net Output 1
2 = Net Output 2
3 = Net Output 3
4 = Net Output 4
5 = Net Output 5
6 = Net Output 6
7 = Net Output 7
8 = Net Output 8
9 = Net Output 9
10 = Net Output 10
11 = Net Output 11
12 = Net Output 12
13 = Net Output 13
14 = Net Output 14
15 = Fault Reset
16 = Accel 1
17 = Accel 2
18 = Decel 1
19 = Decel 2
20 = Freq Select 1
21 = Freq Select 2
22 = Freq Select 3
23 = Motion Disable
24 = Keypad Disable

Notes:

ArmorStart ZIP Configuration

Overview

This chapter describes the steps necessary to configure the Zone Interlocking Parameters (ZIP) to configure peer-to-peer communication between an ArmorStart and another ZIP enabled device such as another ArmorStart or a 1977-ZCIO module. First, an overview of the ZIP parameter set is presented. Then the steps necessary to enable peer-to-peer data production are described. Next, the steps necessary to enable peer-to-peer data consumption are described. Finally, the steps necessary to map the consumed peer-to-peer data to the DeviceLogix data table for use in local logic are described.

ZIP Parameter Overview

Each ArmorStart can consume ZIP data from up to four other devices. The four devices are referred to as "zones" of data and these zones are numbered from 1 to 4. The following parameters are used to configure a device for ZIP peer-to-peer communication:

Param #	Parameter Name	Parameter Description
67	AutoRun ZIP	Enables ZIP data production on power up 0=Disable; 1=Enable
68	Zone ProducedEPR	The Expected Packet Rate in msec. Defines the rate of at which ZIP data is produced. Defaults to 75 msec
69	Zone ProducedPIT	The Production Inhibit Time in msec. Defines the minimum time between Change of State data production
70	Zone #1 MacId	The node address of the device whose data is to be consumed for zone 1
71	Zone #2 MacId	The node address of the device whose data is to be consumed for zone 2
72	Zone #3 MacId	The node address of the device whose data is to be consumed for zone 3
73	Zone #4 MacId	The node address of the device whose data is to be consumed for zone 4
74	Zone #1 Health	Read Only consumed connection status for zone 1 0=Healthy; 1=Not Healthy
75	Zone #2 Health	Read Only consumed connection status for zone 2 0=Healthy; 1=Not Healthy
76	Zone #3 Health	Read Only consumed connection status for zone 3 0=Healthy; 1=Not Healthy
77	Zone #4 Health	Read Only consumed connection status for zone 4 0=Healthy; 1=Not Healthy
78	Zone #1 Mask	Bit enumerated consumed data mask for zone 1. Each bit represents a byte in consumed data up to 8 bytes in length. If a mask bit is set, the corresponding consumed data byte is placed in the DeviceLogix data table
79	Zone #2 Mask	Bit enumerated consumed data mask for zone 2. Each bit represents a byte in consumed data up to 8 bytes in length. If a mask bit is set, the corresponding consumed data byte is placed in the DeviceLogix data table
80	Zone #3 Mask	Bit enumerated consumed data mask for zone 3. Each bit represents a byte in consumed data up to 8 bytes in length. If a mask bit is set, the corresponding consumed data byte is placed in the DeviceLogix data table
81	Zone #4 Mask	Bit enumerated consumed data mask for zone 4. Each bit represents a byte in consumed data up to 8 bytes in length. If a mask bit is set, the corresponding consumed data byte is placed in the DeviceLogix data table

Param #	Parameter Name	Parameter Description
82	Zone #1 Offset	The byte offset into the ZIP data portion of the DeviceLogix data table to place the chosen consumed data bytes for zone 1.
83	Zone #2 Offset	The byte offset into the ZIP data portion of the DeviceLogix data table to place the chosen consumed data bytes for zone 2.
84	Zone #3 Offset	The byte offset into the ZIP data portion of the DeviceLogix data table to place the chosen consumed data bytes for zone 3.
85	Zone #4 Offset	The byte offset into the ZIP data portion of the DeviceLogix data table to place the chosen consumed data bytes for zone 4.
86	Zone #1 EPR	The Expected Packet Rate in msec. for the zone 1 consuming connection. If consumed data is not received in 4 times this value, the zone connection times out and "Zone #1 Health" reports 1 = Not Healthy.
87	Zone #2 EPR	The Expected Packet Rate in msec. for the zone 2 consuming connection. If consumed data is not received in 4 times this value, the zone connection times out and "Zone #2 Health" reports 1 = Not Healthy
88	Zone #3 EPR	The Expected Packet Rate in msec. for the zone 3 consuming connection. If consumed data is not received in 4 times this value, the zone connection times out and "Zone #3 Health" reports 1 = Not Healthy
89	Zone #4 EPR	The Expected Packet Rate in msec. for the zone 4 consuming connection. If consumed data is not received in 4 times this value, the zone connection times out and "Zone #4 Health" reports 1 = Not Healthy
90	Zone #1 Control	Zone 1 Control Word. Default Bit 1 set, all other bits clear. Bit0=Security Enable 1=Enable data security Bit1=COS Cnxn 1=Consume DNet Group 2 COS messages Bit2=Poll Cnxn 1=Consume DNet Group 2 Poll Response msgs. Bit3=Strobe Cnxn 1=Consume DNet Group 2 Strobe Response msgs. Bit4=Multicast Poll 1=Consume Multicast Poll Response messages.
91	Zone #2 Control	Zone 2 Control Word. Default Bit 1 set, all other bits clear. Bit0=Security Enable 1=Enable data security Bit1=COS Cnxn 1=Consume DNet Group 2 COS messages Bit2=Poll Cnxn 1=Consume DNet Group 2 Poll Response msgs. Bit3=Strobe Cnxn 1=Consume DNet Group 2 Strobe Response msgs. Bit4=Multicast Poll 1=Consume Multicast Poll Response messages.
92	Zone #3 Control	Zone 3 Control Word. Default Bit 1 set, all other bits clear. Bit0=Security Enable 1=Enable data security Bit1=COS Cnxn 1=Consume DNet Group 2 COS messages Bit2=Poll Cnxn 1=Consume DNet Group 2 Poll Response msgs. Bit3=Strobe Cnxn 1=Consume DNet Group 2 Strobe Response msgs. Bit4=Multicast Poll 1=Consume Multicast Poll Response messages.
93	Zone #4 Control	Zone 4 Control Word. Default Bit 1 set, all other bits clear. Bit0=Security Enable 1=Enable data security Bit1=COS Cnxn 1=Consume DNet Group 2 COS messages Bit2=Poll Cnxn 1=Consume DNet Group 2 Poll Response msgs. Bit3=Strobe Cnxn 1=Consume DNet Group 2 Strobe Response msgs. Bit4=Multicast Poll 1=Consume Multicast Poll Response messages.
94	Zone #1 Key	When the "Security Enable" bit for zone 1 is enabled, this value must match the value of the Device Value Key parameter in the device whose data is being consumed for zone 1.
95	Zone #2 Key	When the "Security Enable" bit for zone 1 is enabled, this value must match the value of the Device Value Key parameter in the device whose data is being consumed for zone 2.
96	Zone #3 Key	When the "Security Enable" bit for zone 1 is enabled, this value must match the value of the Device Value Key parameter in the device whose data is being consumed for zone 3.
97	Zone #4 Key	When the "Security Enable" bit for zone 1 is enabled, this value must match the value of the Device Value Key parameter in the device whose data is being consumed for zone 4.
98	Device Value Key	This value is produced in the last 2 bytes of data when one of the ZIP assemblies is chosen for data production.
99	Zone Ctrl Enable	Global enable for ZIP peer-to-peer messaging. This parameter must be disabled before any changes to the ZIP configuration for the device can be made. 0=Disable; 1=Enable

Data Production

In a typical ZIP system, each device on the network automatically produces I/O data using "Change of State" (COS) triggering. The automatic production of this COS data by an ArmorStart is enabled by setting Parameter 67 (AutoRun ZIP) to a value of 1 = Enable. Then COS data is produced automatically when the global ZIP enable parameter (Zone Ctrl Enable, Parameter 99) is set to the value of 1 = Enable. Data production takes place at a rate specified by Parameter 68 (Zone ProducedEPR). The minimum period between Change of State productions is determined by the value of Parameter 69 (Zone ProducedPIT)

Data Consumption

In the ArmorStart data from up to 4 other devices can be consumed for use in the local logic. The four devices whose data is to be consumed are logically referred to by zone number, i.e. zones 1 – 4. To configure an ArmorStart to consume data from another node on the network, the node address or "MacId" is placed in the proper "Zone MacId" parameter (parameters 70-73). For example to configure an ArmorStart to consume data for zone 1 from node number 11 on the network, the value 11 is placed in Parameter 70 (Zone #1 MacId).

Not all zones need to be configured to consume data. If the user wishes to turn off data consumption for a zone, the value 64 is placed in the Zone MacId parameter for that zone.

The ArmorStart monitors the frequency at which all consumed data is received in order to determine the health of each zone's data connection. The Zone EPR parameters (parameters 86-89) define the "Expected Packet Rate" for each of the four zone connections.

If no consumed data for a zone is received in four times the EPR, then the zone connection times out, and the value of the corresponding "Zone Health" parameter (parameters 74-77) is set to the value 1 = Not Healthy. The "Zone Health" status of each zone is also available for use in DeviceLogix programs.

Mapping Consumed Data to the DeviceLogix Data Table.

Consumed data for the four zones is placed in an 8-byte section of the DeviceLogix Data Table. Individual bits in this section of the DeviceLogix Data Table can be used in DeviceLogix programs. The table below shows the organization of the 8 bytes of the data table:

Byte #	Bit Number and Name							
0	ZIP 7	ZIP 6	ZIP 5	ZIP 4	ZIP 3	ZIP 2	ZIP 1	ZIP 0
1	ZIP 15	ZIP 14	ZIP 13	ZIP 12	ZIP 11	ZIP 10	ZIP 9	ZIP 8
2	ZIP 23	ZIP 22	ZIP 21	ZIP20	ZIP 19	ZIP 18	ZIP 17	ZIP 16
3	ZIP 31	ZIP 30	ZIP 29	ZIP 28	ZIP 27	ZIP 26	ZIP 25	ZIP 24
4	ZIP 39	ZIP 38	ZIP 37	ZIP 36	ZIP 35	ZIP 34	ZIP 33	ZIP 32
5	ZIP 47	ZIP 46	ZIP 45	ZIP 44	ZIP 43	ZIP 42	ZIP 41	ZIP 40
6	ZIP 55	ZIP 54	ZIP 53	ZIP 52	ZIP 51	ZIP 50	ZIP 49	ZIP 48
7	ZIP 63	ZIP 62	ZIP 61	ZIP 60	ZIP 59	ZIP 58	ZIP 57	ZIP 56

The “Zone Mask” parameters (parameters 78-81) select individual bytes within a consumed message for placement in the DeviceLogix Data Table. Each single bit in the mask represents a corresponding byte in the consumed message packet. For example, consider an ArmorStart that has zone 1 configured to consume data from another ArmorStart that is producing data of the following format:

Instance 163 Standard Produced Starter with Network Outputs and ZIP CCV								
Byte	**Bit 7**	**Bit 6**	**Bit 5**	**Bit 4**	**Bit 3**	**Bit 2**	**Bit 1**	**Bit 0**
1	—	—	—	Ready	Running Rev	Running Fwd	Warning	Tripped
2	—	—	140M On	HOA	User In 4	User In 3	User In 2	User In 1
3	Net Out 8	Net Out 7	Net Out 6	Net Out 5	Net Out 4	Net Out 3	Net Out 2	Net Out 1
4	—	Net Out 15	Net Out 14	Net Out 13	Net Out 12	Net Out 11	Net Out 10	Net Out 9
5	Device Value Key (low)							
6	Device Value Key (high)							

The user can choose to place only bytes 1 and 2 of the above consumed data in the DeviceLogix Data Table by selecting a Zone Mask value of 00000011 binary as shown in the following RSNetWorx for DeviceNet screen:

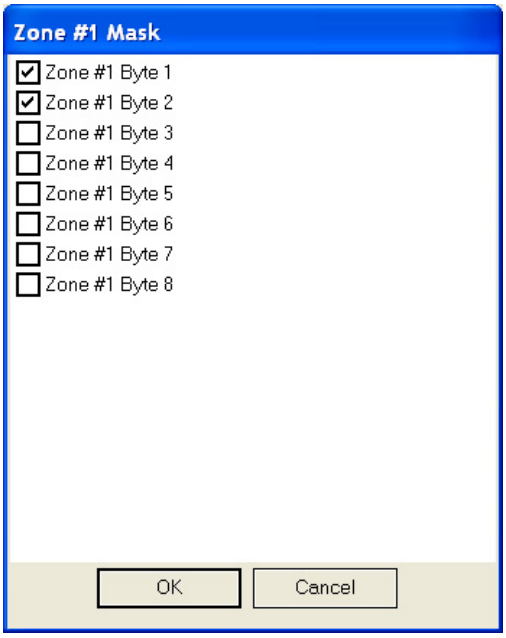

The "Zone Offset" parameters (parameters 82-85) determine where in the DeviceLogix Data Table to place the consumed data bytes chosen for mapping. The "Zone Offset" value corresponds to a byte in the DeviceLogix Data Table where the data should be placed. Continuing the example from above, a value of 2 in the "Zone #1 Offset" parameter would result in the masked consumed data bytes being placed starting at byte 2 in the data table. This would result in the following ZIP bit assignments:

ZIP 16 = Zone 1: Tripped
ZIP 17 = Zone 1: Warning
ZIP 18 = Zone 1: Running Fwd
ZIP 19 = Zone 1: Running Rev
ZIP 20 = Zone 1: Ready
ZIP 21 = Zone 1: reserved
ZIP 22 = Zone 1: reserved
ZIP 23 = Zone 1: reserved
ZIP 24 = Zone 1: User In 1
ZIP 25 = Zone 1: User In 2
ZIP 26 = Zone 1: User In 3
ZIP 27 = Zone 1: User In 4
ZIP 28 = Zone 1: HOA
ZIP 29 = Zone 1: 140M Stat
ZIP 30 = Zone 1: reserved
ZIP 31 = Zone 1: reserved

ZIP bits appear in the list of Network Input Points that are available for use in the DeviceLogix Editor in RSNetWorx for DeviceNet as shown below:

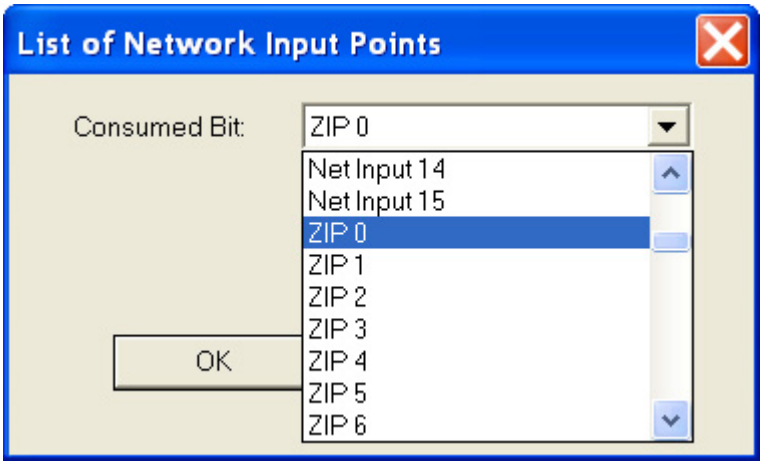

ZIP Example

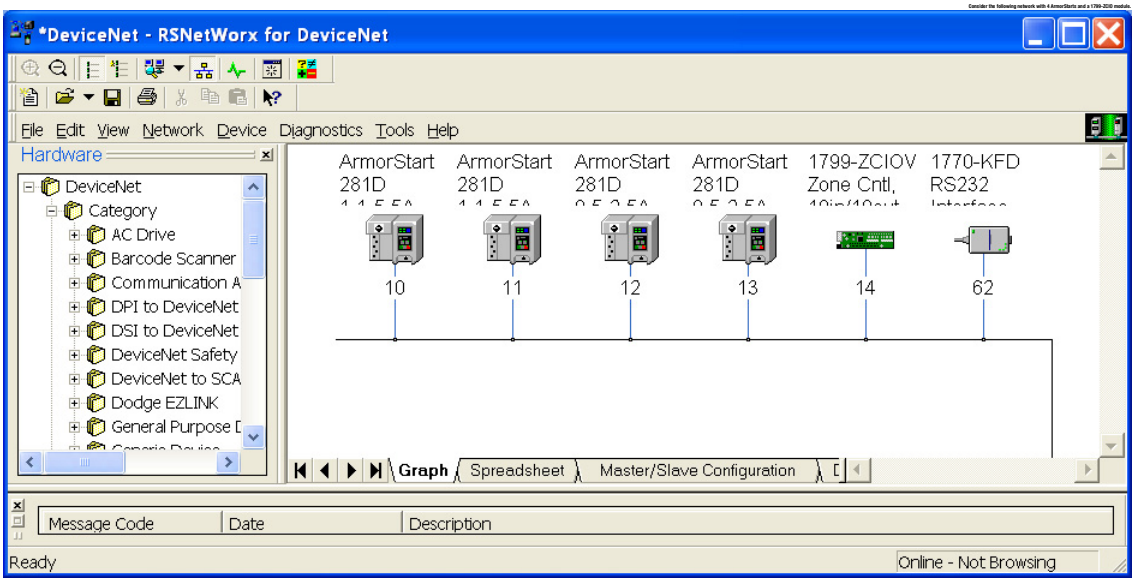

Configure node 10 to consume data as follows:

Zone 1 data comes from node 11

Zone 2 data comes from node 12

Zone 3 data comes from node 13

Zone 4 data comes from node 14.

First set up nodes 11-14 to “Auto Produce” data when ZIP is enabled.

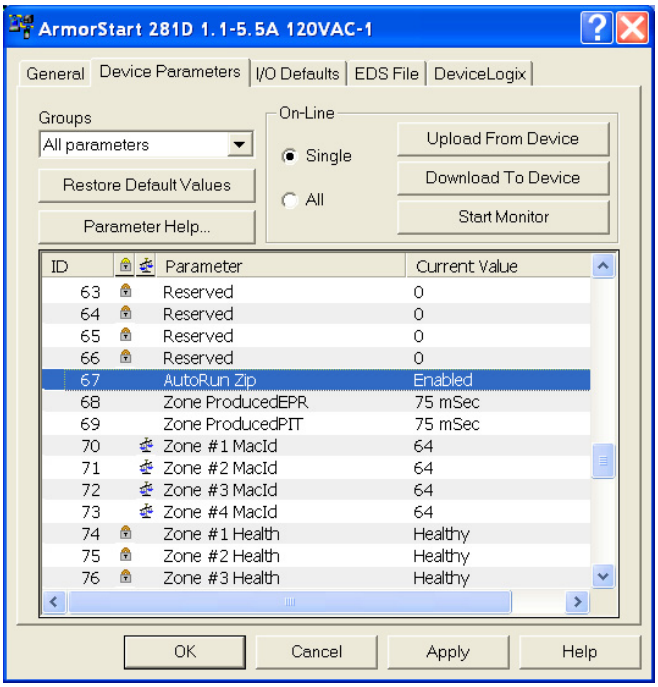

For the ArmorStarts at node 11-13 (shown above) this is done by setting parameter 67 “AutoRun Zip” to “Enabled”. Note that parameters 68 and 69 are left at their default values so that data is produced every 75 msec.

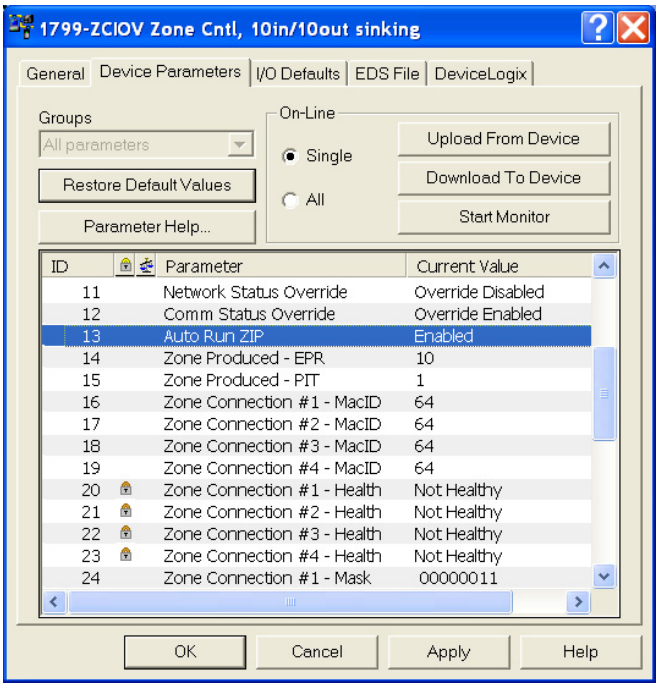

Next configure data consumption for the 4 zones in the ArmorStart at node 10.

First set the “Zone MacId” parameters as shown below:

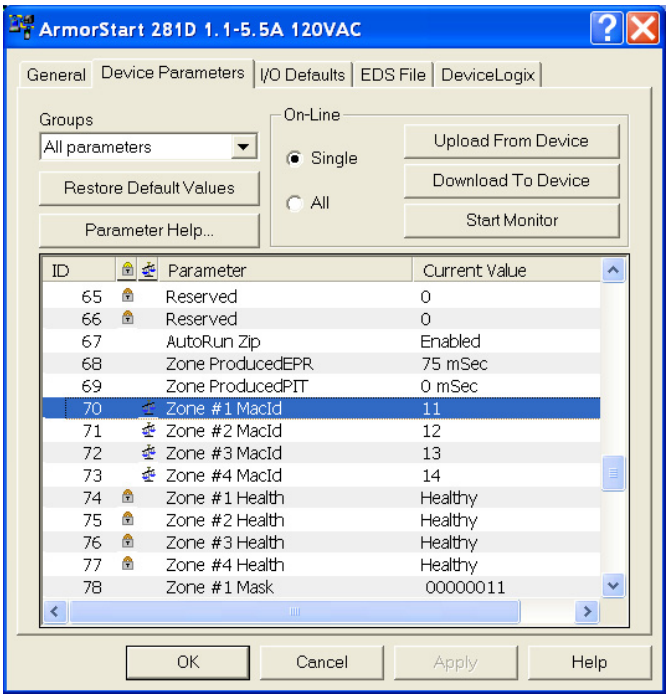

Leave the “Zone EPR” parameters at their default value of 75 msec. This tells the ArmorStart that if no data for a zone is consumed for a period of 300 msec (four times the EPR), the zone connection should time out and the health status should be set to “Not Healthy”. Also leave the “Zone Control” parameters at their default telling the ArmorStart to consume Change of State Data for each zone, and to disable data security checking. Since data security checking is disabled, parameters 94-98 can be left at their default values of 0.

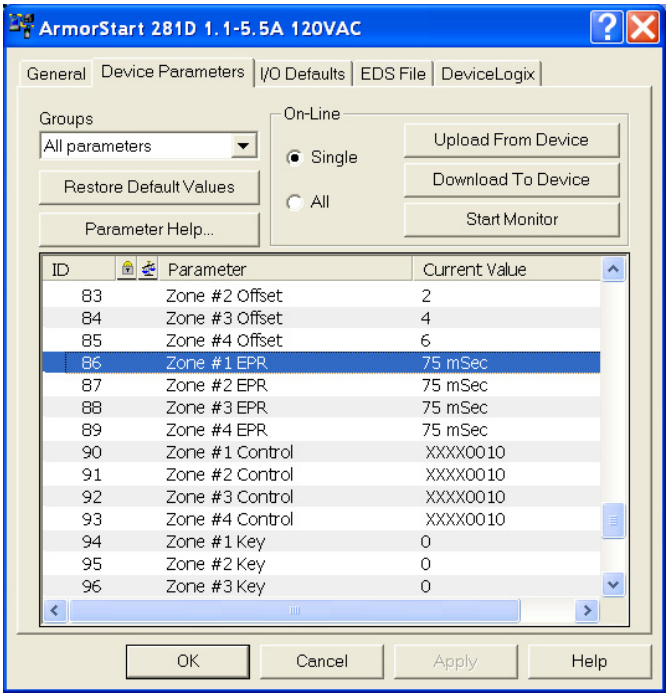

Set the “Zone Masks” to the value of 00000011 binary. This tells each zone to map bytes 1 and 2 to the DeviceLogix Data Table.

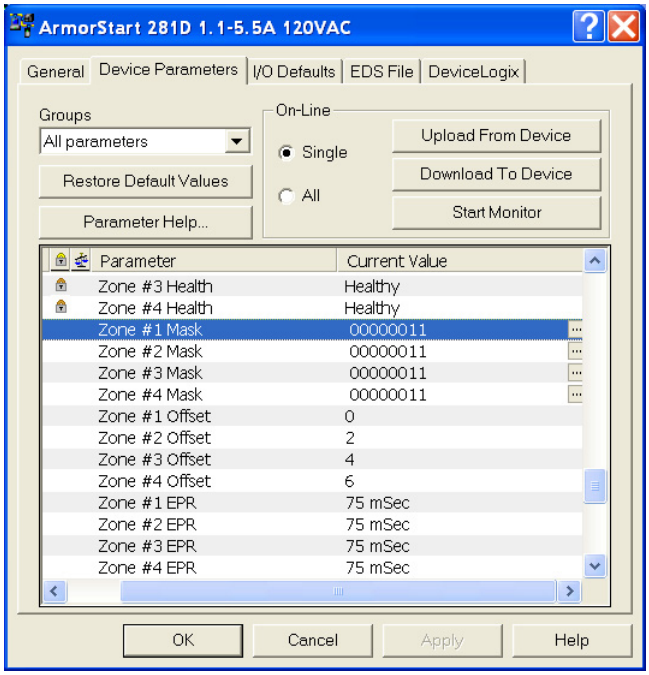

Set the “Zone Offsets as shown below. This maps zone 1 data to byte 0 of the DeviceLogix Data Table, zone 2 data to byte 2 of the DeviceLogix Data Table, zone 3 data to byte 4 of the DeviceLogix Data Table and zone 4 data to byte 6 of the DeviceLogix Data Table.

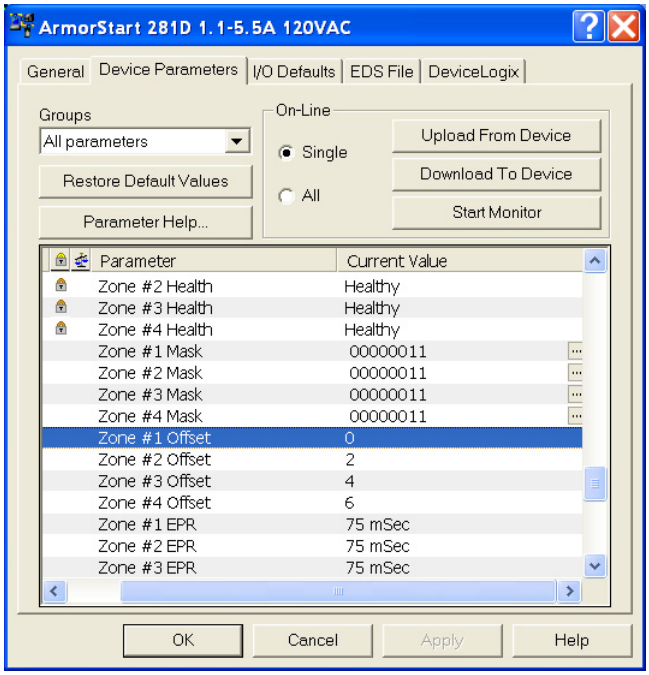

Assuming the ArmorStarts mapped to zones 1 to 3 are producing the following data:

Instance 163 Standard Produced Starter with Network Outputs and ZIP CCV								
Byte	**Bit 7**	**Bit 6**	**Bit 5**	**Bit 4**	**Bit 3**	**Bit 2**	**Bit 1**	**Bit 0**
1	—	—	—	Ready	Running Rev	Running Fwd	Warning	Tripped
2	—	—	140M On	HOA	User In 4	User In 3	User In 2	User In 1
3	Net Out 8	Net Out 7	Net Out 6	Net Out 5	Net Out 4	Net Out 3	Net Out 2	Net Out 1
4	—	Net Out 15	Net Out 14	Net Out 13	Net Out 12	Net Out 11	Net Out 10	Net Out 9
5	Device Value Key (low)							
6	Device Value Key (high)							

And assuming that the 1799-ZCIO module is producing the following data:

1799-ZCIO Produced Assembly								
Byte	**Bit 7**	**Bit 6**	**Bit 5**	**Bit 4**	**Bit 3**	**Bit 2**	**Bit 1**	**Bit 0**
1	Input 7	Input 6	Input 5	Input 4	Input 3	Input 2	Input 1	Input 0
2	—	Logic Ena	—				Input 9	Input 8
3	Output 7	Output 6	Output 5	Output 4	Output 3	Output 2	Output 1	Output 0
4	—						Output 9	Output 8
5	Net Out 7	Net Out 6	Net Out 5	Net Out 4	Net Out 3	Net Out 2	Net Out 1	Net Out 0
6	ZIP CCV (Low)							
7	ZIP CCV (High)							

The above configuration results in the following DeviceLogix ZIP Data Table mapping

ZIP 0 = Zone 1: Tripped
ZIP 1 = Zone 1: Warning
ZIP 2 = Zone 1: Running Fwd
ZIP 3 = Zone 1: Running Rev
ZIP 4 = Zone 1: Ready
ZIP 5 = Zone 1: reserved
ZIP 6 = Zone 1: reserved
ZIP 7 = Zone 1: reserved
ZIP 8 = Zone 1: User In 1
ZIP 9 = Zone 1: User In 2
ZIP 10 = Zone 1: User In 3
ZIP 11 = Zone 1: User In 4
ZIP 12 = Zone 1: HOA
ZIP 13 = Zone 1: 140M Stat
ZIP 14 = Zone 1: reserved
ZIP 15 = Zone 1: reserved

ZIP 16 = Zone 2: Tripped
ZIP 17 = Zone 2: Warning
ZIP 18 = Zone 2: Running Fwd
ZIP 19 = Zone 2: Running Rev
ZIP 20 = Zone 2: Ready
ZIP 21 = Zone 2: reserved
ZIP 22 = Zone 2: reserved
ZIP 23 = Zone 2: reserved
ZIP 24 = Zone 2: User In 1
ZIP 25 = Zone 2: User In 2
ZIP 26 = Zone 2: User In 3
ZIP 27 = Zone 2: User In 4
ZIP 28 = Zone 2: HOA
ZIP 29 = Zone 2: 140M Stat
ZIP 30 = Zone 2: reserved
ZIP 31 = Zone 2: reserved

ZIP 32 = Zone 3: Tripped
ZIP 33 = Zone 3: Warning
ZIP 34 = Zone 3: Running Fwd
ZIP 35 = Zone 3: Running Rev
ZIP 36 = Zone 3: Ready
ZIP 37 = Zone 3: reserved
ZIP 38 = Zone 3: reserved
ZIP 39 = Zone 3: reserved
ZIP 40 = Zone 3: User In 1
ZIP 41 = Zone 3: User In 2
ZIP 42 = Zone 3: User In 3
ZIP 43 = Zone 3: User In 4
ZIP 44 = Zone 3: HOA
ZIP 45 = Zone 3: 140M Stat
ZIP 46 = Zone 3: reserved
ZIP 47 = Zone 3: reserved

ZIP 48 = Zone 4: Input 0
ZIP 49 = Zone 4: Input 1
ZIP 50 = Zone 4: Input 2
ZIP 51 = Zone 4: Input 3
ZIP 52 = Zone 4: Input 4
ZIP 53 = Zone 4: Input 5
ZIP 54 = Zone 4: Input 6
ZIP 55 = Zone 4: Input 7
ZIP 56 = Zone 4: Input 8
ZIP 57 = Zone 4: Input 9
ZIP 58 = Zone 4: reserved
ZIP 59 = Zone 4: reserved
ZIP 60 = Zone 4: reserved
ZIP 61 = Zone 4: reserved
ZIP 62 = Zone 4: Logic Ena
ZIP 63 = Zone 4: reserved

Finding ZIP bits in the DeviceLogix Editor

The 64 ZIP bits are available for use in DeviceLogix programs in the list of "Network Input Points".

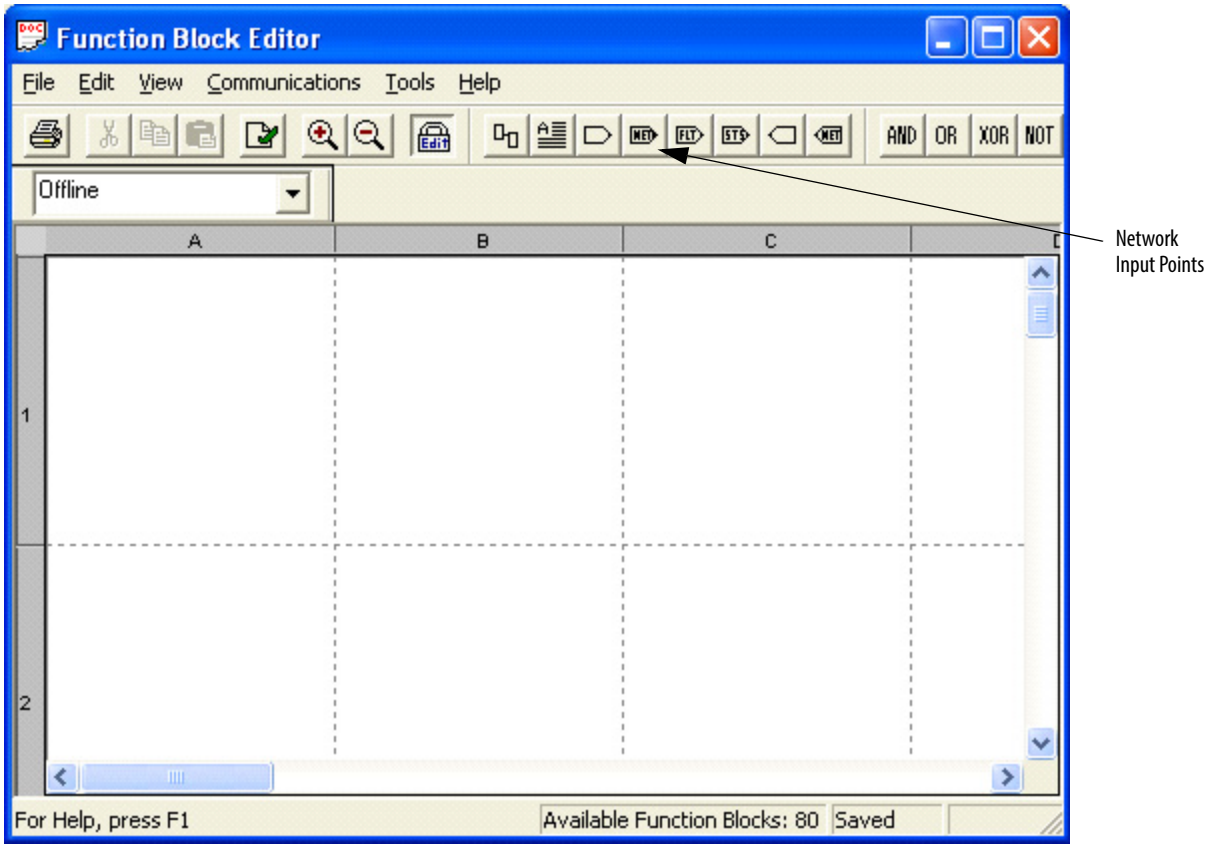

Select "Network Input Points" in the DeviceLogix editor toolbar, and scroll down past the first 16 Network Inputs. The 64 ZIP bits are available for use in the list as shown below:

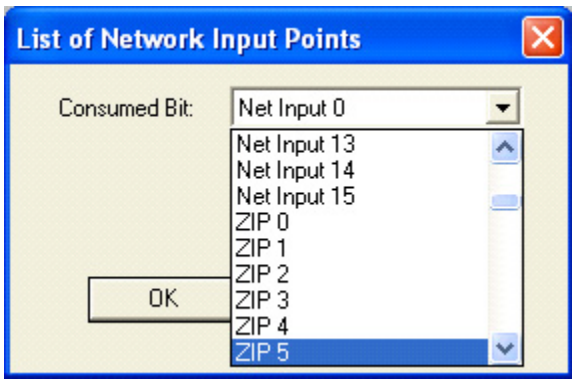

Diagnostics

Overview

This chapter describes the fault diagnostics of the ArmorStart distributed motor controller and the conditions that cause various faults to occur.

Protection Programming

Many of the protective features available with the ArmorStart distributed motor controller can be enabled and adjusted through the programming parameters provided. For further details on programming, see Chapter 3, 4, or 5, Program and Status Parameters.

Fault Display

The ArmorStart distributed motor controller comes equipped with a built-in LED status indication which provides four status LEDs and a Reset button. The LEDs provide status indication for the following:

- **Power LED:**
  The LED is illuminated solid green when control power is present and with the proper polarity
- **RUN LED:**
  This LED is illuminated solid green when a start command and control power are present
- **Network LED:**
  This bi-color (red/green) LED indicates the status of the communication link
- **FAULT LED:**
  Indicates Controller Fault (Trip) condition

The Reset Button provides local fault trip reset.

Figure 57 - LED Status Indication and Reset

IMPORTANT Resetting the fault does not correct the cause of the fault condition. Corrective action must be taken before resetting the fault.

Clear Fault

You may clear a fault using the following methods:

- Remotely via network communications
- A remote reset is attempted upon detection of a rising edge (0 to 1 transition) of the "Fault Reset" bit in the various I/O assemblies. A remote reset is also attempted upon detection of the rising edge of the "Fault Reset" parameter.
- Locally via the "Reset" button on the LED Status indication keypad.

Fault Codes

Table 35 - provides a complete reference of the Fault LED indications for Bulletin 280 and 281 ArmorStart distributed motor controllers.

Table 35 - Fault Indication

Blink Pattern	Fault Types	
	Bulletin 280, 281	Bulletin 284
1	Short Circuit	Short Circuit
2	Overload Trip	Overload Trip
3	Phase Loss	Phase Short
4	Reserved	Ground Fault
5	Reserved	Stall
6	Control Power	Control Power
7	I/O Fault	I/O Fault
8	Over Temperature	Over Temperature
9	Phase Imbalance	Over Current
10	DeviceNet Power Loss	DeviceNet Power Loss
11	Reserved	Internal Communications
12	Reserved	DC Bus Fault
13	EEPROM Fault	EEPROM Fault
14	Hardware Fault	Hardware Fault
15	Reserved	Restart Retries
16	Reserved	Misc. Fault

Fault Definitions

Short Circuit

Short Circuit indicates that the Bulletin 140M motor protector has tripped, or that the internal wiring protection algorithm has detected an unsafe current surge. This fault cannot be disabled. The Fault LED flashes a 1-blink pattern.

Overload Trip

The load has drawn excessive current and based on the overload trip class selected, the device has tripped. This fault cannot be disabled. The Fault LED flashes a 2-blink pattern.

Phase Loss

Indicates a missing supply phase. This fault can be disabled and is disabled by default. The Fault LED flashes a 3-blink pattern.

Phase Short

Indicates the drive has detected a phase short. This fault cannot be disabled. The Fault LED flashes a 3-blink pattern.

Shorted SCR

This fault is generated when the SMC-3 detects a short circuit condition in the SMC-3 SCRs. This fault cannot be disabled. The Fault LED flashes a 4-blink pattern.

Ground Fault

Indicates the drive has detected a ground fault. This fault cannot be disabled. The Fault LED flashes a 4-blink pattern.

Stall

Indicates the drive has detected a stall condition, indicating the motor has not reached full speed. This fault cannot be disabled. The Fault LED flashes a 5-blink pattern.

Control Power

Indicates a loss of control power voltage or a blown control power fuse. This fault can be disabled and *is* disabled by default. The Fault LED flashes a 6-blink pattern.

I/O Fault

This error can indicate a shorted sensor, shorted input device, or input wiring mistakes. It can also indicate a blown output fuse. This fault can be disabled and *is* disabled by default. The Fault LED flashes a 7-blink pattern.

Over Temperature

Indicates that the operating temperature has been exceeded. This fault cannot be disabled. The Fault LED flashes a 8-blink pattern.

Phase Imbalance

Indicates an imbalance supply voltage. This fault can be disabled and *is* disabled by default. The Fault LED flashes a 9-blink pattern.

Over Current

Indicates the drive has detected an over current fault. This fault cannot be disabled. The Fault LED flashes a 9-blink pattern.

DeviceNet Power Loss

DeviceNet power has been lost or has dropped below the 12V threshold. This fault can be disabled and *is* disabled by default. The Fault LED flashes a 10-blink pattern.

Internal Communication Fault

Indicates an internal communication fault has been detected between the VFD and the main control or DB1 and main control. This fault cannot be disabled. The Fault LED flashes 11-blink pattern.

DC Bus Fault

Indicates the drive has detected a DC Bus Fault. This fault cannot be disabled. The Fault LED flashes a 12-blink pattern.

EEPROM Fault

This is a major fault, which renders the ArmorStart inoperable. This fault cannot be disabled. The Fault LED flashes a 13-blink pattern.

Hardware Fault

This indicates an Internal FAN RPM is low, Internal temperature monitor failure, Internal Brake fuse opened, or incorrect base or control module. This fault cannot be disabled. The Fault LED flashes a 14-blink pattern.

Restart Retries

This fault is generated when the drive detects that the auto retries count has been exceeded. This fault cannot be disabled. The Fault LED flashes a 15-blink pattern.

Miscellaneous Faults

For Bulletin 284 units, this fault is actually the logical OR of the drive's DB1 Brake fault, Heatsink Over Temperature (fault code F8), Params Defaulted fault (fault code F48) and SVC Autotune fault (fault code F80).

This fault cannot be disabled. The Fault LED flashes a 16-blink pattern.

Notes:

Troubleshooting

Introduction

The purpose of this chapter is to assist in troubleshooting the ArmorStart distributed motor controller using the LED Status Display and diagnostic parameters.

ATTENTION: Servicing energized industrial control equipment can be hazardous. Electrical shock, burns or unintentional actuation of controlled industrial equipment may cause death or serious injury. For safety of maintenance personnel as well as others who might be exposed to electrical hazards associated with maintenance activities, follow the local safety related work practices (for example, the NFPA70E, Part II in the United States). Maintenance personnel must be trained in the safety practices, procedures, and requirements that pertain to their respective job assignments.

ATTENTION: Do not attempt to defeat or override fault circuits. The cause of the fault indication must be determined and corrected before attempting operation. Failure to correct a control system of mechanical malfunction may result in personal injury and /or equipment damage due to uncontrolled machine system operation.

ATTENTION: The drive contains high voltage capacitors that take time to discharge after removal of mains supply. Before working on drive, ensure isolation of mains supply from line inputs (R, S, T, [L1, L2, L3]). Wait three minutes for capacitors to discharge to safe voltage levels. Failure to do so may result in personal injury or death.

ATTENTION: Darkened display LEDs is not an indication that capacitors have discharged to safe voltage levels.

ATTENTION: Only qualified personnel familiar with adjustable frequency AC drives and associated machinery should plan or implement the installation, startup, and subsequent maintenance of the system. Failure to comply may result in personal injury and/or equipment damage.

ATTENTION: This drive contains electrostatic discharge-(ESD) sensitive parts and assemblies. Static control precautions are required when installing, testing, servicing, or repairing this assembly. Component damage may result if ESD control procedures are not followed. If you are not familiar with static control procedures, see Allen-Bradley Publication 8000-4.5.2, *Guarding against Electrostatic Damage*, or any other applicable ESD protection handbook.

ATTENTION: An incorrectly applied or installed drive can result in component damage or a reduction in product life. Wiring or application errors, such as undersizing the motor, incorrect or inadequate AC supply, or excessive ambient temperatures may result in malfunction of the system.

Bulletin 280, 281 Troubleshooting

The following flowchart for Bulletin 280, 281 units, is provided to aid in quick troubleshooting.

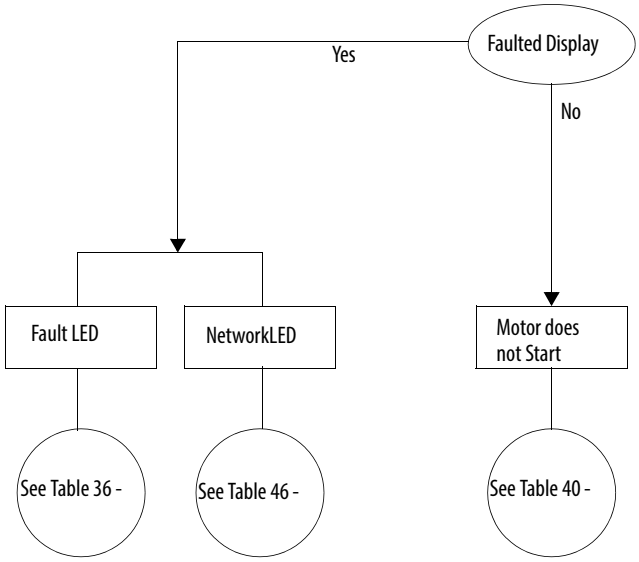

Table 36 - Fault LED Indications for Bulletin 280 and 281 ArmorStart Distributed Motor Controllers

Blink Pattern	Definitions	Possible Causes or Remedies
1	Short Circuit	The motor circuit protector has tripped, or the internal wiring protection algorithm has detected an unsafe current range. Try to reset the protector if tripped. If the condition continues, check the power wiring. This fault cannot be disabled.
2	Overload Trip	The load has drawn excessive current and based on the trip class selected, the device has tripped. Verify that the load is operating correctly and the ArmorStart is properly set-up. This fault cannot be disabled.
3	Phase Loss	The ArmorStart has detected a missing phase. Verify that three-phase voltage is present at the line side connections. This fault can be disabled and is disabled by default.
4	Reserved	Not Used
5	Reserved	Not Used
6	Control Power	The ArmorStart has detected a loss of the control power voltage or blown control power fuse. Check control voltage, wiring, and proper polarity. Replace control voltage fuse if necessary. This fault can be disabled and is disabled by default.
7	I/O Fault	This error indicates a shorted sensor, shorted input device, or input wiring mistakes or a blown output fuse. If this fault occurs, the offending problem should be isolated or removed prior to restarting the system. This fault can be disabled and is disabled by default.
8	Over Temperature	Indicates that the operating temperature has been exceeded. This fault cannot be disabled.
9	Phase Imbalance	The ArmorStart has detected a voltage imbalance. Check the power system and correct if necessary. This fault can be disabled and is disabled by default.
10	DNet Power Loss	DeviceNet power has been lost or has dropped below the 12 volt threshold. Check the state of the network power supply and look for DeviceNet media problems. This fault can be disabled and is disabled by default.
11	Reserved	Not Used
12	Reserved	Not Used
13	EEPROM Fault	This is a major fault, which renders the ArmorStart inoperable. Possible causes of this fault are transients induced during EEprom storage routines. If the fault was initiated by a transient, power cycling should clear the problem; otherwise, replacement of the ArmorStart may be required. This fault cannot be disabled.
14	Hardware Fault	This fault indicates that a serious hardware problem exists. Check for a base/starter module mismatch. If no mismatch exists, refer to parameter 61 for additional fault detail. The ArmorStart may need to be replaced if the fault persists. (Hdw Flt is the factory-enabled default setting.) This fault cannot be disabled.

Table 37 - Motor Does Not Start – No Output Voltage to the Motor

LED Status Indication	Possible Cause	Possible Solutions
Fault or Network Status Led indicates a fault condition	See Fault Description	See Table 36 - and/or Table 46 - addressing fault conditions
No Fault condition indicated	Three Phase is absent	Check power system. Check three-phase power wiring and correct if necessary
Display is blank	Control voltage is absent	Check control wiring and polarity. Correct if necessary.

Bulletin 284 Troubleshooting

Fault Definitions

Some of the Bulletin 284 ArmorStart distributed motor controller faults are detected by the internal hardware of the ArmorStart, while others are detected by the internal drive. For internal drive faults, the internal hardware of the ArmorStart simply polls the drive for the existence of faults and reports the fault state. No fault latching is done by the internal hardware of the ArmorStart for these faults. The Pr FltReset Mode parameter (Parameter 23) determines the Auto Resettability of only the faults that are detected on the main control board. These faults are listed as “param 23” autoresettable in 38. The Auto Resettability of the faults that are detected in the internal drive is controlled by internal drive parameters. These faults are listed as drive controlled in 38. The following flowchart for Bulletin 284 units, is provided to aid in quick troubleshooting.

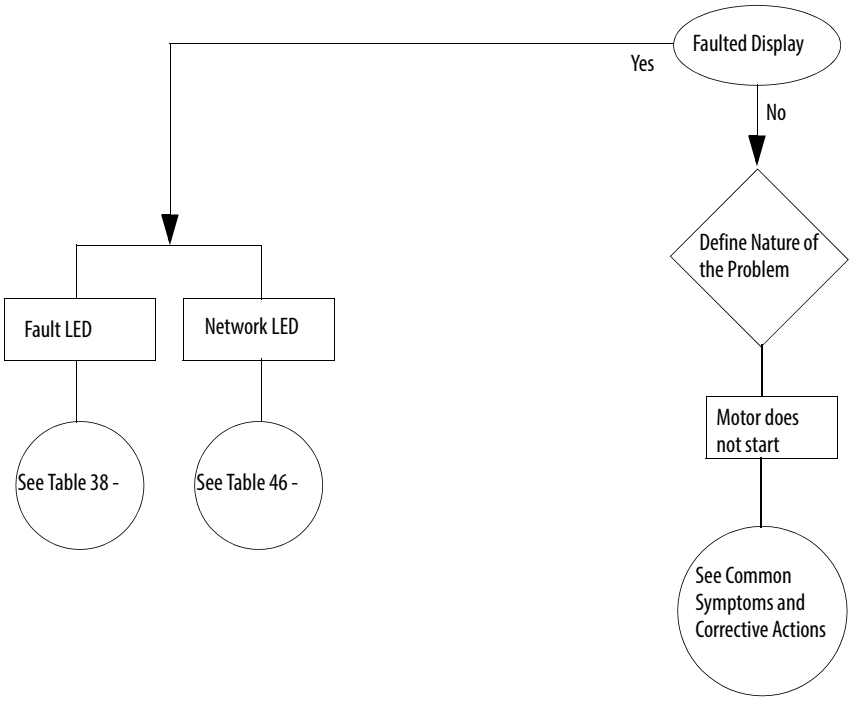

Table 38 - Fault LED Indicators for Bulletin 284

Bit/Blink Pattern	Auto-Resettable	284 Trip Status	Description	Action
1	No	Short Circuit	The circuit breaker (140M) has tripped.	Determine cause of trip. Try to reset the circuit breaker using the disconnect handle. If the conditions continue, check power wiring or replace based module. This cannot be disabled.
2	Drive Controlled	Overload (Drive Codes 7 and 64)	An excessive motor load exists	1. Reduce load so drive output current does not exceed the current set by Parameter 133 (Motor OL Current). 2. Verify Parameter 184 (Boost Select) setting. 3. Drive rating of 150% for 1 minute. 4. Reduce load or extend Accel Time two hundred percent or when 3 seconds has been exceeded.
3	Drive Controlled	Phase Short (Drive Codes 38…43)	1. Phase U, V, or W to Gnd. A phase to ground fault has been detected between the drive and motor in this phase. 2. Phase UV, UW, or VW Short. Excessive current has been detected between these two output terminals.	Check the wiring between the drive and motor. Check motor for grounded phase. Check the motor and drive output terminal wiring for a shorted condition. Replace drive if fault cannot be cleared.
4	Drive Controlled	Ground Fault (Drive Code 13)	A current path to earth ground has been detected at one or more of the drive output terminals.	Check the motor and external wiring to the drive output terminals for a grounded condition.
5	Drive Controlled	Stall (Drive Code 6)	Drive is unable to accelerate motor.	Increase Parameters 139…167 (Accel Time x) or reduce load so drive output current does not exceed the current set by Parameter 189 (Current Limit 1).
6	Parameter 23 (PrFlt Reset Mode)	Control Pwr Loss (Switched Power)	The ArmorStart has detected a loss of the control power voltage.	Check control voltage, wiring, and proper polarity (A1/A2 terminal). Also, check and replace the control voltage fuse, if necessary. This fault can be disabled and is disabled by default.
7	Parameter 23 (PrFlt Reset Mode)	Input Fault	This error indicates a shorted sensor, shorted input device, wiring input mistakes, or a blown output fuse.	If this fault occurs, the offending problem should be isolated or removed prior to restarting the system. This fault can be disabled and is disabled by default.
8	Parameter 23 (PrFlt Reset Mode)	Over Temperature	This fault is generated when the operating temperature has been exceeded. This fault cannot be disabled.	Check for blocked or dirty heat sink fins. Make sure that ambient temperature has not exceeded 40 °C (104 °F). Clear the fault or cycle power to the drive.
9	Drive Controlled	Over Current (Drive Codes 12 and 63)	The drive output current has exceeded the hardware current limit.	Check programming. Check for excess load, improper Parameter 184 (Boost Select) setting. DC brake volts set too high or other causes of excess current. Parameter 198 (SW Current Trip) has been exceeded, check load requirements and Parameter 198 setting.
10	Parameter 23 (PrFlt Reset Mode)	Control Power (24V DC) Lost (Unswitched Power)	The 24V DC power supply is below tolerance threshold.	Check the state of the network power supply (A3/A1 terminal) and look for media problems. This fault can be disabled and is disabled by default.
11	No	Internal Comm (See Parameter 61 for details on this fault. F81 is a VFD fault. This could also happen if control power is lost.)	Communication with either the control module (VFD) or Control module has stopped.	See section Fault 11 Detail. If the problem persists replace the unit.
12	Drive Controlled	DC Bus Fault (Drive Codes Reference 3, 4, and 5)	Power Loss - DC bus voltage remained below 85% of nominal. UnderVoltage - DC but voltage fell below the minimum value. OverVoltage - DC bus voltage exceeded maximum value.	Monitor the incoming AC line for low voltage or line power interruption. Check the input fuses. Monitor the AC line for high line voltage or transient conditions. Bus overvoltage can also be caused by motor regeneration. Extend the decel time or install dynamic brake option.
13	No	EEprom (PF Drive Code Reference 100)	The checksum read from the board does not match the checksum calculated.	Set Parameter 141 (Reset to Defaults) to Option 1 “Reset Defaults”.
14	No	Hdw Flt (PF Drive Codes Reference 70 and 122)	Failure has been detected in the drive power section or drive control and I/O section. See Last Protection Fault parameter 61 for details.	1. Cycle power. 2. If Fan RPM fault, replace the fan. 3. Replace drive if fault cannot be cleared.
15	Drive Controlled	Restart Retries (PF Drive Code Reference 33)	Drive unsuccessfully attempted to reset a fault and resume running for the programmed number of Parameter 192 (Auto Rstrt Tries).	Correct the cause of the fault and manually clear.
16	Drive Controlled	Misc. Fault (PF Drive Code Reference 2, 8, 29, 48 and 80)	Heatsink temperature exceeds a predefined value. The drive was commanded to write default values to EEprom. The autotune function was either cancelled by the user or failed. If DB1 option installed see P61 for additional diagnostics.	Check for blocked or dirty heat sink fins. Verify that ambient temperature has not exceeded 40 °C (104 °F) and mounted properly. 1. Clear the fault or cycle power to the drive. 2. Program the drive parameters as needed. Restart procedure. 3. Check for DB1 fault and see DB1 diagnostics.

Fault 11 Detail

Parameter 61 provides a more granular description of the faults that occur.

- An F11 protection fault indicates that the internal communication has stopped
- There is a 10 second delay before an F11 Internal Comm. fault is present
- Common causes of an Internal Comm. fault:
  - The local ArmorStart Disconnect switch is in the OFF position.
  - 3-Phase line power feeding the ArmorStart is not connected or is turned OFF.
  - Switched Control Power is not connected or is turned OFF.
  - Poor power quality (Brown Out)
- First things to check:
  - Verify that the local disconnect is in the ON position.
  - Verify that the unit has 3-Phase Line Voltage present and it is within specified tolerances.
  - Verify that the ArmorStart unit has Control Voltage present and it is within specified tolerances.
  - Attempt to clear the fault by pressing the local reset or sending the ArmorStart a network reset.
  - Cycle power to the ArmorStart unit and try to clear the fault again.
- If an Internal Comm. fault persists, see Parameter 61 – LastPR Fault for additional details on the last protection fault. See the following table for troubleshooting information based on what Parameter 61 returns. Also see Parameters 107...109 to get the VFD fault code that can be referenced below.

Parameter 61 Fault Code	Description	Recommended Action
13 = Control Power Loss	Control power was lost or dipped below the lower threshold long enough to cause the Internal Comm. fault.	• Check that control power is turned on and within specified tolerances. • Check the Control Power fuse, replace if necessary. • Press the local reset or send the unit a network reset once control power is restored.
14 = Control Power Fuse	The control power fuse has blown and the control power circuit no longer is a closed circuit.	• Additional investigation as to why the fuse blew is needed. Take corrective action accordingly. • Replace the fuse and reset the ArmorStart either locally or over the network.
21 = A3 Power Loss	Unswitched (A3/A2) control power was lost or dipped below the lower threshold long enough to cause the Internal Comm. fault. • DeviceNet power loss	• Check that the A3 or DNet power terminal does not have any loose connections. • Press the local reset or send the unit a network reset once the unswitched control power is restored
22 = Internal Comm 24 = Power Loss (3-Phase) 25 = Under Voltage (3-Phase)	• The ArmorStart's MCB lost communications with the VFD. This is most likely due to a loss of 3-phase power. • PF Fault Code 3 or 4	• Check that the local disconnect is in the ON position. • Check for a power quality issue, take appropriate corrective actions. • Check that 3-phase power is present. • Press the local reset or send the unit a network reset
23 = Drive Comm Loss (PF Fault Code 81)	The PowerFlex VFD lost communications with the MCB. This is most likely due to a loss of control power or network power.	• Check that control power and the network power are both present. • Press the local reset or send the unit a network reset.
28 = Base EEPROM	The MCB can't read the base module's EEPROM or isn't communicating correctly with the base module. In the EtherNet/IP units, Parameter 63 – Base Trip provides more detail as to why the base module may not be communicating properly with the control module	• Cycle power to the ArmorStart unit. • Ensure that the control module is seated correctly in the base module • Check the connector on the control module for bent or broken pins
41 = DB1 Comm	The MCB has lost communications with the Dynamic Brake (DB1) board or the EEPROM on the DB1 board may be corrupt.	• Press the local reset or send the unit a network reset • Cycle power to the ArmorStart unit.

Internal Drive Faults

A fault is a condition that stops the drive. There are two fault types.

Type	Description
1	Auto-Reset/Run When this type of fault occurs, and Parameter 192 (Auto Rstrt Tries) Related Parameter(s): 155, 158, 161, 193 is set to a value greater than 0, a user-configurable timer, Parameter 193 (AutoRstrt Delay) Related Parameter(s): 192, begins. When the timer reaches zero, the drive attempts to automatically reset the fault. If the condition that caused the fault is no longer present, the fault is reset and the drive is restarted
2	Non-Resettable This type of fault may require drive or motor repair, or is caused by wiring or programing errors. The cause of the fault must be corrected before the fault can be cleared.

Automatically Clearing Faults (Option/Step)

Clear a Type 1 Fault and Restart the Drive

1. Set Parameter 192 (Auto Rstrt Tries) to a value other than **0**.
2. Set Parameter 193 (Auto Rstrt Delay) to a value other than **0**.

Clear an Overvoltage, Undervoltage or Heatsink OvrTmp Fault without Restarting the Drive

1. Set 192 (Auto Rstrt Tries) to a value other than **0**.
2. Set 193 (Auto Rstrt Delay) to **0**.

Auto Restart (Reset/Run)

The Auto Restart feature provides the ability for the drive to automatically perform a fault reset followed by a start attempt without user or application intervention. This allows remote or unattended operation. Only certain faults are allowed to be reset. Certain faults (Type 2) that indicate possible drive component malfunction are not resettable.Caution should be used when enabling this feature, since the drive attempts to issue its own start command based on user selected programming.

Table 39 - Fault Types, Descriptions, and Actions

No.	Fault	Type ❶	Description	Action
F2	Auxiliary Input	1	Auxiliary input interlock is open.	1. Check remote wiring. 2. Verify communications.
F3	Power Loss	2	DC bus voltage remained below 85% of nominal.	1. Monitor the incoming AC line for low voltage or line power interruption. 2. Check input fuses.
F4	UnderVoltage	1	DC bus voltage fell below the minimum value.	Monitor the incoming AC line for low voltage or line power interruption.
F5	OverVoltage	1	DC bus voltage exceeded maximum value.	Monitor the AC line for high line voltage or transient conditions. Bus overvoltage can also be caused by motor regeneration. Extend the decel time or install dynamic brake option.
F6	Motor Stalled	1	Drive is unable to accelerate motor.	Increase Parameter 139…167 (Accel Time x) or reduce load so drive output current does not exceed the current set by Parameter 189 (Current Limit 1).
F7	Motor Overload	1	Internal electronic overload trip	1. An excessive motor load exists. Reduce load so drive output current does not exceed the current set by Parameter 133 (Motor OL Current). 2. Verify Parameter 184 (Boost Select) setting
F8	Heatsink OvrTmp	1	Heatsink temperature exceeds a predefined value.	1. Check for blocked or dirty heat sink fins. Verify that ambient temperature has not exceeded 40°C. 2. Replace internal fan.
F12	HW OverCurrent	2	The drive output current has exceeded the hardware current limit.	Check programming. Check for excess load, improper programming of Parameter 184 (Boost Select), DC brake volts set too high, or other causes of excess current.
F13	Ground Fault	2	A current path to earth ground has been detected at one or more of the drive output terminals.	Check the motor and external wiring to the drive output terminals for a grounded condition.
F33	Auto Rstrt Tries		Drive unsuccessfully attempted to reset a fault and resume running for the programmed number of Parameter 192 (Auto Rstrt Tries).	Correct the cause of the fault and manually clear.
F38 F39 F40	Phase U to Gnd Phase V to Gnd Phase W to Gnd	2	A phase to ground fault has been detected between the drive and motor in this phase.	1. Check the wiring between the drive and motor. 2. Check motor for grounded phase. 3. Replace starter module if fault cannot be cleared.
F41 F42 F43	Phase UV Short Phase UW Short Phase VW Short	2	Excessive current has been detected between these two output terminals.	1. Check the motor and drive output terminal wiring for a shorted condition. 2. Replace starter module if fault cannot be cleared.
F48	Params Defaulted	2	The drive was commanded to write default values to EEPROM.	1. Clear the fault or cycle power to the drive. 2. Program the drive parameters as needed.
F63	SW OverCurrent	2	Programmed Parameter 198 (SW Current Trip) has been exceeded.	Check load requirements and Parameter 198 (SW Current Trip) setting.
F64	Drive Overload	2	Drive rating of 150% for 1 min. or 200% for 3 sec. has been exceeded.	Reduce load or extend Accel Time.
F70	Power Unit	2	Failure has been detected in the drive power section.	1. Cycle power. 2. Replace starter module if fault cannot be cleared.
F80	SVC Autotune		The autotune function was either cancelled by the user or failed.	Restart procedure.
F81	Comm Loss	2	RS485 (DSI) port stopped communicating.	1. Turn off using Parameter 205 (Comm Loss Action). 2. Replace starter module if fault cannot be cleared.
F100	Parameter Checksum	2	The checksum read from the board does not match the checksum calculated.	Set Parameter 141 (Reset To Defaults) to option 1 **Reset Defaults**.
F122	I/O Board Fail	2	Failure has been detected in the drive control and I/O section.	1. Cycle power. 2. Replace starter module if fault cannot be cleared.

❶ See Table 38 for internal drive fault types.Common Symptoms and Corrective Actions

Table 40 - Motor Does Not Start

Cause(s)	Indication	Corrective Action
No output voltage to the motor.	None	Check the power circuit. • Check the supply voltage. • Check all fuses and disconnects Check the motor. • Verify that the motor is connected properly. • Verify that I/O Terminal 01 is active. • Verify that Parameter 136 (Start Source) matches your configuration. • Verify that Parameter 195 (Reverse Disable) is not prohibiting movement. • Run Autotune parameter 227.
Drive is Faulted	Flashing red status light	Clear fault. • Press Stop • Cycle power • Set Parameter 200 (Fault Clear) to option 1 **Clear Faults**. • Cycle digital input is Parameter 151…154 (Digital Inx Sel) is set to option 7 **Clear Fault**.

Table 41 - Drive Does Not Respond to Changes in Speed Command

Cause(s)	Indication	Corrective Action
No value is coming form the source of the command.	The drive **Run** indicator is lit and output is 0 Hz.	• Check Parameter 112 (Control Source) for correct source. • If the source is an analog input, check wiring and use a meter to check for presence of signal. • Check Parameter 102 (Commanded Freq) to verify correct command.
Incorrect reference source is being selected via remote device or digital inputs.	None	• Check Parameter 112 (Control Source) for correct source. • Check Parameter 114 (Dig In Status) to see if inputs are selecting an alternate source. Verify settings for Parameters 151…154 (Digital Inx Sel). • Check Parameter 138 (Speed Reference) for the source of the speed reference. Reprogram as necessary.
Some applications create an intermittent voltage regeneration condition and the bus regulator tries to compensate.	None	• Disable parameter 217 Bus Regulation. The drive will react faster to changes in speed. • This could also cause DC bus voltage faults if an external resistor is not attached.

Table 42 - Motor and/or Drive Does Not Accelerate to Commanded Speed

Cause(s)	Indication	Corrective Action
Acceleration time is excessive.	None	• Reprogram Parameter 139 (Accel Time 1) or Parameter 167 (Accel Time 2). • Try changing parameter 184 Boost selection to a value of 5 to 14, starting with 5.
Excess load or short acceleration times force the drive into current limit, slowing, or stopping acceleration.	None	• Compare Parameter 103 (Output Current) with Parameter 189 (Current Limit1). • Remove excess load or reprogram Parameter 139 (Accel Time 1) or Parameter 167 (Accel Time 2). • Check for improper setting of Parameter 184 (Boost Select).
Speed command source or value is not as expected.	None	• Verify Parameter 102 (Commanded Freq). • Check Parameter 112 (Control Source) for the proper Speed Command.
Programming is preventing the drive output from exceeding limiting values.	None	Check Parameter 135 (Maximum Freq) to insure that speed is not limited by programming.
Torque performance does not match motor characteristics.	None	• Set motor nameplate full load amps in Parameter 226 (Motor NP FLA). • Use Parameter 227 (Autotune) to perform **Static Tune** or **Rotate Tune** procedure. • Set Parameter 225 (Torque Perf Mode) to option 0V/Hz.

Table 43 - Motor Operation is Unstable

Cause(s)	Indication	Corrective Action
Motor data was incorrectly entered.	None	1. Correctly enter motor nameplate data into Parameters 131, 132, and 133. 2. Enable Parameter 197 (Compensation). 3. Use Parameter 184 (Boost Select) to reduce boost level.

Table 44 - Drive Does Not Reverse Motor Direction

Cause(s)	Indication	Corrective Action
Digital input is not selected for reversing control.	None	Check (Digital Inx Sel). Choose correct input and program for reversing mode.
Motor wiring is improperly phased for reverse.	None	Switch two motor leads.
Reverse is disabled.	None	Check Parameter 195 (Reverse Disable).

Table 45 - Drive Does Not Power Up

Cause(s)	Indication	Corrective Action
No input power to drive.	None	Check the power circuit. • Check the supply voltage. • Check all fuses and disconnects.
Jumper between I/O Terminals P2 and P1 not installed and/or DC Bus Inductor not connected.	None	Install jumper or connect DC Bus Inductor.

DeviceNet Troubleshooting Procedures

The following table identifies possible causes and corrective actions when troubleshooting DeviceNet related failures using the *NETWORK STATUS LED*.

Table 46 - DeviceNet Troubleshooting Procedures

Network Status LED	Definition	Possible Causes
Off	The device has not completed the initialization, is not on an active network, or may not be powered up.	Check to make sure the product is properly wired and configured on the network.
Flashes green-red-off	While waiting to detect the network baud rate, the LED flashes this pattern about every 3 seconds.	If the product stays in this state, it means that there is no set baud rate. Ensure that at least one device on the network has a set baud rate.
Solid Green	The device is operating in a normal condition, and is communicating to another device on the network.	No action Required
Flashing Green	The device is operating in a normal condition, and is on-line, but has no connection to another device. This is the typical state for new devices.	The device may need to be mapped to a master scanner, placed in a scanlist, or have another device communicate to it.
Flashing Red	Recoverable fault has occurred.	Check to make sure the PLC and scanner are operating correctly and that there are no media/cabling issues. Check to see if other networked devices are in a similar state.
Solid Red	The device has detected a major error that has rendered it incapable of communicating on the network (Duplicate MAC ID, Bus-off, media issue).	Troubleshooting should be done to ensure that the network is correct (terminators, lengths, etc.) and there is not a duplicate node problem. If other devices on the network appear to be operating fine and power cycling the device does not work, contact Technical Support.
Flashing Red and Green	The device has detected a network access error and is in a communication faulted state. The device has subsequently received and accepted an Identify Communication Faulted Request Long Protocol message.	This is not a common state for DeviceNet products. Power cycling the device may resolve the problem; however, if the problem continues, it may be necessary to contact technical support.

IP67 Dynamic Brake Diagnostic (DB1)

The IP67 operation is different from most other DB resistors. The ArmorStart includes specialized function the protects the DB from current faults. This capability is found on a optional monitoring board located in the control module of the 284 that is include when the DB1 option is selection in the catalog.

A DB1 fault is not annunciated until the DB switch in the drive is activate and conducting current.

The following conditions are monitored:

- DB Overcurrent resistor value too small (current is too high)
- DB Undercurrent resistor value is too high (current is too low)
- DB Open drive bus voltage is above DB level, but no resistor current was measured

The following conditions cause a fault anytime the DB1 active:

- DB Shorted Switch - detected current when Drive bus voltage is below the DB threshold
- DB Overtemp - DB resistor is too hot
- DB Bus Voltage Link Open - Bus voltage from the drive is not measured for two seconds. Occurs if the internal connection between the main control and the DB1 module has an issue

DB1 Faults

Operation and Troubleshooting of the DB1 - Dynamic Brake

Eight types of DB1 faults are detected and reported in Parameter 61 as either a "DB1 Flt", "DB1 Comm Fault" or DB1 Switch Short". DB1 faults are also reported in Attribute 158 "DB1 Fault" of the Control Supervisor Object (Class Code: 29 Hex). See *Appendix B* for Control Supervisor information.

If the ArmorStart Fault LED blinks 11x's check parameter 61. If value is 41, check the following:

- DB1 Comm Fault - Communication loss exists between the Dynamic Brake board and the main control board.

  This is also enunciated in the Trip Status parameter 4 bit 10 called Internal Comm fault.

If the ArmorStart Fault LED blinks 16x's check parameter 61. If value is 42 (DB1 Fault), check the following:

- DB1 Resistor Overtemperature Fault
- DB1 Overcurrent Fault
- DB1 Undercurrent Fault
- DB1 Open Fault
- DB1 VBus Link Fault

  This is also enunciated in the Trip Status parameter 4 bit 15 called Miscellaneous Fault.

If the ArmorStart Fault LED blinks 16x's check parameter 61. If value is 43, check the following:

- DB1 Switch Fault

The DB1 option provides the following warning:

- DB1 Thermal Warning - occurs once the resistor reaches 75% of maximum thermocapacity. Once at 100% a DB1 over temperature occurs.

When a Dynamic Brake Fault is detected a DB1 Fault code (42) is present in the "Last Pr Fault" parameter 61. It is also enunciated in the Trip Status parameter 4-bit 15 called Miscellaneous Fault.

If a communication loss exists between the Dynamic Brake board and the main control board a DB1 Comm fault code (41) is present in the "Last Pr Fault" parameter 61. It is also enunciated in the Trip Status parameter 4 bit 10 called Internal Comm fault.

DB1 Resistor Overtemperature Fault

Control Supervisor Object "DB1 Fault" Attribute Bit 0.

The DB1 measures current continuously, and models resistor body temperature based on measured current and resistor model parameters. The DB1 not only calculates the present resistor body temperature, but also predicts the future resistor body temperature. The resistor overtemperature level is based on the predicted future resistor body temperature, not on the present resistor body temperature. This fault is disabled when Parameter 182 (DB1 Resistor Sel) is "Disabled".

Troubleshooting – DB1 Resistor body temperature is too hot. Allow the resistor to cool.

DB1 Overcurrent Fault

Control Supervisor Object "DB1 Fault" Attribute Bit 1.

The DB1 compares each current measurement against the Max Current Level. If 5 consecutive samples are above the Max Current Level, then a fault is recorded. This fault is intended to notify the user if the DB1 resistance is lower than expected. This fault is disabled when Parameter 182 (DB1 Resistor Sel) is "Disabled".

Troubleshooting – DB1 monitor has measured a DB1 current higher than expected. Turn off all power to unit. Allow at least 3 minutes for capacitors to discharge.

BURN HAZARD: DB1 resistor may still be hot.

Disconnect DB1 resistor from ArmorStart control module. Measure DB1 resistor value at the connector with an ohmmeter. See the specification for minimum DB1 resistor values. If DB1 resistance value is within limits, replace control module. If not, replace DB1 resistor.

DB1 Undercurrent Fault

Control Supervisor Object "DB1 Fault" Attribute Bit 2.

The DB1 compares each current measurement against the Min Current Level. The Min Current Level = Min DB1 Voltage Level/Max DB1 Resistance. If 5 consecutive samples are below the Min Current Level and the DB1 is ON, then a fault is recorded. This fault is intended to notify the user if the DB1 resistance is higher than expected. This fault is disabled when Parameter 182 (DB1 Resistor Sel) is "Disabled".

Troubleshooting – DB1 monitor has measured a DB1 current lower than expected. Turn off all power to unit. Allow at least 3 minutes for capacitors to discharge.

BURN HAZARD: DB1 resistor may still be hot.

Disconnect DB1 resistor from ArmorStart control module. Measure DB1 resistor value at the connector with an ohmmeter. See the specification for minimum DB1 resistor values. If DB1 resistance value is within limits, replace control module. If not, replace DB1 resistor.

DB1 Switch Fault

Control Supervisor Object "DB1 Fault" Attribute Bit 3.

A DB1 Switch fault is issued when continuous DB1 resistor current is detected when the Drive Bus Voltage level is less than the DB1 Voltage Level. If 5 consecutive samples of Drive Bus Voltage less than DB1 Level is detected along with continuous DB1 resistor current flow, then a shorted DB1 IGBT fault (DB1 Switch) is recorded.

It is the user's responsibility to provide an input power contactor to each ArmorStart with a drive. The user must write logic to control (open) the input contactor to the ArmorStart in the event of a DB1 Switch Fault. The Instruction Literature provides information on how to connect the input contactor, and how to implement the logic.

Troubleshooting – Attempt to reset the fault by removing all power to the unit and restarting. If the fault persists, replace control module.

DB1 Open Fault

Control Supervisor Object "DB1 Fault" Attribute Bit 4.

A DB1 Open fault is issued when Bus Voltage is greater than the DB1 Voltage Level, and no DB1 resistor current has been detected. If 5 consecutive samples of Drive Bus Voltage greater than the DB1 Level is detected along with no DB1 resistor current flow, then an open DB1 fault is recorded. This fault is intended to notify the customer of an open DB1 resistor, or open wire. The fault is disabled when the DB1 Resistor Sel, Parameter (182) is "Disabled".

Troubleshooting – DB1 monitor expected to see current flow and measured none. Likely cause is an open DB1 resistor, loose DB1 resistor connector, or open wire in DB1 cable. Check DB1 cable connector for tightness. If problem persists, remove DB1 resistor cable connector from unit and check DB1 resistance. If DB1 resistor is open, replace DB1 resistor. Otherwise replace control module.

DB1 VBus Link Fault

Control Supervisor Object "DB1 Fault" Attribute Bit 6.

For proper operation, the DB1 monitors parameters from the Drive internally inside the ArmorStart. If the internal communications to the drive is lost, then this fault is issued. Since the DB1 can no longer provide resistor protection, the user must implement logic to open the input contactor.

Troubleshooting – Make sure that 3-phase line power and control power is applied to unit. Attempt to reset fault. If fault persists, replace control module.

DB1 Comm Fault

Control Supervisor Object "DB1 Fault" Attribute Bit 8.

The communications link is monitored continuously. If the DB1 stops responding, then the MCB issues this fault. Since the DB1 can no longer provide resistor protection, the user must implement logic to open the input contactor.

Troubleshooting – Replace control module.

DB1 Thermal Warning

Control Supervisor Object "DB1 Status" Attribute Bit 1.

A DB1 Thermal Warning is issued if the predicted future resistor body temperature is greater than the Max DB1 resistor temperature x DB1 Thermal Warning Percent.

Troubleshooting – None. DB1 resistor thermal value has exceeded the preset threshold of 90% of thermal value.

Reading the Control Supervisor Object

If a DB1 fault occurs the Control Supervisor Object provides the detailed information specific to the fault. Create an Explicit Message Instruction such as Class = 0029hex, Instance = 0001hex, Attribute = 158. A bit enumerated WORD of information is returned. See the CIP section for details.

Hardware Fault - Fan RPM Warning

FAN Fault Handling with Firmware 66.21 of 284

The Fan Fault handler was modified in firmware 66.21 of the 284.

Operation

If the RPM of the internal fan drops below the minimum threshold a Warning bit in Stater Status, Parameter 5 is set and the Warning Status, Parameter 62 Bit 13 hardware warning is set. A 24 hour count down timer begins. If the warning flag is set continuously for the 24 hr period and time expires a F14 (LED Flashes 14 times) Hardware fault occurs. In addition Last Pr Fault, Parameter 61 shows Fan RPM fault. If within the 24 hr period the fan rpm climbs above the minimum threshold the warning flags is removed and timer reset and turned off.

Starter Status, Warning Bit 5

When set to "1" indicates a Warning if a Fan RPM issue occurs. The warning bit can also be triggered by other warning type faults found in parameter 62

Warning Status, Parameter 62

Bit 13 turns to a "1" indicating a Hardware warning. Hardware warning is an OR of two warnings.

Annunciation using PLC Logic

To determine when only a Fan RPM warning occurs, logic must be written that triggers a CIP message. The DPI Alarm Object Class Code 0x0098 provides a structure of data which includes the fault code of Fan RPM (31). Create a program that monitors the Starter Status Warning bit and Warning Status Hardware bit. When they are both set to “1” the PLC code should generate a Get Single explicit message of Class 0x0098, Instance 1, and Attribute 1.

This message returns a structure of the following data:

```
Struct of:
— — Alarm Code UINT   <-----------
— — Alarm Source Struct of:
— — - -DPI Port Number USINT
— — - -Device Object Instance USINT
— — Alarm Time Stamp Struct of:
— — - -Timer Value ULINT
— — - -Timer Descriptor WORD
```

When Alarm Code UINT = 31 (decimal) this is a FAN RPM warning. For a full list of fault code references see parameter 61.

When the fault occur the following Trip bits are activated:

- Parameter 4, Trip Status, bit 13 turns to a “1” indicating a hardware trip has occurred
- Parameter 5, Starter Status, bit 0 turns to a “1” indicating a TripPresent
- Parameter 61 displays “Fan RPM” Fault 31 as the last protection fault.

Control Module Replacement (Bulletin 280, 281)

Removal of Starter Module

ATTENTION: To avoid shock hazard, disconnect main power before working on the controller, motor, or control devices

1. Disconnect from the power source
2. Remove the motor cable.
3. Loosen the four mounting screws.
4. Unplug the Control module from the base by pulling the module forward.

Installation of Control Module

1. Install the control module.
2. Tighten the four mounting screws.
3. Install the motor cable.

Figure 58 - Bulletin 280, 281 Control Module Replacement

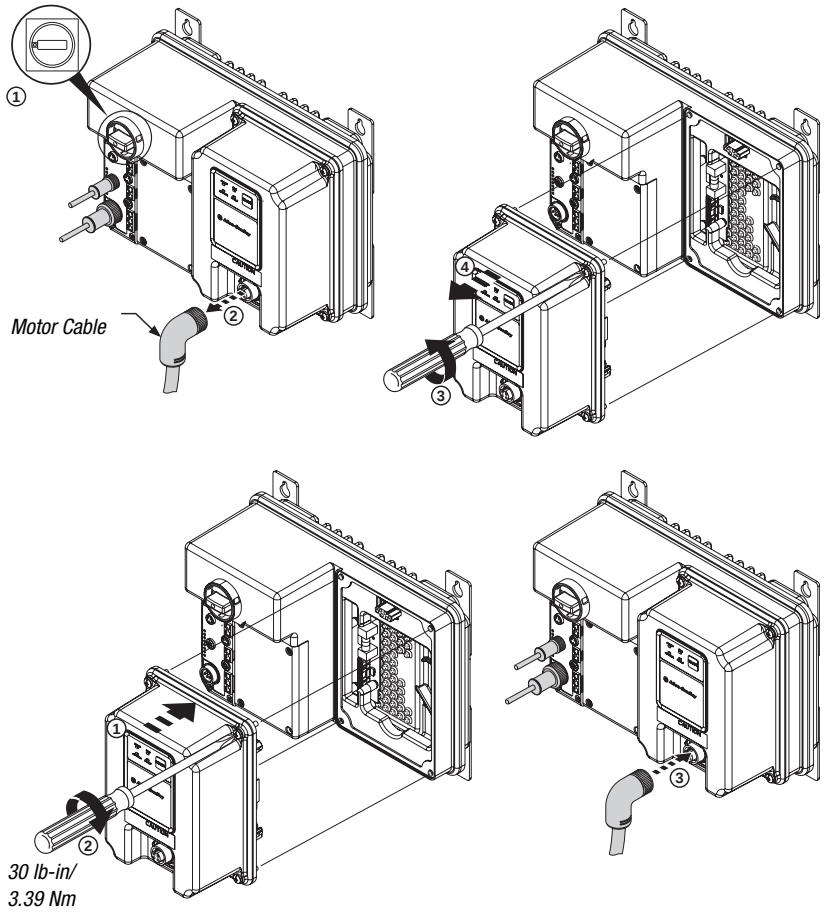

Note: DeviceNet base module is shown

Control Module Replacement (Bulletin 284)

ATTENTION: To avoid shock hazard, disconnect main power before working on the controller, motor, or control devices

Removal of Control Module

1. Disconnect from the power source
2. Remove the motor cable.
3. Loosen the four mounting screws.
4. Unplug the Control module from the base by pulling the module forward.

Installation of Control Module

1. Install the control module.
2. Tighten the four mounting screws.
3. Install all cables to the starter module.

Figure 59 - Bulletin 284 Control Module Replacement

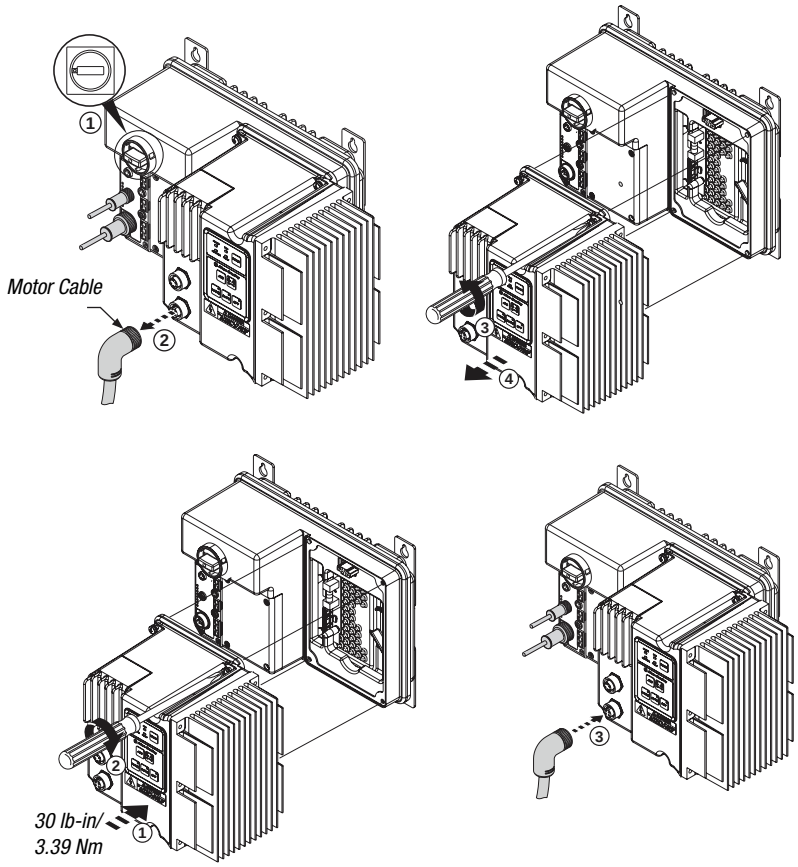

Note: DeviceNet base module is shown

Base Module Replacement (Bulletin 280, 281)

Removal of Base Module

ATTENTION: To avoid shock hazard, disconnect main power before working on the controller, motor, or control devices

1. Disconnect from the power source.
2. Remove the motor cable, communication cables, and all other cables connected to the inputs and outputs.
3. Loosen the four mounting screws on the Starter Module.
4. Unplug the Control module from the base by pulling the module forward.
5. Loosen the four mounting screws on the Terminal Access Cover Plate.
6. Remove the cover plate.
7. Loosen the terminal screws.
8. Remove all wires from the terminal block.

Figure 60 - Bulletin 280, 281 Base Module Removal

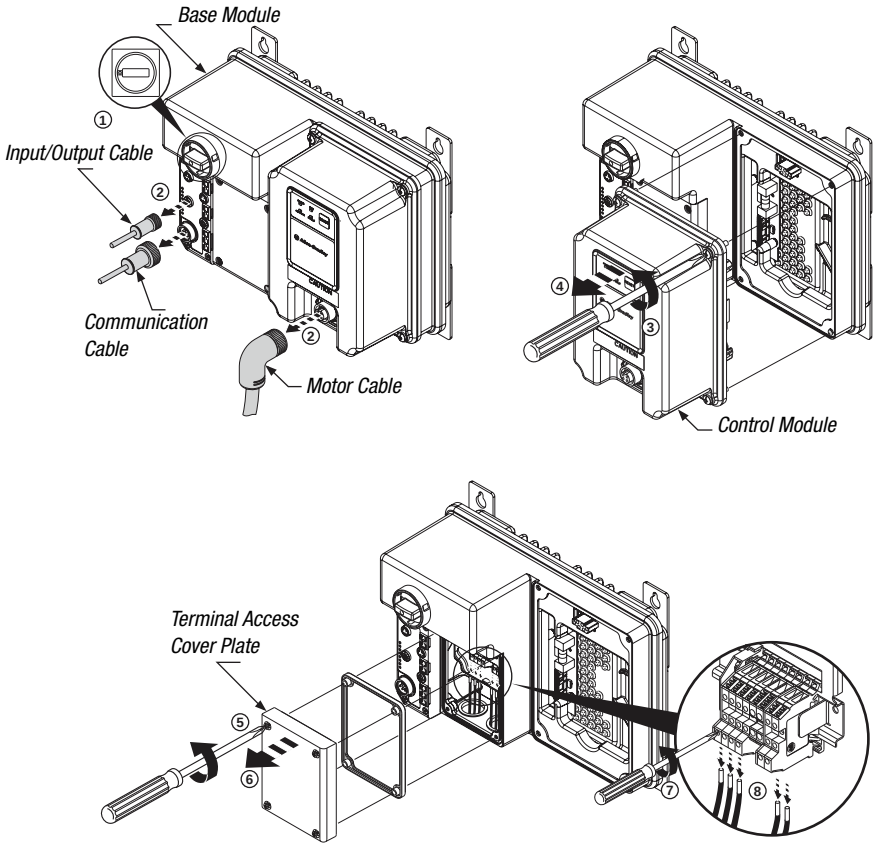

Note: DeviceNet base module is shown

Installation of Base Module

ATTENTION: To avoid shock hazard, disconnect main power before working on the controller, motor, or control devices

1. Re-install the conduit fittings and wires onto the terminal block.
2. Tighten the terminal screws.
3. Install the terminal cover plate.
4. Tighten the four mounting screws on the terminal access cover plate.
5. Install the Control Module.
6. Tighten the four mounting screws.
7. Install the motor cable, communication cables, and all other cables connected to the inputs and outputs.
8. Mount the Base Module with the four mounting screws.

Figure 61 - Bulletin 280, 281 Base Module Installation

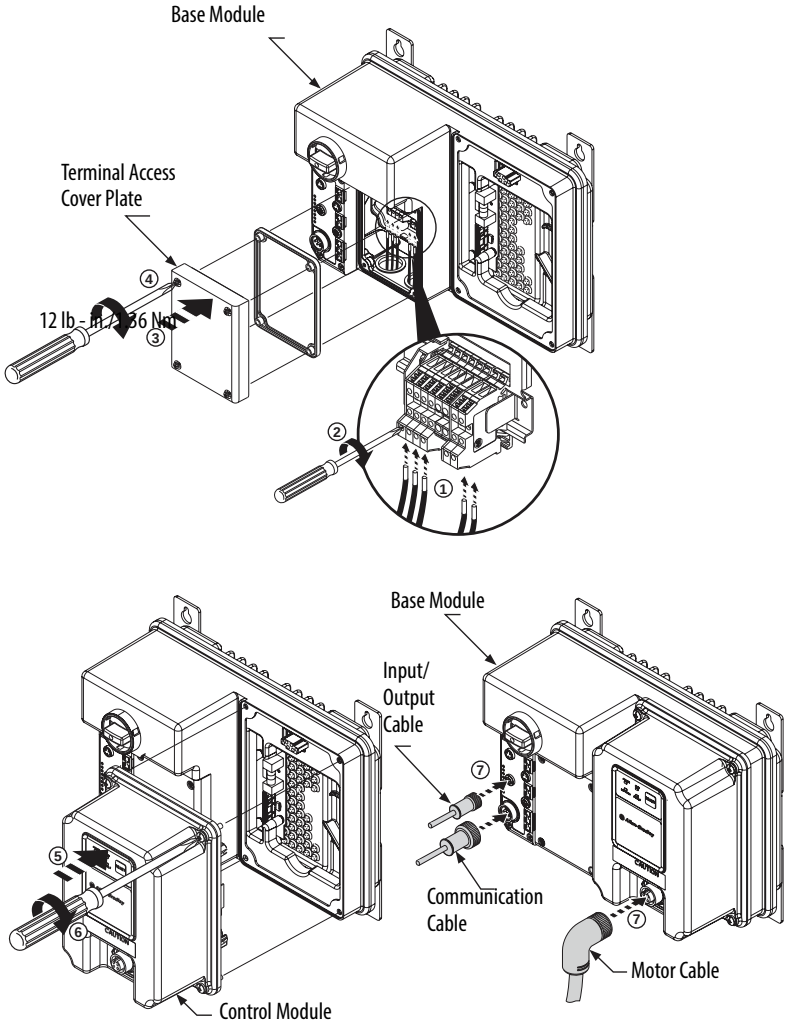

Base Module Replacement (Bulletin 284)

Removal of Base Module

ATTENTION: To avoid shock hazard, disconnect main power before working on the controller, motor, or control devices

1. Disconnect from the power source.
2. Remove all cables from Starter Module, communication cables, and all other cables connected to the inputs and outputs.
3. Loosen the four mounting screws on the Control Module.
4. Unplug the Control module from the base by pulling the module forward.
5. Loosen the four mounting screws on the Terminal Access Cover Plate.
6. Remove the cover plate.
7. Loosen the terminal screws.
8. Remove all wires from the terminal block.
9. Remove the conduit fittings.
10. Loosen the mounting screws and remove.

Figure 62 - Bulletin 284 Base Module Removal

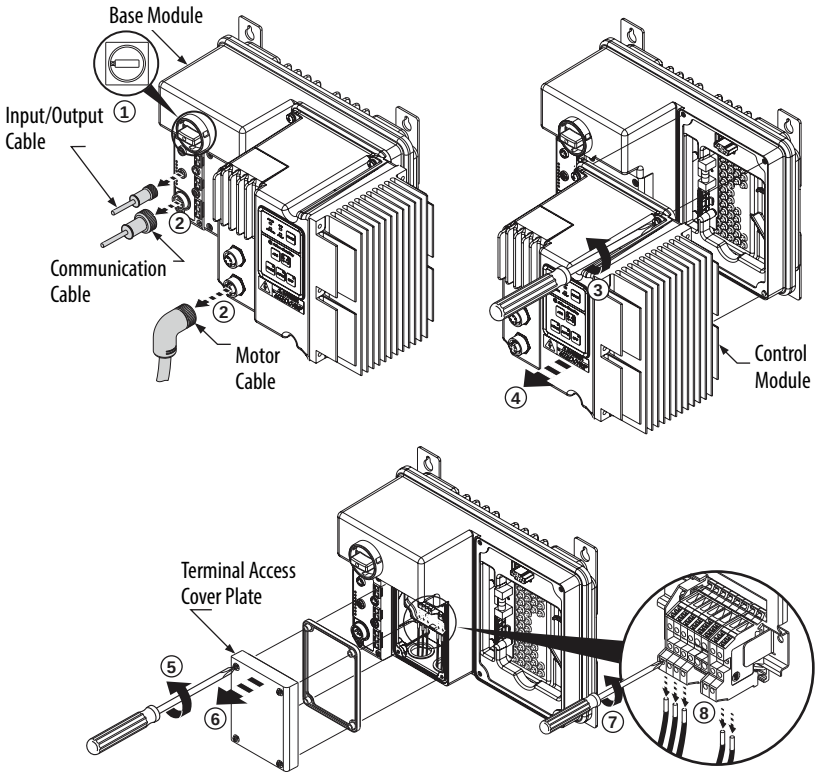

Installation of Base Module

ATTENTION: To avoid shock hazard, disconnect main power before working on the controller, motor, or control devices

1. Re-install the conduit fittings and wires onto the terminal block.
2. Tighten the terminal screws.
3. Install the terminal cover plate.
4. Tighten the four mounting screws on the terminal access cover plate.
5. Install the Control Module.
6. Tighten the four mounting screws.
7. Install all cables to the Control Module, communication cables, and all other cables connected to the inputs and outputs.
8. Mount the Base Module with the four mounting screws.

Figure 63 - Bulletin 284 Base Module Installation

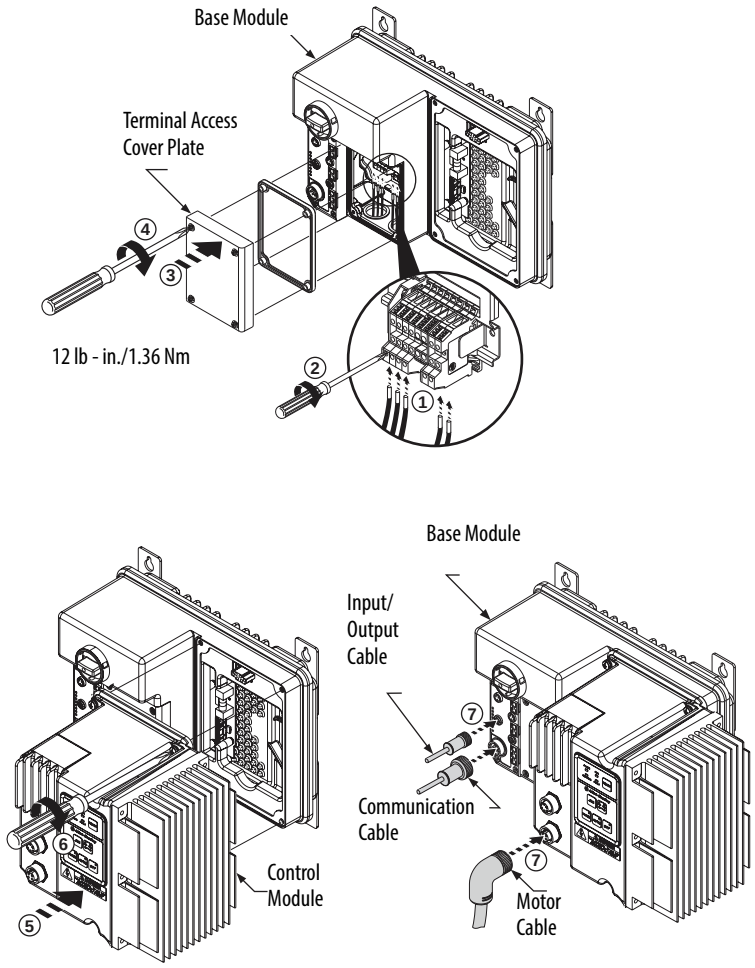

Fuse Replacement

Replace the fuses with the correct fuses.

ATTENTION: To avoid shock hazard, disconnect main power before working on the controller, motor, or control devices.

Table 47 - Control Voltage and Output Fuse Replacement

Specification	Output Fuse	Control Power Fuse
Cat. No.	25176-155-03	25172-260-17
Description	Fast-acting, high interrupting capacity tubular fuse	UL Listed Class CC,CSA HRC-1,Interupting, Rejection Feature
Current	2.5 A	7 A
Interrupting Capacity	1500 A	200 ka
Voltage Rating	250V	600V (Maximum)
Manufacturer	Littlefuse PN 021602.5	Cooper Bussman PN KTK-R-7 or Littlefuse PN KLKR007.T
Dimension [mm (in.)]	20 (0.8) x 5 (0.2)	38.1 (1.5) x 10.2 (0.4)

Figure 64 - Control Voltage and Output Fuse Replacement

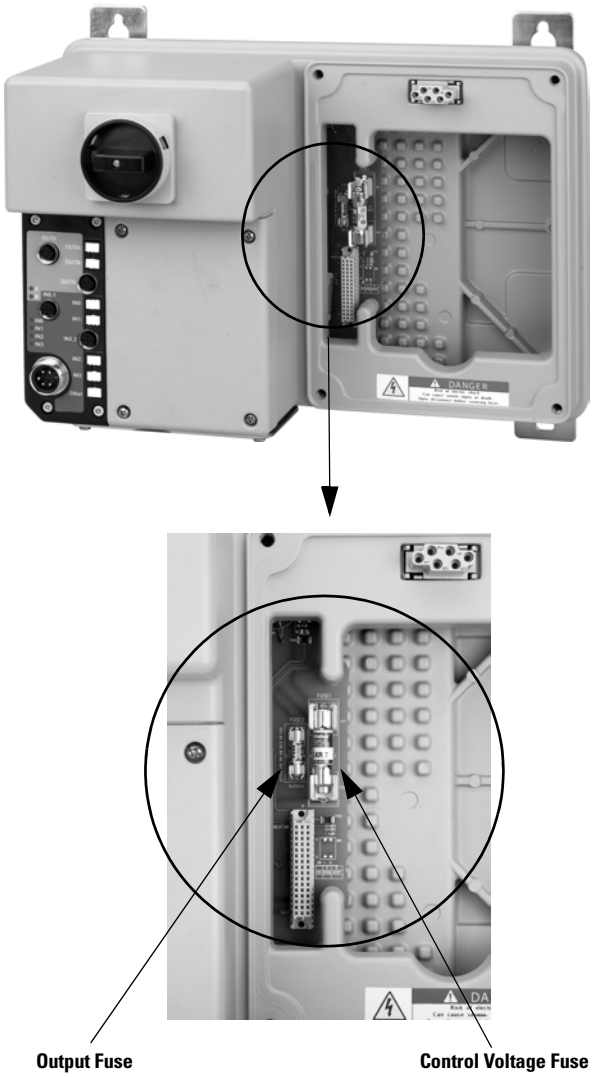

Table 48 - Source Brake Fuse Replacement (Bulletin 284 only)

Specification	Source Control Brake Fuse
Cat. No.	W25172-260-12
Description	3.0A UL Listed Class CC,CSA HRC-1, Rejection Feature
Current	3.0A
Interrupting Capacity	200ka
Voltage Rating	600V (Maximum)
Manufacturer	Cooper Bussman PN KTK-R-3 or Littlefuse PN KLKR003.T
Dimension mm (in.):	38.1 (1.5) x 10.2 (0.4)

Figure 65 - Source Brake Fuse Replacement (Bulletin 284 only)

Source/ Control Brake Fuses

Notes:

Specifications

Bulletin 280, 281

Electrical Ratings		UL/NEMA		IEC
Power Circuit	Rated Operation Voltage	200…575V		200…575V
	Rate Insulation Voltage	600V		600V
	Rated Impulsed Voltage	6 kV		6 kV
	Dielectric Withstand	2200V AC		2500V AC
	Operating Frequency	50/60 Hz		50/60 Hz
	Utilization Category	N/A		AC-3
	Protection Against Shock	N/A		IP2X
	Rated Operating Current Max.	280_-_____-10A-* ❶	1.2 A	
		280_-_____-10B-* ❶	2.5 A	
		280_-_____-10C-* ❶	5.5 A	
		280_-_____-25D-* ❶	16 A	
Control Circuit	Rated Operation Voltage	24V DC (+10%, –15%) A2 (should be grounded at voltage source)		
		120V AC (+10%, -15%) A2 (should be grounded at voltage source)		
		240V AC (+10%, -15%) A2 (should be grounded at voltage source)		
	Rate Insulation Voltage	250V		250V
	Rated Impulsed Voltage	—		4kV
	Dielectric Withstand	1500V AC		2000V AC
	Overvoltage Category	—		III
	Operating Frequency	50/60 Hz		50/60 Hz

		Gland Type	Current Rating	Short Circuit Protection		480Y/277V		480V
Short Circuit Protection	Short Circuit Protection Device (SCPD) Performance Type 1	Any CR or DR	0.24…1.2 A	10A, 10B, 10C	**Sym. Amps rms**	65 kA		65 kA
			0.5…2.5 A		**Max. Circuit Breaker** ❺	100 A		60 A
			1.1…5.5 A		**Max. Fuse**	100 A		60 A
			3.2…16 A	25D	**Sym. Amps rms**	30 kA		30 kA
					Max. Circuit Breaker ❺	100 A		60 A
					Max. Fuse	100 A		60 A
		Any RR	0.24…1.2 A	10A, 10B, 10C	**Sym. Amps rms**	45 kA	65 kA	65 kA
			0.5…2.5 A		**Max. Circuit Breaker** ❻	30 A ❸	N/A	N/A
			1.1…5.5 A		**Max. Fuse** **- Non-time Delay** ❷ **- Time Delay** ❷	40 A 20 A	40 A 20 A	40 A 20 A
			3.2…16 A	25D	**Sym. Amps rms**	N/A	30 kA	30 kA
					Max. Circuit Breaker ❻	N/A	100 A ❹	60 A ❹
					Max. Fuse ❷	N/A	100 A	60 A
	SCPD List	Size per NFPA 70 (NEC) or NFPA 79 for Group Motor Applications						

❶ See Contactor Life Load Curves on page 283
❷ Type J, CC, and T fuses only.
❸ Only when used with Bulletin 140U-H frame.
❹ Only when used with Cat. No. 140U-D6D3-xxx frame or smaller.
❺ Bulletin 140U-H or 140G-H circuit breaker, not rated more than 480V, 100 A and a maximum interrupt of 65 000 RMS symmetrical amperes.
❻ When protected by Cat. No. 140U-D6D3-xxx circuit breaker, not rated more than 480/277V, 30 A, having an interrupt rating not less than 45 000 RMS symmetrical amperes .

Power Requirements							
	Units	**W/O HOA**			**W/ HOA**		
Control Voltage	Volts	24V DC	120V AC	240V AC	24V DC	120V AC	240V AC
Control (Pick Up) [1]	Amps	0.71	0.583	0.292	0.71	0.583	0.292
Control (Hold In)	Amps	0.63	0.075	0.038	0.063	0.075	0.038
Total Control Power (Pick Up) [1]	VA (W)	(17.0 W)	70	70	(21.0 W)	83	84
Total Control Power (Hold In)	VA (W)	(1.5 W)	9	9	(5.6 W)	22	23

[1] There is an instantaneous capacitive inrush of over 20 A. The selected power supply should have short time power boost capability.

External Devices powered by Control Voltage							
Outputs (2) 1 A max. each)	Amps	2	2	2	2	2	2
Total Control (Pick Up) with max. outputs	VA (W)	(65.0 W)	310	550	(73.0 W)	336	579
Total Control (Hold In) with max. outputs	VA (W)	(50.0 W)	249	489	(58.0 W)	275	518

Electrical Ratings		UL/NEMA	IEC
Input Ratings	Rated Operation Voltage	24V DC	
	Input On-State Voltage Range	10…26V DC	
	Input On-state Current	3.0 mA @ 10V DC	
		7.2 mA @ 24V DC	
	Input Off-state Voltage Range	0…5V DC	
	Input Off-state Current	<1.5 mA	
	Input Filter — Software Selectable		
	Off to On	Settable from 0…64 ms in 1 ms increments	
	On to Off	Settable from 0…64 ms in 1 ms increments	
	Input Compatibility	N/A	IEC 1133 Type 1+
	Number of inputs	4	
	Sensor Source		
	Voltage Status Only	11…25V DC from DeviceNet	
	Current Available	50 mA MAX per Input, 200 mA Total	
Output Ratings (Sourced from Control Circuit)	Rated Operation Voltage	240V AC / 30V DC	240V AC / 30V DC
	Rate Insulation Voltage	250V	250V
		50/60 Hz	50/60 Hz
	Type of control circuit	Electromechanical Relay	
	Kind of Current	AC/DC (not to be used as an AC/DC power supply)	
	Conventional Thermal Current I_{th}	Total of both outputs ≤ 2 A	
	Type of Contacts	Normally Open (N.O.)	
	Number of Contacts	2	
	Service Life Mechanical	50M operations (18K operations/hr)	
	Electrical	100K operations (1.8K operations/hr)	

Maximum Switching Capacity

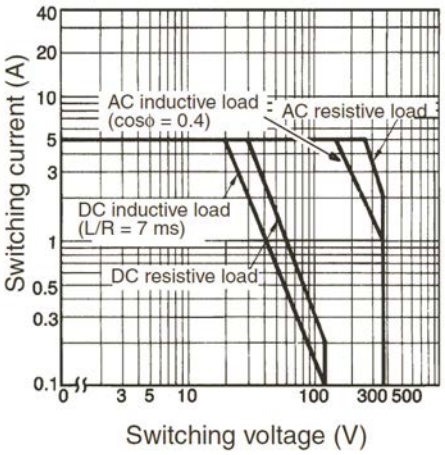

Electrical Service Life

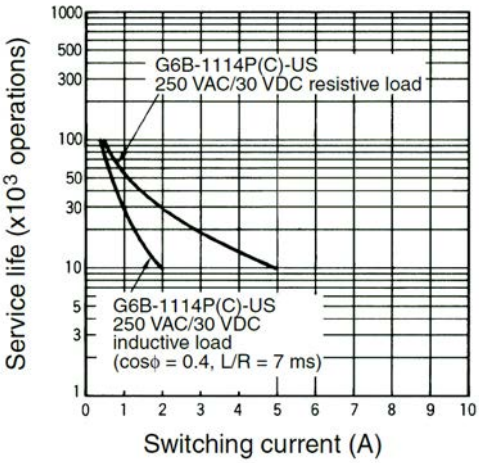

		UL/NEMA		IEC
Environmental	Operating Temperature Range	–20…40 °C (–4…104 °F)		
	Storage and Transportation Temperature Range	–25….85 °C (–13…185 °F)		
	Altitude ❶	2000 m		
	Humidity	5…95% (on-condensing)		
	Pollution Degree	3		
	Enclosure Ratings	NEMA 4/12		IP67
	Approximate Shipping Weight	10.4 kg (23 lb)		
Mechanical	**Resistance to Shock**			
	Operational	15 G		
	Non-Operational	30 G		
	Resistance to Vibration			
	Operational	1 G, 0.15 mm (0.006 in.) Displacement		
	Non-Operational	2.5 G, 0.38 mm (0.015 in.) Displacement		
	Power and Ground Terminals			
	Wire Size	Primary/Secondary Terminal: #16…#10 AWG		Primary/Secondary Terminal: 1.0…4.0 mm^2
	Tightening Torque	Primary Terminal: 10.8 lb·in. Secondary Terminal: 4.5 lb·in.		Primary Terminal: 1.2 N·m Secondary Terminal: 0.5 N·m
	Wire Strip Length	0.35 in. (9 mm)		
	Control Terminals			
	Wire Size	#18…#10 AWG		1.0…4.0 mm^2
	Tightening Torque	6.2 lb·in.		0.7 N·m
	Wire Strip Length	0.35 in. (9 mm)		
	Disconnect Lock Out	Recommend 8 mm (5/16 in.) lock shackle or hasp. The hasp should not exceed 8 mm (5/16 in.) when closed.		
Contactor Mechanical Life	**CatNo 100-**	**Ops**	**C12 (AC3)**	**C23 (AC3)**
	280/1_-_12*	Mil	**13**	**—**
	280/1_-_23*	Mil	**—**	**13**

❶ See Altitude Derating on page 292 for derating guide.

Other Rating	**EMC Emission Levels**	
	Conducted Radio Frequency Emissions	Class A
	Radiated Emissions	Class A, Group 1, Equivalent to C2 emissions
	EMC Immunity Levels	
	Electrostatic Discharge	4 kV contact and 8 kV Air
	Radio Frequency Electromagnetic Field	10V/m
	Fast Transient	2 kV
	Surge Transient	1 kV L-L, 2 kV L-N (Earth)
	Overload Characteristics	
	Overload Current Range	0.5…2.5 A
		1.1…5.5 A
		3.2…16 A
	Trip Classes ❶	10, 15, 20
	Trip Rating	120% of FLC setting
	Number of poles	3
	DeviceNet Specifications	
	DeviceNet Supply Voltage Rating	Range 11…25V DC, 24V DC Nominal
	DeviceNet Input Current	167 mA @ 24V DC - 4.0 W
		364 mA @ 11V DC - 4.0 W
	External Devices powered by DeviceNet	Sensors Inputs 4 * 50 mA - total 200 mA
	Total w/max. Sensor Inputs (4)	367 mA @ 24V DC - 8.8 W
	DeviceNet Input Current Surge	15 A for 250 µs
	DeviceNet Communications	
	Baud Rates	125, 250, 500 kbps
	Maximum Distance	500 m (1630 ft) @ 125 kbps
		200 m (656 ft) @ 250 kbps
		100 m (328 ft) @ 500 kbps
	Certifications	cULus (File No. E3125) UL 508 EN/IEC 60947-4-1 CE Marked per Low Voltage Directive 73/23/EEC and EMC Directive 89/336/EEC

❶ Refer to Motor Overload Trip Curves on page 282

Pinout Diagrams

Figure 66 - External Connections for Input Connector

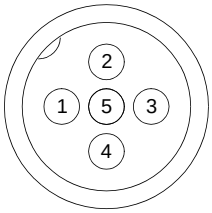

Pin 1: +V Out
Pin 2: Input
Pin 3: Comm
Pin 4: Input
Pin 5: NC (No Connection)

Figure 67 - External Connections for Output Connector

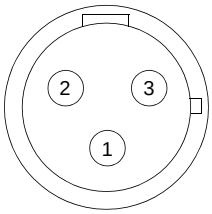

Pin 1: PE
Pin 2: Return
Pin 3: Relay Out

Figure 68 - External Connections for DeviceNet Connector

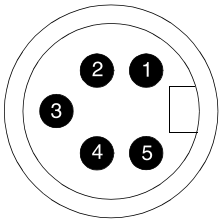

Pin 1: Drain (Not Connected)
Pin 2: + VDNET
Pin 3: -VDNET
Pin 4: CAN_H
Pin 5: CAN_L

Figure 69 - External Connections for Motor Connector (≤ 3 Hp @ 460V AC)

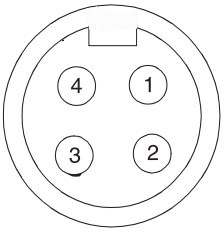

Pin 1: T1 - Black
Pin 2: T2 - White
Pin 3: T3 - Red
Pin 4: Ground - Green/Yellow

Figure 70 - External Connections for Motor Connector (> 3 Hp @ 460V AC)

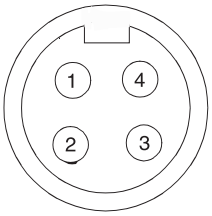

Pin 1: T1 - Black
Pin 2: Ground - Green/Yellow
Pin 3: T3 - Red
Pin 4: T2 - White

Motor Overload Trip Curves

Motor overload current parameter provides class 10,15, and 20 overload protection. Ambient insensitivity is inherent in the electronic design of the overload.

Figure 71 - Overload Trip Curves

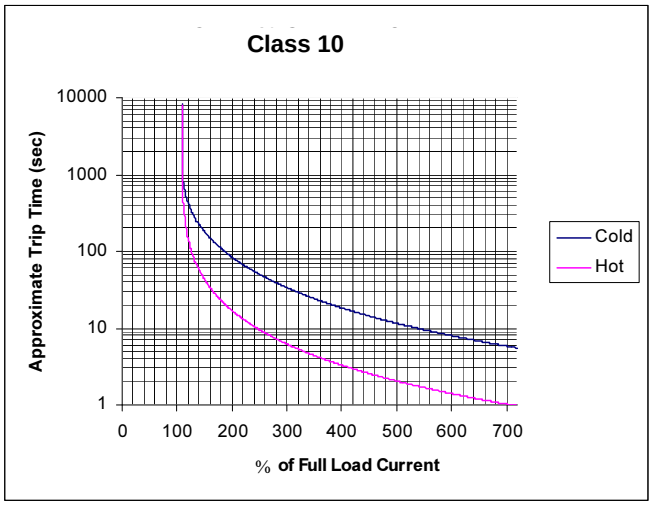

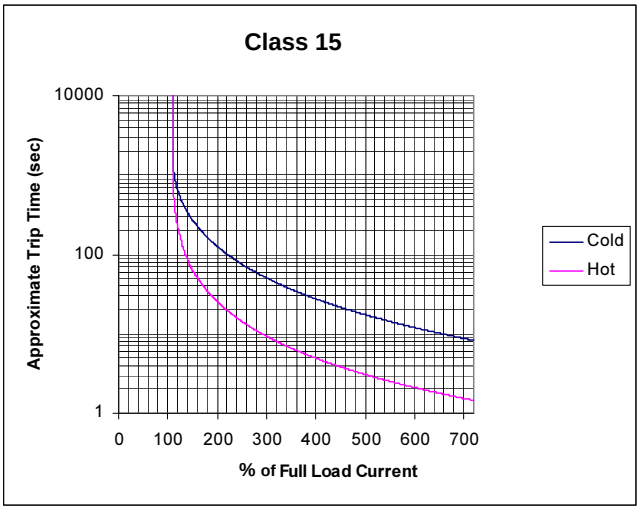

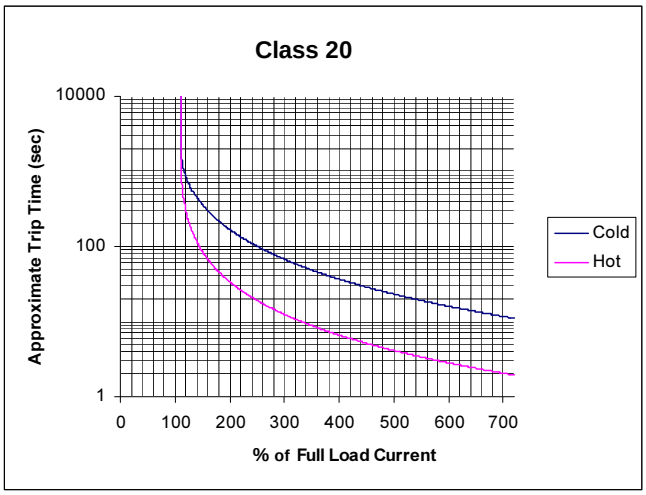

Note: For 280 and 281, if an overload fault occurs it may require 60 s or more before a fault reset is allowed. Refer to Overload Class Parameter 107, Thermo-Utilization parameter 105, and OL Reset Level parameter 108 to adjust the reset time.

Note: For 280 and 281, when the mechanical motor brake voltage is applied using power from the load side of the ArmorStart controller, this current adds to the load and may result in a phase imbalance or overload if the FLA of the motor and the brake current are similar in scale.

Contactor Life Load Curves

280/1_-_12* = 100-C12*
280/1_-_23* = 100-C23*

Life Load Curves:
AC-3 Switching of squirrel-cage motors while starting
$U_e = 230 \ldots 400 \ldots 460V$

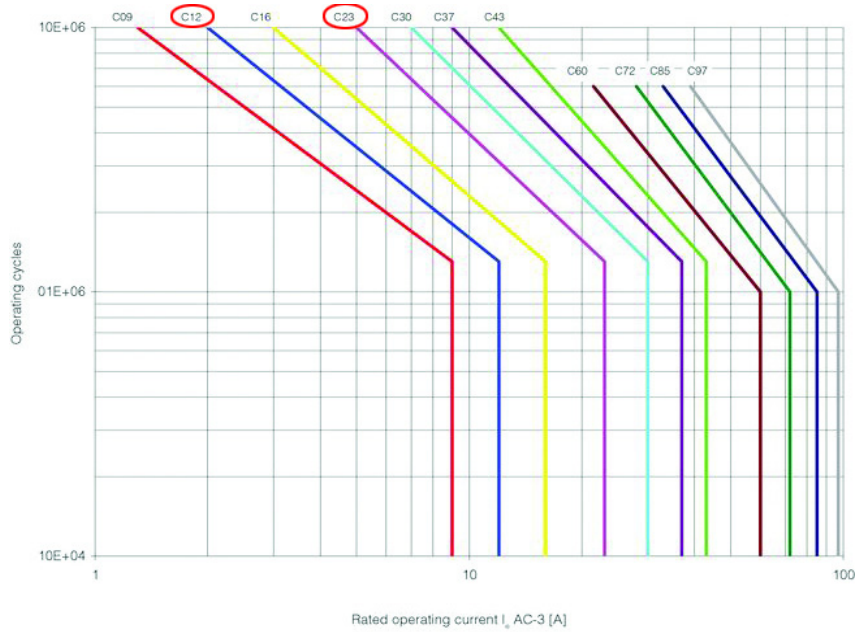

AC-3 & AC-4 10% AC-4 Mixed operation of squirrel-cage motors
$U_e = 400 \ldots 460V$

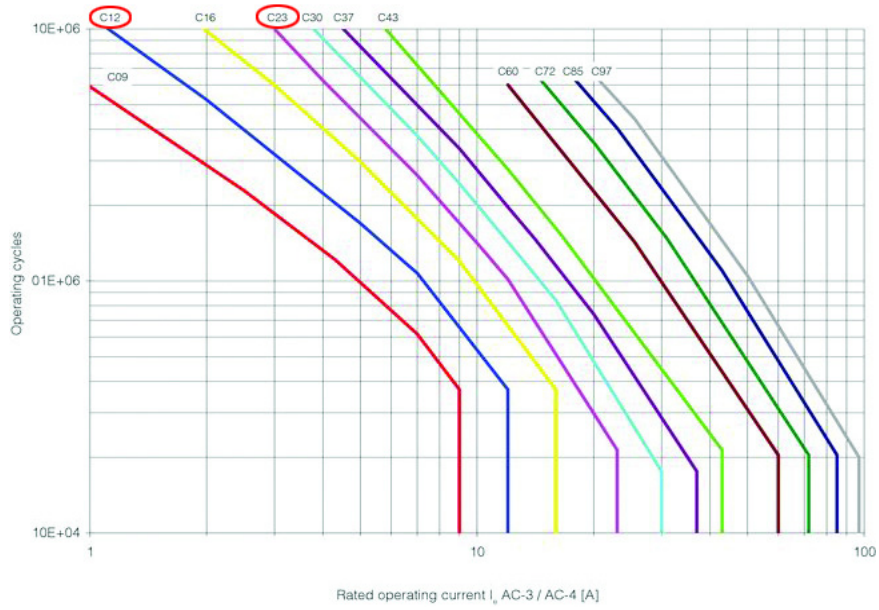

Maximum Operating Rates:
AC-3 Switching of squirrel-cage motors while starting
U_e = 230. . .460V, Relative operating time 40%, Starting time tA = 0.25 s

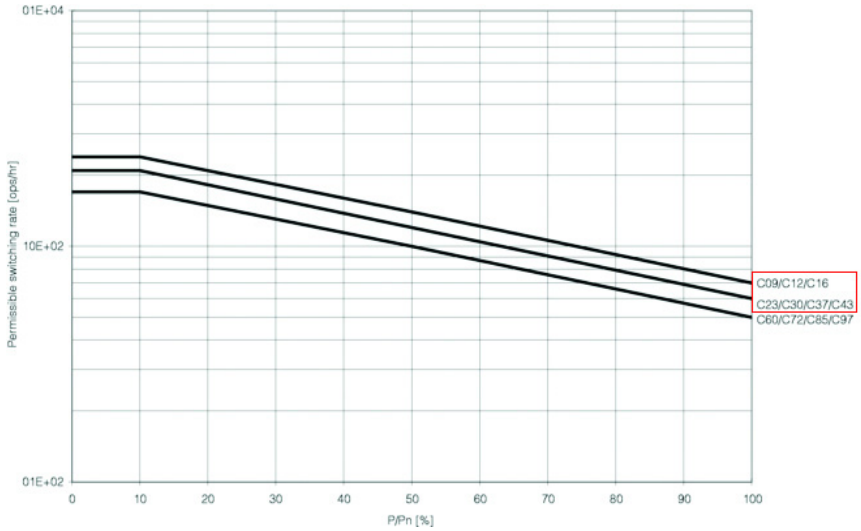

AC-4 Inching of squirrel-cage motors
Ue = 230. . .460V, Starting time tA = 0.25 s

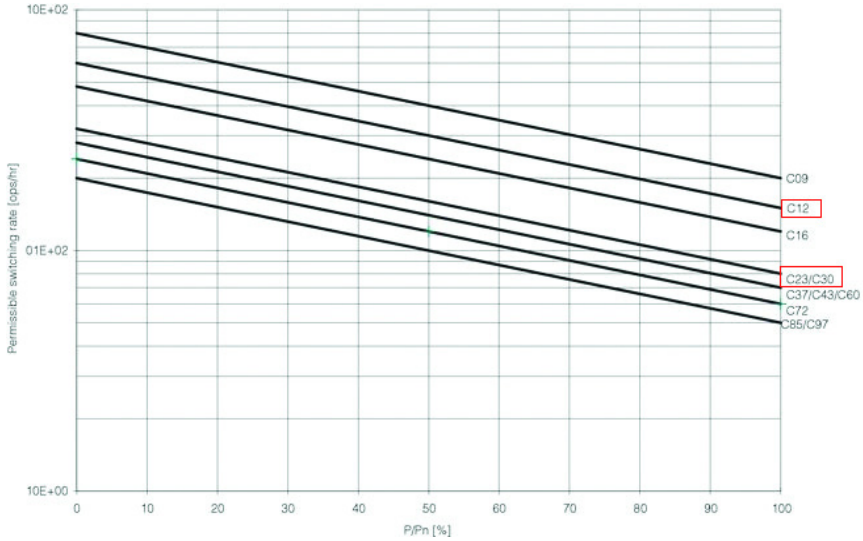

Bulletin 284

Electrical Ratings		UL/NEMA			IEC		
Power Circuit	Rated Operation Voltage	200V. . .480V			200. . .480V		
	Rate Insulation Voltage	600V			600 V		
	Rated Impulsed Voltage	6 kV			6 kV		
	Dielectric Withstand	2200V AC			2500V AC		
	Operating Frequency	50/60 Hz			50/60 Hz		
	Utilization Category	N/A			AC-3		
	Protection Against Shock	N/A			IP2X		
	Rated Max. Output Operating Current	**SVC - Performance**					
				3-phase Hp Rating	**Output Current [A]**		
		284E-FVD1P4Z*		0.5	1.4		
		284E-FVD2P3Z*		1	2.3		
		284E-FVD4P0Z*		2	4		
		284E-FVD6P0Z*		3	6		
		284E-FVD7P6Z*		5	7.6		
Short Circuit Protection	SCPD Performance	**Current Rating**	**Voltage**	480Y/277V	480/480V	600Y/347V	600V
		10 A	Sym. Amps RMS	65 kA	65 kA	30 kA	30 kA
		25 A		30 kA	30 kA	30 kA	30 kA
	SCPD List	Size per NEC Group Motor			—		
Control Circuit	Rated Operation Voltage	24V DC (+10%, -15%) A2 (should be grounded at voltage source)					
		120V AC (+10%, -15%) A2 (should be grounded at voltage source)					
		240V AC (+10%, -15%) A2 (should be grounded at voltage source)					
	Rate Insulation Voltage	250V			250V		
	Rated Impulsed Voltage	—			4 kV		
	Dielectric Withstand	1500V AC			2000V AC		
	Overvoltage Category	—			III		
	Operating Frequency	50/60 Hz			50/60 Hz		

Power Supply Requirements										
	Units	**No Options**			**Brake or Output Contactor**			**With Brake and Output Contactor**		
Control Voltage	Volts	24V DC	120V AC	240V AC	24V DC	120V AC	240V AC	24V DC	120V AC	240V AC
Nominal Control (Pick Up ❶)	VA (W)	(11.0 W)	16	24	(13.0 W)	38	46	(16.0 W)	60	68
Nominal Control (Hold In)	VA (W)	(11.0 W)	16	24	(13.0 W)	20	28	(16.0 W)	24	32
External Devices powered by Control Voltage										
Outputs (2) 1 A max. each	Amps	2	2	2	2	2	2	2	2	2
Nominal Control VA (Pick Up ❶) with max. outputs	VA (W)	(59.0 W)	267	504	(61.0 W)	278	548	(64.0 W)	300	548
Nominal Control VA (Hold In) with max. outputs	VA (W)	(59.0 W)	267	504	(61.0 W)	278	512	(64.0 W)	264	512

❶ There is an instantaneous capacitive inrush of over 20 A. The selected power supply should have short time power boost capability.

Input Ratings	Rated Operation Voltage	24V DC	
	Input On-State Voltage Range	10…26V DC	
	Input On-state Current	3.0 mA @ 10V DC	
		7.2 mA @ 24V DC	
	Input Off-state Voltage Range	0…5V DC	
	Input Off-state Current	<1.5 mA	
	Input Filter — Software Selectable		
	Off to On	Settable from 0…64 ms in 1 ms increments	
	On to Off	Settable from 0…64 ms in 1 ms increments	
	Input Compatibility	N/A	IEC 1133 Type 1+
	Number of inputs	4	
	Sensor Source		
	Voltage Status Only	11…25V DC from DeviceNet	
	Current Available	50 mA maximum per Input, 200 mA total	
Output Ratings (Sourced from Control Circuit)	Rated Operation Voltage	240V AC / 30V DC	240V AC / 30V DC
	Rate Insulation Voltage	250V	250V
	Dielectric Withstand	1500V AC	2000V AC
	Operating Frequency	50/60 Hz	50/60 Hz
	Type of control circuit	Electromechanical Relay	
	Kind of Current	AC/DC	
	Conventional Thermal Current I_{th}	Total of both outputs ≤ 2 A	
	Type of Contacts	Normally Open (N.O.)	
	Number of Contacts	2	

		UL/NEMA	IEC
Environmental	Operating Temperature Range	–20…40 °C (–4…104 °F)	
	Storage and Transportation Temperature Range	–25….85 °C (–13…185 °F)	
	Altitude ❶	1000 m	
	Humidity	5…95% (on-condensing)	
	Pollution Degree	3	
	Enclosure Ratings	NEMA 4/12/13 or NEMA 4X	IP67 or IP69K
	Approximate Shipping Weight	19.1 kg (42 lb)	
Mechanical	Resistance to Shock		
	Operational	15 G	
	Non-Operational	30 G	
	Resistance to Vibration		
	Operational	1 G, 0.15 mm (0.006 in.) Displacement	
	Non-Operational	2.5 G, 0.38 mm (0.015 in.) Displacement	
	Power and Ground Terminals		
	Wire Size	Primary/Secondary Terminal: #16…#10 AWG	Primary/Secondary Terminal: 1.5…4.0 mm^2
	Tightening Torque	Primary Terminal: 10.8 lb·in. Secondary Terminal: 4.5 lb·in.	Primary Terminal: 1.2 N·m Secondary Terminal: 0.5 N·m
	Wire Strip Length	9 mm (0.35 in.)	
	Control and Safety Monitor Inputs		
	Terminal Wire Size	#18…#10 AWG	1.0…4.0 mm^2
	Tightening Torque	6.2 lb·in.	0.7 N·m
	Wire Strip Length	9 mm (0.35 in.)	
	Disconnect Lock Out	Recommend 8 mm (5/16 in.) lock shackle or hasp. The hasp should not exceed 8 mm (5/16 in.) when closed.	

❶ See Altitude Derating on page 292 for derating guide.

Other Rating	**EMC Emission levels**	
	Conducted Radio Frequency Emissions	Class A
	Radiated Emissions	Class A, Group 1, Equivalent to C2 emissions
	EMC immunity levels	
	Electrostatic Discharge	4 kV contact and 8 kV Air
	Radio Frequency Electromagnetic Field	10 V/m
	Fast Transient	2 kV
	Surge Transient	1 kV L-L, 2 kV L-N (Earth)
	Overload Characteristics	
	Trip Class	10
	Overload Protection	I^2t overload protection - 150% for 60 seconds, 200% for 30 seconds
	Number of poles	3
	DeviceNet Specifications	
	DeviceNet Supply Voltage Rating	Range 11…25V DC, 24V DC Nominal
	DeviceNet Input Current	167 mA @ 24V DC - 4.0 W
		364 mA @ 11V DC - 4.0 W
	External Devices powered by DeviceNet	Sensors Inputs 4 * 50 mA - total 200 mA
	Total w/max. Sensor Inputs (4)	367 mA @ 24V DC - 8.0 W
	DeviceNet Input Current Surge	15 A for 250 µs
	DeviceNet Communications	
	Baud Rates	125, 250, 500 kbps
	Distance Maximum	500 m (1630 ft) @ 125 kbps
		200 m (656 ft) @ 250 kbps
		100 m (328 ft) @ 500 kbps
	Certifications	cULus (File No. E207834) UL 508C EN 50178, EN 61800-3, EN 60947-1 CE Marked per Low Voltage Directive 73/23/EEC and EMC Directive 89/336/EEC
	Internal Fan	Fan L10 Operation data: 80K hours at 40C and 98K hours at 25 °C (77 °F) ambient

	Line Voltage	Frequency	3-Phase kW Rating	3-Phase Hp Rating	Output Current (A)	Input Current (A)
Drive Ratings	200	50	0.4	—	2.3	3.65
			0.75	—	4.5	6.40
			1.5	—	7.6	10.65
	230	60	—	0.5	2.3	3.10
			—	1	4.5	5.70
			—	2	7.6	9.45
	380	50	0.4	—	1.4	2.15
			0.75	—	2.3	3.80
			1.5	—	4.0	6.40
			2.2	—	6.0	9.00
			3.0	—	7.6	12.40
	460	60	—	0.5	1.4	1.85
			—	1	2.3	3.45
			—	2	4.0	5.57
			—	3	6.0	8.20
			—	5	7.6	12.5
	575	60	—	1	1.7	2.78
			—	2	3.0	4.73
			—	3	4.2	6.64
			—	5	6.6	10.75

Drive Characteristics	Output Frequency	0…400 Hz (Programmable)
	Efficiency	97.5% (Typical)
Sensorless Vector Control	Maximum (kW) Hp Rating/Input Voltage	5 Hp (3.3 kW)/480V AC
	Preset Speeds	8
	Skip Frequency	✓
	StepLogic® Functionality	✓
	Timer/Counter Functions	✓

Sensorless Vector Control (SVC)

Control Specifications – Sensorless Vector Control	Carrier Frequency	2…16 kHz. Drive rating is based on 4 kHz.
	Frequency Accuracy – Digital Input	Within ±0.05% of set output frequency.
	Speed Regulation – Open Loop with Slip Compensation	±1% of base speed across a 60:1 speed range
	Stop Modes	Multiple programmable stop modes including – Ramp, Coast, DC-Brake, Ramp-to-Hold and S Curve.
	Accel/Decel	Two independently programmable accel and decel times. Each time may be programmed from 0…600 s in 0.1 s increments.
	Electronic Motor Overload Protection	Class 10 protection with speed sensitive response

	Drive Rating			Minimum DB Resistance
	Input Voltage	[kW]	[Hp]	[Ω]
Minimum DB Resistance	480V, 50/60 Hz, Three-Phase	0.4	0.5	97
		0.75	1	97
		1.5	2	97
		2.2	3	97
		4.0	5	77

IP Dynamic Brake Resistor Ratings

Table 49 - IP67 Dynamic Brake Resistor

Drive and Motor Size kW	Part Number	Resistance Ohms ± 5%	Continuous Power kW	Max Energy kJ	Max Braking Torque % of Motor	Application Type 1		Application Type 2	
						Braking Torque % of Motor	Duty Cycle %	Braking Torque % of Motor	Duty Cycle %
200…240V AC Input Drives									
0.37 (0.5)	284R-091P500	91	0.086	17	293%	100%	46%	150%	31%
0.75 (1)	284R-091P500	91	0.086	17	218%	100%	23%	150%	15%
1.5 (2)	284R-091P500	91	0.086	17	109%	100%	11%	109%	11%
400…480V AC Input Drives									
0.37 (0.5)	284R-360P500	360	0.086	17	305%	100%	47%	150%	31%
0.75 (1)	284R-360P500	360	0.086	17	220%	100%	23%	150%	15%
1.5 (2)	284R-360P500	360	0.086	17	110%	100%	12%	110%	11%
2.2 (3)	284R-120P1K2	120	0.26	52	197%	100%	24%	150%	16%
4 (5)	284R-120P1K2	120	0.26	52	124%	100%	13%	124%	10%

Note: Always check the resistor ohms against minimum resistance for drive being used.

Note: Duty Cycle listed is based on full speed to zero speed deceleration. For constance regen at full speed, duty cycle capability is half of what is listed. Application Type 1 represents maximum capability up to 100% braking torque where possible. Application Type 2 represents more than 100% braking torque where possible, up to a maximum of 150%.

Pinout Diagrams

Figure 72 - External Connections for Input Connector

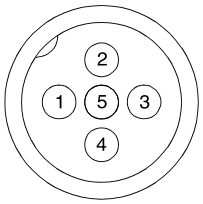

Pin 1: +V Out
Pin 2: Input 1 or 3
Pin 3: Comm
Pin 4: Input 0 or 2
Pin 5: NC (No Connection)

Figure 73 - External Connections for Output Connector

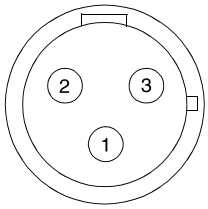

Pin 1: PE
Pin 2: Return
Pin 3: Relay Out

Figure 74 - External Connections for DeviceNet Connector

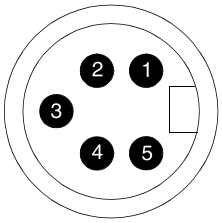

Pin 1: Drain (Not Connected)
Pin 2: + VDNET
Pin 3: -VDNET
Pin 4: CAN_H
Pin 5: CAN_L

Figure 75 - External Connections for Motor Connector

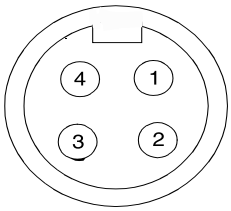

Pin 1: T1 - Black
Pin 2: T2 - White
Pin 3: T3 - Red
Pin 4: Ground - Green

Figure 76 - External Connections for Control/Source Brake Connector

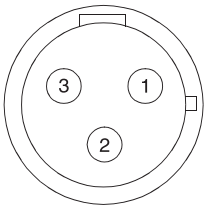

Pin 1: L1 - Black
Pin 2: GND - Green/Yellow
Pin 3: L2 - White

Figure 77 - External Connections for Dynamic Brake Connector

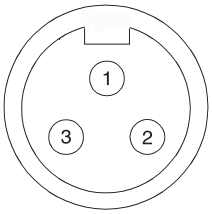

Pin 1: GND - Green/Yellow
Pin 2: BR+ - Black
Pin 3: BR- - White

Figure 78 - External Connections for 0…10V Analog Input

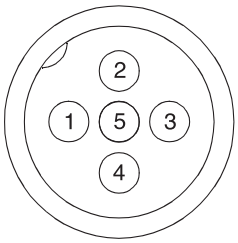

Pin 1: 10V DC
Pin 2: 0…10V Input
Pin 3: Analog Common
Pin 4: Analog Output
Pin 5: RS485 Shield

Overload Curves

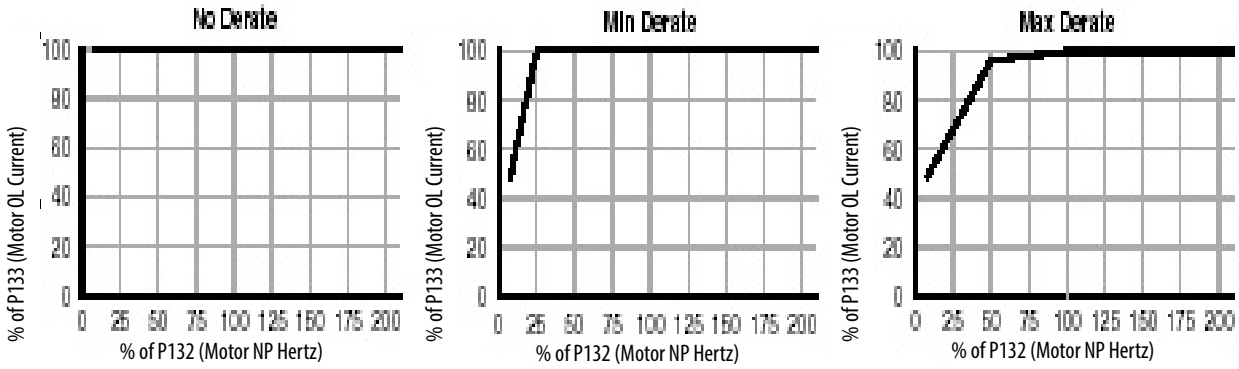

Altitude Derating

Altitude Rating for Bulletin 280, 281

- No altitude derating up to 2000 m (6562 ft)

Altitude Rating for Bulletin 284

- **0.5 Hp:** No Derating up to 3000 m (9843 ft)
- **1 Hp:** No Derating up to 3000 m (9843 ft)
- **2 Hp:** Derate 1% per 100 m (328 ft) above 1000 m (3281 ft)
- **3 Hp:** No Derating up to 3000 m (9843 ft)
- **5 Hp:** Derate 1% per 100 m (328 ft) above 1000 m

Example: Application requires 2600 m for a 5Hp ArmorStart

- 2600 m-1000 m= 1600 m
- 1600/100 = 16
- 16 * 1%= 16%. Derate output amps by 16%
- (1-.16)*7.6amp = 6.4amp

It is possible to extend the operational range of the units if the ambient temperature is lower than 40 °C (104 °F), or if line reactors are used.

Bulletin 280, 281 CIP Information

Electronic Data Sheets

Electronic Data Sheets (EDS) files are specially formatted ASCII files that provide all of the information necessary for a configuration tool (for example, RSNetWorx for DeviceNet) to access and alter the parameters of the device. The EDS file contains all of the device information: number of parameters, groupings, parameter name, minimum, maximum, and default values, units, data format and scaling.

EDS files for all the ArmorStart distributed motor controller units are available from the Internet at
http://www.ab.com/networks/eds.

They may also be built automatically by some configuration tools since all of the information necessary for a basic EDS file may be extracted from the ArmorStart distributed motor controller.

DOL Type Product Codes and Name Strings

Product codes for DOL starters (and DOL Reversing starters) are based on the Overload relay current rating and the control power rating of the starter. The following table lists the product codes for the Bulletin 280 distributed motor controllers:

Table 50 - Bul. 280 Distributed Motor Controller Product Codes and Name Strings

280D Device Type ❶	Product Code	Contactor Size Code	Overload Current Rating	Control Power Voltage
22	0x8A	100C-12	0.24…1.2 A	24V DC
22	0x81	100C-12	0.5…2.5 A	24V DC
22	0x82	100C-12	1.1…5.5 A	24V DC
22	0x83	100C-23	3.2…16 A	24V DC
22	0x8B	100C-12	0.24…1.2 A	120V AC
22	0x84	100C-12	0.5…2.5 A	120V AC
22	0x85	100C-12	1.1…5.5 A	120V AC
22	0x86	100C-23	3.2…16 A	120V AC
22	0x8C	100C-12	0.24…1.2 A	240V AC
22	0x87	100C-12	0.5…2.5 A	240V AC
22	0x88	100C-12	1.1…5.5 A	240V AC
22	0x89	100C-23	3.2…16 A	240V AC
—	0x8D	—	—	—

❶ 22= Motor Starter

DOL Reversing Type Product Codes and Name String

The following table lists the product codes for the Bulletin 281 distributed motor controllers:

Table 51 - Bul. 281 Distributed Motor Controller Product Codes and Name Strings

281A Device Type ❶	281D Device Type ❷	Product Code	Contactor Size Code	Overload Current Rating	Control Power Voltage
133	22	0xCA	100C-12	0.24…1.2 A	24V DC
133	22	0xC1	100C-12	0.5…2.5 A	24V DC
133	22	0xC2	100C-12	1.1…5.5 A	24V DC
133	22	0xC3	100C-23	3.2…16 A	24V DC
133	22	0xCB	100C-12	0.24…1.2 A	120V AC
133	22	0xC4	100C-12	0.5…2.5 A	120V AC
133	22	0xC5	100C-12	1.1…5.5 A	120V AC
133	22	0xC6	100C-23	3.2…16 A	120V AC
133	22	0xCC	100C-12	0.24…1.2 A	240V AC
133	22	0xC7	100C-12	0.5…2.5 A	240V AC
133	22	0xC8	100C-12	1.1…5.5 A	240V AC
133	22	0xC9	100C-23	3.2…16 A	240V AC
—	—	0xCD-0xFF	—	—	—

❶ 133= PointBus Motor Starter

❷ 22= Motor Starter

DeviceNet Objects

The ArmorStart distributed motor controller supports the following DeviceNet object classes:

Table 52 - DeviceNet Object Classes

Class	Object
0x0001	Identity
0x0002	Message Router
0x0003	DeviceNet
0x0004	Assembly
0x0005	Connection
0x0008	Discrete Input Point
0x0009	Discrete Output Point
0x000F	Parameter Object
0x0010	Parameter Group Object
0x001D	Discrete Input Group
0x001E	Discrete Output Group
0x0029	Control Supervisor
0x002B	Acknowledge Handler
0x002C	Overload Object
0x00B4	DN Interface Object
0x032E	ZIP Object

Identity Object — CLASS CODE 0x0001

The following class attributes are supported for the Identity Object:

Table 53 - Identity Object Class Attributes

Attribute ID	Access Rule	Name	Data Type	Value
1	Get	Revision	UINT	1

Identity Objects

A single instance of the Identity Object is supported. The following instance attributes are supported.

Table 54 - Identity Object Instance Attributes

Attribute ID	Access Rule	Name	Data Type	Value
1	Get	Vendor	UINT	1
2	Get	Device Type	UINT	22 or 133
3	Get	Product Code	UINT	See Table 50 - and Table 51 -
4	Get	Revision Major Revision Minor Revision	Structure of: USINT USINT	Indicates Software Firmware Revision Number
5	Get	Status	WORD	Bit 0 — 0=not owned; 1=owned by master Bit 2 — 0=Factory Defaulted; 1=Configured Bit 8 — Minor Recoverable fault Bit 9 — Minor Unrecoverable fault Bit 10 — Major Recoverable fault Bit 11 — Major Unrecoverable fault
6	Get	Serial Number	UDINT	Unique Number for Each Device
7	Get	Product Name String Length ASCII String	Structure of: USINT STRING	Product code specific See Table 50 - and Table 51 -
8	Get	State	USINT	Returns the value “3=Operational”
9	Get	Configuration Consistency Value	UINT	Unique value depending on output of the parameter checksum algorithm.
10	Get/Set	Heartbeat Interval	USINT	In seconds. Default = 0

The following common services are implemented for the Identity Object:

Table 55 - Identity Object Common Services

Service Code	Implemented for:		Service Name
	Class	Instance	
0x0E	Yes	Yes	Get_Attribute_Single
0x05	No	Yes	Reset
0x10	No	Yes	Set_Attribute_Single

Message Router — CLASS CODE 0x0002

No class or instance attributes are supported. The message router object exists only to rout explicit messages to other objects.

DeviceNet Object — CLASS CODE 0x0003

The following class attributes are supported for the DeviceNet Object:

Table 56 - DeviceNet Object Class Attributes

Attribute ID	Access Rule	Name	Data Type	Value
1	Get	Revision	UINT	2

A single instance (instance 1) of the DeviceNet Object is supported. The following instance attributes are supported.

Table 57 - DeviceNet Object Instance Attributes

Attribute ID	Access Rule	Name	Data Type	Value
1	Get/Set	Node Address	USINT	0 - 63
2	Get/Set	Baud Rate	USINT	0=125K 1=250K 2=500K
5	Get	Allocation Info Allocation Choice Master Node Addr	Structure of: BYTE USINT	Allocation_byte* 0…63 = address 255 = unallocated
8	Get	MAC ID Switch Value	BOOL	0-63

*Allocation_byte	Bit 0	Explicit messaging
	Bit 1	Polled I/O
	Bit 4	COS I/O
	Bit 5	Cyclic I/O
	Bit 6	Acknowledge Suppression

The following services are implemented for the DeviceNet Object:

Table 58 - DeviceNet Object Common Services

Service Code	Implemented for:		Service Name
	Class	Instance	
0x0E	Yes	Yes	Get_Attribute_Single
0x10	No	Yes	Set_Attribute_Single
0x4B	No	Yes	Allocate_Master/Slave _Connection_Set
0x4C	No	Yes	Release_Master/Slave _Connection_Set

Assembly Object — CLASS CODE 0x0004

The following class attributes are supported for the Assembly Object:

Table 59 - Assembly Object Class Attributes

Attribute ID	Access Rule	Name	Data Type	Value
2	Get	Max Instance	UINT	190

All of the various instances of the assembly object support attribute 3. The following table summarizes the various instances that are supported:

Table 60 - DeviceNet Assembly Object Instance Attributes

Attribute ID	Type	Description
3	Consumed	Required ODVA Consumed Instance
52	Produced	Required ODVA Produced Instance
120	Produced	Custom Parameter Based Word Wise Assembly
160	Consumed	Default Consumed Instance for DOL and SoftStart units
161	Produced	Default Produced Instance for DOL and SoftStart units
162	Consumed	Standard Consumed Instance for DOL and SoftStart with Network Inputs
163	Produced	Standard Produced Instance for DOL and SoftStart with Network Outputs
181	Produced	User Inputs
182	Consumed	Consumed Network Bits (a.k.a Network Inputs)
183	Produced	Produced Network Bits (a.k.a. Network Outputs)
184	Produced	Trip Status Bits
185	Produced	Starter Status Bits
186	Produced	DeviceNet Status Bits
187	Consumed	Starter Control Bits
189	Produced	Warning Status Bits
190	Produced	1779-ZCIO Bits

Custom Parameter Based "Word-wise" I/O Assemblies

Table 61 - Custom Parameter Based "Word-Wise" (Produced) Assembly Instance 120

Instance 120									
Word	Byte	Bit 7	Bit 6	Bit 5	Bit 4	Bit 3	Bit 2	Bit 1	Bit 0
0	0	Value of the parameter pointed to by "Prod Assy Word 0" Param (low byte)							
	1	Value of the parameter pointed to by "Prod Assy Word 0" Param (high byte)							
1	2	Value of the parameter pointed to by "Prod Assy Word 1" Param (low byte)							
	3	Value of the parameter pointed to by "Prod Assy Word 1" Param (high byte)							
2	4	Value of the parameter pointed to by "Prod Assy Word 2" Param (low byte)							
	5	Value of the parameter pointed to by "Prod Assy Word 2" Param (high byte)							
3	6	Value of the parameter pointed to by "Prod Assy Word 3" Param (low byte)							
	7	Value of the parameter pointed to by "Prod Assy Word 3" Param (high byte)							

"Word-wise" Bit-Packed Assemblies

Assemblies whose instance numbers are 180...189 are all one word (16 bits) long. They can be used "stand alone", but their main use is to assemble information for EDS file parameters. These "word-wise" assemblies become the building blocks for the custom parameter-based "word-wise" assemblies described above. Note that these "word-wise" assemblies are designed for use with DeviceLogix, so their contents reflect the various words in the DeviceLogix data table.

Table 62 - Instance 181 — This is a "Read Only" Status Assembly

Instance 181 — Hardware Inputs 1…16								
Byte	**Bit 7**	**Bit 6**	**Bit 5**	**Bit 4**	**Bit 3**	**Bit 2**	**Bit 1**	**Bit 0**
0	—	—	—	—	Input 3	Input 2	Input 1	Input 0
1	Reserved							

Table 63 - Instance 182 — This is a "Read/Write" Control Assembly

Instance 182 — Consumed Network Inputs 1…16								
Byte	**Bit 7**	**Bit 6**	**Bit 5**	**Bit 4**	**Bit 3**	**Bit 2**	**Bit 1**	**Bit 0**
0	Net Input 8	Net Input 7	Net Input 6	Net Input 5	Net Input 4	Net Input 3	Net Input 2	Net Input 1
1	Net Input 16	Net Input 15	Net Input 14	Net Input 13	Net Input 12	Net Input 11	Net Input 10	Net Input 9

Table 64 - Instance 183 This is a "Read Only" Status Assembly

Instance 183 — Produced Network Outputs 1…15								
Byte	**Bit 7**	**Bit 6**	**Bit 5**	**Bit 4**	**Bit 3**	**Bit 2**	**Bit 1**	**Bit 0**
0	Net Out 8	Net Out 7	Net Out 6	Net Out 5	Net Out 4	Net Out 3	Net Out 8	Net Out 1
1	Reserved	Net Out 15	Net Out 14	Net Out 13	Net Out 12	Net Out 11	Net Out 10	Net Out 9

Table 65 - Instance 184 This is a "Read Only" Status Assembly

Instance 184 — Trip Status								
Byte	**Bit 7**	**Bit 6**	**Bit 5**	**Bit 4**	**Bit 3**	**Bit 2**	**Bit 1**	**Bit 0**
0	—	In SS Flt Reserved	Control Power	—	—	Phase Loss	OL Trip	Short Circuit
1	—	—	Hw Flt	EEPROM	—	—	DNet Power	Phase Imbal

Table 66 - Instance 185 This is a "Read Only" Status Assembly

Instance 185 — Starter Status								
Byte	**Bit 7**	**Bit 6**	**Bit 5**	**Bit 4**	**Bit 3**	**Bit 2**	**Bit 1**	**Bit 0**
0	At Ref	—	Net Ctl Status	Ready	Running Rev	Running Fwd	Warning	Tripped
1	—	—	140M On	HOA Stat.	Keypad Hand	—	—	—

Table 67 - Instance 186 This is a "Read Only" Status Assembly

Instance 186 — DeviceNet Status								
Byte	**Bit 7**	**Bit 6**	**Bit 5**	**Bit 4**	**Bit 3**	**Bit 2**	**Bit 1**	**Bit 0**
0	—	—	—	I/O Idle	I/O Flt	Exp Flt	I/O Cnxn	Exp Cnxn
1	ZIP FLT	ZIP4 CNX	ZIP3 FLT	ZIP2 CNX	ZIP2 FLT	ZIP2 CNX	ZIP1 FLT	ZIP1 CNX

Table 68 - Instance 187 This is a "Read/Write" Assembly

Instance 187 — Starter Control Bits								
Byte	**Bit 7**	**Bit 6**	**Bit 5**	**Bit 4**	**Bit 3**	**Bit 2**	**Bit 1**	**Bit 0**
0	User Out B	User Out A	—	—	—	Fault Reset	Run Rev	Run Fwd
1	—	—	—	—	—	—	—	—

Table 69 - Instance 189 This is a "Read-Only" Assembly

Instance 189 — Warning Status Bits								
Byte	**Bit 7**	**Bit 6**	**Bit 5**	**Bit 4**	**Bit 3**	**Bit 2**	**Bit 1**	**Bit 0**
0	—	IO Warning	Control Power Warning	—	—	PL Warning	—	—
1	—	—	HW Warn	—	—	—	DN Warn	PI Warn

Standard Distributed Motor Controller I/O Assemblies

Standard distributed motor controller I/O Assemblies are available on all Starter Types.

Standard Distributed Motor Controller Output (Consumed) Assemblies

Table 70 - Instance 3 is the required output (consumed) assembly defined in the DeviceNet Motor Starter Profile

Instance 3 — ODVA Starter								
Byte	**Bit 7**	**Bit 6**	**Bit 5**	**Bit 4**	**Bit 3**	**Bit 2**	**Bit 1**	**Bit 0**
0	—	—	—	—	—	—	—	Run Fwd

Table 71 - Instance 160 is the default output (consumed) assembly for Standard Distributed Motor Controllers

Instance 160 — Default Consumed Standard Distributed Motor Controller								
Byte	**Bit 7**	**Bit 6**	**Bit 5**	**Bit 4**	**Bit 3**	**Bit 2**	**Bit 1**	**Bit 0**
0	User Out B	User Out A	—	—	—	Fault Reset	Run Rev	Run Fwd

Table 72 - Instance 162 is the standard output (consumed) assembly with Network Inputs

Instance 162 — Standard Consumed Starter with Network Inputs								
Byte	**Bit 7**	**Bit 6**	**Bit 5**	**Bit 4**	**Bit 3**	**Bit 2**	**Bit 1**	**Bit 0**
0	User Out B	User Out A	—	—	—	Fault Reset	Run Rev	Run Fwd
1	Net In 8	Net In 7	Net In 6	Net In 5	Net In 4	Net In 3	Net In 2	Net In 1
2	Net In 16	Net In 15	Net In 14	Net In 13	Net In 12	Net In 11	Net In 10	Net In 9

Standard Distributed Motor Controller Input (Produced) Assemblies

Table 73 - Instance 52 is the required input (produced) assembly defined in the DeviceNet Motor Starter Profile

Instance 52 — ODVA Starter								
Byte	**Bit 7**	**Bit 6**	**Bit 5**	**Bit 4**	**Bit 3**	**Bit 2**	**Bit 1**	**Bit 0**
—	—	—	—	—	—	Running	—	Fault

Table 74 - Instance 161 is the default input (produced) assembly for Standard Distributed Motor Controllers

Instance 161 — Default Producted Standard Distributed Motor Controller								
Byte	**Bit 7**	**Bit 6**	**Bit 5**	**Bit 4**	**Bit 3**	**Bit 2**	**Bit 1**	**Bit 0**
0	—	—	—	Ready	Running Rev	Running Fwd	Warning	Tripped
1	—	—	140M On	HOA Stat.	User In 3	User In 2	User In 1	User In 0

Table 75 - Instance 163 is the standard input (produced) assembly with Network Outputs

Instance 163 — Standard Produced Starter with Network Outputs								
Byte	**Bit 7**	**Bit 6**	**Bit 5**	**Bit 4**	**Bit 3**	**Bit 2**	**Bit 1**	**Bit 0**
0	—	—	—	Ready	Running Rev	Running Fwd	Warning	Tripped
1	—	—	140M On	HOA Stat.	User In 4	User In 3	User In 2	User In 1
2	Net Out 8	Net Out 7	Net Out 6	Net Out 5	Net Out 4	Net Out 3	Net Out 2	Net Out 1
3	Logic Enabled	Net Out 15	Net Out 14	Net Out 13	Net Out 12	Net Out 11	Net Out 10	Net Out 9
4	ZIP CCV (Low)							
5	ZIP CCV (High)							

Table 76 - Instance 190 is the 1999-ZCIO Native Format Produced Assembly

Instance 190 — 1799-ZCIO Native Format Produced Assembly								
Byte	**Bit 7**	**Bit 6**	**Bit 5**	**Bit 4**	**Bit 3**	**Bit 2**	**Bit 1**	**Bit 0**
0	Running Rev	Running Fwd	Warning	Tripped	Input 3	Input 2	Input 1	Input 0
1	Reserved	Logic Enabled	Reserved				140M On	HOA
2	Reserved				User Out B	User Out A	Run Rev	Run Fwd
3	Reserved							
4	Net Out 8	Net Out 7	Net Out 6	Net Out 5	Net Out 4	Net Out 3	Net Out 2	Net Out 1
5	ZIP CCV (Low)							
6	ZIP CCV (High)							

Connection Object — CLASS CODE 0x0005

No class attributes are supported for the Connection Object.

Multiple instances of the Connection Object are supported, instances 1, 2, and 4 from the group 2 predefined master/slave connection set, instances 5 and 6 are available through explicit UCMM connections.

Instance 1 is the Predefined Group 2 Connection Set Explicit Message Connection. The following instance 1 attributes is supported:

Table 77 - Connection Object Instance 1 Attributes

Attribute ID	Access Rule	Name	Data Type	Value
1	Get	State	USINT	0=nonexistant 1=configuring 3=established 4=timed out
2	Get	Instance Type	USINT	0=Explicit Message
3	Get	Transport Class Trigger	USINT	0x83 — Server, Transport Class 3
4	Get	Produced Connection ID	UINT	10xxxxxx011 xxxxxx = node address
5	Get	Consumed Connection ID	UINT	10xxxxxx100 xxxxxx = node address
6	Get	Initial Comm Characteristics	USINT	0x22
7	Get	Produced Connection Size	UINT	0x61
8	Get	Consumed Connection Size	UINT	0x61
9	Get/Set	Expected Packet Rate	UINT	in ms
12	Get	Watchdog Action	USINT	01 = auto delete 03 = deferred delete
13	Get	Produced Connection Path Length	UINT	0
14	Get	Produced Connection Path	—	Empty
15	Get	Consumed Connection Path Length	UINT	0
16	Get	Consumed Connection Path	—	Empty

Instance 2 is the Predefined Group 2 Connection Set Polled I/O Message Connection. The following instance 2 attributes are supported:

Table 78 - Connection Object Instance 2 Attributes

Attribute ID	Access Rule	Name	Data Type	Value
1	Get	State	USINT	0=nonexistant 1=configuring 3=established 4=timed out
2	Get	Instance Type	USINT	1= I/O Connection
3	Get	Transport Class Trigger	USINT	0x82 — Server, Transport Class 2 (If alloc_choice != polled and ack suppression is enabled then value = 0x80)
4	Get	Produced Connection ID	UINT	01111xxxxxx xxxxxx=node address
5	Get	Consumed Connection ID	UINT	10xxxxxx101 xxxxxx=node address
6	Get	Initial Comm Characteristics	USINT	0x21
7	Get	Produced Connection Size	UINT	0 to 8
8	Get	Consumed Connection Size	UINT	0 to 8
9	Get/Set	Expected Packet Rate	UINT	in ms
12	Get/Set	Watchdog Action	USINT	0=transition to timed out 1=auto delete 2=auto reset
13	Get	Produced Connection Path Length	UINT	8
14	Get/Set	Produced Connection Path	—	21 04 00 25 (assy inst) 00 30 03
15	Get	Consumed Connection Path Length	UINT	8
16	Get/Set	Consumed Connection Path	—	21 04 00 25 (assy inst) 00 30 03

Instance 4 is the Predefined Group 2 Connection Set Change of State/Cyclic I/O Message Connection. The following instance 4 attributes are supported:

Table 79 - Connection Object Instance 4 Attributes

Attribute ID	Access Rule	Name	Data Type	Value
1	Get	State	USINT	0=nonexistant 1=configuring 3=established 4=timed out
2	Get	Instance Type	USINT	1=I/O Connection
3	Get	Transport Class Trigger	USINT	0x00 (Cyclic, unacknowledged) 0x03 (Cyclic, acknowledged) 0x10 (COS, unacknowledged) 0x13 (COS, acknowledged)
4	Get	Produced Connection ID	UINT	01101xxxxxx xxxxxx=node address
5	Get	Consumed Connection ID	UINT	10xxxxxx101 xxxxxx=node address
6	Get	Initial Comm Characteristics	USINT	0x02 (acknowledged) 0x0F (unacknowledged)
7	Get	Produced Connection Size	UINT	0 to 8
8	Get	Consumed Connection Size	UINT	0 to 8
9	Get/Set	Expected Packet Rate	UINT	in ms
12	Get	Watchdog Action	USINT	0=transition to timed out 1=auto delete 2=auto reset
13	Get	Produced Connection Path Length	UINT	8
14	Get	Produced Connection Path	—	21 04 00 25 (assy inst) 00 30 03
15	Get	Consumed Connection Path Length	UINT	8
16	Get/Set	Consumed Connection Path	—	21 04 00 25 (assy inst) 00 30 03

Instances 5 through 7 are available group 3 explicit message connections that are allocated through the UCMM. The following attributes are supported:

Table 80 - Connection Object Instance 5-7 Attributes

Attribute ID	Access Rule	Name	Data Type	Value
1	Get	State	USINT	0=nonexistant 1=configuring 3=established 4=timed out
2	Get	Instance Type	USINT	0=Explicit Message
3	Get	Transport Class Trigger	USINT	0x83 — Server, Transport Class 3
4	Get	Produced Connection ID	UINT	Depends on message group and Message ID
5	Get	Consumed Connection ID	UINT	Depends on message group and Message ID
6	Get	Initial Comm Characteristics	USINT	0x33 (Group 3)
7	Get	Produced Connection Size	UINT	0
8	Get	Consumed Connection Size	UINT	0XFFFF
9	Get/Set	Expected Packet Rate	UINT	in ms
12	Get	Watchdog Action	USINT	01 = auto delete 03 = deferred delete
13	Get	Produced Connection Path Length	UINT	0
14	Get	Produced Connection Path	—	Empty
15	Get	Consumed Connection Path Length	UINT	0
16	Get	Consumed Connection Path	—	Empty

Instances 8-11 are ZIP Consumers. The following instance attributes are supported:

Table 81 - Connection Object Instances 8-11 Attributes

Attribute ID	Access Rule	Name	Data Type	Value
1	Get	State	USINT	0=nonexistant 1=configuring 3=established
2	Get	Instance Type	USINT	1=I/O Connection
3	Get	Transport Class Trigger	USINT	0x20 (COS, unacknowledged)
4	Get	Produced Connection ID	UINT	FFFF (not producing data)
5	Get	Consumed Connection ID	UINT	01101xxxxxx xxxxxx=node address
6	Get	Initial Comm Characteristics	USINT	0xF0 (unacknowledged)
7	Get	Produced Connection Size	UINT	0
8	Get	Consumed Connection Size	UINT	8
9	Get/Set	Expected Packet Rate	UINT	in milliseconds
12	Get	Watchdog Action	USINT	2=auto reset
13	Get	Produced Connection Path Length	UINT	0
14	Get	Produced Connection Path	—	0
15	Get	Consumed Connection Path Length	UINT	8
16	Get	Consumed Connection Path	—	21 0E 03 25 01 00 30 02

The following services are implemented for the Connection Object:

Table 82 - Connection Objects Common Services

Service Code	Implemented for:		Service Name
	Class	Instance	
0x05	No	Yes	Reset
0x0E	No	Yes	Get_Attribute_Single
0x10	No	Yes	Set_Attribute_Single

Discrete Input Point Object — CLASS CODE 0x0008

The following class attributes are supported for the Discrete Input Point Object:

Table 83 - Discrete Input Point Object Class Attributes

Attribute ID	Access Rule	Name	Data Type	Value
1	Get	Revision	UINT	2
2	Get	Max Instance	UINT	4

Four instances of the Discrete Input Point Object are supported. All instances contain the following attributes:

Table 84 - Discrete Input Point Object Instance Attributes

Attribute ID	Access Rule	Name	Data Type	Value
3	Get	Value	BOOL	0=OFF, 1=ON
115	Get/Set	Force Enable	BOOL	0=Disable, 1=Enabl;e
116	Get/Set	Force Value	BOOL	0=OFF, 1=ON

The following common services are implemented for the Discrete Input Point Object:

Table 85 - Discrete Input Point Object Instance Common Services

Service Code	Implemented for:		Service Name
	Class	Instance	
0x0E	Yes	Yes	Get_Attribute_Single
0x10	No	Yes	Set_Attribute_Single

Discrete Output Point Object — CLASS CODE 0x0009 ❶

The following class attributes are supported for the Discrete Output Point Object:

Table 86 - Discrete Output Point Object Class Attributes

Attribute ID	Access Rule	Name	Data Type	Value
1	Get	Revision	UINT	1
2	Get	Max Instance	UINT	4

Four instances of the Discrete Output Point Object are supported. The following table summarizes the DOP instances:

Table 87 - Discrete Output Point Object Instance Attributes

Instance ID	Name	Alternate Mapping	Description
1	Run Fwd Output	0029 – 01 – 03	Run Forward output. For all starter types, this output is hard wired from the ArmorStart CPU to the actuator
2	Run Rev Output	0029 – 01 – 04	Run Reverse output. For all starter types, this output is hard wired from the ArmorStart CPU to the actuator
3	User Output A	none	These are the 2 ArmorStart user outputs.
4	User Output B	none	

All instances contain the following attributes.

Attribute ID	Access Rule	Name	Data Type	Value
3	Get	Value	BOOL	0=OFF, 1=ON
5	Get/Set	Fault Action	BOOL	0=Fault Value attribute, 1=Hold Last State
6	Get/Set	Fault Value	BOOL	0=OFF, 1=ON
7	Get/Set	Idle Action	BOOL	0=Fault Value attribute, 1=Hold Last State
8	Get/Set	Idle Value	BOOL	0=OFF, 1=ON
113	Get/Set ❶	Pr Fault Action	BOOL	0=Pr Fault Value attribute, 1=Ignore
114	Get/Set ❶	Pr Fault Value	BOOL	0=OFF, 1=ON
115	Get/Set	Force Enable	BOOL	0=Disable, 1=Enable
116	Get/Set	Force Value	BOOL	0=OFF, 1=ON

❶ For DOP instances 1 and 2, attributes 113 and 114 have "Get" only access, and their values are always 0.

The following common services are implemented for the Discrete Output Point Object:

Table 88 - Discrete Output Object Common Services

Service Code	Implemented for:		Service Name
	Class	Instance	
0x0E	Yes	Yes	Get_Attribute_Single
0x10	No	Yes	Set_Attribute_Single

Discrete Output Point Object Special Requirements

DOP Instances 3 and 4 Special Behavior

There are many sources that can affect an output point's value: an I/O message, an explicit message, local logic, network fault and idle conditions, and protection fault conditions. An output point must know how to select which source of data to use to drive its value attribute.

An output that is not used in a DeviceLogix program behaves much the same as in the DeviceNet Specification. One notable addition to DOP behavior for the ArmorStart implementation is that Protection Fault Action and Protection Fault Value attributes determine the behavior of the DOP when the ArmorStart faults on a protection fault.

The following State Transition Diagram is used for **DOP Instances 3 and 4** when they are not in use in a DeviceLogix Program.

Figure 79 - State Transition Diagram — Unbound DOP Instances 3 and 4

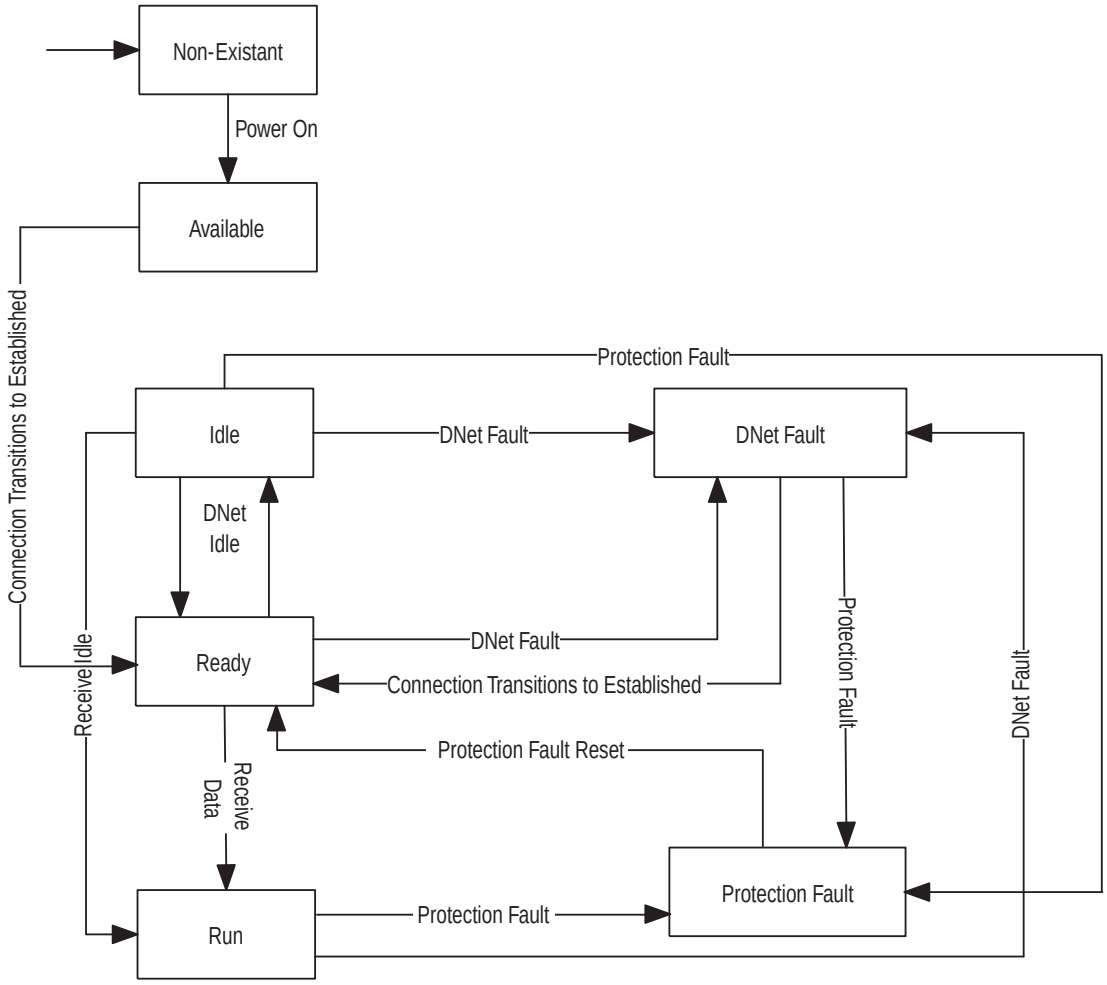

DOP Instances 1 and 2 Special Behavior

Besides the sources that can affect output points 3 and 4, DOPs 1 and 2 can be affected by keypad inputs since they double as the Run Forward and Run Reverse outputs. This adds complexity to their behavior, so their behavior is defined in this section separately.

The following State Transition Diagram is used for **DOP Instances 1 and 2**

Figure 80 - DOP Instances 1 and 2

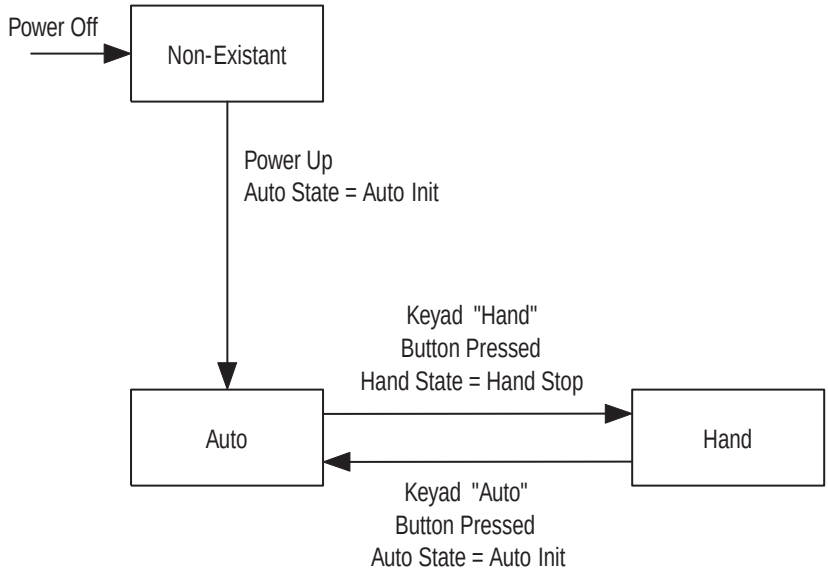

The following State Transition Diagram is used in **Auto State for Unbound DOP Instances 1 and 2**.

Figure 81 - Auto State for Unbound DOP Instances 1 and 2

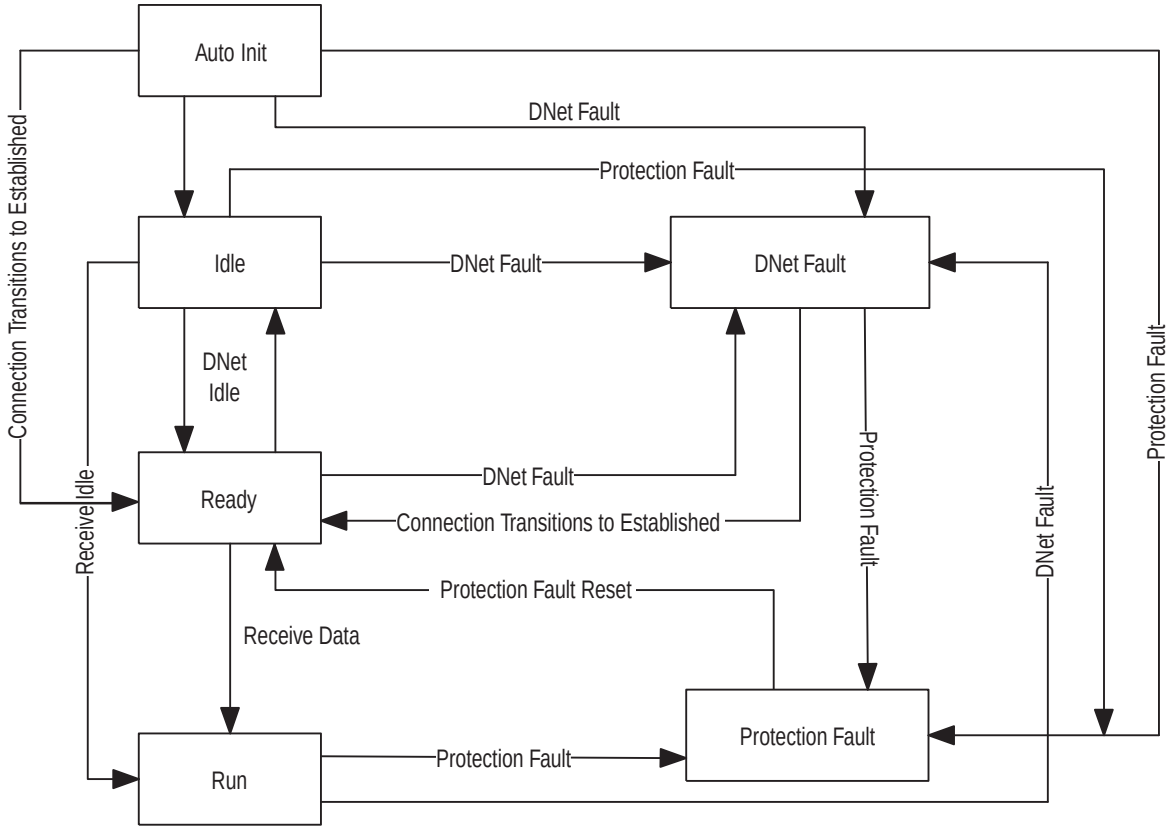

The following State Transition Diagram is used in **Hand State for DOPs 1 and 2** with parameter 45 Keypad Mode set to 1 = momentary.

Figure 82 - Hand State for DOPs 1 and 2 (Momentary)

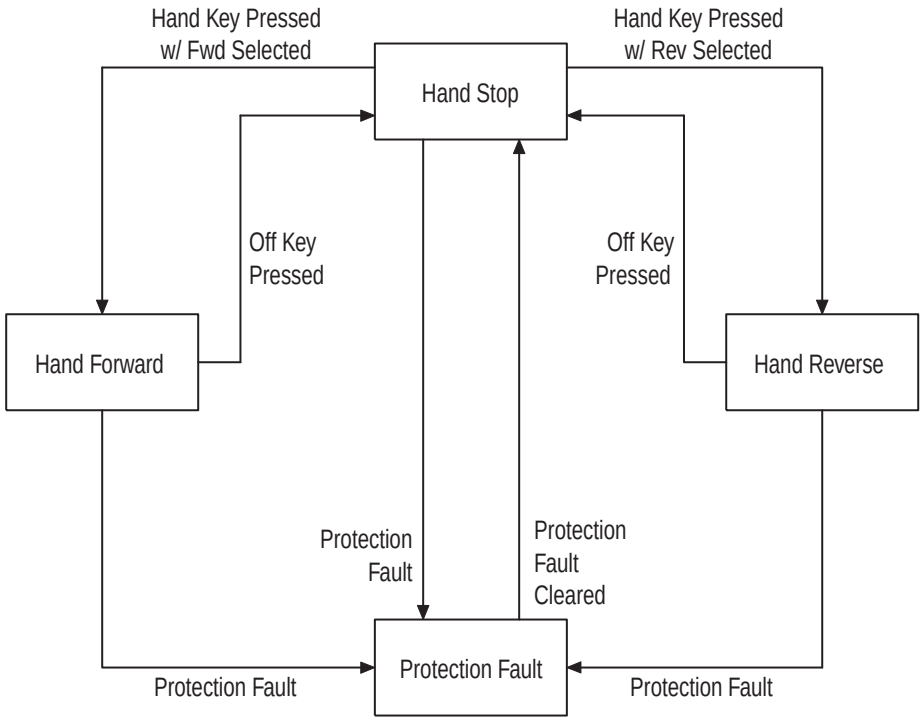

The following State Transition Diagram is used in **Hand State for DOPs 1 and 2** with parameter 45 Keypad Mode set to 1 = maintained.

Figure 83 - Hand State for DOPs 1 and 2 (Maintained)

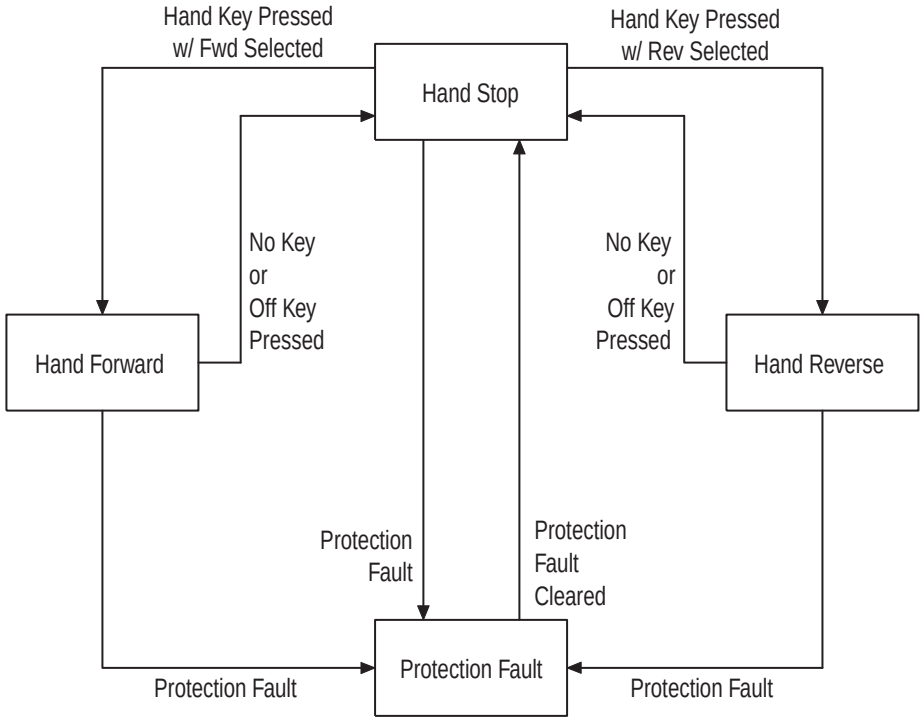

Parameter Object — CLASS CODE 0x000F

The following class attributes are supported for the Parameter Object:

Table 89 - Parameter Object Class Attributes

Attribute ID	Access Rule	Name	Data Type
1	Get	Revision	UINT
2	Get	Max Instance	UINT
8	Get	Parameter Class Descriptor	WORD
9	Get	Configuration Assembly Instance	UINT

The number of instances of the parameter object depends on the type of distributed motor controller. There is a standard set of instances reserved (1-99) for all starters. These instances are followed by a unique set of instances for each starter type (Across the Line, Soft start, or Inverter type).

The following instance attributes are implemented for all parameter attributes:

Table 90 - Parameter Object Instance Attributes

Attribute ID	Access Rule	Name	Data Type
1	Get/Set	Value	Specified in Descriptor
2	Get	Link Path Size	USINT
3	Get	Link Path	Array of: BYTE EPATH
4	Get	Descriptor	WORD
5	Get	Data Type	EPATH
6	Get	Data Size	USINT
7	Get	Parameter Name String	SHORT_STRING
8	Get	Units String	SHORT_STRING
9	Get	Help String	SHORT_STRING
10	Get	Minimum Value	Specified in Descriptor
11	Get	Maximum Value	Specified in Descriptor
12	Get	Default Value	Specified in Descriptor
13	Get	Scaling Multiplier	UINT
14	Get	Scaling Divisor	UINT
15	Get	Scaling Base	UINT
16	Get	Scaling Offset	INT
17	Get	Multiplier Link	UINT
18	Get	Divisor Link	UINT
19	Get	Base Link	UINT
20	Get	Offset Link	UINT
21	Get	Decimal Precision	USINT

The following common services are implemented for the Parameter Object:

Table 91 - Parameter Object Common Services

Service Code	Implemented for:		Service Name
	Class	Instance	
0x0E	Yes	Yes	Get_Attribute_Single
0x10	No	Yes	Set_Attribute_Single
0x01	No	Yes	Get_Attributes_All

Parameter Group Object — CLASS CODE 0x0010

The following class attributes are supported for the Parameter Object:

Table 92 - Parameter Group Object Class Attributes

Attribute ID	Access Rule	Name	Data Type
1	Get	Revision	UINT
2	Get	Max Instance	UINT

All Bulletin 280, 281 Motor Starters have the following instances of the parameter group object:

- Instance 1 = DeviceLogix Parameters
- Instance 2 = DeviceNet Parameters
- Instance 3 = Starter Protection Parameters
- Instance 4 = User I/O Parameters
- Instance 5 = Miscellaneous Setup Parameters
- Instance 6 = ZIP Parameters
- Instance 7 = Starter Display
- Instance 8 = Starter Setup

The following instance attributes are supported for all parameter group instances:

Table 93 - Parameter Group Object Instance Attributes

Attribute ID	Access Rule	Name	Data Type
1	Get	Group Name String	SHORT_STRING
2	Get	Number of Members	UINT
3	Get	1st Parameter	UINT
4	Get	2nd Parameter	UINT
n	Get	Nth Parameter	UINT

The following common services are implemented for the Parameter Group Object:

Table 94 - Parameter Group Object Service Common Services

Service Code	Implemented for:		Service Name
	Class	Instance	
0x0E	Yes	Yes	Get_Attribute_Single

Discrete Input Group Object —CLASS CODE 0x001D

No class attributes are supported for the Discrete Input Group Object.

A single instance of the Discrete Input Group Object is supported. It contains the following attributes:

Table 95 - Discrete Input Instance Attributes

Attribute ID	Access Rule	Name	Data Type	Value
3	Get	Number of Instances	USINT	4
4	Get	Binding	Array of UINT	List of DIP instances
6	Get/Set	Off_On_Delay	UINT	in µsec
7	Get/Set	On_Off_Delay	UINT	in µsec

The following common services are implemented for the Discrete Input Group Object:

Table 96 - Discrete Input Group Object Common Services

Service Code	Implemented for:		Service Name
	Class	Instance	
0x0E	No	Yes	Get_Attribute_Single
0x10	No	Yes	Set_Attribute_Single

Discrete Output Group Object — CLASS CODE 0x001E

No class attributes are supported for the Discrete Output Group Object.

A single instance of the Discrete Output Group Object is supported. It contains the following attributes:

Table 97 - Discrete Output Instance Attributes

Attribute ID	Access Rule	Name	Data Type	Value
3	Get	Number of Instances	USINT	4 for DOL
4	Get	Binding	Array of UINT	List of DOP instances; 1, 2, 3, 4
6	Get/Set	Command	BOOL	0=idle; 1=run
104	Get/Set	Network Status Override	BOOL	0=No Override (go to safe state) 1=Override (run local logic)
105	Get/Set	Comm Status Override	BOOL	0=No override (go to safe state) 1=Override (run local logic)

The following common services are implemented for the Discrete Output Group Object:

Table 98 - Discrete Output Group Common Services

Service Code	Implemented for:		Service Name
	Class	Instance	
0x0E	No	Yes	Get_Attribute_Single
0x10	No	Yes	Set_Attribute_Single

Control Supervisor Object — CLASS CODE 0x0029

No class attributes are supported.

The following instance attributes are supported:

A single instance (instance 1) of the Control Supervisor Object is supported.

Table 99 - Control Supervisor Instance Attributes

Attribute ID	Access Rule	Name	Data Type	Value
3	Get/Set	Run 1	BOOL	These Run outputs also map to DOP instances 1 and 2.
*4	Get/Set	Run 2	BOOL	
7	Get	Running 1	BOOL	Status of RUN FWD contact
*8	Get	Running 2	BOOL	Status of RUN REV contact
9	Get	Ready	BOOL	Device not faulted
10	Get	Tripped	BOOL	Device faulted
12	Get/Set	Fault Reset	BOOL	0->1 = Trip Reset
100	Get/Set	Keypad Mode	BOOL	0=Maintained; 1=Momentary
101	Get/Set	Keypad Disable	BOOL	0=Not Disabled; 1=Disabled
115	Get	Warning Status	WORD	Bits 0-4 = reserved Bit 5 = CP Warning Bit 6 = IO Warning Bit 7 = reserved Bit 8 = reserved Bit 9 = DN Warning Bits 10-12 = reserved Bit 13 = HW Warning Bit 14 = reserved Bit 15 = DB Warning
124	Get/Set	Trip Enable	WORD	Bit enumerated trip enable word
130	Get/Set	Trip Reset Mode	BOOL	0=manual; 1=auto
131	Get/Set	Trip Reset Level	USINT	0 – 100%; default = 75
151	Get	Base Enclosure	WORD	Bit 0 = IP67 Bit 1 = NEMA 4x Bit 2 = PLe Cat 4 Bits 3-15 reserved
152	Get	Base Options	WORD	Bit 0 = Output Fuse Bit 1 = Safety Monitor Bit 2 = CP Fuse Detect Bits 3-7 = Reserved Bit 8 = 10A Base Bit 9 = 25A Base Bit 10-15 = Reserved

153	Get	Wiring Options	WORD	Bit 0 = Conduit Bit 1 = Round Media Bit 2 = 28xG Gland Bits 3-15 = Reserved
154	Get	Starter Enclosure	WORD	Bit 0 = IP67 Bit 1 = NEMA 4x Bit 2 = 28xG Ple Cat4 Bits 3-15 reserved
155	Get	Starter Options	WORD	Bit 0 = Full Keypad Bit 1 = Safety Monitor Bit 2 = Source Brake Bit 3 = CP Brake Bit 4 = Dynamic Brake Bit 5 = Output Contactor Bit 6 = EMI Filter Bit 7 = 0-10V Analog In Bit 8 = Fused Dyn Brake Bits 9-15 = Reserved
156	Get	Last Pr Trip	UINT	See Parameter 61

The following common services are implemented for the Control Supervisor Object:

Table 100 - Control Supervisor Object Common Services

Service Code	Implemented for:		Service Name
	Class	Instance	
0x0E	No	Yes	Get_Attribute_Single
0x10	No	Yes	Set_Attribute_Single

Acknowledge Handler Object — CLASS CODE 0x002b

No class attributes are supported for the Acknowledge Handler Object.

A single instance (instance 1) of the Acknowledge Handler Object is supported. The following instance attributes are supported:

Table 101 - Acknowledge Handler Instance Attributes

Attribute ID	Access Rule	Name	Data Type	Value
1	Get/Set	Acknowledge Timer	UINT	milliseconds
2	Get	Retry Limit	USINT	1
3	Get	COS Producing Connection Instance	UINT	4

The following common services are implemented for the Acknowledge Handler Object:

Table 102 - Acknowledge Handler Common Services

Service Code	Implemented for:		Service Name
	Class	Instance	
0x0E	No	Yes	Get_Attribute_Single
0x10	No	Yes	Set_Attribute_Single

Overload Object — CLASS CODE 0x002c

No class attributes are supported for the Overload Object.

A single instance (instance 1) of the Overload Object is supported for Bulletin 280, 281:

Table 103 - Overload Object Instance Attributes

Attribute ID	Access Rule	Name	Data Type	Value
3	Get/Set	FLA Setting	BOOL	xxx.x Amps
4	Get/Set	Trip Class	USINT	1=10 2=15 3=20
5	Get	Average Current	UINT	xxx.x Amps
7	Get	% Thermal Utilized	USINT	xxx% FLA
8	Get	Current L1	UINT	xxx.x Amps
9	Get	Current L2	UINT	xxx.x Amps
10	Get	Current L3	UINT	xxx.x Amps
190	Get/Set	FLA Setting Times 10	BOOL	xxx.x Amps
192	Get	Avg. Current Times 10	UINT	xxx.x Amps
193	Get	Current L1 Times 10	UINT	xxx.x Amps
194	Get	Current L2 Times 10	UINT	
195	Get	Current L3 Times 10	UINT	

The following common services are implemented for the Overload Object:

Table 104 - Acknowledge Handler Object Common Services

Service Code	Implemented for:		Service Name
	Class	Instance	
0x0E	No	Yes	Get_Attribute_Single
0x10	No	Yes	Set_Attribute_Single

DeviceNet Interface Object — CLASS CODE 0x00B4

This "vendor specific" object has no class attributes.

A single instance (instance 1) of the DeviceNet Interface Object is supported:

Table 105 - DeviceNet Interface Object Instance Attribute

Attribute ID	Access Rule	Name	Data Type	Min/Max	Default	Description
7	Get/Set	Prod Assy Word 0	USINT	0…108	1	Defines Word 0 of Assy 120
8	Get/Set	Prod Assy Word 1	USINT	0…108	5	Defines Word 1 of Assy 120
9	Get/Set	Prod Assy Word 2	USINT	0…108	6	Defines Word 2 of Assy 120
10	Get/Set	Prod Assy Word 3	USINT	0…108	7	Defines Word 3 of Assy 120
13	Get/Set	Starter COS Mask	WORD	0…0xFFFF	0xFFFF	Change of state mask for starter bits
15	Get/Set	Autobaud Enable	BOOL	0…1	1	1= enabled; 0 = disabled
16	Get/Set	Consumed Assy	USINT	0…185	160	3, 121, 160, 162, 182, 187
17	Get/Set	Produced Assy	USINT	100…187	161	52, 121, 161, 163, 181-187,189,190
19	Get/Set	Set To Defaults	BOOL	0…1	0	0=No action; 1=Reset
23	Get	I/O Produced Size	USINT	0…8	—	Size of I/O Produced Data in Bytes
24	Get	I/O Consumed Size	USINT	0…3	—	Size of I/O Consumed Data in Bytes
30	Get	DNet Voltage	UINT	xx.xx	—	DeviceNet Voltage xx.xx Volts
50	Get/Set	PNB COS Mask	WORD	0 to 0x00FF	0	Change of state mask for PNBs

The following common services are implemented for the DeviceNet Interface Object:

Table 106 - DeviceNet Interface Object Common Services

Service Code	Implemented for:		Service Name
	Class	Instance	
0x0E	No	Yes	Get_Attribute_Single
0x10	No	Yes	Set_Attribute_Single

ZIP Object

CLASS CODE 0x032E

The following class attributes are supported.

Attribute ID	Access Rule	NV	Name	Data Type	Description of Attribute	Semantics of Values
1	Get	NV	Revision	UINT		1
3	Get	NV	Number of Instances	UINT		5
8	Get	V	Instance List	Array of USINT	List of instances	A maximum of 255 instances may be supported.
9	Set	NV	ZIP Enable	BOOL	Enable/Disable ZIP for the device	0=disable 1=enable

ZIP Enable

Allows ZIP functionality to be enabled/disabled for the entire device. This parameter must be disabled before any changes to the ZIP configuration for the device can be made. The default value for this attribute is 0=disable. Upon enabling ZIP, the ZIP object checks that the produced and consumed assembly instances chosen for each ZIP producing and consuming connection contain the Zone Key (instance attribute #7). If any of the chosen assemblies does not contain the Zone Key in the last 2 bytes of the assembly data attribute, then the error code 0x0C (Object State Conflict) is returned by the Set service.

Five Instances of the ZIP object are supported. Instances 1-4 are ZIP consumers, and Instance 5 is the ZIP producer.

Attribute ID	Access Rule	NV	Name	Data Type	Description of Attribute	Semantics of Values
1	Set*	NV	Zone Connection ID	UDINT	The Connection ID	*For producing connections, Set access not required.
2	Get	NV	Zone Health	BOOL	Health status of the connection	0=healthy 1=not healthy
3	Set* (Get for producers)	NV	Zone Point Mask	STRUCT of: USINT Array of BYTE	Masks individual bytes in a consumed message for use by in Zone Point Data table. Masking results in a byte packed image.	Struct of USINT = 4 Array[4] of BYTE Producers return USINT= 0
4	Set*	NV	Zone Point Offset	UINT	Specifies an offset into the 8-byte Zone Point Data table to place masked data.	*Get access for producers. Producers return UINT = 0
5	Set	NV	Zone RPI	UINT	Requested Packet Interval (RPI) of the producing or consuming connection. This value is placed in the Expected Packet Rate attribute of the connection	ms
6	Set	NV	Zone PIT	UINT	Production Inhibit Time (PIT) of producing connection object	ms Required for I/O client connections, except those with production trigger of Cyclic.
7	Get/Set*	NV	Zone Key	UINT	The security key attribute for the connection.	Access Rule of Get only for producing connections.
8	Set	NV	ZIP Auto Run	BOOL	Configure the ZIP producing connection to auto-allocate on power-up	0=disable 1=enable
9	Get*	NV	Associated Connection Instance	UINT	The instance number of the connection object associated with this ZIP instance.	*For systems that dynamically allocate connections, the access rule can be Set.
10	Set	NV	Connection Path Length	UINT	Number of bytes of the "Connection Path" attribute.	
11	Set (prod) Get (cons)	NV	Connection Path	EPATH	Specifies an application object whose data is to be produced, or is to receive consumed data.	Consumed path: 21 0e 03 25 01 00 30 02 Produced path: Produced assy path
12	Set (cons) Get (prod)	NV	Data Size	UINT	The size of the data to be produced or consumed.	Consumed: 32 or 8 Produced: size of produced assembly
13	Get*	NV	Connection Direction	BOOL	The direction of data flow for the connection instance represented by this instance.	0=Producing 1=Consuming *For systems that dynamically allocate connections, the access rule can be Set.
14	Set*	NV	Data Security Disable	BOOL	Enables data security checking for the connection. *Get access for producers. Producers return the value 0	0=enable 1=disable (Default = 0)
15	Set*	NV	Zone Analog Data Type	UINT	Data type from CIP Common Spec Table C-6.1 "Identification Codes of Elementary Data Types".	0xC7 = UINT
16	Set* (Get for producers)	NV	Zone Analog Mask	STRUCT of: USINT Array of BYTE	Masks individual data units of the type defined in the "Zone Analog Data Type" in a consumed message for use by in Zone Analog Data table. Each bit in a BYTE mask represents one unit (WORD, REAL, etc.) of consumed data	Struct of USINT = 2 Array[2] of BYTE Producers return USINT= 0
17	Set* (Get for producers)	NV	Zone Analog Offset	UINT	Specifies an offset into the 8-byte Zone Point Data table to place masked data.	*Get access for producers. Producers return UINT = 0
101	Set*	NV	Zone MAC ID	USINT	Reflects attribute 1 for ArmorStart LT	—
103	Set*	NV	Point Mask	DWORD	Reflects attribute 3 for ArmorStart LT	This attribute matches the Array[4] structure element in attribute 3
114	Set*	NV	ZoneControl	BYTE	Choose consumed IO connection properties	Semantics of this bit enumerated value are the same as params 134-137
116	Set*	NV	Analog Mask	WORD	Reflects attribute 16 for ArmorStart LT	This attribute matches the Array[2] structure element in attribute 16

Attribute Semantics

1) Zone Connection ID - Contains the Consumed_Connection_Id attribute for the connection represented by this object instance. The default value is 0xFFFF. For consuming connections, the value 0xFFFF disables the consumption of data for the connection. For producing connections, this value represents the connection ID on which production occurs. For predefined producing connections, this value is set to the producing Connection ID when Auto Run occurs at power-up, or upon allocation of the connection.

2) Zone Health - Indicates the health status of the zone connection. If the ZIP connection for the zone times out, this parameter is set to the value 1 = Not Healthy. Also, if Data Security is enabled and the Zone Key received in the consumed I/O message does not match the entered Zone Key attribute, 1 = Not Healthy is reported. For ZIP implementations that use predefined connection instances, this value is 0 = Healthy (the default value) when ZIP is disabled for the instance i.e. when the Zone Connection ID attribute is 0xFFFF. This value is 0 = Healthy when ZIP is disabled via the ZIP Enable class attribute.

3) Zone Point Mask - Allows for the selection of the consumed bytes within a consumed message for use by in the Zone Point Data Table. Each single bit in the mask represents a corresponding byte in the consumed message packet.

4) Zone Point Offset - Allows consumed data to be placed within the Zone Point Data Table. This offset is application-specific. For ArmorStart LT, it represents a byte offset into the Discrete Zone Point Data Table.

5) Zone RPI - The requested packet interval (in milliseconds) of the connection represented by this ZIP object instance. For DeviceNet implementations, this value is placed in the connection object Expected Packet Rate attribute. If a consuming connection does not receive data in 4 times this value, the connection times out, and the Zone Health attribute is set to the value 1 = Not Healthy. For producing connections, the expected packet rate specifies the heartbeat rate.

6) Zone PIT - The Production Inhibit Time (in milliseconds) associated with a connection.

7) Zone Key - For producing instances, this value is calculated by performing a Cyclic Redundancy Check (CRC) on all of the ZIP class and instance attributes, and all other device configuration values deemed necessary to insure the integrity and meaning of ZIP data produced on the network. The Identity Object device keys should always be included in the CRC calculation. For consuming instances, this is the value of the Zone Key calculated in the producing connection whose data is to be consumed. The ZIP consuming connection validates the security key received within each consumed message against this stored value.

8) ZIP Auto Run - When enabled, the producing device creates and configures a producing connection at power-up. For initial ZIP implementations on DeviceNet, a connection is created, and the contents of the Allocation Information attribute in the DeviceNet Object are set accordingly. The connection is no longer available for allocation within the predefined Group 2 connection set. A ZIP consuming device does not have to enable AutoRun ZIP if it is a consumer only or if a scanner is used to allocate the producing connections.

9) Associated Connection Instance - The instance number of the connection object associated with this ZIP instance. Initial DeviceNet implementations of the ZIP object implements this attribute with Get access, and associate ZIP instances with predefined connection instances. Future implementations are allowed to dynamically allocate connections and associate them with a ZIP instance. This attribute would then be implemented with Set access.

10) Connection Path Length - The number of bytes of the "Connection Path" attribute. For consuming connections, this value is written to the consumed_connection_path_length" attribute of the connection object when ZIP is enabled. For producing connections, this value is written to the "produced_connection_path_length" attribute of the connection object when ZIP is enabled.

11) Connection Path - For consuming connections, this attribute specifies the application object that is to receive the consumed data. This value is written to the "consumed_connection_path" attribute of the connection object when ZIP is enabled. For producing connections, this attribute specifies the application object whose data is to be produced. This value is written to the "produced_connection_path" attribute of the connection object when ZIP is enabled.

12) Data Size - The size (in bytes) of the data to be produced or consumed. If any of the "FragmentedIO" bits are set in the Zone Control attribute, this value is 32. If all "FragmentedIO" bits are clear in the Zone control Attributes, then this value is 8.

14) Data Security Disable - Enables/disables data security checking for the connection. Enabling data security protects against a ZIP producer being replaced and not having the correct ZIP configuration set. Enabling data security also protects against the consumption of data from the wrong device type. The default value for this attribute is 0=enabled.

15) Zone Analog Data Type – This attribute defines the analog data type used in the Zone Analog Data Table. Data type value codes are given in the CIP Common Spec Table "Identification Codes and Descriptions of Elementary Data Types". For ArmorStart LT this attribute returns the value 0xC7 = UINT.

16) Zone Analog Mask - Allows for the selection of the consumed data within a consumed message for use by in the Zone Analog Data Table. Each single bit in the mask represents a corresponding piece of analog data in the consumed message packet whose data type is given by the Zone Analog Data Type attribute. For ArmorStart LT, each bit in the Mask represents a WORD of consumed data

17) Zone Analog Offset - Allows consumed data to be placed within the Zone Analog Data Table. This offset is application-specific. For ArmorStart LT, it represents a WORD offset into the Zone Analog Data Table.

101) MAC ID - This attribute is used so that MAC ID can be entered for a consuming instance instead of Zone Connection ID in a EDS file. When this attribute is changed, the Zone Connection ID attribute value is updated to reflect the new Connection ID.

103) Point Mask - This attribute is used so that a mask value of type DWORD can be used in an EDS file parameter for the Zone Point Mask since arrays are not supported in EDS parameters. When this attribute is changed, the Zone Point Mask attribute value is updated to reflect the new mask value.

114) Zone Control - This attribute is used to choose the IO Connection type that is consumed, whether security is enabled and whether the consumed data is fragmented. See parameters 134-137 for the bit enumerations.

116) Analog Mask - This attribute is used so that a mask value of type WORD can be used in an EDS file parameter for the Zone Analog Mask since arrays are not supported in EDS parameters. When this attribute is changed, the Zone Analog Mask attribute value is updated to reflect the new mask value.

The following common services are implemented for the ZIP Object.

Service Code	Implemented for:		Service Name
	Class	Instance	
0x0E	No	Yes	Get_Attribute_Single
0x10	No	Yes	Set_Attribute_Single

Behavior

The ZIP object provides a means for devices on a network to share I/O data directly without hard wiring them together, with, or without the use of a network scanner. A single ZIP enabled device can consume data directly from multiple devices on a network. A ZIP enabled device can also auto-allocate and configure producing I/O connections. In initial DeviceNet ZIP implementations, devices are capable of auto-allocating and configuring unacknowledged COS connections, but the object definition does not preclude the use of other types of I/O connections for data production.

Instances of the ZIP object represent connection endpoints on a network. Two types of ZIP object instances are defined:

- ZIP Producers
- ZIP Consumers

Multiple instances of each instance type can exist, but in initial DeviceNet implementations, a single ZIP Producer is used to allow for the automatic allocation and configuration of an unacknowledged COS connection. The automatic allocation of producing I/O connections only occurs if the Auto Run ZIP attribute for the ZIP Producer is enabled.

When a ZIP Producer is automatically allocated on power-up with the Auto Run Zip attribute set to the value 1=enable, the Master's MAC ID portion of the Allocation Information attribute in the DeviceNet Object is not changed. This indicates that the Predefined Master Slave connection set is still available for allocation by a network master.

The ZIP object also provides a means for ensuring that system configuration is secure. A 16-bit Zone Key instance attribute is calculated for each ZIP Producer, which is based on the device configuration and the Identity Object device key attributes. The Zone Key value is manually read by the user from the ZIP producer and manually written to the Zone Key of the ZIP Consumers that consumes the data as part of the system configuration process.

When the Data Security Enable attribute is enabled, ZIP Producers place the 16-bit Zone Key at the end of each produced I/O message. When security is disabled for a producer, the Zone Key is still placed at the end of each produced I/O message.

ZIP Consumers assume that the last 16 bits of each consumed I/O message contains the Zone Key. When the Data Security Enable attribute is enabled for a consumer, the consumed Zone Key is compared to the ZIP consumer's stored Zone Key. If they do not match, the Zone Health instance attribute is set to 1=not healthy. When security is disabled for a consumer, the consumed Zone Key is ignored.

The selection of I/O Assemblies that contain the 16 bit Zone Key is verified for both producing and consuming connections when ZIP is enabled.

Bulletin 284 CIP Information

Electronic Data Sheets

Electronic Data Sheets (EDS) files are specially formatted ASCII files that provide all of the information necessary for a configuration tool (e.g., RSNetWorx for DeviceNet Revision 3.21 Service Pack 2 or later) to access and alter parameters of the device. The EDS file contains all of the device information: number of parameter, groupings, parameter name, minimum, maximum, and default values, units, data format, and scaling.

EDS files for all the ArmorStart distributed motor controllers units are available from the Internet at **www.ab.com/networks/eds**.

They may also be built automatically by some configuration tools since much of the information necessary for an EDS file may be extracted from the ArmorStart distributed motor controller.

IMPORTANT The correct EDS revision is seen only when the ArmorStart 284 has network, control power, and 3 phase power applied. The EDS revision is a calculation of the VFD firmware and the ArmorStart firmware.

VFD Type Product Codes and Name Strings

Product codes for the Bulletin 284 variable frequency drives are based on the Horse Power rating and Supply Voltage rating of the distributed motor controller. Table 107 lists the product codes and name strings for the Bulletin 284 distributed motor controllers.

Table 107 - Bulletin 284 Product Codes and Name Strings

284D Device Type ❶	Product Code	Hp	Supply Voltage	Name String	Drive Type
22	0x132	0.50	240V AC	ArmorStart 284D PF4 240V 0.5 Hp	PF4
22	0x134	1	240V AC	ArmorStart 284D PF4 240V 1 Hp	PF4
22	0x136	2	240V AC	ArmorStart 284D PF4 240V 2 Hp	PF4
22	0x142	0.50	480V AC	ArmorStart 284D PF4 480V 0.5 Hp	PF4
22	0x144	1	480V AC	ArmorStart 284D PF4 480V 1 Hp	PF4
22	0x146	2	480V AC	ArmorStart 284D PF4 480V 2 Hp	PF4
22	0x147	3	480V AC	ArmorStart 284D PF4 480V 3 Hp	PF4
22	0x148	5	480V AC	ArmorStart 284D PF4 480V 5 Hp	PF4
22	0x1B2	0.50	240V AC	ArmorStart 284D PF40 240V 0.5 Hp	PF40
22	0x1B4	1	240V AC	ArmorStart 284D PF40 240V 1 Hp	PF40
22	0x1B6	2	240V AC	ArmorStart 284D PF40 240V 2 Hp	PF40
22	0x1C2	0.50	480V AC	ArmorStart 284D PF40 480V 0.5 Hp	PF40
22	0x1C4	1	480V AC	ArmorStart 284D PF40 480V 1 Hp	PF40
22	0x1C6	2	480V AC	ArmorStart 284D PF40 480V 2 Hp	PF40
22	0x1C7	3	480V AC	ArmorStart 284D PF40 480V 3 Hp	PF40
22	0x1C8	5	480V AC	ArmorStart 284D PF40 480V 5 Hp	PF40
22	0x1D4	1	600V AC	ArmorStart 284D PF40 600V 1 Hp	PF40
22	0x1D6	2	600V AC	ArmorStart 284D PF40 600V 2 Hp	PF40
22	0x1D7	3	600V AC	ArmorStart 284D PF40 600V 3 Hp	PF40
22	0x1D8	4	600V AC	ArmorStart 284D PF40 600V 5 Hp	PF40

❶ 22= Motor Starter

DeviceNet Objects

The ArmorStart distributed motor controller supports the following DeviceNet object classes:

Table 108 - DeviceNet Object Classes

Class	Object
0x0001	Identity
0x0002	Message Router
0x0003	DeviceNet
0x0004	Assembly
0x0005	Connection
0x0008	Discrete Input Point
0x0009	Discrete Output Point
0x000F	Parameter Object
0x0010	Parameter Group Object
0x001D	Discrete Input Group
0x001E	Discrete Output Group
0x0029	Control Supervisor
0x002B	Acknowledge Handler
0x00B4	DN Interface Object

Identity Object — CLASS CODE 0x0001

The following class attributes are supported for the Identity Object:

Table 109 - Identity Object Class Attributes

Attribute ID	Access Rule	Name	Data Type	Value
1	Get	Revision	UINT	1

Identity Object

A single instance of the Identity Object is supported. The following instance attributes are supported:

Table 110 - Identity Object Instance Attributes

Attribute ID	Access Rule	Name	Data Type	Value
1	Get	Vendor	UINT	1
2	Get	Device Type	UINT	22 or 133
3	Get	Product Code	UINT	See Table 107
4	Get	Revision Major Revision Minor Revision	Structure of: USINT USINT	Indicates Software Firmware Revision Number
5	Get	Status	WORD	Bit 0: 0 = not owned; 1 = owned by master Bit 2: 0 = Factory Defaulted; 1 = Configured Bit 8: Minor Recoverable fault Bit 9: Minor Unrecoverable fault Bit 10: Major Recoverable fault Bit 11: Major Unrecoverable fault
6	Get	Serial Number	UDINT	Unique Number for Each Device
7	Get	Product Name String Length ASCII String	Structure of: USINT STRING	Product code specific See Table 107.
8	Get	State	USINT	Returns the value **3 = Operational**
9	Get	Configuration Consistency Value	UINT	Unique value depending on output of the parameter checksum algorithm.
10	Get/Set	Heartbeat Interval	USINT	In seconds. Default = 0

The following common services are implemented for the Identity Object:

Table 111 - Identity Object Common Services

Service Code	Implemented for		Service Name
	Class	Instance	
0x0E	No	Yes	Get_Attribute_Single
0x05	No	Yes	Reset
0x10	No	Yes	Set_Attribute_Single

Message Router — CLASS CODE 0x0002

No class or instance attributes are supported. The message router object exists only to rout explicit messages to other objects.

DeviceNet Object — CLASS CODE 0x0003

The following class attributes are supported for the DeviceNet Object:

Table 112 - DeviceNet Object Class Attributes

Attribute ID	Access Rule	Name	Data Type	Value
1	Get	Revision	UINT	2

A single instance (Instance 1) of the DeviceNet Object is supported. The following instance attributes are supported:

Table 113 - DeviceNet Object Instance Attributes

Attribute ID	Access Rule	Name	Data Type	Value
1	Get/Set	Node Address	USINT	0…63
2	Get/Set	Baud Rate	USINT	0 = 125K 1 = 250K 2 = 500K 3 = 1M
5	Get	Allocation Info • Allocation Choice • Master Node Addr	Structure of: • BYTE • USINT	Allocation_byte ❶ 0…63 = address 255 = unallocated
8	Get	MAC ID Switch Value	BOOL	0…63

❶ See Table 114

Table 114 - Allocation_byte

Bit 0	Explicit messaging
Bit 1	Polled I/O
Bit 4	COS I/O
Bit 5	Cyclic I/O
Bit 6	Acknowledge Suppression

The following services are implemented for the DeviceNet Object:

Table 115 - DeviceNet Object Common Services

Service Code	Implemented for		Service Name
	Class	Instance	
0x0E	Yes	Yes	Get_Attribute_Single
0x10	No	Yes	Set_Attribute_Single
0x4B	No	Yes	Allocate_Master/Slave _Connection_Set
0x4C	No	Yes	Release_Master/Slave _Connection_Set

Assembly Object — CLASS CODE 0x0004

The following class attributes are supported for the Assembly Object:

Table 116 - DeviceNet Assembly Object:

Attribute ID	Access Rule	Name	Data Type	Value
2	Get	Max Instance	UINT	190

All of the various instances of the assembly object support Attribute 3. Table 117 summarizes the various instances that are supported.

Table 117 - DeviceNet Assembly Object Instance Attributes:

Attribute ID	Type	Description
3	Consumed	Required ODVA Consumed Instance
52	Produced	Required ODVA Produced Instance
120	Produced	Custom Parameter Based Word Wise Assembly
160	Consumed	Default Consumed Instance for DOL and SoftStart units
161	Produced	Default Produced Instance for DOL and SoftStart units
162	Consumed	Standard Consumed Instance for DOL and SoftStart with Network Inputs
163	Produced	Standard Produced Instance for DOL and SoftStart with Network Outputs
164	Consumed	Default Consumed Instance for Inverter type units
165	Produced	Default Produced Instance for Inverter type units
166	Consumed	Standard Consumed Instance for Inverter type units with Network Inputs
167	Produced	Standard Produced Instance for Inverter type units with Network Outputs
170	Consumed	PowerFlex Native Format Consumed Instance
171	Produced	PowerFlex Native Format Produced Instance
181	Produced	User Inputs
182	Consumed	Consumed Network Bits (a.k.a Network Inputs)
183	Produced	Produced Network Bits (a.k.a. Network Outputs)
184	Produced	Trip Status Bits
185	Produced	Starter Status Bits
186	Produced	DeviceNet Status Bits
187	Consumed	Starter Control Bits
188	Consumed	Drive Control Bits
189	Produced	Warning Status Bits
190	Produced	1799 - ZCIO Bits

Custom Parameter-Based Word-Wise I/O Assembly

Table 118 - Custom Parameter-Based Word Wise (Produced) Assembly Instance

Instance 120									
Word	**Byte**	**Bit 7**	**Bit 6**	**Bit 5**	**Bit 4**	**Bit 3**	**Bit 2**	**Bit 1**	**Bit 0**
0	0	Value of the parameter pointed to by **Produced Word 0 Param** (low byte)							
	1	Value of the parameter pointed to by **Produced Word 0 Param** (high byte)							
1	2	Value of the parameter pointed to by **Produced Word 1 Param** (low byte)							
	3	Value of the parameter pointed to by **Produced Word 1 Param** (high byte)							
2	4	Value of the parameter pointed to by **Produced Word 2 Param** (low byte)							
	5	Value of the parameter pointed to by **Produced Word 2 Param** (high byte)							
3	6	Value of the parameter pointed to by **Produced Word 3 Param** (low byte)							
	7	Value of the parameter pointed to by **Produced Word 3 Param** (high byte)							

Word-Wise Bit-Packed Assemblies

Assemblies whose instance numbers are 180...189 are all one word (16 bits) long. They can be used stand-alone, but their main use is to assemble information for EDS file parameters. These Word-Wise assemblies become the building blocks for the Custom Parameter-Based Word-Wise assembly described in Table 118.

Table 119 - Instance 181 — Hardware Inputs 1…16

Instance 181 — This is a Read Only Status Assembly								
Byte	**Bit 7**	**Bit 6**	**Bit 5**	**Bit 4**	**Bit 3**	**Bit 2**	**Bit 1**	**Bit 0**
0	—	—	—	—	Input 4	Input 3	Input 2	Input 1
1	—	—	—	—	—	—	—	—

Table 120 - Instance 182 — Consumed Network Inputs 1…16

Instance 182 — This is a Read/Write Control Assembly								
Byte	**Bit 7**	**Bit 6**	**Bit 5**	**Bit 4**	**Bit 3**	**Bit 2**	**Bit 1**	**Bit 0**
0	Net Input 8	Net Input 7	Net Input 6	Net Input 5	Net Input 4	Net Input 3	Net Input 2	Net Input 1
1	Net Input 16	Net Input 15	Net Input 14	Net Input 13	Net Input 12	Net Input 11	Net Input 10	Net Input 9

Table 121 - Instance 183 — Produced Network Outputs 1…15

Instance 183 — This is a Read Only Status Assembly								
Byte	**Bit 7**	**Bit 6**	**Bit 5**	**Bit 4**	**Bit 3**	**Bit 2**	**Bit 1**	**Bit 0**
0	Net Out 8	Net Out 7	Net Out 6	Net Out 5	Net Out 4	Net Out 3	Net Out 8	Net Out 1
1	Reserved	Net Out 15	Net Out 14	Net Out 13	Net Out 12	Net Out 11	Net Out 10	Net Out 9

Table 122 - Instance 184 — Trip Status

Instance 184 — This is a Read Only Status Assembly								
Byte	**Bit 7**	**Bit 6**	**Bit 5**	**Bit 4**	**Bit 3**	**Bit 2**	**Bit 1**	**Bit 0**
0	Over Temp	IO Fault	Control Power	Stall	Gnd Fault	Phase Short	OL Trip	140M Trip
1	Misc. Fault	Retries	HW Fault	EEPROM	DC Bus	Int Comm	DNet Flt	Over Current

Table 123 - Instance 185 — Starter Status

Instance 185 — This is a Read Only Status Assembly								
Byte	**Bit 7**	**Bit 6**	**Bit 5**	**Bit 4**	**Bit 3**	**Bit 2**	**Bit 1**	**Bit 0**
0	At Reference	Net Ref Status	Net Ctl Status	Ready	Running Rev	Running Fwd	Alarm	Tripped
1	Contactor 2 ❷	Contactor 1 ❸	140M On	HOA Status	KP Hand	KP Jog	DrvOpto2	DrvOpto1

❷ Refers to output contactor status.
❸ Refers to source brake contactor status.

Table 124 - Instance 186 — DeviceNet Status

Instance 186 — This is a Read Only Status Assembly								
Byte	**Bit 7**	**Bit 6**	**Bit 5**	**Bit 4**	**Bit 3**	**Bit 2**	**Bit 1**	**Bit 0**
0	—	—	—	I/O Idle	I/O Flt	Exp Flt	I/O Cnxn	Exp Cnxn
1	ZIP 4 Flt	ZIP 4 Cnxn	ZIP 3 Flt	ZIP 3 Cnxn	ZIP 2 Flt	ZIP 2 Cnxn	ZIP 1 Flt	ZIP 1 Cnxn

Instance 187 — This is a Read/Write Assembly								
Byte	**Bit 7**	**Bit 6**	**Bit 5**	**Bit 4**	**Bit 3**	**Bit 2**	**Bit 1**	**Bit 0**
0	User Out B	User Out A	—	Jog Rev	Jog Fwd	Fault Reset	Run Rev	Run Fwd
1	—	—	—	—	—	—	—	—

Instance 188 — This is a Read/Write Assembly								
Byte	**Bit 7**	**Bit 6**	**Bit 5**	**Bit 4**	**Bit 3**	**Bit 2**	**Bit 1**	**Bit 0**
0	—	Freq Select 3	Freq Select 2	Freq Select 1	Decel 2	Decel 1	Accel 2	Accel 1
1	—	—	—	—	Drv In 4	Drv In 3	Drv In 2	Drv In 1

Table 125 - Instance 189 This is a "Read Only" assembly

Instance 189 Warning Status Bits								
Byte	**Bit 7**	**Bit 6**	**Bit 5**	**Bit 4**	**Bit 3**	**Bit 2**	**Bit 1**	**Bit 0**
0	Reserved	I/O Warning	Control Power Warning	—	—	—	—	—
1	—	—	HW Warn	—	—	—	DN Warn	PI Warn

Table 126 - Instance 190 is the 1999-ZCIO Native Format Produced Assembly

Instance 190 1799-ZCIO Native Format Produced Assembly								
Byte	**Bit 7**	**Bit 6**	**Bit 5**	**Bit 4**	**Bit 3**	**Bit 2**	**Bit 1**	**Bit 0**
0	Running Rev	Running Fwd	Warning	Tripped	Input 3	Input 2	Input 1	Input 0
1	Reserved	Logic Enable	Reserved				140M On	HOA
2	Drive In 4	Drive In 3	Drive In 2	Drive In 1	User Out B	User Out A	Run Rev	Run Fwd
3	Reserved						Jog Rev	Jog Fwd
4	Net Out 8	Net Out 7	Net Out 6	Net Out 5	Net Out 4	Net Out 3	Net Out 2	Net Out 1
5	ZIP CCV (Low)							
6	ZIP CCV (High)							

Standard Distributed Motor Controller I/O Assemblies

Standard distributed motor controller I/O Assemblies are available on all Starter Types.

Standard Distributed Motor Controller Output (Consumed) Assemblies

Instance 3 is the required output (consumed) assembly defined in the DeviceNet Motor Starter Profile.

Table 127 - ODVA Starter

Byte	Bit 7	Bit 6	Bit 5	Bit 4	Bit 3	Bit 2	Bit 1	Bit 0
0	—	—	—	—	—	—	—	Run Fwd

Instance 160 is the default output (consumed) assembly for Bulletin 280, 281 distributed motor controllers.

Table 128 - Instance 160 — Default Consumed Standard Distributed Motor Controller.

Byte	Bit 7	Bit 6	Bit 5	Bit 4	Bit 3	Bit 2	Bit 1	Bit 0
0	User Out B	User Out A	—	—	—	Fault Reset	Run Rev	Run Fwd

Instance 162 is the standard output (consumed) assembly with Network Inputs for Bulletin 280, 281 distributed motor controllers.

Table 129 - Standard Consumed Starter with Network Inputs.

Byte	Bit 7	Bit 6	Bit 5	Bit 4	Bit 3	Bit 2	Bit 1	Bit 0
0	User Out B	User Out A	—	—	—	Fault Reset	Run Rev	Run Fwd
1	Net In 8	Net In 7	Net In 6	Net In 5	Net In 4	Net In 3	Net In 2	Net In 1
2	Net In 16	Net In 15	Net In 14	Net In 13	Net In 12	Net In 11	Net In 10	Net In 9

Bulletin 284 Distributed Motor Controller I/O Assemblies

Bulletin 284 distributed motor controller I/O Assemblies are available ONLY on the Bulletin 284 distributed motor controller.

Standard Distributed Motor Controller Output (Consumed) Assemblies

Instance 164 is the default output (consumed) assembly for Inverter Type distributed motor controllers.

Table 130 - Instance 164 — Default Consumed Inverter Type Distributed Motor Controller.

Byte	Bit 7	Bit 6	Bit 5	Bit 4	Bit 3	Bit 2	Bit 1	Bit 0
0	User Out B	User Out A	—	Jog Rev	Jog Fwd	Fault Reset	Run Rev	Run Fwd
1	Drive In 4	Drive In 3	Drive In 2	Drive In 1	Decel 2	Decel 1	Accel 2	Accel 1
2	Comm Frequency Command (Low) (xxx.x Hz)							
3	Comm Frequency Command (High) (xxx.x Hz)							

Instance 166 is the standard output (consumed) assembly for Inverter Type distributed motor controllers with network inputs.

Table 131 - Instance 166 — Consumed Inverter Type Starter with Network Inputs

Byte	Bit 7	Bit 6	Bit 5	Bit 4	Bit 3	Bit 2	Bit 1	Bit 0
0	User Out B	User Out A	—	Jog Rev	Jog Fwd	Fault Reset	Run Rev	Run Fwd
1	Drive In 4	Drive In 3	Drive In 2	Drive In 1	Decel 2	Decel 1	Accel 2	Accel 1
2	Comm Frequency Command (Low) (xxx.x Hz)							
3	Comm Frequency Command (High) (xxx.x Hz)							
4	Net In 8	Net In 7	Net In 6	Net In 5	Net In 4	Net In 3	Net In 2	Net In 1
5	Net In 16	Net In 15	Net In 14	Net In 13	Net In 12	Net In 11	Net In 10	Net In 9

Standard Distributed Motor Controller Input (Produced) Assemblies

Instance 52 is the required input (produced) assembly defined in the DeviceNet Motor Starter Profile.

Table 132 - Instance 52 — ODVA Starter.

Byte	Bit 7	Bit 6	Bit 5	Bit 4	Bit 3	Bit 2	Bit 1	Bit 0
—	—	—	—	—	—	Running	—	Fault

Instance 161 is the default input (produced) assembly for the Bulletin 280, 281 distributed motor controller.

Table 133 - Instance 161 — Default Produced Standard Distributed Motor.

Byte	Bit 7	Bit 6	Bit 5	Bit 4	Bit 3	Bit 2	Bit 1	Bit 0
0	—	—	—	Ready	Running Rev	Running Fwd	—	Tripped
1	—	—	140M On	HOA Stat.	User In 3	User In 2	User In 1	User In 0

Instance 163 is the standard input (produced) assembly with Network Outputs for the Bulletin 280, 281 distributed motor controller.

Table 134 - Instance 163 — Standard Produced Starter with Network Outputs.

Byte	Bit 7	Bit 6	Bit 5	Bit 4	Bit 3	Bit 2	Bit 1	Bit 0
0	—	—	—	Ready	Running Rev	Running Fwd	Alarm	Tripped
1	—	—	140M On	HOA	User In 4	User In 3	User In 2	User In 1
2	Net Out 8	Net Out 7	Net Out 6	Net Out 5	Net Out 4	Net Out 3	Net Out 2	Net Out 1
3	Logic Enable Stat	Net Out 15	Net Out 14	Net Out 13	Net Out 12	Net Out 11	Net Out 10	Net Out 9
4	ZIP Device Value Key (Low)							
5	ZIP Device Value Key (High)							

Inverter Type Distributed Motor Controller Input (Produced) Assemblies

Instance 165 is the default input (produced) assembly for Inverter Type distributed motor controllers.

Table 135 - Default Produced Inverter Type Distributed Motor Controller.

Byte	Bit 7	Bit 6	Bit 5	Bit 4	Bit 3	Bit 2	Bit 1	Bit 0
0	At Reference	Net Ref Status	Net Ctl Status	Ready	Running Rev	Running Fwd	Alarm	Tripped
1	Contactor 2 ❶	Contactor 1 ❷	140M On	HOA	User In 4	User In 3	User In 2	User In 1
2	Output Frequency (Low) (xxx.x Hz)							
3	Output Frequency (High) (xxx.x Hz)							

❶ Refers to output contactor status.
❷ Refers to source brake contactor status.

Instance 167 is input (produced) assembly for Inverter Type distributed motor controllers with Network Outputs.

Table 136 - .Instance 167 —Produced Inverter Type Starter with Network Options

Byte	Bit 7	Bit 6	Bit 5	Bit 4	Bit 3	Bit 2	Bit 1	Bit 0
0	At Reference	Net Ref Status	Net Ctl Status	Ready	Running Rev	Running Fwd	Alarm	Tripped
1	Contactor 2 ❶	Contactor 1 ❷	140M On	HOA Status	User In 4	User In 3	User In 2	User In 1
2	Output Frequency (Low) (xxx.x Hz)							
3	Output Frequency (High) (xxx.x Hz)							
4	Net Out 8	Net Out 7	Net Out 6	Net Out 5	Net Out 4	Net Out 3	Net Out 2	Net Out 1
5	—	Net Out 15	Net Out 14	Net Out 13	Net Out 12	Net Out 11	Net Out 10	Net Out 9
6	ZIP Device Value Key (Low)							
7	ZIP Device Value Key (High)							

❶ Refers to output contactor status.
❷ Refers to source brake contactor status.

PowerFlex Native Assemblies

These assembly instances have the same data format as the PowerFlex Drives with a DNet adapter.

Power Flex Native Consumed Assembly

Instance 170 is the PowerFlex Native Format Consumed Assembly.

Table 137 - Instance 170 — PowerFlex Native Format Consumed Assembly.

Byte	Bit 7	Bit 6	Bit 5	Bit 4	Bit 3	Bit 2	Bit 1	Bit 0
0	MOP Inc	reserved	Direction Cmd		Flt Reset	Jog	Start	Stop
1	MOP Dec	Freq Select 3	Freq Select 2	Freq Select 1	Decel 2	Decel 1	Accel 2	Accel 1
2	Comm Frequency Command (Low)							
3	Comm Frequency Command (High)							

Table 138 - Logic Command

Accel 2	Accel 1	—	Description
0	0	—	No Command
0	1	—	Accel 1 Enable
1	0	—	Accel 2 Enable
1	1	—	Hold Accel Rate Selected
Decel 2	**Decel 1**	**—**	—
0	0	—	No Command
0	1	—	Decel 1 Enable
1	0	—	Decel 2 Enable
1	1	—	Hold Decel Rate Selected
Freq Select 3	**Freq Select 2**	**Freq Select 1**	—
0	0	0	No Command
0	0	1	Freq Source = P136 (Start Source)
0	1	0	Freq Source = P169 (Internal Freq)
0	1	1	Freq Source = Comms
1	0	0	P170 (Preset Freq 0)
1	0	1	P171 (Preset Freq 1)
1	1	0	P172 (Preset Freq 2)
1	1	1	P173 (Preset Freq 3)

Power Flex Native Produced Assembly

Instance 171 is the PowerFlex Native Format Produced Assembly.

Table 139 - Instance 171 — PowerFlex Native Format Produced Assembly

Byte	Bit 7	Bit 6	Bit 5	Bit 4	Bit 3	Bit 2	Bit 1	Bit 0
0	Faulted	Alarm	Deceling	Acceling	Rot Fwd	Cmd Fwd	Running	Ready
1	Drv In 4 Stat	Drv In 3 Stat	Drv In 2 Stat	Drv In 1	Param Locked	Ctl fm Net	Ref fm Net	At Ref
2	Drive Error Code (low)							
3	Drive Error Code (high)							

Connection Object — CLASS CODE 0x0005

No class attributes are supported for the Connection Object.

Multiple instances of the Connection Object are supported, Instances 1, 2, and 4 from the Group 2 predefined master/slave connection set, Instances 5 and 6 are available explicit UCMM connections.

Instance 1 is the Predefined Group 2 Connection Set Explicit Message Connection. The following Instance 1 attributes is supported:

Table 140 - Connection Object Instance 1 Attributes:

Attribute ID	Access Rule	Name	Data Type	Value
1	Get	State	USINT	0 = non-existent 1 = configuring 3 = established 4 = timed out
2	Get	Instance Type	USINT	0 = Explicit Message
3	Get	Transport Class Trigger	USINT	0x83 — Server, Transport Class 3
4	Get	Produced Connection ID	UINT	10xxxxxx011 xxxxxx = node address
5	Get	Consumed Connection ID	UINT	10xxxxxx100 xxxxxx = node address
6	Get	Initial Comm Characteristics	USINT	0x22
7	Get	Produced Connection Size	UINT	0x61
8	Get	Consumed Connection Size	UINT	0x61
9	Get/Set	Expected Packet Rate	UINT	in milliseconds
12	Get	Watchdog Action	USINT	01 = auto delete 03 = deferred delete
13	Get	Produced Connection Path Length	UINT	0
14	Get	Produced Connection Path	—	Empty
15	Get	Consumed Connection Path Length	UINT	0
16	Get	Consumed Connection Path	—	Empty

Instance 2 is the Predefined Group 2 Connection Set Polled I/O Message Connection. The following Instance 2 attributes are supported:

Table 141 - Connection Object Instance 2 Attributes:

Attribute ID	Access	Name	Data Type	Value
1	Get	State	USINT	0 = non-existent 1 = configuring 3 = established 4 = timed out
2	Get	Instance Type	USINT	1 = I/O Connection
3	Get	Transport Class Trigger	USINT	0x82 — Server, Transport Class 2 (If alloc_choice != polled and ack suppression is enabled then value = 0x80)
4	Get	Produced Connection ID	UINT	01111xxxxxx xxxxxx = node address
5	Get	Consumed Connection ID	UINT	10xxxxxx101 xxxxxx = node address
6	Get	Initial Comm Characteristics	USINT	0x21
7	Get	Produced Connection Size	UINT	0…8
8	Get	Consumed Connection Size	UINT	0…8
9	Get/Set	Expected Packet Rate	UINT	in milliseconds
12	Get/Set	Watchdog Action	USINT	0 = transition to timed out 1 = auto delete 2 = auto reset
13	Get	Produced Connection Path Length	UINT	8
14	Get/Set	Produced Connection Path	—	21 04 00 25 (assy inst) 00 30 03
15	Get	Consumed Connection Path Length	UINT	8
16	Get/Set	Consumed Connection Path	—	21 04 00 25 (assy inst) 00 30 03

Instance 4 is the Predefined Group 2 Connection Set Change of State/Cyclic I/O Message Connection. The following Instance 4 attributes are supported.

Table 142 - Connection Object Instance 4 Attributes:

Attribute ID	Access Rule	Name	Data Type	Value
1	Get	State	USINT	0 = non-existent 1 = configuring 3 = established 4 = timed out
2	Get	Instance Type	USINT	1 = I/O Connection
3	Get	Transport Class Trigger	USINT	0x00 (Cyclic, unacknowledged) 0x03 (Cyclic, acknowledged) 0x10 (COS, unacknowledged) 0x13 (COS, acknowledged)
4	Get	Produced Connection ID	UINT	01101xxxxxx xxxxxx = node address
5	Get	Consumed Connection ID	UINT	10xxxxxx101 xxxxxx = node address
6	Get	Initial Comm Characteristics	USINT	0x02 (acknowledged) 0x0F (unacknowledged)
7	Get	Produced Connection Size	UINT	0…8
8	Get	Consumed Connection Size	UINT	0…8
9	Get/Set	Expected Packet Rate	UINT	in milliseconds
12	Get	Watchdog Action	USINT	0 = transition to timed out 1 = auto delete 2 = auto reset
13	Get	Produced Connection Path Length	UINT	8
14	Get	Produced Connection Path	—	21 04 00 25 (assy inst) 00 30 03
15	Get	Consumed Connection Path Length	UINT	8
16	Get/Set	Consumed Connection Path	—	21 04 00 25 (assy inst) 00 30 03

Instances 5...6 are available Group 3 explicit message connections that are allocated through the UCMM. The following attributes are supported:

Table 143 - Connection Object Instance 5...7 Attributes:

Attribute ID	Access Rule	Name	Data Type	Value
1	Get	State	USINT	0 = non-existent 1 = configuring 3 = established 4 = timed out
2	Get	Instance Type	USINT	0 = Explicit Message
3	Get	Transport Class Trigger	USINT	0x83 — Server, Transport Class 3
4	Get	Produced Connection ID	UINT	Depends on message group and Message ID
5	Get	Consumed Connection ID	UINT	Depends on message group and Message ID
6	Get	Initial Comm Characteristics	USINT	0x33 (Group 3)
7	Get	Produced Connection Size	UINT	0
8	Get	Consumed Connection Size	UINT	—
9	Get/Set	Expected Packet Rate	UINT	in milliseconds
12	Get	Watchdog Action	USINT	01 = auto delete 03 = deferred delete
13	Get	Produced Connection Path Length	UINT	0
14	Get	Produced Connection Path	—	Empty
15	Get	Consumed Connection Path Length	UINT	0
16	Get	Consumed Connection Path	—	Empty

Instances 8...11 are ZIP Consumers. The following instance attributes are supported:

Table 144 - Connection Object instance 8...11 Attributes

Attribute ID	Access Rule	Name	Data Type	Value
1	Get	State	USINT	0=nonexistant 1=configuring 3=established
2	Get	Instance Type	USINT	1=I/O Connection
3	Get	Transport Class Trigger	USINT	0x20 (COS, unacknowledged)
4	Get	Produced Connection ID	UINT	FFFF (not producing data)
5	Get	Consumed Connection ID	UINT	01101xxxxxx xxxxxx=node address
6	Get	Initial Comm Characteristics	USINT	0xF0 (unacknowledged)
7	Get	Produced Connection Size	UINT	0
8	Get	Consumed Connection Size	UINT	8
9	Get/Set	Expected Packet Rate	UINT	in milliseconds
12	Get	Watchdog Action	USINT	2=auto reset
13	Get	Produced Connection Path Length	UINT	0
14	Get	Produced Connection Path	—	0
15	Get	Consumed Connection Path Length	UINT	8
16	Get	Consumed Connection Path	—	21 0E 03 25 01 00 30 02

The following services are implemented for the Connection Object:

Table 145 - Connection Objects Common Services:

Service Code	Implemented for		Service Name
	Class	Instance	
0x05	No	Yes	Reset
0x0E	No	Yes	Get_Attribute_Single
0x10	No	Yes	Set_Attribute_Single

Discrete Input Point Object — CLASS CODE 0x0008

The following class attributes are supported for the Discrete Input Point Object:

Table 146 - Discrete Input Point Object Class Attributes:

Attribute ID	Access Rule	Name	Data Type	Value
1	Get	Revision	UINT	2
2	Get	Max Instance	UINT	4

Four instances of the Discrete Input Point Object are supported. All instances contain the following attributes:

Table 147 - Discrete Input Point Object Instance Attributes:

Attribute ID	Access Rule	Name	Data Type	Value
3	Get	Value	BOOL	0 = OFF, 1 = ON
115	Get/Set	Force Enable	BOOL	0 = Disable, 1 = Enable
116	Get/Set	Force Value	BOOL	0 = OFF, 1 = ON

The following common services are implemented for the Discrete Input Point Object:

Table 148 - Discrete Input Point Object Instance Common Services:

Service Code	Implemented for		Service Name
	Class	Instance	
0x0E	Yes	Yes	Get_Attribute_Single
0x10	No	Yes	Set_Attribute_Single

Discrete Output Point Object — CLASS CODE 0x0009

The following class attributes are supported for the Discrete Output Point Object:

Table 149 - Discrete Output Point Object Class Attributes

Attribute ID	Access Rule	Name	Data Type	Value
1	Get	Revision	UINT	1
2	Get	Max Instance	UINT	10

Ten instances of the Discrete Output Point Object are supported. Table 150 summarizes the DOP instances.

Table 150 - Discrete Output Point Object Instance Attributes

Instance ID	Name	Alternate Mapping	Description
1	Run Fwd Output	0029 – 01 – 03	Run Forward output. For all starter types, this output is hard wired from the ArmorStart CPU to the actuator
2	Run Rev Output	0029 – 01 – 04	Run Reverse output. For all starter types, this output is hard wired from the ArmorStart CPU to the actuator
3	User Output 1	none	These are the two ArmorStart user outputs.
4	User Output 2	none	
5	Drive Input 1	none	These four instances exist for Inverter units only. They are connected to Drive Inputs 1…4.
6	Drive Input 2	none	
7	Drive Input 3	none	
8	Drive Input 4	none	
9	Drive Jog Fwd	none	This instances exists for Inverter units only
10	Drive Jog Rev	none	

All instances contain the following attributes:

Table 151 - Discrete Output Point Instance Attributes.

Attribute ID	Access Rule	Name	Data Type	Value
3	Get	Value	BOOL	0 = OFF, 1 = ON
5	Get/Set	Fault Action	BOOL	0 = Fault Value attribute, 1 = Hold Last State
6	Get/Set	Fault Value	BOOL	0 = OFF, 1 = ON
7	Get/Set	Idle Action	BOOL	0 = Fault Value attribute, 1 = Hold Last State
8	Get/Set	Idle Value	BOOL	0 = OFF, 1 = ON
113	Get/Set ❶	Pr Fault Action	BOOL	0 = Pr Fault Value attribute, 1 = Ignore
114	Get/Set ❶	Pr Fault Value	BOOL	0 = OFF, 1 = ON
115	Get/Set	Force Enable	BOOL	0 = Disable, 1 = Enable
116	Get/Set	Force Value	BOOL	0 = OFF, 1 = ON

❶ For DOP Instances 1 and 2, and 9 and 10, Attributes 113 and 114 have Get only access, and their values are always 0

The following common services are implemented for the Discrete Output Point Object:

Table 152 - Discrete Output Common Services:

Service Code	Implemented for		Service Name
	Class	Instance	
0x0E	No	Yes	Get_Attribute_Single
0x10	No	Yes	Set_Attribute_Single

Discrete Output Point Object Special Requirements

DOP Instances 3 and 4 Special Behavior

There are many sources that can affect an output point's value: an I/O message, and explicit message, local logic, network fault and idle conditions, and protection fault conditions. An output point must know how to select which source of data to use to drive its value attribute.

An output that is not bound behaves much the same as in the DeviceNet Specification. One notable addition to DOP behavior for the ArmorStart implementation is the Protection Fault Action and Protection Fault Value attributes determine the behavior of the DOP when the ArmorStart faults on a protection fault.

The following State Transition Diagram is used for Unbound DOP Instances 3...8 when they are not used in a Devicelogix Program:

Figure 84 - State Transition Diagram — Unbound DOP 3…8

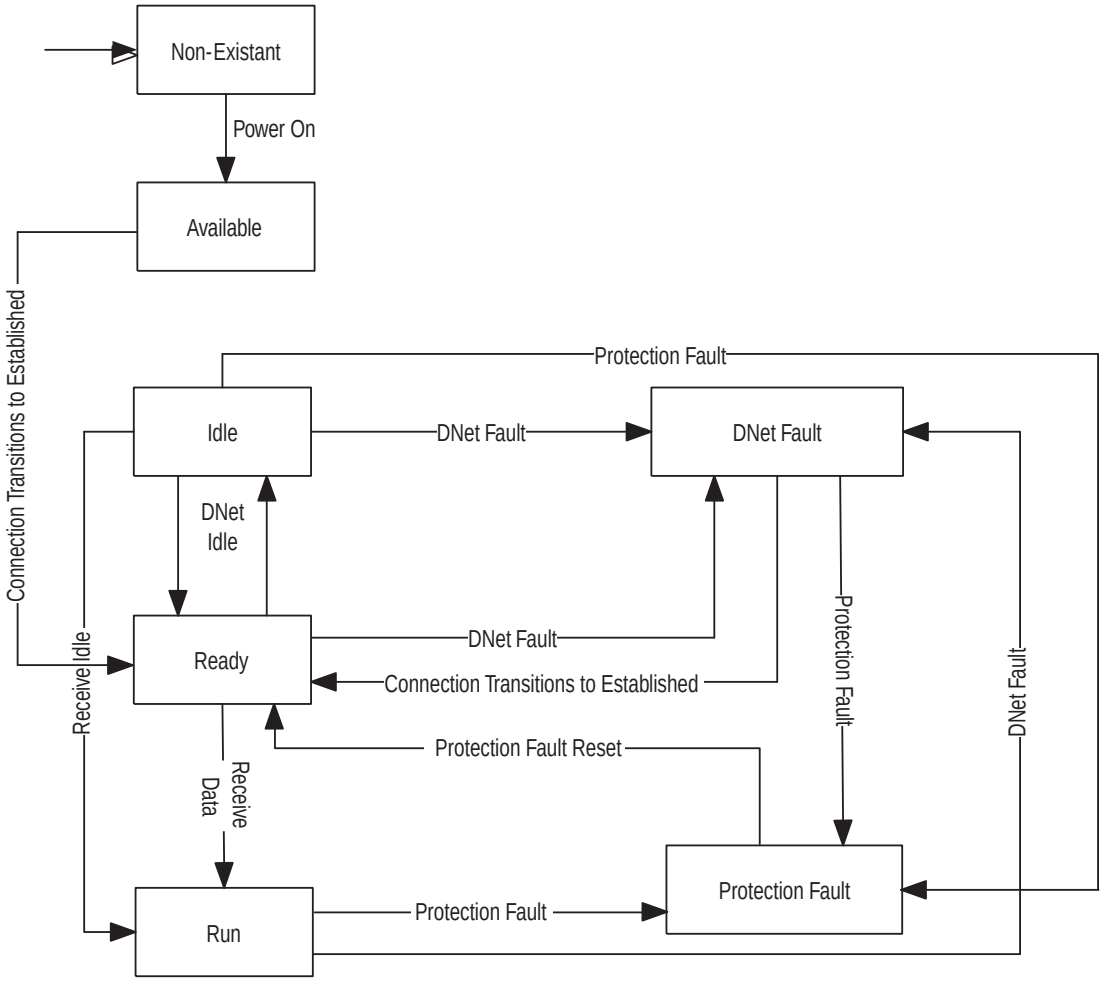

DOP Instances 1, 2, 9, and 10 Special Behavior

Besides the sources that can affect output points 3 and 4, DOPs 1 and 2 can be affected by keypad inputs since they double as the Run Forward and Run Reverse outputs. This adds complexity to their behavior, so their behavior is defined in this section separately.

The following State Transition Diagram is used for DOP Instances 1, 2, 9, and 10:

Figure 85 - DOP Instances 1, 2, 9, and 10

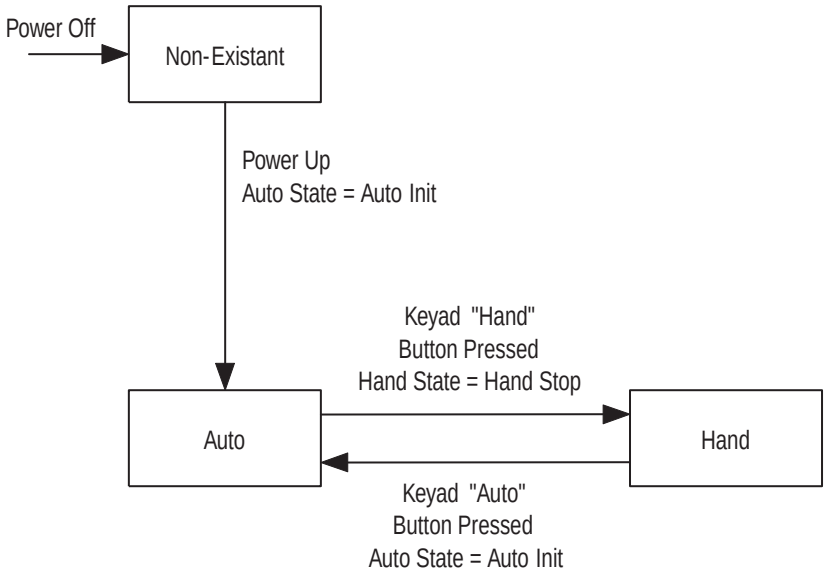

The following State Transition Diagram is used in Auto State for Unbound DOP Instances 1, 2, 9, and 10:

Figure 86 - Auto State for Unbound DOP Instances 1, 2, 9, and 10

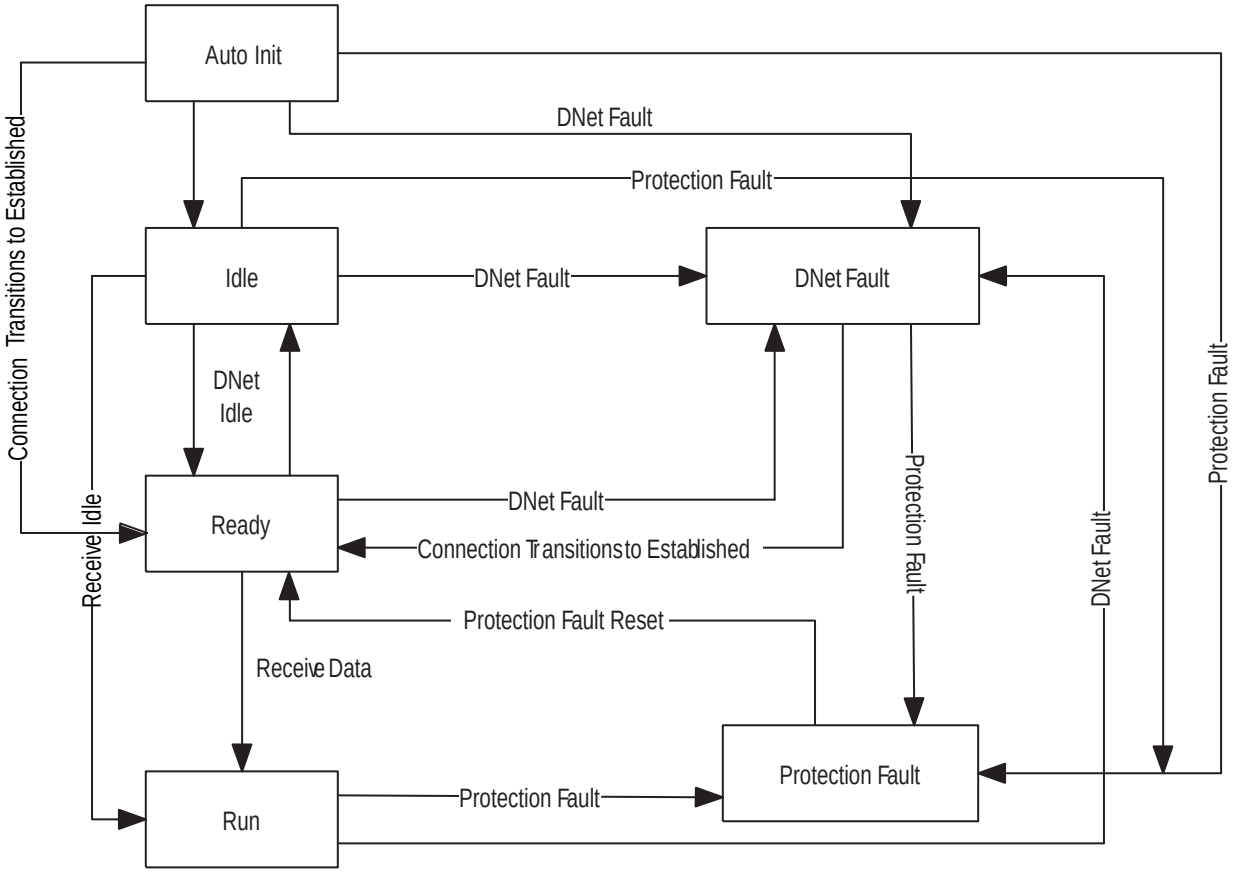

The following State Transition Diagram is used in Hand State for Bound or Unbound DOPs 1, 2, 9, and 10 with Parameter 45 Keypad Mode set to 1 = momentary:

Figure 87 -

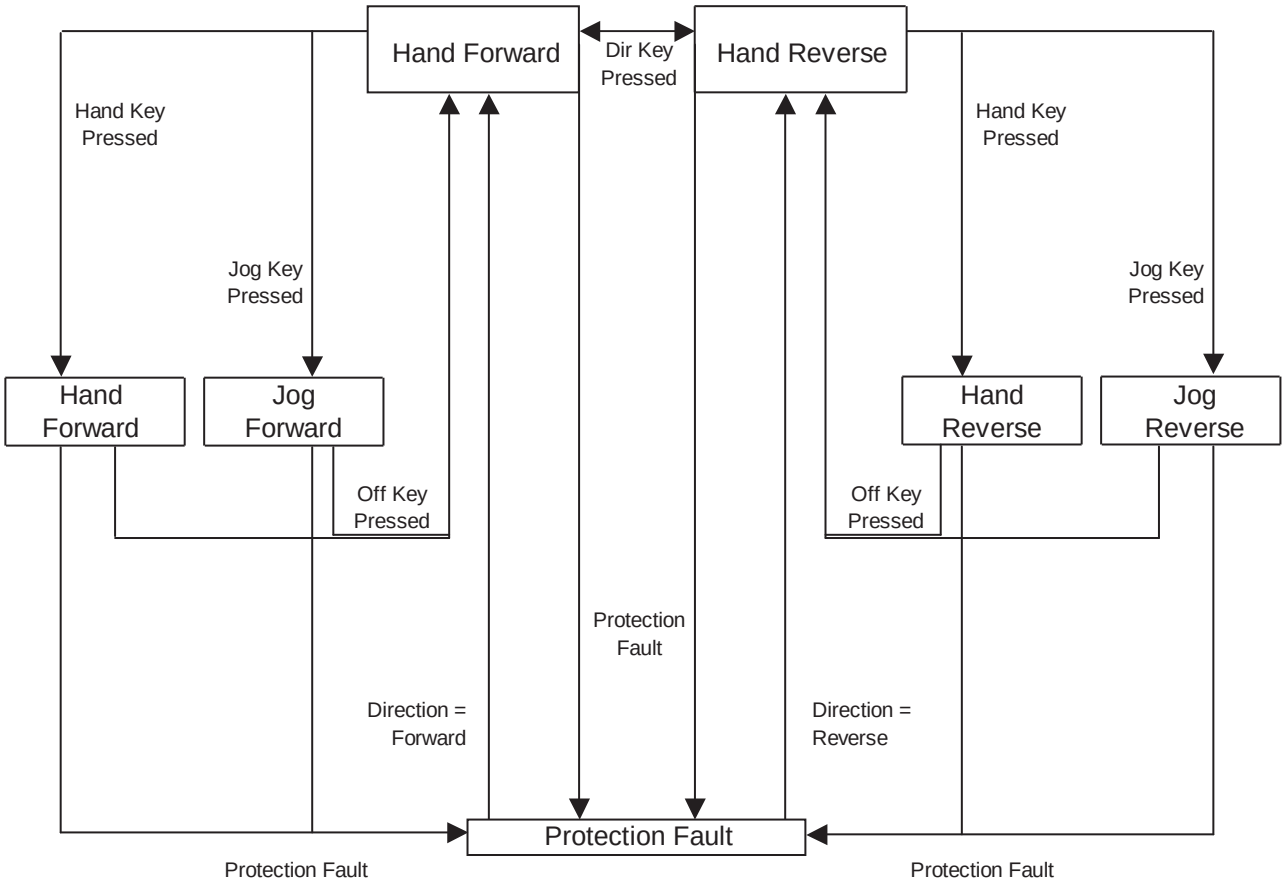

The following State Transition Diagram is used in Hand State for Bound or Unbound DOPs 1, 2, 9, and 10 with Parameter 45 Keypad Mode set to 1 = maintained:

Figure 88 - State Transition Diagram

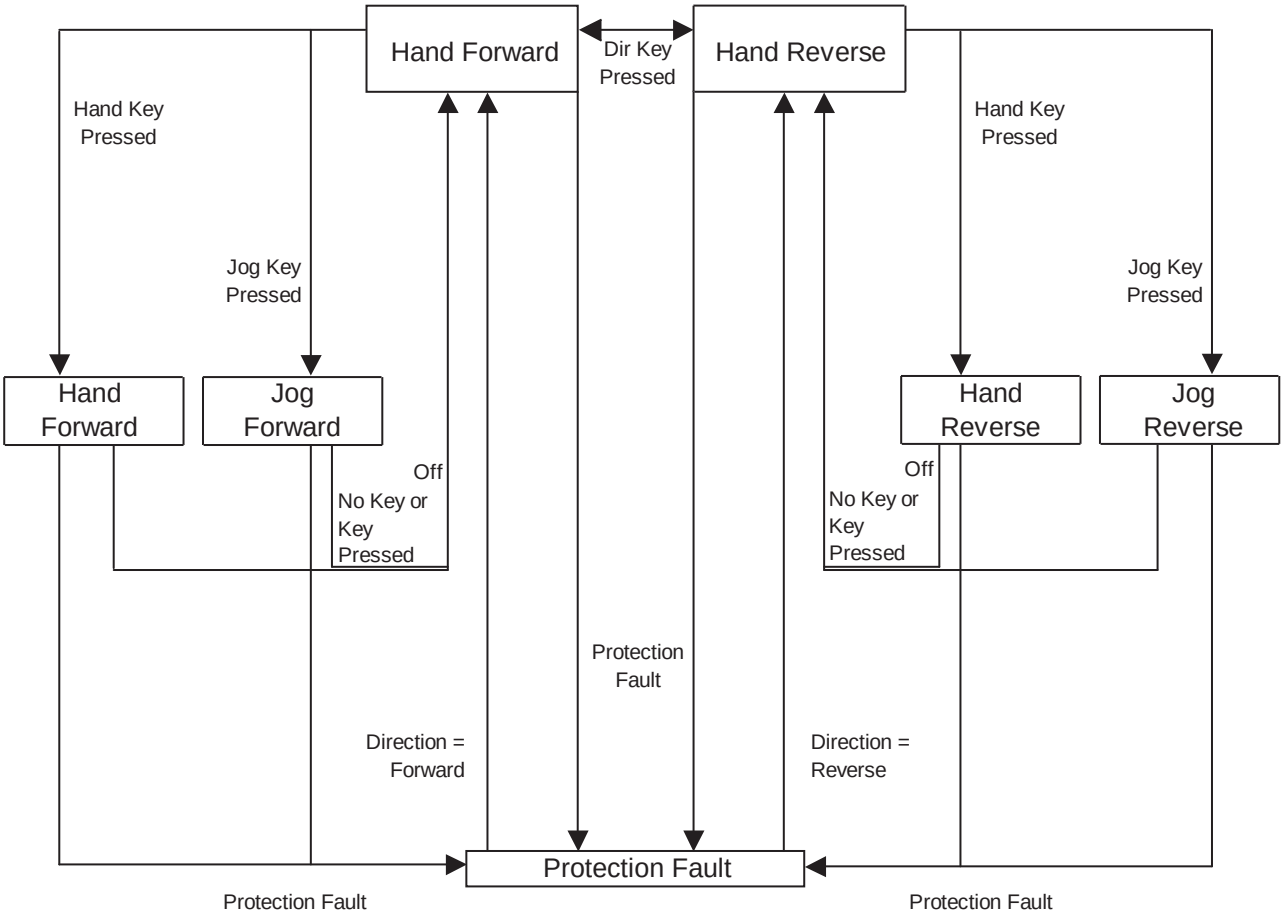

Parameter Object — CLASS CODE 0x000F

The following class attributes are supported for the Parameter Object:

Table 153 - Parameter Object Class Attributes:

Attribute ID	Access Rule	Name	Data Type
1	Get	Revision	UINT
2	Get	Max Instance	UINT
8	Get	Parameter Class Descriptor	WORD
9	Get	Configuration Assembly Instance	UINT

The number of instances of the parameter object depends upon the type of distributed motor controller. There is a standard set of instances reserved (1...99) for all starters. These instances are followed by a unique set of instances for each starter type (Bulletin 280, 281, or 284).

The following instance attributes are implemented for all parameter attributes:

Table 154 - Parameter Object Instance Attributes:

Attribute ID	Access Rule	Name	Data Type
1	Get/Set	Value	Specified in Descriptor
2	Get	Link Path Size	USINT
3	Get	Link Path	Array of: • BYTE • EPATH
4	Get	Descriptor	WORD
5	Get	Data Type	EPATH
6	Get	Data Size	USINT
7	Get	Parameter Name String	SHORT_STRING
8	Get	Units String	SHORT_STRING
9	Get	Help String	SHORT_STRING
10	Get	Minimum Value	Specified in Descriptor
11	Get	Maximum Value	Specified in Descriptor
12	Get	Default Value	Specified in Descriptor
13	Get	Scaling Multiplier	UINT
14	Get	Scaling Divisor	UINT
15	Get	Scaling Base	UINT
16	Get	Scaling Offset	INT
17	Get	Multiplier Link	UINT
18	Get	Divisor Link	UINT
19	Get	Base Link	UINT
20	Get	Offset Link	UINT
21	Get	Decimal Precision	USINT

The following common services are implemented for the Parameter Object:

Table 155 - Parameter Object Common Services:

Service Code	Implemented for		Service Name
	Class	Instance	
0x0E	Yes	Yes	Get_Attribute_Single
0x10	No	Yes	Set_Attribute_Single
0x01	No	Yes	Get_Attributes_All

Parameter Group Object — CLASS CODE 0x0010

The following class attributes are supported for the Parameter Object:

Table 156 - Parameter Group Object Class Attributes:

Attribute ID	Access Rule	Name	Data Type
1	Get	Revision	UINT
2	Get	Max Instance	UINT

All Bulletin 284 Motor Starters have the following instances of the parameter group object:

- Instance 1 = DeviceLogix Parameters
- Instance 2 = DeviceNet Parameters
- Instance 3 = Starter Protection Parameters
- Instance 4 = User I/O Parameters
- Instance 5 = Miscellaneous
- Instance 6 = Drive DNet
- Instance 7 = ZIP Parameters
- Instance 8 = Basic Display
- Instance 9 = Basic Program
- Instance 10 = Advanced Program

The following instance attributes are supported for all parameter group instances:

Table 157 - Parameter Group Object Instance Attributes:

Attribute ID	Access Rule	Name	Data Type
1	Get	Group Name String	SHORT_STRING
2	Get	Number of Members	UINT
3	Get	First Parameter	UINT
4	Get	Second Parameter	UINT
N	Get	Nth Parameter	UINT

The following common services are implemented for the Parameter Group Object

Table 158 - Parameter Group Object Service Common Services:

Service Code	Implemented for		Service Name
	Class	Instance	
0x0E	Yes	Yes	Get_Attribute_Single

Discrete Input Group Object — CLASS CODE 0x001D

No class attributes are supported for the Discrete Input Group Object.

A single instance of the Discrete Input Group Object is supported. It contains the following attributes:

Table 159 - Discrete Input Instance Attributes:

Attribute ID	Access Rule	Name	Data Type	Value
3	Get	Number of Instances	USINT	4
4	Get	Binding	Array of UINT	List of DIP instances
6	Get/Set	Off_On_Delay	UINT	in usec
7	Get/Set	On_Off_Delay	UINT	In usec

The following common services are implemented for the Discrete Input Group Object:

Table 160 - Discrete Input Group Object Common Services:

Service Code	Implemented for		Service Name
	Class	Instance	
0x0E	No	Yes	Get_Attribute_Single
0x10	No	Yes	Set_Attribute_Single

Discrete Output Group Object — CLASS CODE 0x001E

No class attributes are supported for the Discrete Output Group Object.

Two instances of the Discrete Output Group Object are supported. They contain the following attributes:

Table 161 - Discrete Output Group Instance 1Attributes

Attribute ID	Access Rule	Name	Data Type	Value
3	Get	Number of Instances	USINT	10
4	Get	Binding	Array of UINT	List of DOP instances; 1, 2, 3, 4, 5, 6, 7, 8, 9, 10
6	Get/Set	Command	BOOL	0 = idle; 1 = run
104	Get/Set	Network Status Override	BOOL	0 = No Override (go to safe state) 1 = Override (run local logic)
105	Get/Set	Comm Status Override	BOOL	0 = No override (go to safe state) 1 = Override (run local logic)

Table 162 - Discrete Output Group Instance 2 Attributes

Attribute ID	Access Rule	Name	Data Type	Value
3	Get	Number of Instances	USINT	4
4	Get	Binding	Array of UINT	5, 6, 7, 8
7	Get/Set	Fault Action	BOOL	0 = Fault Value Attribute, 1 = Hold Last State
8	Get/Set	Fault Value	BOOL	0 = OFF, 1 = ON
9	Get/Set	Idle Action	BOOL	0 = Idle Value Attribute, 1 = Hold Last State
10	Get/Set	Idle Value	BOOL	0 = OFF, 1 = ON
113	Get/Set	Pr Fault Action	BOOL	0 = Pr Fault Value Attribute, 1 = Ignore
114	Get/Set	Pr Fault Value	BOOL	0 = OFF, 1 = ON

The following common services are implemented for the Discrete Output Group Object:

Table 163 - Discrete Output Group Common Services:

Service Code	Implemented for		Service Name
	Class	Instance	
0x0E	No	Yes	Get_Attribute_Single
0x10	No	Yes	Set_Attribute_Single

Control Supervisor Object — CLASS CODE 0x0029

No class attributes are supported. A single instance (instance 1) of the Control Supervisor Object is supported.

Table 164 - Instance 1 — Control Supervisor Object

Attribute ID	Access Rule	Name	Data Type	Value
3	Get/Set	Run FWD	BOOL	These Run outputs also map to DOP instances 1 and 2.
4	Get/Set	Run REV	BOOL	
7	Get	Running FWD	BOOL	—
8	Get	Running REV	BOOL	—
9	Get	Ready	BOOL	—
10	Get	Tripped	BOOL	—
12	Get/Set	Fault Reset	BOOL	0->1 = Trip Reset
100	Get/Set	Keypad Mode	BOOL	0=Maintained; 1=Momentary
101	Get/Set	Keypad Disable	BOOL	0=Not Disabled; 1=Disabled
115	Get	Warning Status	WORD	Bits 0-1 = Reserved Bit 2 = Reserved Bit 3 = Reserved Bit 4 = Reserved Bit 5 = CP Warning Bit 6 = IO Warning Bit 7 = Reserved Bit 8 = Reserved Bit 9 = DN Warning Bits 10-12 = Reserved Bit 13 = HW Warning Bit 14 = Reserved Bit 15 = DB Warning
124	Get/Set	Trip Enable	WORD	Bit enumerated trip enable word
130	Get/Set	Trip Reset Mode	BOOL	0=manual; 1=auto
131	Get/Set	Trip Reset Level	USINT	0 – 100%; default = 75
150	Get/Set	High Speed Ena	BOOL	0 = Disable; 1 = Enable
151	Get	Base Enclosure	WORD	Bit 0 = IP67 Bit 1 = NEMA 4x Bit 2 = PLe Cat 4 Bits 3-15 = Reserved
152	Get	Base Options	WORD	Bit 0 = Output Fuse Bit 1 = Safety Monitor Bit 2 = CP Fuse Detect Bits 3-7 = Reserved Bit 8 = 10A Base Bit 9 = 25A Base Bit 10-15 = Reserved
153	Get	Wiring Options	WORD	Bit 0 = Conduit Bit 1 = Round Media Bit 2 = 28xG Gland Bits 3-15 = Reserved

Attribute ID	Access Rule	Name	Data Type	Value
154	Get	Starter Enclosure	WORD	Bit 0 = IP67 Bit 1 = NEMA 4x Bit 2 = 28xG Ple Cat4 Bits 3-15 = Reserved
155	Get	Starter Options	WORD	Bit 0 = Full Keypad Bit 1 = Safety Monitor Bit 2 = Source Brake Bit 3 = CP Brake Bit 4 = Dynamic Brake Bit 5 = Output Contactor Bit 6 = EMI Filter Bit 7 = 0-10V Analog In Bit 8 = Fused Dyn Brake Bits 9-15 = Reserved
156	Get	Last PR Trip	UINT	
157	Get	DB Status	WORD	Bit 0 = DB Faulted Bit 1 = DB Overtemp Warning Bit 2 = DB On Bit 3 = DB Flt Reset Inhibit Bits 4-15 = Reserved
158	Get	DB Fault	WORD	Bit 0 = DB Overtemp Bit 1 = DB OverCurrent Bit 2 = DB UnderCurrent Bit 3 = DB Shorted Switch Bit 4 = DB Open Bit 5 = Reserved Bit 6 = DB Bus Voltage Link Open Bit 7 = Reserved Bit 8 = DB Comms Bits 9-15 = Reserved

The following common services are implemented for the Control Supervisor Object:

Table 165 - Control Supervisor Object Common Services:

Service Code	Implemented for		Service Name
	Class	Instance	
0x0E	No	Yes	Get_Attribute_Single
0x10	No	Yes	Set_Attribute_Single

Acknowledge Handler Object — CLASS CODE 0x002b

No class attributes are supported for the Acknowledge Handler Object.

A single instance (Instance 1) of the Acknowledge Handler Object is supported. The following instance attributes are supported:

Table 166 - Acknowledge Handler Instance Attributes:

Attribute ID	Access Rule	Name	Data Type	Value
1	Get/Set	Acknowledge Timer	UINT	milliseconds
2	Get	Retry Limit	USINT	1
3	Get	COS Producing Connection Instance	UINT	4

The following common services are implemented for the Acknowledge Handler Object:

Table 167 - Acknowledge Handler Common Services:

Service Code	Implemented for		Service Name
	Class	Instance	
0x0E	No	Yes	Get_Attribute_Single
0x10	No	Yes	Set_Attribute_Single

DeviceNet Interface Object — CLASS CODE 0x00B4

This vendor specific object has no class attributes.

A single instance (Instance 1) of the DeviceNet Interface Object is supported.

Table 168 - DeviceNet Interface Object Instance Attribute:

Attribute ID	Access Rule	Name	Data Type	Min./Max.	Default	Description
7	Get/Set	Prod Assy Word 0	USINT	—	1	Defines Word 0 of Assy 120
8	Get/Set	Prod Assy Word 1	USINT	—	5	Defines Word 1 of Assy 120
9	Get/Set	Prod Assy Word 2	USINT	—	6	Defines Word 2 of Assy 120
10	Get/Set	Prod Assy Word 3	USINT	—	7	Defines Word 3 of Assy 120
13	Get/Set	Starter COS Mask	WORD	0 — 0xFFFF	0xFFFF	Change of state mask for starter bits
15	Get/Set	Autobaud Enable	BOOL	0 — 1	1	1 = enabled; 0 = disabled
16	Get/Set	Consumed Assy	USINT	0…185	160 (drive 164)	3, 160, 162, 164, 166, 170, 182, 187, 188
17	Get/Set	Produced Assy	USINT	100…187	161 (drive 165)	52, 120, 161, 163, 165, 167, 171, 181…190
19	Get/Set	Set To Defaults	BOOL	0…1	0	0 = No action; 1 = Reset
23	Get	I/O Produced Size	—	0…8	—	—
24	Get	I/O Consumed Size	USINT	0…8	—	—
30	Get	DNet Voltage	UINT	—	—	DeviceNet Voltage
50	Get/Set	PNB COS Mask	WORD	0…0x00FF	0	Change of state mask for PNBs
64	Get/Set	Unlock Identity Instances	USINT	—	0	Unlock when set to 99 hex

The following common services are implemented for the DeviceNet Interface Object:

Table 169 - DeviceNet Interface Object Common Services:

Service Code	Implemented for		Service Name
	Class	Instance	
0x0E	No	Yes	Get_Attribute_Single
0x10	No	Yes	Set_Attribute_Single

Group Motor Installations

Application of ArmorStart Controllers in Group Installation

The following is a method of applying ArmorStart controllers using group motor installation rules as defined in the National Electric Code (NEC 2005) and Electrical Standard for Industrial Machinery (NFPA 79-2002).

1. List motors of the group in descending order of motor nameplate full load current.
2. Select disconnect means.
   a. Sum all locked rotor currents of motors that can be started simultaneously using NEC Table 430.251.
   b. Add to that value all the full load currents of any other motors or loads that can be operating at the same time as the motors that start simultaneously, using NEC Table 430.250.
   c. Use the total current from a and b above to get an equivalent horsepower value from Table 430.251. That value is the size of the disconnect means in horsepower. (NEC 430.110)
3. Select fuse or circuit breaker protection: Select fuse or circuit breaker size for the largest motor per NEC Table 430.52 and add that ampere value to the total of the full load currents of the rest of the motors. The final value is the fuse or circuit breaker size required. (NEC 430.53C)
4. Select wire: Ampacity of wire feeding a group of motors is not less than 125% of the full-load current rating of the highest rated motor plus the sum of the full load current ratings of all the motors in the group. (NEC 430.24)
5. The code states that any taps supplying a single motor shall have an ampacity not less than one third the ampacity of the branch circuit conductors. (NEC 430.53D) The branch circuit conductors can be defined as the conductors on the load side of the fuse block or circuit breaker. This requirement actually defines the size of the group of motors. For example, if the wire from the fuses or circuit breaker is AWG #8 with rated ampacity of 50 A, the smallest wire you can use as a tap and to the motors is AWG #14 with an ampacity of 20 A. (NEC Table 310.16 for 75 °C wire) Note that the Bulletin 280, 281ArmorStart controllers do not accept wire greater than #10 wires at its input terminal blocks. The ArmorStart cabling to the motor is UL Listed for the controller's horsepower and is supplied with the ArmorStart controller or as an accessory when longer lengths are required.

Group motor installations using the ArmorStart in distributed control applications are largely dictated by the required motor horsepower, their locations and the practical concerns of wire-cable routing on the equipment. It should be noted that Group motor installation are designed to use the actual motor horsepower and current ratings in NEC Table 430.250 and not the ArmorStart controller's rating. This allows for the possible standardization of ArmorStart controllers in an installation. An application can be designed using 5 Hp controllers for all motors between say 5 and 2 Hp and 1 Hp controllers for motors 1 Hp and less without having to oversize the wiring and short circuit protection that would result from using the larger ArmorStart controller's rating.

In the case of using the Bulletin 284 VFD-ArmorStart the actual full-load current of the motor needs to multiplied by the ratio of the drive's ratio of rated input current to output current to arrive at the actual full-load current. For example, in the case of a 2 Hp VFD-ArmorStart being used to control a 1 Hp, 2.1 A @ 460 V motor, the full-load amperes to be used for the Group motor calculation would be the 2 Hp VFD-ArmorStart's (Rated Input Current / Rated Output Current) x 1 Hp motor's rated full-load current; (5.7 A / 4.0 A)2.1 A = 3.0 A.

The following is a group motor example calculation for a 460V distributed application that requires two 10 Hp DOL-ArmorStart controlling 10 Hp and 5 Hp motors and four 2 Hp VFD-ArmorStarts controlling one 2 Hp motor and three 1 Hp motors. From NEC Table 430.250 the full-load current of the respective motors are:

Motor Hp	Motor FLC [A]
10	14
5	7.6
2	3.4
1	2.1
1	2.1
1	2.1

To design the motor circuit using a time delay fuse from NEC Table 430.52 to the rules of NEC 430.53C we start with the largest motor, 10 Hp, and calculate 14 A x 175% = 24.5 A. To this we add the FLC of the 5 Hp motor, 7.6 A, plus the other calculated drive currents for the motors controlled by the VFD-ArmorStarts. The calculated drive currents are given in the following table:

Motor Hp	Motor FLC [A]	Drive Input to Output Current Ratio (See ArmorStart Users Manual - Appendix A)	Calculated Drive Current
2	3.4	5.57 A/4.0 A = 1.39	3.4 x 1.39 = 4.72 A
1	2.1	3.45 A/2.3 A = 1.5	2.1 x 1.5 = 3.15 A
1	2.1	3.45 A/2.3 A = 1.5	2.1 x 1.5 = 3.15 A
1	2.1	3.45 A/2.3 A = 1.5	2.1 x 1.5 = 3.15 A

The total current for the fuse ampacity is calculated in the following table:

Motor Hp	Motor FLC [A]	TD Fuse Current [A]
10	14	24.5
5	7.6	7.6
2	3.4	4.72
1	2.1	3.15
1	2.1	3.15
1	2.1	3.15
Total Fuse Current		46.4

Therefore the standard fuse available not exceeding 46.4 A is a 40 A fuse.

To calculate the wire ampacity and therefore the size of the motor branch conductor we use NEC 430.24 and calculate the sum of 125% of the largest motor's FLC plus the FLC of the other motors in the group. The conductor ampacity calculation is given in the following table:

Motor Hp	Motor FLC [A]	Wire Current [A]
10	14	14 A x 1.25 =17.5
5	7.6	7.6
2	3.4	4.89
1	2.1	3.15
1	2.1	3.15
1	2.1	3.15
Total Fuse Current		39.4

From NEC Table 310.16, 8 AWG is used for the motor branch circuit. Per NEC 430.28 the individual motor tap conductors can be sized down to one third of the ampacity of the trunk but not less than 125% of the specific motor's FLC on the tap. This reduction is further conditionally based on the tap being not more than 25 ft. NFPA 79, 7.2.10.4 and Table 7.2.10.4 restrict the size reduction by the size of the branch circuit fuse size and tap conductor size. For the above case, a 40 A time-delay fuse was used. NFPA 79, Table 7.2.10.4 indicates that the smallest tap conductor can be 12 AWG. NEC Table 310.16 for wire ampacity allows 12 AWG (25 A) to be used in all taps for this application.

See the final group motor circuit design in the following figure:

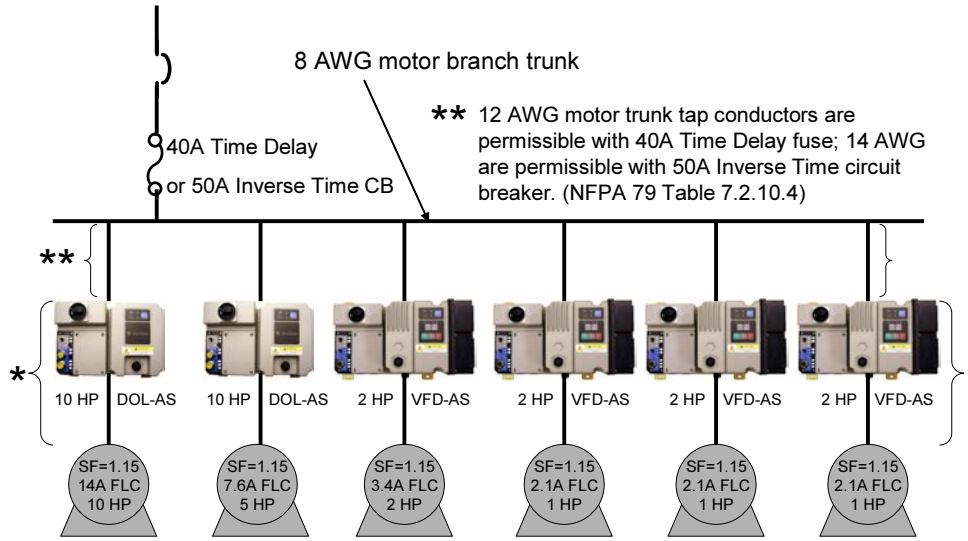

* Note, the ArmorStart and motor cable are UL Listed together and supplied by Rockwell Automation.

If the group motor design was carried out with the intent to use an inverse-time circuit breaker from NEC Table 430.52 to the rules of NEC 430.53C, start with the largest motor, 10 Hp, and calculate 14 A x 250% = 35 A, to this add the FLC of the 5 Hp motor, 7.6 A, plus the other calculated drive currents for the motors controlled by the VFD-ArmorStarts. The calculated drive currents are given in the following table:

Motor Hp	Motor FLC [A]	Inverse-Time CB Current [A]
10	14	35
5	7.6	7.6
2	3.4	4.89
1	2.1	3.15
1	2.1	3.15
1	2.1	3.15
Total Fuse Current		56.94

Therefore for the standard inverse-time circuit breaker available not exceeding 56.94 A, a 50 A inverse-time circuit breaker is used. This design also allows the use of 8 AWG for the motor branch circuit. Continuing and applying NEC 430.28, the individual motor tap conductors can be sized down to one third of the ampacity of the trunk. Then following the restrictions in NFPA 79, 7.2.10.4 and Table 7.2.10.4 for this case where a 50 A inverse-time circuit breaker is used, the smallest tap conductor can now be 14 AWG. See the above figure for this Group motor circuit design.

The above method instructs a person on applying ArmorStart controllers using group motor installation rules. Because of the ArmorStart's capability, rating, and listing, this method provides the minimum branch circuit wire and SCPD protection size that can be used. The Armor Start has been evaluated and tested for group motor installations when being fed by a power source having a fault current of 65,000 A available. The ArmorStart is not a listed combination motor controller, but it is listed as Industrial Control Equipment per UL 508 for group motor installations per NFPA 79. Under this listing the NEC and NFPA 79 puts an upper bound on the SCPD to be used. That upper bound is dictated by the maximum ratings in Table 7.2.10.4.

The rules and allowances for sizing of the over current protection for NFPA 79 motor groups is covered by 7.2.10.4, Table 7.2.10.4 and Table 13.5.6. These rules in Tables 7.2.10.4 and 13.5.6 are intended to limit the maximum SCPD for a group. Therefore each ArmorStart controller with its factory-supplied output motor cable is suitable for single-motor or multiple-motor group installations on industrial machinery when installed according to NFPA 79, 2002. The controller and output motor cable have been evaluated as a single system. The maximum over current device rating or setting is limited to the value in Table 170 - for the smallest user-supplied input line conductor, by the controller's maximum rating, or as allowed by the UL Certificate of Compliances 012607-E3125, E96956, and E207834 for the combined use of ArmorStart and ArmorConnect components.

The Certificate of Compliances allow the ArmorStart distributed motor controllers Models 280*-*10*, 281*-*10*, and 284*-*10* respectively to be used with ArmorConnect input cable media 280*-PWRM22*-M*, 280S-PWRM22*-M* Cable Assembly branch circuit taps, and 280*-M22*-M1 ArmorConnet Panel Mounting Fittings when the group motor branch circuits are protected with a maximum 40 A non-time delay or a 20 A time delay, Class CC, T or F fuse.

These ArmorStart and ArmorConnect product UL Certification of Compliances effectively extend Table 170 - to allow ArmorConnect branch circuit taps and mounting fittings constructed with 16 AWG conductor sized to be connected to appropriate ArmorStart motor controllers. See Table 170 -.

Table 170 - Extended NFPA 79, Table 7.210.4, Relationship Between Conductor Size and Maximum Rating or Setting of Short-Circuit Protective Devices for Power Circuits

	Maximum Ratings	
Conductor Size [AWG]	Non-Time Delay Fuse or Inverse Time Circuit Breaker ❶ [A]	Time Delay or Dual Element Fuse [A]
16 ❷	40 ❸	20 ❹
14	60	30
12	80	40
10	100	50
8	150	80
6	200	100
4	250	125

❶ For 16 AWG conductors the branch circuit breaker must be marked for use the 16 AWG wire, NFPA 79, 12.6.1.1.
❷ The UL Certificate of Compliance for the ArmorStart distributed motor controllers models 280*-*10*, 281*-*10*, 284*-*10*; and ArmorConnect input cable media 280*-M22*-M*, 280S-PWRM22*-M* cable assembly branch circuit taps, and 280*-M22*-M1 ArmorConnect panel mounting fittings allows 16 AWG conductors to be used when part of ArmorStart and ArmorConnect components.
❸ The 280*-PWRM22*-M* ArmorConnect cable assembly taps and 280*-22*-M1 panel mounted fittings with 16 AWG conductors are suitably protected when protected in the branch circuit by a 40 A non-time delay fuse.
❹ The 280*-PWRM22*-M* ArmorConnect Cable Assembly taps and 280*-22*-M1 Panel Mounted Fittings with 16 AWG conductors are suitably protected when protected in the branch circuit by a 20 A time delay fuse.

The listed ArmorStart motor controllers with their factory supplied motor cable carries the marked maximum ratings shown in the following table.

Max. Ratings				
Voltage	480Y/277	480	600Y/347	600
Sym. Amps RMS	65 kA	65 kA	30 kA	30 kA
Circuit Breaker	100 A	100 A	100 A	-
Fuse	100 A	100 A	100 A	60 A ❶
ArmorConnect ❷	60 A ❶	60 A ❶	60 A ❶	60 A ❶

❶ Class J, CC, and T fuses only.
❷ ArmorConnect power media and tees may only be used with fuses.

Summary

The design of the ArmorStart controllers in group motor applications is to be carried out as described above. The user-supplied line side SCPD and wiring has to meet the minimum requirements determined above, however, the SCPD is required to only protect the ArmorStart controller's associated line side wiring and can be increased to the values allowed in the maximum ratings tables above. Because the maximum line side conductor for the ArmorStart is 10 AWG, this is the maximum tap wire or daisy-chain wiring that can be used to take advantage of the ArmorStart's maximum input ratings.

A benefit to the ArmorStart rating and the above design process using NFPA rules is that the industrial equipment that uses several group motor installations on different branch circuits can standardize the size of the SCPD and the branch wiring for all the branch circuits of the installation provided they do not exceed the maximum ratings of Table 170 -, as extended by the UL Certificate of Compliances for combined ArmorStart and ArmorConnect installations, whichever is less.

24V DC Control Design Considerations

ArmorStart DC Control Voltage Application Information

The maximum distance that an ArmorStart can be located from a nominal 24V DC supply is determined by the inrush current requirements of the ArmorStart distributed motor controllers. The following table gives the maximum distance from the power source that a single ArmorStart can be placed.

Table 171 - Wire Gauge Sizes

Wire Gauge	mm^2	Meters	Feet
#16	1.31	38	125
#14	2.08	62	205
#12	3.31	100	325
#10	5.26	158	520

In systems with multiple ArmorStarts where more than one unit will be commanded to start at the same time, provisions must be made to account for maximum inrush current (710 mA for 100 msec, for each unit). The DC power supply and distribution system needs to be of sufficient capacity and the wire gauge of sufficient size to handle the maximum current required. The total capacity of the system also includes any additional loads connected to the ArmorStart I/O outputs (max. 2 A for each ArmorStart).

The maximum distance can still be used if each of the ArmorStarts that will be commanded to start simultaneously is wired directly back to the DC power supply, or if a 100ms delay between consecutive starts can be insured. When more than one ArmorStart is commanded to pick up at the same time, the length of each wire segment in the system should be multiplied by the number of units that can simultaneously pick up through that section of wire. This calculation represents the equivalent starting distance. The sum of the equivalent starting distances should be less than the maximum distance allowed for the selected gauge.

Example 1 – Conveyor Line Configuration

Five sections of Conveyor are to be wired up (See Figure 89 -). Each section of conveyor has a conveyor motor and a diverter motor. Assume that they are 50 feet apart. The conveyor motors may be started in sequence, but it is possible that all five of the diverter motors could start simultaneously. All controllers are Bulletin 280 ArmorStart units with the HOA keypad. **Assume that the conveyor motors are sequenced on and are running before the diverters start.**

Figure 89 -

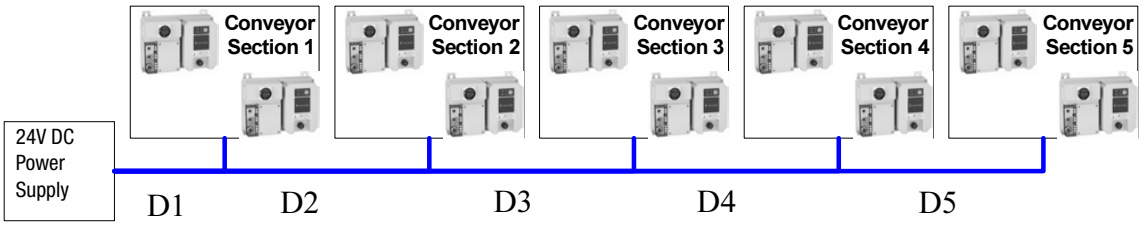

Calculate the effective wire lengths.

	Distance 1	Distance 2	Distance 3	Distance 4	Distance 5	Equivalent Distance
Run 1	+ 15 m (50 ft) * 5	+ 15 m (50 ft) * 4	+ 15 m (50 ft) * 3	+ 15 m (50 ft) * 2	+ 15 m (50 ft) * 1	= 229 m (750 ft)

Based on this calculation, there is no wire gauge that can be taken 228.6 m (750 ft), so the fifth section is required to have its own run.

Example 1 re-calculated with section 5 having its own power feed:

	Distance 1	Distance 2	Distance 3	Distance 4	Distance 5	Equivalent Distance
Run 1	+ 15 m (50 ft) * 4	+ 15 m (50 ft) * 3	+ 15 m (50 ft) * 2	+ 15 m (50 ft)	—	= 152 m (500 ft)
Run 2	+ 15 m (50 ft)	+ 15 m (50 ft)	+ 15 m (50 ft)	+ 15 m (50 ft)	+ 15 m (50 ft)	= 76 m (250 ft)

Therefore, Run 1 needs to be 10 AWG, while Run 2 can be either 12 AWG or 10 AWG.

Figure 90 - Two-Run Wiring Solution

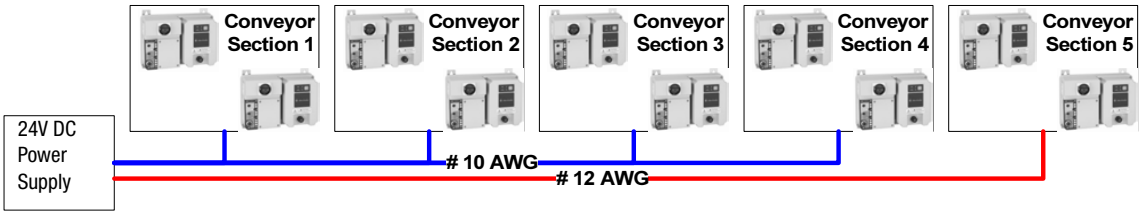

Example 2

Centrally locate the power supply in Example 1 – Conveyor Line Configuration.

Figure 91 - Centrally Located Power Supply Distribution

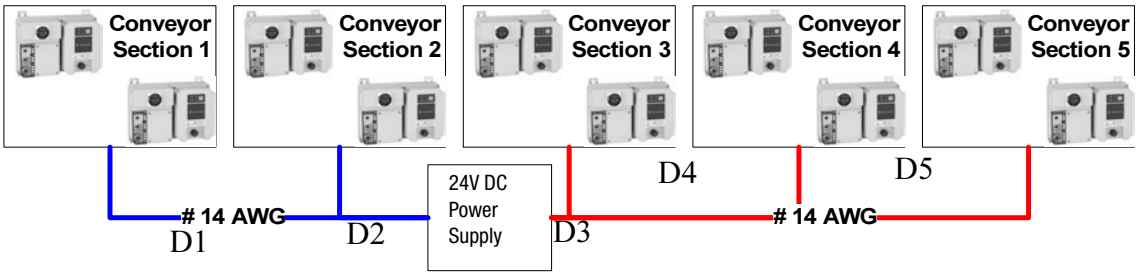

	Distance 1	Distance 2	Distance 3	Distance 4	Distance 5	Equivalent Distance
Run 1	+ 15 m (50 ft)	+ 15 m (50 ft) * 2	—	—	—	46 m (150 ft)
Run 2	—	—	+ 0 m (0 ft) * 3	+ 15 m (50 ft) * 2	+ 15 m (50 ft)	46 m (150 ft)

Therefore, both runs can be 14 AWG. The controllers on section three are considered to have no length since the power supply is very close to the units.

24V DC Power Supply Capacity Sizing

The 24V DC power supply current rating required for an ArmorStart system can be calculated by the following formula:

I supply = N*.25A + K*3A + J*.3A + L*.425A + M

N =	No. of 280, 281 ArmorStart units with the HOA
K =	No. of ArmorStart (280,281) that will be commanded start simultaneously, K = 1 minimum
J =	No. of ArmorStart (280,281) that will be commanded to hold in at any time
L =	No. of 284 ArmorStart Units
M =	Current drawn by customer loads

Example – Calculation of 24V DC Power Supply Requirements

Size the power supply for Example 1 – Conveyor Line Configuration. Each starter has a 0.1 A customer load.

I supply = 10*.17 +5*.710 + 5*.063 + 0*.425 + 10*.1

I supply = 1.7+ 3.55 + .315 + 0 + 1 = 6.57 A

System Design Considerations When Using 16 AWG Control Wiring

The use of 16 AWG requires more consideration when determining the number and location of the power supplies since it is effectively limited to 38.1 m (125 ft). Re-working example 1 using 16 AWG, shows that two power supplies are required.

Figure 92 -

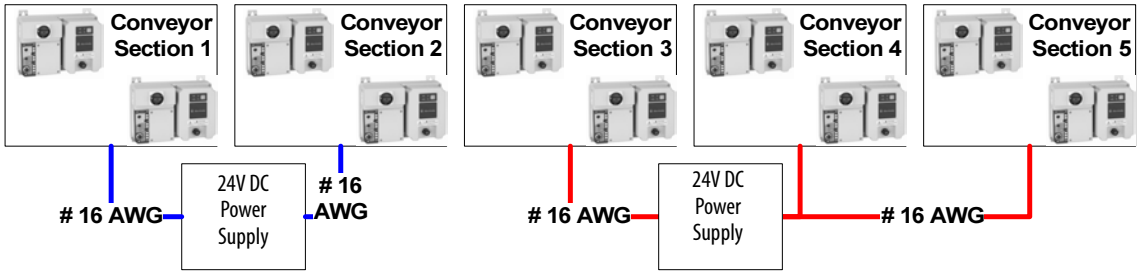

	Distance 1	Distance 2	Distance 3	Distance 4	Distance 5	Wire Length
Run 1	7.6 m (25 ft)	—	—	—	—	= 7.6 m (25 ft)
Run 2	—	7.6 m (25 ft)	—	—	—	= 7.6 m (25 ft)
Run 3	—	—	15 m (50 ft)	—	—	= 15 m (50 ft)
Run 4	—	—	—	0 m (0 ft) * 2	+15 m (50 ft)	= 15 m (50 ft)

Other System Design Considerations

To minimize the DC power ampacity requirements staggering the starting (sequenced on) of the ArmorStarts is recommended, but only if the application does not require all the ArmorStarts to be commanded to start at the same time.

The separation of the control power and DeviceNet power is recommended as a good design practice. This minimizes the load on the DeviceNet supply, and prevents transients which may be present on the control power system from influencing the communication controls.

System Design Considerations When Using a Line Reactor

General Rule

Generally a line reactor for an ArmorStart controller is not required. Customers familiar with Rockwell Automation PowerFlex drives may ask this when installing an ArmorStart controller.

Reasons to Use

The most common reason's to use a line reactor are to:

- Extend the working life of the DC- bus capacitors by reducing the associated heating impact that is caused by ripple noise currents in these capacitors.
- Reduce the impact of line disturbances on other equipment that result VFD input switching.
- Reduce the RMS input current that is associated with peak changes in current that results from VFD input switching, allowing the use of smaller input conductors and transformers.
- Mitigate the impact of power system transients on the drive.

Repeated line disturbances in current and voltage can lead to premature input power structure failure for AC drives. One way to mitigate these types of issues is to add impedance to the incoming power line to the drive. Impedance comes in the form of transformers, line reactors, and conductors. When a large power distribution system (>100 kVA) is feeding many small VFDs, the associated input impedance can be lower than 1%. This low impedance can result in voltage and current disturbances that negatively impact performance and the overall life of an AC drive. A line reactor is one possible solution to absorb these power line disturbances. This does not mean that a reactor must be used in every situation. Conductors add impedance. On Machine solutions are generally further away from the power distribution panel therefore the length of cable adds impedance.

ArmorStart Design

The ArmorStart design incorporates features and additional components that allow for better heat transfer keeping the internal components cooler. This cooler design assures longer life of the DC bus capacitors that extend the life of the VFD. In addition, if line disturbance mitigation is necessary, the ArmorStart can be equipped with an EMI filter and shielded motor cable reducing the impact of the power switching components. However, if users specify input line reactors or transformers the recommendation is to group the ArmorStarts at the distribution panel under one line reactor (not individual reactors or transformers).

Lastly, when full voltage ArmorStarts controllers are included with VFD ArmorStart controllers, and line reactors are used, the starting currents of the full voltage ArmorStart controllers can be significant. The current must be accounted for in the selection of the line reactor or there is a risk of nuisance faults.

Examples

Reporting Examples

How to Report the RPM of the 284 Internal Fan

In order to get the RPM of the fan an explicit "get single" message instruction is needed using a service of 0x000E.

The fan RPM can be read using the following CIA Class 0x00B4, Instance 1, and Attribute 103. The nominal fan rpm value is 2800...3000 RPM. The ArmorStart trips once the fan speed falls below 62% (1736).

There is no FAN FAULT warning. The user needs to develop their own warning PLC code using the step listed above, for critical applications.

How to report the Heat Sink Temperature of the 284

In order to get the heat sink temperature of the 284 an explicit "get single" message instruction is needed.

The heat sink temperature can be read using the following CIA Class 0x000F, Instance 124, and Attribute 1.

Service: e (hex) Class: f (hex) Instance: 124 Attribute: 1 (hex)

Application Examples

284 - VFD Preset Speed Example

DeviceLogix can be used to select one of multiple preset frequencies cooperatively with the PLC or independently based on user input. This can be done using the four digit inputs or the frequency control bits in DeviceLogix. The digital inputs provide the user the most flexibility but can be more complex to configure. If a preset speed is needed the simpler approach is using frequency control found in the produced network bits of DeviceLogix. If you prefer not to apply DeviceLogix for preset speeds then implement the digit inputs to select preset speed via Instance 166 found in Chapter 5. The following example demonstrates the use of frequency control bits in DeviceLogix.

Frequency control (Freq Cntl) bits allow a maximum of four Preset Speeds. If more are required then digital inputs must be configured and properly used. The example focuses on Frequency Control 2,1,0 in Table 172. Note that there are other capabilities shown in the table that are not reviewed in this example.

Figure 93 shows all of the available network outputs supported by the 284. See Table 172 for the preset frequencies defined in parameters 170, 171, 172, and 173 of the 284. Also note the truth table that selects each of those frequencies. For example, if Freq Cntl bit 2=1, 1=1, and 0=0, then the controller frequency is based on Parameter 172 (Preset Freq 2).

Figure 93 - 284E Produced Network Bits in DeviceLogix Output

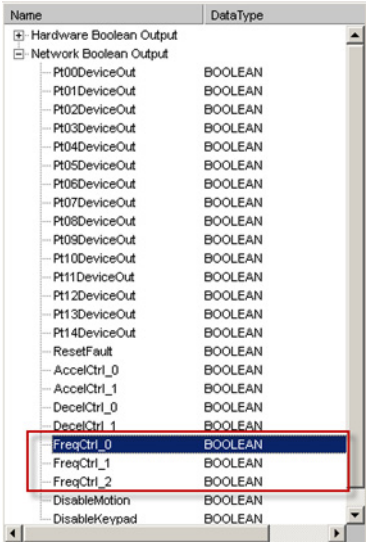

Table 172 - Parameters

Accel 2	Accel 1	—	Description
0	0	—	No Command
0	1	—	Accel 1 Enable
1	0	—	Accel 2 Enable
1	1	—	Hold Accel Rate Selected
Decel 2	**Decel 1**	—	—
0	0	—	No Command
0	1	—	Decel 1 Enable
1	0	—	Decel 2 Enable
1	1	—	Hold Decel Rate Selected
Freq Ctrl 2	**Freq Ctrl 1**	**Freq Ctrl 0**	—
0	0	0	No Command
0	0	1	Freq Source = P136 (Start Source)
0	1	0	Freq Source = P169 (Internal Freq)
0	1	1	Freq Source = Comms
1	0	0	**P170 (Preset Freq 0)**
1	0	1	**P171 (Preset Freq 1)**
1	1	0	**P172 (Preset Freq 2)**
1	1	1	**P173 (Preset Freq 3)**

1. Using parameters 170-173, set them to 0, 10, 30, and 60 respectively. Figure 94 below shows the preset frequencies 0-3.

Figure 94 - P170-173 Preset Frequency Settings

Group: <All Parameters>

ID	Name	Value
156	EM Brake Contactor Level	0
167	Accel Time 2	20.0
168	Decel Time 2	20.0
169	Internal Freq	60.0
170	Preset Freq 0	0.0
171	Preset Freq 1	10.0
172	Preset Freq 2	30.0
173	Preset Freq 3	60.0
174	Preset Freq 4	60.0
175	Preset Freq 5	40.0
176	Preset Freq 6	50.0
177	Preset Freq 7	60.0
178	Jog Frequency	10.0

The acceleration and deceleration is configured by parameter 167 and 168 (Accel Time 2 and Decel Time 2). Only Accel Time 2 and Decel Time 2 are valid when using Freq Ctrl 0, 1, 2.

167	Accel Time 2	5.0
168	Decel Time 2	5.0

In this example, DeviceLogix receives data from the PLC program. The communication and network overrides are disabled as shown below.

7	Starter Command	
8	Network Override	Disabled
9	Comm Override	Disabled

Figure 95 shows the DeviceLogix program. This allows the user to select one of three predefined frequencies based on two network bits.

Figure 95 - Select Frequency

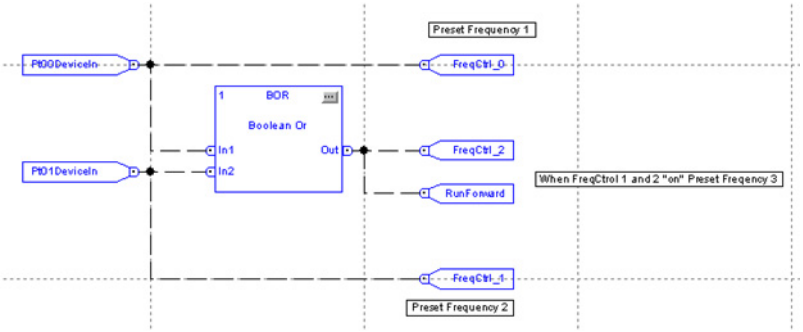

2. Once you exit the DeviceLogix editor verify that the logic is “Enabled” otherwise the preset frequency control does not operate.

This simple PLC program is used to select one of three preset speeds, speed 1, 2, or 3. For the purpose of this example speed 1, 2, & 3 are BOOL bits, but they can be any valid input. Notice that there is an interlock for speed 1 and speed 2 to verify they do not trigger at the same time, which would accidently cause speed 3 to run.

Operation

When bit Speed_1 is ON then the 284 accelerates to 10 Hz or decelerate using accel/decel Time 2

When bit Speed_2 is ON then the 284 accelerates to 30 Hz or decelerate using accel/decel Time 2

When bit Speed_3 is ON then the 284 accelerates to 60 Hz or decelerate using accel/decel Time 2

If bit Speed_1 and Speed_2 are ON the 284 does not accelerate or decelerates using decel Time 2

Speed_3 takes precedence over Speed_1 or Speed_2.

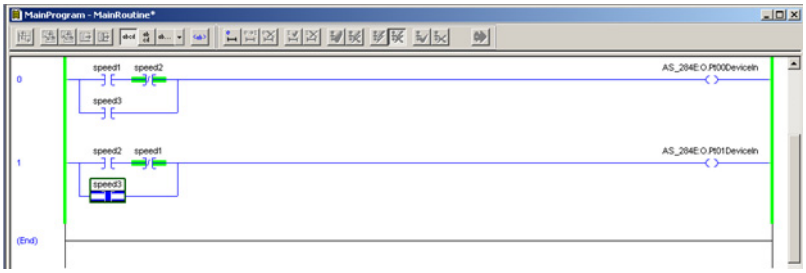

1. Download the finished program file to the PLC. In order for the parameters and DeviceLogix program to update in the device, ensure the PLC is in program mode.

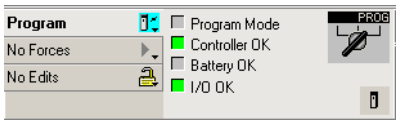

2. Place the PLC in run mode and test the program by exercising speed 1, 2, and 3 bits.

IMPORTANT To download a new DeviceLogix program, connect to the PLC and stay in program mode. There can be no active I/O connections to the device, or the download fails.

Retrieve the Fault Buffer

The ArmorStart display the last fault but keeps a record of the last four faults. The following example shows how to use an explicit message to get all four fault logs.

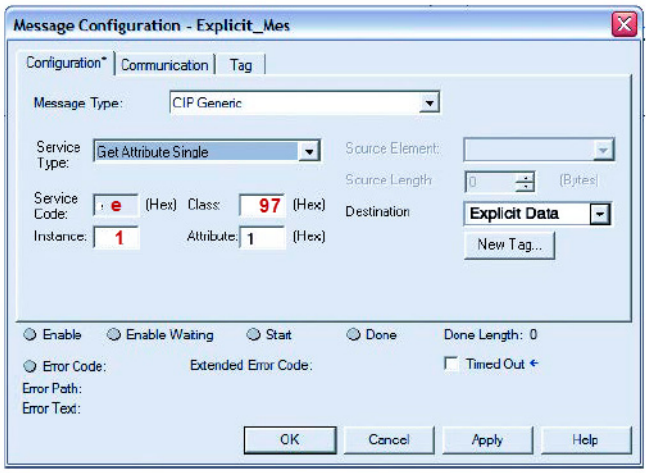

Demand Torque Off Considerations

ArmorStart EtherNet/IP does not support an STO option, therefore this capability must be implemented external to the ArmorStart in an enclosure that contains a safety circuit and safety rated contactors with the proper performance level required by the application. To achieve this level of safe performance without damage to the ArmorStart 284, it is required to have some coordination between the safety contactor state and the VFD operation. When there is a demand of the safety system, it is important that the ArmorStart VFD is disabled prior to the contactors opening. To accomplish this, configure one of digital inputs via parameter 151- 154, to option 9. Then see consumed instance 166. Byte 1, which includes the digit Drive Input 1-4. Include this Drive Input in the safety circuit so that the drive is forced to a coast to stop before the contactors open. This disables the ArmorStart, allowing the contactors to open without damaging the VFD.

Keypad Disable with DeviceLogix

HOA operation can be prevented dynamically without parameter modification, as follows:

The DeviceLogix program shown below turns off the keypad if both inputs are true and the keypad is in either “OFF” or “AUTO” mode.

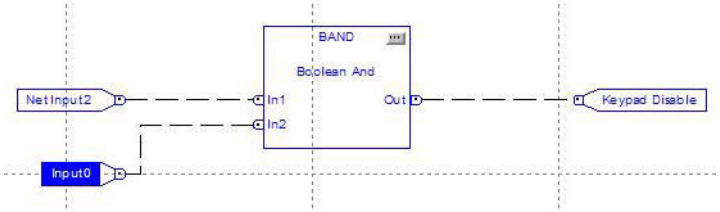

Note: If the user is already pressing the “HAND” button, the program does not disable the keypad; if the inputs are on after the “HAND” mode is actuated.

Motion Disable

The motion disable program disables motion regardless of the HOA status, PLC control, or DeviceLogix. Once motion disable is turned off, the ArmorStart or PLC resumes control of the motor again. The motion disable does not disable the HOA keypad. The keypad operation appears normal but it does not control the run command until the motion disable is off.

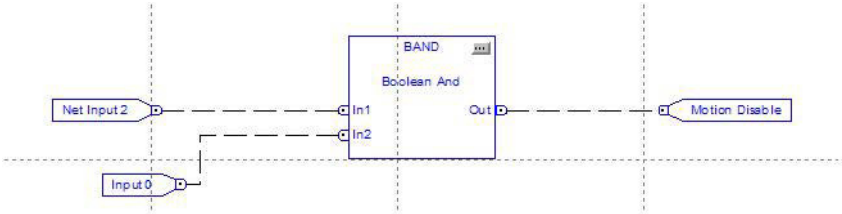

Manual Brake Control for ArmorStart via DeviceLogix

Electromechanical brake control in the ArmorStart controller is done by controlling the internal PowerFlex drive's output relay that is connected internally to the ArmorStart brake connector. During normal operation, the PowerFlex drive's output relay controls the brake automatically in response to "Run" and "Jog" commands. ArmorStart parameter 155 is set to a value of 22 = "EM Brake Control" to enable automatic brake control, and brake timing can be adjusted by changing the values of ArmorStart parameters 260 (EM Brk Off Delay) and 262 (EM Brk On Delay)

This automatic brake control can be overridden by programming one of the internal "Drive Digital Inputs" (there are 4 of them on a PF 40 unit) to manually control the brake.

Then the "Drive Digital Input" can be tied to an ArmorStart Input in a DeviceLogix program. The result is that the brake is manually controlled in response to the ArmorStart Input.

1. In RSNetWorx for DeviceNet, set parameter 151 "Digital In 1 Sel" to "Em Brk Rlse" as shown below.

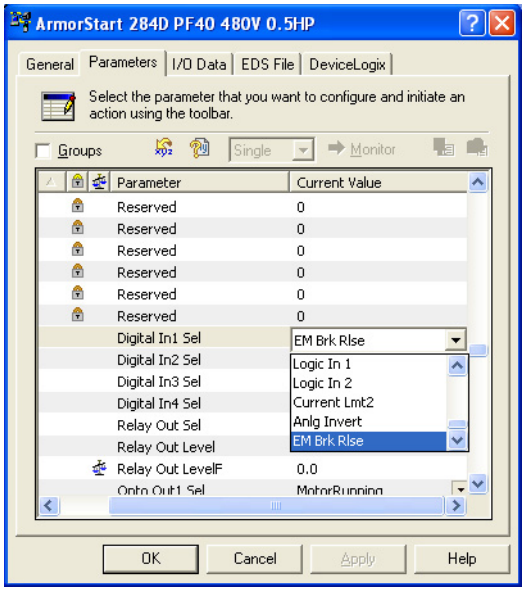

2. Next, invoke the DeviceLogix editor and tie “Input 0” to “Drv In 1” as shown below.

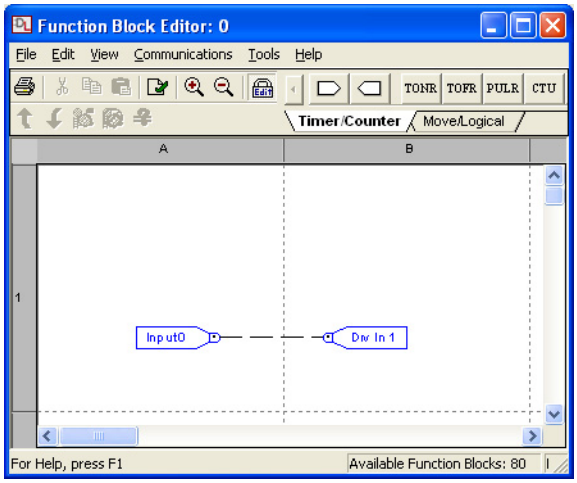

3. Download the program and enable DeviceLogix from the “Communications” menu.

4. Set parameters 8 and 9 (“Network Override and Comm Override”) to “Enabled” to allow the brake to be controlled manually even if there is no connection to a DeviceNet scanner.

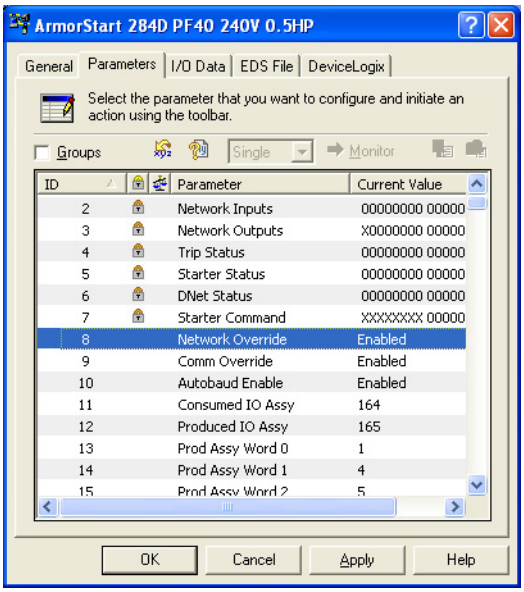

5. Turning on Input 0 releases the brake.

Accessories

DeviceNet Media

Table 173 - DeviceNet Media ❶

Description		Length m (ft)	Cat. No.
	KwikLink pigtail drops are Insulation Displacement Connector (IDC) with integral Class 1 round cables for interfacing devices or power supplies to flat cable		Sealed
		1 m (3.3)	1485P-P1E4-B1-N5
		2 m (6.5)	1485P-P1E4-B2-N5
		3 m (9.8)	1485P-P1E4-B3-N5
		6 m (19.8)	1485P-P1E4-B6-N5
	DeviceNet Mini- T-Port Tap	Right Keyway Left Keyway	1485P-P1N5-MN5NF 1485P-P1N5-MN5KM
	Gray PVC Thin Cable	**Connector**	**Cat. No.**
		Mini Straight Female Mini Straight Male	1485G-P❷N5-M5
		Mini Straight Female Mini Right Angle Male	1485G-P❷W5-N5
		Mini Right Angle Female Mini Straight Male	1485G-P❷M5-Z5
		Mini Right Angle Female Mini Straight Male	1485G-P❷W5-Z5
	Thick Cable	Mini Straight Female Mini Straight Male	1485C-P❸N5-M5
		Mini Straight Female Mini Right Angle Male	1485C-P❸W5-N5
		Mini Right Angle Female Mini Straight Male	1485C-P❸M5-Z5
		Mini Right Angle Female Mini Straight Male	1485C-P❸W5-Z5
	DeviceNet Configuration Terminal — Used to interface with objects on a DeviceNet network. Includes 1 m communications cable.	Length m (ft)	Cat. No.
		1 m (3.3)	193-DNCT
	Communication cable, color-coded bare leads	1 m (3.3)	193-CB1
	Communication cable, microconnector (male)	1 m (3.3)	193-CM1
	Panel Mount Adapter/Door Mount Bezel Kit	—	193-DNCT-BZ1

❶ See publication M116-CA001 for complete cable selection information.
❷ Replace symbol with desired length in meters (Example: Catalog Number 1485G-P1N5-M5 for a 1 m cable). Standard cable lengths: 1 m, 2 m, 3 m, 4 m, 5 m, and 6 m.
❸ Replace symbol with desired length in meters (Example: Catalog Number 1485C-P1N5-M5 for a 1 m cable). Standard cable lengths: 1 m, 2 m, 3 m, 4 m, 5 m, 6 m, 8 m, 10 m, 12 m, 18 m, 24 m, and 30 m.

NOTE: Stainless steel versions may be ordered by adding an "S" to the cat. no. (Example: Catalog Number 1485CS-P1N5-M5)

Sensor Media

Table 174 - Sensor Media ❶

Description	ArmorStart I/O Connection	Pin Count	Connector	Cat. No.
DC Micro Patchcord	Input	5-Pin	Straight Female Straight Male	889D-F4ACDM-❷
			Straight Female Right Angle Male	889D-F4AACDE-❷
DC Micro V-Cable	Input	5-pin	Straight Female	879D-F4ACDM-❷
			Right Angle Male	879D-R4ACM-❷
AC Micro Patchcord	Output	3-pin	Straight Female Straight Male	889R-F3AERM-❷
			Straight Female Right Angle Male	899R-F3AERE-❷

❶ See Publication M116-CA001 for complete cable selection information.
❷ Replace symbol with desired length in meters (Example: Catalog Number 889D-F4ACDM-1 for a 1 m cable). Standard cable lengths: 1 m, 2 m, 5 m, and 10 m.

Table 175 - Sealing Caps

Description	For Use With	Cat. No.
Plastic Sealing Cap (M12) ❸	Input I/O Connection	1485A-M12
Aluminum Sealing Cap (M12) ❸	Output I/O Connection	889A-RMCAP

❸ To achieve IP67 rating, sealing caps must be installed on all unused I/O connections.

Table 176 - Locking Clips

Description	Package QTY	Cat. No.
The clam shell design clips over the ArmorStart motor connector and motor cable to limit customer access.	10	280-MTR22-LC
	10	280-MTR35-LC

Table 177 - Dynamic Brake Modules (Bulletin 284 only)❶❷

Drive Ratings				Cat. No.
Input Voltage	kW	Hp	Min. Resistance (Ω)	
240V, 50/60 Hz, 3-Phase	0.4	0.5	48	AK-R2-091P500
	0.75	1.0	48	AK-R2-091P500
	1.5	2.0	48	AK-R2-091P500
	2.2	3.0	32	AK-R2-047P500
	3.7	5.0	19	AK-R2-047P500
480V, 50/60 Hz, 3-Phase	0.4	0.5	97	AK-R2-360P500
	0.75	1.0	97	AK-R2-360P500
	1.5	2.0	97	AK-R2-360P500
	2.2	3.0	97	AK-R2-120P1K2
	4.0	5.0	77	AK-R2-120P1K2

❶ Dynamic brake modules are IP00 rated.
❷ The resistors listed in this table are rated for 5% duty cycle.

Figure 96 - Dynamic Brake Modules Approximate Dimensions

Dimensions are not intended to be used for manufacturing purposes. Dimensions are in millimeters (inches) and weights are in kilograms (pounds).

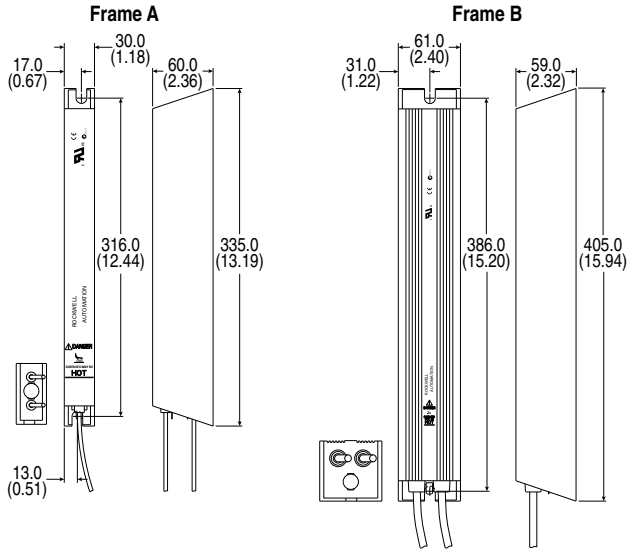

Frame	Cat. Nos.	Weight kg (lb)
A	AK-R2-091P500, AK-R2-047P500, AK-R2-360P500	1.1 (2.5)
B	AK-R2-030P1K2, AK-R2-120P1K2	2.7 (6)

Table 178 - IP67 Dynamic Brake Resistor

Drive and Motor Size kW	Part Number	Resistance Ohms ± 5%	Continuous Power kW	Max Energy kJ	Max Braking Torque % of Motor	Application Type 1		Application Type 2	
						Braking Torque % of Motor	Duty Cycle %	Braking Torque % of Motor	Duty Cycle %
200-240 Volt AC Input Drives									
0.37 (0.5)	284R-091P500	91	0.086	17	293%	100%	46%	150%	31%
0.75 (1)	284R-091P500	91	0.086	17	218%	100%	23%	150%	15%
1.5 (2)	284R-091P500	91	0.086	17	109%	100%	11%	109%	11%
400-480 Volt AC Input Drives									
0.37 (0.5)	284R-360P500	360	0.086	17	305%	100%	47%	150%	31%
0.75 (1)	284R-360P500	360	0.086	17	220%	100%	23%	150%	15%
1.5 (2)	284R-360P500	360	0.086	17	110%	100%	12%	110%	11%
2.2 (3)	284R-120P1K2	120	0.26	52	197%	100%	24%	150%	16%
4 (5)	284R-120P1K2	120	0.26	52	124%	100%	13%	124%	10%

Note: Always check the resistor ohms against minimum resistance for drive being used.

Note: Duty Cycle listed is based on full speed to zero speed deceleration. For constance regen at full speed, duty cycle capability is half of what is listed. Application Type 1 represents maximum capability up to 100% braking torque where possible. Application Type 2 represents more than 100% braking torque where possible, up to a maximum of 150%.

Figure 97 - Dynamic Brake Resistor Approximate Dimensions

Dimensions are not intended to be used for manufacturing purposes.

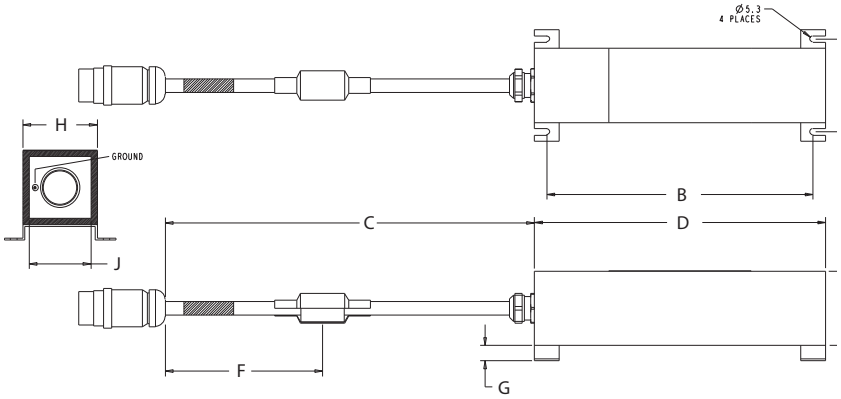

Table 179 - Dynamic Brake Resistor Approximate Dimensions

Cat No.	A mm (in.)	B mm (in.)	C	D mm (in.)	E mm (in.)	F mm (in.)	G mm (in.)	H mm (in.)	J mm (in.)
284R-091P500	89 ± 3 (3.5 ± 0.12)	215 ± 5 (8.46 ± 0.2)	*	235 ± 5 (9.25 ± 0.2)	60 ± 2 (2.36 ± 0.08)	127 (5)	12.54 (0.49)	60 ± 2 (2.36 ± 0.08)	50 ± 1.5 (1.97 ± 0.06)
284R-360P500									
284R120P1K2		420 ± 5 (16.54 ± 0.2)		440 ± 5 (17.32 ± 0.2)					

* Length is user-selectable based on the suffix added to the catalog number. For a length of 500±10mm, add **-M05** to the end of the catalog number. For a length of 1000±10mm, add **-M1** to the end of the catalog number.

Renewal Parts

Bulletin 280, 281

Control Module Renewal Part - Product Selection

Figure 98 - Bulletin 280, 281 Control Module Renewal Part Catalog Structure

280 D – F 12Z – N B – R – Option 1 – Option 2

Bulletin Number
280 Full Voltage Starter
281 Reversing Starter

Communications
D DeviceNet

Enclosure Type
F Type 4/12 (IP67)

Contactor Size/Control Voltage

24V DC	120V AC	240V AC
12Z	12D	12B
23Z	23D	23B

Control Module
N Control Module Only

Overload Selection

	Current Range
A	0.24…1.2
B	0.5…2.5 A
C	1.1…5.5 A
D	3.2…16 A

Motor Connection
R Round

Option 1
3 Hand-Off-Auto Selector Keypad
3FR Hand-Off-Auto Selector Keypad with Forward/Reverse

Option 2
SM Safety Monitor

Table 180 - Full Voltage Starters — IP67/ Type 4/12, Up to 480V AC

Current Rating [A]	kW		Hp				Cat. No.		
	230V AC 50 Hz	400V AC 50 Hz	200V AC 60 Hz	230V AC 60 Hz	460V AC 60 Hz	575V AC 60 Hz	24V DC	120V AC	240V AC
0.24…1.2	0.18	0.37	—	—	0.5	0.5	280D-F12Z-NA-R	280D-F12D-NA-R	280D-F12B-NA-R
0.5…2.5	0.37	0.75	0.5	0.5	1	1.5	280D-F12Z-NB-R	280D-F12D-NB-R	280D-F12B-NB-R
1.1…5.5	1.1	2.2	1	1	3	3	280D-F12Z-NC-R	280D-F12D-NC-R	280D-F12B-NC-R
3.2…16	4	7.5	3	5	10	10	280D-F23Z-ND-R	280D-F23D-ND-R	280D-F23B-ND-R

Table 181 - Reversing Starters — IP67/ Type 4/12, Up to 480V AC

Current Rating [A]	kW		Hp				Cat. No.		
	230V AC 50 Hz	400V AC 50 Hz	200V AC 60 Hz	230V AC 60 Hz	460V AC 60 Hz	575V AC 60 Hz	24V DC	120V AC	240V AC
0.24…1.2	0.18	0.37	—	—	0.5	0.5	281D-F12Z-NA-R	281D-F12D-NA-R	281D-F12B-NA-R
0.5…2.5	0.37	0.75	0.5	0.5	1	1.5	281D-F12Z-NB-R	281D-F12D-NB-R	281D-F12B-NB-R
1.1…5.5	1.1	2.2	1	1	3	3	281D-F12Z-NC-R	281D-F12D-NC-R	281D-F12B-NC-R
3.2…16	4	7.5	3	5	10	10	281D-F23Z-ND-R	281D-F23D-ND-R	281D-F23B-ND-R

Bulletin 280

Base Module Renewal Part - Product Selection

Table 182 - Bulletin 280 Base Module Renewal Part Catalog Structure

280 D – F N – 10 – C – Option

Bulletin Number
280 Starter

Communications
D DeviceNet

Enclosure Type
F Type 4/12 (IP67)

N Base Only
No Control Module

Short Circuit Protection (Bul. 140M)
10 10 A Rated Device
25 25 A Rated Device

Line Connection
C Conduit Entrance
R ArmorConnect Power Media

Option
SM Safety Monitor

Table 183 - Bul. 280 Full Voltage Starters & Bul. 281 Reversing Starters — IP67/Type 4/12, Up to 575V AC with Conduit Entrance

Current Rating [A]	kW		Hp			Cat. No.
	230V AC 50 Hz	400V AC 50 Hz	200V AC 60 Hz	230V AC 60 Hz	460V AC 60 Hz	
0.24…1.2	0.18	0.37	—	—	0.5	280D-FN-10-C
0.5…2.5	0.37	0.75	0.5	0.5	1	280D-FN-10-C
1.1…5.5	1.1	2.2	1	1	3	280D-FN-10-C
3.2…16	4	7.5	3	5	10	280D-FN-25-C

Table 184 - Bul. 280 Full Voltage Starters & Bul. 281 Reversing Starters — IP67/Type 4/12, Up to 575V AC with ArmorConnect Connectivity

Current Rating [A]	kW		Hp			Cat. No.
	230V AC 50 Hz	400V AC 50 Hz	200V AC 60 Hz	230V AC 60 Hz	460V AC 60 Hz	
0.24…1.2	0.18	0.37	—	—	0.5	280D-FN-10-R
0.5…2.5	0.37	0.75	0.5	0.5	1	280D-FN-10-R
1.1…5.5	1.1	2.2	1	1	3	280D-FN-10-R
3.2…16	4	7.5	3	5	10	280D-FN-25-R

Table 185 - Motor Cables

Description	Current Rating (A)	Cable Rating	Length m (ft)	Cat. No.
90° M22 Motor Cordset	0.24…1.2, 0.5…2.5 1.1…5.5	IP67/Type 4/12	3 (9.8)	280-MTRM22-M3
			6 (19.6)	280-MTR22-M6
			14 (45.9)	280-MTR22-M14
90° M35 Motor Cordset	3.2…16	IP67/Type 4/12	3 (9.8)	280-MTRM35-M3
			6 (19.6)	280-MTR35-M6
			14 (45.9)	280-MTR35-M14
90° Male/Straight Female — M22 Patchcords	0.24…1.2, 0.5…2.5 1.1…5.5	IP67/Type 4/12	1 (3.3)	280-MTR22-M1D
			3 (9.8)	280-MTR22-M3D
90° Male/Straight Female — M35 Patchcords	3.2…16	IP67/Type 4/12	1 (3.3)	280-MTR35-M1D
			3 (9.8)	280-MTR35-M3D

Bulletin 284

Control Module Renewal Part - Product Selection

Figure 99 - Bulletin 284 Control Module Renewal Part Catalog Structure

284 D – F H D2P3 D – N – R – Option 1 – Option 2 – Option 3

Bulletin Number
284 VFD Starter

Communications
D DeviceNet

Enclosure Type
F Type 4 (IP67)

Torque Performance Mode
H Volts per Hz (Sensorless Vector Performance)
V Sensorless Vector Control Volts per Hz

Output Current

Code	Output Current (A)	kW	Hp
230V Drive			
B2P3	2.3	0.4	0.5
B4P5	4.5	0.75	1 (H only)
B5P0	5	0.75	1 (V only)
B7P6	7.5	1.5	2
480V Drive			
D1P4	1.4	0.4	0.5
D2P3	2.3	0.75	1
D4P0	4	1.5	2
D6P0	6	2.2	3
D7P0	7.6	4	5

Control Voltage
Z 24V DC
D 120V AC
B 240V AC

Control Module
N Control Module Only

Option 3
A10 0…10 mA Analog Input
EMI EMI Filter
OC Output Contactor
SM Safety Monitor

Option 2
CB Control Brake Connector
DB DB Brake Connector
DB1 DB Brake Connector for IP67 Dynamic Brake Resistor
SB Source Brake Connector

Option 1
3 Hand-Off-Auto Selector Keypad with Jog Function
Blank Status Only

Motor Media Type
R Round

Table 186 - Bulletin 284 Control Module with Sensorless Vector Performance, IP67/Type 4/12, Up to 480V

Input Voltage	kW	Hp	Output Current	24 V DC Control Voltage	120 V AC Control Voltage	240 V AC Control Voltage
240V 50/60 Hz 3-Phase	0.4	0.5	2.3 A	284D-FHB2P3Z-N-R	284D-FHB2P3D-N-R	284D-FHB2P3B-N-R
	0.7.5	1.0	4.5 A	284D-FHB4P5Z-N-R	284D-FHB4P5D-N-R	284D-FHB4P5B-N-R
	1.5	2.0	7.6 A	284D-FHB7P6Z-N-R	284D-FHB7P6D-N-R	284D-FHB7P6B-N-R
480V 50/60 Hz 3-Phase	0.4	0.5	1.4 A	284D-FHD1P4Z-N-R	284D-FHD1P4D-N-R	284D-FHD1P4B-N-R
	0.75	1.0	2.3 A	284D-FHD2P3Z-N-R	284D-FHD2P3D-N-R	284D-FHD2P3B-N-R
	1.5	2.0	4.0 A	284D-FHD4P0Z-N-R	284D-FHD4P0D-N-R	284D-FHD4P0B-N-R
	2.2	3.0	6.0 A	284D-FHD6P0Z-N-R	284D-FHD6P0D-N-R	284D-FHD6P0B-N-R
	3.0	5.0	7.6 A	284D-FHD7P6Z-N-R	284D-FHD7P6D-N-R	284D-FHD7P6B-N-R

Table 187 - Bulletin 284 Control Module with Sensorless Vector Control , IP67/Type 4/12, Up to 600V

Input Voltage	kW	Hp	Output Current	24 V DC Control Voltage	120 V AC Control Voltage	240 V AC Control Voltage
200..240V 50/60 Hz 3-Phase	0.4	0.5	2.3 A	284D-FVB2P3Z-N-R	284D-FVB2P3D-N-R	284D-FVB2P3B-N-R
	0.75	1.0	5.0 A	284D-FVB5P0Z-N-R	284D-FVB5P0D-N-R	284D-FVB5P0B-N-R
	1.5	2.0	7.6 A	284D-FVB7P6Z-N-R	284D-FVB7P6D-N-R	284D-FVB7P6B-N-R
380…480V 50/60 Hz 3-Phase	0.4	0.5	1.4 A	284D-FVD1P4Z-N-R	284D-FVD1P4D-N-R	284D-FVD1P4B-N-R
	0.75	1.0	2.3 A	284D-FVD2P3Z-N-R	284D-FVD2P3D-N-R	284D-FVD2P3B-N-R
	1.5	2.0	4.0 A	284D-FVD4P0Z-N-R	284D-FVD4P0D-N-R	284D-FVD4P0B-N-R
	2.2	3.0	6.0 A	284D-FVD6P0Z-N-R	284D-FVD6P0D-N-R	284D-FVD6P0B-N-R
	3.0	5.0	7.6 A	284D-FVD7P6Z-N-R	284D-FVD7P6D-N-R	284D-FVD7P6B-N-R

Bulletin 284, Base Module

Base Module Renewal Part - Product Selection

Figure 100 - Bulletin 284 Base Module Renewal Part Catalog Structure

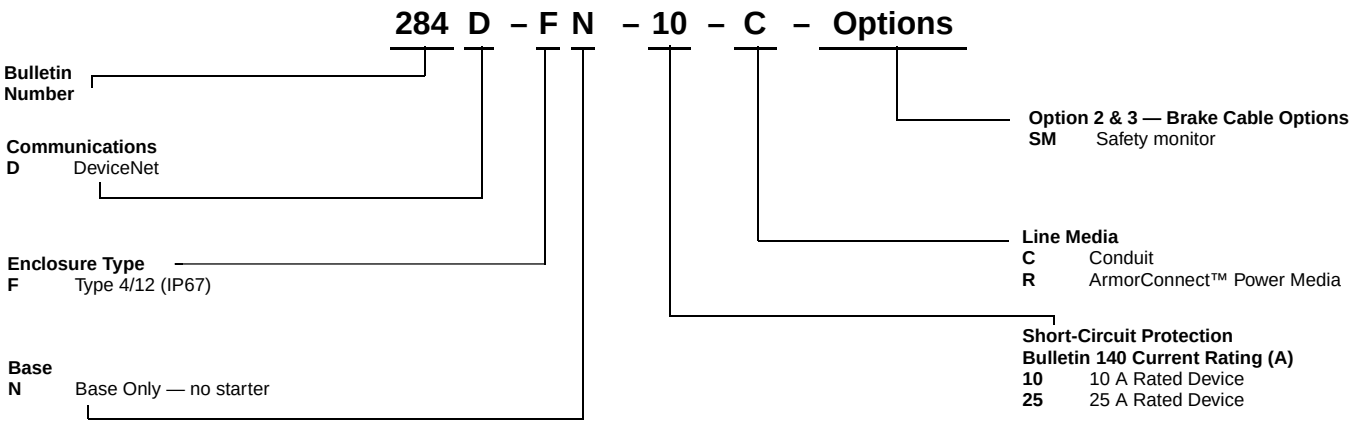

Table 188 - Bulletin 284 Base Module Renewal Part, IP67/Type 4/12, Up to 480V AC With Conduit Entrance

Input Voltage	kW	Hp	Output Current	Cat. No.
200..240V 50/60 Hz 3-Phase	0.4…0.75	0.5…1.0	2.3 A	280D-FN-10-C
	1.5	2.0	7.6 A	280D-FN-25-C
380…480V 50/60 Hz 3-Phase	0.4…2.2	0.5…3.0	1.4…4.0 A	280D-FN-10-C
	3.0	5.0	6.0…7.6 A	280D-FN-25-C
460…600V 50/60Hz 3-Phase	0.75…1.5	1.0…2.0	1.7....3.0 A	280D-FN-10-C
	2.2...4.0	3.0...5.0	4.2...6.6 A	280D-FN-25-C

Table 189 - Bulletin 284 Base Module Renewal Part, IP67/Type 4/12, Up to 480V AC with ArmorConnect Connectivity

Input Voltage	kW	Hp	Output Current	Cat. No.
200..240V 50/60 Hz 3-Phase	0.4…0.75	0.5…1.0	2.3 A	280D-FN-10-R
	1.5	2.0	7.6 A	280D-FN-25-R
380…480V 50/60 Hz 3-Phase	0.4…2.2	0.5…3.0	1.4…4.0 A	280D-FN-10-R
	3.0	5.0	6.0…7.6 A	280D-FN-25-R
460…600V 50/60Hz 3-Phase	0.75…1.5	1.0…2.0	1.7....3.0 A	280D-FN-10-R
	2.2...4.0	3.0...5.0	4.2...6.6 A	280D-FN-25-R

Table 190 - Motor Cables

Description	Cable Rating	Length [m (ft)]	Cat. No.
90° M22 Motor Cordset	IP67/Type 4/12	3 m (9.8)	280-MTR22-M3
		6 m (19.6)	280-MTR22-M6
		14 m (45.9)	280-MTR22-M14
90° M22 Motor Cordset (Shielded)	IP67/Type 4/12	3 m (9.8)	284-MTRS22-M3
		6 m (19.6)	284-MTRS22-M6
		14 m (45.9)	284-MTRS22-M14
90° Male/ Straight Female- M22 Pathcords	IP67/Type 4/12	1 m (3.3)	280-MTR22-M1D
		3.0 m (9.8)	280-MTR22-M3D

Table 191 - Dynamic Brake Cable

Description	Cable Rating	Length [m (ft)]	Cat. No.
90° M25 Source Brake Cable	IP67/Type 4/12	3m (9.8)	285-DBK22-M3

Table 192 - Source Brake Cable

Description	Cable Rating	Length [m (ft)]	Cat. No.
90° M25 Source Brake Cable	IP67/Type 4/12	3m (9.8)	285-BRC25-M3
		6 m (19.6)	285-BRC25-M6
		14 m (45.9)	285-BRC25-M14

Table 193 - Miscellaneous

Description	Notes	Qty	Cat. No.
Internal Replacement Fan	—	—	284-FAN
Alignment Pin	Replacement ONLY if base and control module have provision for it. Cannot retrofit without placement	2/each	284-PIN

Rockwell Automation Support

Rockwell Automation provides technical information on the Web to assist you in using its products.
At http://www.rockwellautomation.com/support you can find technical and application notes, sample code, and links to software service packs. You can also visit our Support Center at https://rockwellautomation.custhelp.com/ for software updates, support chats and forums, technical information, FAQs, and to sign up for product notification updates.

In addition, we offer multiple support programs for installation, configuration, and troubleshooting. For more information, contact your local distributor or Rockwell Automation representative, or visit http://www.rockwellautomation.com/services/online-phone.

Installation Assistance

If you experience a problem within the first 24 hours of installation, review the information that is contained in this manual. You can contact Customer Support for initial help in getting your product up and running.

United States or Canada	1.440.646.3434
Outside United States or Canada	Use the Worldwide Locator at http://www.rockwellautomation.com/rockwellautomation/support/overview.page, or contact your local Rockwell Automation representative.

New Product Satisfaction Return

Rockwell Automation tests all of its products to help ensure that they are fully operational when shipped from the manufacturing facility. However, if your product is not functioning and needs to be returned, follow these procedures.

United States	Contact your distributor. You must provide a Customer Support case number (call the phone number above to obtain one) to your distributor to complete the return process.
Outside United States	Please contact your local Rockwell Automation representative for the return procedure.

Documentation Feedback

Your comments will help us serve your documentation needs better. If you have any suggestions on how to improve this document, complete this form, publication RA-DU002, available at http://www.rockwellautomation.com/literature/.

Rockwell Automation maintains current product environmental information on its website at
http://www.rockwellautomation.com/rockwellautomation/about-us/sustainability-ethics/product-environmental-compliance.page.

Rockwell Otomasyon Ticaret A.Ş., Kar Plaza İş Merkezi E Blok Kat:6 34752 İçerenköy, İstanbul, Tel: +90 (216) 5698400

www.rockwellautomation.com

Power, Control and Information Solutions Headquarters

Americas: Rockwell Automation, 1201 South Second Street, Milwaukee, WI 53204-2496 USA, Tel: (1) 414.382.2000, Fax: (1) 414.382.4444
Europe/Middle East/Africa: Rockwell Automation NV, Pegasus Park, De Kleetlaan 12a, 1831 Diegem, Belgium, Tel: (32) 2 663 0600, Fax: (32) 2 663 0640
Asia Pacific: Rockwell Automation, Level 14, Core F, Cyberport 3, 100 Cyberport Road, Hong Kong, Tel: (852) 2887 4788, Fax: (852) 2508 1846

Publication 280-UM002C-EN-P - September 2015
Supersedes Publication XXXX-X.X.X - Month Year

Copyright © 2015 Rockwell Automation, Inc. All rights reserved. Printed in the U.S.A.