Allen-Bradley

SynchLink™

1756-SYNCH, 1756-DMxxx Series, PowerFlex 700S

Design Guide

Rockwell Automation

Important User Information

Because of the variety of uses for the products described in this publication, those responsible for the application and use of these products must satisfy themselves that all necessary steps have been taken to assure that each application and use meets all performance and safety requirements, including any applicable laws, regulations, codes and standards. In no event will Allen-Bradley be responsible or liable for indirect or consequential damage resulting from the use or application of these products.

Any illustrations, charts, sample programs, and layout examples shown in this publication are intended solely for purposes of example. Since there are many variables and requirements associated with any particular installation, Allen-Bradley does not assume responsibility or liability (to include intellectual property liability) for actual use based upon the examples shown in this publication.

Allen-Bradley publication SGI-1.1, *Safety Guidelines for the Application, Installation and Maintenance of Solid-State Control* (available from your local Allen-Bradley office), describes some important differences between solid-state equipment and electromechanical devices that should be taken into consideration when applying products such as those described in this publication.

Reproduction of the contents of this copyrighted publication, in whole or part, without written permission of Rockwell Automation, is prohibited.

Throughout this publication, notes may be used to make you aware of safety considerations. The following annotations and their accompanying statements help you to identify a potential hazard, avoid a potential hazard, and recognize the consequences of a potential hazard:

WARNING

Identifies information about practices or circumstances that can cause an explosion in a hazardous environment, which may lead to personal injury or death, property damage, or economic loss.

ATTENTION

Identifies information about practices or circumstances that can lead to personal injury or death, property damage, or economic loss.

IMPORTANT

Identifies information that is critical for successful application and understanding of the product.

Rockwell Automation Support

Before you contact Rockwell Automation for technical assistance, we suggest you please review the troubleshooting information contained in this publication first.

If the problem persists, call your local distributor or contact Rockwell Automation in one of the following ways:

Phone	United States/Canada	1.440.646.5800
	Outside United States/Canada	You can access the phone number for your country via the Internet: 1. Go to http://www.ab.com 2. Click on *Product Support* (http://support.automation.rockwell.com) 3. Under *Support Centers,* click on *Contact Information*
Internet	⇒	1. Go to http://www.ab.com 2. Click on *Product Support* (http://support.automation.rockwell.com)

Your Questions or Comments on this Manual

If you find a problem with this manual, please notify us of it on the enclosed How Are We Doing form.

What This Document Contains

This preface describes what information this publication contains and how to use the publication.

For information about:	See page:
Purpose of This Publication	Preface-1
Who Should Use This Publication	Preface-1
What Information This Publication Contains	Preface-2

Purpose of This Publication

The purpose of this publication is to provide:

- a detailed description of SynchLink and the products that operate on it, including:
  - ControlLogix™ SynchLink module (1756-SYNCH),
  - ControlLogix Drive modules (1756-DMxxx Series),
  - PowerFlex™ 700S drives.

  For a full description of each of these products, see Chapter 3, Using Specific Products on SynchLink.
- instructions and recommendations on how to design, install and maintain a SynchLink fiber optic cable system.

IMPORTANT To successfully apply the concepts and techniques in this manual, you must have a fundamental knowledge of electronics and electrical codes.

This manual describes cable installation inside a manufacturing facility. Other types of SynchLink installations are not permitted.

Who Should Use This Publication

Anyone who wants to understand SynchLink and products that work on the link or anyone who needs to design, install and maintain a SynchLink fiber optic cable system should use this publication.

What Information This Publication Contains

This publication includes the following sections:

Chapter 1 - Overview of SynchLink

Chapter 2 - SynchLink Topologies

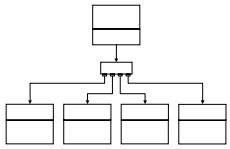

Chapter 3 - Using Specific Products on SynchLink

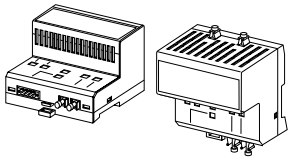

Chapter 4 - Specific SynchLink Configurations

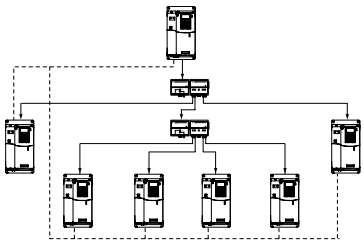

Chapter 5 - Overview of the SynchLink Fiber Optic Cable System

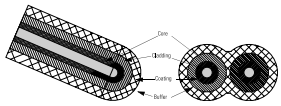

Chapter 6 - Planning a SynchLink Fiber Optic Cable System

Chapter 7 - Installing a SynchLink Fiber Optic Cable System

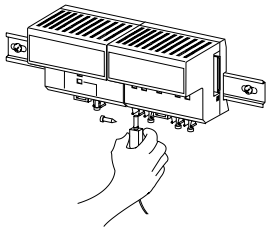

Chapter 8 - Guidelines for SynchLink Fiber Optic Cable Installation

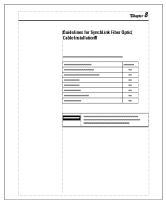

Chapter 9 - Maintenance and Troubleshooting

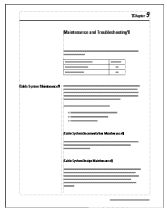

Appendix A - Specifications

Glossary

Related Documentation

Table Preface.1 lists the related documentation that may help you use products on SynchLink.

Table Preface.1

Catalog Number	Document Title	Publication Number
1756-SYNCH	ControlLogix SynchLink Module Installation Instructions	1756-IN575
1756-SYNCH	ControlLogix SynchLink Module User Manual	1756-UM521
1756-DMD30, 1756-DMF30	ControlLogix Drive Modules Installation Instructions	1756-IN577
1756-DMD30, 1756-DMF30	ControlLogix Drive Modules User Manual	1756-UM522
PowerFlex 700S	PowerFlex 700S User Manual	20D-UM001
1751-SLBA	SynchLink Base Block Installation Instructions	1751-IN001
1751-SL4SP	SynchLink 4-port Splitter Block Installation Instructions	1751-IN002
1751-SLBP	SynchLink Bypass Switch Block Installation Instructions	1751-IN003
1756-A4, -A7, -A10, -A13	ControlLogix Chassis Installation Instructions	1756-IN080B
1756-PA72, -PB72	ControlLogix Power Supply Installation Instructions	1756-5.67
1756-PA75, -PB75	ControlLogix Power Supply Installation Instructions	1756-5.78
1756-Series	ControlLogix System User Manual	1756-UM001

Notes:

Chapter 1

Overview of SynchLink

What is SynchLink? 1-1
SynchLink Operation. 1-2
Time Synchronization. 1-2
Data Transfer. 1-6
Transmitted Direct Words. 1-8
SynchLink Transmitted Axes. 1-10
Chapter Summary 1-10

Chapter 2

SynchLink Topologies

Star Topology 2-2
Daisy Chain Topology 2-3
Ring Topology. 2-4
Chapter Summary 2-4

Chapter 3

Using Specific Products on SynchLink

ControlLogix SynchLink Module (1756-SYNCH) 3-1
Transferring Data With the SynchLink Module. 3-2
ControlLogix SynchLink Module Features 3-2
Related Documents 3-2
ControlLogix Drive Modules (1756-DMxxx Series) 3-3
Interface to Distributed Power System Drive Equipment 3-3
Transferring Data With the Drive Modules 3-4
ControlLogix Drive Module Features. 3-4
PowerFlex 700S Drive 3-5
Transferring Data With the PowerFlex 700S Drives 3-5
PowerFlex 700S Drive Features. 3-6
Connecting Products to SynchLink. 3-7
SynchLink Hub 3-7
SynchLink Bypass Switch Block 3-8
Fiber Optic Cables 3-10
Configuring Products for Use on SynchLink 3-11
Chapter Summary 3-11

Chapter 4

Specific SynchLink Configurations

Difference Between Topologies and Configurations 4-1
SynchLink Functionality in Each Device 4-2
1756-SYNCH Module 4-2
1756-DMxxx Drive Modules 4-3
PowerFlex 700S Drive 4-5
Star Topology Configurations 4-6
Daisy Chain Topology Configurations. 4-9
Ring Topology Configurations 4-13
Additional Configurations. 4-15
Chapter Summary 4-19

Overview of the SynchLink Fiber Optic Cable System

Chapter 5

Applying the SynchLink System 5-2
Analyzing your SynchLink Application 5-2
Identifying System Components 5-4
Planning System Installation 5-4
Installing the System 5-4
Powering your System 5-5
Chapter Summary 5-5

Planning a SynchLink Fiber Optic Cable System

Chapter 6

Developing a Plan. 6-1
Selecting a Topology. 6-2
Planning Installation of the System Components. 6-3
Estimating Cable Lengths. 6-4
Chapter Summary 6-4

Installing a SynchLink Fiber Optic Cable System

Chapter 7

Using Pre-terminated
Fiber Cable 7-2
Using Cable System Components. 7-2
Mounting and Removing Your Fiber Blocks 7-5
Chapter Summary 7-5

Guidelines for SynchLink Fiber Optic Cable Installation

Chapter 8

Following General Rules for Safety 8-2
Guidelines for Handling Fiber Optic Cable 8-2
Cable Protection and Isolation Recommendations. 8-4
Cable Protection 8-4
Chemical and Thermal Isolation 8-4
Physical Isolation. 8-5
Pre-Terminated Cable Installation Guidelines 8-5
Cable Inspection and Testing 8-5
Cable Pulling 8-5
Unterminated Cable Installation Guidelines 8-6
Direct Attachment 8-6
Indirect Attachment 8-6
Conduit and Duct Installation. 8-7
Vertical Installation 8-9
Plans for Vertical Cable Installation. 8-9
Chapter Summary 8-10

Chapter 9

Maintenance and Troubleshooting
Cable System Maintenance 9-1
Cable System Documentation Maintenance 9-1
Cable System Design Maintenance 9-1
Cable System Inspection. 9-2
Measuring Power Loss. 9-2
Chapter Summary 9-2

Appendix A

Specifications
. . . . . A-8

Appendix B

SynchLink Fiber Optic Cable Description
Advantages of Fiber B-1
Optical Fiber Construction B-2
Hard Clad Silica Fiber B-3
Cable Assemblies B-4

Glossary

Index

Overview of SynchLink

This chapter provides an overview of SynchLink and how it works.

For information about:	See page:
What is SynchLink?	1-1
SynchLink Operation	1-2
Time Synchronization	1-2
Data Transfer	1-6

What is SynchLink?

SynchLink is a fiber optic communication link that allows its users to implement distributed motion and drive systems based on ControlLogix and PowerFlex700S products.

SynchLink should be used in conjunction with a standard control network, such as ControlNet or Ethernet/IP. A standard network is used for general control interlocking and transfer of diagnostic data across the system. SynchLink does not function as a standard control network (e.g. it only broadcasts data).

You can use the following products on SynchLink:

- ControlLogix SynchLink module (1756-SYNCH)
- ControlLogix Drive modules (1756-DMxxx series)
- PowerFlex 700S drives (DriveLogix)

For more information on these products, see Chapter 3, Using Specific Products on SynchLink.

SynchLink Operation

In the simplest terms, you can use SynchLink to:

- synchronize time
- transfer data, including axis data for synchronized mtion control and general data

Time Synchronization

SynchLink uses a time master-slave mechanism to achieve time synchronization. Time synchronization in a SynchLink system is required to:

- transfer motion and drive control data.
- synchronize distributed 1756-DMxxx series modules in separate chassis.
- synchronize distributed PowerFlex 700S drives for highly coordinated drive control.
- synchronize multiple distributed motion control planners across separate chassis for highly coordinated motion control.

SynchLink Node Clock

The SynchLink node clock is a base-line requirement of any product incorporating SynchLink and integral to all devices that contain SynchLink circuitry. The SynchLink node clock has a 1µS resolution and serves as the system clocking mechanism.

During system configuration, you configure one SynchLink node as the time master and all other SynchLink nodes as time slaves. The time master becomes the system clock for the entire control system. As such, the SynchLink time master broadcasts its time reference to the SynchLink time slaves; the time slaves, in turn, adjust their node clocks to match the master clock.

Because SynchLink is a broadcasting mechanism, the master is always placed at the beginning of SynchLink systems, such as the star configuration in Figure 1.1.

Figure 1.1

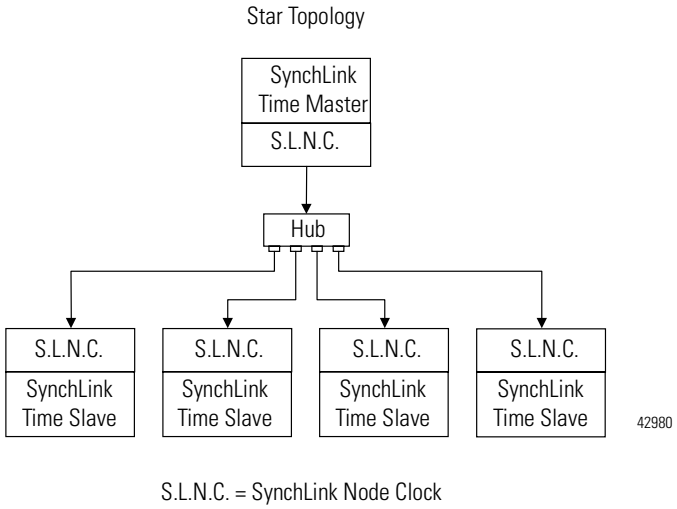

SynchLink System Synchronization

When a SynchLink system is initialized, the individual SynchLink nodes power-up at separate times, and the individual SynchLink node clocks begin to count at arbitrary points in time; the system is not yet synchronized.

As the time master node clock counts, it reaches a point where it rolls over and goes back to zero. When the rollover occurs, the SynchLink time master transmits a beacon signal to the SynchLink time slaves; the beacon is included in the control field of the transmitted message. When the SynchLink time slave receives the first message with the beacon signal, it begins to adjust the 1µS time base of its node clock to synchronize with the time master node clock.

Figure 1.2

Initial Start-Up

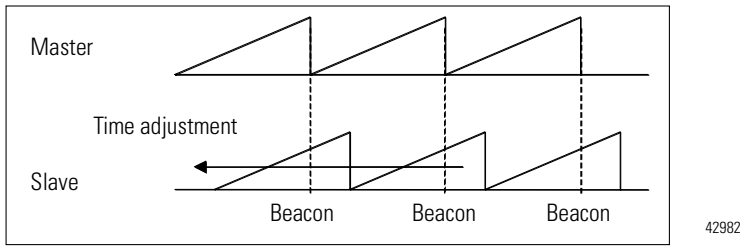

Synchronized Operation

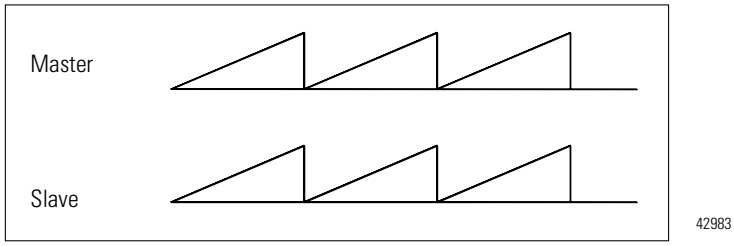

After a SynchLink time slave is synchronized with the time master, each SynchLink frame that is transmitted serves as a 50µS "tick" (or mark) used for the periodic adjustment of its clock's 1µS time base. This process provides highly accurate results.

Figure 1.3

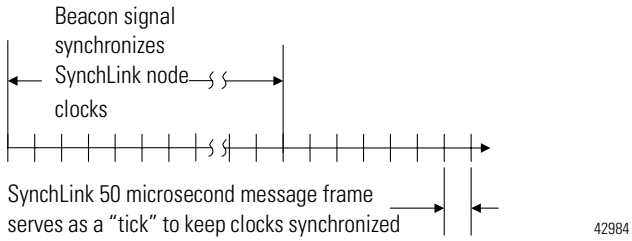

Using the ControlLogix Coordinated System Time (CST)

The CST is the clocking mechanism used to achieve time synchronization in a ControlLogix chassis; in the future, the CST will be used in a DriveLogix system. The ControlLogix CST clock is a 64-bit clock on the backplane of the ControlLogix chassis. It has a 1µS resolution and is used as the main time reference for all modules plugged into a chassis backplane.

For more information on how the ControlLogix CST affects the operation of other ControlLogix products, see the ControlLogix System User Manual, publication 1756-UM001.

Time Synchronization in a Distributed Control System

The CST mechanism synchronizes ControlLogix chassis in a distributed control system. In this case, SynchLink transfers the CST value from the CST master chassis to CST slave chassis. At the time of the publication, each chassis must be equipped with at least a controller and a SynchLink module to synchronize time.

How Do the CST Clock and SynchLink Node Clock Work Together?

The CST is the main time reference for all modules plugged into a ControlLogix chassis. The SynchLink node clock is used to establish the time reference on the SynchLink fiber.

Figure 1.4 illustrates how the SynchLink node clock and the CST time reference are coordinated in a system. In this example, the SynchLink modules in chassis A & B synchronize the CST clock in chassis B with the CST reference in chassis A.

Chassis A is the time master for the system. When the SynchLink module strobes the beacon signal onto the fiber optic link, it also transmits the CST time reference value that tells the downstream node what time it is as the beacon occurs. The downstream chassis receives the CST time reference and synchronizes its time with the CST reference value on the beacon signal.

Figure 1.4

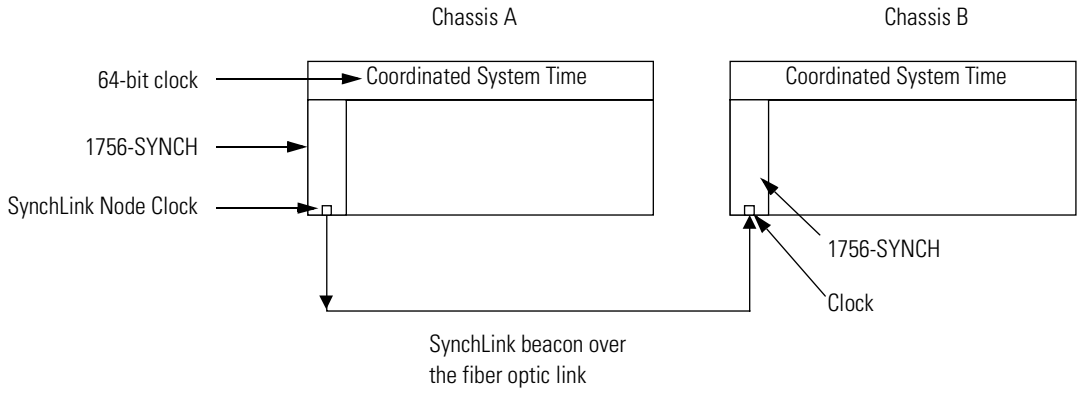

The SynchLink modules in Figure 1.4 must be correctly configured (via RSLogix 5000) to make sure the system is synchronized. For more information on how to configure ControlLogix SynchLink modules, see the ControlLogix SynchLink module user manual, publication 1756-UM521.

Data Transfer

You can transfer the following types of reference data over SynchLink:

- Produced axis data for chassis to chassis remote axis control - 1756-SYNCH module only
- High speed drive reference data for chassis-to-drive control or drive-to-drive control
- General control information that requires transfer at a high speed and in a synchronized manner

For SynchLink and Drive modules, the communications format (chosen during product configuration) determines what type of data is transferred between them. The data type transfers are asynchronous from each other.

SynchLink messages are structured as six 32-bit words; the actual available amount of data transferred (direct, buffered or axis) is configured on a module-by-module basis. The words are divided into three types:

- **Direct** - Data delivered in a single message. A SynchLink message can contain a maximum of four direct data words; each word is 32 bits in length. Direct data can be automatically forwarded to the next SynchLink node in the daisy chain or ring configurations, as shown below.

Direct data is automatically copied from the receive port to the transmit port (without host controller[1] intervention) and transferred to the next SynchLink node.

(1) The local ControlLogix controller must move data from one port to another (e.g. via ladder logic).

SynchLink Node

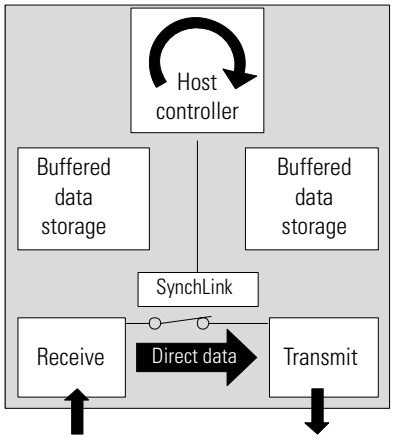

43186

- **Buffered** - Data that exceeds the four-word limit of a direct data transfer. Buffered data is appropriately segmented at the transmitting device and reassembled at the receiving device. Buffered data cannot be automatically forwarded to the next SynchLink node in the daisy chain or ring configurations. In this case, transferring buffered data to the next node requires intervention by the host controller, as shown below.

Buffered data must be copied from the receive port to the transmit port (via host controller intervention) before it can be transferred to the next SynchLink node.

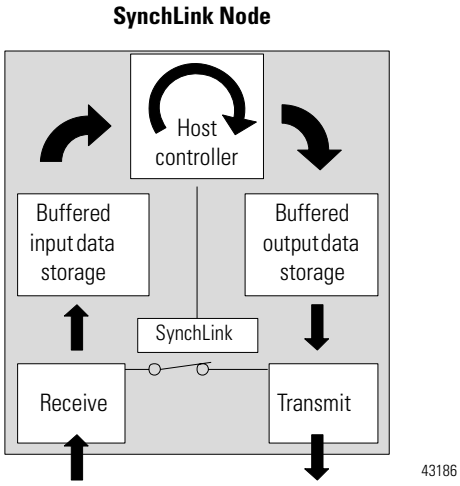

- **Axis** data - Motion data used by the motion planner in the controller. **Only the 1756-SYNCH module** can produce/consume Axis data to/from its local controller, as shown below.

In this graphic, the following events occur:

1. The 1756-L55 controller in chassis A produces axis data.
2. The 1756-SYNCH module in chassis A consumes the axis data from the backplane and produces it on SynchLink.
3. The 1756-SYNCH modules in chassis B & C consume the axis data from SynchLink and produce it on their local backplanes.
4. The 1756-L55 controllers in chassis B & C consume the axis data from the backplane and use it in their motion planners.

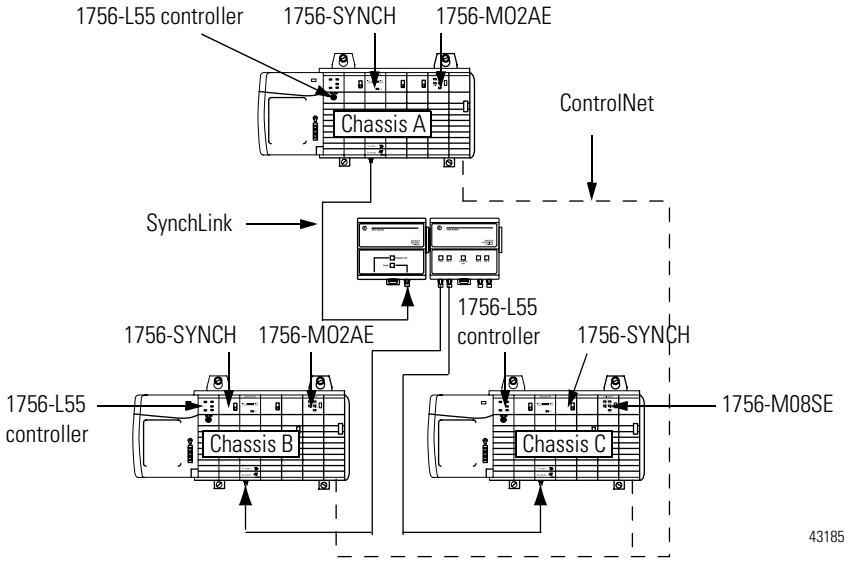

Axis data is not automatically forwarded to the next SynchLink node in daisy chain or ring configurations. The data transfer requires host controller intervention similar to that shown above because axis data is a specific form of buffered data.

Transmitted Direct Words

The devices that operate on SynchLink can be configured to transmit data from the following direct word sources:

- Output Direct Words (0-3) - The local host (e.g. ControlLogix controller) passes these words to the 1756-SYNCH module in its local chassis. The module then transmits the data to the SynchLink fiber.
- Received Direct Words (0-3) - The 1756-SYNCH receives these words from the SynchLink fiber and copies the data back onto the fiber (via its transmit port) without any local host controller interaction with the data.
- Multiplier - This is the product of an upstream direct word and a user-configured multiplier for re-transmission to a downstream node. A typical application for this function would be for real time drawing applications where section-to-section speed ratios are required for precise process control.

Direct Words

Direct words are data delivered in a single message. These can be read from the module input data and sent to the module output data. A SynchLink message can contain a maximum of four direct data words; each word is 32 bits in length. Direct data can be automatically forwarded to the next SynchLink node in a daisy chain or ring configuration if necessary.

Multiplier

The Multiplier feature multiplies one Direct Word on the receive port by a user-defined value (0.5 to 2.0) before transmitting it out the transmit port. This feature is used to manipulate specific data from node to node. This feature is set during configuration. For the 1756-SYNCH module, you must configure the Multiplier in RSLogix 5000. For the 1756-DMxxx series modules and the PowerFlex 700S drives, you must set this feature in DriveExecutive in the DriveTools 2000 suite.

EXAMPLE A drawing application might use the Multiplier to modify data from section to section throughout the process.

Although you can configure the multiplier for any of the Direct Words, it can only be used with one Direct Word at a time.

The multiplier can only transmit the same word it received (i.e. this feature does not allow your module to receive direct word 0 and transmit it as direct word 1). The multiplier output is limited to 16 bits; any value generated by the multiplier larger than 65535 is truncated to 16 bits, and a Multiplier Overflow error is reported by the Synchlink module. Make sure any data that is passed to the Output word is less than 65535; if the data is greater, you receive incorrect output data.

Multiplier Overflow

The Multiplier Overflow bit is a data tag that is set whenever the multiplier value exceeds 65535. This value is set in the input data tags.

IMPORTANT

If you want to pass a Multiplier Overflow value (received from an upstream node) to a third node downstream but not locally change the direct word data transmitted to the downstream node, you must:

1. Enable the Multiplier feature
2. Use a Multiplier value = 1

If you perform these steps, data received from the upstream node on the Receive port is sent out through the Transmit port to the next downstream node. This process informs the downstream node that a Multiplier Overflow condition exists upstream and any data received is invalid.

Follow the steps described above for all SynchLink nodes in the system that need to know about the Multiplier Overflow condition. Figure 1.5 shows how a Multiplier Overflow condition is sent downstream.

Figure 1.5

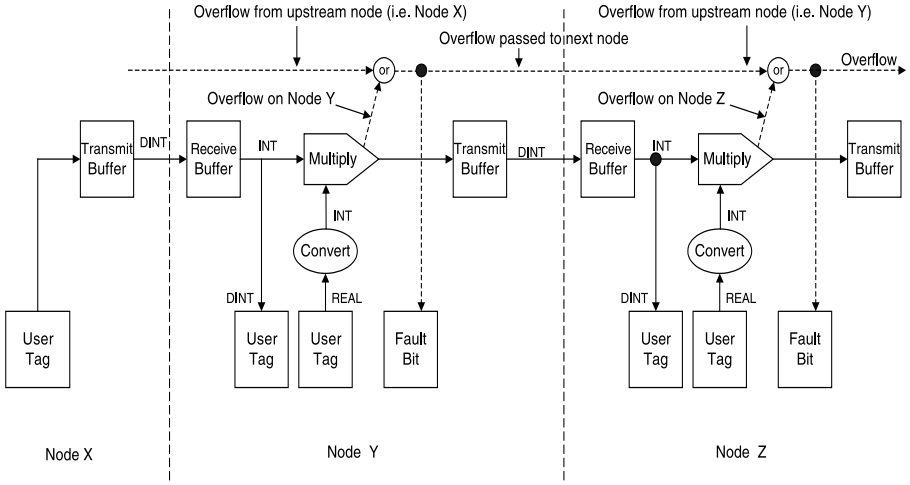

SynchLink Transmitted Axes

Before SynchLink became available, all coordinated motion axes had to be controlled from the same ControlLogix chassis. However, SynchLink allows you to coordinate axes between multiple chassis. The 1756-SYNCH module can consume up to two axes from a master chassis and broadcast the data to other chassis over SynchLink.

Slave chassis consume the broadcast axis data and redistribute it to their local motion planners (i.e. the Logix controller in their local chassis). The controller in the slave chassis must be configured to consume axis data from the local 1756-SYNCH module. With this configuration, you can control multiple axes synchronously throughout the system.

SynchLink is typically used by the 1756-SYNCH module for axis data and CST synchronization. The 1756-DMxxx series modules and the PowerFlex 700S products typically use SynchLink to pass drive data (via direct data or buffered data).

Chapter Summary

In this chapter you read about:

- what SynchLink is.
- what SynchLink is used for.

Chapter 2 explains the SynchLink Topologies.

SynchLink Topologies

This chapter provides a detailed description of the SynchLink topologies.

For information about:	See page:
Star Topology	2-2
Daisy Chain Topology	2-3
Ring Topology	2-4

SynchLink communications are a unidirectional data transfer from one SynchLink node to another. The physical arrangement of these nodes is called a topology. There are three SynchLink topology types:

- Star Topology
- Daisy Chain Topology
- Ring Topology

Each topology starts with a single master node. Each topology allows multiple configurations in the general topology. For example, the daisy chain topology (described on page 2-3) starts at a master node, ends at an end node.

This section discusses the issues associated with general SynchLink topologies. For information on specific configurations using specific products that are available in each topology, see Chapter 4, Specific SynchLink Configurations.

IMPORTANT This section describes the physical set-up of each topology. In addition to the physical arrangement, you must electronically configure the devices.

- For the ControlLogix SynchLink module, you must use RSLogix 5000 to configure SynchLink.
- For the ControlLogix Drive modules and the PowerFlex 700S drives, you must use DriveExecutive in the DriveTools 2000 suite to configure SynchLink.

Star Topology

In the SynchLink star topology, a hub is placed in the physical center of the link. The hub acts as a multi-port repeater that contains one receive port and up to 16 transmit ports. The master node transmitter is connected to the hub receive port.

Nodes are connected to the hub (via direct, dedicated lines) like points on a star. Each of the 16 transmit ports on the hub can be connected to a single node, including one other layer of hubs, as shown in Figure 2.1.

Figure 2.1

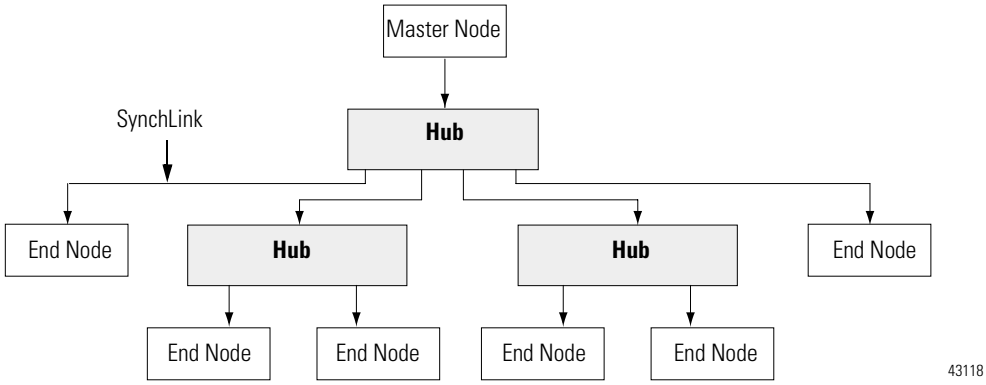

In this topology, the master node transmitter and end node receivers are not physically connected. Instead, messages are transmitted by the master node to the hub and then are retransmitted by the hub to all end nodes.

The star topology supports up to 2 layers of hubs with up to 16 end nodes connected to each hub. A maximum of 257 SynchLink nodes (including the master node) can be connected in this topology.

The **advantages** to using the star topology are:

- Cabling is easier to install and maintain.
- If a node fails, is powered down, or disconnected from the hub, it is the only node affected, unless it is the master node.
- Faults are easier to locate and isolate.

The **disadvantages** to using the star topology are:

- A hub is a single-point of failure.
- Data cannot be passed from slave to slave.

For more information on the configurations available in the star topology, see page 4-6.

Daisy Chain Topology

In the daisy chain topology, the SynchLink system starts at the master node and ends at an end node but may also include center nodes that receive and transmit data; the only difference between center and end nodes is their physical location. You can use a **maximum of 10 nodes**, including the master node, with this topology.

Figure 2.2

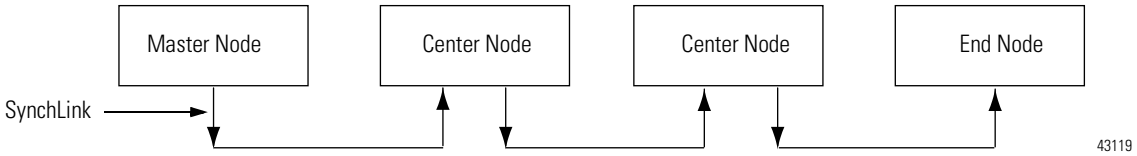

In this topology, time synchronization occurs according to the following rules.

- Each node, except for the master node, enables its transmitter immediately after it has received the first message from the upstream node.
- Each node can generate and transmit the beacon signal regardless of whether it has received one or not.
- Each node is a time slave of its upstream node and will attempt to synchronize with it.

The master node must be set as the SynchLink Time Master. Its node clock is the SynchLink system clock. After power-up, the Master node begins to transmit a beacon message every 50µS. As soon as the downstream node receives the first beacon message, it starts to synchronize its node clock with the master node clock and begins to send messages to its downstream node. Eventually, this process propagates down the daisy chain until all nodes are synchronized with the master.

The **advantages** to using the daisy chain topology are:

- The topology does not require a hub and is easier to install.
- Data moving downstream can be modified from node to node.

The **disadvantage** to using the daisy chain topology are:

- A single node failure brings down the link, unless bypass blocks are used. For more information on bypass blocks, see page 3-8.
- It is more difficult to troubleshoot.
- Axis and buffered data cannot be passed through without intervention from the local host controller, requiring additional time.

For more information on the configurations available in the daisy chain topology, see page 4-9.

Ring Topology

The ring topology is a permutation of the daisy chain configuration. In the ring topology, the end node's transmitter is connected to the master node's receiver. This topology can include center nodes; the only difference between the center and end nodes is their physical location. You can use a **maximum of 10 nodes**, including the master node, with this topology.

Figure 2.3

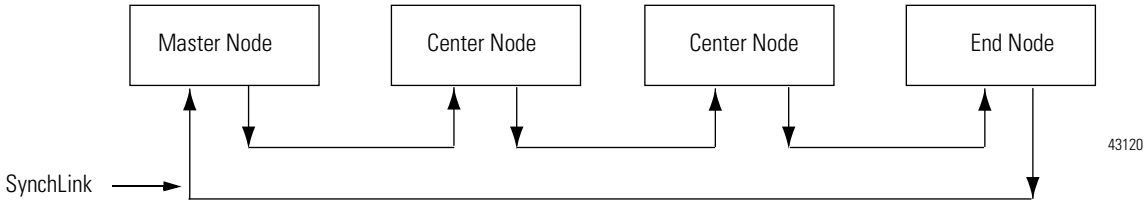

The **advantages** to using the ring topology are:

- The topology does not require a hub.
- Data moving downstream can be modified from node to node.
- Data can be passed back to the master.

The **disadvantage** to using the ring topology are:

- A single node failure brings down the entire link.
- It is more difficult to troubleshoot.
- Axis and buffered data cannot be passed through without intervention from the local host controller, requiring additional time.

For more information on the configurations available in the ring topology, see page 4-13.

Chapter Summary

In this chapter you read more about SynchLink topologies.

Chapter 3 describes Using Specific Products on SynchLink.

Using Specific Products on SynchLink

This chapter describes the products that can be used on SynchLink.

For information about:	See page:
ControlLogix SynchLink Module (1756-SYNCH)	3-1
ControlLogix Drive Modules (1756-DMxxx Series)	3-3
PowerFlex 700S Drive	3-5
Connecting Products to SynchLink	3-7
Configuring Products for Use on SynchLink	3-11

ControlLogix SynchLink Module (1756-SYNCH)

A ControlLogix SynchLink module resides in a ControlLogix chassis and connects the chassis to SynchLink. You can use this module to implement:

- time synchronization
- distributed motion control
- coordinated drive control

based on the ControlLogix and PowerFlex 700S platforms. In a distributed control system, the SynchLink module broadcasts reference data and synchronizes time from a single ControlLogix chassis to multiple other chassis at a high speed.

Transferring Data With the SynchLink Module

The SynchLink module transfers multiple types of reference data between chassis, including:

- Direct - Data delivered in a single message. A SynchLink message can contain a maximum of four direct data words; each word is 32 bits in length. Direct data can be automatically forwarded to the next node in daisy chain or ring configurations.
- Buffered - Data that exceeds the four word limit of a direct data transfer. Buffered data is appropriately segmented at the transmitting device and reassembled at the receiving device. Buffered data cannot be automatically forwarded to the next SynchLink node in the daisy chain or ring configurations. In this case, transferring buffered data to the next node requires intervention by the host controller.
- Axis data - Motion data used by the motion planner in the controller. The 1756-SYNCH module can consume an Axis tag from a controller and pass it over SynchLink or it can consume an Axis tag received over SynchLink and reproduce it for the local controller to consume. Axis data is not automatically forwarded to the next node in daisy chain or ring configurations.

ControlLogix SynchLink Module Features

The SynchLink module offers the following features:

- Communication of remote axis data in a timely and deterministic manner
- Communication of direct and buffered data
- Synchronization of CST and SynchLink clocks in the system
- Removal and insertion under power (RIUP) - Allows you to remove and insert the module while power is applied.
- Class I Division 2, UL, CSA, and CE Agency Certification

Related Documents

For more information on the ControlLogix SynchLink module (1756-SYNCH), including a full description of all features and of how to electronically configure the module, see the following publications:

- ControlLogix SynchLink Module installation instructions, publication 1756-IN579
- ControlLogix SynchLink Module user manual, publication 1756-UM521

ControlLogix Drive Modules (1756-DMxxx Series)

The 1756-DM Drive Module is a single slot ControlLogix-based module for interface to Reliance Electric Distributed Power System (DPS) drive equipment. Each drive module interfaces with an individual Power Module Interface (PMI) chassis, performing velocity, position, and torque control.

There are six types of drive modules, one for each type of DPS drive equipment. Table 3.1 lists the ControlLogix Drive modules.

Table 3.1
ControlLogix (1756-DMxxx Series) Drive Modules

Drive Module:	DPS Equipment:	Description:
1756-DMD30	SD3000 6 Pulse	DC Drive S6 and S6R
	SD3000 12 Pulse	DC Drive S12 and S12R
1756-DMF30	SF3000	Three Phase Field Supply
1756-DMA30 (Not released as of this publication date)	SA3000	AC Drive
	SA3000 Parallel Inverters	AC Parallel Drive
1756-DMA50 (Not released as of this publication date)	SA500	Servo Drive
1756-DMB30 (Not released as of this publication date)	SB3000	DC Bus Supply
1756-DMA31	SA3100	AC Drive

Interface to Distributed Power System Drive Equipment

The first function of the Drive module is to interface to Reliance Electric Distributed Power System (DPS) drive equipment, enabling control of the drive equipment from a ControlLogix chassis. A ControlLogix controller performs higher level control algorithms and drive coordination. The Drive module performs outer control loop processing, and the Power Module Interface (PMI) controller performs real-time control of the Power Module.

Each drive module interfaces with an individual Power Module Interface (PMI) chassis. It resides in a ControlLogix chassis and connects to a PMI chassis via a fiber-optic Drive Communication cable. This communication protocol is the same protocol used by a Universal Drive Controller (UDC) (in an AutoMax environment) to interface to a PMI controller.

Transferring Data With the Drive Modules

The Drive modules transfer two types of data:

- Direct - Data delivered in a single message. A SynchLink message can contain a maximum of four direct data words; each word is 32 bits in length. Direct data can be automatically forwarded to the next SynchLink node in the daisy chain or ring configurations.
- Buffered - Data that exceeds the four word limit of a direct data transfer. Buffered data is appropriately segmented at the transmitting device and reassembled at the receiving device. Buffered data cannot be automatically forwarded to the next SynchLink node in the daisy chain and ring configurations.
- Axis data - Not supported by 1756-DMxxx Series modules.

ControlLogix Drive Module Features

The Drive module offers the following features:

- Velocity, position, and torque control
- Control loops are not synchronized to SynchLink through on-board connections. The 1756-SYNCH module is required to synchronize the Drive module to SynchLink.
- Motor Control capability for the respective Reliance Electric Distributed Power drive
- Fiber optic connection to the Power Module Interface
- Time synchronization of the SynchLink node clocks
- Removal and insertion under power (RIUP) - Allows you to remove and insert the module while power is applied
- Class I Division 2, UL, CSA, and CE Agency Certification

Related Documents

For more information on the ControlLogix Drive modules (1756-DMxx Series), including a full description of all features and how to electronically configure the module, see the following publications:

- ControlLogix Drive Modules installation instructions, publication 1756-IN577
- ControlLogix Drive Modules user manual, publication 1756-UM522

PowerFlex 700S Drive

The PowerFlex 700S is a highly functional, cost-effective and flexible drive control. The drive offers:

- selectable, high performance motor control algorithms.
- velocity, position and torque control
- control loops synchronized to SynchLink
- an array of feedback options, including encoder, resolver and high resolution encoder to optimize the accuracy of speed and position regulators.
- on-board high performance I/O.
- SynchLink as a high performance, high speed, drive-to-drive link that synchronizes the drives and transmits application data.

Transferring Data With the PowerFlex 700S Drives

The PowerFlex 700S Drives transfer two types of data between drives, including:

- Direct - Data delivered in a single message. A SynchLink message can contain a maximum of four direct data words; each word is 32 bits in length. Direct data can be automatically forwarded to the next SynchLink node in the daisy chain or ring configurations.
- Buffered - Data that exceeds the four word limit of a direct data transfer. Buffered data is appropriately segmented at the transmitting device and reassembled at the receiving device. Buffered data cannot be automatically forwarded to the next SynchLink node in the daisy chain and ring configurations.
- Axis data - Not supported by the PowerFlex 700S drives.

PowerFlex 700S Drive Features

The PowerFlex 700S drive offers the following features:

- Adaptive, field-oriented control FOC maintains torque control accuracy without external motor sensors
- Inertia compensation reduces dynamic tracking errors
- Adjustable backlash compensation for both feedback and forward signal paths
- Registration Inputs for Time or Position
- Resonant Frequency Compensation
- S-Ramp and Lead-Lag Filters for Velocity Signal Conditioning of user inputs
- Automatic Speed Feedback Loss/Recovery
- Coarse to Fine Interpolation for position applications
- Current Limit, Process Trim, Slip Compensation
- Electronic Gear Ratio

Related Documents

For more information on the PowerFlex 700S Drives, including a full description of all features and how to electronically configure the module, see the following publications:

- PowerFlex 700S Drives user manual, publication 20D-UM001

Connecting Products to SynchLink

The ControlLogix SynchLink module, ControlLogix Drive modules and PowerFlex 700S drives connect to SynchLink through special SynchLink fiber optic cables and other components, such as base blocks, splitter blocks and bypass switch blocks.

SynchLink Hub

The SynchLink hub is a modular fiber repeater containing base and splitter blocks, as shown in Figure 3.1. The base block (1751-SLBA) converts optical signals coming from a SynchLink node to electrical signals, and then retimes and retransmits them simultaneously to a maximum of four 4-port splitter blocks. The base block requires 24V dc. It supplies power to the splitter blocks.

The 4-port splitter block (1751-SL4SP) converts electrical signals coming from the base block to optical signals and retransmits them simultaneously through four output ports. Up to four splitter blocks can be mounted on a DIN rail and plugged together with one base block.

Figure 3.1

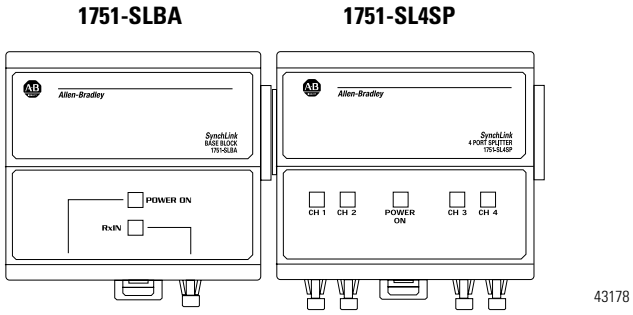

SynchLink Hub Wiring Diagram

Figure 3.2 shows how to wire a SynchLink hub.

Figure 3.2

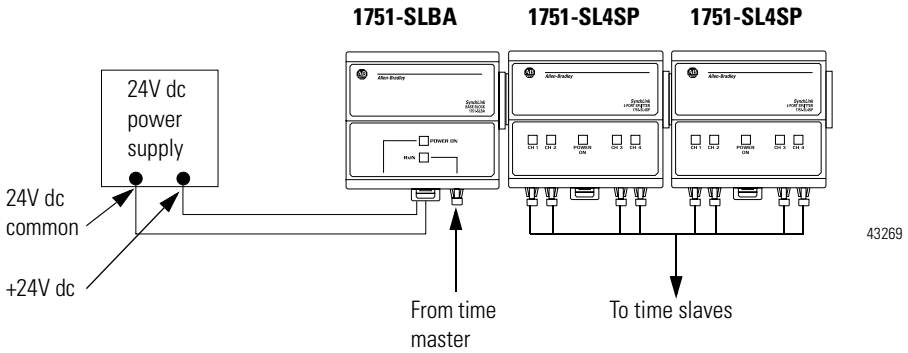

SynchLink Bypass Switch Block

The SynchLink bypass switch block (1751-SLBP) is a DIN-rail mounted block that is used in daisy chain and ring configurations where a node, or group of nodes, needs to be temporarily disconnected from SynchLink without physical reconfiguration of the cable system. The bypass switch block requires 24V dc.

Figure 3.3 - Components of the bypass switch block

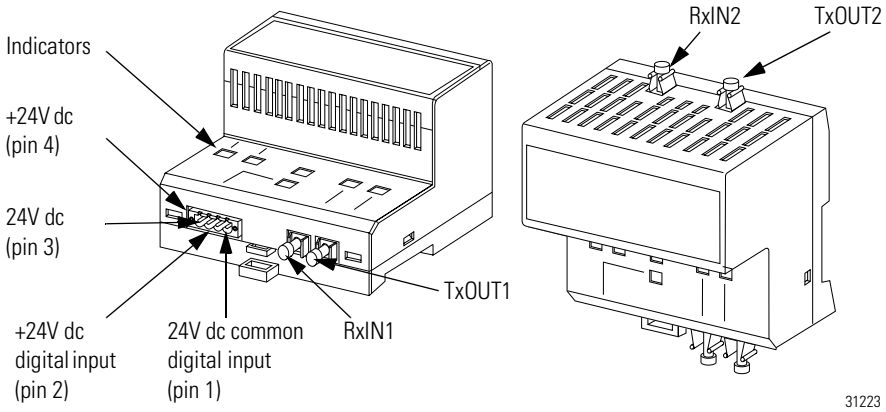

The bypass switch block has two modes of operation, pass-through and bypass. The operational mode is determined by the state of the 24V dc digital input that is driven by the local SynchLink station.

The pass-through mode is entered when the digital input is ON. In this mode, optical signals from the upstream station are received at the receiver port RxIN1 and retransmitted to the local station via the transmitter port TxOUT2. Optical signals generated by the local station are received at the receiver port RxIN2 and retransmitted to the downstream station via the transmitter port TxOUT1. There is no re-timing or signal regeneration in this mode.

The bypass mode is entered when the digital input is OFF. In this mode, signals received from the upstream station at the port RxIN1 are converted to electrical signals, re-timed, and retransmitted to the downstream station via the port TxOUT1.

The bypass switch block has no capabilities to detect or correct communication error conditions that may exist during the course of pass-through or bypass operation. The bypass switch block has no ability to report any abnormal conditions to the local station.

IMPORTANT

The Bypass Switch should be applied as a SynchLink patch when a local node needs to be powered down as a result of equipment reconfiguration (e.g. in order to manufacture a variety of products on the same process line) or a failure. It should not be applied for dynamic switching between Pass Through and Bypass modes; this may result in the loss of time synchronization between nodes and the loss of data transferred between them.

While the main point to remember is that bypass switch should not be applied dynamically (i.e. while power is applied), there are other uses for the bypass switch (to be used in a powered down environment), including:

- change topology configuration
- change masters in a topology

SynchLink Bypass Wiring Diagram

Figure 3.4 shows how to wire a SynchLink hub.

Figure 3.4

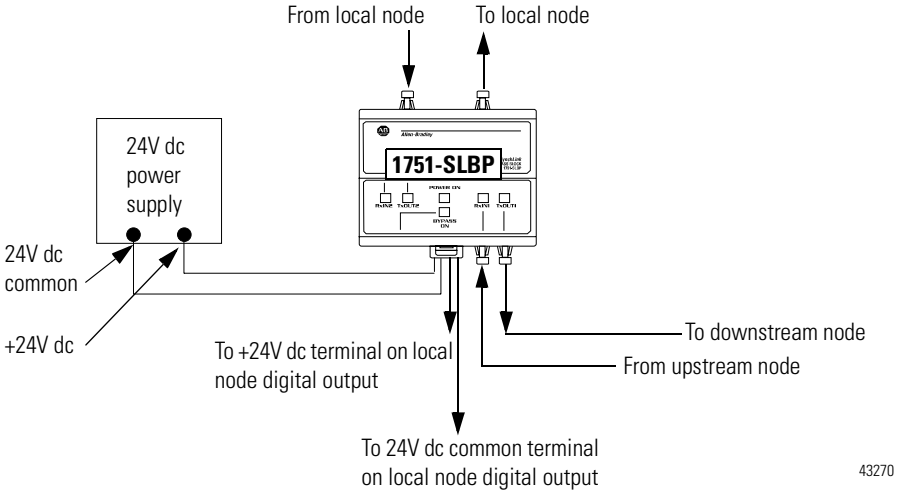

Fiber Optic Cables

The SynchLink fiber optic cable assemblies are manufactured from 200/230 micron/simplex cable with a Versalink (V-Link) V-pin connectors at the ends. For a list of cable assembly specifications, see Table 3.2. For a complete list of SynchLink fiber optic cable system products, see Table 7.1 on page 7-2.

ATTENTION

- Never look into a transmitter's output or the end of a cable with an active transmitter connected.
- Do not look directly into the fiber ports. Light levels may cause damage to your eyesight.
- Never use a microscope to view an active cable system. The concentration of light from the microscope could cause permanent damage to your eye. SynchLink products are Class 1 LED products.

Table 3.2
Fiber Optic Cable Assemblies Specifications

Cable Segment Length	300m maximum[1]
	1m minimum
Cable Splicing	Not permitted
Operating Wavelength	650nm (red) nominal
Cable Attenuation	12 dB/km maximum at 650nm

(1) The maximum cable length is calculated differently, depending on topology. For more information, see page 7-4.

For a full description of how to plan, install and troubleshoot a SynchLink system, including connecting these products, see Chapter 5 through Chapter 9.

Configuring Products for Use on SynchLink

You must electronically (i.e. via software) configure the devices in each set-up.

- For the ControlLogix SynchLink module, you must use RSLogix 5000 to configure SynchLink.

  For more information on how to use RSLogix 5000 to configure your 1756-SYNCH module, see the ControlLogix SynchLink Module user manual, publication 1756-UM521.

- For the ControlLogix Drive modules and the PowerFlex 700S drives, you must use DriveExecutive in the DriveTools 2000 suite to configure SynchLink.

  For more information on how to use DriveExecutive to configure your 1756-DMxxx Series modules, see the ControlLogix Drive Module user manual, publication 1756-UM522.

  For more information on how to use DriveExecutive to configure your PowerFlex 700S drives, see the High Performance AC Drive PowerFlex 700S drives user manual, publication 20D-UM001.

Chapter Summary

In this chapter, you read about the products that can be used on SynchLink, including:

- ControlLogix SynchLink Module (1756-SYNCH)
- ControlLogix Drive Modules (1756-DMxxx Series)
- PowerFlex 700S Drive

Chapter 4 explains the Specific SynchLink Configurations.

Notes:

Specific SynchLink Configurations

This chapter describes the configurations available with each topology. The configurations listed in this chapter were tested and approved. If you plan to use another configuration, contact Rockwell Automation first.

For information about:	See page:
SynchLink Functionality in Each Device	4-2
Star Topology Configurations	4-6
Daisy Chain Topology Configurations	4-9
Ring Topology Configurations	4-13

Difference Between Topologies and Configurations

Chapter 2 describes the SynchLink Topologies as the physical arrangement of SynchLink nodes. This chapter is more specific about the products used in each topology (e.g. PowerFlex 700S drives in a daisy chain topology).

This chapter explains how to use each configuration and provides a better understanding of why the capabilities of each SynchLink devices must be considered when planning your application.

For example, a PowerFlex 700S drive can pass buffered or direct data but not axis data to another SynchLink node. If you need to transfer axis data, you cannot use any configuration with PowerFlex 700S drives.

Before you read about specific configurations, however, you should understand how the various devices use SynchLink; not all of the products that use Synchlink use it the same way. Refer to SynchLink Functionality in Each Device on page 4-2 for a better understanding of how the various devices use SynchLink.

SynchLink Functionality in Each Device

Table 4.1 gives a summary of the various levels of functionality for the devices that use SynchLink. More detailed descriptions of each level of functionality follow the table.

Table 4.1
SynchLink Functionality in SynchLink Devices

Device:	SynchLink Node Clock:	Coordinated System Time:	CST/SynchLink Time Relay:	Axis Support:	Synchronize to Host Processor:
1756-SYNCH	✓	✓	✓	✓	
1756-DMxxx	✓	✓(1)			
PowerFlex 700S	✓				✓

(1) The 1756-DMxxx series drive modules cannot set the CST on a ControlLogix backplane.

1756-SYNCH Module

SynchLink Node Clock

The 1756-SYNCH module employs the SynchLink node clock, allowing the module to be the SynchLink time master or a SynchLink time slave; in this way, the module can either set time on the fiber, or, receive time from the fiber.

Coordinated System Time

In addition to setting and receiving time on the SynchLink fiber, the 1756-SYNCH module can also set or receive Coordinated System Time (CST) data. The CST clock is the main time reference on a ControlLogix backplane. Many 1756 I/O modules use the CST to take snapshots of real-time samples, and controllers use it to execute motion control instructions. Because a SynchLink module can act as CST master and broadcast CST time reference information to SynchLink modules in the other chassis, an entire ControlLogix system can be synchronized, allowing for relevant timestamping of data and distributed, synchronized motion control.

CST/SynchLink Time Relay

A time relay is any device that passes a time reference along. The 1756-SYNCH module passes the CST reference in the master chassis from the chassis backplane to the fiber optic media. Slave nodes in other chassis receive the CST reference value from the media, and relay the value to their respective backplanes. In this manner, although the SynchLink modules in the slave chassis are configured as slaves on the SynchLink fiber, they are configured as masters in their chassis, establishing the received CST value as the master reference for that chassis. Thus, all chassis that use the 1756-SYNCH module can be synchronized to the same CST reference.

Axis Support

The 1756-SYNCH module can transmit and receive axis data types that are used in the motion engine (of the local controller) to produce motion profiles. Since the motion planner uses the CST clock as its main time reference, all devices that consume motion axis data information from a motion master must also use the same time reference to interpolate the motion data in a meaningful way. This is true both inside a single chassis as well as among a distributed system where multiple chassis are using the same data.

IMPORTANT Keep in mind that a 1756-SYNCH module should never follow a PowerFlex 700S drive in any SynchLink configuration.

1756-DMxxx Drive Modules

SynchLink Node Clock

The 1756-DMxxx drive modules employ the SynchLink node clock, allowing the modules to be the SynchLink time master or a SynchLink time slave; in this way, the module can either set time on the fiber, or, receive time from the fiber. The 1756-DMxxx drive modules also implement the VPLs used in the PowerFlex 700S drives.

Coordinated System Time

The 1756-DMxxx drive modules use the CST differently than the 1756-SYNCH module. You should be aware of two significant differences before implementing these modules in a control scheme.

First, the 1756-DMxxx drive modules are intelligent processing modules that regulate Reliance Electric Distributed Power type drives. Each 1756-DMxxx drive module has integrated Velocity and Position Loops (VPL) that are a part of the module's firmware for controlling the drives. As with any digital control scheme, the control loops are scanned on a periodic basis, as measured against a given clock in the system. In the case of the 1756-DMxxx drive modules, the clocking mechanism is the CST clock on the ControlLogix backplane.

Since the 1756-DMxxx modules use the CST clock, as multiple modules are placed in a single chassis, their VPLs are automatically synchronized because they share the same clock.

CST/ SynchLink Time Relay

The second difference between the 1756-SYNCH and the 1756-DMxxx drive modules is that the 1756-DMxxx drive modules do not act as time relays. With this module, the SynchLink connection is for high speed data transfer only. This also means that if a distributed drive control system is installed where there are multiple 1756-DMxxx drive modules distributed across multiple chassis, 1756-SYNCH modules must also be installed in those chassis if tight synchronization between drives is important from chassis to chassis.

Axis Support

The 1756-DMxxx drive modules do not support the motion engine or profiler. They do not produce or consume axis data. They cannot be configured with communications protocols which include axis data types.

PowerFlex 700S Drive

SynchLink Node Clock

The PowerFlex 700S drive employs the SynchLink node clock, allowing the drive to be the SynchLink time master or a SynchLink time slave; in this way, the drive can either set time on the fiber, or, receive time from the fiber.

One difference in the implementation, though, is that while the 1756-DMxxx drive modules use CST as the synchronizing mechanism to coordinate VPL execution among multiple 1756-DMxxx drive modules, the PowerFlex 700S drive uses the SynchLink node clock to coordinate VPL execution among the distributed drives. The reason for this difference in synchronizing mechanisms is that most applications using the 1756-DMxxx drive modules are likely to coordinate multiple drives out of a single chassis, while the PowerFlex 700S is inherently distributed in its architecture.

Coordinated System Time

The PowerFlex 700S drive does not implement or utilize the Coordinated System Time clock.

CST/ SynchLink Time Relay

The PowerFlex 700S drive does not support any notion of a CST / SynchLink time relay, since it does not support a CST clock.

Axis Support

The PowerFlex 700S drive does not support the motion engine or profiler. It does not produce or consume axis data. It cannot be configured with communications protocols which include axis data types.

IMPORTANT Keep in mind that a PowerFlex 700S drive should never precede a 1756-SYNCH module in any SynchLink configuration.

Star Topology Configurations

In the star topology, a hub is placed in the physical center of the link. The hub acts as a multi-port repeater that contains one receive port and up to 16 transmit ports. The master node transmitter is connected to the hub receive port. Nodes are connected to the hub (via direct, dedicated lines) like points on a star.

Star Topology Configuration #1

In this configuration, ControlLogix SynchLink modules (1756-SYNCH) are the master node and end nodes.

Figure 4.1

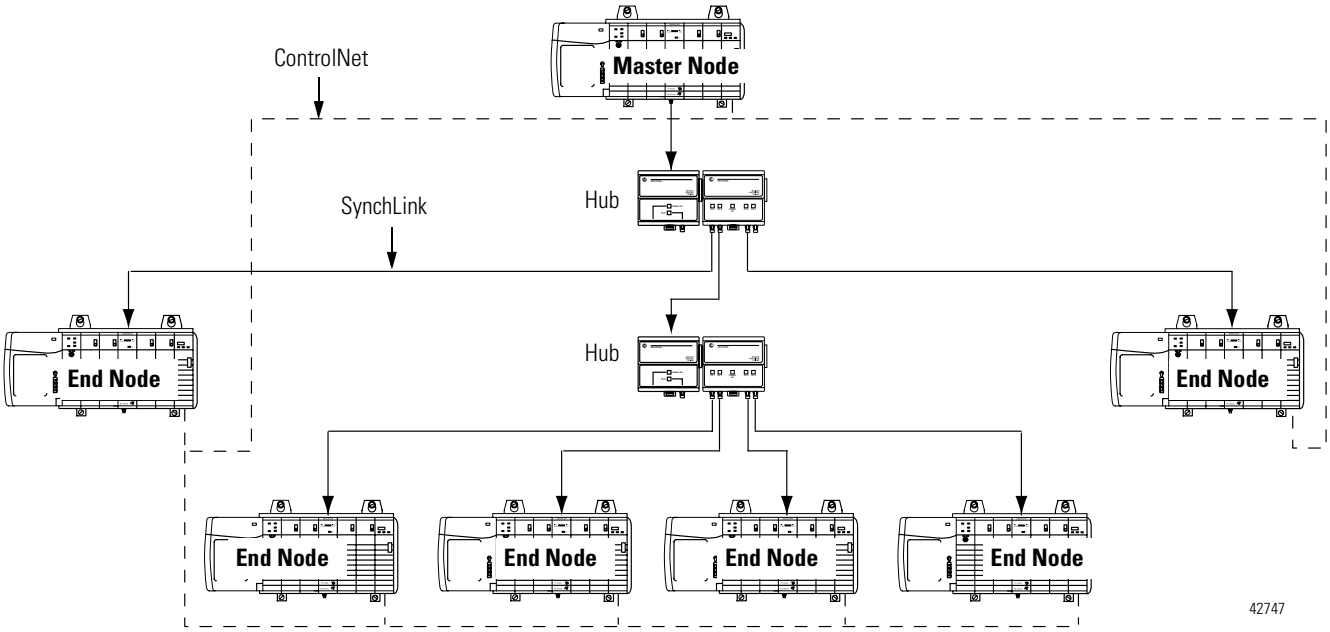

Table 4.2 lists more information about this configuration.

Table 4.2

Category:	Explanation:
Time synchronization	Master - 1756-SYNCH module Slaves - 1756-SYNCH modules The SynchLink node clocks and the CST clocks are synchronized across all nodes.
Data transfer	• Typically, this configuration is used to transfer axis data. • Direct and buffered data can also be used in this configuration. However, direct data does not off any benefit to the user because there is no data pass through in a star configuration as in a daisy chain configuration.
Restrictions	None
Typical applications	Motion control

Star Topology Configuration #2

In this configuration, a ControlLogix SynchLink module (1756-SYNCH) is the master node, and PowerFlex 700S drives are the end nodes.

Figure 4.2

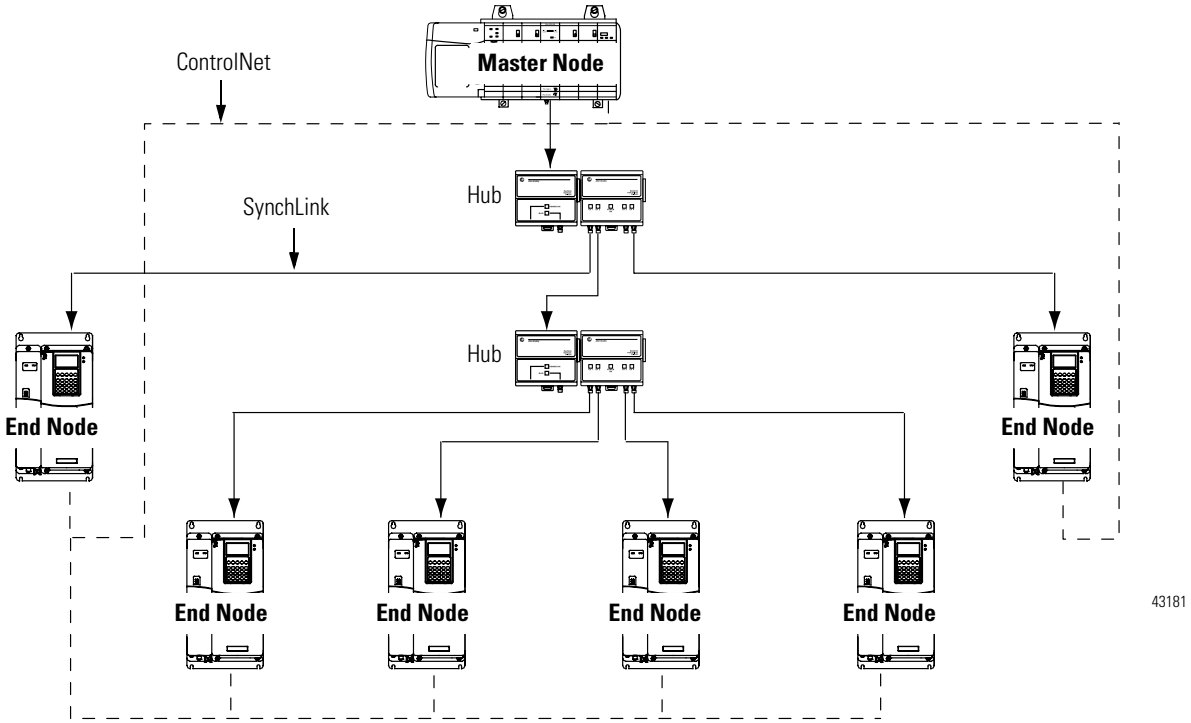

Table 4.3 lists more information about this configuration.

Table 4.3

Category:	Explanation:
Time synchronization	Master - 1756-SYNCH module Slaves - PowerFlex 700S drives The SynchLink time value is synchronized across all nodes. Also, all drive VPLs are synchronized.
Data transfer	Direct and buffered data can both be used in this configuration. However, direct data does not off any benefit to the user because there is no data pass through in a star configuration as in a daisy chain or ring configuration.
Restrictions	Axis data is not supported in the configuration.
Typical applications	Master Drive Reference Control

Star Topology Configuration #3

In this configuration, PowerFlex 700s drives are the master and end nodes.

Figure 4.3

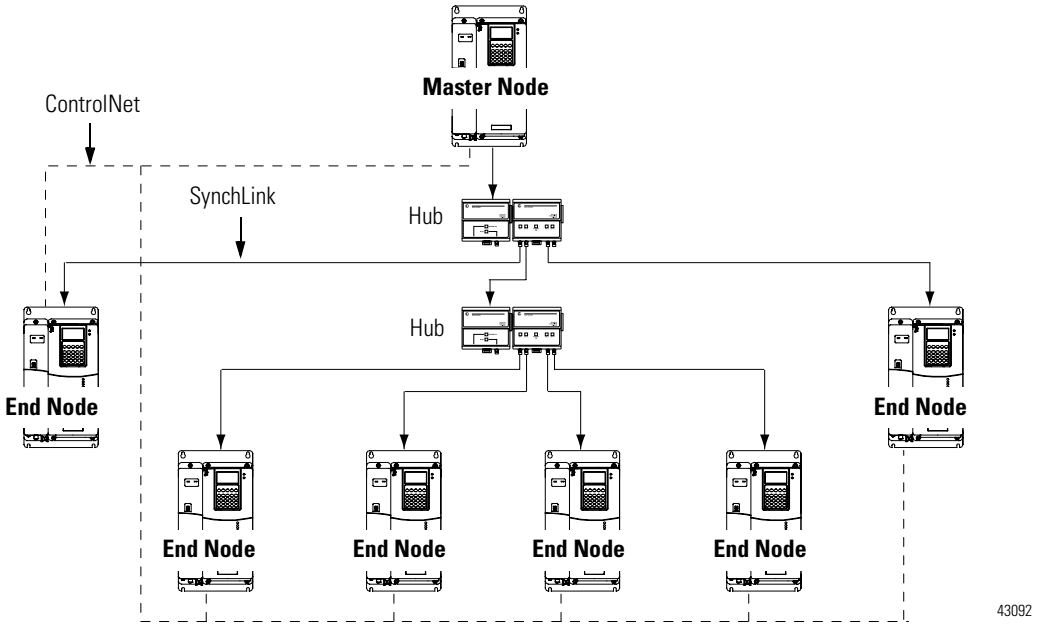

Table 4.4 lists more information about this configuration.

Table 4.4

Category:	Explanation:
Time synchronization	Master - PowerFlex 700S drives Slaves - PowerFlex 700S drives The SynchLink node clock and each drive's VPLs are synchronized across all nodes.
Data transfer	Direct and buffered data can both be used in this configuration. However, direct data does not off any benefit to the user because there is no data pass through in a star configuration as in a daisy chain or ring configuration.
Restrictions	Axis data is not supported in the configuration.
Typical applications	Master Drive Reference Control

Daisy Chain Topology Configurations

In the daisy chain topology, the SynchLink system starts at the master node and ends at an end node but may also include center nodes that receive and transmit data; the only difference between center and end nodes is their physical location.

Daisy Chain Topology Configuration #1

In this configuration, a ControlLogix SynchLink module is the master node, and ControlLogix SynchLink or Drive modules are the center and end nodes.

Figure 4.4

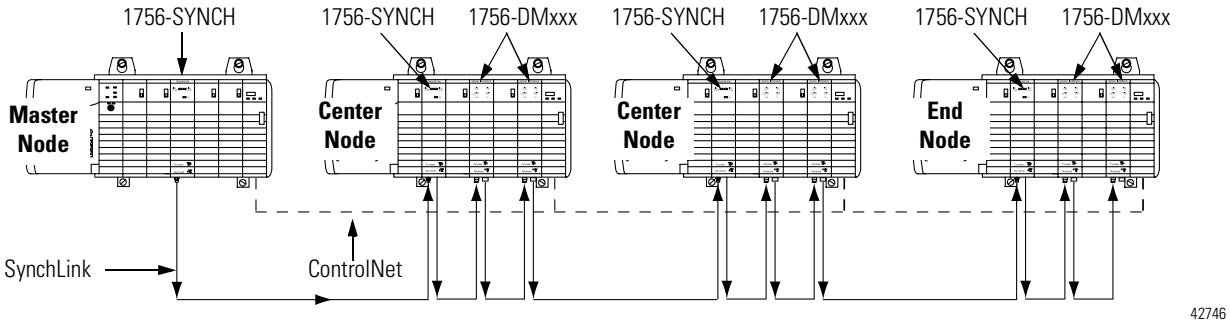

Table 4.5 lists more information about this configuration.

Table 4.5

Category:	Explanation:
Time synchronization	Master - 1756-SYNCH module Slaves - 1756-SYNCH modules and 1756-DMxxx series modules The SynchLink node clocks and the CST clocks are synchronized across all nodes. The VPL values are synchronized across all 1756-DMxxx series modules because the modules are synchronized by the respective CST values in each chassis.
Data transfer	• Typically, this configuration is used to transfer direct data. • If you want to pass buffered data, the local controller at each node must pass the data.(1)
Restrictions	• Axis data is not supported in the configuration. • A 1756-SYNCH module must be the time master. • A 1756-SYNCH module is required in each chassis to synchronize the CST. The Drive modules then synchronize their VPLs with the CST. • You can use a maximum of 10 SynchLink connections.
Typical applications	Multi-Section Drive Synchronization

(1) The local ControlLogix controller must move the buffered data for a 1756-SYNCH module. For the 1756-DMxxx module, the module's VPL microprocessor must move the data. For more information, see page 1-7.

Daisy Chain Topology Configuration #2

In this configuration, a ControlLogix SynchLink module is the master node, and ControlLogix SynchLink modules are the center and end nodes.

Figure 4.5

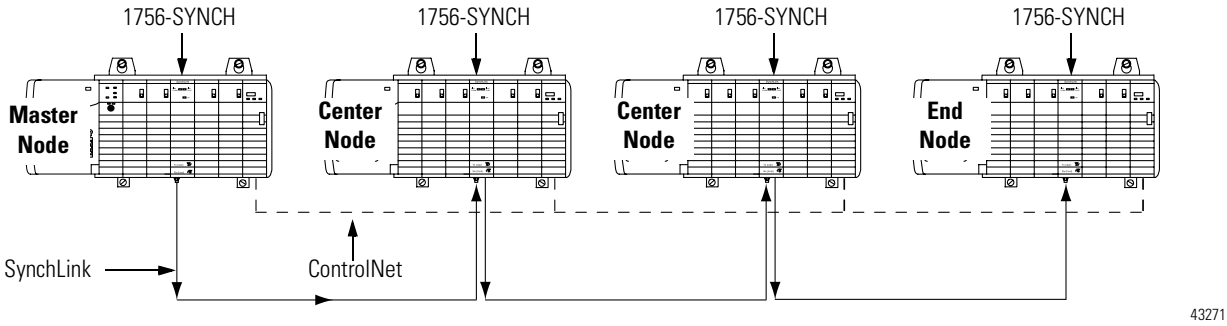

Table 4.5 lists more information about this configuration.

Table 4.6

Category:	Explanation:
Time synchronization	Master - 1756-SYNCH module Slaves - 1756-SYNCH modules The SynchLink node clocks and the CST clocks are synchronized across all nodes.
Data transfer	• Typically, this configuration is used to transfer direct data. • If you want to pass axis or buffered data, the local controller at each node must pass the data. Axis data cannot be passed quickly in this configuration.[1]
Restrictions	• A 1756-SYNCH module must be the time master. • A 1756-SYNCH module is required in each chassis to synchronize the CST. • You can use a maximum of 10 SynchLink connections.
Typical applications	Transfer Press

[1] The local ControlLogix controller must move the axis or buffered data. For more information, see page 1-7.

Daisy Chain Topology Configuration #3

In this configuration, the ControlLogix SynchLink module is the master node, and PowerFlex 700s drives are the center and end nodes.

Figure 4.6

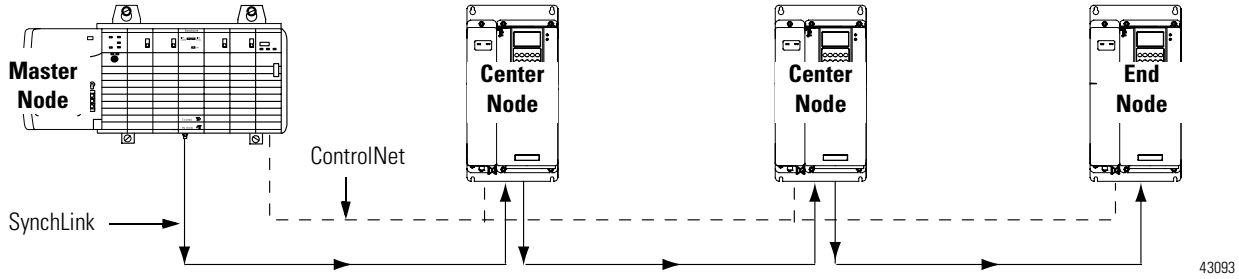

Table 4.7 lists more information about this configuration.

Table 4.7

Category:	Explanation:
Time synchronization	Master - 1756-SYNCH module Slaves - PowerFlex 700S drives The SynchLink time value is synchronized across all nodes.
Data transfer	• Typically, this configuration is used to transfer direct data. • If you want to pass buffered data, the local controller at each node must pass the data.[1] • Drive VPLs are synchronized to the SynchLink node clock.
Restrictions	• Axis data is not supported in this configuration. • The 1756-SYNCH module cannot be downstream from a PowerFlex 700S drive. • You can use a maximum of 10 SynchLink connections.
Typical applications	• Drawing application • Torque sharing application • Master reference generation

(1) The local ControlLogix controller must move the buffered data for a 1756-SYNCH module. For the PowerFlex 700S drives, the drive's VPL microprocessor must move the data. For more information, see page 1-7.

Daisy Chain Topology Configuration #4

In this configuration, PowerFlex 700s drives are the master, center and end nodes.

Figure 4.7

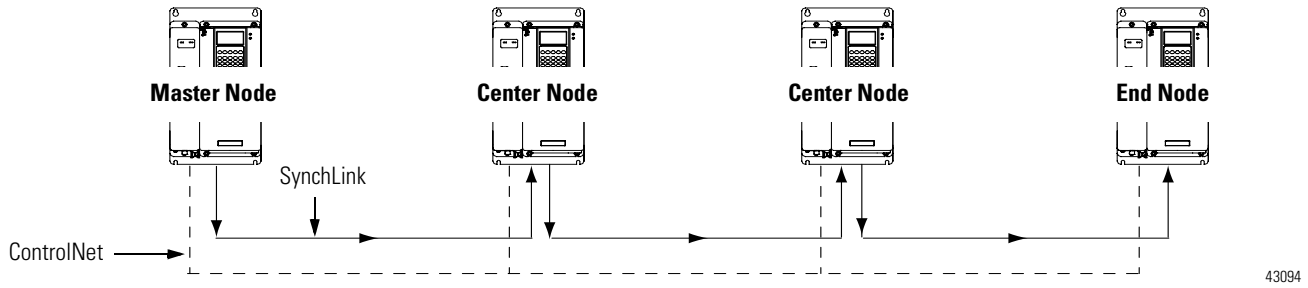

Table 4.8 lists more information about this configuration.

Table 4.8

Category:	Explanation:
Time synchronization	Master - PowerFlex 700S drive Slaves - PowerFlex 700S drives The SynchLink node clocks and the VPLs are synchronized across all nodes.
Data transfer	• Typically, this configuration is used to transfer direct data. • If you want to pass buffered data, the local controller at each node must pass the data.[1]
Restrictions	• Axis data is not supported in the configuration. • You can use a maximum of 10 SynchLink connections.
Typical applications	• Drawing application • Torque sharing application • Master reference generation

(1) For the PowerFlex 700S drives, the drive's VPL microprocessor must move the buffered data. For more information, see page 1-7.

Ring Topology Configurations

The ring topology is a permutation of the daisy chain configuration. In the ring topology, the end node's transmitter is connected to the master node's receiver. This topology can include center nodes; the only difference between the center and end nodes is their physical location.

Ring Topology Configuration #1

In this configuration, a ControlLogix SynchLink module is the master node, and ControlLogix SynchLink Drive modules are the center and end nodes.

Figure 4.8

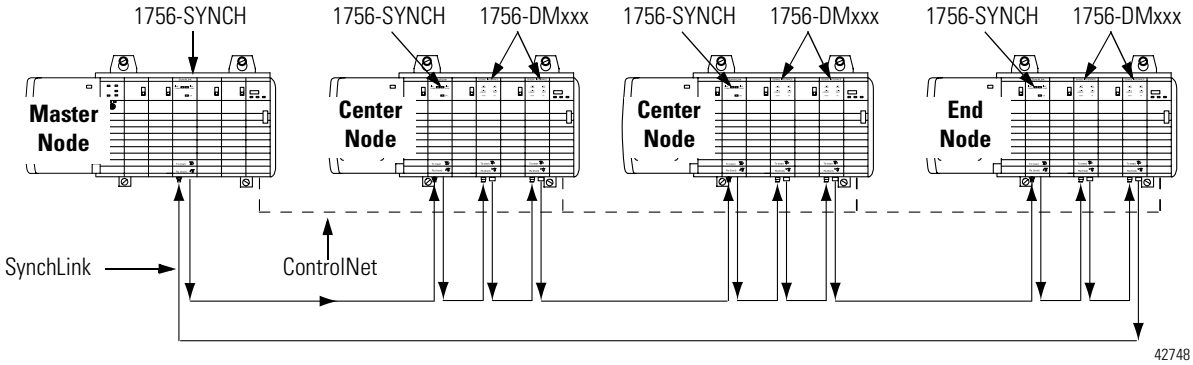

Table 4.9 lists more information about this configuration.

Table 4.9

Category:	Explanation:
Time synchronization	Master - 1756-SYNCH module Slaves - 1756-SYNCH modules and 1756-DMxxx series modules The SynchLink node clocks and the CST clocks are synchronized across all nodes. The VPL values are synchronized across all 1756-DMxxx series modules because the modules are synchronized by the respective CST values in each chassis.
Data transfer	• Typically, this configuration is used to transfer direct data. • If you want to pass buffered data, the local controller at each node must pass the data.[1] • Data can be passed back to the master node.
Restrictions	Axis data is not supported in the configuration.
Typical applications	Progressive draw

[1] The local Logix controller must move the buffered data for a 1756-SYNCH module. For the 1756-DMxxx module, the module's VPL microprocessor must move the data. For more information, see page 1-7.

Ring Topology Configuration #2

In this configuration, PowerFlex 700s drives are the master, center and end nodes.

Figure 4.9

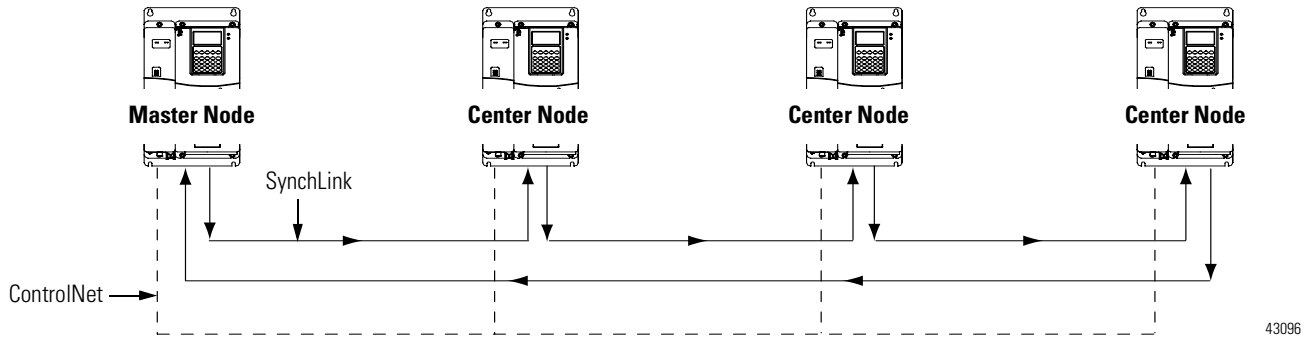

Table 4.10 lists more information about this configuration.

Table 4.10

Category:	Explanation:
Time synchronization	Master - PowerFlex 700S drives Slaves - PowerFlex 700S drives The SynchLink node clocks and the VPL clocks are synchronized across all nodes.
Data transfer	• Typically, this configuration is used to transfer direct data. • If you want to pass buffered data, the local controller at each node must pass the data.(1) • Data can be passed back to the master node.
Restrictions	Axis data is not supported in the configuration.
Typical applications	Draw

(1) For the PowerFlex 700S drives, the drive's VPL microprocessor must move the buffered data. For more information, see page 1-7.

Additional Configurations

Multiple SynchLink Connections in a Single Chassis

In this specialty configuration, ControlLogix SynchLink modules are master and end nodes. Multiple modules (located in the first two chassis after the hub) transfer data to the last chassis.

Figure 4.10

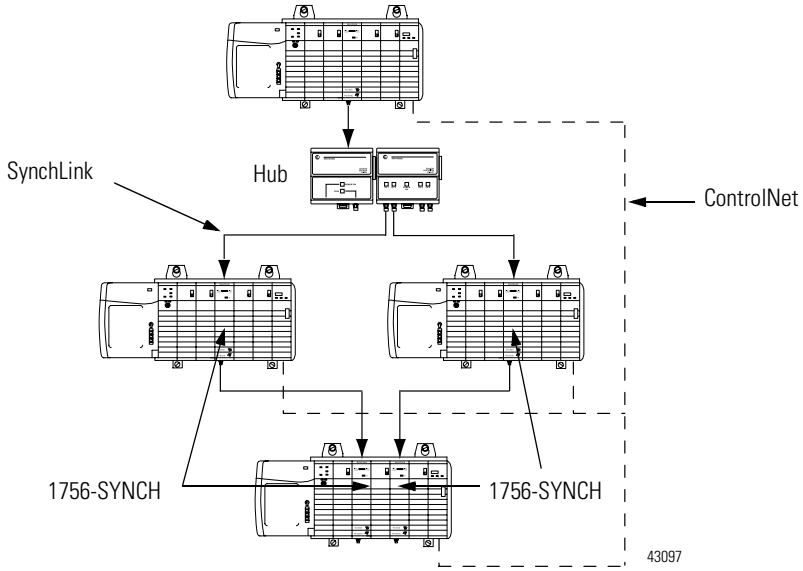

Table 4.11 lists more information about this configuration.

Table 4.11

Category:	Explanation:
Time synchronization	Master - 1756-SYNCH module Slaves - 1756-SYNCH modules The SynchLink node clocks and the CST clocks are synchronized across all nodes.
Data transfer	• Typically, this configuration is used to transfer axis or buffered data. • Only 1 1756-SYNCH module in the bottom chassis is configured as the CST master.
Restrictions	1 layer of hubs
Typical applications	• Web handling • Multi-Master Selection

Star/Daisy Chain Combination

When using this specialty configuration, you can transition from a star to a daisy chain configuration or from a daisy chain to a star configuration. The rules of star and daisy chain configurations apply to the individual portions. For more information on each, see page 2-2 (Star Topology) and page 2-3 (Daisy Chain Topology).

Figure 4.11

Star Topology Followed by Daisy Chain Topology

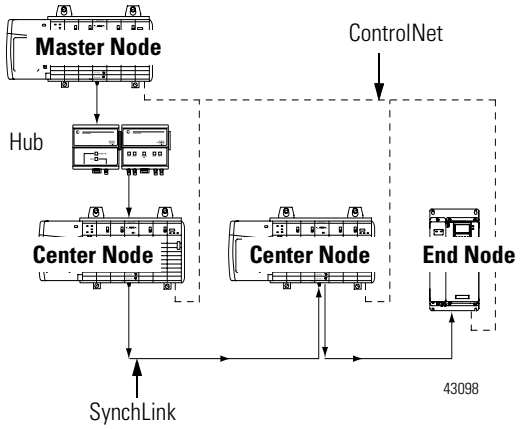

Daisy Chain Topology Followed by Star Topology

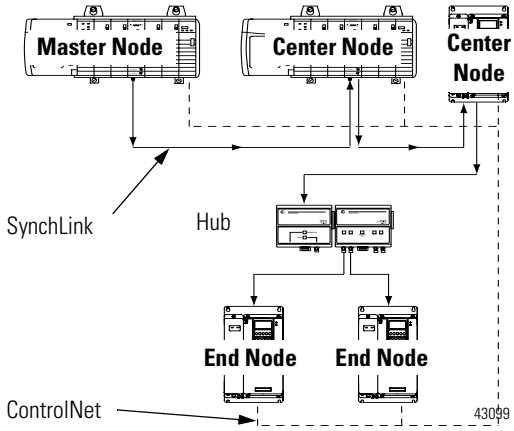

Table 4.12 lists more information about this configuration.

Table 4.12

Category:	Explanation:
Time synchronization	Master - 1756-SYNCH module Slaves - Multiple devices, depending on your application The SynchLink node clock is synchronized across all nodes. Depending on what other devices are included, you may achieve synchronization of CST clocks and VPLs as well.
Data transfer	Star portion only Direct and buffered data can both be used in this configuration. However, direct data does not offer any benefit to the user because there is no data pass through in a star configuration as in a daisy chain configuration. Daisy chain portion only To transfer axis or buffered data between nodes, the local controller at each node must pass the data.[1]
Restrictions	• You cannot transfer axis data with PowerFlex 700s drives or 1756-DMxxx series modules. • Only one transition between topology types (i.e. you cannot start with a star, transfer to a daisy chain and then transfer back to a star) • You cannot use the daisy chain portion in motion applications.
Typical applications	

[1] The local ControlLogix controller must move the axis or buffered data for a 1756-SYNCH module. For the 1756-DMxxx module or PowerFlex 700S drives, the device's VPL microprocessor must move the data. For more information, see page 1-7.

Drive Module Focus

In this configuration:

- SynchLink modules are required if you want to synchronize the Drive modules between chassis.
- Drive module SynchLink connections pass data and SynchLink node clock timing information. Drive modules synchronize their clocks to the CST reference on the ControlLogix backplane.

Figure 4.12

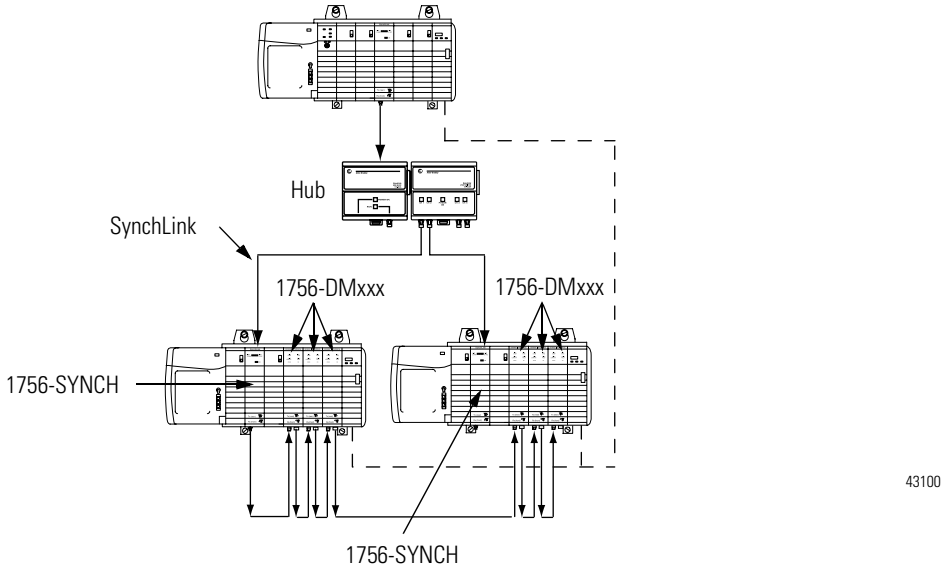

Table 4.13 lists more information about this configuration.

Table 4.13

Category:	Explanation:
Time synchronization	Master - 1756-SYNCH module Slaves - 1756-SYNCH modules and 1756-DMxxx series modules The CST clocks are synchronized across all chassis. The SynchLink node clocks are synchronized across all SynchLink nodes. The VPL values are synchronized across all 1756-DMxxx modules because the modules are synchronized by the respective CST values in each chassis.
Data transfer	• Typically, this configuration is used to transfer direct data. • If you want to pass buffered data, the local controller at each node must pass the data.[1]
Restrictions	• You can only transfer axis data between SynchLink modules. • You can use a maximum of 10 devices in any daisy chain portion of the system.

[1] The local ControlLogix controller must move the axis or buffered data for a 1756-SYNCH module. For the 1756-DMxxx module, the module's VPL microprocessor must move the data. For more information, see page 1-7.

Drive Module/PowerFlex 700s Drives Combination

In this configuration, a SynchLink module acts as a time relay and synchronizes the CST with the beacon to communicate data to the Drive modules and the PowerFlex 700s drives. The Drive modules use the CST to synchronize their VPLs, and the PowerFlex 700S drives use the SynchLink node clock to synchronize their VPLs.

Figure 4.13

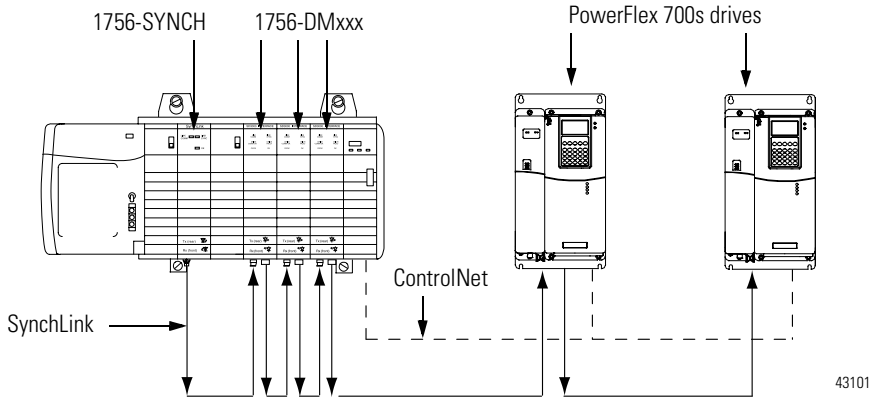

Table 4.14 lists more information about this configuration.

Table 4.14

Category:	Explanation:
Time synchronization	Master - 1756-SYNCH Slave - 1756-DMxxx series modules and PowerFlex 700S drives. The 1756-SYNCH module synchronizes the CST and SynchLink node clocks.
Data transfer	• Typically, this configuration is used to transfer direct data. • If you want to pass buffered data, the local controller at each node must pass the data.(1)
Restrictions	Axis data is not supported in the configuration.
Typical applications	Draw

(1) The local Logix controller must move the axis or buffered data for a 1756-SYNCH module. For the 1756-DMxxx module or PowerFlex 700S drives, the device's VPL microprocessor must move the data. For more information, see page 1-7.

Chapter Summary

In this chapter you read about SynchLink configurations.

Chapter 5 offers an Overview of the SynchLink Fiber Optic Cable System.

Overview of the SynchLink Fiber Optic Cable System

This chapter offers an overview of the SynchLink fiber optic cable system.

For more information about:	See page:
Applying the SynchLink System	5-2
Analyzing your SynchLink Application	5-2
Identifying System Components	5-4
Planning System Installation	5-4
Installing the System	5-4
Powering your System	5-5

IMPORTANT

To successfully apply the concepts and techniques in this manual, you must have a fundamental knowledge of electronics and electrical codes.

This manual describes cable installation inside a manufacturing facility. Other types of installations of the SynchLink are not permitted.

Figure 5.1 SynchLink Fiber Optic Cable System Example

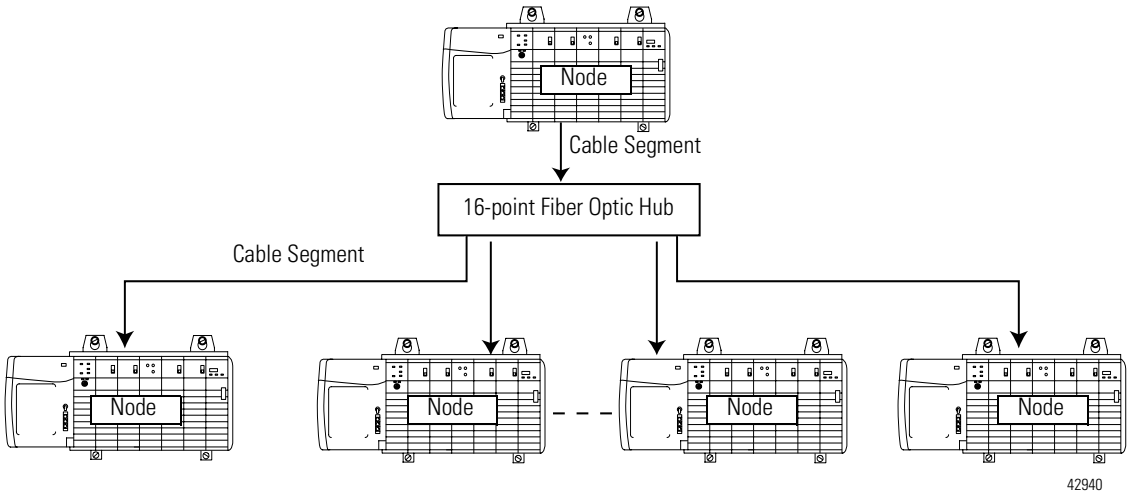

Applying the SynchLink System

The following steps outline how to apply the SynchLink fiber optic cable system.

IMPORTANT If you are going to use fiber optic cable in an intrinsically safe area, consult with your local safety coordinator.

1. **Analyze** your SynchLink application and choose a SynchLink topology.
2. **Identify** the fiber optic cable components that your SynchLink application requires.
3. **Plan** the installation of the fiber optic cable components.
4. **Install** the fiber optic cable system.
5. **Power** your SynchLink system.

Analyzing your SynchLink Application

When analyzing your current or new SynchLink application, use a project plan to design your SynchLink fiber optic cable system. If you are adding new cable segments to an existing installation, create a design plan for these cable segments and identify their purpose.

By creating a plan and analyzing your design you will be eliminating the potential for misapplication of media. Use the topologies described in Chapter 2, SynchLink Topologies to determine your SynchLink cable system's topology. The system's topology helps you determine the cable system components needed to meet application requirements.

SynchLink Fiber Optic Cable System

The SynchLink fiber optic cable system is designed to be user-constructed and installed. To take full advantage of this flexibility, you should spend sufficient time planning your system's installation **before** assembling any of the hardware.

The time and effort spent on planning your cable system installation will be insignificant compared to the time and effort required to locate and repair damaged or improperly installed hubs, cables, and/or other cable system components. For more information, see Chapter 6, Planning a SynchLink Fiber Optic Cable System.

IMPORTANT Since SynchLink lacks many features of a typical network, we recommend that you use it in conjunction with a ControlNet, EtherNet I/P, or DeviceNet network for monitoring SynchLink node status and other appropriate functions.

Determine Your Topology

The first step is to analyze your application and determine the topology of your SynchLink system. SynchLink system topologies are described in Chapter 2. Specific configurations that may be used in each topology are described in Chapter 4.

Identifying System Components

The SynchLink fiber optic cable system is comprised of these components:

- Cable Assemblies
- Base Blocks
- Splitter Blocks
- Bypass Switches

For more information on SynchLink fiber optic cable components, see Chapter 6, Planning a SynchLink Fiber Optic Cable System.

Planning System Installation

When planning your SynchLink fiber optic cable system installation:

1. Determine how many nodes will be in the SynchLink system.
2. Select the topology.
3. Determine the length of the fiber segments (each segment must be ≤ 300m).

Installing the System

When you install the SynchLink Fiber Optic Cable system, you use:

- SynchLink Hub, including the SynchLink Base Block and up to four Splitter Blocks
- SynchLink Bypass Switch Block
- Fiber Optic Cables

Powering your System

To power your SynchLink fiber optic cable system:

1. Connect cables to nodes, hubs, or bypass switches in accordance with your cable layout.
2. Power hubs and bypass switches in accordance with instructions provided in their installation instructions.

IMPORTANT

Be certain that all blocks are attached and secured prior to applying power to them. Failure to do so may cause damage to the blocks.

Be certain to properly ground the DIN rails. Refer to the instructions provided with the DIN rails.

Chapter Summary

In this chapter, you read about an overview of the SynchLink Fiber Optic cable system.

Chapter 6 explains Planning a SynchLink Fiber Optic Cable System.

Notes:

Planning a SynchLink Fiber Optic Cable System

Read this chapter to plan your SynchLink fiber optic cable system installation.

For more information about:	See page:
Developing a Plan	6-1
Selecting a Topology	6-2
Planning Installation of the System Components	6-3
Estimating Cable Lengths	6-4

Developing a Plan

The SynchLink fiber optic cable system is designed to be user-constructed and installed. To take full advantage of this flexibility, you should spend sufficient time planning your system's installation **before** assembling any of the hardware.

With a design analysis and, consequently, a system plan, you can eliminate the potential for misapplication of media. The time and effort spent planning your cable system installation is insignificant compared to the time and effort required to locate and repair damaged or improperly installed hubs, cables, and/or other cable system components.

IMPORTANT Since SynchLink lacks many features of a typical network, we recommend that you use it in conjunction with a ControlNet, EtherNet I/P, or DeviceNet network for monitoring SynchLink node status and other appropriate functions.

Selecting a Topology

The first step to using fiber media is to analyze your application and determine the topology of your SynchLink system. Table 6.1 offers a brief description of each SynchLink topology. For more information on each of the SynchLink topologies, see Chapter 2, SynchLink Topologies.

Table 6.1
SynchLink Topologies

Topology:	Brief description:	Advantages:	Disadvantage:
Star	A hub is placed in the physical center of the link. Nodes are connected to the hub like points on a star, and each node has a direct, dedicated line to the hub. Highlights include: • Up to 17 hubs (1 primary and 16 secondary) • Up to 257 nodes (1 Master, 256 Slaves) • 300m cable segment length (between any 2 nodes)	• Cabling is easier to install and maintain. • If a node fails, is powered down, or disconnected from the hub, it is the only node affected. • Faults are easier to locate and isolate.	The hub is a single-point of failure.
Daisy Chain	System starts at the Master Node and ends at an End Node. You can also include Center Nodes that receive and transmit data as needed. Highlights include: • Up to 10 nodes, beginning at Master Node and ending at End Node • 300m cable segment length (between any 2 nodes)	• Topology does not require a hub. • Offers a bypass switch, so you can keep the link running while one or more nodes are temporarily powered down.	A node failure will bring down the entire link.
Ring	Permutation of the daisy chain configuration. In the ring configuration, the SynchLink network starts and ends at the Master Node. Highlights include: • Up to 10 nodes, beginning and ending at Master Node • 300m cable segment length (between any 2 nodes)	• Topology does not require a hub. • Offers a bypass switch, so you can keep the link running while one or more nodes are temporarily powered down.	A node failure will bring down the entire link.

Planning Installation of the System Components

To achieve maximum signal quality and cable protection in a specific environment with minimum cable usage, follow these steps:

1. Determine how many nodes will be in the SynchLink system.
2. Select the topology.
3. Identify the actual location of the SynchLink nodes, hubs, and bypass switches (if applicable) using an equipment floor plan.
4. Identify the preliminary cable route. Cable should be readily accessible when new nodes are added, existing nodes are moved to new locations, or maintenance is performed.
5. Identify the environmental conditions (e.g. temperature, humidity, exposure to hazardous chemicals) in the cable route.
6. Determine how to bypass physical and environmental obstacles (e.g. walkways, induction heat sources, caustic chemical operations, steam and condensation lines) in the cable route.
7. Determine the best type of cable installation (conduit, raceway, or equivalent) for all cable segments in the cable route.
8. Calculate the cable segment length. Note that the cable path distances should be considered in three dimensions. Each segment must be ≤300m.
9. Document the cable layout. This document should describe the network cable system design and installation and should be maintained throughout the life of the network.

   The document should include charts showing routes of all cable segments, as well as locations of nodes, hubs, and bypass switches. This information should be detailed enough to trace a signal path between any two points in the cable system in the event of a network failure or suspected problem.
10. Calculate the number of required cable system components and select their types. Refer to Table 7.1 on page 7-2 for a list of available components.
11. Select the tools and instruments necessary to perform the cable system installation.
12. Select the proper personnel to perform the cable installation. The fiber optic cables specified in this manual are flexible type cables which can be installed by a trained plant electrician.

Estimating Cable Lengths

The SynchLink system requires the use of pre-terminated cable assemblies. SynchLink fiber optic cable segments are limited to a maximum of 300m. If your distance requirements are greater than 300m, you need to revise your floor plan.

IMPORTANT Avoid jointing your cable. Splicing adapters can cause considerable attenuation and limit the maximum length of your system. Make sure to check the attenuation of different cable sections after the cable is installed.

Chapter Summary

In this chapter, you read about planning a SynchLink fiber optic cable system.

Chapter 7 explains Installing a SynchLink Fiber Optic Cable System.

Installing a SynchLink Fiber Optic Cable System

This chapter describes how to install a SynchLink fiber optic cable system.

For more information about:	See page:
Using Pre-terminated Fiber Cable	7-2
Using Cable System Components	7-2
Mounting and Removing Your Fiber Blocks	7-5

ATTENTION

When installing a SynchLink fiber optic cable system, remember the following:

- Never look into a transmitter's output or the end of a cable with an active transmitter connected.
- Do not look directly into the fiber ports. Light levels may cause damage to your eyesight.
- Never use a microscope to view an active cable system. The concentration of light from the microscope could cause permanent damage to your eye. SynchLink products are Class I LED products.

Using Pre-terminated Fiber Cable

Rockwell Automation offers simplex pre-terminated cable assembles listed in Table 7.1. For information regarding other fiber products not covered in this manual, consult your local fiber media distributor.

Using Cable System Components

SynchLink fiber optic cable systems are built using components listed in Table 7.1.

Table 7.1
SynchLink Fiber Optic Cable System Products

Product:	Catalog Number:	Description:
Base Block	1751-SLBA	Base block
Splitter Block	1751-SL4SP	4-port splitter block
Bypass Switch Block	1751-SLBP	Bypass switch block
Fiber optic cables		
1m cable assembly (x2)	1403-CF001	1m pre-terminated 200 micron HCS cable segment
3m cable assembly (x2)	1403-CF003	3m pre-terminated 200 micron HCS cable segment
5m cable assembly (x2)	1403-CF005	5m pre-terminated 200 micron HCS cable segment
10m cable assembly	1403-CF010	10m pre-terminated 200 micron HCS cable segment
20m cable assembly	1403-CF020	20m pre-terminated 200 micron HCS cable segment
50m cable assembly	1403-CF050	50m pre-terminated 200 micron HCS cable segment
100m cable assembly	1403-CF100	100m pre-terminated 200 micron HCS cable segment
250m cable assembly	1403-CF250	250m pre-terminated 200 micron HCS cable segment

Installation Guidelines for Fiber Blocks

Follow these guidelines when you plan and install your fiber blocks:

- Observe the environmental specifications for the fiber blocks as outlined in each installation instruction.
- Avoid electrostatic and electromagnetic fields at installation sites.
- Avoid corrosive and inflammable gases, dust, conductive particles, oil mist and organic solutions when choosing an installation site.
- Prevent exposure to water or direct sunlight.
- Mount the blocks in a NEMA type enclosure.
- Allow a minimum of 2in (5cm) space from surrounding equipment for proper ventilation.
- To maintain proper ventilation, do not mount the modules upside down.
- Regardless of mounting position, the operating temperature must not exceed 55°C (131°F) 1.0in (2.54cm) below each block.
- Make sure the bypass switch power is ON when the local SynchLink node is powered down. If necessary, install the bypass switch in an individual enclosure.
- Do not exceed the maximum specified length of power supply and digital input wires. For bypass switch block specifications, see page A-8.

- The total length of the fiber optic cable should not exceed 300m.
- In a star configuration, 300m is the maximum for any of the following cable segments:
  - between time master and base block
  - between time slave and splitter block
  - between base block of one hub and splitter block of another hub
- In a daisy chain or ring configuration, 300m is the total length of cable between two adjacent nodes. If bypass switches are used, the maximum length is the sum of lengths of three cables, as shown in Figure 7.1.

Figure 7.1

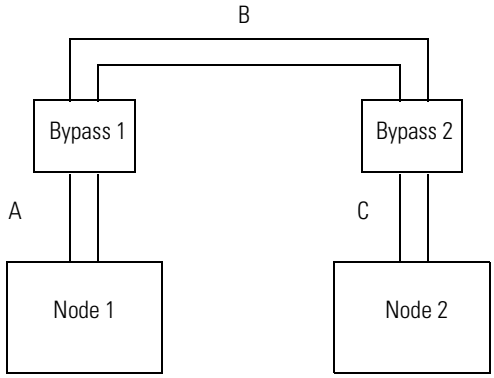

$A + B + C \leq 300m$

For more information on hubs and bypass switch blocks, refer to the publications listed in Table 7.2. These documents are available at The Automation Bookstore (**www.theautomationbookstore.com**).

Table 7.2
Publications Related to the Hubs and Bypass Switch Blocks

Publication Title:	Catalog Number:	Publication Number:
SynchLink Base Block Installation Instructions	1751-SLBA	1751-IN001
SynchLink 4-port Splitter Block Installation Instructions	1751-SL4SP	1751-IN002
SynchLink Bypass Switch Block Installation Instructions	1751-SLBP	1751-IN003

Mounting and Removing Your Fiber Blocks

You can horizontally or vertically mount SynchLink blocks on a standard 35mm DIN rail.

- To install the blocks, snap them on the DIN rail by hand.
- To remove components from the DIN rail, use a flat-blade screwdriver.

An example of the DIN-rail mounted SynchLink hub is shown in Figure 7.2.

ATTENTION

When properly installed, SynchLink blocks are grounded through the DIN rail to chassis ground. Use zinc-plated, yellow-chromated steel DIN rail to assure proper grounding. Using other DIN rail materials (e.g. aluminum, plastic, etc.) which can corrode, oxidize, or are poor conductors can result in improper or intermittent platform grounding. Mount blocks only on zinc-plated, yellow-chromated steel DIN rail. Refer to the blocks' installation instructions for more information.

Figure 7.2 DIN-Rail Mounted SynchLink Hub

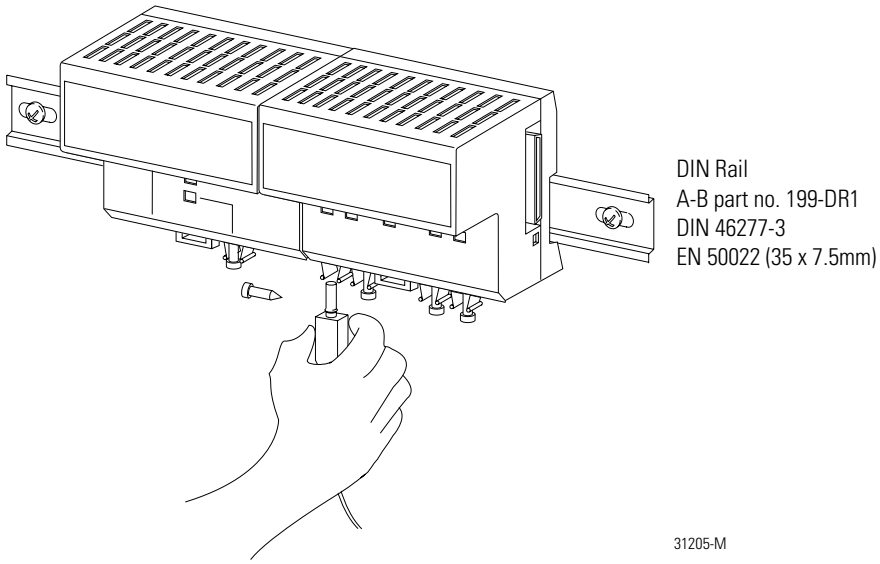

Chapter Summary

In this chapter, you read about installing a SynchLink fiber optic cable system.

Chapter 8 offers Guidelines for SynchLink Fiber Optic Cable Installation.

Guidelines for SynchLink Fiber Optic Cable Installation

This chapter describes guidelines for cable installation.

For more information about:	See page:
Following General Rules for Safety	8-2
Guidelines for Handling Fiber Optic Cable	8-2
Direct Attachment	8-6
Direct Attachment	8-6
Indirect Attachment	8-6
Conduit and Duct Installation	8-7
Vertical Installation	8-9

IMPORTANT This guide describes cable installation inside of a manufacturing building. Other types of installations of the SynchLink cable are not permitted.

Following General Rules for Safety

The following section outlines specific rules and guidelines to follow when you install SynchLink fiber optic cable systems.

SynchLink is designed to be user-constructed and installed. We offer pre-terminated cable assemblies that allow you to easily install a SynchLink fiber optic cable system.

Many of our customers are qualified to plan and install their own SynchLink fiber optic systems. Rockwell Automation sells the necessary components to implement an application but we do not offer cable installation services. If your company does not have qualified staff to install fiber optic cable you should contract a specialist. When fiber optic cable installation is required to be certified, it is important to select a cable installation specialist to assess your needs and to install your fiber optic cable system.

The specialist you choose should install your cable following the supplier's installation instructions. Installation should include complete documentation of cable routing and where every cable segment is connected.

Guidelines for Handling Fiber Optic Cable

We encourage you to observe all of the guidelines listed in Table 8.1 when you handle fiber optic cables. These guidelines are designed to protect the safety of everyone who handles, uses or works near fiber optic systems. Also, the guidelines help establish an environment that will allow you to get the greatest performance from your fiber optic system

ATTENTION

When installing a SynchLink fiber optic cable system, remember the following:

- Never look into a transmitter's output or the end of a cable with an active transmitter connected.
- Do not look directly into the fiber ports. Light levels may cause damage to your eyesight.
- Never use a microscope to view an active cable system. The concentration of light from the microscope could cause permanent damage to your eye. SynchLink products are Class I LED products.

Table 8.1 lists fiber optic cable handing guidelines.

Table 8.1
Guidelines for Handling Fiber Optic Cable

Guideline	Description
Minimum bend radius	Observe the minimum fiber cable bend radius specified.
Skin Contact	Do not touch the ends of the fiber optic strands. The fiber can break easily and pierce your skin.
Contamination	• Do not let the ends of a fiber optic cable come into contact with dust, dirt, or other contaminants. • Clean contaminated ends with a soft, clean, lintless cloth and alcohol.
Protective caps	Attach protective caps onto fiber ports when they are disconnected.
Installation training	Train personnel on usage of the installation tools to place and terminate fiber cable, including training on hand-held tools, tension meters, optical power meters, cleaners, and adhesives.
Installation regulations	Observe all local regulations for installation including personal safety equipment and the guidelines for its use.
Proper disposal	Always dispose of fiber waste. Disposing of fiber waste prevents the contamination of clothes, fingers, or eyes of glass fragments. Do not leave pieces of fiber cable on your work surfaces.
Specifications	• Review cable specifications for distances and required connectors. • Review all cable parameters and specifications before installation. Make sure that you have the proper amount of connectors and installation equipment. Never attempt to use non-compatible connectors and installation tools.
Pulling tensions	• Observe the maximum pulling tensions. Do not pull directly on fiber or force cable into a bend radius less than the maximum allowable. This will crack the glass and result in optic loss. • The cable should never be pulled at a force greater than the maximum allowable pulling tension. Excessive loads from bending or pulling may cause fiber damage. Use a running line tension meter to determine the pulling tension applied during cable placement. • Never allow tight loops, knots, kinks, or tight bends in the cable. • The cable should not be pulled around any bends smaller than 20 times the cable diameter when under load and 10 times the cable diameter at no load. • Entrance in and out of metal pull boxes must be smooth as not to damage the cable sheath

.

ATTENTION

Do not leave any fiber pieces on your work surface. The glass is very small and can penetrate your skin easily.

Cable Protection and Isolation Recommendations

The cable installation should conform to all applicable codes.

IMPORTANT In order to successfully apply the concepts and techniques contained in this manual, you must have a fundamental knowledge of electronics and electrical codes.

Cable Protection

The fiber optic cable must be properly handled prior to and during installation. Improper handling may result in cable damage and require cable replacement. Use the following guidelines when handling the fiber optic cable:

- Keep the cable ends tightly sealed during storage, transportation, and installation of the cable. Keeping the cable ends sealed will prevent exposure to moisture or other foreign matter.
- Do not exceed the minimum bend radius of the cable during storage or installation. Refer to Appendix B for cable specifications. Bending the cable sharper than the recommended minimum bend radius may decrease the reliability of the SynchLink.
- Prevent the cable from contacting abrasive surfaces such as concrete.
- Follow the cable pulling recommendations specified in sections Chemical and Thermal Isolation and Physical Isolation.

Chemical and Thermal Isolation

The fiber optic cable must be protected from damage caused by:

- Oil, grease, acids, caustics, and other harsh and/or hazardous chemicals that might damage the cable jacket and connectors.
- Water, steam, and other liquids.
- Open flame, steam lines, and any equipment with the temperature higher than the cable operating temperature.

Physical Isolation

Use the following guidelines to prevent physical damage and wear of the fiber optic cable:

- Protect the cable from abrasion, vibration, moving parts, and personnel traffic.
- Avoid intersecting a cable route with the regular routes of cranes, forklifts, and similar equipment.
- Prevent the cable from contacting abrasive surfaces such as concrete.

Pre-Terminated Cable Installation Guidelines

Cable Inspection and Testing

Inspect and test the cable before and after the installation to make sure that the attenuation does not exceed the expected maximum value of 12 dB/km.

Although cable assemblies are pretested before shipment, they can be damaged when shipped or stored improperly. To measure cable attenuation, use a power meter described on page 9-2.

Cable Pulling

Pull the cable manually, allowing sufficient slack in the cable so that there is no tension on the cable or connectors when installed. Do not “snap” or apply sudden tension to the cable. Never use a powered cable puller without consulting the cable manufacturer and monitoring the pulling tension. High pulling tensions, tight-fitting conduits, and cable twisting can damage the cable.

Unterminated Cable Installation Guidelines

If you pull unterminated cable, pull it prior to connector installation; it becomes more difficult to protect fiber from stress after connectors have been mounted. Connectors may be pre-installed on one end, leaving the other end for pulling. Refer to the cable specifications and manufacturer's cable pulling instructions for additional information.

Cables should be lubricated prior to pulling to minimize the pulling forces on the cables. Lubricants such as waxes, greases, clay slurries, and water-based gels are compatible with most fiber optic jacket materials.

It is necessary to identify the strength member and the optical fiber location within the cable. Afterwards, a decision should be made to choose a cable pull method - pull or indirect attachment to make sure effective pulling without fiber damage. Never pull the cable by the fiber strand.

Direct Attachment

The cable strength member is attached directly to a pulling eye. Since epoxy glass central strength members are too rigid to tie, they may be secured to the eye using tight clamping plates or screws.

Indirect Attachment

Indirect attachment uses a pulling grip attached to the cable's outer jacket to distribute the pulling force over the outer portion of the cable. The pulling grip produces the least amount of stress in cables where the strength member lies directly beneath the jacket.

Conduit and Duct Installation

Installation procedures for conduit and wire duct installation of fiber optic cables are similar to those of electrical wires. Avoid yanking, flipping, or wrapping cables; this can cause unnecessary tightening. Fiber cable, electrical wires, small fiber optic cables should never be subjected to foot traffic or potentially crushing forces.

The following is a procedure for conduit or duct installation.

1. Attach the towline to the cable using direct or indirect attachment as described in previous section.

2. Establish two way communications between the cable payoff station, intermediate hand assist stations, and the pulling station.

3. Use the following items for duct or cable tray replacements:
   - adjustable lip clutch winch or equivalent
   - tension monitoring system with continuous readout
   - tow line that assures minimum friction
   - dedicated inner duct, mainly for pulls in underground conduit
   - cable end caps for use in flooded or unknown conduits and sealing cable ends after placement

4. Position the cable reel and payoff frame for pulling.

5. Mount the cable reel into the payoff apparatus so that the cable pays out from the top of the reel.

6. Attach the pulling grip to the cable and position the reel with its flanges perpendicular to the floor or support foundation.

7. Secure the payoff frame so it cannot move during pulling.

8. Maintain enough slack on the cable as the pull starts to prevent the cable from contacting any equipment in the area.

IMPORTANT Do not allow slack loops to form on the reel. Slack loops could cause a crossover and damage the cable. Always pull at slow speeds to limit the possibility of crossovers.

Plan your pull to avoid a pull equaling or exceeding the total bends to 360° per pull. If it is not possible to avoid a pull of 360°, install an intermediate junction box within the 360° pull. Plan on manually handling the cable along the pull route to help limit the bends.

9. Position the winch at the pull station to avoid a steep angle either entering the duct or exiting the cable tray.

IMPORTANT Do not exceed the maximum pulling tension for your fiber optic cable.

10. Leave enough extra cable to route to the equipment rack, put connectors on, and allow for future repairs when your pull is complete.

11. Cut off the pulling grip and the first 3 feet (1 meter) of cable behind it.

12. Terminate the cable.

13. Measure and record optical cable loss using a fiber optic power meter.

14. Seal the ends of the cable until they are connected.

In some applications you may have to start your pull in the middle of a duct or conduit and pull in both directions. In this scenario, pull in the first direction using the reel and payoff frame. In the other direction, lay out the cable in a figure 8 pattern on the floor. When the second pull begins, hand feed the cable into the duct system.

IMPORTANT Be certain to clear the floor of dust, debris, and dirt before placing the cable on the floor.

Vertical Installation

The requirements of your application may require a vertical installation. You can install fiber optic cable vertically in trays, shafts, or towers. Dielectric cables are recommended for applications requiring high vertical installations.

Plans for Vertical Cable Installation

Use the following guidelines when planning a vertical cable installation.

1. Clamp cable to give extra support while preventing ice loading and wind slapping.

   Your specific environment determines where you should clamp your cable. Clamping intervals can be as short as 3 feet (1 meter) and as long as 50 to 100 feet (15 to 30 meters) in interior locations.

   Cables in vertical cable shafts are generally clamped directly to the walls of the shaft.

   Cables installed in elevator shafts are usually supported by suspension strands and suspended from the top of the shaft. The suspension strand is attached to the wall at frequent intervals and at the bottom of the shaft. Consult your local codes and practices for installation in an elevator shaft.

2. Plan cable runs that keep bends to a minimum.

3. Drill all holes for the entire run large enough to accommodate steel sleeves when passing cables through walls and floors.

   The inside diameter of steel sleeves should be 4 times the diameter of the cable. The minimum diameter of a steel sleeve is 2in (5cm).

   Steel sleeves are required to run cable through a firewall. Consult your local codes and practices for installations through firewalls.

4. Measure and record optical cable loss using a fiber optic power meter.

5. Seal the ends of the cable until they are connected.

Chapter Summary

In this chapter you read about guidelines for fiber optic cable installation.

Chapter 9 explains Maintenance and Troubleshooting.

Maintenance and Troubleshooting

This chapter describes how to maintain and troubleshoot your fiber optic cable system.

For more information about:	See page:
Cable System Maintenance	9-1
Measuring Power Loss	9-2

Cable System Maintenance

Even if the installation is done properly, the SynchLink cable system may still experience some unexpected downtime. This may be due to gradual degradation of the cable system components or changes in the environmental conditions along the cable path. Because of this, some limited preventative maintenance is required.

The recommended maintenance includes:

- Cable System Documentation Maintenance
- Cable System Design Maintenance
- Cable System Inspection

Cable System Documentation Maintenance

During the life of the SynchLink system, make sure you update the cable system documentation when changes are made to the SynchLink configuration.

Cable System Design Maintenance

When old equipment is relocated or new equipment is installed, new sources of heat, hazardous chemicals, and other changes in the cable system environment occur. Evaluate the effect these changes have on the performance of the SynchLink. If necessary, take corrective action, such as rerouting certain cable segments.

Cable System Inspection

Inspect the cable system periodically, including testing cable loss as described in the next section. Make sure you properly document all tests.

Measuring Power Loss

You should test each cable segment before and after its installation to verify that cable attenuation does not exceed 12dB/km. This test is called power loss measurement and is conducted using an optical power meter.

We recommend you use a test kit that includes a light source and a power meter. The power source must emit light at nominal wavelength of 640nm (red) only or you get incorrect results. Follow the manufacturer's instructions for the power loss measurement procedure.

The test kit example is the T701 Test Kit with the H-P HFBR-4501 adapter. Fotec Incorporated manufactures the test kit and can be contacted by:

- phone - 800.537.8254 in the United States
- internet - http://www.fotec.com

Always record and maintain records for attenuation levels for each cable segment. The attenuation records are valuable tools for troubleshooting and maintaining your cable system.

Considerable power loss in your cable could be a result of:

- improper bend radius
- bending losses
- broken fibers
- poor connections
- contaminated or damaged connectors

Chapter Summary

In this chapter, you read about maintenance and troubleshooting.

Appendix A lists the Specifications for the ControlLogix SynchLink module, ControlLogix Drive modules and PowerFlex 700s DriveLogix drives.

Specifications

This appendix lists specifications for the following products:

- 1756-SYNCH SynchLink module
- 1756-DMxxx Series Drive module
- PowerFlex 700S Drive
- 1751-SL4SP SynchLink 4-Port Splitter Block
- 1751-SLBA SynchLink Base Block
- 1751-SLBP SynchLink Bypass Switch Block

Table 1.1
1756-SYNCH SynchLink Module Specifications

Module Location	1756 ControlLogix Chassis
Backplane Current	1.2A @ 5.1V dc & 3mA @ 24V dc
Maximum Power Dissipation	6.19W
Thermal Dissipation	21.1 BTU/hr
Connecting Cable	
Fiber Type	200/230 micron HCS (Hard Clad Silica)
Fiber Termination Type	Versalink V-System
Assemblies	Cable assemblies can be ordered from Rockwell Automation, catalog number 1403-CFxxx (xxx = length in meters); or from Lucent Technologies, Specialty Fiber Technologies division.
Maximum Length	300m
Minimum Length	1m
Operating Wavelength	650nm (red)
SynchLink Data Rate	5Mbps
Type of Communication	Synchronous
Frame Parameters	3 Flags - 3 bytes Control field - 1 byte Data field - 24 bytes CRC field - 2 bytes

Table 1.1
1756-SYNCH SynchLink Module Specifications

Frame Period	50µs
Indicators	Green and red indicators for operation, status and diagnostics
Environmental Conditions[1]	
Operating Temperature	0ºC - 60ºC (32ºF - 140ºF)
Storage Temperature	-40ºC - 85ºC (-40ºF - 185ºF)
Relative Humidity	5 to 95%, 0ºC - 60ºC non-condensing
Shock Operating	30g peak acceleration, 11 (± 1)ms pulse width
Shock Non-Operating	50g peak acceleration, 11 (± 1)ms pulse width
Vibration	Tested 2g @ 10-500Hz per IEC 68-2-6
Agency Certifications	Listed Industrial Control Equipment Certified Process Control Equipment Certified Class I, Division 2, Groups A, B, C, D Marked for all applicable directives Marked for all applicable acts N223

1 This product must be mounted within a suitable system enclosure to prevent personal injury resulting from accessibility to live parts. The interior of this enclosure must be accessible only by the use of a tool. This industrial control equipment is intended to operate in a Pollution Degree 2 environment, in overvoltage category II applications, (as defined in IEC publication 664A) at altitudes up to 2000 meters without derating.

Table 1.2
1756-DMxxx Drive Module Specifications

Operating Wavelength SynchLink Drive Communication	 650nM (red) 820nM (red)
Data Rate SynchLink Drive Communication	 5M bit/s 10M bit/s
SynchLink Connecting Cable	
Fiber Type	200/230 micron HCS (Hard Clad Silica)
Fiber Termination Type	Versalink V-System
Assemblies	Cable assemblies can be ordered from Rockwell Automation, catalog number 1403-CFxxx (xxx = length in meters); or from Lucent Technologies, Specialty Fiber Technologies division.
Maximum Length	300m
Minimum Length	1m
Drive Communication Cable	
Fiber Type	1mm Plastic or 200M Glass Fiber
Assemblies	Cable assemblies can be ordered from Rockwell Automation, catalog number 1756-DMCFxxx (xxx = length in meters); or from Belden P/N 225362 or Mohawk P/N M92021, 62.5 micron Duplex Fiber Optic cable.
Maximum Length	300m
Minimum Length	1m
SynchLink Maximum Node Count	10 - daisy chain, 256 - star configuration (w/ multiplexing blocks)
Drive Communication Maximum Node Count	1 - PMI chassis
Backplane Current	1.35A @ 5.1V dc 3.0 mA @ 24V dc
Power Dissipation	6.96W maximum, 23.7 BTU/hour
Environmental Conditions	
Operating Temperature	0°C - 60°C (32°F - 140°F)
Storage Temperature	-40°C - 85°C (-40°F - 185°F)
Relative Humidity	5 to 95%
Shock Operating	30g peak acceleration, 11 (± 1)ms pulse width
Shock Non-Operating	50g peak acceleration, 11 (± 1)ms pulse width
Vibration	Tested 2g @ 10-500Hz per IEC 68-2-6
Agency Certifications	Listed Industrial Control Equipment Non-Hazardous Certified Class I, Division 2, Groups A, B, C, D Marked for all applicable directives

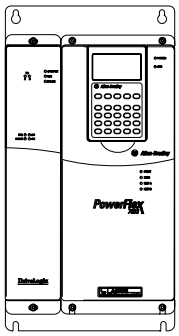

Table 1.3
PowerFlex 700S AC Drive and 700S DriveLogix AC Drive Specifications

Operator Interface	LCD HIM places drive information in a 7-line by 21-character display that supports a variety of languages				
3-Phase Voltage	200-240V, 400-480V, 500-600V, 690V + 10%				
Common DC Bus Voltage Ratings	325V, 650V, 810V, 930V				
Frequency	47-64Hz				
Output Voltage	Adjustable from 0V to rated motor voltage				
Frequency Range	0-400Hz				
Intermittent Current	To 110% for 60s, 150% for 3s				
Instantaneous Over Current Trip	TBD				
Enclosure Ambient Operating Temperature	NEMA Open Type (I/P00)0ºC - 50ºC (32ºF - 122ºF) NEMA Type 10ºC - 40ºC (32ºF - 104ºF) IP20 0ºC - 50ºC (32ºF - 122ºF)				
Dimensions (HxWxD) and Ratings	**Frame 1**	389in x 200in x 200in (15.31mm x 7.87mm x 7.87mm)			
	Power	**Class**	**Amps Continuous**	**Amps for 60s**	**Amps for 3s**
	0.5 to 15Hp	480	14 to 22	16.5 to 24.2	22 to 33
	0.37 to 11kW	400	15.4 to 22	17.2 to 24.2	23.1 to 33
	0.37 to 5.5kW (0.5 to 7.5Hp)	200	15.3	17.4 to 24.2	23.2 to 33
	TBD	600	TBD	TBD	TBD

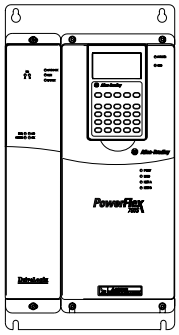

Table 1.3
PowerFlex 700S AC Drive and 700S DriveLogix AC Drive Specifications

Dimensions (HxWxD) and Ratings	**Frame 2**	389in x 200in x 200in (15.31mm x 7.87mm x 7.87mm)			
	Power	**Class**	**Amps Continuous**	**Amps for 60s**	**Amps for 3s**
	20 to 25Hp	480	27 to 34	33 to 40.5	44 to 54
	15 to 18.5kW	400	30 to 37	33 to 45	45 to 60
	7.5kW (10Hp)	200	28	33	44
	TBD	600	TBD	TBD	TBD
	Frame 3	564in x 200in x 200in (22.20mm x 7.87mm x 7.87mm)			
	Power	**Class**	**Amps Continuous**	**Amps for 60s**	**Amps for 3s**
	30 to 40Hp	480	40 to 52	51 to 60	68 to 80
	22kW	400	43	56	74
	11kW (15 to 20Hp)	200	42 to 54	46.2 to 63	63 to 84
	TBD	600	TBD	TBD	TBD
Agency Certifications	Listed Industrial Control Equipment Non-Hazardous Certified Class I, Division 2, Groups A, B, C, D Marked for all applicable directives Marked for all applicable acts N223				

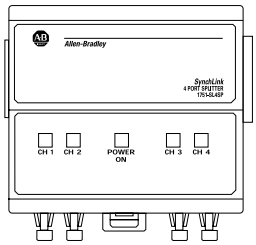

Table 1.4
1751-SL4SP SynchLink 4-Port Splitter Block Specifications

Communication Rate	5M bit/s
Splitter Block Power Consumption	0.300 A @ 5.1V dc 5V dc input from 1751-SLBA
Environmental Conditions[1]	
Operating Temperature	0°C - 60°C (32°F - 140°F)
Storage Temperature	-40°C - 85°C (-40°F - 185°F)
Relative Humidity	5 to 95%, 0°C - 60°C non-condensing
Shock Operating	30g peak acceleration, 11 (± 1)ms pulse width
Non-Operating	50g peak acceleration, 11 (± 1)ms pulse width
Vibration	Tested 5g @ 10-500Hz per IEC 68-2-6
Fiber Optic Cable	
Fiber Type	200/230 micron HCS (Hard Clad Silica)
Fiber Termination Type	Versalink V-System
Assemblies	Cable assemblies can be ordered from Rockwell Automation, catalog number 1403-CFxxx (xxx = length in meters); or from Lucent Technologies, Specialty Fiber Technologies division.
Maximum Length	300m
Minimum Length	1m
Agency Certifications	Listed Industrial Control Equipment Certified Process Control Equipment Certified Class I, Division 2, Groups A, B, C, D Marked for all applicable directives Marked for all applicable acts N223

1 This product must be mounted within a suitable system enclosure to prevent personal injury resulting from accessibility to live parts. The interior of this enclosure must be accessible only by the use of a tool. This industrial control equipment is intended to operate in a Pollution Degree 2 environment, in overvoltage category II applications, (as defined in IEC publication 664A) at altitudes up to 2000 meters without derating.

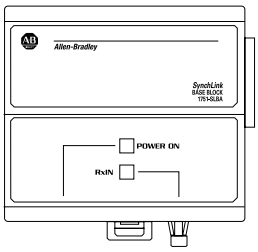

Table 1.5
1751-SLBA SynchLink Base Block Specifications

Power Supply	To comply with CE Low Voltage directives, you must use a Safety Extra Low Voltage (SELV) or a Protected Extra Low Voltage (PELV) power supply to power this base block. Use a NEC/CEC Class 2 power supply in order to comply with UL and CSA requirements.
Input Voltage Rating	24V dc nominal
Input Voltage Range	20V dc to 30V dc A regulated power supply is recommended.
Power Consumption	600mA maximum from external 24V supply based on worst case block loading (four splitters)
Output Voltage Rating	5.1V dc nominal
Communication Rate	5M bit/s
Environmental Conditions[1]	
Operating Temperature	0ºC - 60ºC (32ºF - 140ºF)
Storage Temperature	-40ºC - 85ºC (-40ºF - 185ºF)
Relative Humidity	5 to 95%, 0ºC - 60ºC non-condensing
Shock Operating	30g peak acceleration, 11 (± 1)ms pulse width
Non-Operating	50g peak acceleration, 11 (± 1)ms pulse width
Vibration	Tested 5g @ 10-500Hz per IEC 68-2-6
Fiber Optic Cable	
Fiber Type	200/230 micron HCS (Hard Clad Silica)
Fiber Termination Type	Versalink V-System
Assemblies	Cable assemblies can be ordered from Rockwell Automation, catalog number 1403-CFxxx (xxx = length in meters); or from Lucent Technologies, Specialty Fiber Technologies division.
Maximum Length	300m
Minimum Length	1m
Power Conductors	
Wire Size	12 gauge maximum, 24 gauge minimum (#12 AWG to 24 AWG), stranded
Category	2[2]
Maximum Length	3m

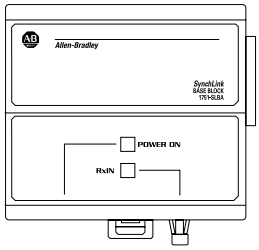

Table 1.5
1751-SLBA SynchLink Base Block Specifications

Agency Certifications	Listed Industrial Control Equipment Certified Process Control Equipment Certified Class I, Division 2, Groups A, B, C, D Marked for all applicable directives Marked for all applicable acts N223

1 This product must be mounted within a suitable system enclosure to prevent personal injury resulting from accessibility to live parts. The interior of this enclosure must be accessible only by the use of a tool. This industrial control equipment is intended to operate in a Pollution Degree 2 environment, in overvoltage category II applications, (as defined in IEC publication 664A) at altitudes up to 2000 meters without derating.

2 Use this category information for planning conductor routing as described in publication 1770-4.1, "Industrial Automation Wiring and Grounding Guidelines."

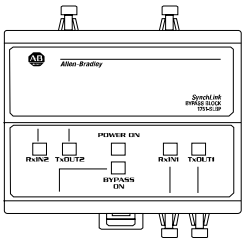

Table 1.6
1751-SLBP SynchLink Bypass Switch Block Specifications

Power Supply	To comply with CE Low Voltage directives, you must use a Safety Extra Low Voltage (SELV) or a Protected Extra Low Voltage (PELV) power supply to power this bypass switch block. Use a NEC/CEC Class 2 power supply in order to comply with UL and CSA requirements.
Input Voltage Rating	24V dc nominal
Input Voltage Range	20V dc to 30V dc A regulated power supply is recommended.
Communication Rate	5M bit/s
Bypass Switch Block Power Consumption	150mA maximum from external 24V dc supply
Environmental Conditions[1]	
Operating Temperature	0°C - 60°C (32°F - 140°F)
Storage Temperature	-40°C - 85°C (-40°F - 185°F)
Relative Humidity	5 to 95%, 0°C - 60°C non-condensing
Shock Operating	30g peak acceleration, 11 (± 1)ms pulse width
Shock Non-Operating	50g peak acceleration, 11 (± 1)ms pulse width
Vibration	Tested 5g @ 10-500Hz per IEC 68-2-6

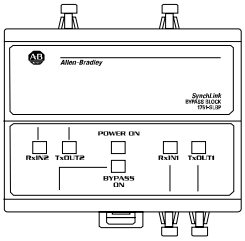

Table 1.6
1751-SLBP SynchLink Bypass Switch Block Specifications

Fiber Optic Cable	
Fiber Type	200/230 micron HCS (Hard Clad Silica)
Fiber Termination Type	Versalink V-System
Assemblies	Cable assemblies can be ordered from Rockwell Automation, catalog number 1403-CFxxx (xxx = length in meters); or from Lucent Technologies, Specialty Fiber Technologies division.
Maximum Length	300m
Minimum Length	1m
Power Conductors	
Wire Size	12 gauge maximum, 24 gauge minimum (#12 AWG to 24 AWG), stranded
Category	2[2]
Maximum Length	3m
Digital Input	Isolated, sinking
ON-State Voltage	12V dc minimum 24V dc nominal 30V dc maximum
ON-State Current	12mA nominal @ 24V dc
OFF-State Voltage	8V dc maximum
Isolation Voltage	850V dc
Conductors	Use shielded two-conductor cable
Wire Size	12 gauge maximum, 24 gauge minimum (#12 AWG to 24 AWG), stranded
Category	2[2]
Maximum Length	10m
Agency Certifications	Listed Industrial Control Equipment Certified Process Control Equipment Certified Class I, Division 2, Groups A, B, C, D Marked for all applicable directives Marked for all applicable acts N223

1 This product must be mounted within a suitable system enclosure to prevent personal injury resulting from accessibility to live parts. The interior of this enclosure must be accessible only by the use of a tool. This industrial control equipment is intended to operate in a Pollution Degree 2 environment, in overvoltage category II applications, (as defined in IEC publication 664A) at altitudes up to 2000 meters without derating.

2 Use this category information for planning conductor routing as described in publication 1770-4.1, “Industrial Automation Wiring and Grounding Guidelines.”

SynchLink Fiber Optic Cable Description

Advantages of Fiber

Fiber media holds many advantages over traditional copper media. Because fiber optic media transmits digitized information via light pulses over glass or plastic fibers, it avoids many of the problems common with copper applications.

ATTENTION

If you are going to use fiber in an intrinsically safe area, consult with your local safety coordinator.

Table B.1 lists the benefits to using fiber media.

Table B.1
The Features and Benefits of Fiber Media

Feature:	Benefit:
Electrical Isolation	Fiber media is isolated from any potential electrical sources that cause disruptions on copper media.
Immunity to Interference	Fiber media is immune to electromagnetic interference (EMI) because it uses light pulses on glass fibers. Fiber media is also effective in noisy environments (heavy machinery, multiple cable systems, etc.) where copper could suffer disruptions.
Longer Distances	A fiber media has less loss than copper. The less loss in fiber media means fewer repeaters than traditional media, making fiber more effective for applications requiring long distance media connections. Fiber's signal capacity is ideal for a deterministic control network.
Decreased Size and Weight	Fiber media is smaller and lighter than copper media.
Entry into Hazardous Areas	Fiber media may provide a way to carry information into hazardous areas, reducing the risk of injury.

Optical Fiber Construction

Optical fiber consists of three major elements:

- buffer and coating
- core
- cladding

as shown in Figure 2.1. For more information on the three major parts, see Table B.2.

Figure 2.1

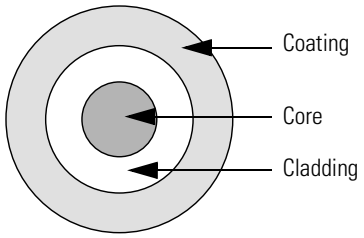

Table B.2

Optical Fiber Elements:	Description:
Buffer and Coating	The buffer and coating are the material that surround the glass fiber. They are responsible for protecting the fiber strands from physical damage.
Core	The core is the cylinder consisting of glass fiber which carries information in the form of light pulses.
Cladding	The cladding is a material that provides internal reflection so that the light pulses can travel the length of the fiber without escaping from the fiber.

Hard Clad Silica Fiber

The SynchLink cable system is designed for use with a 200 micron (step index multi-mode) **H**ard **C**lad **Silica** (HCS®) fiber. HCS fibers are coated with a patented hard polymer cladding that provides higher tensile strength, greater resistance to moisture, and lower microbending losses than conventional coatings.

HCS Cable Construction

The HCS cable is the core of the HCS fiber and is reinforced with aranid yarn-strength members and covered with a PVC outer jacket. The cable specification is shown in Table B.3.

Table B.3
HCS Cable Specification

Cable Construction	Simplex
Fiber Core Diameter (μτ)	200
Fiber Part Number	CF01493-10
Attenuation @ 650nm (dB/km)	≤12
Outer Cable Diameter (mm)	2.2
Outer Jacket Material	PVC
Standard Jacket Color	Blue
Cable Weight (kg/km)	6.1
Minimum Short-Term Pull Tension (lbs/N)	23/102
Maximum Long-Term Tension (lbs/N)	5/22
Break Strength (lbs/N)	34/151
Minimum Bend Radius (mm)	15
Operating Temperature (°C)	-40 to +85
Storage Temperature (°C)	-40 to +85
Flammability Rating	OFNR

Lucent Technologies, Specialty Fiber Technologies manufactures the HSC fiber, fiber optic cable, and cable assemblies.

Cable Assemblies

The SynchLink cable assemblies listed in Table B.4 are manufactured from 200/230 micron/simplex cable with a Versalink (V-Link) V-pin connections at the ends.

ATTENTION

- Never look into a transmitter's output or the end of a cable with an active transmitter connected.
- Do not look directly into the fiber ports. Light levels may cause damage to your eyesight.
- Never use a microscope to view an active cable system. The concentration of light from the microscope could cause permanent damage to your eye. SynchLink products are Class I LED products.

Table B.4
Fiber Optic Cable Assemblies Specifications

Cable Segment Length	300m maximum[1]
	1m minimum
Cable Splicing	Not permitted
Operating Wavelength	650nm (red) nominal
Cable Attenuation	12 dB/km maximum at 650nm

[1] The maximum cable length is calculated differently, depending on topology. For more information, see page 74.

Attenuation

The light loss of the fiber cable, specified in dB/km.

Base Block

A block that converts optical signals received from a SynchLink node into electrical signals and then “retimes” and “retransmits” the signals simultaneously to a maximum of four splitter blocks. The base block also supplies power to splitter blocks.

Beacon Signal

Transmission beginning with the SynchLink time master that is transferred between SynchLink nodes and used to maintain time synchronization; the beacon is included in the control field of the transmitted message. When SynchLink nodes receive the message with the beacon signal, they adjust the 1μS time base of their respective node clocks to synchronize with the time master node clock.

BER (Bit Error Rate)

The primary method of describing the data error rate. An acceptable error rate is 1×10^{-9} bit errors (or 1 error in 1000 Mbits transmitted).

Bend Radius

The maximum amount the cable can be bent and still function up to specification.

Buffer

The material surrounding the fiber (core, cladding, coating) that protects the fiber from physical damage. Tight buffers are in direct contact with the fiber. Loose-tube buffers provide a free environment for the fiber to float.

Buffered data

Data exchanged between SynchLink nodes. The data is appropriately segmented at the transmitting module and reassembled at the receiving module. Buffered data cannot be automatically forwarded to the next node in the daisy chain configuration.

Bypass Switch Block

A block used in the daisy chain and ring configurations to bypass a node temporarily disconnected from the SynchLink system.

Center node

A node in the SynchLink Daisy Chain or Ring configuration that receives data and transmits data.

Cladding

A layer of material surrounding the core of a fiber.

Coating

A protective plastic material surrounding the cladding.

Communications format

Format that defines the type of information transferred between an I/O module and its owner controller. This format also defines the tags created for each I/O module.

Compatible match

An electronic keying protection mode that requires the physical module and the module configured in the software to match according to vendor, catalog number and major revision. In this case, the minor revision of the module must be greater than or equal to that of the configured slot.

Connection

The communication mechanism from the controller to another module in the control system.

Coordinated system time (CST)

Clock that is used in:

- all modules in a single ControlLogix chassis

  or

- all ControlLogix chassis in a distributed control system.

The SynchLink system can synchronize this clock value across chassis.

Core

The central cylinder of a fiber that is made of plastic or glass.

Daisy chain configuration

SynchLink configuration that begins with a master node and ends at an end node. Center nodes may be used between the master and end in this configuration.

dB

A unit of measure for loss or gain of power described as 10 × log (Pout/Pin).

dBM

A power level referenced to 1mw, described as 10 × log (Poptical/1mw)

Direct data

Data delivered in a single message. A SynchLink message can allocate a maximum of four words. Direct data can be automatically forwarded to the next node in the daisy chain configuration.

Disable keying

Option that turns off all electronic keying to the module. Requires no attributes of the physical module and the module configured in the software to match.

Download

The process of transferring the contents of a project on the workstation into the controller.

Drive Communication

A fiber optic communications link that connects the Drive Module to a Reliance Electric Power Module Interface (PMI) chassis.

Distributed Power System (DPS)

A family of Reliance Electric drive products.

Electronic keying

A system feature which makes sure that the physical module attributes are consistent with what was configured in the software.

Exact match

An electronic keying protection mode that requires the physical module and the module configured in the software to match identically, according to vendor, catalog number, major revision and minor revision.

End node

A node in SynchLink Star and Daisy chain configurations that only receives data.

Fiber Optic Cable Segment

A fiber optic cable connecting any two physical devices including nodes, hubs, and bypass switches. This simplex cable connects the transmitter of one device with the receiver of another.

Field side

The interface between user field wiring and I/O module.

Hub

A modular, multi-port distribution unit in the star configuration that consists of a single base block and up to 4 splitter blocks. Unidirectional data passes through the hub.

Inhibit

A ControlLogix process that allows you to configure a SynchLink module but prevent it from communicating with the owner controller. In this case, the controller does not establish a connection.

Insertion Loss

A loss in dB caused by the disruption of light when an object is inserted in the light path (a connector, bulkhead, splice or cable).

Listen-only connection

An I/O connection that allows a controller to monitor I/O module data without owning the module.

Loss

see *Attenuation*

Major revision

A module revision that is updated any time there is a functional change to the module resulting in an interface change with software.

Master node

A node in any SynchLink configuration that serves as the time master.

Minor revision

A module revision that is updated any time there is a change to the module that does not affect its function or software user interface (e.g. anomaly fix).

Multimode

A class of fibers where the light travels in multiple paths down the fiber core.

Owner controller

The controller that creates and stores the primary configuration and communication connection to a module.

Plastic Clad Silica Fiber

A step-index fiber made from silica core and a plastic cladding.

Plastic Fiber

A fiber consisting only of plastic with usually higher attenuation rates than glass.

Power Module Interface (PMI)

The portion of the DPS equipment that receives Drive Communication from the Drive Module and directly controls the power structure.

Receive Port Communications Format

The communications format used in a ControlLogix SynchLink module for all data the module receives on its fiber optic receive port.

Receiver

Device that produces logic levels in a fiber optic system by using photo diodes, resistors, amplifiers, and level shift circuits.

Remote Axis Data

Motion data used by the motion planner in the controller. The 1756-SYNCH module can consume an Axis tag from a controller and pass it over SynchLink. A controller in another chassis can then consume axis tags passed over SynchLink from the 1756-SYNCH module in that chassis.

Removal and Insertion Under Power (RIUP)

A ControlLogix feature that allows a user to install or remove a module while power is applied.

Ring Configuration

SynchLink configuration that begins with the master node. Unidirectional data passes from the master node to up to nine other nodes and then back to the master node.

RSLogix 5000

The programming software for any ControlLogix system.

Splice

A connection in the fiber designed to increase the distance of the fiber.

Splitter Block

A 4-port block that converts electrical signals received from the base block into optical signals and retransmits them through four output ports.

Star configuration

A SynchLink topology where a hub is the physical center of the link and acts as a multi-port repeater that contains one receive and up to 16 transmit ports. SynchLink nodes are connected to the hub. Each node has its own direct, dedicated line to the hub. The Master node transmitter is connected to the hub receiver. The receiver of each of the Slave nodes is connected to an appropriate hub transmitter. The Master node receiver and Slave node transmitters are not connected. Messages transmitted by the Master node are retransmitted (repeated) simultaneously to all Slave nodes by the hubs.

SynchLink

A unidirectional fiber optic communications link that provides time synchronization and data broadcasting. These functions are used for distributed motion and coordinated drive control systems based on ControlLogix and PowerFlex 700S products.

SynchLink Fiber Optic Cable System

A fiber optic cable system consisting of cable segments and (depending on topology), hubs, or bypass switches.

SynchLink Node

A device that operates on the SynchLink for time synchronization and/or high speed data transfer, including:

- 1756-SYNCH module
- 1756-DMD30 & 1756-DMF30 modules
- PowerFlex 700S drive

SynchLink Node Clock

A base-line requirement of any product incorporating SynchLink and integral to all devices that contain SynchLink circuitry. The SynchLink node clock has a 1µS resolution and serves as the system clocking mechanism.

SynchLink System

A control system consisting of a set of nodes connected via a fiber optic cable system.

SynchLink Update

Each SynchLink Update takes 50µS. During each SynchLink Update, the module transmits all direct words once, and one or two buffered words, depending on the communications format.

Synchronize

A process where multiple devices operate at the same time or maintain a matching time reference.

Time master

A device (e.g. SynchLink module) that is configured to establish the time reference for a ControlLogix chassis or SynchLink system.

Time relay

A device that is configured to pass a time reference between a ControlLogix chassis backplane and a SynchLink fiber.

Time slave

A device (e.g. SynchLink module) that is configured to receive the time reference from the CST Time Master (located in a ControlLogix chassis) or upstream node in a SynchLink system.

Timestamp

A ControlLogix process that stamps a change in input data with a time reference of when the change occurred.

Topology

The physical arrangement of SynchLink nodes. Each arrangement is designed to best fit particular SynchLink applications. The following topologies are available in SynchLink.

- Star Topology
- Daisy Chain Topology
- Ring Topology

Transmit port communications format

The communications format used in a ControlLogix SynchLink module for all data the module transmits on its fiber optic transmit port.

V-Scan

The Drive module performs a V-Scan every 500µS. During the V-Scan, the module updates the parameters linked to the transmit words, and reads the receive words linked to control parameters. After each V-Scan the module performs nine SynchLink updates.

Numerics

1751-SL4SP Specifications A-6
1751-SLBA Specifications A-7
1751-SLBP Specifications A-8
1756-DMxxx Series Module 3-3
1756-DMxxx Series Specifications A-3
1756-SYNCH Module 3-1
1756-SYNCH Specifications A-1

A

Attaching Unterminated Fiber Cable
Directly 8-6
Indirectly 8-6
Axis Data 1-7, 1-9
Passing to the next node 1-7
Transmitting with the SynchLink module 3-2, 4-3

B

Base Block 3-7, 7-2, 7-4
Beacon Signal 1-3, 1-4, 1-5
Buffered Data 1-7
Transmitting to the next node 1-7
Transmitting with the drive module 3-4
Transmitting with the PowerFlex 700S drive 3-5
Transmitting with the SynchLink module 3-2
Bypass Switch 3-8, 7-2, 7-4

C

CE Certification
Drive module 3-4
SynchLink module 3-2
Center Node
In a daisy chain topology 2-3
In a ring topology 2-4
Chemical Isolation for Fiber Optic Cable 8-4
Class I Division 2 Certification
Drive module 3-4
SynchLink module 3-2
Conduit
As affects fiber optic cable installation 8-7
Configuring SynchLink 3-11
Using DriveExecutive 2-1
Using RSLogix 5000 2-1
ControlLogix Clock
Using the CST 1-4, 1-5
Coordinated System Time 1-4, 1-5
Usage in the drive module 4-4
Usage in the SynchLink module 4-2
With a SynchLink time relay 4-3, 4-4
Working with the SynchLink node clock 1-5
CSA Certification
Drive module 3-4
SynchLink module 3-2

D

Daisy Chain Topology 2-3
Available configurations 4-9
Data Transfer
Axis data 1-7, 1-9
Buffered data 1-7
Data that can be transferred on SynchLink 1-6
Direct data 1-6
Direct words 1-8
Multiplier 1-8
Multiplier overflow 1-9
On SynchLink 1-6
Data Transfer on SynchLink
Axis data 3-2
Buffered data 3-2, 3-4, 3-5
Direct data 3-2, 3-4, 3-5
Drive module 3-4
PowerFlex 700S drive 3-5
SynchLink module 3-2
Direct Data 1-6
Transmitting direct words 1-8
Transmitting to the next node
Transmitting Data on SynchLink
Transmitting direct data 1-6
Transmitting with the drive module 3-4
Transmitting with the PowerFlex 700S drive 3-5
Transmitting with the SynchLink module 3-2

Direct Words 1-8

Directly Attaching Unterminated Cable 8-6

Documentation
- Drive module 3-4
- For related products Preface-3, 7-4
- PowerFlex 700S drive 3-6
- SynchLink module 3-2

Drive Executive 3-11

Drive Module 3-3
- Agency certificatons 3-4
- Available modules 3-3
- Connected to the Reliance Electric Distributed Power System 3-3
- RIUP 3-4
- Transmitting data 3-4
- Using the CST 4-4
- Using the SynchLink node clock 4-3

Drive Tools 2000 Suite 3-11

DriveExecutive 2-1

DriveTools 2000 2-1

Duct
- As affects fiber optic cable installation 8-7

E

End Node
- In a daisy chain topology 2-3
- In a ring topology 2-4
- In a star topology 2-2

F

Fiber Blocks
- Guidelines for installing 7-3
- Installing 7-5

Fiber Optic Cable 3-10
- Analyzing your application 5-2
- Assemblies B-4
- Cable construction B-2
- Chemical isolation 8-4
- Complete listing of system products 7-2
- Estimating cable length 6-4
- Example system 5-1
- Features and benefits B-1
- Guidelines 8-2
- Indentifying system components 5-4
- Installing conduit and duct 8-7
- Measuring power loss across the system 9-2
- Physical isolation 8-5
- Planning system installation 5-4
- Powering the system 5-5
- Preterminated fiber cables 7-2
- Protecting the cable 8-4
- System maintenance 9-1
- Thermal isolation 8-4
- Usage warnings 7-1
- Using preterminated cable 8-5
- Using unterminated cables 8-6
- Vertical installation 8-9

G

Guidelines for Handling Fiber Optic Cable 8-2

Guidelines for Installing Fiber Blocks 7-3

H

Host Controller Intervention
- when passing data to the next node 1-7

Hub 1-3, 2-2, 3-7, 7-4, 7-5

I

Indirectly Attaching Unterminated Cable 8-6

Inspecting Preterminated Cables 8-5

Installing Conduit
- For fiber optic cable 8-7

Installing Duct
- For fiber optic cable 8-7

Installing Fiber Blocks 7-5

Installing Fiber Optic Cables 7-1
- Guidelines 7-3
- Planning installation 5-4
- Vertically 8-9

Installing Preterminated Fiber Cables 8-5

Isolation
- Chemical isolation for fiber optic cables 8-4

Physical isolation for fiber optic cables 8-5
Thermal isolation for fiber optic cables 8-4

M

Maintenance of Fiber Optic Cable System 9-1
Master Clock 1-2, 1-3
Master Node 2-1
In a daisy chain topology 2-3
In a ring topology 2-4
In a star topology 2-2
Measuring Power Loss
In a fiber optic cable system 9-2
Multiplier 1-8
Multiplier overflow 1-9

N

Networks
Using typical networks with SynchLink 6-1

P

Physical Isolation for Fiber Optic Cables 8-5
Power Loss
Measuring in a fiber optic cable system 9-2
Power Module Interface Controller 3-3, 3-4
PowerFlex 700S Drive 3-5
Transmitting data 3-5
Using the SynchLink node clock 4-5
PowerFlex 700S Drives Specifications A-4
Preterminated Fiber Cables 7-2
Cable inspection 8-5
Cable pulling 8-5
Cable testing 8-5
Installing 8-5
Protecting Fiber Optic Cables 8-4
Pulling Preterminated Fiber Cables 8-5

R

Reliance Electric Distributed Power System 3-4
Connecting to the drive module 3-3
Removal and Insertion Under Power (RIUP)
Drive module 3-4
SynchLink module 3-2
Ring Topology 2-4
Available configurations 4-13
RSLogix 5000 2-1, 3-11

S

Specifications
1751-SL4SP splitter A-6
1751-SLBA base block A-7
1751-SLBP bypass switch A-8
1756-DMxxx series modules A-3
1756-SYNCH module A-1
PowerFlex 700S drives A-4
Splitter 3-7, 7-2
Star Topology 1-3, 2-2
Available configurations 4-6
SynchLink Functionality Across Devices 4-2
SynchLink Hub 3-7, 7-4, 7-5
SynchLink Module 3-1
Agency certificatons 3-2
RIUP 3-2
Transmitting data 3-2, 4-3
Using the CST 4-2
Using the SynchLink node clock 4-2
SynchLink Node Clock 1-2, 1-3, 1-4, 1-5
Usage with the drive module 4-3
Usage with the PowerFlex 700S drive 4-5
Usage with the SynchLink module 4-2
Working with the CST 1-5
SynchLink Time Master 1-3, 1-4
Daisy chain topology 2-3
Star topology 2-2
SynchLink Time Relay 4-3, 4-4
SynchLink Time Slave 1-3, 1-4
SynchLink Topologies 2-1

Additional configurations 4-15
Daisy chain topology 2-3
Ring topology 2-4
Star topology 2-2

T

Testing Preterminated Cables 8-5

Thermal Isolation for Fiber Optic Cables 8-4

Time Master 1-3, 1-4

Time Slave 1-3, 1-4

Time Synchronization 1-2, 1-3
Beacon signal 1-3, 1-4, 1-5
CST and SynchLink node clock working together 1-5
SynchLink node clock 1-2, 1-3, 1-4, 1-5
Time master 1-3, 1-4
Time slave 1-3, 1-4

Transferring Data
On SynchLink 1-6

Transmitting Data on SynchLink
Transmitting axis data 1-7, 1-9
Transmitting buffered data 1-7
Transmitting direct data 1-8
Transmitting the multiplier 1-8
Transmitting the multiplier overflow 1-9
With the drive module 3-4
With the PowerFlex 700S drive 3-5
With the SynchLink module 3-2

Troubleshooting
Fiber optic cable system 9-1

U

UL Certification
Drive module 3-4
SynchLink module 3-2

Universal Drive Controller 3-3

Unterminated Fiber Cable 8-6
Direct attachment 8-6
Indirect attachment 8-6

V

Vertical Installation
Of fiber optic cable 8-9

How Are We Doing?

Your comments on our technical publications will help us serve you better in the future.
Thank you for taking the time to provide us feedback.

You can complete this form and mail it back to us, visit us online at www.ab.com/manuals, or email us at RADocumentComments@ra.rockwell.com

Pub. Title/Type SynchLink™

Cat. No.	1756-SYNCH, 1756-DMxxx Series, PowerFlex 700S	Pub. No.	1756-TD008A-EN-P	Pub. Date	August 2002	Part No.	957395-60

Please complete the sections below. Where applicable, rank the feature (1=needs improvement, 2=satisfactory, and 3=outstanding).

Overall Usefulness	1	2	3	How can we make this publication more useful for you?
Completeness (all necessary information is provided)	1	2	3	Can we add more information to help you? procedure/step illustration feature example guideline other explanation definition
Technical Accuracy (all provided information is correct)	1	2	3	Can we be more accurate? text illustration
Clarity (all provided information is easy to understand)	1	2	3	How can we make things clearer?
Other Comments				You can add additional comments on the back of this form.

Your Name

Your Title/Function

Location/Phone

Would you like us to contact you regarding your comments?

___No, there is no need to contact me

___Yes, please call me

___Yes, please email me at _____

___Yes, please contact me via _____

Return this form to: Allen-Bradley Marketing Communications, 1 Allen-Bradley Dr., Mayfield Hts., OH 44124-9705

Phone: 440-646-3176 Fax: 440-646-3525 Email: RADocumentComments@ra.rockwell.com

PLEASE FASTEN HERE (DO NOT STAPLE)

Other Comments

PLEASE FOLD HERE

PLEASE REMOVE

NO POSTAGE
NECESSARY
IF MAILED
IN THE
UNITED STATES

BUSINESS REPLY MAIL

FIRST-CLASS MAIL PERMIT NO. 18235 CLEVELAND OH

POSTAGE WILL BE PAID BY THE ADDRESSEE

Rockwell Automation

1 ALLEN-BRADLEY DR
MAYFIELD HEIGHTS OH 44124-9705

ControlLogix, DriveExecutive, DriveTools, PowerFlex, SynchLink and RSLogix 5000 are trademarks of Rockwell Automation.

www.rockwellautomation.com

Power, Control and Information Solutions Headquarters

Americas: Rockwell Automation, 1201 South Second Street, Milwaukee, WI 53204-2496 USA, Tel: (1) 414.382.2000, Fax: (1) 414.382.4444
Europe/Middle East/Africa: Rockwell Automation, Vorstlaan/Boulevard du Souverain 36, 1170 Brussels, Belgium, Tel: (32) 2 663 0600, Fax: (32) 2 663 0640
Asia Pacific: Rockwell Automation, Level 14, Core F, Cyberport 3, 100 Cyberport Road, Hong Kong, Tel: (852) 2887 4788, Fax: (852) 2508 1846

Publication 1756-TD008A-EN-P - August 2002

PN 957707-27

Copyright © 2002 Rockwell Automation. All rights reserved. Printed in the U.S.A.