This manual links to Knowledgebase Technote: Kinetix 5700 Servo Drive Fault Codes; download the spreadsheet for offline access.

Kinetix 5700 Servo Drives

Catalog Numbers 2198-P031, 2198-P070, 2198-P141, 2198-P208, 2198-RP088, 2198-RP200, 2198-RP263, 2198-RP312, 2198-D006-ERS3, 2198-D012-ERS3, 2198-D020-ERS3, 2198-D032-ERS3, 2198-D057-ERS3, 2198-S086-ERS3, 2198-S130-ERS3, 2198-S160-ERS3, 2198-S263-ERS3, 2198-S312-ERS3, 2198-D006-ERS4, 2198-D012-ERS4, 2198-D020-ERS4, 2198-D032-ERS4, 2198-D057-ERS4, 2198-S086-ERS4, 2198-S130-ERS4, 2198-S160-ERS4, 2198-S263-ERS4, 2198-S312-ERS4, 2198T-W25K-ER, 2198-CAPMOD-2240, 2198-CAPMOD-DCBUS-IO, 2198-DCBUSCOND-RP312

Allen-Bradley
by ROCKWELL AUTOMATION

User Manual

Original Instructions

Important User Information

Read this document and the documents listed in the additional resources section about installation, configuration, and operation of this equipment before you install, configure, operate, or maintain this product. Users are required to familiarize themselves with installation and wiring instructions in addition to requirements of all applicable codes, laws, and standards.

Activities including installation, adjustments, putting into service, use, assembly, disassembly, and maintenance are required to be carried out by suitably trained personnel in accordance with applicable code of practice.

If this equipment is used in a manner not specified by the manufacturer, the protection provided by the equipment may be impaired.

In no event will Rockwell Automation, Inc. be responsible or liable for indirect or consequential damages resulting from the use or application of this equipment.

The examples and diagrams in this manual are included solely for illustrative purposes. Because of the many variables and requirements associated with any particular installation, Rockwell Automation, Inc. cannot assume responsibility or liability for actual use based on the examples and diagrams.

No patent liability is assumed by Rockwell Automation, Inc. with respect to use of information, circuits, equipment, or software described in this manual.

Reproduction of the contents of this manual, in whole or in part, without written permission of Rockwell Automation, Inc., is prohibited.

Throughout this manual, when necessary, we use notes to make you aware of safety considerations.

WARNING: Identifies information about practices or circumstances that can cause an explosion in a hazardous environment, which may lead to personal injury or death, property damage, or economic loss.

ATTENTION: Identifies information about practices or circumstances that can lead to personal injury or death, property damage, or economic loss. Attentions help you identify a hazard, avoid a hazard, and recognize the consequence.

IMPORTANT Identifies information that is critical for successful application and understanding of the product.

Labels may also be on or inside the equipment to provide specific precautions.

SHOCK HAZARD: Labels may be on or inside the equipment, for example, a drive or motor, to alert people that dangerous voltage may be present.

BURN HAZARD: Labels may be on or inside the equipment, for example, a drive or motor, to alert people that surfaces may reach dangerous temperatures.

ARC FLASH HAZARD: Labels may be on or inside the equipment, for example, a motor control center, to alert people to potential Arc Flash. Arc Flash will cause severe injury or death. Wear proper Personal Protective Equipment (PPE). Follow ALL Regulatory requirements for safe work practices and for Personal Protective Equipment (PPE).

Preface

Summary of Changes 11
Access Fault Codes 11
Download Firmware, AOP, EDS, and Other Files. 12
Conventions Used in This Manual 12
CIP Security 12
Additional Resources 13

Start

Chapter 1

Kinetix 5700 Servo Drives Series Change. 16
About the Kinetix 5700 Servo Drive System 16
DC-bus Power Supply Input Power Configurations. 19
Typical DC-bus Power Supply Configuration Example 19
Multiple DC-Bus Power Supply Configuration Example. 20
Extended DC-bus Configuration Example. 21
iTRAK Power Supply Configuration Example 22
Regenerative Bus Supply Input Power Configurations. 23
Typical Regenerative Bus Configuration Examples 23
Extended Regenerative Bus Configuration Example 26
8720MC-RPS Power Supply Input Power Configuration. 27
Motor and Auxiliary Feedback Configurations 28
Typical Communication Configurations. 29
Linear Topology. 29
Ring Topology 30
Star Topology 31
Functional Safety Configurations. 32
Hardwired Configuration 32
Integrated Safety Configurations. 33
Safe Stop and Safe Monitor Configurations. 35
Catalog Number Explanation 36
Agency Compliance 37

Plan the Kinetix 5700 Drive System Installation

Chapter 2

System Design Guidelines. 39
System Mounting Requirements 39
DC-bus Voltage Regulation 40
AC Line Filter Selection 42
AC Line Impedance Considerations 43
Circuit Breaker/Fuse Selection 46
24V Control Power Evaluation 47
Contactor Selection 48
Passive Shunt Considerations. 49
Active Shunt Considerations 50
Enclosure Selection 52
Minimum Clearance Requirements 54

Multi-axis Shared DC-Bus Configurations. 56
Accessory Module Selection 57
DC-bus Power Supply Systems 57
Regenerative Bus Supply Systems 59
8720MC-RPS or Other Regenerative Power Supply 62
Accessory Module Flowcharts 63
Electrical Noise Reduction 65
HF Bond for Modules 65
HF Bond for Multiple Subpanels 67
Establish Noise Zones. 68
Cable Categories for Kinetix 5700 Systems 70
Noise Reduction Guidelines for Drive System Accessories. 71

Chapter 3

Mount the Kinetix 5700 Drive System

Determine Mounting Order 78
Mount Accessory Modules 81
Zero-stack Tab and Cutout 82
Install Shared-bus Connection Systems 82
DC-bus Connection System. 82
24V Input Power Connection System 83
Drill-hole Patterns 85
Drill-hole Pattern Calculations 86
Drill-hole Patterns by Using the System Mounting Toolkit . . . 88
Mount Your Kinetix 5700 Drive Modules. 88

Chapter 4

Connector Data and Feature Descriptions

Kinetix 5700 Connector Data. 92
Safe Torque-off Connector Pinout. 100
Input Power Connector Pinouts 100
DC Bus and Shunt Resistor Connector Pinouts 101
Digital Inputs Connector Pinouts. 101
Ethernet Communication Connector Pinout 103
Motor Power, Brake, and Feedback Connector Pinouts 103
Motor Feedback Connector Pinouts 104
Universal Feedback Connector Pinouts 105
Accessory Module Pinouts 105
Understand Control Signal Specifications 106
Digital Inputs 106
Ethernet Communication Specifications 107
Contactor Enable Relay 108
Converter OK Relay 109
Motor Brake Circuit 109
Control Power 111
Feedback Specifications. 112
Encoder Feedback Supported on the DSL Feedback Connector. 112

Encoder Feedback Supported on the UFB Feedback Connector 112
Auxiliary Feedback Specifications 115
Encoder Phasing Definitions 117
Absolute Position Feature 119
Functional Safety Features 120
Hardwired STO Mode 120
Integrated Mode 120

Chapter 5

Connect the Kinetix 5700 Drive System

Basic Wiring Requirements 122
Routing the Power and Signal Cables 122
Input Power Configurations for Kinetix 5700 Power Supplies . . . 123
DC-bus Power Supply 123
Regenerative Bus Supply 126
Ground Screw/Jumper Settings 129
Kinetix 5700 Drive System Power Supply 129
Kinetix 5700 Inverters 130
Kinetix 5700 iTRAK Power Supply 131
Remove/Install the Ground Screw/Jumper 131
Ground the Drive System 134
Ground the System Subpanel 134
Ground Multiple Subpanels 135
Wiring Requirements 136
Wiring Guidelines 140
Wire the Power Connectors 140
Wire the 24V Control Power Input Connector 140
Wire the Input Power Connector 142
Wire the Contactor Enable Connector 143
Wire the Digital Input Connectors 144
2198-*xxxx*-ERS3 (series A) Connector Plugs 144
2198-*xxxx*-ERS4 and 2198-*xxxx*-ERS3 (series B) Connector Plugs 145
Wire the Safe Torque-off Connector 145
Wire the Digital Inputs Connector 146
Wire Motor Power and Brake Connectors 147
Maximum Cable Lengths 150
Connect Single Cables 154
Motor Feedback Connections 155
Apply the Single Motor Cable Shield Clamp 156
Connect Power/Brake and Feedback Cables 158
Motor Power and Brake Cables 158
Motor Power/Brake Cable Series Change 159
Dual-axis Inverter Power/Brake Cable Installation 160
Single-axis Inverter Power/Brake Cable Installation 163
Motor Feedback Connections 167
Customer-supplied Motor Power Cables 173

Accessory Module Connections 176
External Passive-shunt Connections 177
External Active-shunt Connections 178
DC-bus Power Supply Active Shunt Connections 178
Regenerative Bus Supply Active Shunt Connections 178
Wire the External DC-bus Connections 179
Kinetix VPC Motors and the Extended Speed Feature 180
Considerations for Powerohm Shunt Installation 180
Ethernet Cable Connections 181

Configure and Start the Kinetix 5700 Drive System

Chapter 6

Understand the Kinetix 5700 Display 184
Menu Screens 185
Setup Screens 188
Startup Sequence 193
Configure the Drive 194
Set the Network Parameters 194
Studio 5000 Logix Designer 194
Version History 194
Install the Kinetix 5700 Add-On Profile 195
Configure the Logix 5000 Controller 196
Configure the Kinetix 5700 Drive Modules 199
Configure the DC-bus Power Supply 199
Configure the Regenerative Bus Supply 203
Configure the iTRAK Power Supply 207
Configure the Inverter Drives 212
Continue Inverter Configuration 220
Configure the Motion Group 224
Configure Regenerative Bus Supply Axis Properties 225
Configure Vertical Load Control Axis Properties 230
Configure Feedback-only Axis Properties 231
Configure Induction-motor Frequency-control Axis Properties . . 233
General and Motor Categories 233
Basic Volts/Hertz Method 235
Sensorless Vector Method 237
Fan/Pump Volts/Hertz Method 240
Configure IPM Motor Closed-loop Control Axis Properties 242
Configure SPM Motor Closed-loop Control Axis Properties 246
Configure Induction-motor Closed-loop Control Axis Properties 251
Configure Feedback Properties 258
Configure Module Properties 258
Configure Axis Properties 260
Download the Program 263
Apply Power to the Kinetix 5700 Drive System 264
Understand Bus-sharing Group Configuration 265
Bus-sharing Group Example 266
Configure Bus-sharing Groups 267

Test and Tune the Axes 268
Test the Axes 269
Tune the Axes 271

Chapter 7

Troubleshoot the Kinetix 5700 Drive System

Safety Precautions 273
Interpret Status Indicators 274
Display Interface 274
Fault Code Overview 274
Fault Codes 275
SAFE FLT Fault Codes 275
Kinetix 5700 Status Indicators 276
Kinetix 5700 Accessory Module Status Indicators 277
Axis Troubleshooting 278
Regenerative Bus Supply Troubleshooting 279
Logix 5000 Controller and Drive Module Behavior 281
DC-bus Power Supply Behavior 282
Regenerative Bus Supply Behavior 284
iTRAK Power Supply Behavior 286
Inverter Behavior 287

Chapter 8

Remove and Replace Drive Modules

Before You Begin 293
Remove and Replace Kinetix 5700 Drive Modules 294
Remove Power and All Connections 294
Remove the Drive Module 298
Replace the Drive Module 299
Start and Configure the Drive Module 300
Replacing 2198-xxxx-ERS3 (series A) Drives with Series B Drives 300

Chapter 9

Kinetix 5700 Safe Torque-off Function

Overview 303
Certification 304
Average Frequency of a Dangerous Failure 305
Safe Torque-off Feature 305
Out of Box State 306
Safe Torque-off Status 309
Explicit Messages 310
Hardwired Safe Torque-off 312
Compatible Controllers 312
Description of Operation 312
Troubleshoot the Safe Torque-off Function 314
Safe Torque-off Connector Data 316
Wire the Safe Torque-off Circuit 317
Safe Torque-off Wiring Requirements 319

Safe Torque-off Feature Bypass 320
Cascade the Safe Torque-off Signal. 320
Hardwired Safe Torque-off Electrical Specifications 322
Integrated Safe Torque-off 322
Compatible Safety Controllers. 323
Safety Application Requirements 323
Description of Operation 324
Safe Torque-off Assembly Tags 324
STO Fault Reset. 327
Troubleshoot the Safe Torque-off Function 328
Understand Integrated Safety Drive Replacement 329
Replace an Integrated Safety Drive in a GuardLogix System . . 330
Motion Direct Commands in Motion Control Systems. 331
Integrated Safe Torque-off Specifications 338

Appendix A

Interconnect Diagrams

Interconnect Diagram Notes 341
Power Wiring Examples 343
Capacitor Module Status Wiring Example. 357
DC-bus Conditioner Module Status Wiring Example 357
Contactor Wiring Examples 358
Passive Shunt Wiring Examples 359
Active Shunt Wiring Examples 360
Kinetix 5700 Servo Drive and Rotary Motor Wiring Examples. . . 362
Kinetix 5700 Servo Drive and Linear Actuator Wiring Examples. 367
System Block Diagrams 373

Appendix B

Upgrade the Drive Firmware

Before You Begin. 381
Inhibit the Module 383
Upgrade Your Firmware 383
Use ControlFLASH Plus Software to Upgrade Your Drive Firmware 384
Use ControlFLASH Software to Upgrade Your Drive Firmware 387
Verify the Firmware Upgrade 393

Appendix C

Size Multi-axis Shared-bus Configurations

Shared DC-bus Configurations. 395
Shared DC-bus Definitions 395
General Sizing Guidelines 397
System Sizing Guidelines. 397
Select Drive/Motor Combinations. 398
Select the Power Supply and Define the DC-bus Groups. 398
Calculate System and External-bus Capacitance 398
Calculate the Total Motor Power Cable Length. 399

Calculate 24V DC Control Power Current Demand 400
24V DC Voltage Drop Calculation Example 401
System Sizing Example 403
System Sizing Application Example 404

Appendix D

Maximum Motor Cable Lengths for Kinetix 5700 Power Supplies

DC-bus Power Supply Configurations 406
Regenerative Bus Supply Configurations 409
Third-party Motor Configurations 410
DC-bus Power Supply Configurations 410
Regenerative Bus Supply Configurations 412

Appendix E

Regenerative Bus Supply Sequence Operation

Converter Startup Method - Enable Request 414
Initialization 414
Precharge 415
Start Inhibited 415
Stopped 416
Starting 416
Running 416
Converter Startup Method - Automatic 417
Sequence Operation of Discharging 418

Appendix F

Motor Control Feature Support

Frequency Control Methods 420
Basic Volts/Hertz 421
Basic Volts/Hertz for Fan/Pump Applications 422
Sensorless Vector 423
Current Limiting for Frequency Control 424
The Effects of Current Limiting 424
Enable the Current Limiting Feature 426
Set the CurrentVectorLimit Attribute Value 426
Stability Control for Frequency Control 427
Enable the Stability Control Feature 428
Skip Speeds 429
Multiple Skip Speeds 430
Flux Up 431
Flux Up Attributes 432
Configure the Flux Up Attributes 433
Current Regulator Loop Settings 434
Motor Category 434
Motor Tests and Autotune Procedure 436
Motor Analyzer Category Troubleshooting 437
Selection of Motor Thermal Models 440
Generic Motors 440
Thermally Characterized Motors 441

Speed Limited Adjustable Torque (SLAT) 442
Motion Polarity Setting 442
SLAT Min Speed/Torque 443
SLAT Max Speed/Torque 444
SLAT Attributes 444
Configure the Axis for SLAT 445
Motion Drive Start (MDS) Instruction 448
Motion Overload Retention 453
Phase Loss Detection 454
Phase-loss Detection Attributes 454
Phase-loss Detection Configuration 455
Phase Loss Detection Current Example 456
Velocity Droop 457
Closed Loop Control 457
Frequency Control 457
Velocity Droop Attribute 457
Velocity Droop Configuration 458
Commutation Self-sensing Startup 458
Commutation Test 460
Adaptive Tuning 460
Virtual Torque Sensor 461
Field Weakening Mode 462
Extended Speed Feature 462
Configure Extended Speed Operation 463

Appendix G

History of Changes

History of Changes 465

Index 469

This manual provides detailed installation instructions for mounting and wiring your Kinetix® 5700 power supplies, single-axis inverters, dual-axis inverters, and accessory modules. Also included is system configuration with the Studio 5000 Logix Designer® application, integration of your drive modules with a Logix 5000™ controller, system startup, and troubleshooting.

Also provided in this manual are installation instructions for mounting and wiring input power for your iTRAK® power supply. For wiring iTRAK digital inputs, outputs to the motor modules, and startup, troubleshooting, and commissioning with the AOI, see iTRAK System with TriMax Bearings User Manual, publication 2198T-UM002, or iTRAK 5730 System User Manual, publication 2198T-UM003.

This manual is intended for engineers or technicians directly involved in the installation and wiring of the Kinetix 5700 drive modules, and programmers directly involved in the operation, field maintenance, and integration of these modules with the EtherNet/IP™ communication module or controller.

Summary of Changes

This publication contains the following new or updated information. This list includes substantive updates only and is not intended to reflect all changes.

Topic	Page
Updated the DC-bus power supply input-power range and shared DC power range to include 240V AC (nom) operation (firmware revision 13.001 or later).	36 and throughout
Added drive/motor compatibility for Kinetix VPL, VPF, and VPH 200V-class servo motors and Kinetix 5700 drives with 240V AC (nom) input power.	Throughout
Added drive/motor compatibility for Kinetix MPL, MPM, MPF, and MPS 200V-class servo motors and Kinetix 5700 drives with 240V AC (nom) input power.	Throughout
Added Bulletin 842E-CM and 843ES EtherNet/IP absolute external encoders.	116, 117
Updated the iTRAK ground-screw setting stating that only the 2198-P*xxx* DC-bus power supply is compatible for use with the iTRAK power supply.	131 and Throughout
Updated Tune the Axes with load observer and adaptive tuning (tuningless) features.	271
Added FLT M05 - FDBK Battery Loss and FLT M06 - FDBK Battery Low fault codes to the Kinetix 5700 inverter module behavior.	292
Added ControlFLASH Plus™ software as an option for firmware upgrades.	381
Added maximum drive-to-motor cable lengths for 240V AC drive operation to Appendix D.	408
Added the Commutation Self-sensing Startup feature to Appendix F.	458
Added the Virtual Torque Sensor feature to Appendix F.	461
Added the History of Changes appendix.	465

Access Fault Codes

For Kinetix 5700 fault code descriptions and possible solutions, see the Knowledgebase Technote: Kinetix 5700 Servo Drives Fault Codes. You can download the spreadsheet from this public article.

You will be asked to log in to your Rockwell Automation web account or create an account if you do not have one. You do not need a support contract to access this article.

Download Firmware, AOP, EDS, and Other Files

Download firmware, associated files (such as AOP, EDS, and DTM), and access product release notes from the Product Compatibility and Download Center at rok.auto/pcdc.

Conventions Used in This Manual

These conventions are used throughout this manual:

- Bulleted lists such as this one provide information, not procedural steps
- Numbered lists provide sequential steps or hierarchical information
- When catalog number 2198-*xxxx*-ERS3 appears in this publication without series designation, the topic applies to series A and B drives

IMPORTANT Throughout this publication, when the Kinetix 5700 inverter catalog number ends in -ERS*x*, for example 2198-D057-ERS*x*, the variable (x) indicates that the inverter (using this example) can be 2198-D057-ERS3 or 2198-D057-ERS4.

- The 2198-CAPMOD-2240 capacitor module, 2198-CAPMOD-DCBUS-IO extension module, and 2198-DCBUSCOND-RP312 DC-bus conditioner module are collectively referred to as accessory modules

CIP Security

CIP Security™ is a standard, open-source communication method that helps to provide a secure data transport across an EtherNet/IP network. It lets CIP-connected devices authenticate each other before transmitting and receiving data.

CIP Security uses the following security properties to help devices protect themselves from malicious communication:

- Device Identity and Authentication
- Data Integrity and Authentication
- Data Confidentiality

Rockwell Automation uses the following products to implement CIP Security:

- FactoryTalk® Services Platform, version 6.11 or later, with the following components enabled:
  - FactoryTalk Policy Manager
  - FactoryTalk System Services
- FactoryTalk Linx, version 6.11 or later
- Studio 5000® Design Environment, version 32.00.00 or later
- CIP Security-enabled Rockwell Automation® products, for example, the product described in this publication

For more information on CIP Security, including which products support CIP Security, see the CIP Security with Rockwell Automation Products Application Technique, publication SECURE-AT001.

Additional Resources

These documents contain additional information concerning related products from Rockwell Automation.

Table 1 - Additional Resources

Resource	Description
Kinetix Rotary Motion Specifications Technical Data, publication KNX-TD001	Provides product specifications for Kinetix VPL, VPC, VPF, VPH, and VPS motors, Kinetix MPL, MPM, MPF, and MPS motors, and Kinetix HPK rotary motors.
Kinetix Linear Motion Specifications Technical Data, publication KNX-TD002	Provides product specifications for Kinetix MPAS and MPMA linear stages, Kinetix VPAR, MPAR, and MPAI electric cylinders, LDAT-Series linear thrusters, and LDC-Series™ linear motors.
Kinetix Servo Drives Specifications Technical Data, publication KNX-TD003	Provides product specifications for Kinetix Integrated Motion over the EtherNet/IP network, Integrated Motion over sercos interface, EtherNet/IP networking, and component servo drive families.
Kinetix Motion Accessories Specifications Technical Data, publication KNX-TD004	Provides product specifications for 2090-Series motor and interface cables, low-profile connector kits, drive power components, and other servo drive accessory items.
Kinetix 5700 Safe Monitor Functions Safety Reference Manual, publication 2198-RM001	Provides a description of integrated stopping functions and safe monitoring functions with a GuardLogix® controller and Kinetix 5700 servo drives.
iTRAK System User Manual, publication 2198T-UM001	Provides information on how to install the Kinetix 5700 iTRAK power supply with an iTRAK system and program the iTRAK system.
iTRAK System with TriMax Bearings User Manual, publication 2198T-UM002	
iTRAK 5730 System User Manual, publication 2198T-UM003	
1321 Power Conditioning Products Technical Data, publication 1321-TD001	Provides information on typical use cases, specifications, terminations, and dimensions of Bulletin 1321 line reactors.
System Design for Control of Electrical Noise Reference Manual, publication GMC-RM001	Provides information, examples, and techniques designed to minimize system failures caused by electrical noise.
Servo Drive Installation Best Practices Application Technique, publication MOTION-AT004	Best practice examples to help reduce the number of potential noise or electromagnetic interference (EMI) sources in your system and to make sure that the noise sensitive components are not affected by the remaining noise.
Kinetix 5700 Drive Systems Design Guide, publication KNX-RM010	System design guide to select the required (drive specific) drive module, power accessory, feedback connector kit, and motor cable catalog numbers for your Kinetix 5700 drive system.
Motor Nameplate Datasheet Entry for Custom Motor Applications Application Technique, publication 2198-AT002	Provides information on the use of nameplate data entry for custom induction motors and permanent-magnet motors that are used in applications with Kinetix 5700 servo drives.
Vertical Load and Holding Brake Management Application Technique, publication MOTION-AT003	Provides information on vertical loads and how the servo motor holding-brake option can be used to help keep a load from falling.
Motion System Tuning Application Technique, publication MOTION-AT005	Provides information on tuning a Kinetix drive system.
Integrated Motion on the EtherNet/IP Network Configuration and Startup User Manual, publication MOTION-UM003	Provides information on configuring and troubleshooting your ControlLogix® and CompactLogix™ EtherNet/IP network modules.
Integrated Motion on the EtherNet/IP Network Reference Manual, publication MOTION-RM003	Provides information on the AXIS_CIP_DRIVE attributes and the Studio 5000 Logix Designer application Control Modes and Methods.
GuardLogix 5570 Controllers User Manual, publication 1756-UM022	Provides information on how to install, configure, program, and use ControlLogix controllers and GuardLogix controllers in Studio 5000 Logix Designer projects.
GuardLogix 5580 Controllers User Manual, publication 1756-UM543	
Compact GuardLogix 5370 Controllers User Manual, publication 1769-UM022	Provides information on how to install, configure, program, and use CompactLogix and Compact GuardLogix controllers.
Compact GuardLogix 5380 Controllers User Manual, publication 5069-UM001	
GuardLogix 5570 and Compact GuardLogix 5370 Controller Systems Safety Reference Manual, publication 1756-RM099	Provides information on how to achieve and maintain Safety Integrity Level (SIL) and Performance Level (PL) safety application requirements for GuardLogix and Compact GuardLogix controllers.
GuardLogix 5580 and Compact GuardLogix 5380 Controller Systems Safety Reference Manual, publication 1756-RM012	
Motion Analyzer System Sizing and Selection Tool website https://motionanalyzer.rockwellautomation.com/	Comprehensive motion application sizing tool used for analysis, optimization, selection, and validation of your Kinetix Motion Control system.
EtherNet/IP Network Devices User Manual, ENET-UM006	Describes how to configure and use EtherNet/IP devices to communicate on the EtherNet/IP network.
Ethernet Reference Manual, ENET-RM002	Describes basic Ethernet concepts, infrastructure components, and infrastructure features.

Table 1 - Additional Resources (continued)

Resource	Description
CIP Security with Rockwell Automation Products Application Technique, publication SECURE-AT001.	Provides information on CIP Security, including which Rockwell Automation products support CIP Security.
System Security Design Guidelines Reference Manual, SECURE-RM001	Provides guidance on how to conduct security assessments, implement Rockwell Automation products in a secure system, harden the control system, manage user access, and dispose of equipment.
ControlFLASH User Manual, publication 1756-UM105	Provides guidance on how to use ControlFLASH™ or ControlFLASH Plus™ software to upgrade drive firmware. Refer to your product release notes to determine whether it supports firmware upgrades by using ControlFLASH or ControlFLASH Plus software.
ControlFLASH Plus Quick Start Guide, publication CFP-QS001	
Safety Guidelines for the Application, Installation, and Maintenance of Solid-State Control, publication SGI-1.1	Designed to harmonize with NEMA Standards Publication No. ICS 1.1-1987 and provides general guidelines for the application, installation, and maintenance of solid-state control in the form of individual devices or packaged assemblies incorporating solid-state components.
Industrial Automation Wiring and Grounding Guidelines, publication 1770-4.1	Provides general guidelines for installing a Rockwell Automation industrial system.
Product Certifications website, rok.auto/certifications.	Provides declarations of conformity, certificates, and other certification details.

You can view or download publications at rok.auto/literature.

Start

Use this chapter to become familiar with the Kinetix® 5700 drive system and obtain an overview of installation configurations.

Topic	Page
Kinetix 5700 Servo Drives Series Change	16
About the Kinetix 5700 Servo Drive System	16
DC-bus Power Supply Input Power Configurations	19
Regenerative Bus Supply Input Power Configurations	23
8720MC-RPS Power Supply Input Power Configuration	27
Motor and Auxiliary Feedback Configurations	28
Typical Communication Configurations	29
Functional Safety Configurations	32
Catalog Number Explanation	36
Agency Compliance	37

Kinetix 5700 Servo Drives Series Change

Single-axis and dual-axis inverters, catalog numbers 2198-*xxxx*-ERS3 (series B), include an enhancement that is not included in series A drives, but that is included in 2198-*xxxx*-ERS4 drives.

- The drive-based (Monitored SS1 and Timed SS1) stopping functions and controller-based monitoring functions apply to the 2198-*xxxx*-ERS4 drives
- The drive-based Timed SS1 stopping function and STO with configurable delay applies to the 2198-*xxxx*-ERS3 (series B) drives
- When catalog number 2198-*xxxx*-ERS3 appears in this publication without series designation, the topic applies to series A and B drives

Table 2 - Integrated Functional Safety Support

Integrated Safety Over the EtherNet/IP™ Network	Safety Function	Dual-axis Inverters Cat. No.	Single-axis Inverters Cat. No.	Minimum Controller (1) Required
Drive-based stopping functions	Timed Safe Stop 1 (SS1)	2198-D*xxx*-ERS3 (series B) 2198-D*xxx*-ERS4	2198-S*xxx*-ERS3 (series B) 2198-S*xxx*-ERS4	• GuardLogix® 5580 • CompactLogix™ 5380
	Monitored Safe Stop 1 (SS1)	2198-D*xxx*-ERS4	2198-S*xxx*-ERS4	
Controller-based stopping functions	• Monitored Safe Stop 1 (SS1) • Safe Stop 2 (SS2)			
Controller-based monitoring functions	• Safe Operational Stop (SOS) • Safely Limited Speed (SLS) • Safety Limited Position (SLP) • Safe Direction (SDI)			
Safety feedback function	Safety Feedback Interface (SFX)			
Integrated STO mode	Safe Torque-off (STO)	2198-D*xxx*-ERS4	2198-S*xxx*-ERS4	
		2198-D*xxx*-ERS3	2198-S*xxx*-ERS3	• ControlLogix® 5570 • CompactLogix 5370

(1) Where a ControlLogix or CompactLogix (non-safety) controller is specified, a GuardLogix or Compact GuardLogix controller is backwards compatible. Also, GuardLogix 5580 and Compact GuardLogix 5380 controllers are backwards compatible with GuardLogix 5570 and Compact GuardLogix 5370 controllers.

About the Kinetix 5700 Servo Drive System

The Kinetix 5700 drive modules are zero-stacked and use the shared-bus connection system to extend power from one drive module to another. Systems are designed to support Integrated Motion over the EtherNet/IP network.

Table 3 - Kinetix 5700 Drive System Overview

Drive System Component	Cat. No.	Description
Kinetix 5700 DC-bus Power Supply	2198-P*xxx*	Converter power supply with 200V and 400V-class (three-phase) AC input. Provides output current in a range of 10.5…69.2 A. Systems typically consist of one module, however, up to three modules in parallel is possible. Parallel modules increase available power for Bulletin 2198 single-axis and dual-axis inverters.
Kinetix 5700 Regenerative Bus Supply	2198-RP*xxx*	Regenerative bus supply with 400V-class (three-phase) AC input provides continuous output power and current to Bulletin 2198 single-axis and dual-axis inverters for applications with requirements in the range of 24…140 kW and 35…207 A, output current.
Kinetix 5700 Single-axis Servo Drives	2198-S*xxx*-ERS3	Single-axis inverters with current ratings up to 192 A rms. Drives feature TÜV Rheinland certified safe torque-off function with hardwired and integrated safety connection options, PL e and SIL 3 safety ratings, and support for Hiperface DSL, Hiperface, and EnDat encoder feedback. 2198-S*xxx*-ERS3 (series B) drives also support Timed SS1 drive-based stopping functions.
	2198-S*xxx*-ERS4	Single-axis inverters with the same power structure and encoder feedback support as -ERS3 inverters, plus support for Monitored SS1 and Timed SS1 drive-based stopping functions. Also, support for controller-based safe stop and safe monitor functions over the EtherNet/IP network.

Table 3 - Kinetix 5700 Drive System Overview (continued)

Drive System Component	Cat. No.	Description
Kinetix 5700 Dual-axis Servo Drives	2198-D*xxx*-ERS3	Dual-axis inverters with current ratings up to 23 A rms. Drives feature TÜV Rheinland certified safe torque-off function with hardwired and integrated safety connection options, PL e and SIL 3 safety ratings, and support for Hiperface DSL, Hiperface, and EnDat encoder feedback. 2198-D*xxx*-ERS3 (series B) drives also support Timed SS1 drive-based stopping functions.
	2198-D*xxx*-ERS4	Dual-axis inverters with the same power structure and encoder feedback support as -ERS3 inverters, plus support for Monitored SS1 and Timed SS1 drive-based stopping functions. Also, support for controller-based safe stop and safe monitor functions over the EtherNet/IP network.
Kinetix 5700 iTRAK Power Supply	2198T-W25K-ER	DC-DC converter that generates DC-bus power for iTRAK® systems.
Kinetix 5700 Capacitor Module	2198-CAPMOD-2240	Use for energy storage, external active-shunt connection, and to extend the DC-bus voltage to another inverter cluster. Modules are zero-stacked with servo drives and use the shared-bus connection system to extend the external DC-bus voltage in applications up to 104 A. Can parallel with itself or with another accessory module for up to 208 A with required 2198-KITCON-CAPMOD2240 kit that includes flexible bus-bars.
Kinetix 5700 Extension Module	2198-CAPMOD-DCBUS-IO	The extension module, paired with a capacitor module or DC-bus conditioner module, is used to extend the DC-bus voltage to another inverter cluster in systems with ≥104 A current and up to 208 A.
Kinetix 5700 DC-bus Conditioner Module	2198-DCBUSCOND-RP312	Decreases the voltage stress on insulation components in an inverter system and used to extend the DC-bus voltage to another inverter cluster. Modules are zero-stacked with servo drives and use the shared-bus connection system to extend the external DC-bus voltage in applications up to 104 A. Can parallel with itself or with another accessory module for up to 208 A with required 2198-KITCON-DCBUSCOND kit that includes flexible bus-bars.
8720MC Regenerative Power Supply	8720MC-RPS*xxx*	Sinusoidal PWM converter that can control the increase of DC-bus voltage and perform continuous power generation for one or more servo drives in multi-axis DC common-bus configurations.
Shared-bus Connector Kits	2198-TCON-24VDCIN36 2198-*xxxx*-P-T 2198-BARCON-*xx*DCAC100	24V input wiring connectors, T-connectors, and bus-bars for most Kinetix 5700 drive modules that use the 24V shared-bus connection system (optional).
	2198T-W25K-P-IN 2198T-W25K-P-T	24V input wiring connector, T-connector, and bus-bar for the iTRAK motor module and other select Kinetix 5700 drive modules that use the 24V shared-bus connection system (optional).
	2198-BARCON-*xx*DC200 2198-KITCON-ENDCAP200	DC-bus links (55, 85, 100, and 220 mm) and end caps for the DC-bus shared-bus connection system (required and included with each respective drive module). DC-bus links (165, 275, and 440 mm) are optional and do not ship with any modules.
DSL Feedback Connector Kit	2198-KITCON-DSL	Replacement DSL motor feedback connector kit with 2-pin connector plug and grounding plate inside the connector housing. Supports Kinetix VPL, VPC-Q, VPH, VPF, VPS rotary motors. Included with 2090-CS*x*M1DE motor cables. Must be purchased separately when used with 2090-CS*x*M1DG motor cables.
Universal Feedback Connector Kit	2198-K57CK-D15M	Universal feedback connector kit for motor and auxiliary feedback connections with the 15-pin connector plug and grounding plate inside the connector housing. Supports Kinetix MPL, MPM, MPF, MPS, Kinetix HPK rotary motors, Kinetix MPAS, MPMA, MPAR, MPAI linear actuators, LDAT-Series linear thrusters, and LDC-Series™ linear motors.
Hiperface to DSL Converter Kit	2198-H2DCK (series B or later)	Provides Hiperface-to-DSL feedback conversion for use with compatible motors and actuators.
Kinetix 5700 System Mounting Toolkit	2198-K5700-MOUNTKIT	Use to position the drive modules and identify drill-holes for mounting your Kinetix 5700 servo drive system.
Kinetix 5700 Cable Clamp Spacer Kit	2198-K5700-CLAMPSPACER	Replacement cable clamp spacers for 2198-D*xxx*-ERS*x* dual-axis inverters.
Encoder Output Module	2198-ABQE	The Allen-Bradley® encoder output module is a DIN-rail mounted EtherNet/IP network-based standalone module capable of outputting encoder pulses to a customer-supplied peripheral device (cameras, for example, used in line-scan vision systems).
Logix 5000™ Controller Platform	Bulletin 1769 Bulletin 5069	Integrated Motion on the EtherNet/IP network in CompactLogix 5370, CompactLogix 5380, and CompactLogix 5480 controllers and Integrated Safety in Compact GuardLogix 5370 and Compact GuardLogix 5380 controllers. Linear, device-level ring (DLR), and star topology is supported.
	1756-EN2T module 1756-EN2TR module 1756-EN3TR module	EtherNet/IP network communication modules for use with ControlLogix 5570, ControlLogix 5580, GuardLogix 5570, and GuardLogix 5580 controllers. Linear, device-level ring (DLR), and star topology is supported.
Studio 5000® Environment	N/A	Studio 5000 Logix Designer® application, version 26.00 or later, provides support for programming, commissioning, and maintaining the CompactLogix, ControlLogix, and GuardLogix controller families.

Table 3 - Kinetix 5700 Drive System Overview (continued)

Drive System Component	Cat. No.	Description
Rotary Servo Motors	Kinetix VP motors	• Compatible 400V-class motors include Kinetix VPL, VPC, VPF, VPH, and VPS servo motors. • Compatible 200V-class motors include Kinetix VPL, VPF, and VPH servo motors.
	Kinetix MP motors	Compatible 200V and 400V-class motors include Kinetix MPL, MPM, MPF, and MPS servo motors.
	Kinetix HPK motors	Compatible motors include 460V and 400V-class Kinetix HPK asynchronous servo motors.
Linear Actuators	Kinetix MPAS, VPAR, MPAR, and MPAI actuators LDAT-Series	Compatible actuators include 400V-class Kinetix MPAS/MPMA linear stages, Kinetix VPAR, MPAR, and MPAI electric cylinders, and LDAT-Series linear thrusters.
Linear Motors	LDC-Series	Compatible motors include LDC-Series iron-core (400V-class) linear motors.
Induction Motors	N/A	Induction motors with open-loop frequency control and closed-loop control are supported.
Cables	2090-CS*x*M1DE-*xxxxxx*	Bulletin 2090 single cable for motor power, feedback, and optional 24V DC brake power with Kinetix VPL, VPC-Q, VPH, VPF, VPS motors. Feedback conductors are wired to the 2198-KITCON-DSL feedback connector kit.
	2090-CS*x*M1DG-*xxxxxx*	Bulletin 2090 single cable for motor power, feedback, and optional 24V DC brake power with Kinetix VPL, VPC-Q, VPH, VPF, VPS motors. 2090-CS*x*M1DG cables have flying-lead feedback conductors for connection to a customer-supplied 2198-KITCON-DSL feedback connector kit.
	2090-CFBM7DF-CEA*xxx*	Bulletin 2090 motor feedback cables for Kinetix MPL, MPM, MPF, and MPS rotary motors and Kinetix MPAS, MPMA, MPAR, MPAI linear actuators with Hiperface encoders.
	2090-CP*x*M7DF-*xx*A*xxx*	Bulletin 2090 motor power/brake cables for Kinetix MPL, MPM, MPF, and MPS rotary motors and Kinetix MPAS, MPMA, MPAR, MPAI linear actuators.
	2090-XXNFMF-S*xx* 2090-CFBM7DF-CDAF*xx*	Bulletin 2090 standard and continuous-flex feedback cables that include additional conductors for use with incremental and EnDat encoders.
	2198T-CHBFLS8-12AA*xx*	Bulletin 2198T power cables for iTRAK power supply to iTRAK motor modules.
	1585J-M8CBJM-*x*	Ethernet cables are available in standard lengths. Shielded cable is required to meet EMC specifications.
AC Line Filters	2198-DB20-F, 2198-DB42-F, 2198-DB80-F, 2198-DB290-F	Bulletin 2198 three-phase AC line filters are required to meet CE and are available for use with DC-bus power supplies. Use 2198-DB*xx*-F filters as field replacements in existing installations that use DC-bus power supplies with inverter ground jumpers installed. Select 2198-DBR*xx*-F filters for all new systems and remove all inverter ground jumpers.
	2198-DBR20-F, 2198-DBR40-F, 2198-DBR90-F, 2198-DBR200-F	Bulletin 2198 three-phase AC line filters are required to meet CE and available for use with DC-bus power supplies and regenerative bus supplies. Select 2198-DBR*xx*-F filters for all new systems and remove all inverter ground jumpers.
Line Reactors	1321-3R*xx-x*	Bulletin 1321 line reactors help keep equipment running longer by absorbing many of the power line disturbances that can shut down your power supply. For 2198-RP*xxx* regenerative bus supplies, line reactors can significantly reduce the amount of circulating currents between the integrated LC filter and other devices on the common AC power source.
AC Contactor	100-C*xxxxx* 100-D*xxxxx* 100-E*xxxxx*	The AC three-phase contactor control string must be wired in series with the contactor-enable relay at the CED connector to make sure that three-phase power is removed under various fault conditions to protect the power supply.
24V DC Power Supply	1606-XL*xxx*	Bulletin 1606 24V DC power supply for control circuitry, digital inputs, safety, and motor brake.
External Passive Shunt Resistors	2198-R014, 2198-R031, 2198-R127, 2198-R004	Bulletin 2198 external passive-shunt resistors for use when the DC-bus power supply internal shunt capability is exceeded. Not for use with regenerative bus supplies.
External Active Shunts	N/A	External active shunts from Rockwell Automation Encompass™ partner, Powerohm Resistors, Inc., are available for connecting to Bulletin 2198 DC-bus power supplies and regenerative bus supplies. See External Active-shunt Connections on page 178 for catalog numbers.

DC-bus Power Supply Input Power Configurations

A single 2198-P*xxx* DC-bus (converter) power supply can supply the Kinetix 5700 drive system with 276...747V shared DC-bus power. For additional output power (kW) you can install two or three 2198-P208 DC-bus power supplies. You can also extend the DC-bus to additional inverter clusters via accessory modules.

Typical DC-bus Power Supply Configuration Example

In this multi-axis example, AC input power is fed to the DC-bus (converter) power supply. One single-axis (inverter) module and two dual-axis (inverter) modules support five axes of motion. The DC-bus power supply is mounted on the far left and the inverters are positioned on the right, but the reverse mounting order (right to left) is also possible.

Digital inputs are wired to sensors and the control circuitry at the IOD connectors. The contactor-enable relay protects the DC-bus power supply in the event of shutdown fault conditions.

Figure 1 - Typical DC-bus Power Supply Installation

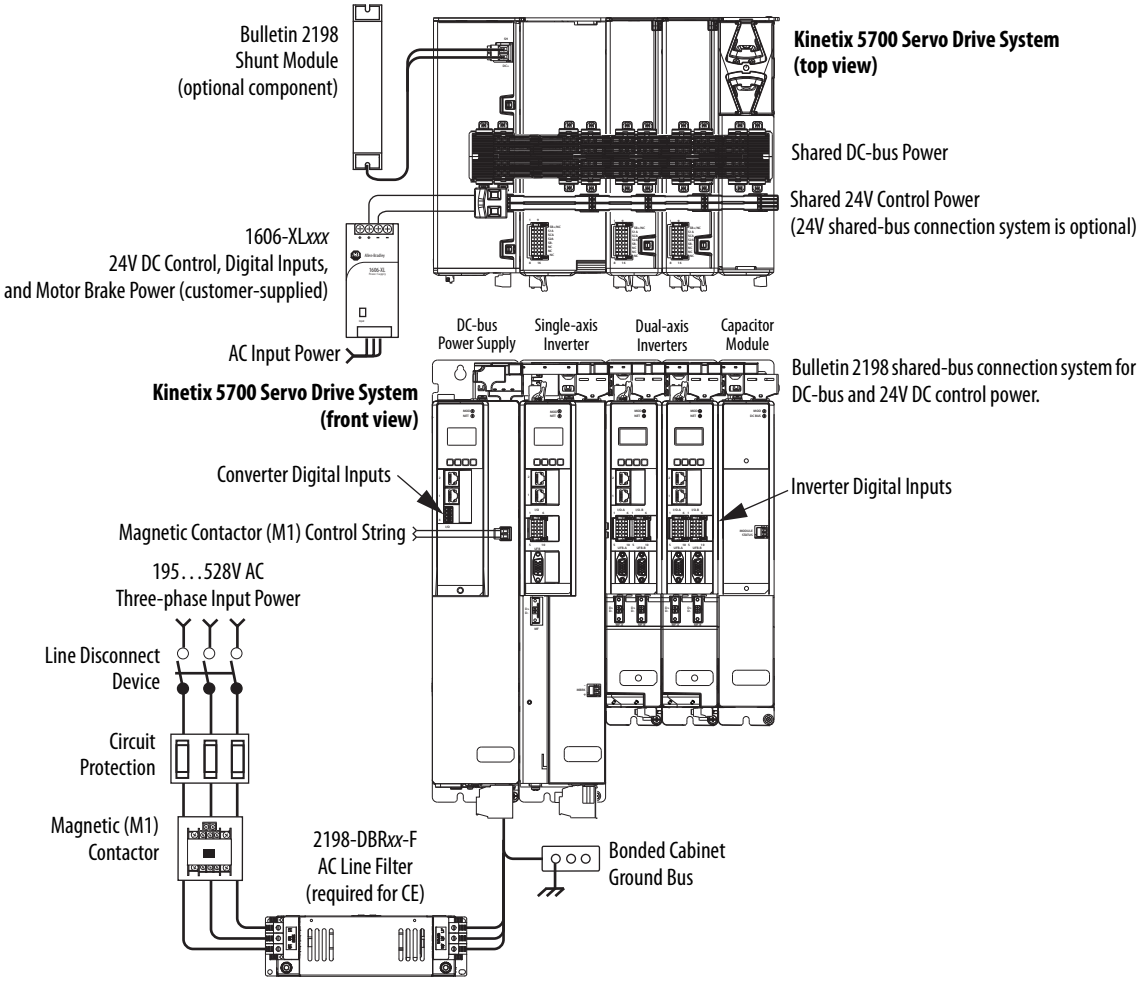

Multiple DC-Bus Power Supply Configuration Example

In this example, three DC-bus (converter) power supplies all receive AC input power and feed the inverter modules for increased output power.

Contactor enable relays from each of the DC-bus power supplies are wired in series to protect the DC-bus power supply in the event of shutdown fault conditions.

Figure 2 - Multiple DC-bus Power Supply Installation

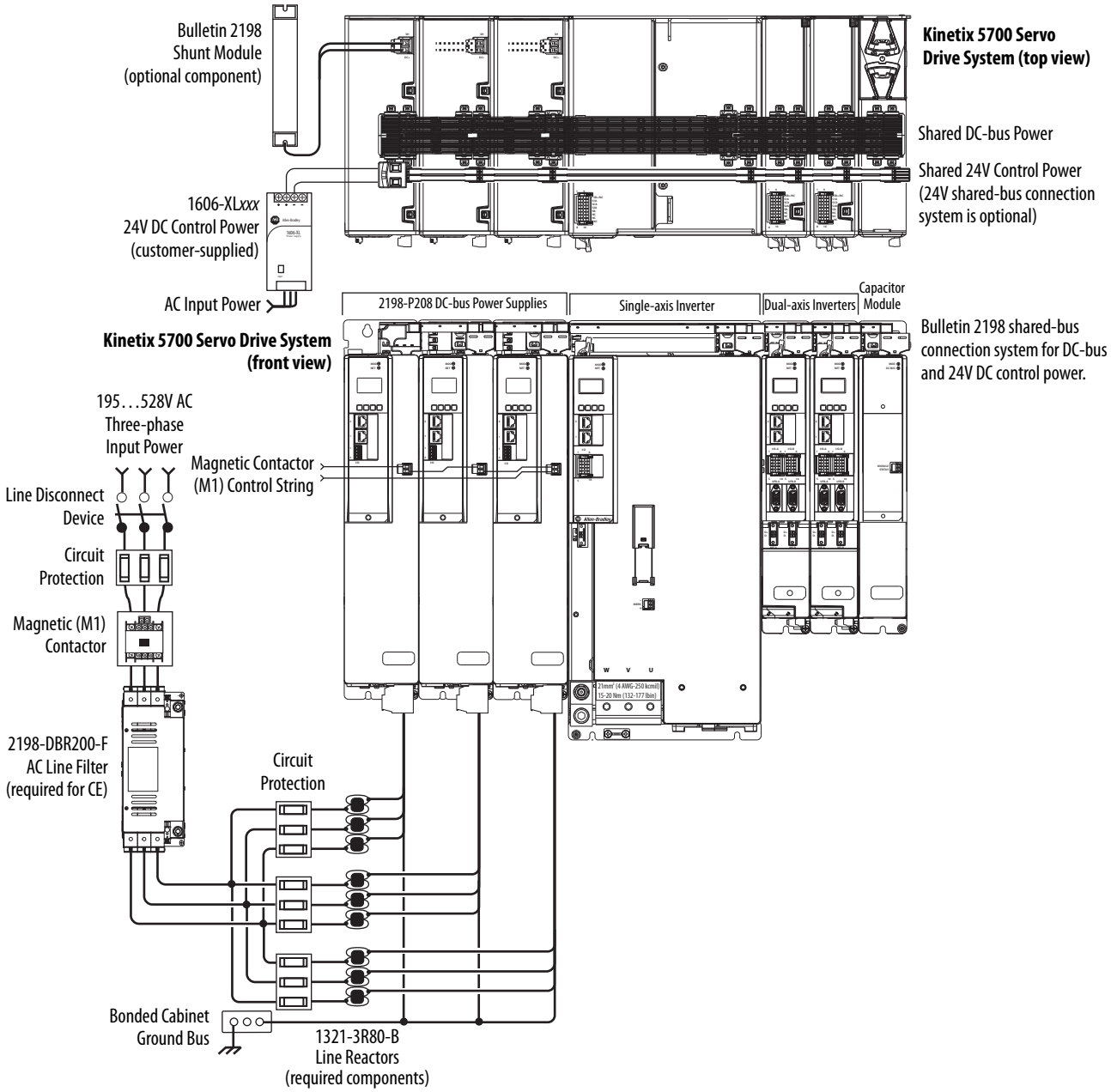

IMPORTANT When two or three DC-bus power supplies are wired together in the same drive cluster, they must all be catalog number 2198-P208.

Extended DC-bus Configuration Example

In this example, two drive clusters in the same cabinet are connected by the same 276...747V DC bus voltage. Kinetix 5700 accessory modules provide connection points for the DC-bus at the end of cluster 1 and the beginning of cluster 2. The Kinetix 5700 servo drive system is capable of up to 208 A DC-bus current. Two accessory modules are needed when the DC-bus system current exceeds 104 A. See Accessory Module Selection on page 57 for more information on the when accessory modules are required.

Figure 3 - Extended DC-bus Installation

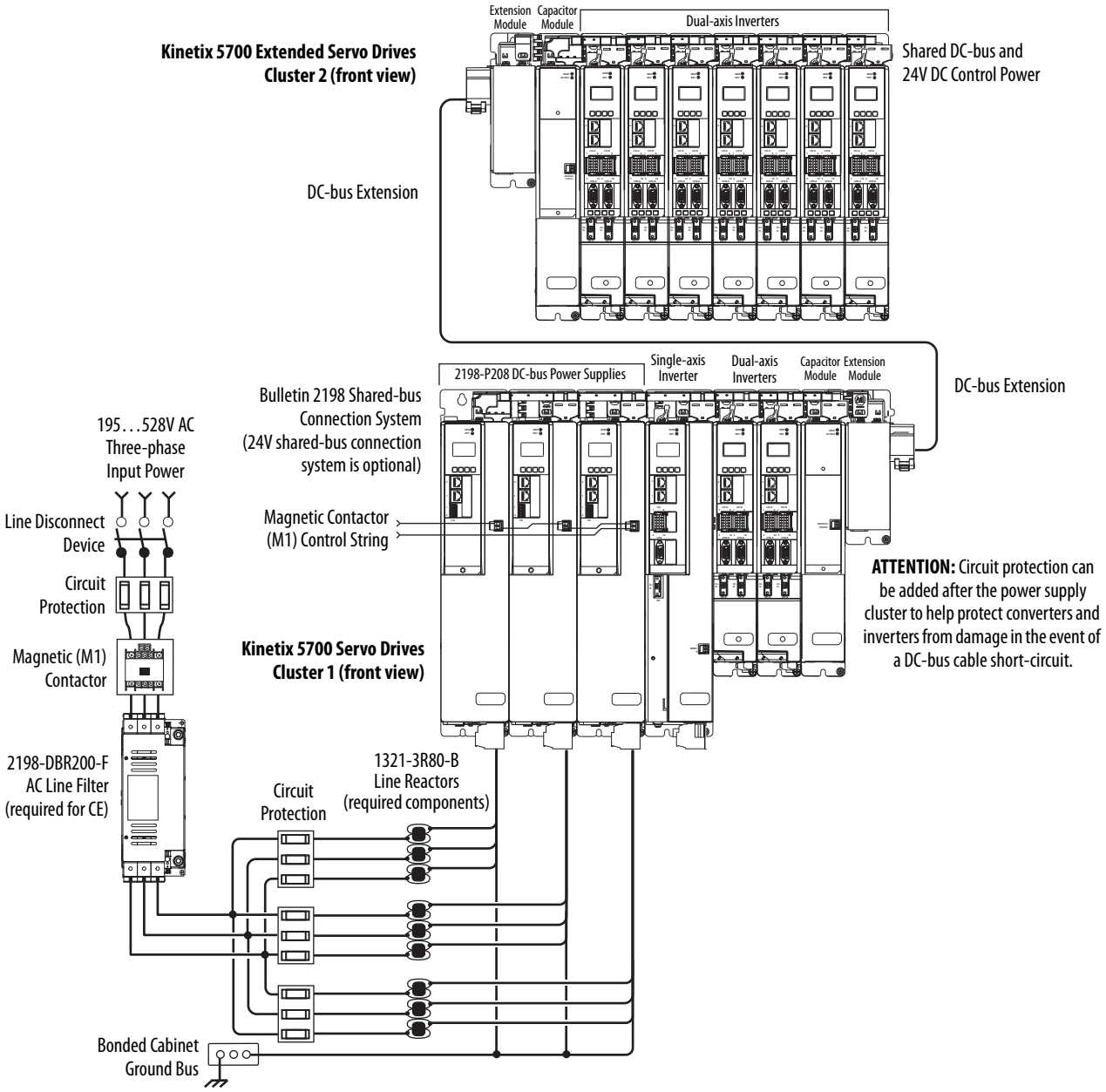

IMPORTANT When two or three DC-bus power supplies are wired together in the same drive cluster, they must all be catalog number 2198-P208.

iTRAK Power Supply Configuration Example

In this example, AC input power is fed to the DC-bus (converter) power supply. Two iTRAK power supplies support up to 36 iTRAK motor modules, depending on cable lengths and iTRAK motor-module power consumption.

Digital inputs are wired to sensors and the control circuitry at the IOD connectors. The contactor-enable relay protects the DC-bus power supply in the event of shutdown fault conditions.

Figure 4 - Typical iTRAK Power Supply Installation

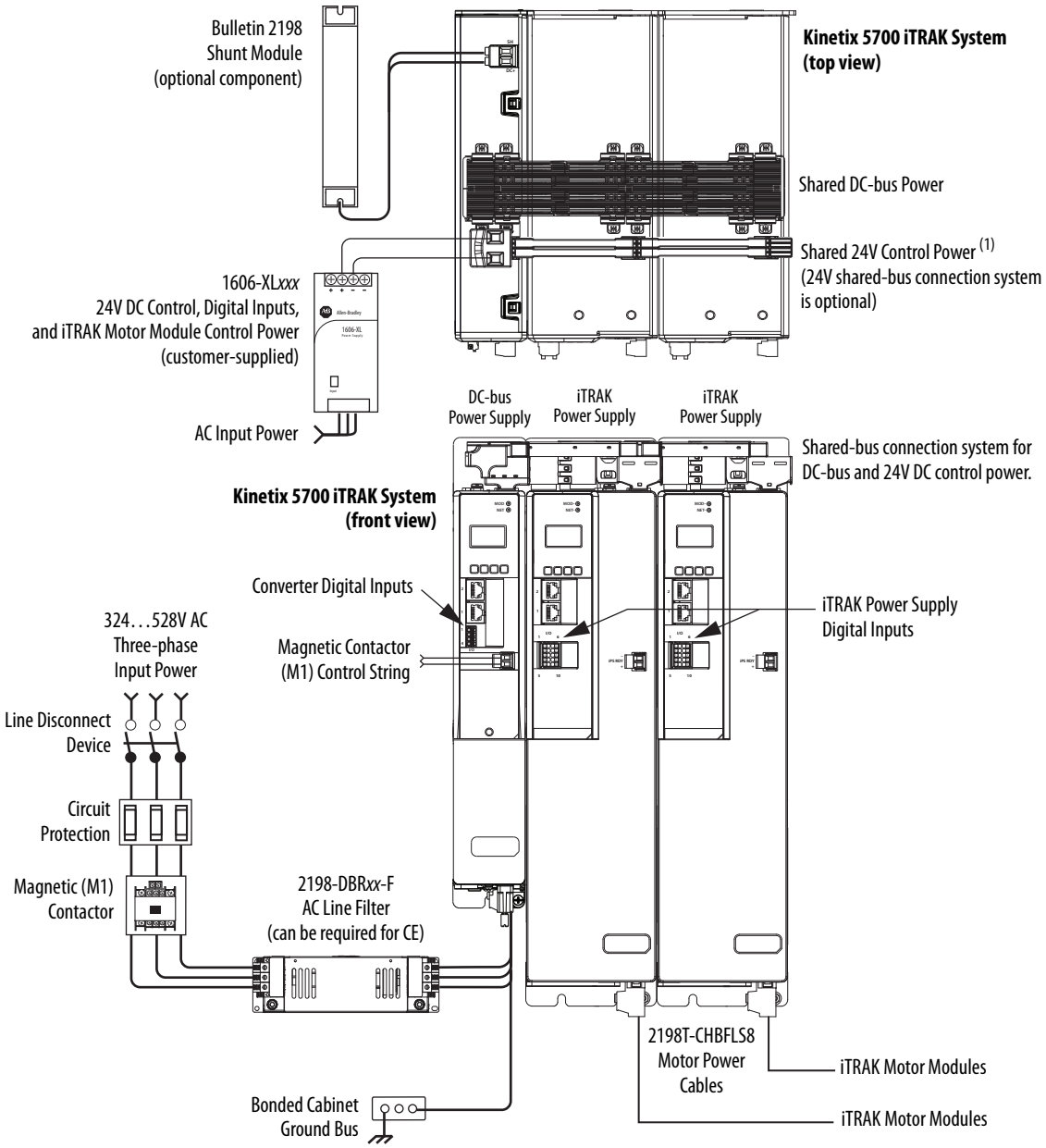

(1) If total control power current exceeds 16 A, a second input connector (catalog number 2198T-W25K-P-IN) can be added to the leftmost iTRAK power supply.

Regenerative Bus Supply Input Power Configurations

The 2198-RP*xxx* regenerative bus supply (24...140 kW) provides full-line motoring and regenerative power to and from the Kinetix 5700 drive system. In addition, you can extend the DC-bus voltage to additional inverter clusters via accessory modules.

Typical Regenerative Bus Configuration Examples

In this example, the inverter modules are mounted to the right of the regenerative bus supply. One single-axis (inverter) module and three dual-axis (inverter) modules support seven axes of motion. Other features include:

- Digital inputs are wired to sensors and the control circuitry at the IOD connectors.
- The contactor enable relay protects the regenerative bus supply in the event of shutdown fault conditions.
- The DC-bus conditioner module is required when the combined motor cable length exceeds 400 m (1312 ft). See Accessory Module Selection on page 57 for more information on accessory module requirements.

Figure 5 - Typical Shared DC-bus Installation (mounted left to right)

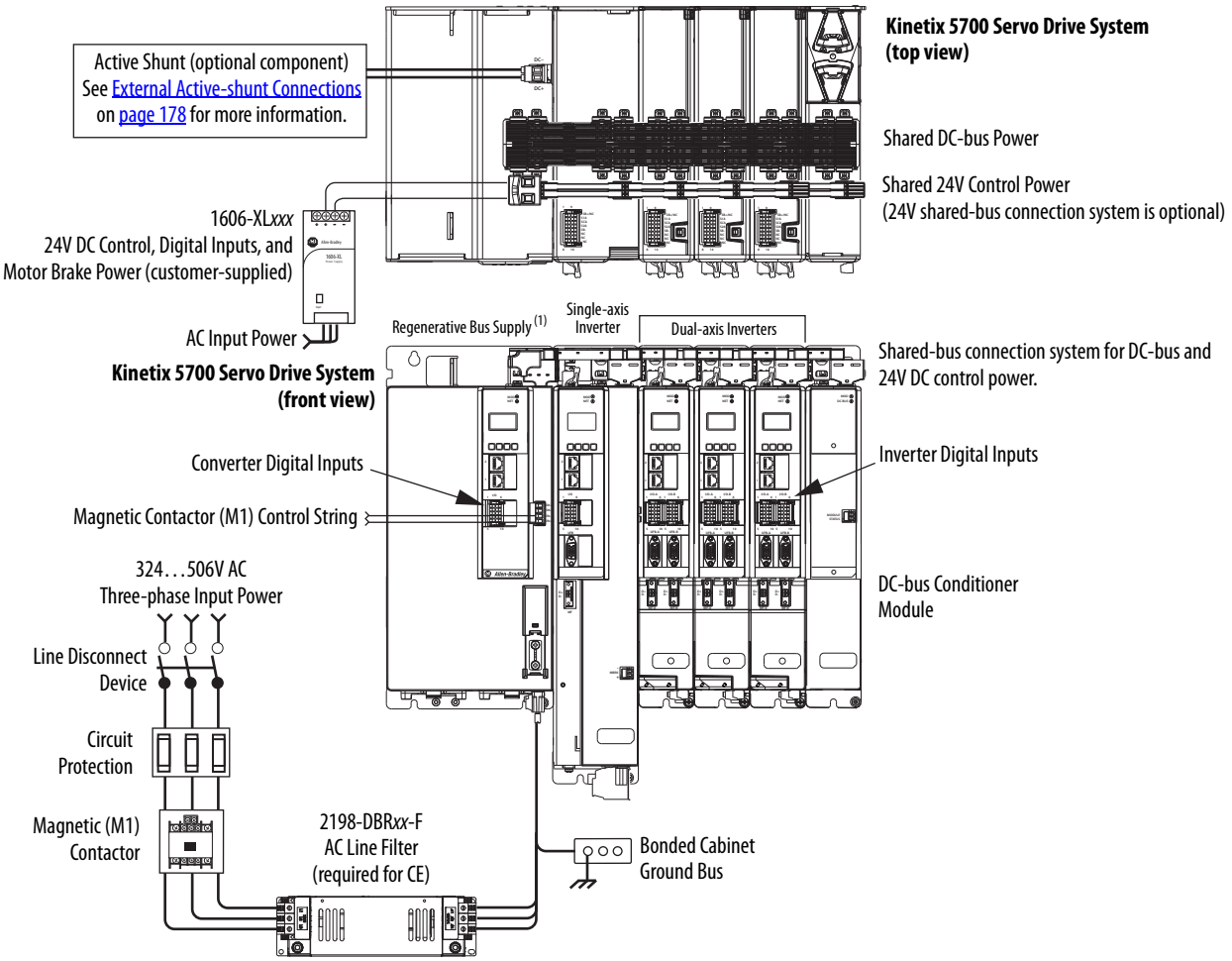

(1) The regenerative bus supply can be left or right of the inverters. Further, we recommend that the highest inverter power ratings are positioned closest to the regenerative bus supply and in decreasing order leading away from the regenerative bus supply.

In this example, the 2198-RP312 regenerative bus supply is mounted on the far right and followed by the 2198-S312-ERS*x* single-axis inverter, and two 2198-D020-ERS*x* dual-axis inverters.

- The 2198-BARCON-440DC200 DC-bus link extends the DC-bus from the regenerative bus supply to the single-axis inverter.
- The 2198-BARCON-220DC200 DC-bus link extends the DC-bus from the single-axis inverter to the dual-axis inverter.
- The regenerative bus supply has 24V DC wired to the connector plug
- The 2198-*xxxx*-P-T bus-bar connector extends 24V control power from the input wire connector to the dual-axis and single-axis inverters.
- The DC-bus conditioner module is required when the combined motor cable length exceeds 400 m (1312 ft). See Accessory Module Selection on page 57 for more information on accessory module requirements.

Figure 6 - Typical Shared DC-bus Installation (mounted right to left)

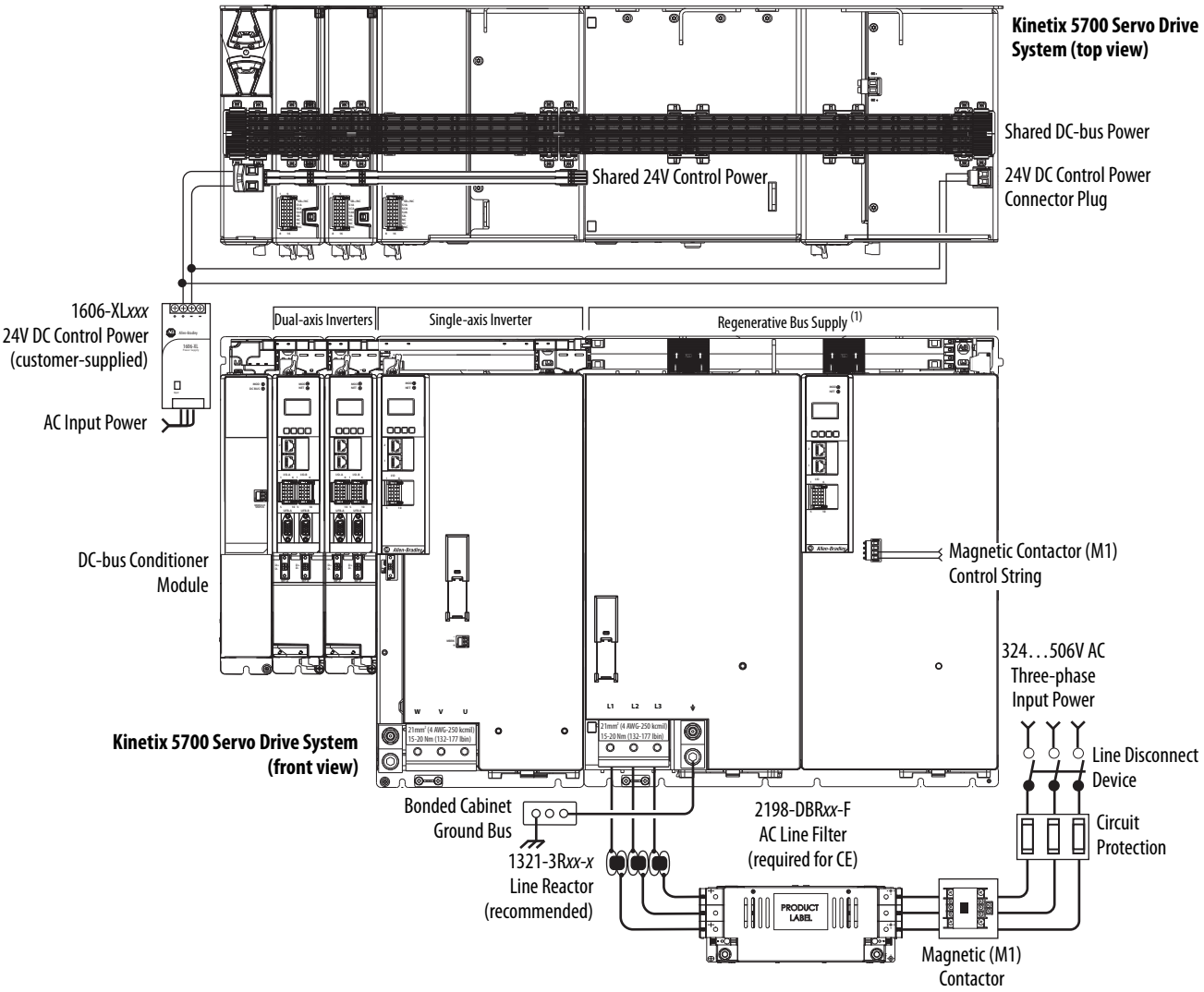

(1) The regenerative bus supply can be left or right of the inverters. Further, we recommend that the highest inverter power ratings are positioned closest to the regenerative bus supply and in decreasing order leading away from the regenerative bus supply.

In this example, three-phase input power feeds two 2198-RP*xxx* regenerative power supplies and one 2198-P*xxx* DC-bus power supply.

IMPORTANT We recommend that Bulletin 1321 line reactors be used in any system with multiple regenerative bus supplies sharing the same AC input-power source.

Bulletin 1321 line reactors are used in the regenerative power supply input power circuits to help do the following:

- Reduce circulating currents between different systems
- Prevent all power supplies on the same input power source from nuisance thermal overload faults

Figure 7 - Input Power to Multiple Kinetix 5700 Drive Systems

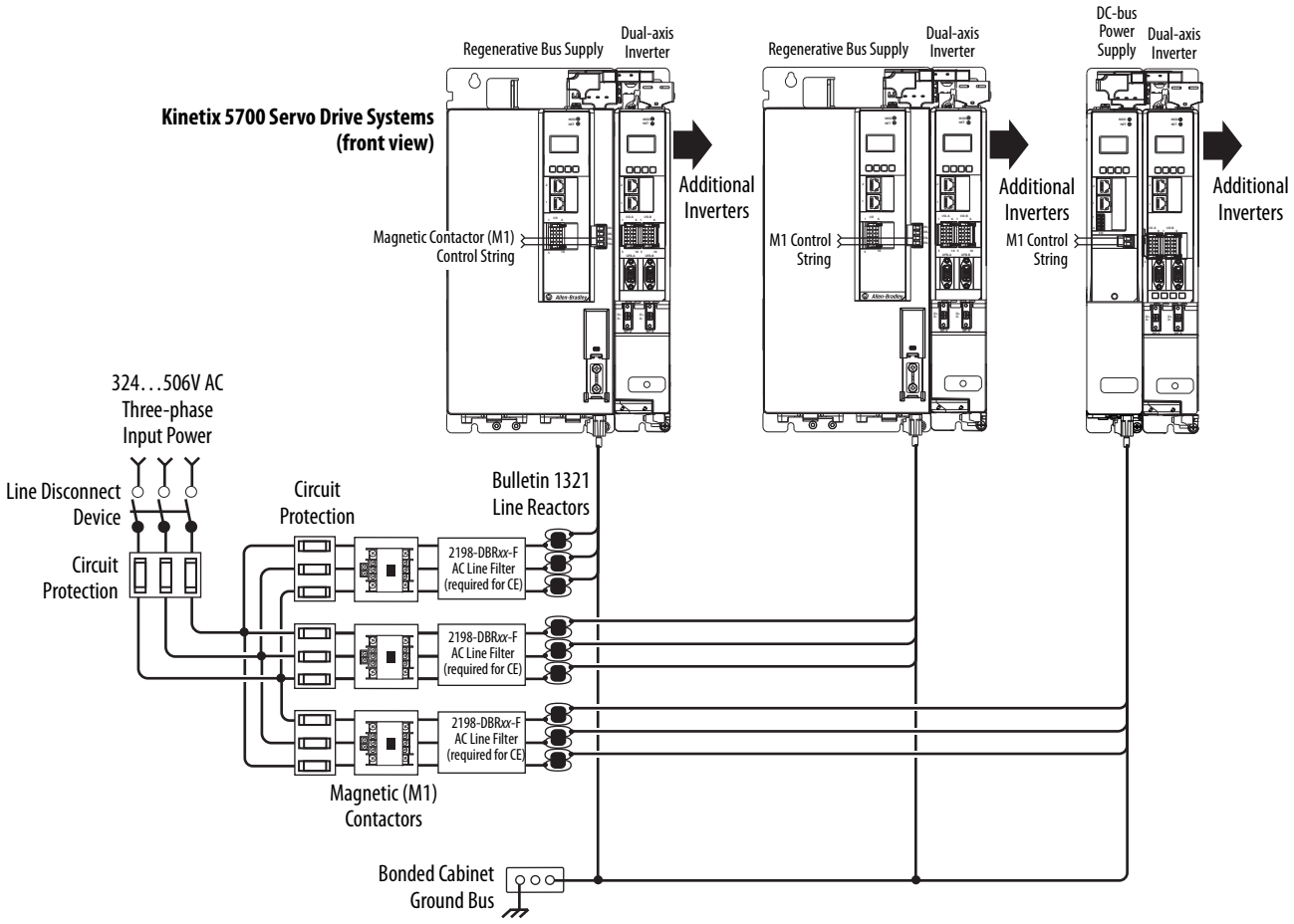

IMPORTANT The regenerative bus supply is not compatible with the iTRAK power supply.

Extended Regenerative Bus Configuration Example

In this example, two drive clusters in the same cabinet are connected by the same 458...747V DC bus voltage.

- Kinetix 5700 accessory modules provide connection points for the DC bus at the end of cluster 1 and the beginning of cluster 2.
- The Kinetix 5700 servo drive system is capable of up to 208 A DC-bus current. Two parallel accessory modules are needed when the DC-bus system current exceeds 104 A.
- The DC-bus conditioner module is required when the combined motor cable length exceeds 400 m (1312 ft). See Accessory Module Selection on page 57 for more information on accessory module requirements.

Figure 8 - Extended DC-bus Installation

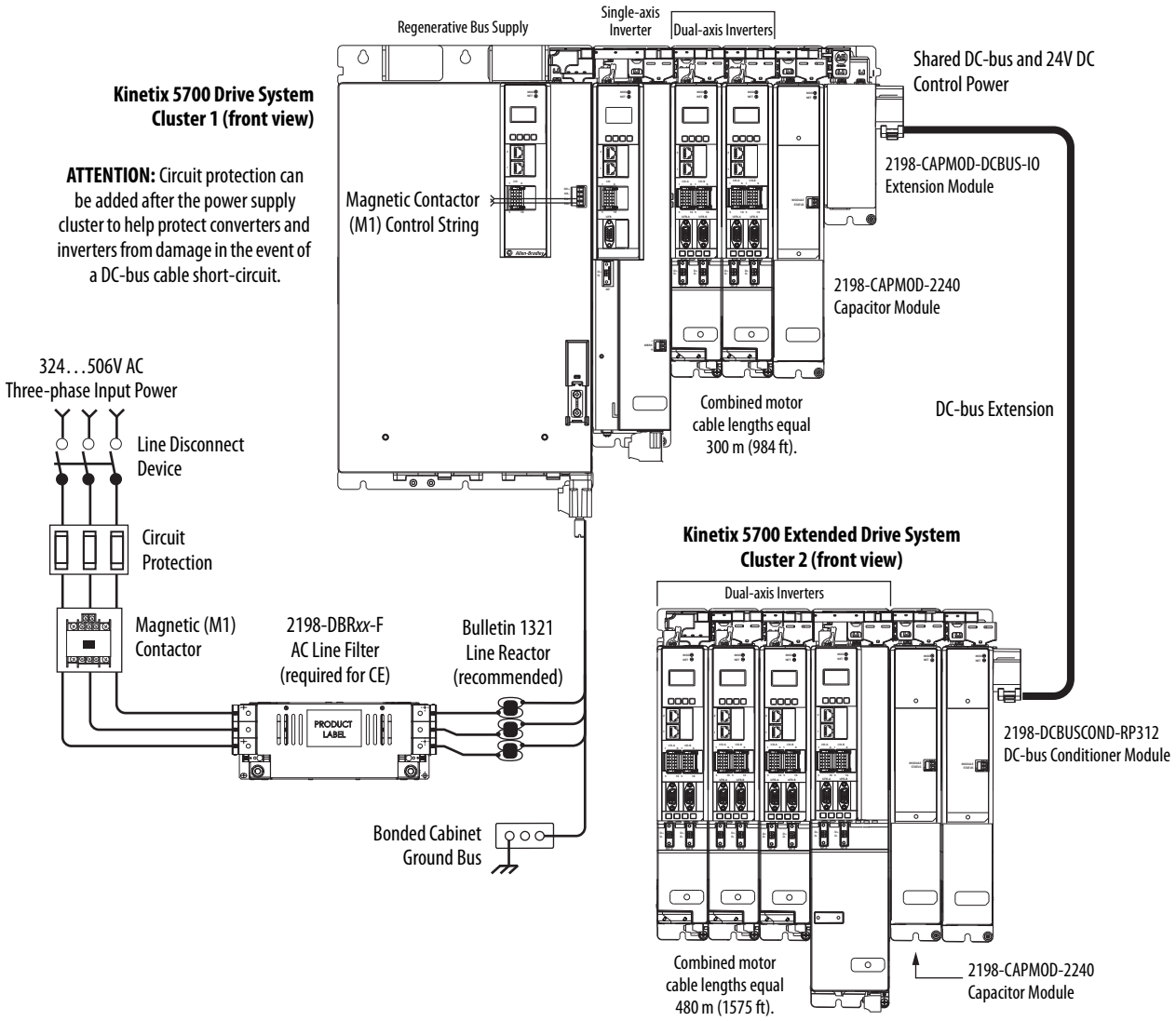

8720MC-RPS Power Supply Input Power Configuration

In this example, three-phase AC input power is fed to the Bulletin 8720MC regenerative power supply. The 8720MC-RPS DC-bus voltage supplies the Kinetix 5700 DC-bus via the capacitor module.

- The 8720MC-RPS065 provides 65 A of DC-bus current. The 2198-CAPMOD-2240 capacitor module and 2198-DCBUSCOND-RP312 DC-bus conditioner are required to reduce voltage stress on the system components.
- If the 8720MC-RPS190 is used, the capacitor module and DC-bus conditioner module provide up to 208 A of DC input current. DC-bus full-regeneration is possible with this configuration.
- The DC-bus conditioner module is required when the combined motor cable length exceeds 400 m (1312 ft). See Accessory Module Selection on page 57 for more information on accessory module requirements.

IMPORTANT The 8720MC-RPS power supply is not compatible with the iTRAK power supply.

Figure 9 - 8720MC-RPS Power Supply Installations

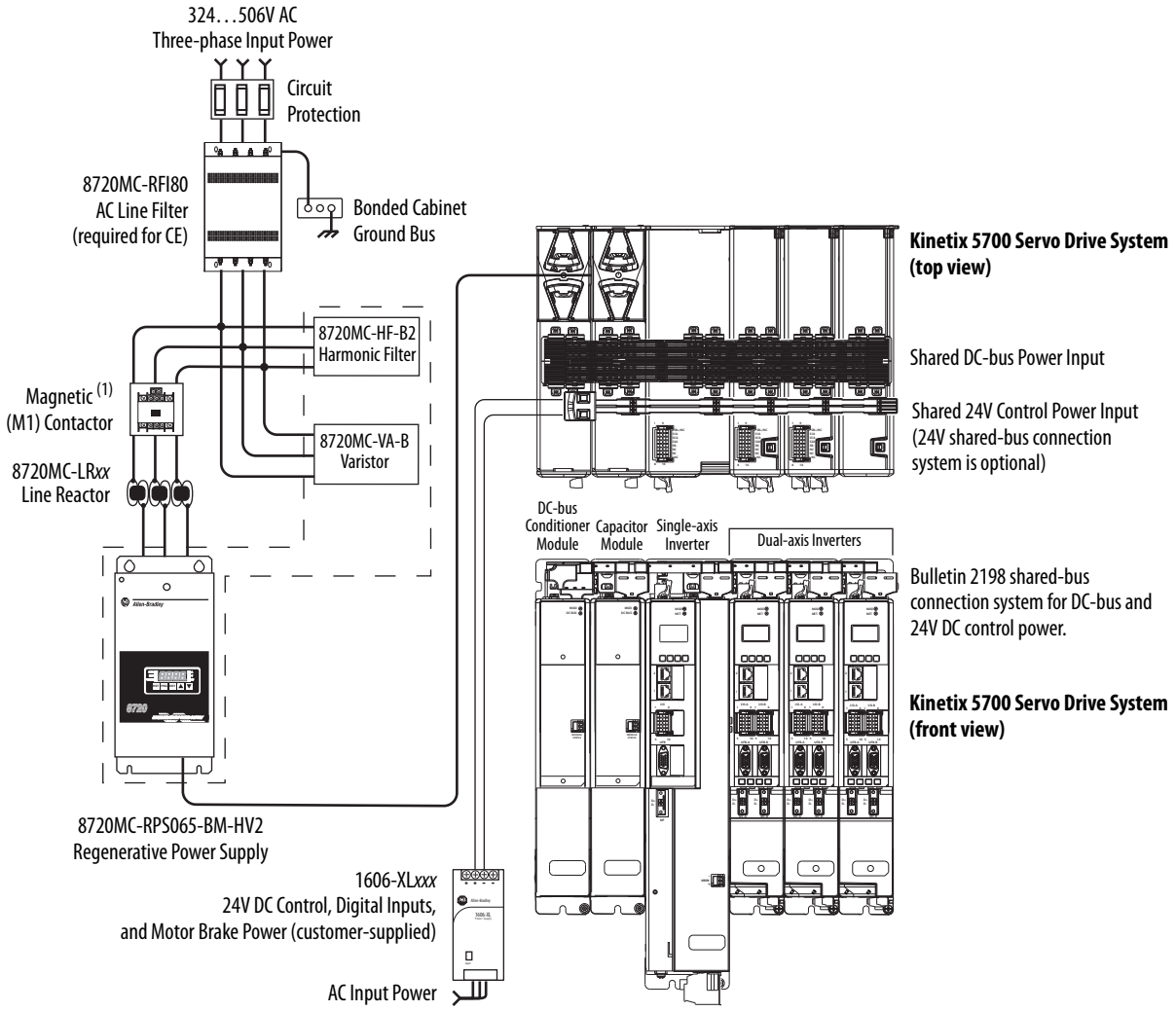

(1) This M1 contactor is controlled by the 8720MC regenerative power supply.

Motor and Auxiliary Feedback Configurations

Feedback connections are made at the 2-pin motor feedback (MF) connector and the 15-pin universal feedback (UFB) connector. These examples illustrate how you can use the Bulletin 2198 connector kits for making these connections. To see motor power and brake connections, refer to Chapter 5 on page 121.

Figure 10 - Feedback Configuration Example

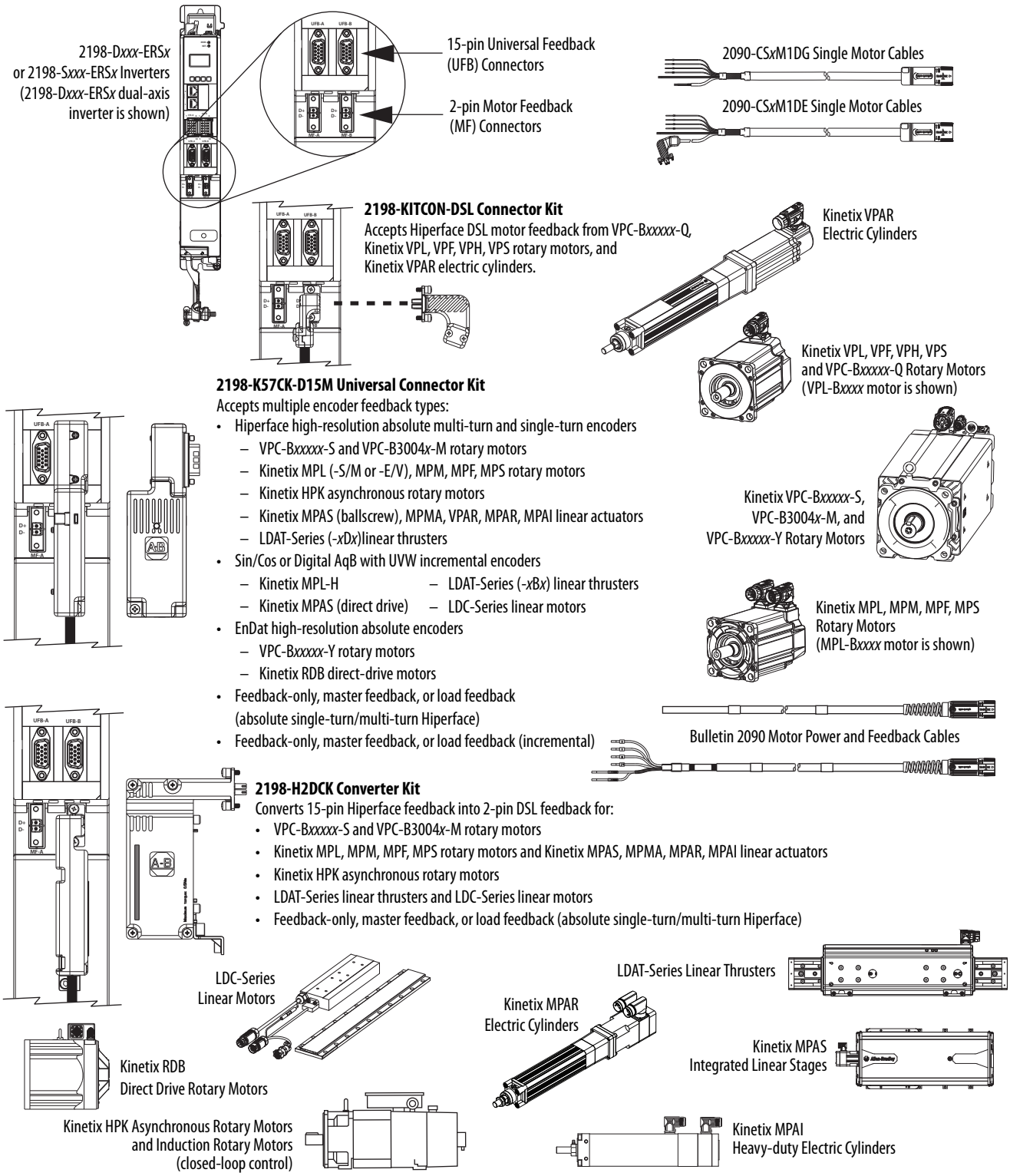

Typical Communication Configurations

The Kinetix 5700 drives support any Ethernet topology including linear, ring, and star by using ControlLogix, GuardLogix, or CompactLogix controllers.

These examples feature the ControlLogix 5570 programmable automation controllers with support for integrated motion and integrated safety over the EtherNet/IP network. Other Allen-Bradley controllers are also compatible with the Kinetix 5700 servo drives.

Refer to ControlLogix Communication Module Specifications Technical Data, publication 1756-TD003, for more information on ControlLogix 1756-EN2T, 1756-EN2TR, and 1756-EN3TR communication modules.

TIP These example configurations use the 2198-P*xxx* DC-bus power supply. However, 2198-RP*xxx* regenerative bus supply can be used instead.

Linear Topology

In this example, all devices are connected by using linear topology. The Kinetix 5700 drive modules include dual-port connectivity, however, if any device becomes disconnected, all devices downstream of that device lose communication. Devices without dual ports must include the 1783-ETAP module or be connected at the end of the line.

Figure 11 - Kinetix 5700 Linear Communication Installation

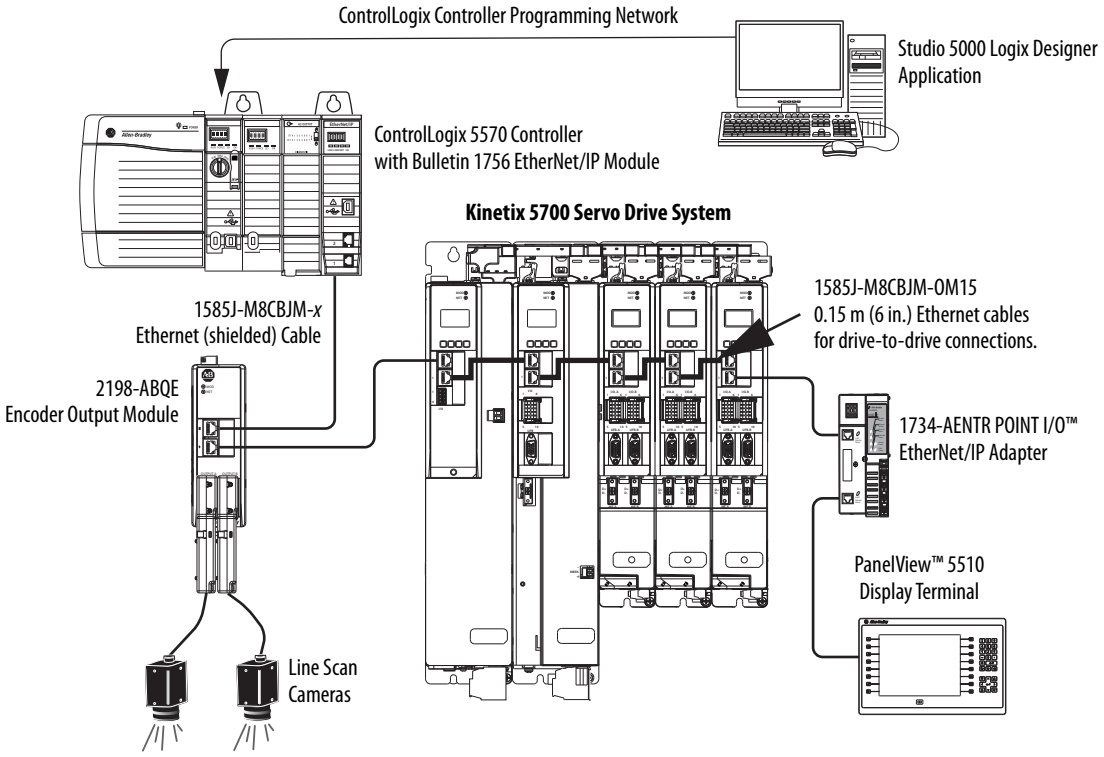

Ring Topology

In this example, the devices are connected by using ring topology. If only one device in the ring is disconnected, the rest of the devices continue to communicate. For ring topology to work correctly, a device level ring (DLR) supervisor is required (for example, the Bulletin 1783 ETAP device). DLR is an ODVA standard. For more information, refer to the EtherNet/IP Embedded Switch Technology Application Guide, publication ENET-AP005.

Devices without dual ports, for example the display terminal, require a 1783-ETAP module to complete the network ring.

Figure 12 - Kinetix 5700 Ring Communication Installation

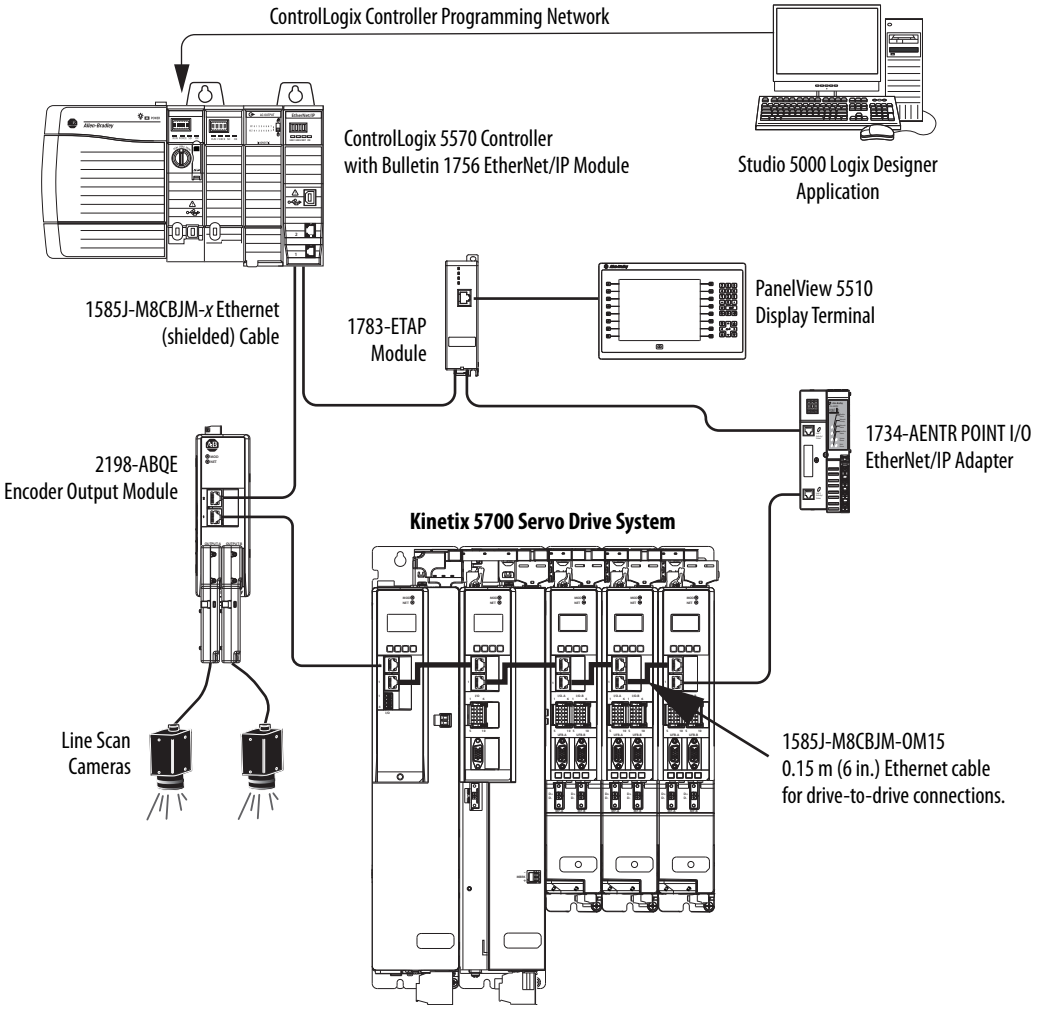

Star Topology

In this example, the devices are connected by using star topology. Each device is connected directly to the switch.

Kinetix 5700 drive modules have dual ports, so linear topology is maintained from one module to another, but the Kinetix 5700 system and other devices operate independently. The loss of one device does not impact the operation of other devices.

Figure 13 - Kinetix 5700 Star Communication Installation

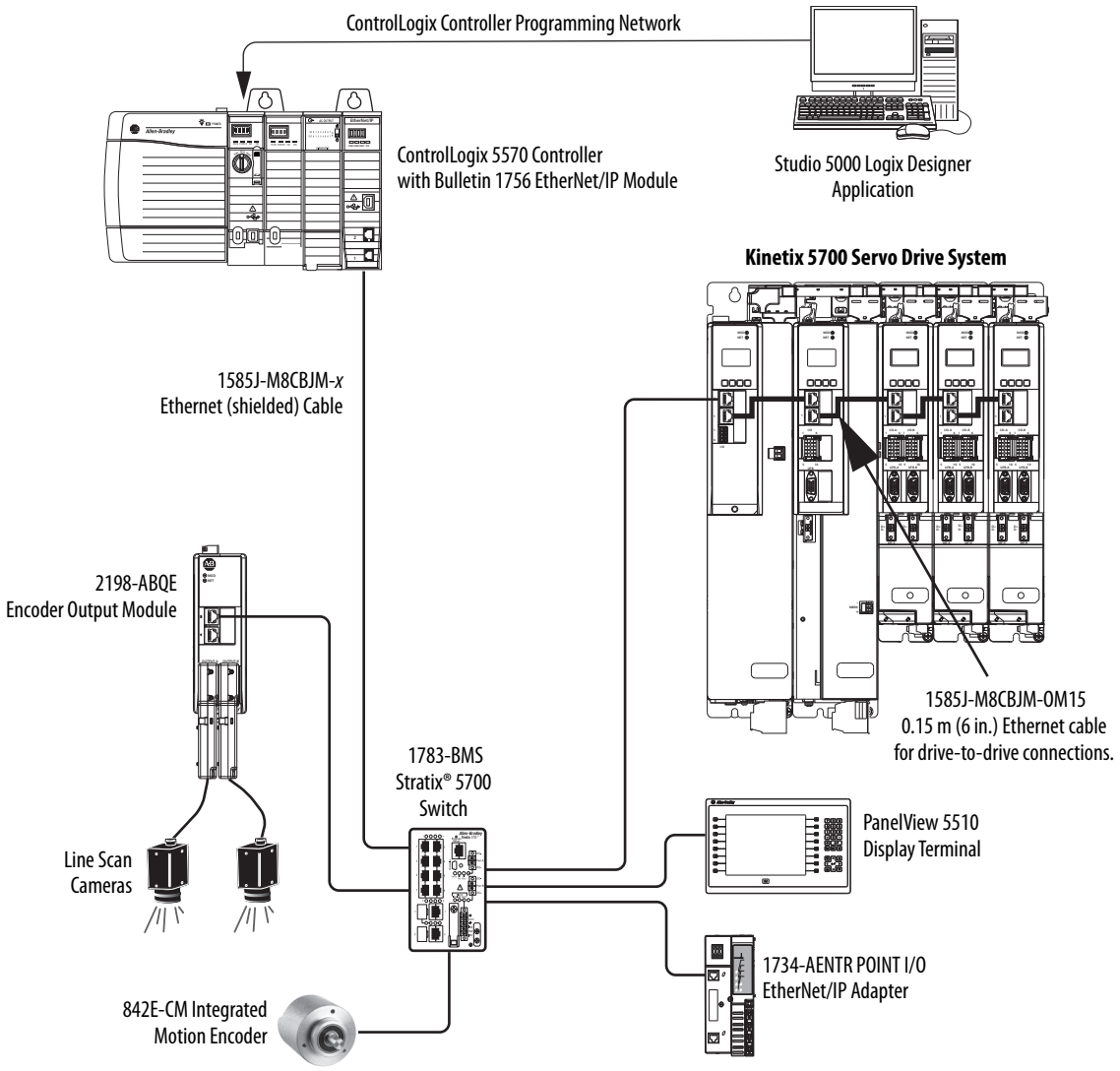

You can use the 842E-CM integrated motion encoder for applications requiring an external encoder for gearing or camming to the Kinetix 5700 drive. By providing auxiliary feedback directly through the EtherNet/IP network, the 842E-CM encoder mitigates the need for point-to-point wiring while letting you use the encoder in a variety of network topologies. For more information, see the 842E-CM Integrated Motion on EtherNet/IP Product Profile, publication 842ECM-PP001.

Functional Safety Configurations

Kinetix 5700 servo drives are capable of safe torque-off (STO) and safe stop 1 (SS1) drive-based safety functions via hardwired connections or integrated over the EtherNet/IP network. In addition, safely limited speed (SLS) and other controller-based safety instructions are also possible. These examples illustrate the functional safety configuration options.

TIP These example configurations use the 2198-P*xxx* DC-bus power supply. However, 2198-RP*xxx* regenerative bus supply can be used instead.

Hardwired Configuration

Kinetix 5700 servo drives use the safe torque-off (STO) connector for wiring external safety-devices and cascading hardwired safety-connections from one drive to another.

Figure 14 - Safe Torque-off (hardwired) Configuration

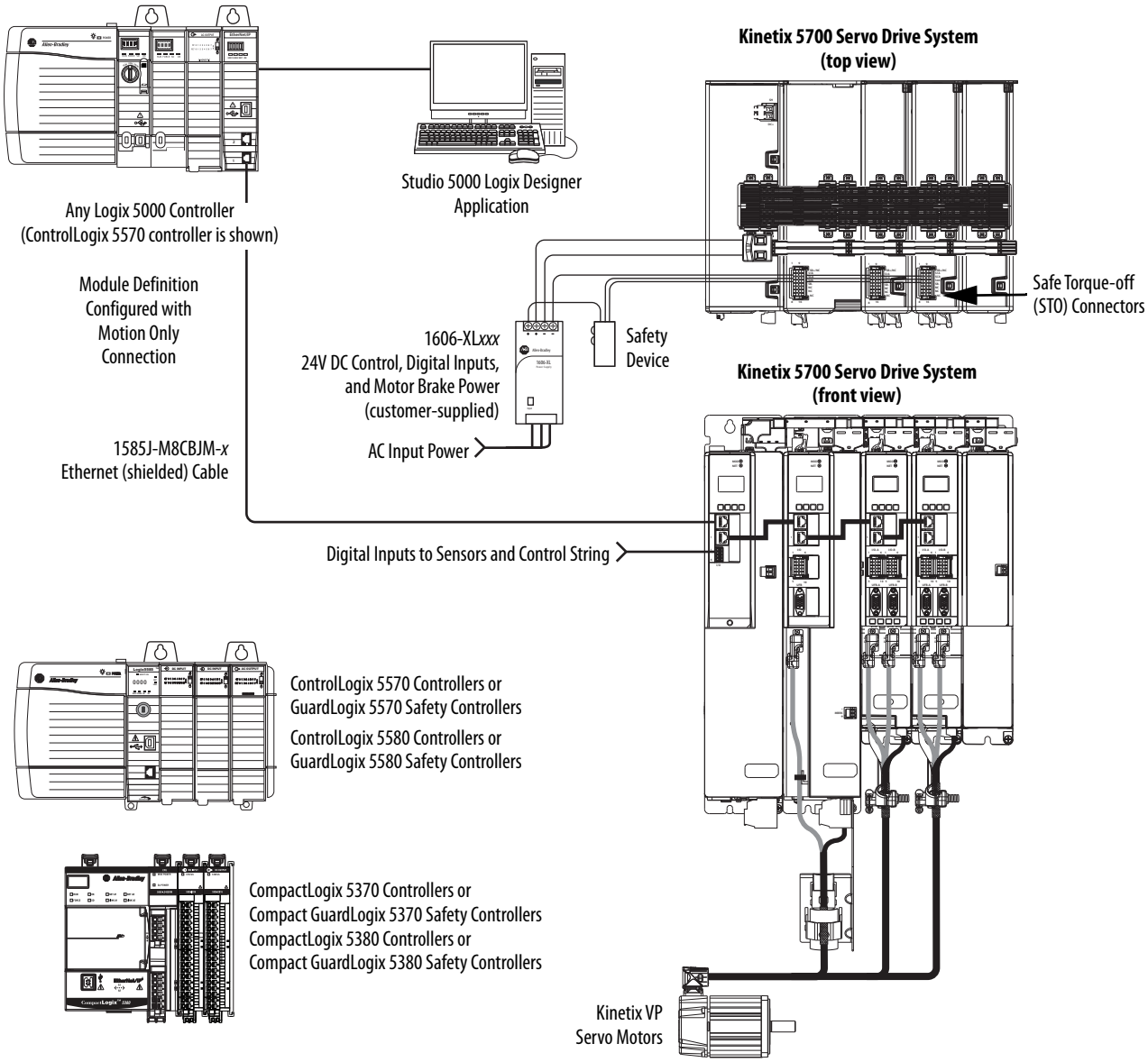

Integrated Safety Configurations

The GuardLogix or Compact GuardLogix safety controller issues the safe torque-off (STO) or safe stop (SS1) command over the EtherNet/IP network and the Kinetix 5700 servo drive executes the command.

In this example, a single GuardLogix safety controller makes the Motion and Safety connections.

IMPORTANT If only one controller is used in an application with Motion and Safety connections, it must be a GuardLogix or Compact GuardLogix safety controller. For more information, see the Integrated Functional Safety Support table on page 16.

Figure 15 - Motion and Safety Configuration (single controller)

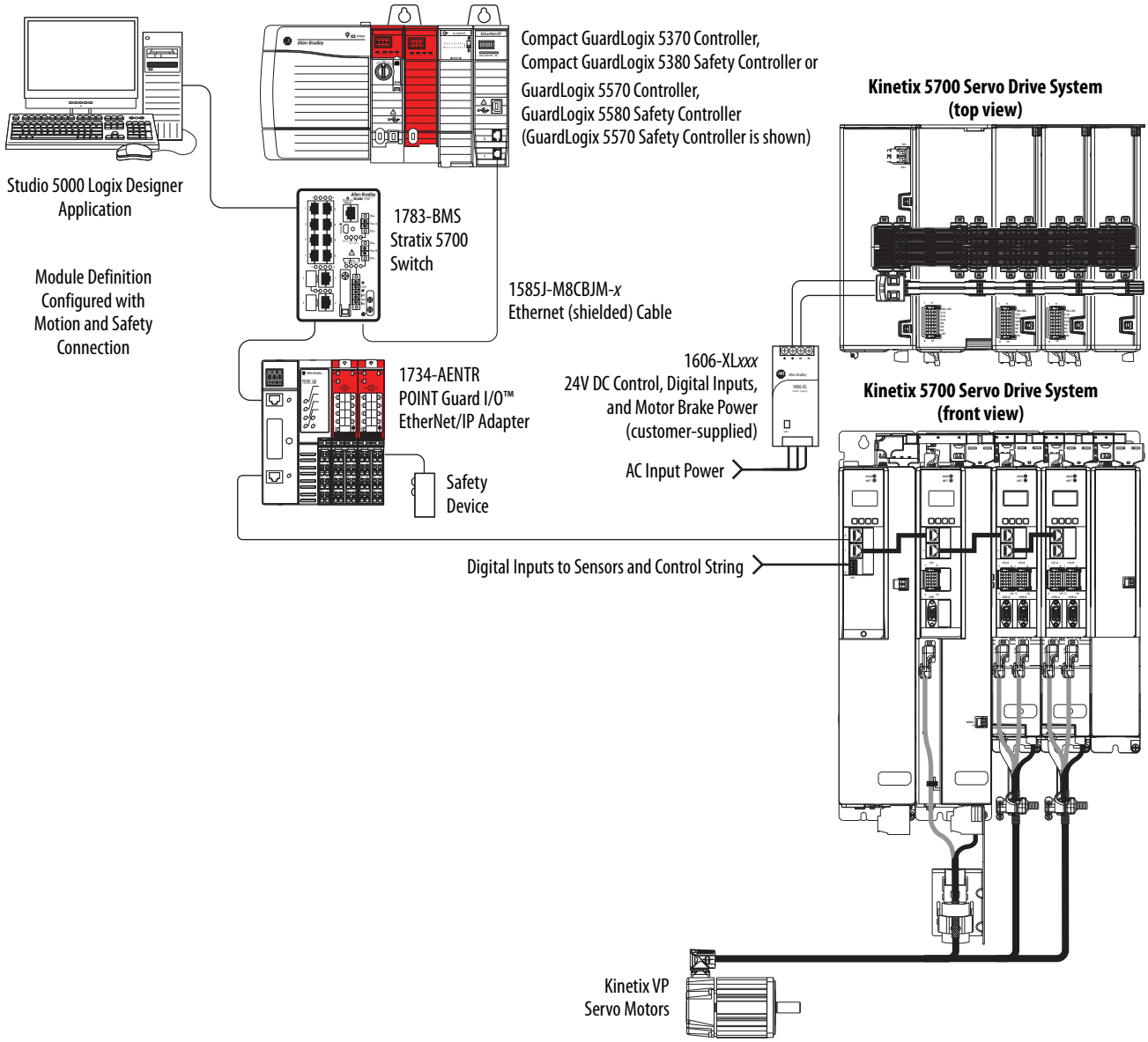

In this example, a non-safety controller makes the Motion-only connection and a separate GuardLogix safety controller makes the Safety-only connection.

IMPORTANT If two controllers are used in an application with Motion Only and Safety Only connections, the Safety Only connection must be a GuardLogix or Compact GuardLogix safety controller and the Motion Only connection must be any Logix 5000 controller. For more information, see the Integrated Functional Safety Support table on page 16.

Figure 16 - Motion and Safety Configuration (multi-controller)

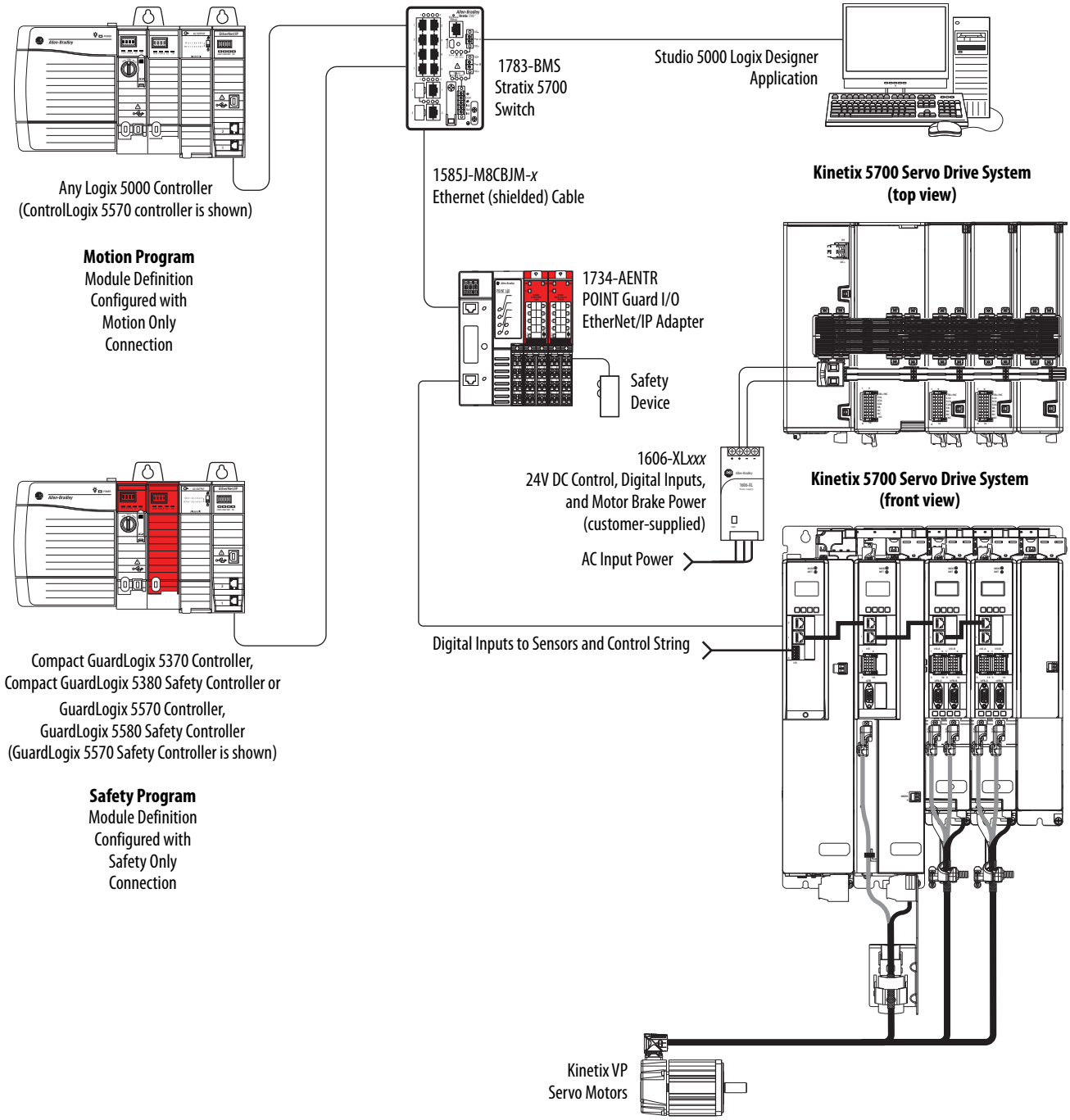

Safe Stop and Safe Monitor Configurations

Kinetix 5700 servo drives are capable of safe stop and safe monitor functions via drive-based and controller-based integrated safety over the EtherNet/IP network.

IMPORTANT For applications with safe stop and safe monitor safety functions, the GuardLogix 5580 or Compact GuardLogix 5380 controllers must be used. For more information, see the Integrated Functional Safety Support table on page 16.

In this example, the SS1 stopping function is used in a motion and safety controller-based configuration with dual-feedback monitoring.

Figure 17 - Safe Motion-monitoring Configuration

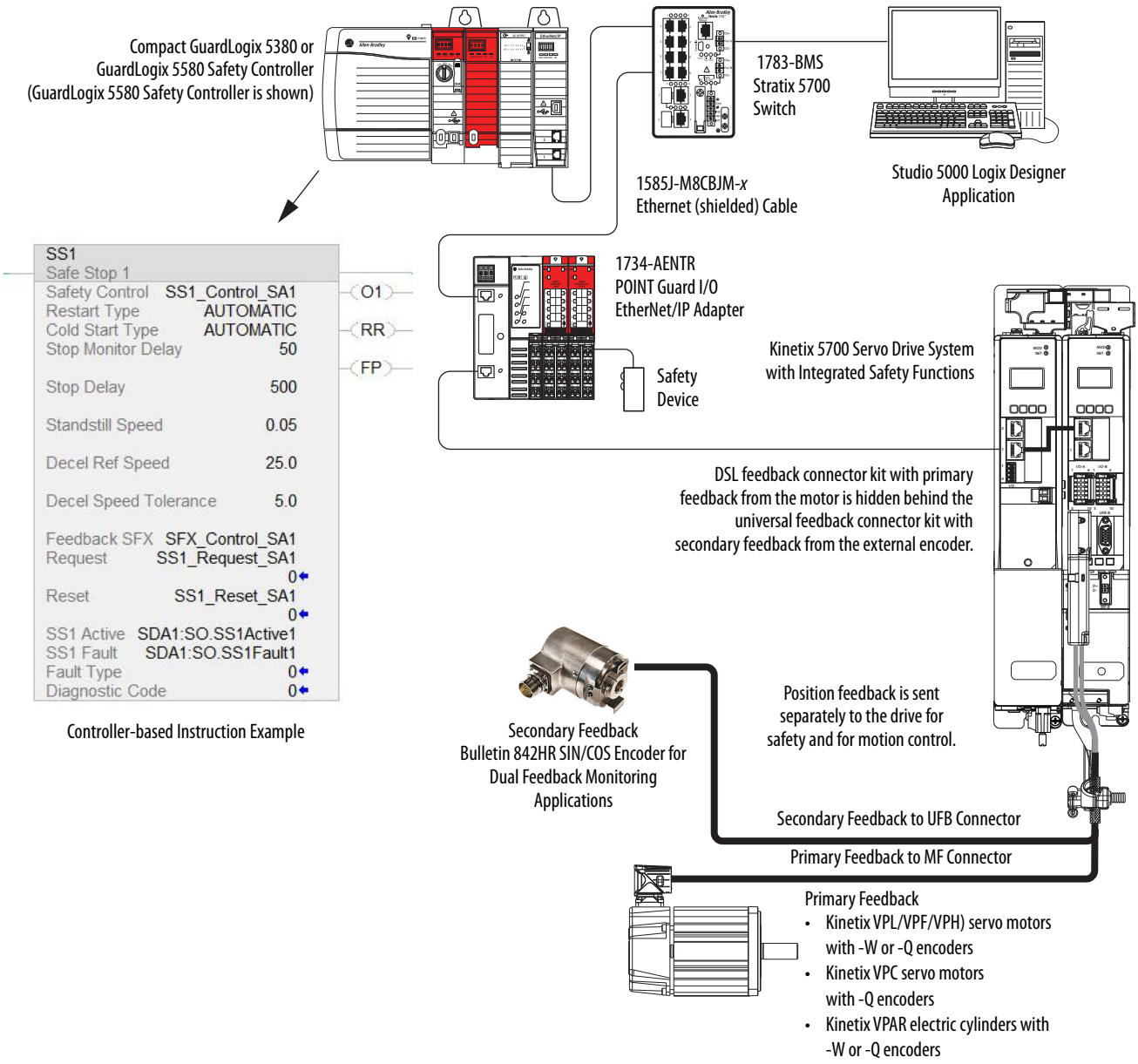

Catalog Number Explanation

Kinetix 5700 drive module catalog numbers and performance descriptions.

Table 4 - Kinetix 5700 Drive Module Catalog Numbers

Kinetix 5700 Drive Modules	Cat. No.	Continuous Output Current to Bus A_{DC} rms	Module Width mm	Continuous Output Power		Output Current	
				240V Input kW	480V Input kW	Continuous A 0-pk	Peak A 0-pk
DC-bus Power Supply (195…528V AC rms, three-phase input power)	2198-P031 2198-P070	10.5 25.5	55	3.5 8.5	7 17	–	–
	2198-P141 2198-P208	46.9 69.2	85	15.5 23.0	31 46		
Regenerative [1] Power Supply (324…506V AC rms, three-phase input power)	2198-RP088	35.3	165	–	24	–	–
	2198-RP200	100.0	275	–	67		
	2198-RP263	176.4	440	–	119		
	2198-RP312	207.0		–	140		
Single-axis Inverters	2198-S086-ERS3 2198-S130-ERS3	2198-S086-ERS4 2198-S130-ERS4	85	14.9 22.5	29.7 44.9	60.8 91.9	121.6 183.8
	2198-S160-ERS3	2198-S160-ERS4	100	30.1	60.1	120.2	226.2
	2198-S263-ERS3 2198-S312-ERS3	2198-S263-ERS4 2198-S312-ERS4	220	45.0 56.0	90 112	212.1 271.5	371.9 441.2
Dual-axis Inverters	2198-D006-ERS3 2198-D012-ERS3 2198-D020-ERS3 2198-D032-ERS3	2198-D006-ERS4 2198-D012-ERS4 2198-D020-ERS4 2198-D032-ERS4	55	0.9 1.7 2.8 4.5	1.7 3.4 5.5 8.9	3.5 7.0 11.3 18.3	8.8 17.6 28.2 45.9
	2198-D057-ERS3	2198-D057-ERS4	85	8.0	15.9	32.5	81.3
iTRAK Power Supply	2198T-W25K-ER		100	–	–	2x12.5	2x12.5

(1) Applies when DC-bus voltage regulation is enabled. If DC-bus voltage regulation is not enabled, the input voltage range is 324….528V AC. For more information on these two modes of operation, see DC-bus Voltage Regulation on page 40.

Table 5 - Accessory Module Catalog Numbers

Accessory Modules [1]	Cat. No.	Module Width mm	System Current [2]	Rated Voltage	Capacitance
Capacitor Module	2198-CAPMOD-2240	55	104 A	276…747V DC, nom	2240 µF
Extension Module	2198-CAPMOD-DCBUS-IO				–
DC-bus Conditioner Module	2198-DCBUSCOND-RP312				

(1) Combination of any two accessory modules increases system current up to 208 A. However, modules must be mounted side-by-side and joined by two flexible bus-bars.
(2) Flexible bus-bars are included with only the 2198-CAPMOD-DCBUS-IO extension module. So, if you have two capacitor modules, two DC-bus conditioner modules, or a capacitor module and DC-bus conditioner module mounted side by side, you must order the 2198-KITCON-CAPMOD2240 or 2198-KITCON-DCBUSCOND connector set separately.

Table 6 - Shared-bus Connector Kit Catalog Numbers

Shared-bus Connector Kits Cat. No.	Drive Module Cat. No.	Application	Description
2198-TCON-24VDCIN36 (1) (2)	2198-P031, 2198-P070, 2198-P141, 2198-P208 2198-CAPMOD-2240	24V DC input power to control bus	24V DC input wiring connector
	2198-RP088, 2198-RP200, 2198-DCBUSCOND-RP312		
2198T-W25K-P-IN (1) (2)	2198T-W25K-ER, 2198-RP263, 2198-RP312, 2198-S263-ERS*x*, 2198-S312-ERS*x*		
2198-H040-P-T	2198-D006-ERS*x*, 2198-D012-ERS*x* 2198-D020-ERS*x*, 2198-D032-ERS*x* 2198-CAPMOD-2240, 2198-DCBUSCOND-RP312	Control power sharing	Control power T-connector with bus bars, 55 mm
2198-H070-P-T	2198-D057-ERS*x*, 2198-S086-ERS*x*, 2198-S130-ERS*x*	Control power sharing	Control power T-connector with bus bars, 85 mm
2198-S160-P-T	2198-S160-ERS*x*	Control power sharing	Control power T-connector with bus bars, 100 mm
2198T-W25K-P-T	2198T-W25K-ER		
2198-S312-P-T	2198-S263-ERS*x*, 2198-S312-ERS*x*	Control power sharing	Control power T-connector with bus bars, 220 mm

(1) The input wiring connector can be inserted into any drive module (mid-stream in the drive system) to begin a new 24V control bus when the maximum current value is reached. However, the input connector must always extend the 24V DC-bus from left to right. The 2198T-W25K-P-IN male plug is physically larger than the male plug on 2198-TCON-24VDCIN36.

(2) For drive module amp ratings and connector wire size information, see Control Power on page 111, and CP Connector Plug Wiring Specifications table on page 141, respectively.

Agency Compliance

If this product is installed within the European Union and has the CE mark, the following regulations apply.

ATTENTION: Meeting CE requires a grounded system, and the method of grounding the AC line filter and drive module must match. Failure to do this renders the filter ineffective and can cause damage to the filter. For grounding examples, refer to Grounded Power Configurations on page 123.

For more information on electrical noise reduction, refer to the System Design for Control of Electrical Noise Reference Manual, publication GMC-RM001.

To meet CE requirements, these requirements apply:

- Install an AC line filter (catalog number 2198-DBR*xx*-F) for input power with 50 mm (1.97 in.) minimum clearance between the 2198-P*xxx* DC-bus power supply or 2198-RP*xxx* regenerative bus supply. Minimize the cable length as much as possible.
- Bond DC-bus power supplies, regenerative bus supplies, inverter modules, capacitor modules, and line filter grounding screws by using a braided ground strap as shown in Figure 83 on page 134.
- When using the 2198-P070 DC-bus power supply above 45 °C (113 °F) with stranded input power wiring, conductors must be single-core 6 mm^2 stranded copper with 90 °C minimum rating.
- When using the 2198-RP088 regenerative power supply above 40 °C (104 °F) with stranded input power wiring, conductors must be single-core 6 mm^2 stranded copper with 90 °C minimum rating.

- Use Bulletin 2090 single motor cables with Kinetix VP motors and actuators. Use Bulletin 2090 motor power/brake and feedback cables for other compatible Allen-Bradley motors and actuators. Motor cable shield-clamp on the drive must be used.
- Combined motor power cable length for all axes on the same DC bus must not exceed:
  - 1200 m (3937 ft) for 2198-P070, 2198-P141, and 2198-P208, DC-bus power supplies and 2198-RP*xxx* regenerative bus supplies when paired with 2198-DBR*xx*-F line filters.
  - 400 m (1312 ft) for 2198-P*xxx* DC-bus power supplies when paired with 2198-DB*xx*-F line filters.
  - 400 m (1312 ft) for 2198-P031 DC-bus power supplies when paired with 2198-DB*xx*-F or 2198-DBR*xx*-F line filters.

  Drive-to-motor feedback cables must not exceed 90 m (295 ft), depending on system components.
- Motor cable length for the iTRAK power supply to iTRAK motor modules must be at least 3 m (9.8 ft), not to exceed 30 m (98.4 ft).
- Use Bulletin 2198T power cables with iTRAK systems.
- Install the Kinetix 5700 system inside an approved enclosure. Run input power wiring in conduit (grounded to the enclosure) outside of the enclosure. Separate signal and power cables.
- Segregate input power wiring from control wiring and motor cables.

Refer to Appendix A on page 341 for input power wiring and drive/motor interconnect diagrams.

Plan the Kinetix 5700 Drive System Installation

This chapter describes system installation guidelines used in preparation for mounting your Kinetix® 5700 drive system components.

Topic	Page
System Design Guidelines	39
Accessory Module Selection	57
Electrical Noise Reduction	65

ATTENTION: Plan the installation of your system so that you can perform all cutting, drilling, tapping, and welding with the system removed from the enclosure. Because the system is of the open type construction, be careful to keep metal debris from falling into it. Metal debris or other foreign matter can become lodged in the circuitry and result in damage to the components.

System Design Guidelines

Use the information in this section when planning to mount your system components on the panel.

For on-line product selection and system configuration tools, including AutoCAD (DXF) drawings of the product, refer to https://www.rockwellautomation.com/global/support/selection.page.

System Mounting Requirements

- To comply with UL and CE requirements, the Kinetix 5700 drive system must be mounted in a grounded conductive enclosure offering protection as defined in standard IEC 60529 to IP20 such that they are not accessible to an operator or unskilled person.

  To maintain the functional safety rating of the Kinetix 5700 drive system, this enclosure must be appropriate for the environmental conditions of the industrial location and provide a protection class of IP54 or higher.
- The panel you install inside the enclosure for mounting your system components must be on a flat, rigid, vertical surface that won't be subjected to shock, vibration, moisture, oil mist, dust, or corrosive vapors in accordance with pollution degree 2 (EN 61800-5-1) because the product is rated to protection class IP20 (EN 60529).

- Size the system enclosure so as not to exceed the maximum ambient temperature rating. Consider heat dissipation specifications for all system components.
- Use high-frequency (HF) bonding techniques to connect the modules, enclosure, machine frame, and motor housing, and to provide a low-impedance return path for high-frequency (HF) energy and reduce electrical noise.

  Bond the Kinetix 5700 system power supply, inverter modules, iTRAK® power supply, accessory modules, and line filter grounding screws by using a braided ground strap as shown in Figure 83 on page 134.

Refer to the System Design for Control of Electrical Noise Reference Manual, publication GMC-RM001, to better understand the concept of electrical noise reduction.

DC-bus Voltage Regulation

The 2198-P*xxx* DC-bus power supply does not regulate DC-bus voltage. As a result, the DC-bus power supply always has DC-bus voltage regulation disabled. The 2198-RP*xxx* regenerative bus supply can be configured to provide active DC-bus voltage regulation or passive AC rectification like the 2198-P*xxx* DC-bus (converter) power supply.

IMPORTANT Active or passive DC-bus voltage regulation must be determined during system configuration in the Studio 5000 Logix Designer® application.

IMPORTANT Regeneration back to the AC source is only possible when the DC-bus voltage regulation is enabled.

Converter Startup Method

The Converter Startup Method (Axis Properties>General category) specifies the method to be used to initiate transition of the regenerative converter axis from the STOPPED state to the STARTING state.

ATTENTION: To help prevent permanent inverter damage, make sure that all inverter ground jumpers are removed before enabling DC-bus voltage regulation.

Set the Converter Startup Method to one of these two settings:

- Automatic (default): After applying AC, the converter automatically transitions to the RUNNING state with active DC-bus voltage regulation loops operational
- Enable Request: After applying AC, the converter stays in the STOPPED state and performs passive AC rectification. Once it receives an Enable Request from the controller, the converter transitions to the RUNNING state with active DC-bus voltage control loops operational

In Enable Request mode, you must issue an MSO instruction (after AC is applied and CIP_Axis_State = STOPPED) to enable voltage regulation on the regenerative bus supply and an MSF instruction to disable voltage regulation.

Bus Voltage Loop Parameters

The regenerative bus supply uses an active control loop to maintain the DC bus voltage at a specified level (or reference) and has two settings for the Bus Voltage Reference Source (Axis Properties>Bus Voltage Loop category> Parameters):

- Automatic (default) setting: The converter optimizes the BusVoltageReference for the best converter performance
- Manual setting: You configure the desired BusVoltageSetPoint value for the BusVoltageReference signal

In Manual mode, the BusVoltageSetPoint must be greater than 5% of the peak input AC voltage (or it is clamped automatically) with a maximum of 747V DC.

$$\text{Bus Voltage Set Point } (V_{DC}) > \text{AC Input Voltage } (V_{RMS}) \cdot \sqrt{2} \cdot 1.05$$

Boost voltage is the difference between the rectified AC voltage and the BusVoltageSetPoint.

$$\text{Boost Voltage} = \text{Bus Voltage Set Point } (V_{DC}) - \text{AC Input Voltage } (V_{RMS}) \cdot \sqrt{2}$$

IMPORTANT Setting a manual fixed DC-bus voltage sets peak motor output power performance regardless of the variance of the input AC rms. Higher boost voltage increases Total Harmonic Distortion (THD), reduces efficiency, and increases acoustic noise, but this is normal and expected. For example, optimal operation is best achieved for 460V AC motors when the input AC rms is also at 460V AC nominal, Automatic mode is selected, and the DC-bus voltage regulates at approximately 683V DC.

Refer to Configure Regenerative Bus Supply Axis Properties on page 225 for more information.

AC Line Filter Selection

An AC line filter is required to meet CE requirements. Install an AC line filter for input power with 50 mm (1.97 in.) minimum clearance between the 2198-P*xxx* DC-bus power supply or 2198-RP*xxx* regenerative bus supply. Minimize the cable length as much as possible.

IMPORTANT AC line filters are recommended only with grounded WYE power configurations. For facility power configuration examples, see Input Power Configurations for Kinetix 5700 Power Supplies on page 123.

Table 7 - AC Line Filter Selection

DC-bus Power Supply Cat. No.	AC Line Filter (1) (2) (3) Cat. No.
2198-P031	• 2198-DBR20-F or • 2198-DB20-F
2198-P070	• 2198-DBR40-F or • 2198-DB42-F
2198-P141 2198-P208	• 2198-DBR90-F or • 2198-DB80-F
2198-P208 (2 in parallel) 2198-P208 (3 in parallel)	• 2198-DBR200-F or • 2198-DB290-F

Regenerative Bus Supply Cat. No.	AC Line Filter (1) (2) (4) Cat. No.
2198-RP088	2198-DBR40-F
2198-RP200	2198-DBR90-F
2198-RP263 2198-RP312	2198-DBR200-F

(1) The use of 2198-DBR*xx*-F line filters provide a maximum motor-power cable length of up to 1200 m (3937 ft). Maximum motor-power cable length with 2198-DB*xx*-F line filters is 400 m (1312 ft). Maximum motor-power cable length for 2198-P031 DC-bus power supplies when paired with 2198-DB*xx*-F or 2198-DBR*xx*-F line filters is with 400 m (1312 ft).

(2) See Chapter 5 beginning on page 121, for more information on maximum cable lengths and how the use of 2198-DBR*xx*-F line filters affect ground screw/jumper settings. See Kinetix Servo Drive Specifications Technical Data, publication KNX-TD003, for AC line filter specifications.

(3) When using 2198-DBR*xx*-F line filters with DC-bus power supplies, remove all inverter ground jumpers to reduce overall system leakage current.

(4) When using 2198-DBR*xx*-F line filters with regenerative bus supplies, remove all inverter ground jumpers to prevent permanent damage to the inverters.

IMPORTANT Use 2198-DB*xx*-F line filters only as field replacements in existing installations that use DC-bus power supplies and have inverter ground jumpers installed. Select 2198-DBR*xx*-F line filters for all new systems and remove inverter ground jumpers. 2198-DBR*xx*-F line filters can also be used to replace existing 2198-DB*xx*-F line filters, but you must remove the inverter ground jumpers.

AC Line Impedance Considerations

DC-bus power supplies do not require an isolation transformer for three-phase input power. Regenerative bus supplies also do not require an isolation transformer for three-phase input power unless they are connected to corner-grounded or ungrounded facility power. See Input Power Configurations for Kinetix 5700 Power Supplies on page 123 for example configurations.

IMPORTANT These recommendations are advisory and do not address all situations. Site-specific conditions must be considered for proper installation.

A transformer can be required to match the voltage requirements of the power supply to the available service. For the AC input voltage requirements, refer to the Kinetix 5700 power specifications in the Kinetix Servo Drives Technical Data, publication KNX-TD003.

IMPORTANT When using an autotransformer, make sure that the phase to neutral/ground voltage does not exceed the input voltage ratings of the power supply.

Use a safety factor of 1.5 for three-phase power (where safety factor is used to compensate for transformer, drive modules, motor losses, and to account for utilization in the intermittent operating area of the torque speed curve).

EXAMPLE Sizing a transformer to the voltage requirements of this power supply: 2198-P141: 31kW x 1.5 = 46.5 kVA transformer.

In the following use cases, an additional transformer or line reactor is required due to faults or potential damage associated with AC line disturbances:

- Installation site has switched power-factor correction capacitors.
- Installation site has lightning strikes or voltage spikes in excess of 6000V peak.
- Installation site has power interruptions or voltage dips in excess of 200V AC.
- The transformer kVA is more than 10 times larger than the drive kVA, or the percent source impedance relative to each converter is less than 0.5%.

In the following use cases, a line reactor is required due to faults associated with sharing AC line-input on multiple converters:

- Repetitive AC input line-voltage notching is present. For example, if silicon controlled rectifier drive is connected to the same AC input-power source.
  - In drive systems that include the regenerative bus supply, repetitive AC line voltage notching can cause the integrated AC line filter to overheat and result in FLT S18 converter overtemperature fault.

- Powering multiple (two or more) regenerative bus supplies from the same AC input-power source.
  - Switching ripple from each regenerative bus supply can interfere with other regenerative bus supplies on the same AC input power source.
- Powering 2198-P*xxx* DC-bus power supply and 2198-RP*xxx* regenerative bus supply from the same AC input-power source.
  - Switching ripple from the regenerative bus supply can impact the temperature of DC-bus capacitors in the DC-bus power supply. In this use case, a line reactor is required in the AC input-power string leading to the regenerative bus supply.
  - Line reactor in the AC input-power string is not required for the DC-bus power supply in this use case, but is recommended for the prevention of issues caused by other use cases.
- Powering two or three 2198-P208 DC-bus power supplies from the same AC input-power source that share the same DC-bus.
  - In this use case, a line reactor is required for each 2198-P208 DC-bus power supply to make sure that they share current more evenly.

Use these equations to calculate the impedance of the DC-bus power supply, regenerative bus supply, or transformer to check the percent source-impedance relative to the power supply to make sure it is not less than 0.5%. An additional transformer or line reactor is required in this use case.

DC-bus Power Supply or Regenerative Bus Supply Impedance (in ohms)

$$Z_{drive} = \frac{V_{line\text{-}line}}{\sqrt{3} \bullet I_{input\text{-}rating}}$$

Transformer Impedance (in ohms)

$$Z_{xfmr} = \frac{V_{line\text{-}line}}{\sqrt{3} \bullet I_{xfmr\text{-}rated}} \bullet \%\ \text{Impedance}$$

Or

$$Z_{xfmr} = \frac{(V_{line\text{-}line})^2}{VA} \bullet \%\ \text{Impedance}$$

% impedance is the nameplate impedance of the transformer.

Transformer Impedance (in ohms)

$$Z_{xfmr} = \frac{V_{line\text{-}line}}{\sqrt{3} \bullet I_{xfmr\text{-}rated}} \bullet \%\ \text{Impedance}$$

% impedance is the nameplate impedance of the transformer.

EXAMPLE The DC-bus power supply or regenerative bus supply is rated 1 Hp, 480V, 2.7 A input.

The supply transformer is rated 50,000 VA (50 kVA), 5% impedance.

$$Z_{drive} = \frac{V_{line\text{-}line}}{\sqrt{3} \bullet I_{input\text{-}rating}} = \frac{480V}{\sqrt{3} \bullet 2.7} = 102.6 \text{ Ohms}$$

$$Z_{xfmr} = \frac{(V_{line\text{-}line})^2}{VA} \bullet \% \text{ Impedance} = \frac{480^2}{50{,}000} \bullet 0.05 = 0.2304 \text{ Ohms}$$

The percent (%) impedance has to be in per unit (5% becomes 0.05) for the formula.

$$\frac{Z_{xfmr}}{Z_{drive}} = \frac{0.2304}{102.6} = 0.00224 = 0.22\%$$

0.22% is less than 0.5%. Therefore, this transformer is too large for the DC-bus power supply or regenerative bus supply. Consider adding either a line reactor or isolation transformer.

Table 8 - Bulletin 1321 Line Reactor Selection

Kinetix 5700 Power Supply	Power Supply Cat. No.	Number of Power Supplies in a Bus Group	Bulletin 1321 Line Reactor Cat. No.	Status
DC-bus Power Supply	2198-P031	1	1321-3R12-B	Recommended
	2198-P070	1	1321-3R35-B	Recommended
	2198-P141	1	1321-3R55-B	Recommended
	2198-P208	1	1321-3R80-B	Recommended
		2		Required
		3		Required
Regenerative Bus Supply	2198-RP088	1	1321-3R35-A	Recommended
	2198-RP200	1	1321-3R100-A	Recommended
	2198-RP263	1	1321-3R160-B	Recommended
	2198-RP312	1	1321-3R200-A	Recommended

See Power Wiring Examples on page 343 for AC input-power interconnect diagrams. For Bulletin 1321 line reactor specifications, see the 1321 Power Conditioning Products Technical Data, publication 1321-TD001.

IMPORTANT You can group multiple 2198-P*xxx* DC-bus power supplies on one line reactor if they do not share same DC bus. However, the line reactor percent impedance must be large enough when evaluated for each DC-bus power supply separately, not evaluated for all loads connected at once.

Circuit Breaker/Fuse Selection

The Kinetix 5700 power supplies use internal solid-state motor short-circuit protection and, when protected by suitable branch circuit protection, are rated for use on a circuit capable of delivering up to 200,000 A (fuses) and 65,000 A (circuit breakers).

Refer to Power Wiring Examples, on page 343, for the wiring diagram.

ATTENTION: Do not use circuit protection devices on the output of an AC drive as an isolating disconnect switch or motor overload device. These devices are designed to operate on sine wave voltage and the drive's PWM waveform does not allow it to operate properly. As a result, damage to the device occurs.

Table 9 - DC-bus Power Supply UL/CSA Circuit-protection Specifications

DC-bus Power Supply Cat. No.	Input Voltage (three-phase) nom	Bussmann Fuses (1) Cat. No.	Miniature CB (2) Cat. No.	Motor Protection CB, (2) Self Protected CMC Cat. No.	Molded Case CB Cat. No.
2198-P031	195…528V AC rms	LPJ-15SP (15A)	1489-M3D250	140M-D8E-C25	140G-G6C3-C25
2198-P070		LPJ-40SP (40A)	N/A	140M-F8E-C45	140G-G6C3-C50
2198-P141		LPJ-70SP (70A)	N/A	N/A	140G-G6C3-C90
2198-P208		LPJ-100SP (100A)	N/A	N/A	140G-G6C3-D12

(1) For applications requiring CSA certification, fuses (Bussmann catalog number 170M1760) must be added to the DC link between the two drive clusters when circuit breakers are used for branch circuit protection. The DC bus fuses are not required when AC line fuses are used for branch circuit protection.

(2) These Bulletin 140M circuit breakers, when used as self-protected (Type E) devices, and Bulletin 1489 circuit breakers can be used on only WYE power systems (480Y/277V).

Table 10 - Regenerative Bus Supply UL/CSA Circuit-protection Specifications

Regenerative Bus Supply Cat. No.	Input Voltage (1) (three-phase) nom	Bussmann Fuses (2) Cat. No.	Mersen Fuses Cat. No.	Miniature CB Cat. No.	Molded Case CB Cat. No.
2198-RP088	324…506V AC rms	LPJ-45SP (45A)	AJT45 (45A)	–	140G-G6C3-C60
2198-RP200		LPJ-125SP (125A)	AJT125 (125A)	–	140G-J6F3-D15
2198-RP263		LPJ-200SP (200A)	AJT200 (200A)	–	140G-K6F3-D30
2198-RP312		LPJ-250SP (250A)	AJT250 (250A)	–	140G-K6F3-D40

(1) Applies when DC-bus voltage regulation is enabled. If DC-bus voltage regulation is not enabled, then the input voltage range is 324…528V AC. For more information on these two modes of operation, see DC-bus Voltage Regulation on page 40.

(2) For applications requiring CSA certification, fuses (Bussmann catalog number 170M1760) must be added to the DC link between the two drive clusters when circuit breakers are used for branch circuit protection. The DC bus fuses are not required when AC line fuses are used for branch circuit protection.

Table 11 - DC-bus Power Supply IEC (non-UL/CSA) Circuit-protection Specifications

DC-bus Power Supply Cat. No.	Drive Voltage (three-phase) nom	DIN gG Fuses Amps, max	Miniature CB Cat. No.		Motor Protection CB Cat. No.	Molded Case CB Cat. No.
2198-P031	195…528V AC rms	16	1489-M3D250	N/A	140M-D8E-C25	140G-G6C3-C25
2198-P070		40	N/A	1492-SPM3D400	140M-F8E-C45	140G-G6C3-C50
2198-P141		75	N/A	1492-SPM3D630	140MG-H8E-C60	140G-G6C3-C90
2198-P208		110	N/A	N/A	140MG-H8E-D10	140G-G6C3-D12

Table 12 - Regenerative Bus Supply IEC (non-UL/CSA) Circuit-protection Specifications

Regenerative Bus Supply Cat. No.	Input Voltage (1) (three-phase) nom	DIN gG Fuses Amps, max	Miniature CB Cat. No.		Motor Protection CB Cat. No.	Molded Case CB Cat. No.
2198-RP088	324…506V AC rms	50	1489-M3C600	1492-SPM3C630	140MG-H8E-C60	140G-G6C3-C60
2198-RP200		125	–	–	140MG-J8E-D15	140G-J6F3-D15
2198-RP263		200	–	–	–	140G-K6F3-D30
2198-RP312		250	–	–	–	140G-K6F3-D40

(1) Applies when DC-bus voltage regulation is enabled. If DC-bus voltage regulation is not enabled, then the input voltage range is 324…528V AC. For more information on these two modes of operation, see DC-bus Voltage Regulation on page 40.

Refer to the Kinetix Servo Drives Technical Data, publication KNX-TD003, for additional power specifications for your 2198-P*xxx* DC-bus power supply and 2198-RP*xxx* regenerative bus supply.

24V Control Power Evaluation

The Kinetix 5700 drive system requires 24V DC input for its control circuitry. Due to the 24V shared-bus connection system and the 24V current requirements of the Kinetix 5700 drives, a thorough evaluation of control power is required prior to implementation. Consider the following when sizing such a system:

- Verify that the 24V DC power supply is capable of supplying the 24V current requirements of your Kinetix 5700 drive system. See Calculate 24V DC Control Power Current Demand on page 400 to determine the 24V current requirements. For systems with a high 24V current demand, consider the following:
  - Install separate 24V power supplies for each cluster or change the cluster configuration to more evenly divide the 24V current demand.
  - Install separate 24V power supplies for each Bulletin 2198 power supply and inverter.
- Verify that the wiring being used is capable of supplying the Kinetix 5700 drive system with a voltage within the 24V input-voltage range; 24V ±10% (21.6...26.4V DC). Consider the following:
  - Mount the 24V power supply as close to the Kinetix 5700 drive system as possible to minimize input voltage drop.
  - Install larger gauge wire, up to 4 mm^2 (12 AWG) and 6 mm^2 (10 AWG) for 24V control power when using the CP connectors included with the module; or use the 24V shared-bus connection system to lower the DC wire resistance with up to 10 mm^2 (6 AWG) and result in a lower voltage drop.

IMPORTANT The 24V current demand, wire gauge, and wire length all impact the voltage drop across the wiring being used. For an example, see 24V DC Voltage Drop Calculation Example on page 401.

Contactor Selection

The AC three-phase contactor control string must be wired in series with the contactor-enable relay at the CED connector. The contactor-enable relay (applies to 2198-P*xxx* DC-bus power supply and 2198-RP*xxx* regenerative bus supply) is rated at 24V DC (28V, max) and 1.0 A, max.

IMPORTANT Applying more than 28V DC control voltage or more than 1.0 A control current to the contactor can cause permanent damage to the DC-bus power supply or regenerative bus supply.

ATTENTION: Wiring the contactor-enable relay is required. To avoid personal injury or damage to the system, wire the contactor-enable relay into your control string so that:

- three-phase power is removed and the power supply is protected under various fault conditions.
- three-phase power is never applied to the Kinetix 5700 drive system before control power is applied.

Contactor with auxiliary contacts is strongly recommended when used with 2198-RP*xxx* regenerative bus supply. Wire auxiliary contact to digital input #2 (default setting) to monitor the three-phase input power. See Contactor Wiring Examples on page 358 for wiring examples.

Table 13 - DC-bus Power Supply Contactor Specifications

DC-bus Power Supply Cat. No.	Contactor (1) (2) Cat. No.	Intermediate Relay (3) Cat. No.
2198-P031	100-C16EJ10	N/A
2198-P070	100-C37EJ10	
2198-P141	100-C72DJ10	700-HB32Z24 (relay) 700-HN153 (socket)
2198-P208	100-C97DJ10	
2198-P208 (2 in parallel)	100-E190KJ11	
2198-P208 (3 in parallel)	100-E305KJ11	

(1) Auxiliary contact configuration 10 indicates there is 1 N.O. and 0 N.C. contacts. Other configurations are available.
(2) For contactors that are not Bulletin 100-E type, the integrated diode is required with the contactor coil. See Knowledgebase document 19362 for more information.
(3) These DC-bus power supplies require an additional intermediate relay used with the contactor.

Table 14 - Regenerative Bus Supply Contactor Specifications

Regenerative Bus Supply Cat. No.	Contactor (1) (2) Cat. No.	Intermediate Relay Cat. No.
2198-RP088	100-C43EJ10	N/A
2198-RP200	100-E116KJ11	
2198-RP263	100-E205KJ11	
2198-RP312	100-E265KJ11	

(1) Auxiliary contact configuration 10 indicates there is 1 N.O. and 0 N.C. contacts. 11 indicates there is 1 N.O. and 1 N.C. contact. Other configurations are available.
(2) These contactor catalog numbers include a 24V DC coil. For contactors that are not Bulletin 100-E type, see Knowledgebase document 19362 for more information.

Passive Shunt Considerations

The 2198-P*xxx* DC-bus power supplies all include an internal shunt that is wired to the shunt resistor (RC) connector at the factory. Bulletin 2198-R*xxx* external passive shunts are available to provide additional shunt capacity for applications where the internal shunt capacity is exceeded.

IMPORTANT Keep the DC-bus power supply internal shunt wires connected unless you have an external passive shunt to connect.

IMPORTANT 2198-RP*xxx* regenerative bus supplies do not support passive shunts. The active shunt (RC) connector is used for making active shunt connections.

Table 15 - DC-bus Power Supply Passive-shunt Options

DC-bus Power Supply Cat. No.	Internal Shunt Specifications		External Shunt Module Compatibility (1) Cat. No.			
	Ω	W	2198-R127	2198-R031	2198-R014	2198-R004
2198-P031	37.5	75	–	–	X	X
2198-P070			–	–	X	X
2198-P141	13.5	200	X	X	X	X
2198-P208			X	X	X	X

(1) Shunt resistor selection is based on the needs of your actual hardware configuration.

Catalog numbers 2198-R014, 2198-R031, and 2198-R127 are composed of resistor coils that are housed inside an enclosure. Catalog number 2198-R004 is a shunt resistor without an enclosure.

Figure 18 - External Passive Shunts

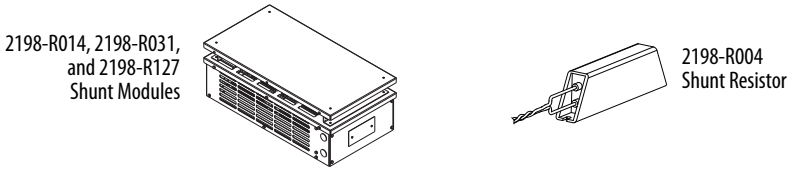

External Shunt Module Specifications

Shunt Module Cat. No.	Resistance Ω	Continuous Power W	Weight, approx kg (lb)
2198-R004	33	400	1.8 (4.0)
2198-R014	9.4	1400	9.1 (20)
2198-R031	33	3100	16.8 (37)
2198-R127 (1)	13	12,700	22.2 (49)

(1) This product presents a lift hazard. To avoid personal injury, use care when lifting the product.

How the Bulletin 2198-R*xxx* shunts connect to the 2198-P*xxx* DC-bus power supply is explained in External Passive-shunt Connections on page 177 and illustrated with interconnect diagrams in Passive Shunt Wiring Examples on page 359.

Active Shunt Considerations

External active shunts are required in the following use cases:

- The 2198-RP*xxx* regenerative bus supply provides DC-bus power while DC-bus regulation is not enabled.
- One permanent magnet motor runs above its bus overvoltage speed. See Field Weakening Mode on page 462 for a description of this feature.
- One permanent magnet motor drives a vertical load that could make the motor accelerate above the bus overvoltage speed during a fault condition.
- Any condition where total shared DC-bus regenerative power is greater than the 2198-RP*xxx* regenerative bus supply capacity. For example, consider a peak-power stopping condition.
- The 2198-RP*xxx* regenerative bus supply is operating with DC-bus regulation enabled and the regenerative bus supply loses three-phase AC input power, 24V DC input power, or has a fault condition.

ATTENTION: To avoid damage to the Kinetix 5700 drive system, wire the active shunt thermal switch to a digital input on the power supply and configure the Shunt Thermal Switch OK function in the Logix Designer application.

ATTENTION: DC-bus failure can cause damage to all drive modules in the bus group, not just the inverter connected to the motor.

Active shunts are available from the Rockwell Automation Encompass™ partner Powerohm Resistors, Inc. See http://www.powerohm.com for more information on Powerohm active shunts.

IMPORTANT Powerohm Bulletin PKB*xxx* active shunt modules use built-in internal brake resistors. Bulletin PWB*xxx* active shunt modules require appropriately sized external brake resistors.

Table 16 - Compatible Active Shunt Specifications (internal brake resistor)

Kinetix 5700 Power Supply	Powerohm Resistors Cat. No. (1)	Input Voltage, nom	Turn -on Bus Voltage	Continuous Power kW	Resistance (internal) Ω	Resistance (minimum) Ω	Continuous Current Amps	Peak Current Amps
2198-P*xxx* DC-bus power supply or 2198-RP*xxx* regenerative bus supply when DC-bus regulation is not enabled.	PKB005	240V (DC-bus power supply only) or 480V AC	750V DC	1.50	108	–	2.00	6.9
	PKB010			2.06	52.7	–	2.75	14.2
	PKB050			7.00	10.5	–	9.30	71.4
2198-RP*xxx* regenerative bus supply when DC-bus regulation is enabled.	PKB005-800		800V DC	1.50	108	–	1.88	7.4
	PKB010-800			2.06	52.7	–	2.58	15.2
	PKB050-800			7.00	10.5	–	8.72	76.2

(1) How the Powerohm PKB*xxx* shunts connect to the 2198-P*xxx* DC-bus power supply and 2198-RP*xxx* regenerative bus supply is explained in External Active-shunt Connections on page 178 and illustrated with interconnect diagrams in Active Shunt Wiring Examples on page 360.

Table 17 - Compatible Active Shunt Specifications (no internal brake resistor)

Kinetix 5700 Power Supply	Powerohm Resistors Cat. No. (1)	Input Voltage, nom	Turn -on Bus Voltage	Continuous Power kW	Resistance (internal) Ω	Resistance (minimum) Ω	Continuous Current Amps	Peak Current Amps
2198-P*xxx* DC-bus power supply or 2198-RP*xxx* regenerative bus supply when DC-bus regulation is not enabled.	PWB035	480V AC	750V DC	26.25	–	7.5	35	100
	PWB110			82.5	–	2.5	110	300
2198-RP*xxx* regenerative bus supply when DC-bus regulation is enabled.	PWB035-800		800V DC	26.25	–	8.0	35	100
	PWB110-800			82.5	–	2.7	110	300

(1) How the Powerohm PWB*xxx* shunts connect to the 2198-P*xxx* DC-bus power supply and 2198-RP*xxx* regenerative bus supply is explained in External Active-shunt Connections on page 178 and illustrated with interconnect diagrams in Active Shunt Wiring Examples on page 360.

ATTENTION: Do not use Powerohm active-shunt modules at input line voltages that exceed 528V AC. Active-shunt thermal-overload shutdown can occur if input line voltage exceeds 528V AC.

See External Active-shunt Connections on page 178, when making active shunt connections.

Enclosure Selection

This example is provided to assist you in sizing an enclosure for your Kinetix 5700 drive system. You need heat dissipation data from all components planned for your enclosure to calculate the enclosure size (refer to Table 18).

With no active method of heat dissipation (such as fans or air conditioning) either of the following approximate equations can be used.

Metric	Standard English
$A = \frac{0.38Q}{1.8T - 1.1}$	$A = \frac{4.08Q}{T - 1.1}$
Where T is temperature difference between inside air and outside ambient (°C), Q is heat generated in enclosure (Watts), and A is enclosure surface area (m^2). The exterior surface of all six sides of an enclosure is calculated as:	Where T is temperature difference between inside air and outside ambient (°F), Q is heat generated in enclosure (Watts), and A is enclosure surface area (ft^2). The exterior surface of all six sides of an enclosure is calculated as:
$A = 2dw + 2dh + 2wh$	$A = (2dw + 2dh + 2wh) /144$
Where d (depth), w (width), and h (height) are in meters.	Where d (depth), w (width), and h (height) are in inches.

If the maximum ambient rating of the Kinetix 5700 drive system is 50 °C (122 °F) and if the maximum environmental temperature is 20 °C (68 °F), then T=30. In this example, the total heat dissipation is 416 W (sum of all components in enclosure). So, in the equation below, T=30 and Q=416.

$$A = \frac{0.38\,(416)}{1.8\,(30) - 1.1} = 2.99\ m^2$$

In this example, the enclosure must have an exterior surface of at least 2.99 m^2. If any portion of the enclosure is not able to transfer heat, do not include that value in the calculation.

Because the minimum cabinet depth to house the Kinetix 5700 system (selected for this example) is 300 mm (11.8 in.), the cabinet needs to be approximately 1500 x 700 x 300 mm (59.0 x 27.6 x 11.8 in.) HxWxD.

$$1.5 \times (0.300 \times 0.70) + 1.5 \times (0.300 \times 2.0) + 1.5 \times (0.70 \times 2.0) = 3.31\ m^2$$

Because this cabinet size is considerably larger than what is necessary to house the system components, it can be more efficient to provide a means of cooling in a smaller cabinet. Contact your cabinet manufacturer for options available to cool your cabinet.

Table 18 - Power Dissipation Specifications

DC-bus Power Supply Cat. No.	Usage as % of Rated Power Output (watts)				
	20%	**40%**	**60%**	**80%**	**100%**
2198-P031	97	101	105	109	113
2198-P070	108	119	130	140	151
2198-P141	249	267	286	304	323
2198-P208	265	294	323	352	380
Regenerative Bus Supply Cat. No.					
2198-RP088	253	399	544	690	835
2198-RP200	532	832	1132	1432	1732
2198-RP263	850	1261	1672	2083	2494
2198-RP312	1037	1576	2115	2654	3193
Dual-axis Inverter Cat. No.					
2198-D006-ERS*x*	17	29	41	53	65
2198-D012-ERS*x*	34	58	82	106	130
2198-D020-ERS*x*	52	84	116	148	180
2198-D032-ERS*x*	100	155	210	265	320
2198-D057-ERS*x*	252	354	456	558	660
Single-axis Inverter Cat. No.					
2198-S086-ERS*x*	190	255	325	400	475
2198-S130-ERS*x*	225	340	460	590	725
2198-S160-ERS*x*	270	420	570	760	950
2198-S263-ERS*x*	556	759	989	1245	1529
2198-S312-ERS*x*	610	883	1200	1561	1965
iTRAK Power Supply Cat. No.					
2198T-W25K-ER	206	272	338	404	470
Capacitor Module Cat. No.					
2198-CAPMOD-2240	28	34	42	51	62
2198-CAPMOD-DCBUS-IO	1.1	1.4	1.6	2.1	2.5
DC-bus Conditioner Module Cat. No.					
2198-DCBUSCOND-RP312	1.4	2.1	3.2	4.7	6.7

Minimum Clearance Requirements

This section provides information to assist you in sizing your cabinet and positioning your Kinetix 5700 drive system:

- Additional clearance is required for cables and wires or the shared-bus connection system connected to the top of the drive modules.
  - Accessory modules require extra clearance above for wiring DC-bus stud connections and installing the cover.
- Additional clearance is required if other devices are installed above and/or below the drive module and have clearance requirements of their own.
  - Accessory modules require extra clearance to route DC-bus wiring into or away from the drive system.
- Additional clearance left and right of the drive module is required when mounted adjacent to noise sensitive equipment or clean wire ways.
- The recommended minimum cabinet depth is 300 mm (11.81 in.).

Figure 19 - Minimum Clearance Requirements

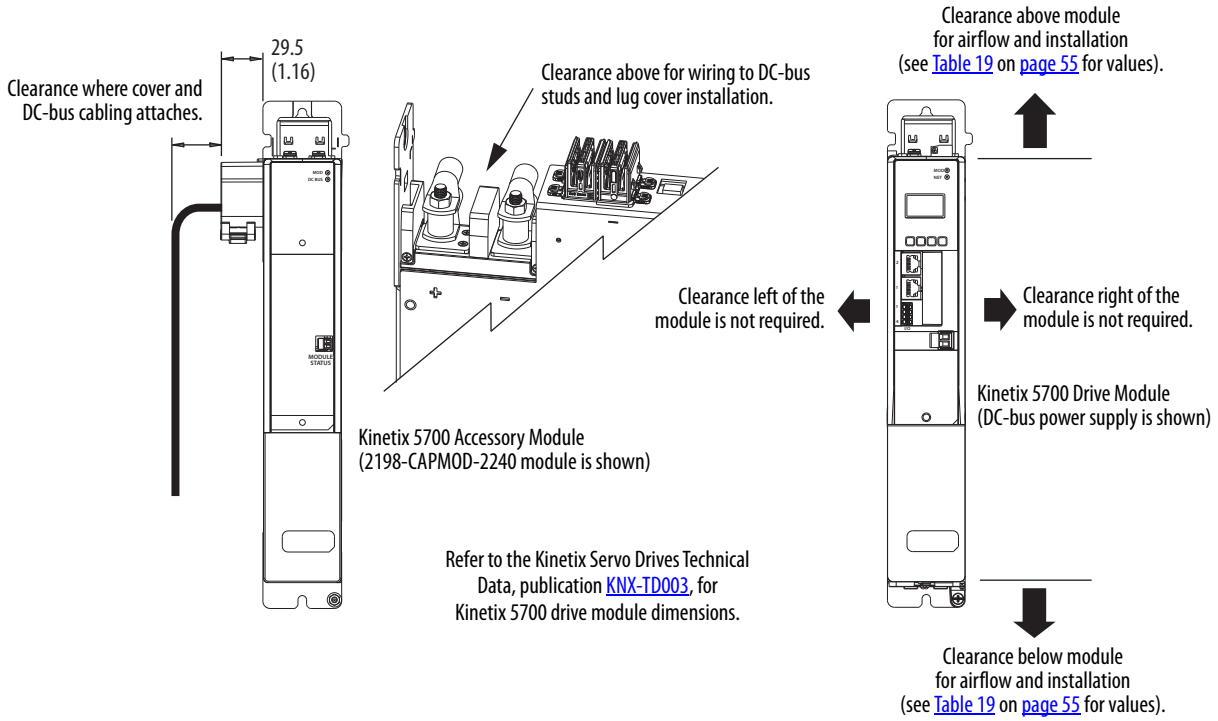

IMPORTANT Mount the drive module in an upright position as shown. Do not mount the module on its side.

See the Kinetix 5700 Drive Module Clearance Specifications table on page 55 for clearance specifications.

Table 19 - Kinetix 5700 Drive Module Clearance Specifications

Kinetix 5700 Drive Modules	Drive Module Cat. No.	Clearance Above, min mm (in.)	Clearance Below, (1) min mm (in.)
DC-bus power supply	2198-P031 2198-P070 2198-P141 2198-P208	40 (1.57)	100 (3.94)
Regenerative bus supply	2198-RP088 2198-RP200	40 (1.57)	100 (3.94)
			150 (5.91)
	2198-RP263 2198-RP312	80 (3.15)	200 (7.87)
Single-axis inverters	2198-S086-ERS*x* 2198-S130-ERS*x* 2198-S160-ERS*x*	40 (1.57)	185 (7.28)
	2198-S263-ERS*x* 2198-S312-ERS*x*	80 (3.15)	200 (7.87)
Dual-axis inverters	2198-D006-ERS*x* 2198-D012-ERS*x* 2198-D020-ERS*x* 2198-D032-ERS*x* 2198-D057-ERS*x*	40 (1.57)	100 (3.94)
iTRAK power supply	2198T-W25K-ER	40 (1.57)	100 (3.94)
Capacitor module	2198-CAPMOD-2240	115 (4.53)	100 (3.94)
Extension module	2198-CAPMOD-DCBUS-IO		
DC-bus conditioner module	2198-DCBUSCOND-RP312		

(1) Additional clearance can be required depending on the actual wiring harness being installed.

In multi-axis shared-bus configurations, drive modules must be spaced (left to right) by aligning the zero-stack tab and cutout. Install the AC line filter (required for CE) with 50 mm (1.97 in.) minimum clearance between the power supply and filter or between filters, when more than one filter is used. Minimize the cable length as much as possible.

Figure 20 - Shared-bus and Line Filter Clearance Requirements

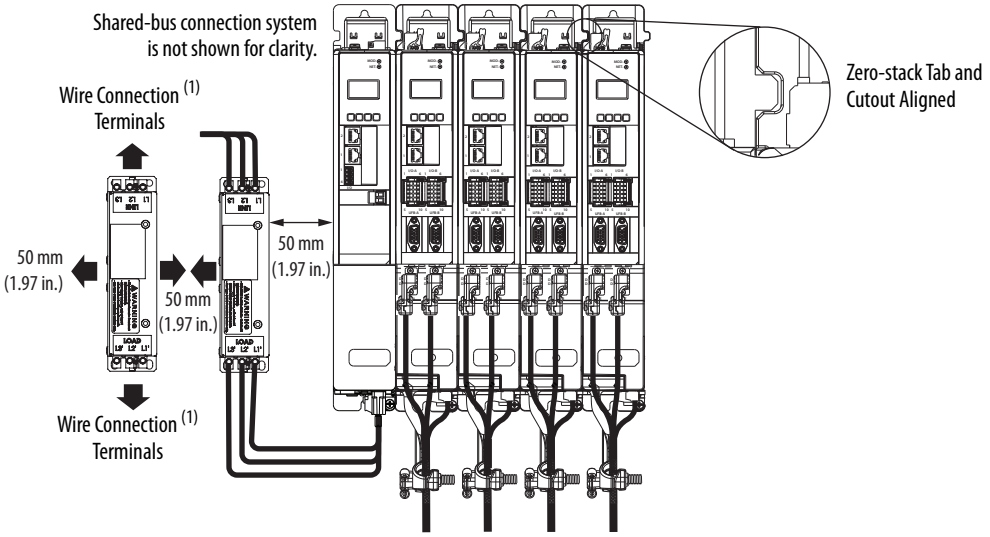

(1) Clearance required at the terminals for NEC specified bend radius depends on the wire size in use.

Multi-axis Shared DC-Bus Configurations

The Kinetix 5700 shared DC-bus can be supplied by the following sources:

- Single 2198-P*xxx* DC-bus power supply
- Multiple 2198-P208 DC-bus power supplies (up to three are possible)
- Single 2198-RP*xxx* regenerative bus supply
- Multiple 8720MC-RPS regenerative power supplies

Table 20 - Shared DC-bus Terminology

Term	Definition
DC-bus group	Drive modules that are all connected to the same DC bus.
Cluster	Group of power supply and/or drive modules that are directly connected together via Kinetix 5700 DC bus-bars only.
Extended cluster	Group of drive modules that are directly connected together via Kinetix 5700 DC bus-bars and connected to the power supply cluster via customer-supplied DC-bus cable.
Power supply cluster	The cluster that contains the AC to DC converter (power supply).
Extended DC-bus	When 2 drive clusters are part of the same DC-bus group joined by the DC bus-bars and customer-supplied DC-bus cable.

The Kinetix 5700 DC-bus power is shared in the following ways:

- Across drive clusters by DC-bus links (included with the drive module).
- From the power supply cluster to an extended cluster by connection points provided on accessory modules.

System Sizing Considerations

Multi-axis Kinetix 5700 shared-bus drive systems require thorough evaluation to make sure each drive will perform as expected. Consider the following when sizing your system to determine the appropriate configuration:

Consider the following to determine your system configuration:

- Determine motor/drive combinations for full-motor performance
- No more than three 2198-P208 DC-bus power supplies can be used to increase the converter power
- Define the DC-bus groups
- Calculate system and external-bus capacitance
- Calculate the total motor-power cable length
- Calculate the 24V DC control-power current demand
- If using the 24V DC shared-bus connection system to distribute control input power to a cluster of drive modules, current from the 24V power supply must not exceed 40 A
- Calculate the 24VDC voltage drops
- Minimize drive-to-motor cable lengths. Overall system design can significantly limit the drive-to-motor cable lengths.

See Appendix C on page 395 for more information and sizing examples. See Appendix D on page 405 for more information on cable lengths.

Accessory Module Selection

The requirements for when to use accessory modules vary depending on whether your system is powered by the 2198-P*xxx* DC-bus power supply or 2198-RP*xxx* regenerative bus supply.

8720MC-RPS regenerative power supplies follow the same requirements as 2198-RP*xxx* regenerative bus supplies for accessory modules needed for extended clusters. See 8720MC-RPS wiring examples beginning on page 352.

Table 21 - Introduction to Kinetix 5700 Accessory Modules

Accessory Module Cat. No.	Accessory Module	Description
2198-CAPMOD-2240	Capacitor Module	Use for energy storage and to extend the DC-bus voltage to another inverter cluster. Modules are zero-stacked with servo drives and use the shared-bus connection system to extend the external DC-bus voltage in applications up to 104 A. Can parallel with itself or with another accessory module for up to 208 A.
2198-CAPMOD-DCBUS-IO	Extension Module	The extension module, paired with a capacitor module or DC-bus conditioner module, is used to extend the DC-bus voltage to another inverter cluster in systems with ≥104 A current and up to 208 A.
2198-DCBUSCOND-RP312	DC-bus Conditioner Module	Decreases the voltage stress on insulation components in an inverter system with long cable lengths and used to extend the DC-bus voltage to another inverter cluster. Modules are zero-stacked with servo drives and use the shared-bus connection system to extend the external DC-bus voltage in applications up to 104 A. Can parallel with itself or with another accessory module for applications up to 208 A.

On the following pages (by power supply) are system configurations showing which accessory modules are required. The examples account for single (power supply) clusters, extended clusters, maximum system current, the input-power ground configuration, and total motor-cable length. Also included are flowcharts to help you determine your accessory module requirements.

DC-bus Power Supply Systems

The following system configurations illustrate the minimum number of accessory modules required.

Figure 21 - DC-bus Power Supply Example/Extended Cluster (104 A, max)

This example includes:
- 1 Bus group
- 2 Drive clusters

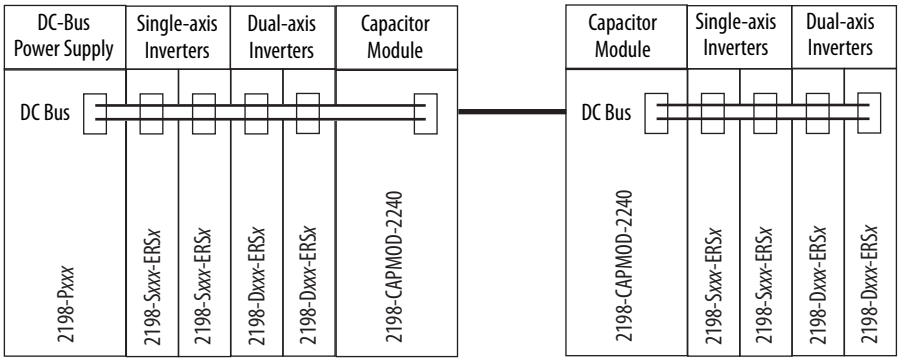

Figure 22 - DC-bus Power Supply Example/Multiple Capacitor Modules

This example includes:
- 1 Bus group
- 1 Drive cluster

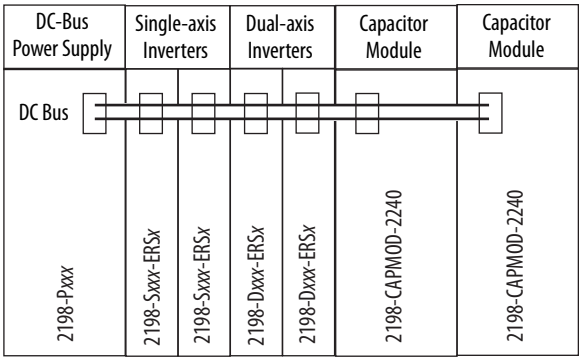

IMPORTANT In both of these examples, the Kinetix 5700 drive system includes two accessory modules per cluster. Flexible bus bars are included with only the 2198-CAPMOD-DCBUS-IO extension module. So, if you have two capacitor modules, two DC-bus conditioner modules, or a capacitor module and DC-bus conditioner module mounted side by side, you must order the 2198-KITCON-CAPMOD2240 or 2198-KITCON-DCBUSCOND connector set separately.

Figure 23 - Multiple DC-bus Power Supply Example/Extended Cluster (208 A, max)

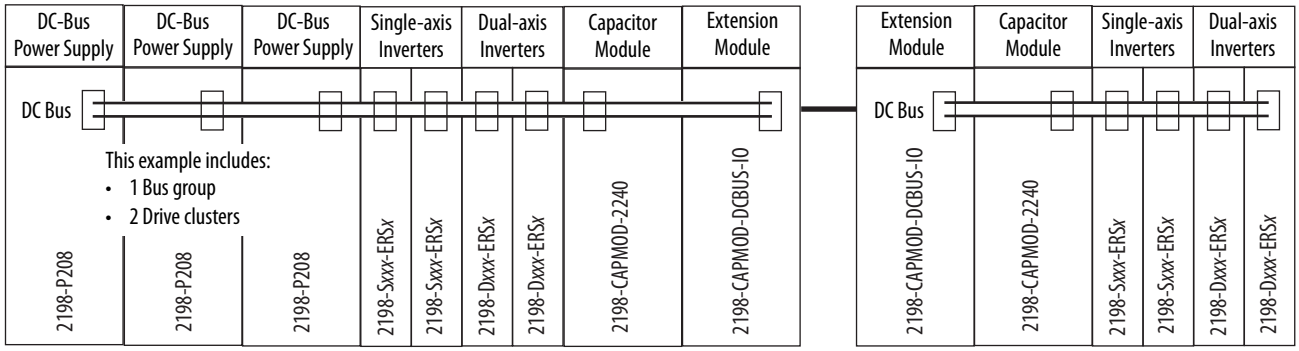

IMPORTANT The systems that are shown are typical. The maximum number of inverter modules depends on the maximum system capacitance precharge capability of the power supply. With multiple 2198-P208 modules, there is more precharge capability. When there are two or three DC-bus power supplies, they must be catalog number 2198-P208.

Refer to Appendix C on page 395 for more system sizing information.

Regenerative Bus Supply Systems

Mount the 2198-DCBUSCOND-RP312 DC-bus conditioner module on the far right or far left of any 2198-RP*xxx* regenerative bus supply system cluster, depending on the input power configuration.

- A DC-bus conditioner module is required on all extended clusters
- A DC-bus conditioner module is required on the power supply cluster if the total motor cable length connected to the power supply cluster is ≥400 m (1312 ft)
- A DC-bus conditioner module is required on each cluster of drive systems with impedance-grounded input power
- When a DC-bus conditioner module is installed and there is no use-case for installation, the module does not provide any benefit

The following system configurations illustrate the minimum number of accessory modules required.

Figure 24 - Regenerative Bus Supply Example/Single Cluster

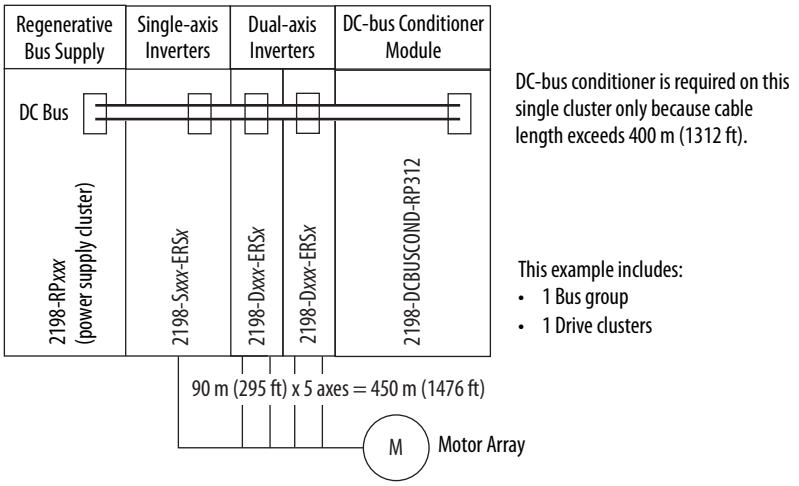

Figure 25 - Regenerative Bus Supply Example/Extended Cluster

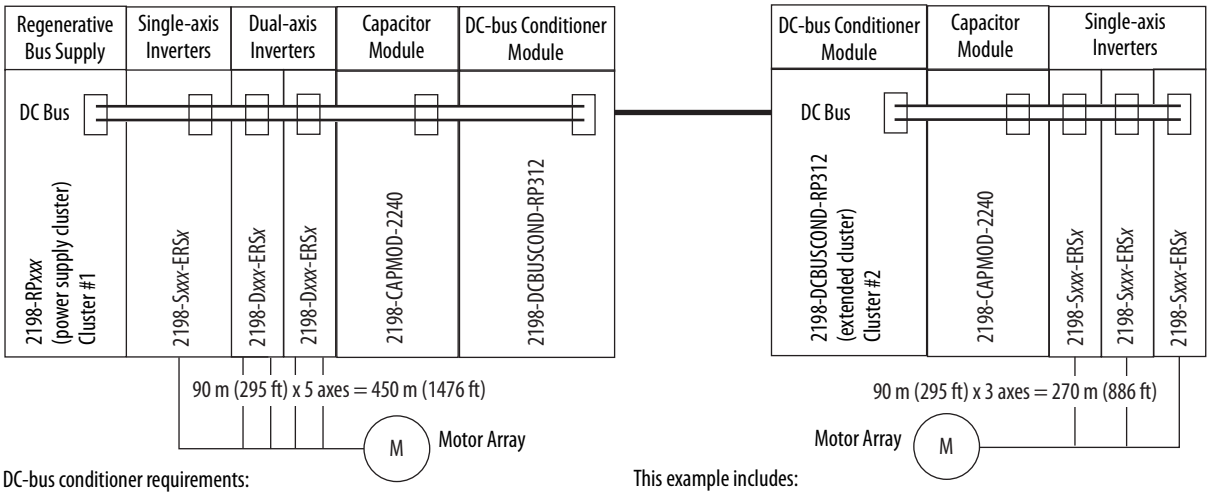

DC-bus conditioner requirements:
- Required on Cluster #1 because cable length exceeds 400 m (1312 ft)
- Required on Cluster #2 because it's an extended cluster

This example includes:
- 1 Bus group
- 2 Drive clusters

Figure 26 - Regenerative Bus Supply Example/Extended Cluster/104 A System

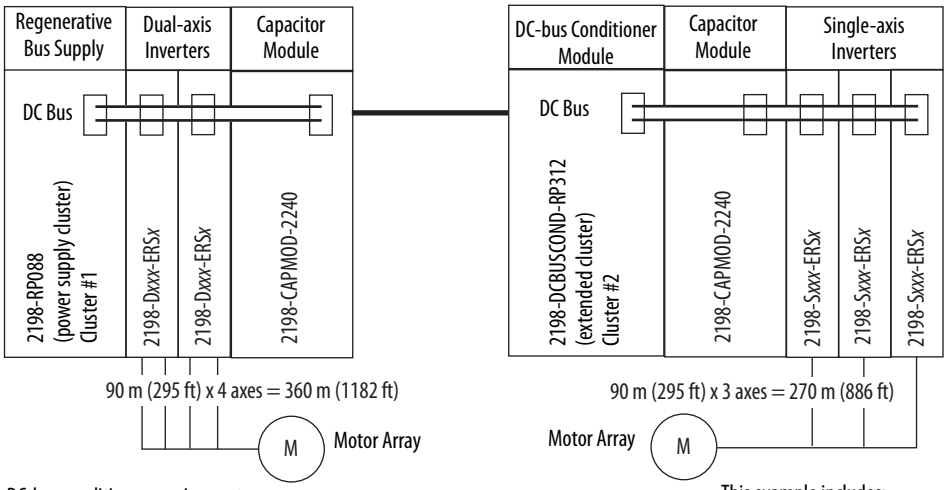

DC-bus conditioner requirements:
- Not required on Cluster #1 because cable length <400 m (1312 ft)
- Required on Cluster #2 because it's an extended cluster

Extension module not required because the power supply cluster < 104 A

This example includes:
- 1 Bus group
- 2 Drive clusters

Figure 27 - Regenerative Bus Supply Example/Extended Cluster/208 A System

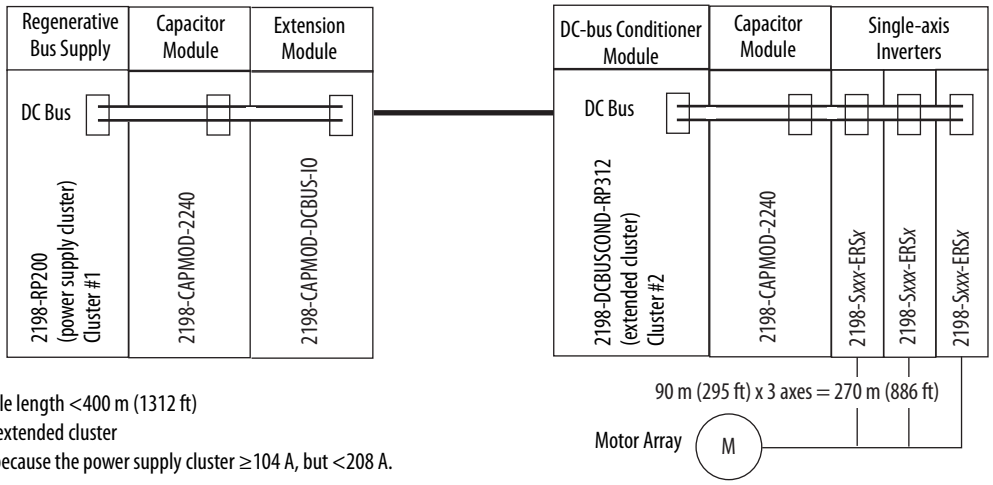

This example includes:
- 1 Bus group
- 2 Drive clusters

DC-bus conditioner requirements:
- Not required on Cluster #1 because cable length <400 m (1312 ft)
- Required on Cluster #2 because it's an extended cluster

Extension module required on Cluster #1 because the power supply cluster ≥104 A, but <208 A.

Figure 28 - Regenerative Bus Supply Example/Two Extended Clusters/208 A, max

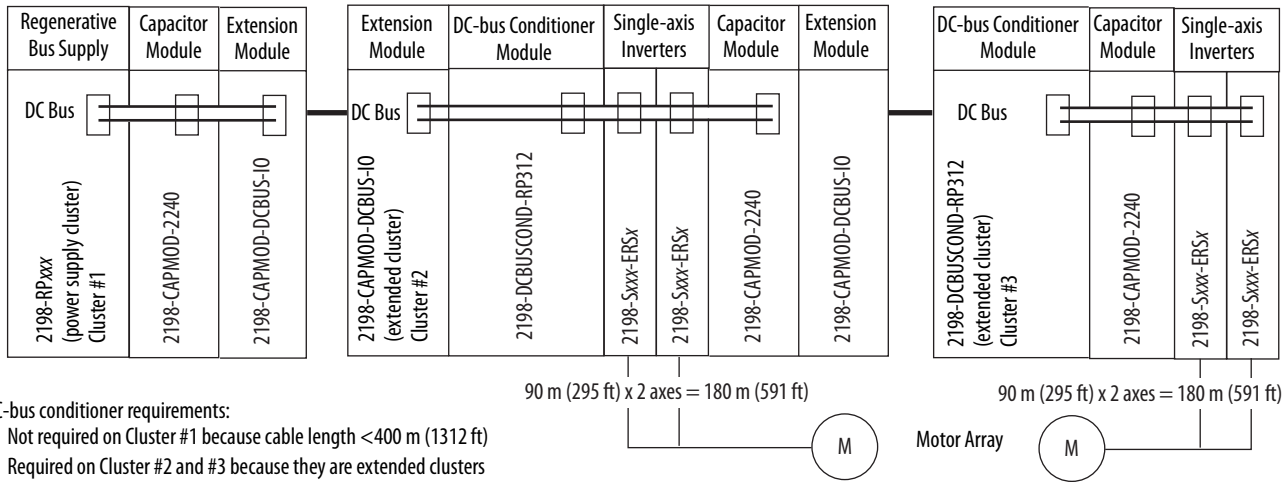

DC-bus conditioner requirements:
- Not required on Cluster #1 because cable length <400 m (1312 ft)
- Required on Cluster #2 and #3 because they are extended clusters

Extension module required on Cluster #1 and #2 because the entire extended bus system must have the same current rating (208 A, in this example).

Figure 29 - Regenerative Bus Supply Example/Center Power Supply Cluster/104 A, max

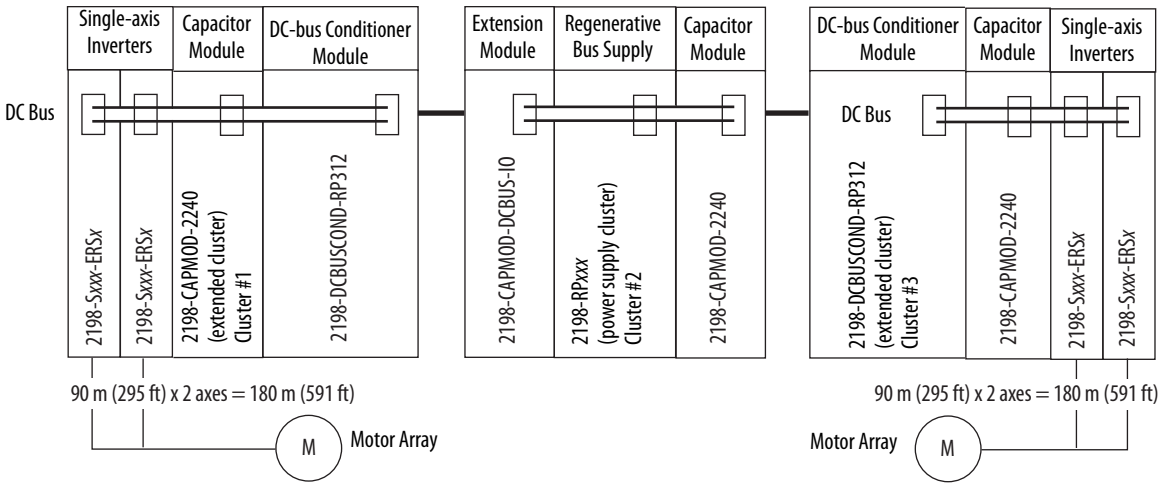

DC-bus conditioner requirements:
- Not required on Cluster #2 because cable length <400 m (1312 ft)
- Required on Cluster #1 and #3 because they are extended clusters

Extension module required on Cluster #2 for making DC-bus connections to Cluster #1.

This example includes:
- 1 Bus group
- 3 Drive clusters

IMPORTANT In Figure 29, the Kinetix 5700 drive system includes two accessory modules in each of the clusters. Flexible bus bars are included with only the 2198-CAPMOD-DCBUS-IO extension module. So, if you have two capacitor modules, two DC-bus conditioner modules, or a capacitor module and DC-bus conditioner module mounted side by side, you must order the 2198-KITCON-CAPMOD2240 or 2198-KITCON-DCBUSCOND connector set separately.

Figure 30 - Regenerative Bus Supply Example/Impedance-grounded Input Power

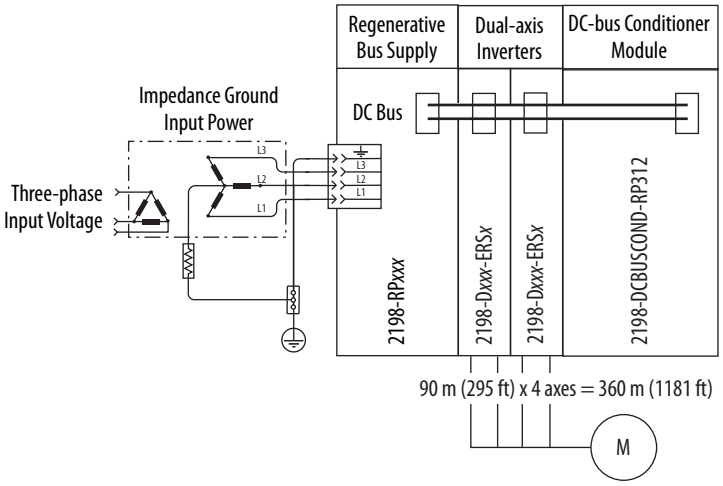

DC-bus conditioner requirements for impedance-grounded systems:
- Required on single cluster system
- Required on each cluster of multi-cluster systems

IMPORTANT The regenerative bus supply is not compatible with the iTRAK power supply.

8720MC-RPS or Other Regenerative Power Supply

The following system configurations illustrate the minimum number of accessory modules required.

This example includes:
- 1 Bus group
- 1 Drive cluster

Figure 31 - Regenerative Power Supply Example (104 A, max)

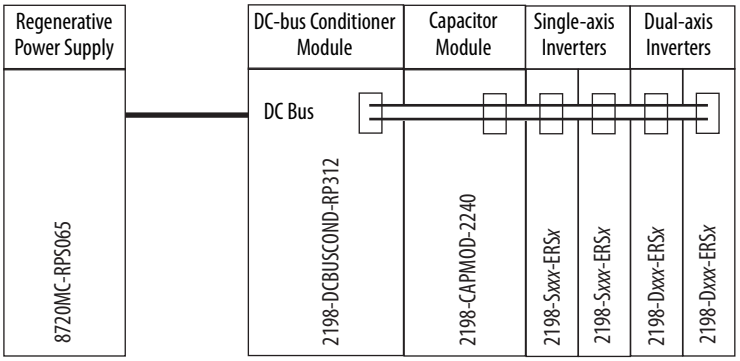

DC-bus conditioner is required only if the total power-cable length exceeds 400 m (1312 ft).

IMPORTANT In both of these examples, the Kinetix 5700 drive system includes two accessory modules. Flexible bus bars are included with only the 2198-CAPMOD-DCBUS-IO extension module. So, if you have two capacitor modules, two DC-bus conditioner modules, or a capacitor module and DC-bus conditioner module mounted side by side, you must order the 2198-KITCON-CAPMOD2240 or 2198-KITCON-DCBUSCOND connector set separately.

This example includes:
- 1 Bus group
- 1 Drive cluster

Figure 32 - Regenerative Power Supply Example Power (208 A, max)

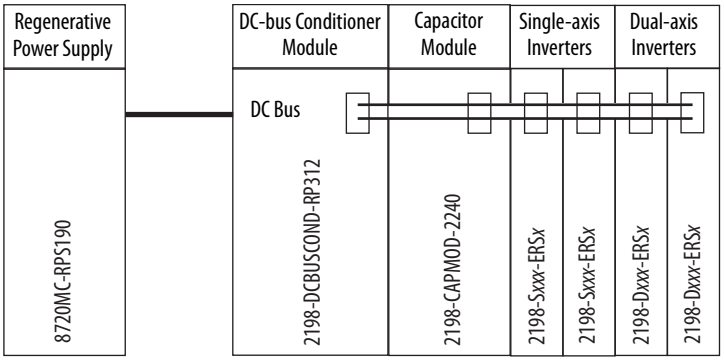

DC-bus conditioner is required because this is a 208 A system.
DC-bus conditioner is also required if the total power-cable length exceeds 400 m (1312 ft).

IMPORTANT The 8720MC-RPS power supply is not compatible with the iTRAK power supply.

Accessory Module Flowcharts

The following flowcharts are designed to help you determine the minimum number of accessory modules that are needed for your application.

IMPORTANT Specific system demands can justify additional accessory modules based on the previously mentioned benefits.

In this flowchart, a 2198-P*xxx* DC-bus power supply or 2198-RP*xxx* regenerative bus supply supplies DC-bus power to a single cluster of drives.

System variables that you need to know include the following:

- The type of AC to DC converter used
- The input power ground configuration
- The total motor cable length

Figure 33 - Single-cluster Drive System

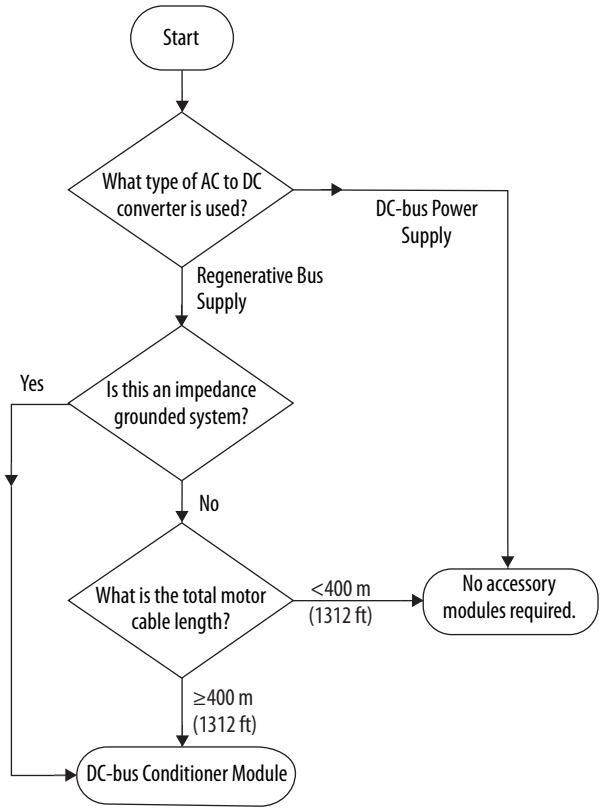

In this flowchart, a 2198-P*xxx* DC-bus power supply or 2198-RP*xxx* regenerative bus supply supplies DC-bus power to a multi-cluster drive system.

TIP The 'power supply' cluster includes the 2198-P*xxx* DC-bus power supply or 2198-RP*xxx* regenerative bus supply. Extended clusters are part of the same DC-bus group and connected to the power supply cluster via stud terminals that are available on accessory modules.

System variables that you need to know include the following:

- The type of AC to DC converter used
- The input-power ground configuration
- The external DC-bus current
- The total motor-cable length of the power supply cluster

Figure 34 - Multi-cluster Drive System

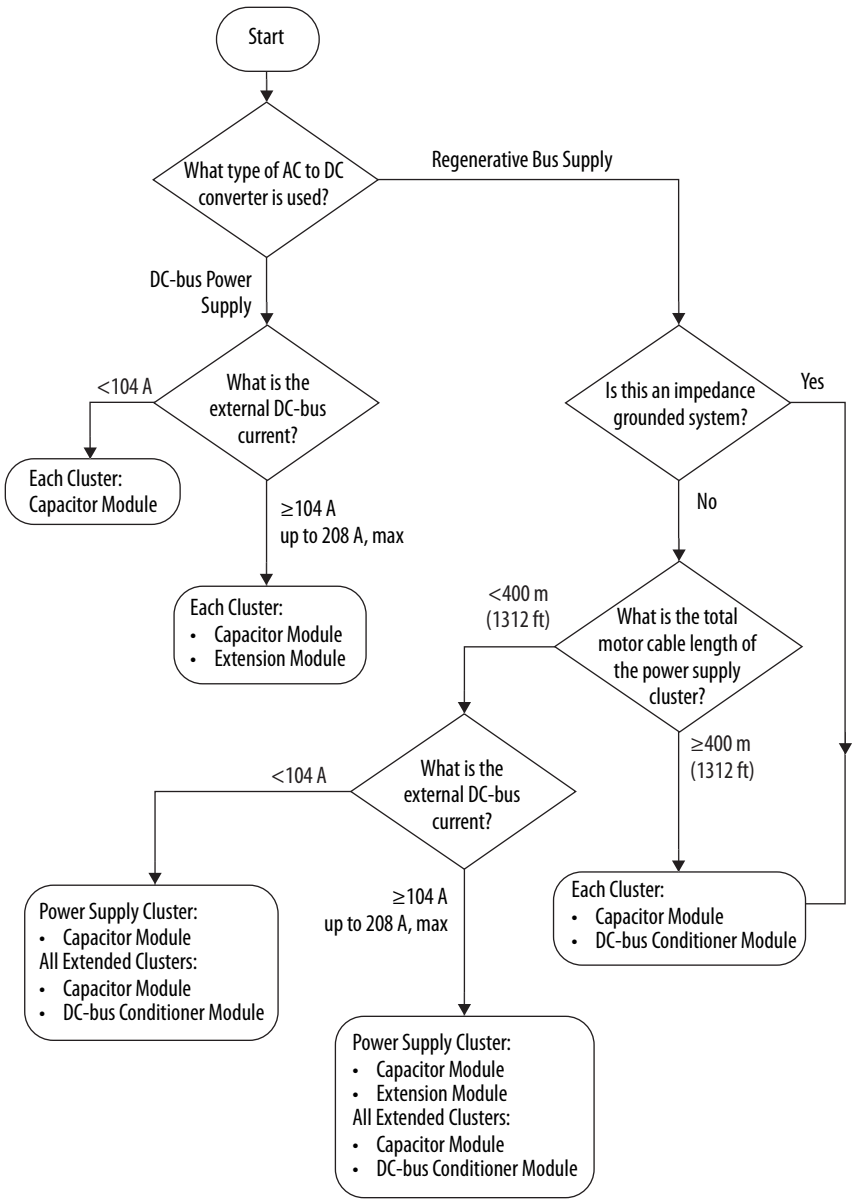

Electrical Noise Reduction

This section outlines best practices that minimize the possibility of noise-related failures as they apply specifically to Kinetix 5700 system installations. For more information on the concept of high-frequency (HF) bonding, the ground plane principle, and electrical noise reduction, refer to the System Design for Control of Electrical Noise Reference Manual, publication GMC-RM001.

HF Bond for Modules

Bonding is the practice of connecting metal chassis, assemblies, frames, shields, and enclosures to reduce the effects of electromagnetic interference (EMI).

Unless specified, most paints are not conductive and act as insulators. To achieve a good bond between the drive module and subpanel, surfaces need to be paint-free or plated. Bonding metal surfaces creates a low-impedance return path for high-frequency energy.

IMPORTANT To improve the bond between the drive module and subpanel, construct your subpanel out of zinc plated (paint-free) steel.

Improper bonding of metal surfaces blocks the direct return path and allows high-frequency energy to travel elsewhere in the cabinet. Excessive high-frequency energy can effect the operation of other microprocessor controlled equipment.

These illustrations show details of recommended bonding practices for painted panels, enclosures, and mounting brackets.

Figure 35 - Recommended Bonding Practices for Painted Panels

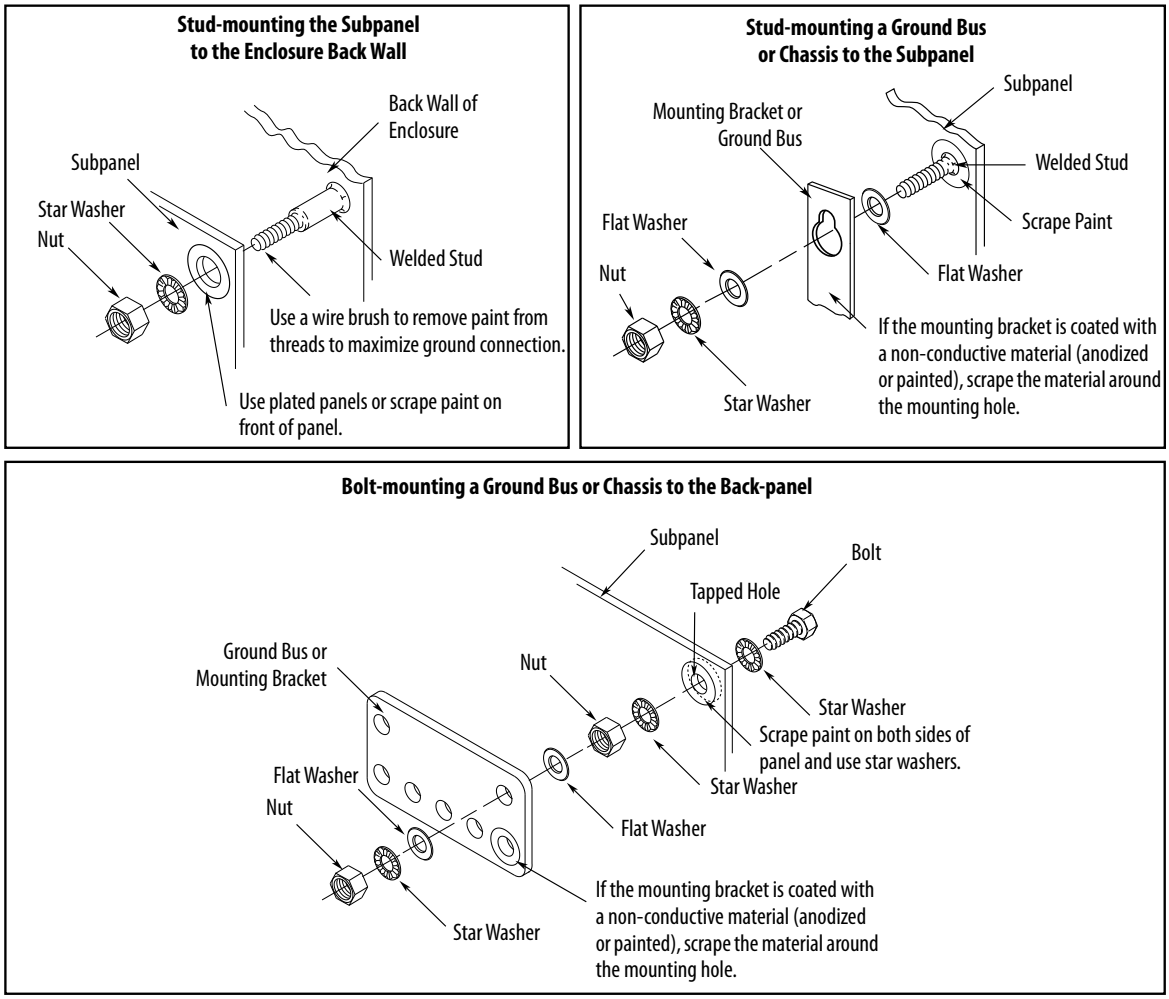

HF Bond for Multiple Subpanels

Bonding multiple subpanels creates a common low impedance exit path for the high-frequency energy inside the cabinet. Subpanels that are not bonded together do not necessarily share a common low impedance path. This difference in impedance can affect networks and other devices that span multiple panels:

- Bond the top and bottom of each subpanel to the cabinet by using 25.4 mm (1.0 in.) by 6.35 mm (0.25 in.) wire braid. As a rule, the wider and shorter the braid is, the better the bond.
- Scrape the paint from around each fastener to maximize metal-to-metal contact.

Figure 36 - Multiple Subpanels and Cabinet Recommendations

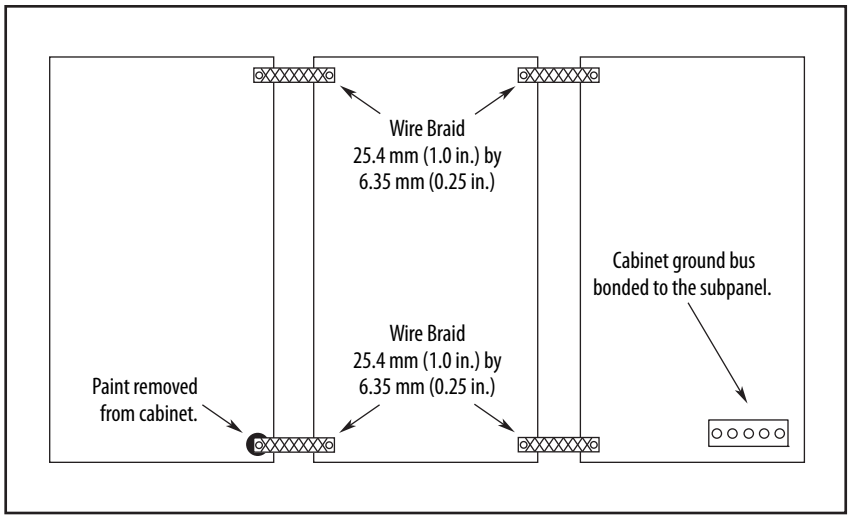

Establish Noise Zones

The Kinetix 5700 DC-bus system power can be supplied by the 2198-P*xxx* DC-bus power supply or 2198-RP*xxx* regenerative bus supply.

Observe these guidelines when routing cables used in the Kinetix 5700 system:

- The clean zone (C) is right of the drive system and includes the digital inputs wiring and Ethernet cable (gray wireway).
- The dirty zone (D) is left and below the drive system (black wireways) and includes the circuit breakers, 24V DC power supply, safety, and motor cables.
- The very dirty zone (VD) is limited to where the AC (EMC) line filter VAC output jumpers over to the DC-bus power supply. Shielded cable is required only if the very dirty cables enter a wireway.

Figure 37 - Noise Zones (DC-bus power supply)

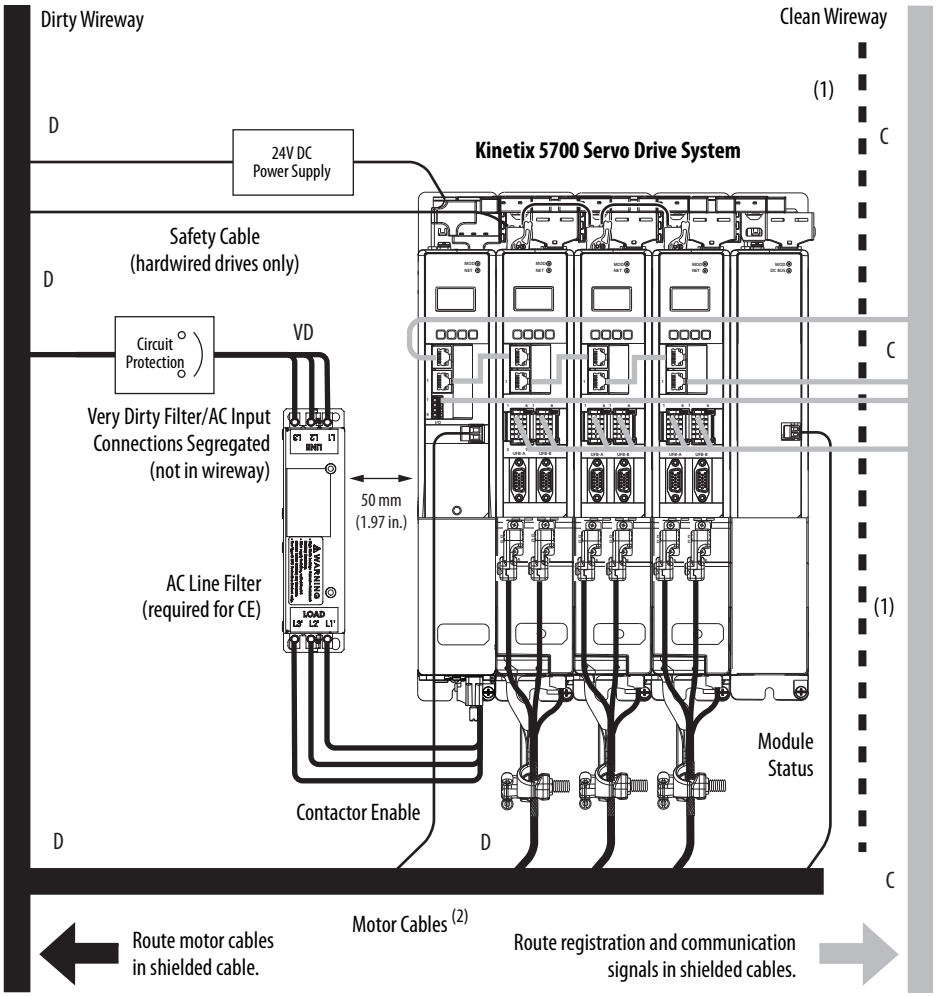

(1) When space to the right of the module does not permit 150 mm (6.0 in.) segregation, use a grounded steel shield instead. For examples, refer to the System Design for Control of Electrical Noise Reference Manual, publication GMC-RM001.

(2) When the 2198-H2DCK feedback converter kit or 2198-K57CK-D15M universal feedback kit is used, feedback cable routes in the clean wireway.

Figure 38 - Noise Zones (regenerative bus supply)

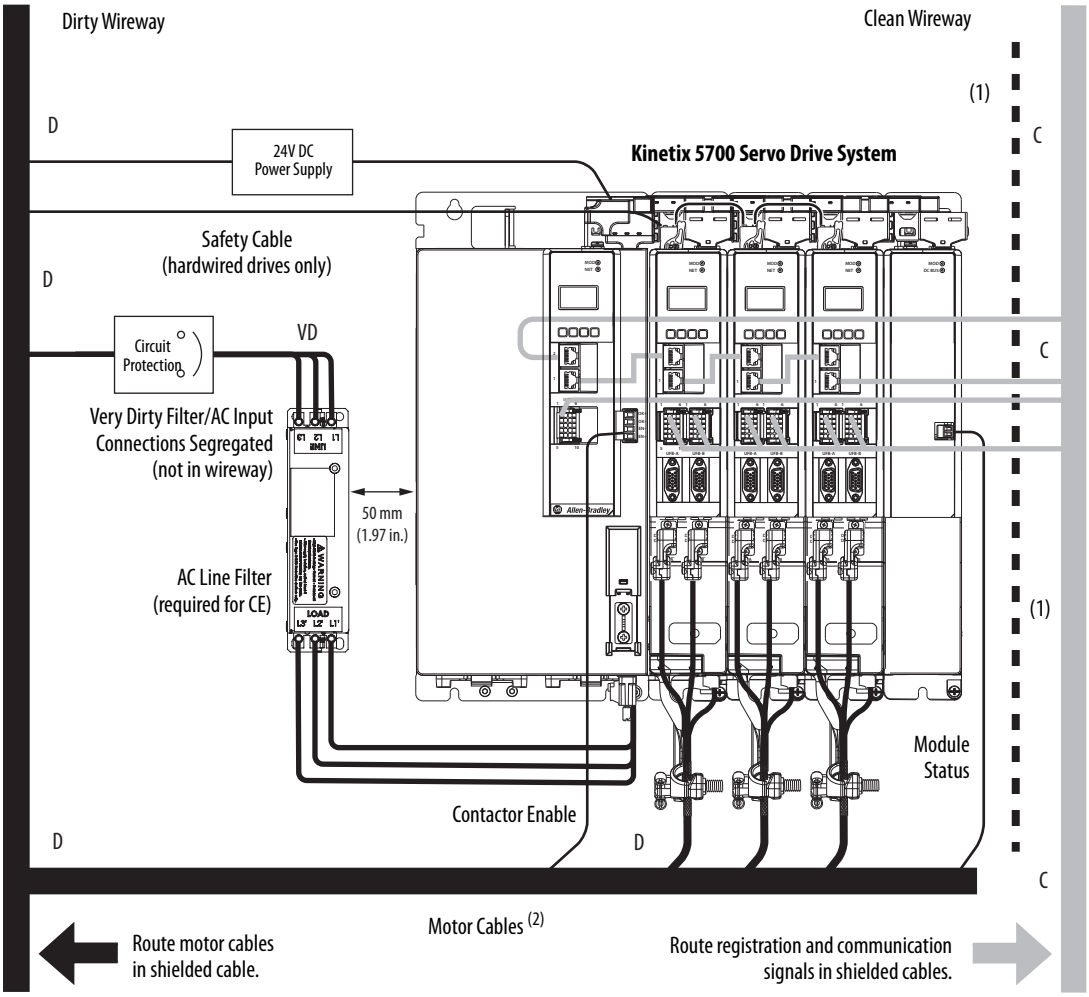

(1) When space to the right of the module does not permit 150 mm (6.0 in.) segregation, use a grounded steel shield instead. For examples, refer to the System Design for Control of Electrical Noise Reference Manual, publication GMC-RM001.

(2) When the 2198-H2DCK feedback converter kit or 2198-K57CK-D15M universal feedback kit is used, feedback cable routes in the clean wireway.

Cable Categories for Kinetix 5700 Systems

These tables indicate the best zone for running cables and wires. The tables also show how the use of ferrite sleeves and shielded cable can reduce the noise effects of dirty and very-dirty wires and cables.

Table 22 - DC-bus Power Supply or Regenerative Bus Supply

Wire/Cable	Power Supply Cat. No.	Connector	Zone			Method	
			Very Dirty	Dirty	Clean	Ferrite Sleeve	Shielded Cable
L1, L2, L3 (shielded cable)	2198-P*xxx* 2198-RP*xxx*	IPD	–	X	–	–	X
L1, L2, L3 (unshielded cable)			X	–	–	–	–
DC-/DC+ (DC bus)	2198-P*xxx* 2198-RP*xxx*	DC	Bus-bar only, no wiring connector.				
DC+/SH (passive shunt)	2198-P*xxx*	RC	–	X	–	–	–
DC+/DC– (active shunt)	2198-RP*xxx*		–		–	–	–
CONT EN– and CONT EN+ (M1 contactor)	2198-P*xxx* 2198-RP*xxx*	CED	–	X	–	–	–
CONV OK– and CONV OK+	2198-RP*xxx*		–		–	–	–
24V DC	2198-P*xxx* 2198-RP*xxx*	CP	–	X	–	–	–
Dedicated digital inputs	2198-P*xxx* 2198-RP*xxx*	IOD	–	X	–	–	–
Ethernet (shielded cable)	2198-P*xxx* 2198-RP*xxx*	PORT1 PORT2	–	–	X	–	X

Table 23 - Dual-axis and Single-axis Inverters

Wire/Cable		Connector	Zone			Method	
			Very Dirty	Dirty	Clean	Ferrite Sleeve	Shielded Cable
DC-/DC+ (DC bus)		DC	Bus-bar only, no wiring connector.				
U, V, W (motor power)	Kinetix VPL, VPC-Q VPF, VPH, VPS motors	MP	–	X	–	–	X
Motor feedback		MF		X			X
Motor brake		BC		X			X
U, V, W (motor power)	Kinetix VPC-S/Y, MPL, MPM, MPF, MPS motors	MP	–	X	–	–	X
Motor feedback		MF or UFB		–	X		X
Motor brake		BC		X	–		X
24V DC		CP	–	X	–	–	–
Safety enable for safe torque-off (hardwired)		STO	–	X	–	–	–
Registration input		IOD	–	–	X	–	X
Dedicated digital inputs (other than registration inputs)			–	X	–	–	–
Ethernet (shielded cable)		PORT1 PORT2	–	–	X	–	X

Table 24 - iTRAK Power Supply

Wire/Cable	Connector	Zone			Method	
		Very Dirty	Dirty	Clean	Ferrite Sleeve	Shielded Cable
DC-/DC+ (DC bus)	DC	Bus-bar only, no wiring connector.				
iTRAK DC-bus output A and B	IDC	–	X	–	–	X
24V DC control input power	CP	–	X	–	–	X
iTRAK 24V DC control output power A and B	ICP					
iTRAK digital inputs	IOD	–	–	X	–	–
iTRAK ready output	IR	–	–	X	–	–
Ethernet (shielded cable)	PORT1 PORT2	–	–	X	–	X

Table 25 - Capacitor Module or DC-bus Conditioner Module

Wire/Cable	Connector	Zone			Method	
		Very Dirty	Dirty	Clean	Ferrite Sleeve	Shielded Cable
DC-/DC+ (DC bus)	DC	Bus-bar only, no wiring connector.				
DC-/DC+	M8 Stud	–	X	–	–	–
24V DC	CP	–	X	–	–	–
Module status	MS	–	X	–	–	–

Table 26 - Extension Module

Wire/Cable	Connector	Zone			Method	
		Very Dirty	Dirty	Clean	Ferrite Sleeve	Shielded Cable
DC-/DC+ (DC bus)	DC	Bus-bar only, no wiring connector.				
DC-/DC+	M8 Stud	–	X	–	–	–

Noise Reduction Guidelines for Drive System Accessories

Refer to this section when mounting an AC (EMC) line filter or external shunt resistor for guidelines designed to reduce system failures caused by excessive electrical noise.

AC Line Filters

Observe these guidelines when mounting your AC (EMC) line filter (refer to the figure on page 68 for an example):

- With grounded WYE power, as shown in Figure 72 on page 123, mount the AC line filter on the same panel as the power supply with 50 mm (1.97 in.) minimum clearance between the drive and filter.
- Minimize the line filter cable length as much as possible.
- Good HF bonding to the panel is critical. For painted panels, refer to the examples on page 66.
- Segregate input and output wiring as far apart as possible.

External Passive Shunt Modules

Observe these guidelines when mounting your 2198-R014, 2198-R031, or 2198-R127 external passive shunt modules:

- Mount the shunt module outside of the drive system enclosure.
- Mount the shunt module so that wiring routes in the very dirty zone inside the drive system enclosure.
- Keep unshielded wiring as short as possible, not to exceed 3 m (9.8 ft). Keep shunt wiring as flat to the cabinet as possible.

Figure 39 - External Passive Shunt Module Mounted On Top of the Drive System Enclosure

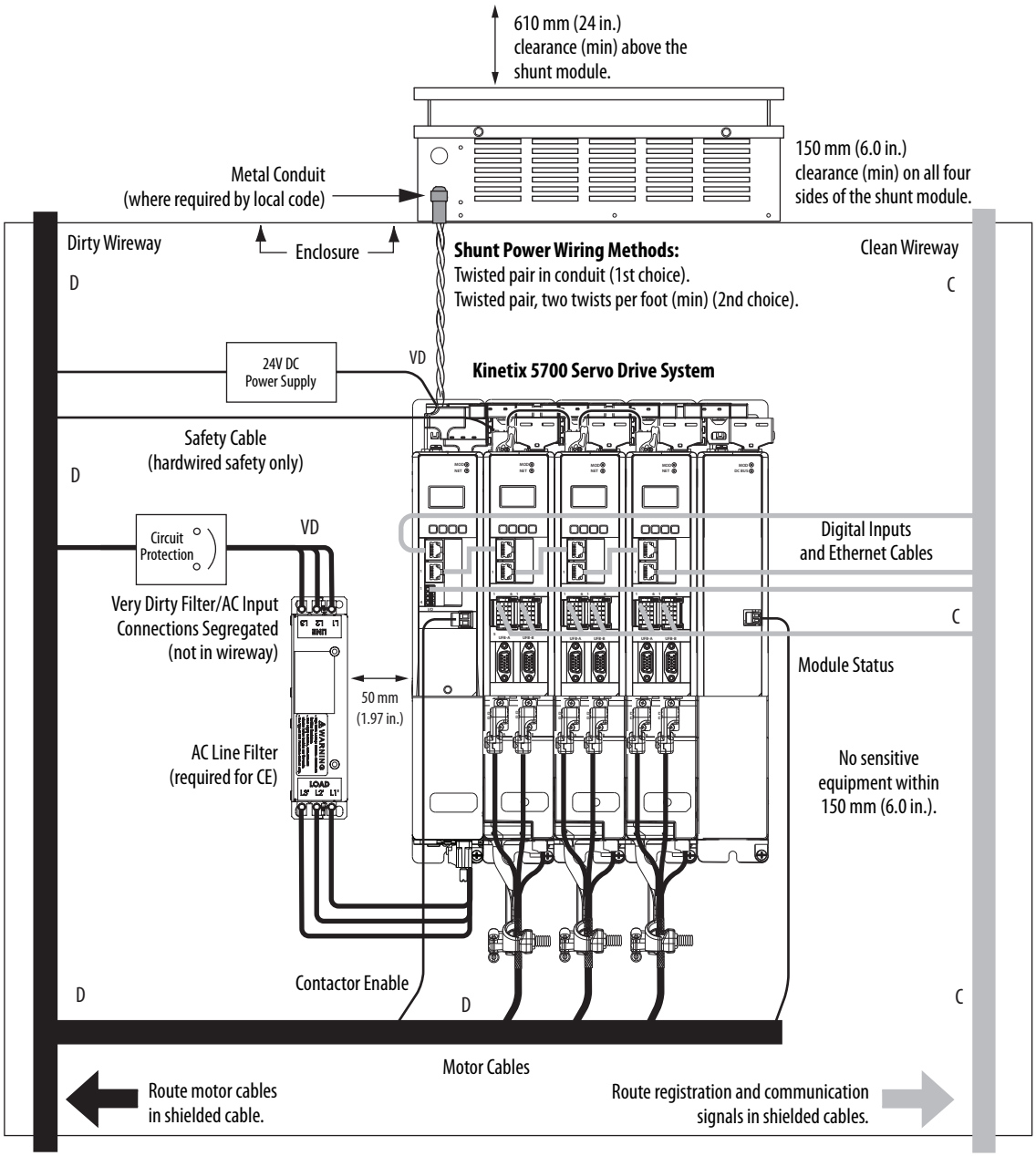

Observe these guidelines when mounting your 2198-R004 external passive shunt resistor:

- Mount the shunt resistors anywhere in the dirty zone, but as close to the Kinetix 5700 power supply as possible.
- Route the shunt power wires with other very dirty wires.
- Keep unshielded wiring as short as possible, not to exceed 457 mm (18 in.). Keep shunt wiring as flat to the cabinet as possible.
- Separate shunt power cables from other sensitive low-voltage signal cables.

Figure 40 - External Shunt Resistor Mounted Inside the Drive System Enclosure

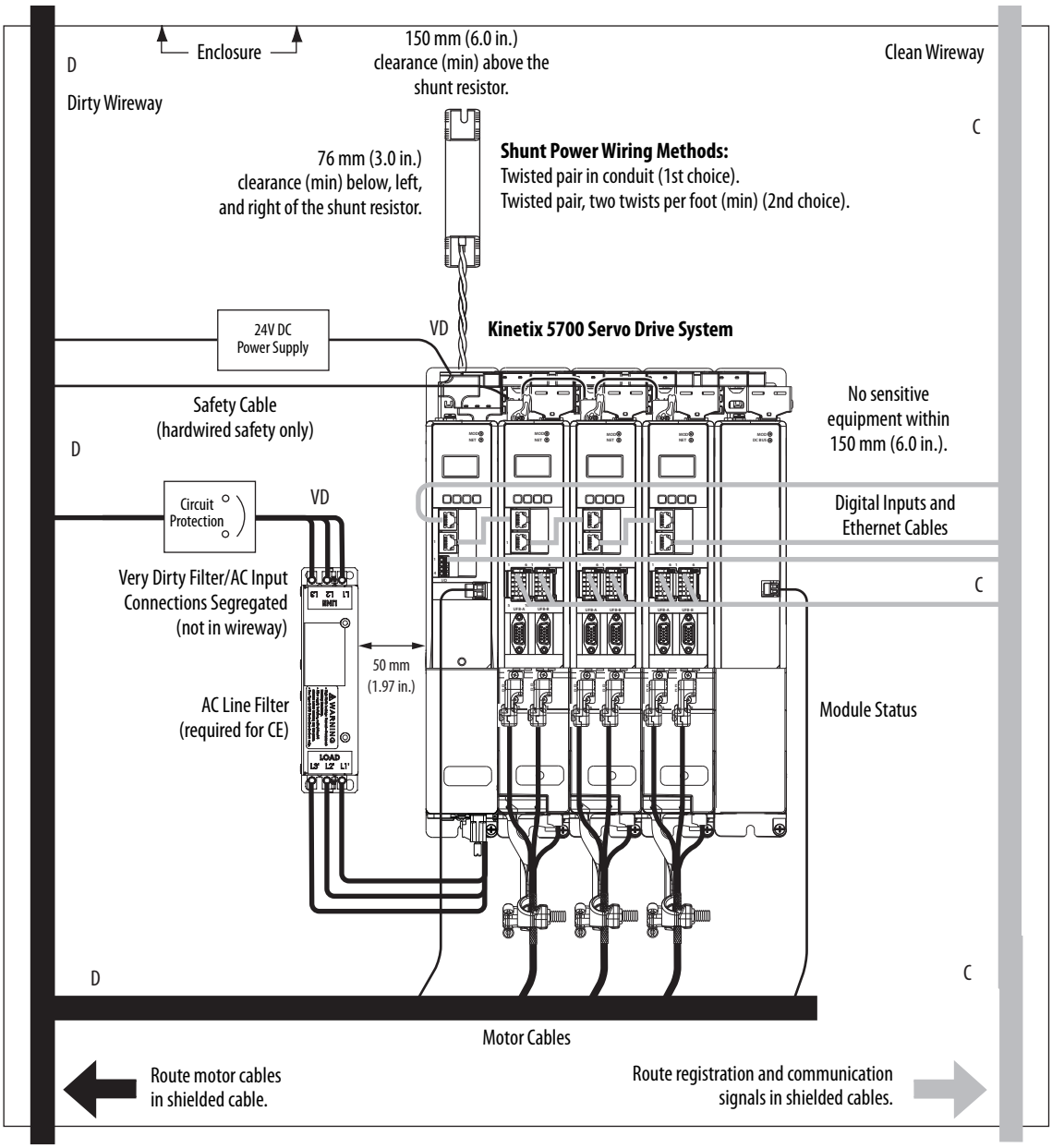

External Active Shunt Modules

Observe these guidelines when mounting external active shunt outside the drive system enclosure:

- Mount the shunt module so that wiring routes in the very dirty zone inside the drive system enclosure.
- Keep unshielded wiring as short as possible, not to exceed 3 m (9.8 ft). Keep shunt wiring as flat to the cabinet as possible.

Figure 41 - External Active Shunt Module Mounted On Top of the Drive System Enclosure

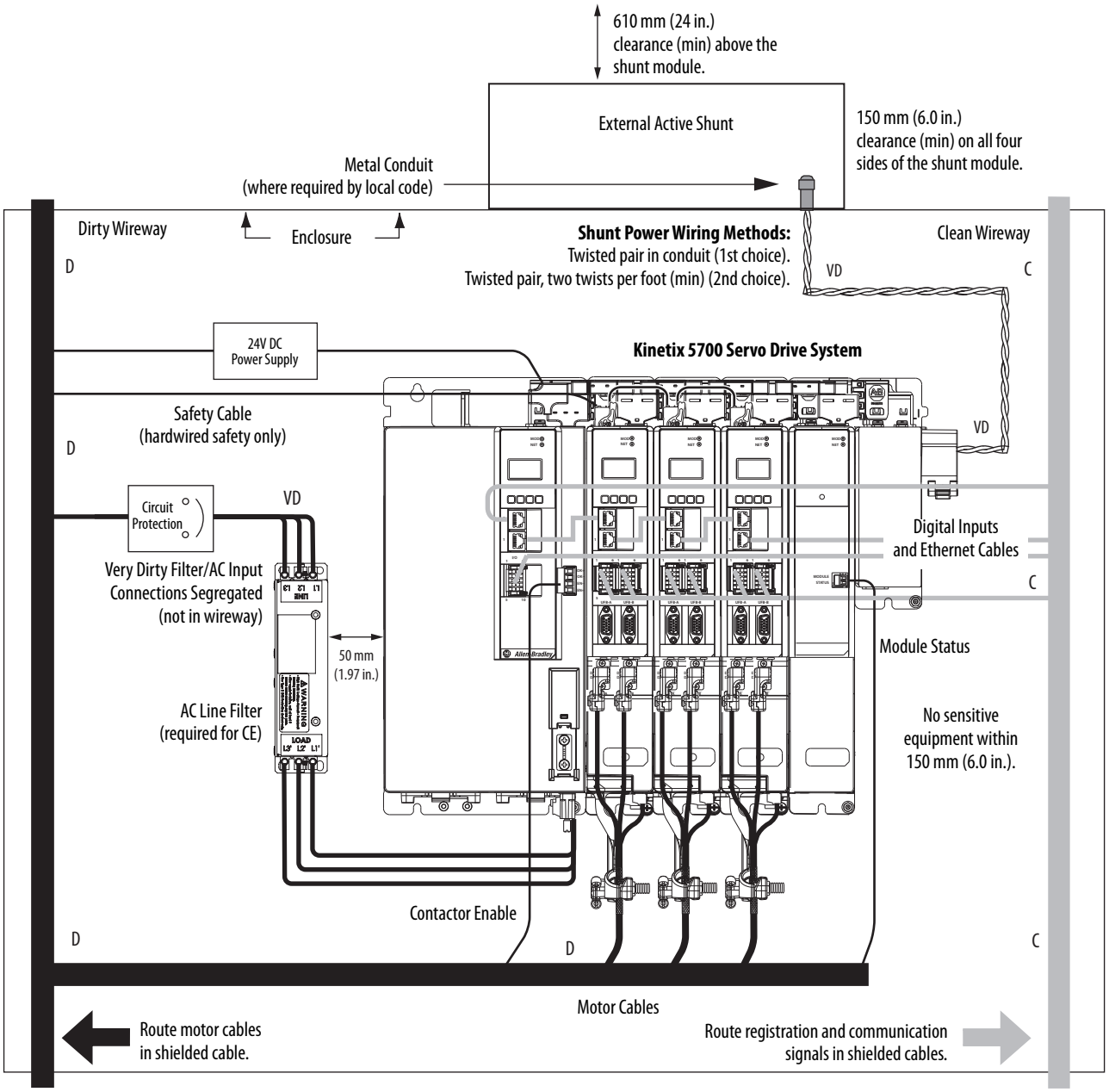

Observe these guidelines when mounting your external active shunt inside the drive system enclosure:

- Mount the shunt resistors anywhere in the dirty zone, but as close to the Kinetix 5700 power supply as possible.
- Route the shunt power wires with other very dirty wires.
- Keep unshielded wiring as short as possible, not to exceed 3 m (9.8 ft). Keep shunt wiring as flat to the cabinet as possible.
- Separate shunt power cables from other sensitive low-voltage signal cables.

Figure 42 - External Active Shunt Mounted Inside the Drive System Enclosure

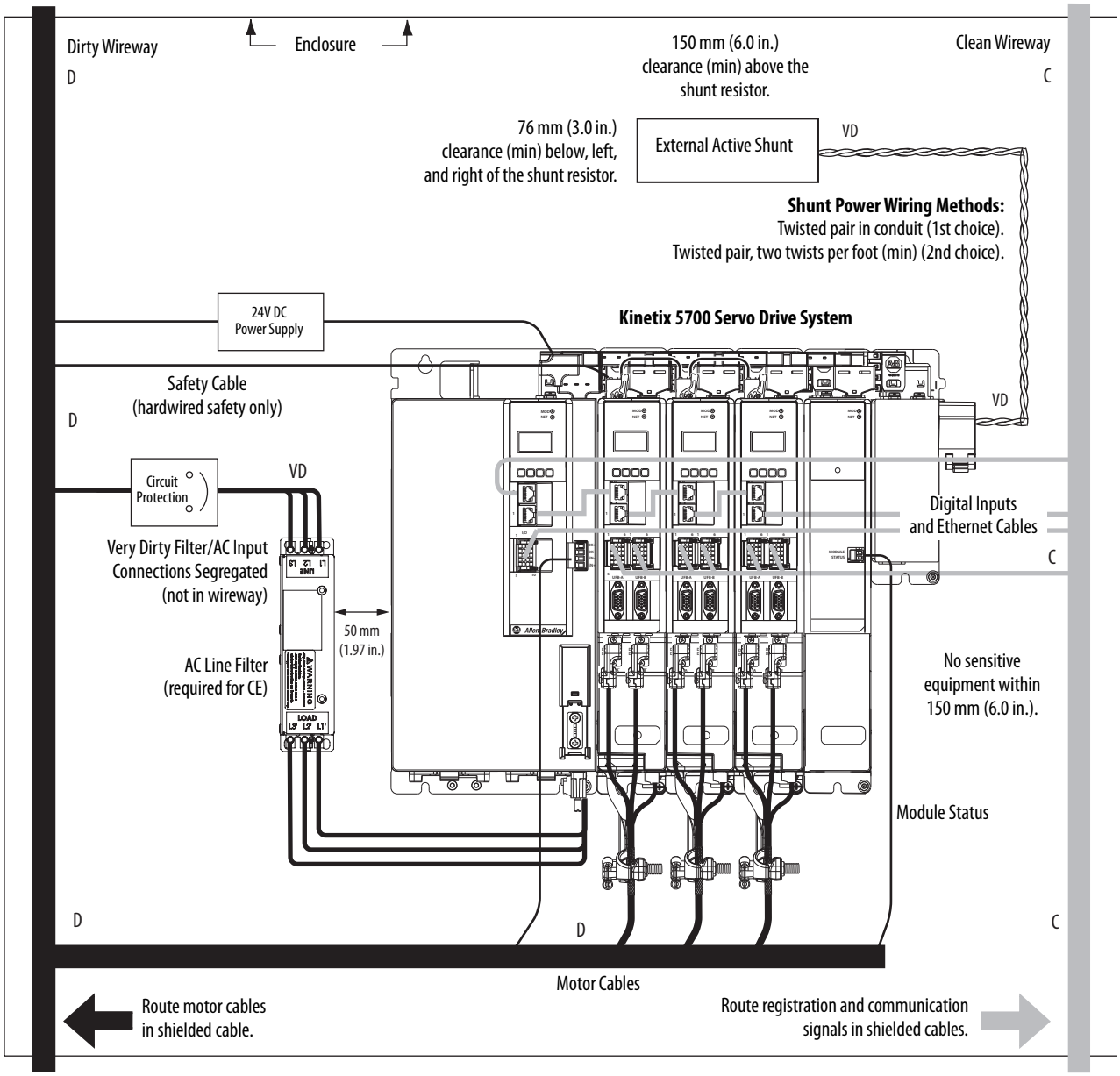

Notes:

Mount the Kinetix 5700 Drive System

This chapter provides installation procedures for mounting your Kinetix® 5700 drive system to the system panel and installing DC-bus links and 24V shared-bus connector kits to the drive modules.

Topic	Page
Determine Mounting Order	78
Mount Accessory Modules	81
Zero-stack Tab and Cutout	82
Install Shared-bus Connection Systems	82
Drill-hole Patterns	85
Mount Your Kinetix 5700 Drive Modules	88

This procedure assumes that you have prepared your panel and understand how to bond your system. For installation instructions regarding equipment and accessories not included here, refer to the instructions that came with those products.

SHOCK HAZARD: To avoid the hazard of electrical shock, perform all mounting and wiring of the Kinetix 5700 drive system before applying power. Once power is applied, connector terminals can have voltage present even when not in use.

ATTENTION: Plan the installation of your system so that you can perform all cutting, drilling, tapping, and welding with the system removed from the enclosure. Because the system is of the open type construction, be careful to keep metal debris from falling into it. Metal debris or other foreign matter can become lodged in the circuitry and result in damage to the components.

Determine Mounting Order

Mount the DC-bus power supply or regenerative bus supply on the far right or far left, whichever makes the best use of panel space. Mount inverter modules and iTRAK® power supplies in order from left to right (as shown in Figure 43) or right to left (as shown in Figure 45).

IMPORTANT We recommend that you mount inverter modules and iTRAK power supplies according to power rating (highest to lowest) from left to right (or right to left) starting with the highest power rating.

Table 27 - Kinetix 5700 Single-axis Inverter Modules

Attribute	2198-S086-ERS*x*	2198-S130-ERS*x*	2198-S160-ERS*x*	2198-S263-ERS*x*	2198-S312-ERS*x*
Continuous Power Output, nom	29.7 kW	44.9 kW	60.1 kW	90 kW	112 kW

Table 28 - Kinetix 5700 Dual-axis Inverter Modules

Attribute	2198-D006-ERS*x*	2198-D012-ERS*x*	2198-D020-ERS*x*	2198-D032-ERS*x*	2198-D057-ERS*x*
Continuous Power Output, nom	2 x 1.7 kW	2 x 3.4 kW	2 x 5.5 kW	2 x 8.9 kW	2 x 15.9 kW

Table 29 - iTRAK Power Supply

Attribute	2198T-W25K-ER
Continuous Power Output, nom	4.1 kW

The Kinetix 5700 drive system in Figure 43 could be powered by the 2198-P*xxx* DC-bus power supply or 2198-RP*xxx* regenerative bus supply. This example is powered by the DC-bus power supply (positioned on the left) with inverter modules mounted according to power rating (highest to lowest) from left to right.

Figure 43 - System Mounting Order Example (single DC-bus power supply)

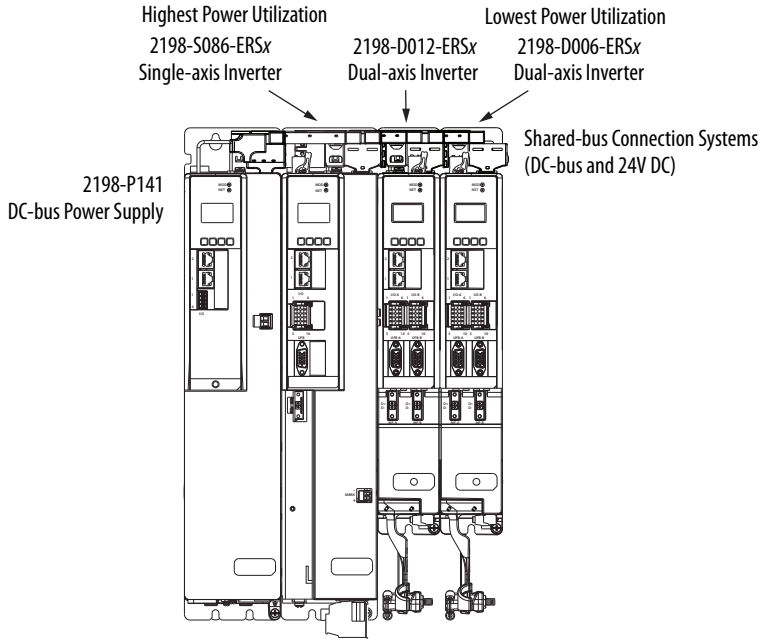

IMPORTANT The maximum number of inverter modules depends on the maximum system capacitance precharge capability of the power supplies and the total system capacitance. When there are two or three DC-bus power supplies, they must be catalog number 2198-P208.

Refer to Appendix C on page 395 for more system sizing information.

Figure 44 - System Mounting Order Example (multiple DC-bus power supplies)

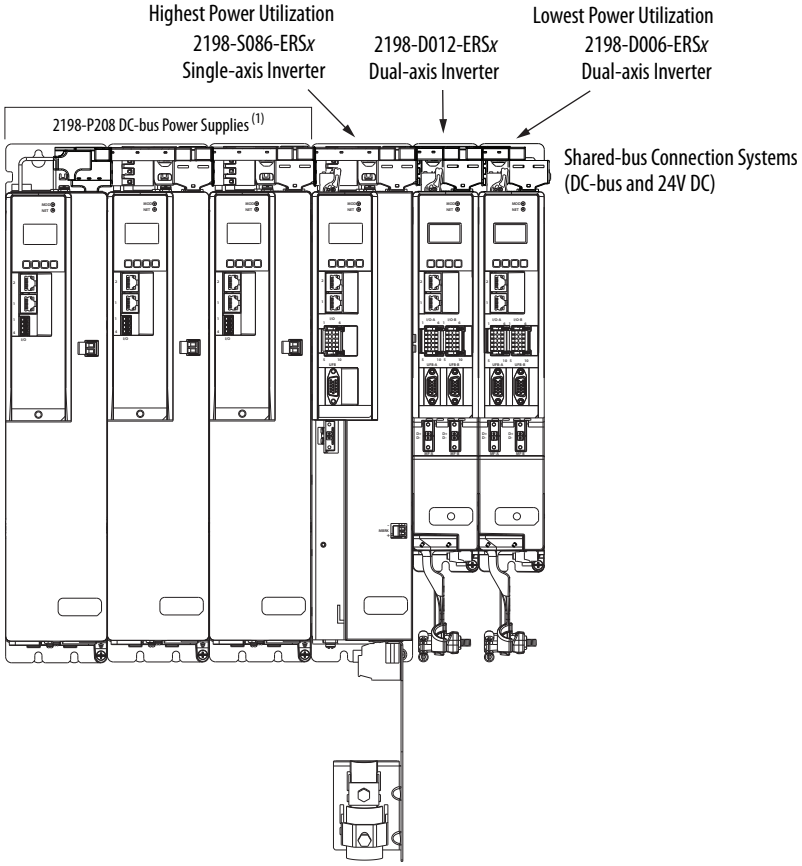

(1) The DC-bus power supplies can be left or right of the inverters.

This example is powered by the regenerative bus supply (positioned on the right) with inverter modules mounted according to power rating (highest to lowest) from right to left.

Figure 45 - System Mounting Order Example (regenerative bus supply)

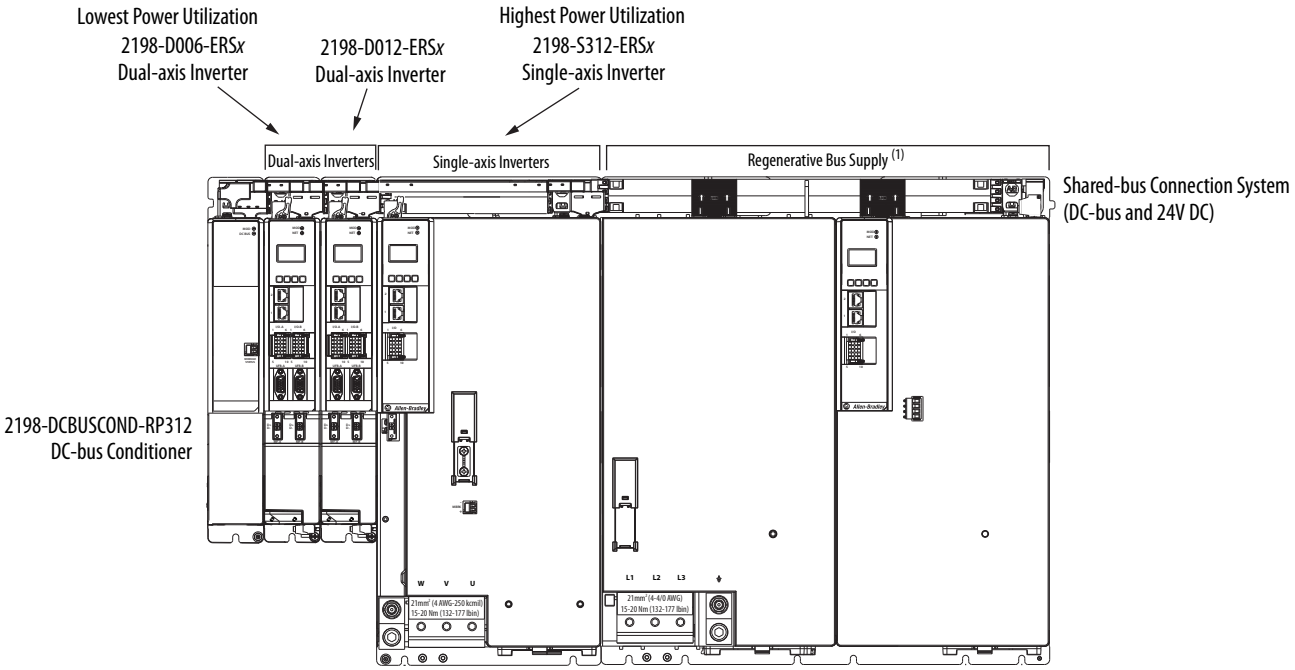

(1) The regenerative bus supply can be mounted left or right of the inverters.

IMPORTANT The maximum number of inverter modules depends on the maximum system capacitance precharge capability of the power supply and the total system capacitance.

Refer to Appendix C on page 395 for more system sizing information.

IMPORTANT The regenerative bus supply is not compatible with the iTRAK power supply.

Mount Accessory Modules

Mount the 2198-CAPMOD-2240 capacitor module on the far right or far left of any system cluster, depending on the input power configuration. A capacitor module is required in the following situations:

- Required in each cluster of a multi-cluster system
- More than one capacitor module can be used in a cluster, if needed

IMPORTANT Each additional capacitor module adds to the total system capacitance and increased energy storage.

The 2198-CAPMOD-DCBUS-IO extension module is always mounted next to a capacitor module or DC-bus conditioner module and always positioned on the outside of the system cluster (either first or last). The extension module can be paired with another accessory module and flexible bus-bars if external DC-bus current is ≥104 A up to a maximum of 208 A.

IMPORTANT When the extension module is mounted next to another accessory module, they must be connected by flexible bus-bars.

Figure 46 - Flexible Bus Bar Example

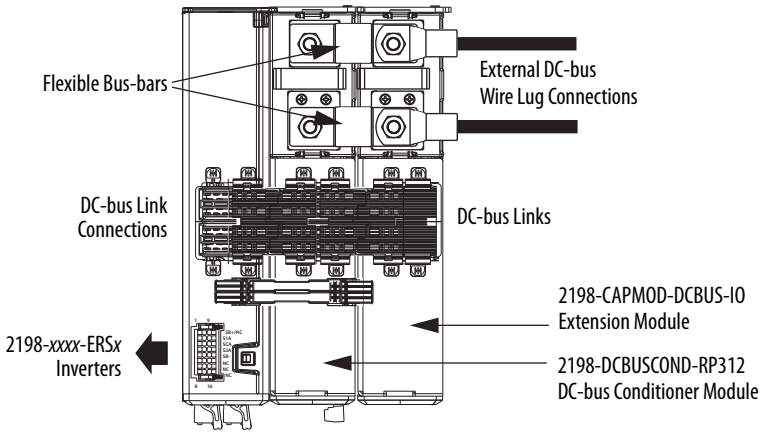

IMPORTANT In a multi-cluster system with a power supply rated ≥104 A, two accessory modules connected by flexible bus-bars must be used to create a 208 A extended cluster system. See the Accessory Module Connector Specifications table on page 176 for DC-bus wiring requirements.

Zero-stack Tab and Cutout

Engaging the zero-stack tab and cutout from one drive module to another makes efficient use of panel space, especially for high axis-count installations.

IMPORTANT Engaging the zero-stack tab and cutout from module-to-module is required for any input power configuration. This is done to make sure that the DC-bus connectors are spaced properly to accept the shared-bus connection system.

Figure 47 - Zero-stack Tab and Cutout Example

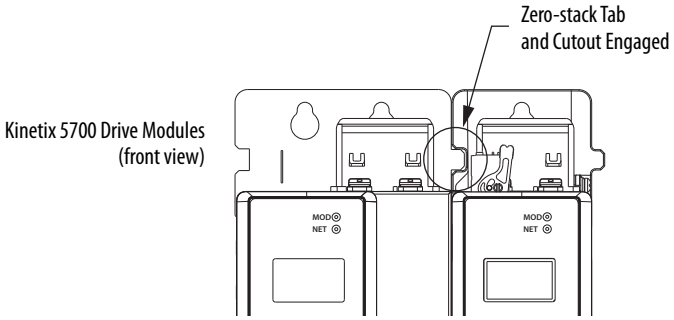

For Kinetix 5700 system sizing examples, refer to Appendix C on page 395.

Install Shared-bus Connection Systems

The shared-bus connection system is used to extend the DC-bus power and 24V control power from one drive module to another.

IMPORTANT The zero-stack tab and cutout must be engaged between adjacent drive modules for the shared-bus connection system to fit properly.

DC-bus Connection System

The DC-bus connection system is required and comprised of these two components:

- DC-bus links that are inserted between drive modules to extend the DC-bus from one drive module to another.

  IMPORTANT DC-bus links are included with inverter and accessory modules, so when two or three 2198-P208 DC-bus power supplies are connected in parallel, order extra 2198-BARCON-85DC200 DC-bus links.

- DC-bus end-caps that are inserted into the first and last drive modules to cover the exposed DC-bus connector on both ends of the bus.

Figure 48 - DC-bus Connector Example

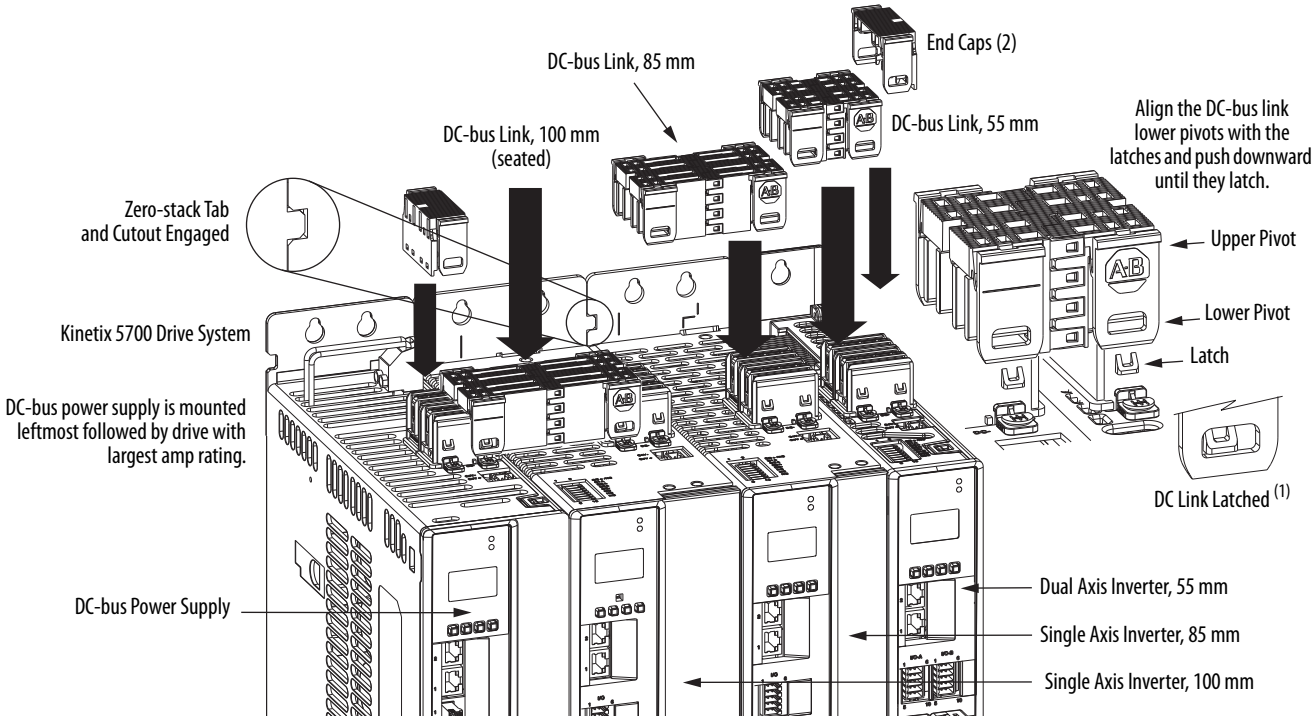

(1) DC-bus links latch on both sides when inserted into the DC-bus connectors. To remove the DC-bus link, depress both sets of upper pivots to unlatch the lower pivots and hold the DC-bus link firmly while pulling upward.

24V Input Power Connection System

The optional 24V input power connection system always feeds 24V DC from left to right and is comprised of three components:

- The 24V input wiring connector that plugs into the DC-bus power supply or first module supplied by the 24V external power receives 24V DC input wiring.
- 24V DC T-connectors that plug into the drive modules downstream from the power supply or first module supplied by the 24V external power where the 24V control power is shared.
- Bus bars that connect between drive modules to extend the 24V control power from one drive module to another.

Multiple 24V shared-bus input wiring connectors can be used in a high axis-count system. If the 40 A shared-bus current rating is exceeded, you can add another connector at any point in the cluster. 2198-S263-ERS*x* and 2198-S312-ERS*x* drives and 2198-RP263 and 2198-RP312 bus supplies use the 2198T-W25K-P-IN input wiring connector. All other modules use the 2198-TCON-24VDCIN36 input wiring connector. Both wiring connectors accept up to 10 mm^2 (6 AWG) wire. The CP connectors that are included with each module accept up to 10 mm^2 (12 AWG) or 6 mm^2 (10 AWG), so the shared-bus input wiring connectors can provide the means to use larger gauge conductors for reduced voltage drop on long wire runs.

Figure 49 - 24V Connector Example

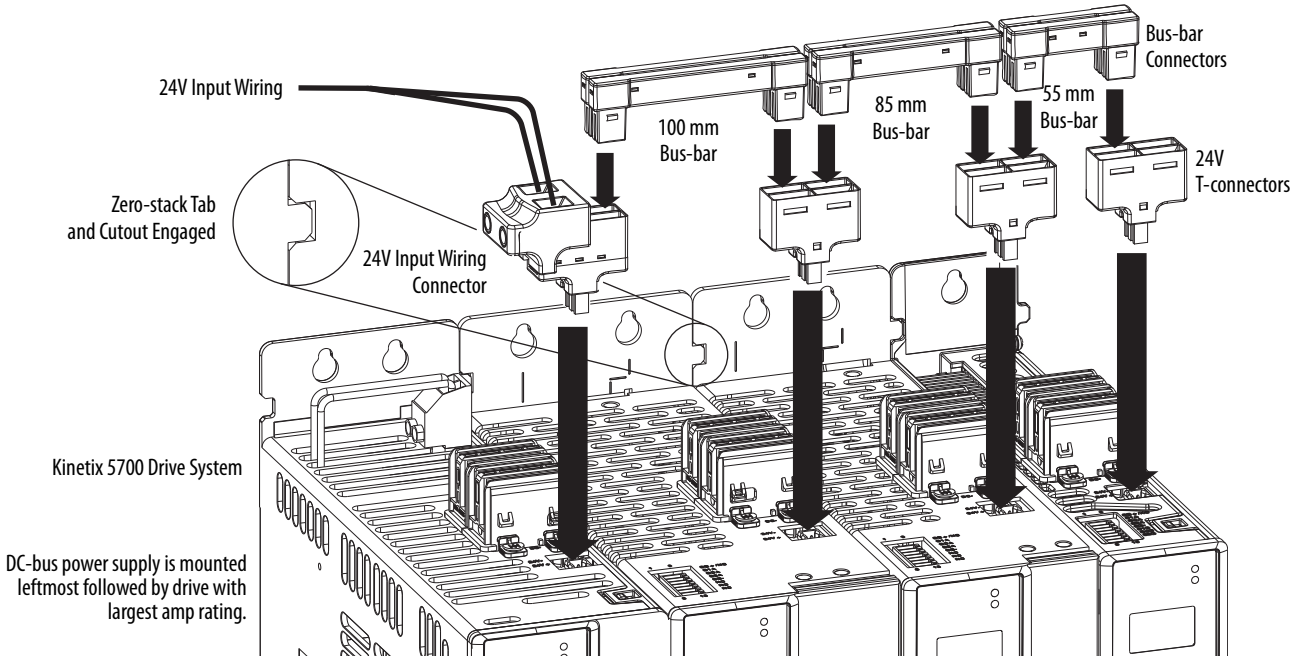

The three 24V input power components must assemble from left to right across the drive system.

1. Attach wiring to 24V input wiring connector.
2. Insert input wiring connector and T-connectors into the appropriate drive module connectors.
3. Insert bus-bars to connect between wiring connector and T-connectors.

IMPORTANT The input wiring connector can be inserted into any drive module (mid-stream in the drive system) to begin a new 24V control bus when the maximum current value is reached. However, the input connector must always extend the 24V DC-bus from left to right.

IMPORTANT Mount the 24V power supply as close to the drive system as possible to minimize voltage drop on the 24V input power wiring.

The following configurations require more than one 24V input wiring connector:

- The 40 A maximum current rating is exceeded
- The 2198-RP*xxx* regenerative bus supply is positioned between the inverters or accessory modules in any single cluster
- The 2198-RP*xxx* regenerative bus supply is positioned to the right of any other module

In this example, one 24V connection system spans (left to right) across the dual-axis inverters only. In the other 24V input connection system, the 2198-S312-P-T control power T-connector and bus-bar connects the regenerative bus supply and single-axis inverter only.

TIP 24V control power bus-bars that bridge across 2198-RP*xxx* regenerative bus supplies are not available.

Figure 50 - Multiple 24V Input Wiring Connector Example

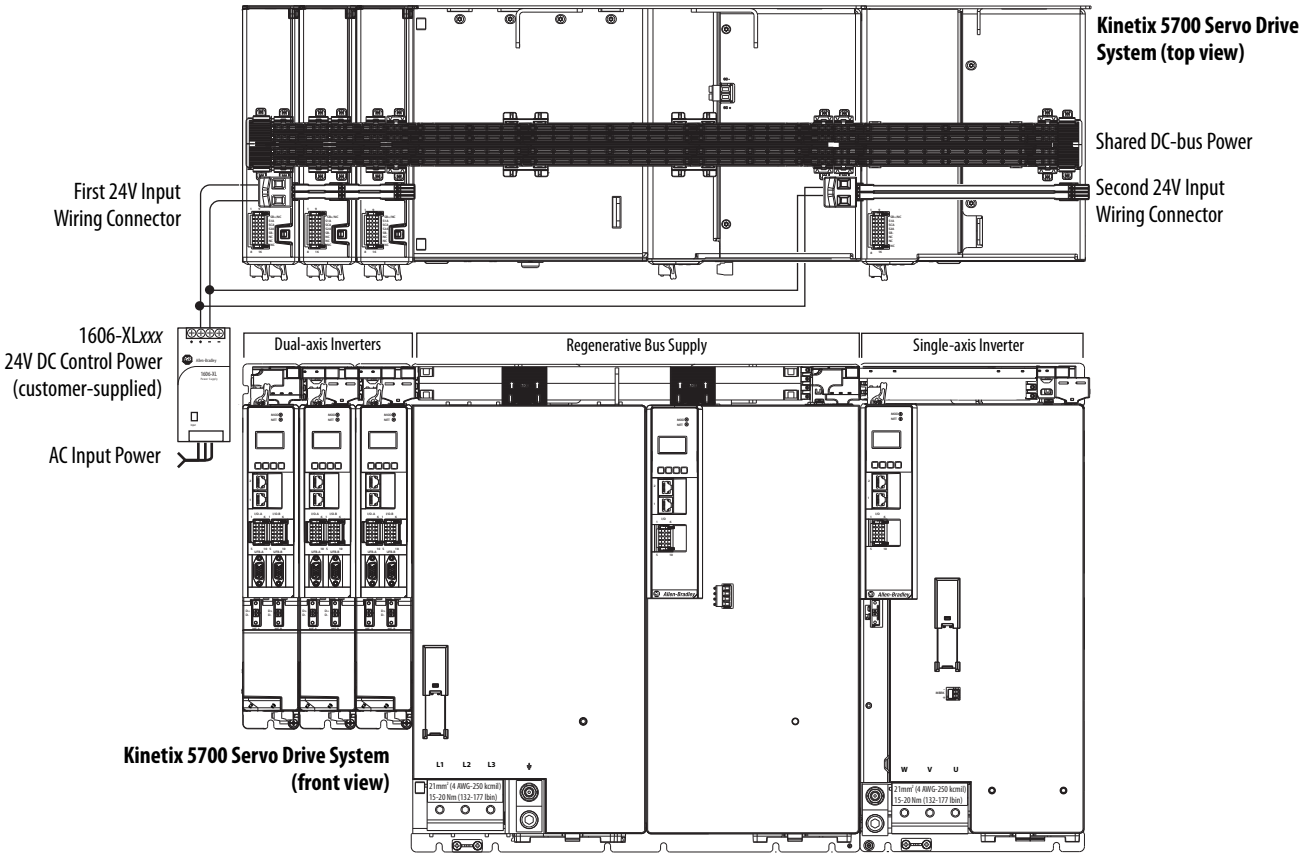

Drill-hole Patterns

This section provides drill-hole patterns for Kinetix 5700 drive modules that are mounted in zero-stack (shared-bus) configurations. Properly spaced drill-holes are essential for engaging the zero-stack tab and cutout from module-to-module so that the DC-bus connectors are spaced properly to accept the DC-bus links.

The DC-bus power supply and regenerative bus supply can be mounted on the far right, far left, or anywhere in between. However, the far left position is preferred to accommodate the 24V shared bus.

Also available to assist you in mounting Kinetix 5700 drive modules is the 2198-K5700-MOUNTKIT system mounting toolkit.

Drill-hole Pattern Calculations

Use Figure 51 to calculate the left-to-right hole pattern for Kinetix 5700 drive system configurations that include the 2198-P*xxx* DC-bus power supply.

1. The first hole location is zero.
2. The second hole location is module width minus 55 mm.
3. The next hole location is 55 mm.
4. Repeat step 2 and step 3 for the remaining holes.

Figure 51 - DC-bus Power Supply Mounting Hole Patterns

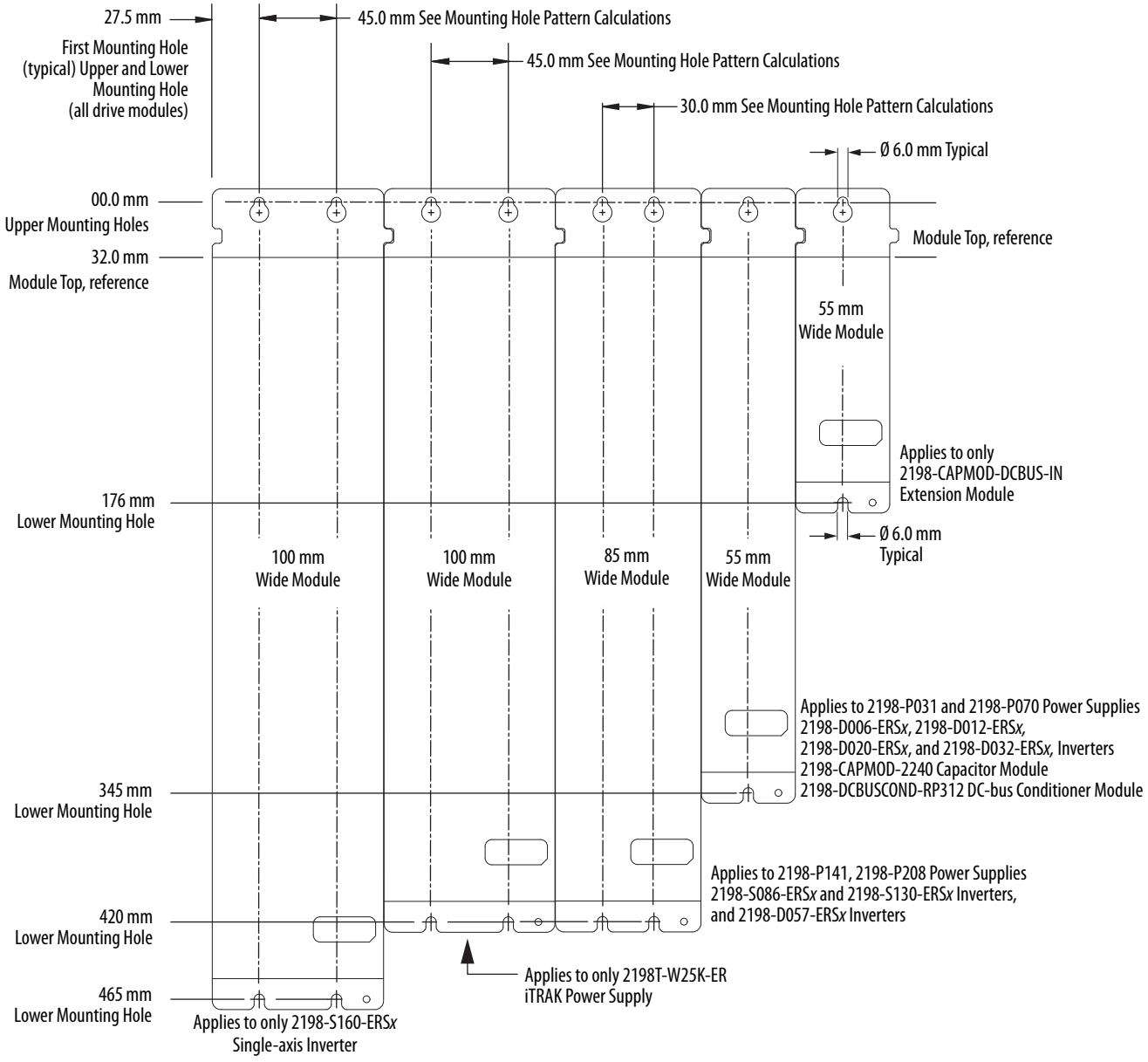

IMPORTANT Hole spacing is measured in millimeters and not converted to inches to avoid errors due to rounding.

Use Figure 52 to calculate the left-to-right hole pattern for Kinetix 5700 drive system configurations that include the 2198-RP*xxx* regenerative bus supply.

Mounting holes for the Kinetix 5700 regenerative bus supply modules are based on 55 mm spacing, however, only the holes specified for each module are required.

Figure 52 - Regenerative Bus Supply Mounting Hole Patterns

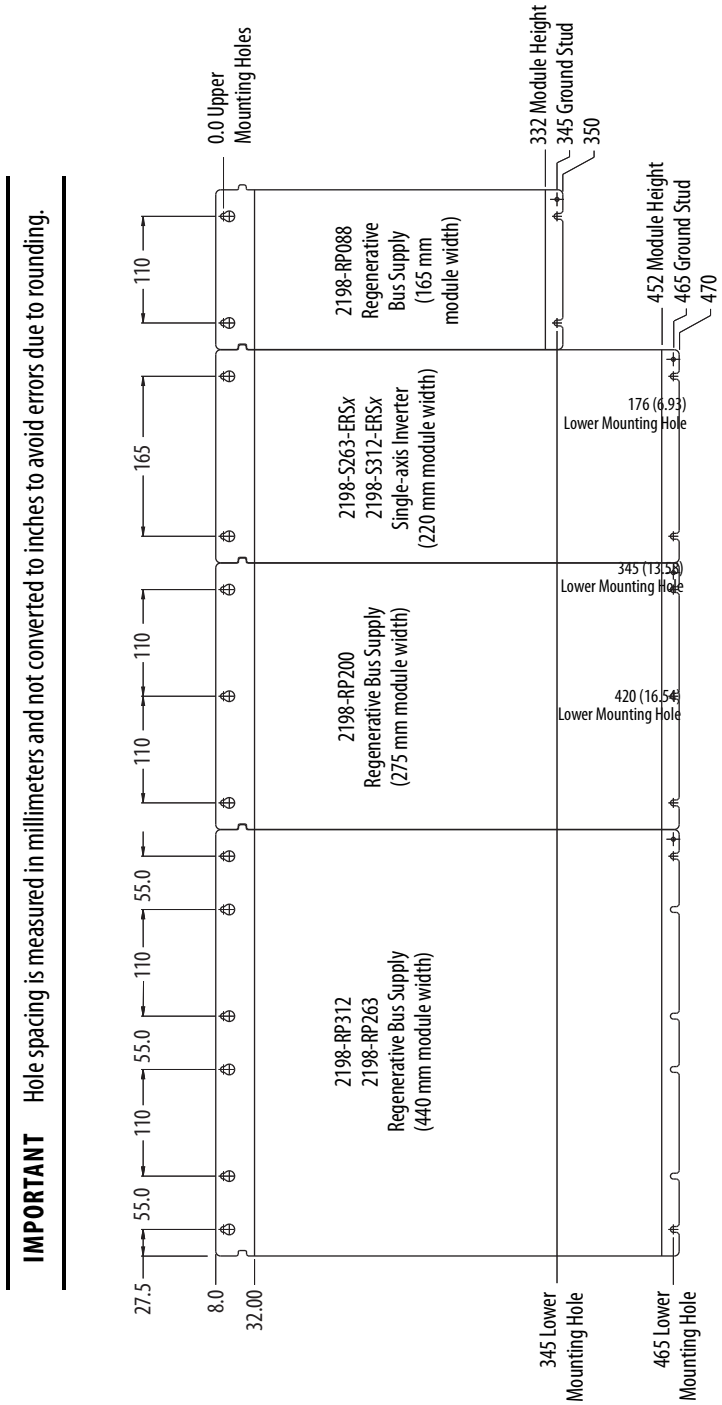

Drill-hole Patterns by Using the System Mounting Toolkit

The mounting bar must be mounted horizontally on the system panel. The drill-hole guide inserts behind the mounting bar and slides left and right. Holes and slots in the drill-hole guide let you establish the location of each Kinetix 5700 drive module.

Figure 53 - Mounting Bar

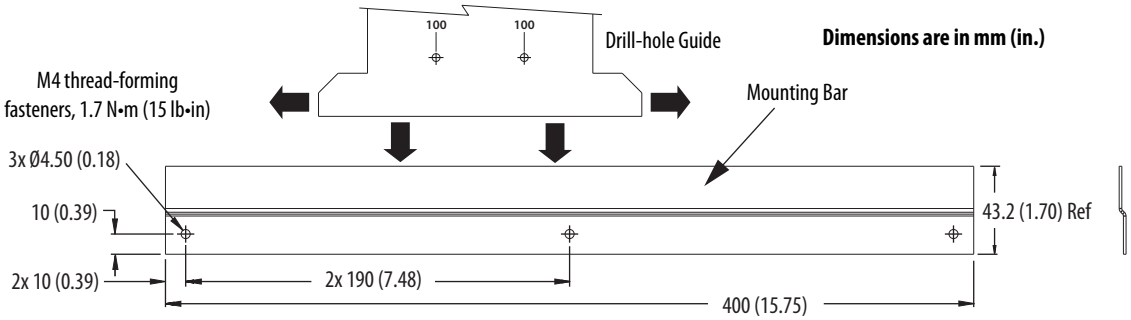

For step-by-step instructions on how to use the system mounting toolkit, see the Kinetix 5700 System Mounting Toolkit Installation Instructions, publication 2198-IN012.

Mount Your Kinetix 5700 Drive Modules

This procedure assumes that you have prepared your panel and understand how to bond your system. For installation instructions regarding other equipment and accessories, refer to the instructions that came with those products.

A hoist, straps, and J-hooks with a lockable clasp capable of supporting the maximum module weight are recommended for catalog numbers 2198-RP200, 2198-RP263, and 2198-RP312. For lifting instructions, see the Kinetix 5700 Regenerative Bus Supply Installation Instructions, publication 2198-IN014.

Follow these steps to mount your Kinetix 5700 drive modules to the panel.

1. Lay out the hole pattern for each drive module in the enclosure.

   See Establish Noise Zones on page 68 for panel layout recommendations.

IMPORTANT	To improve the bond between the drive modules and subpanel, construct your subpanel out of zinc plated (paint-free) steel.

2. Drill holes in the panel for mounting your drive system.

   Refer to Drill-hole Patterns beginning on page 85.

3. Loosely attach the mounting hardware to the panel.

   The recommended mounting hardware is M5 (#10-32) steel bolts. Observe bonding techniques as described in HF Bond for Modules on page 65.

4. Attach the DC-bus supply (or supplies) or the regenerative bus supply to the cabinet panel.

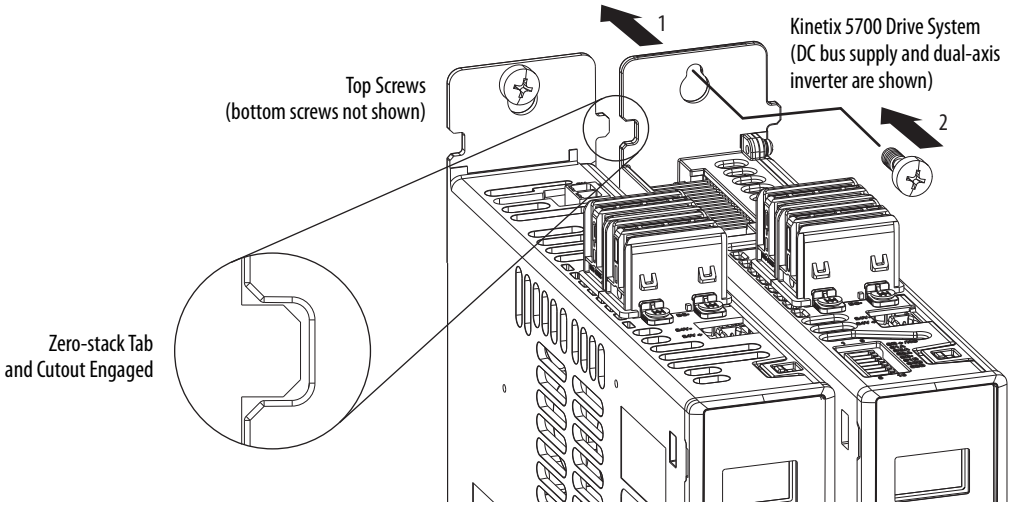

5. Attach additional drive modules to the right or left of the previous module by using the same method, but also making sure that the zero-stack tabs and cutouts are engaged.

   Zero-stack mounting is required for all configurations. See the Zero-stack Tab and Cutout Example on page 82.

6. Tighten all mounting fasteners.

   Apply 4.0 N•m (35.4 lb•in) maximum torque to each fastener.

Notes:

Connector Data and Feature Descriptions

This chapter illustrates connectors and indicators for the Kinetix® 5700 drive system components, including the DC-bus power supply, regenerative bus supply, single-axis inverter, dual-axis inverter, and accessory modules. Also included in this chapter are connector pinouts and descriptions for Kinetix 5700 system components.

Topic	Page
Kinetix 5700 Connector Data	92
Understand Control Signal Specifications	106
Feedback Specifications	112
Functional Safety Features	120

Kinetix 5700 Connector Data

Use these illustrations to identify the connectors and indicators for the Kinetix 5700 drive modules.

Figure 54 - DC-bus Power Supply Features and Indicators

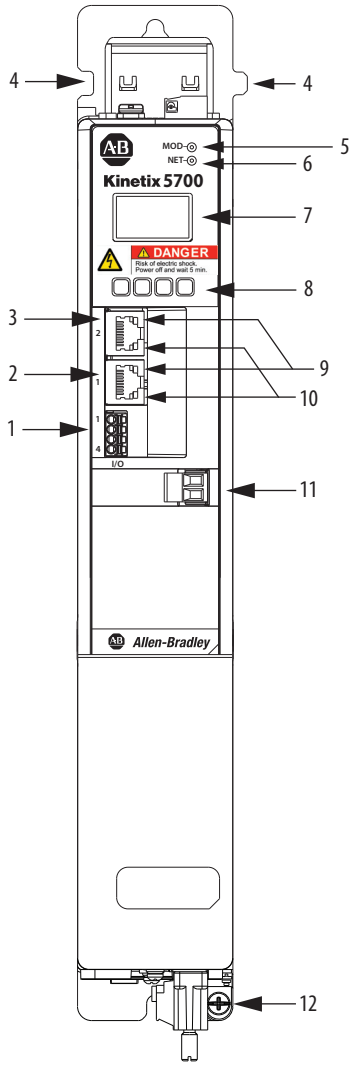

DC-bus Power Supply, Front View
(2198-P031 module is shown)

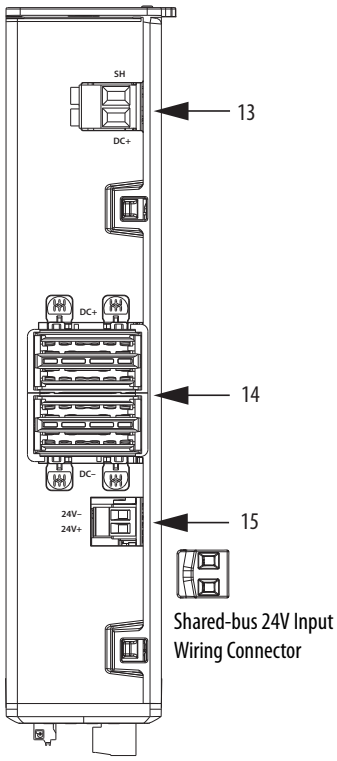

DC-bus Power Supply, Top View
(2198-P031 module is shown)

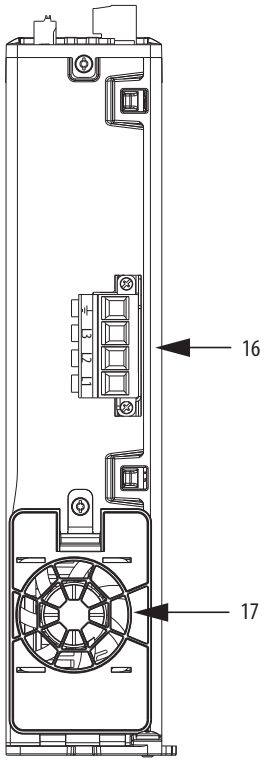

DC-bus Power Supply, Bottom View
(2198-P031 module is shown)

Item	Description
1	Digital inputs (IOD) connector
2	Ethernet (PORT1) RJ45 connector
3	Ethernet (PORT2) RJ45 connector
4	Zero-stack mounting tab/cutout
5	Module status indicator
6	Network status indicator

Item	Description
7	LCD display
8	Navigation pushbuttons
9	Link speed status indicators
10	Link/Activity status indicators
11	Contactor-enable (CED) connector
12	Ground terminal

Item	Description
13	Shunt resistor (RC) connector
14	DC bus (DC) connector
15	24V control input power (CP) connector
16	AC Input power (IPD) connector
17	Cooling fan

Figure 55 - Regenerative Bus Supply Features and Indicators

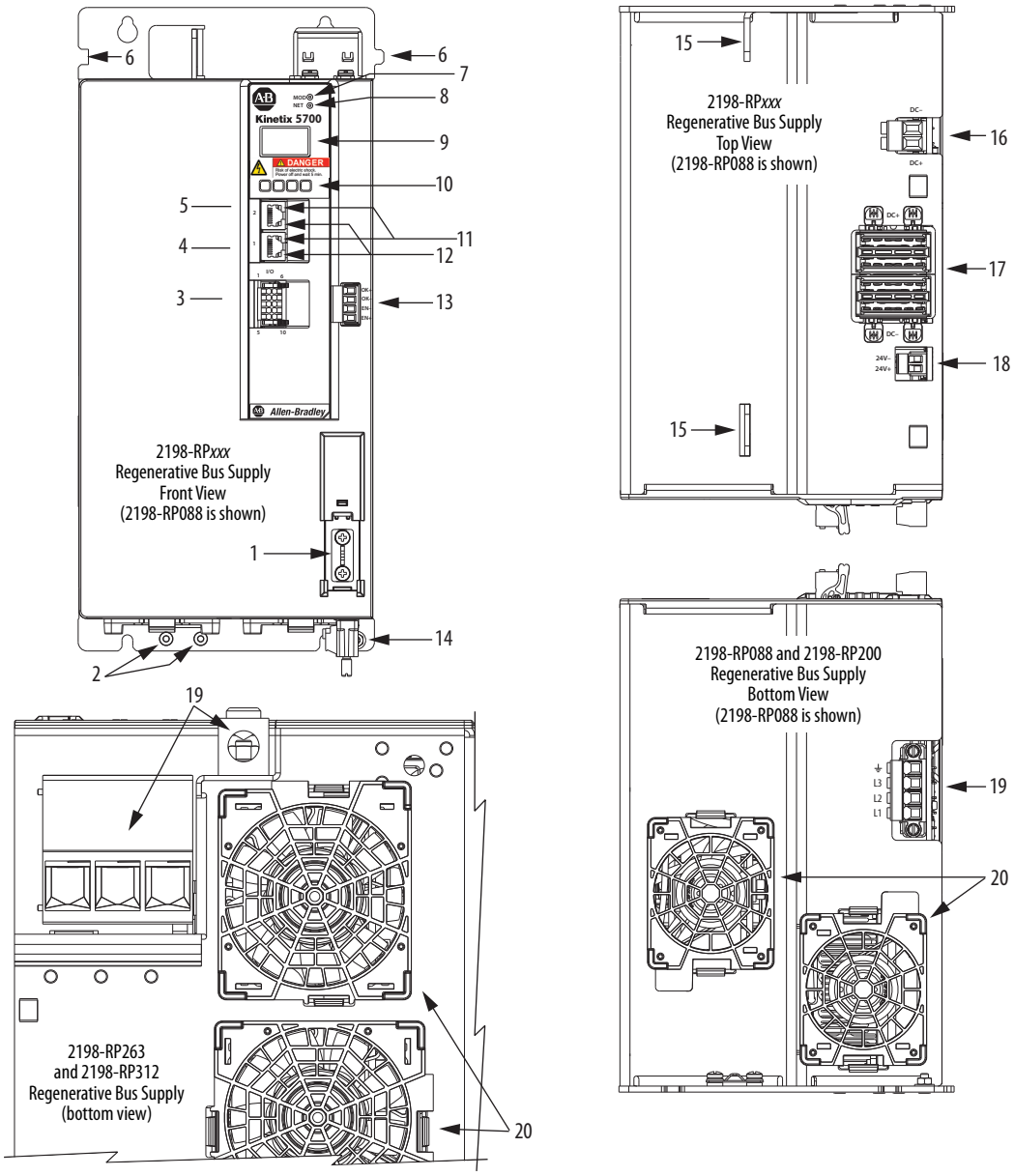

Item	Description
1	Ground jumper in operation
2	Ground jumper in storage
3	Digital inputs (IOD) connector
4	Ethernet (PORT1) RJ45 connector
5	Ethernet (PORT2) RJ45 connector
6	Zero-stack mounting tab/cutout
7	Module status indicator

Item	Description
8	Network status indicator
9	LCD display
10	Navigation push buttons
11	Link speed status indicators
12	Link/Activity status indicators
13	Contactor enable (CED) connector
14	Ground lug (partially obscured behind input plug)

Item	Description
15	Lifting points
16	Active shunt (RC) connector
17	DC bus (DC) connector
18	24V control input power (CP) connector
19	AC Input power (IPD) connector (1)
20	Cooling fans

(1) Connector plug orientation applies to 2198-RP088 and 2198-RP200 modules (2198-RP200 connector size is larger). See adjacent figure for 2198-RP263 and 2198-RP312 connector plug size and orientation.

Figure 56 - Dual-axis Inverter Features and Indicators

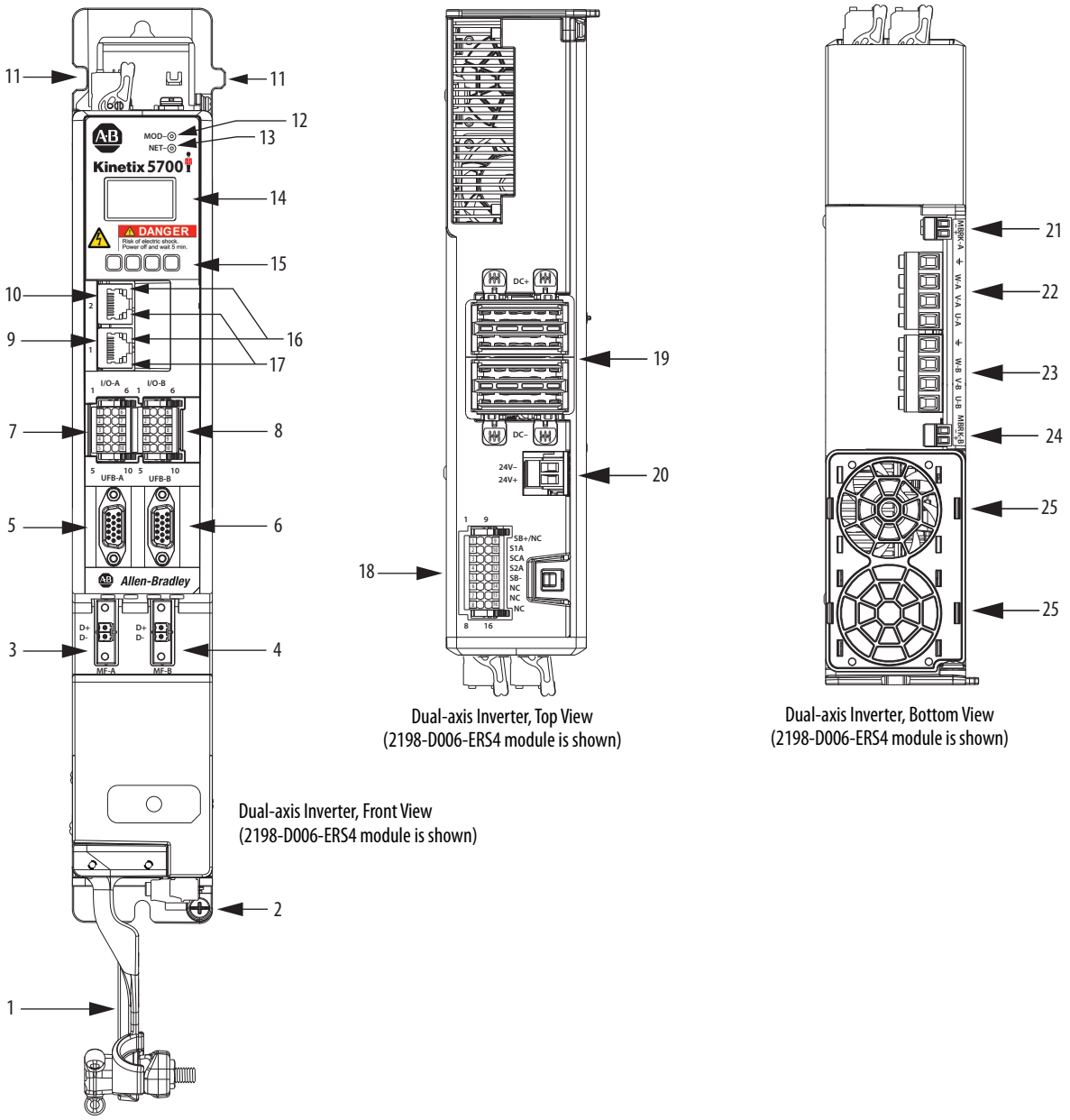

Dual-axis Inverter, Top View
(2198-D006-ERS4 module is shown)

Dual-axis Inverter, Bottom View
(2198-D006-ERS4 module is shown)

Dual-axis Inverter, Front View
(2198-D006-ERS4 module is shown)

Item	Description
1	Motor cable clamp with spacers
2	Ground terminal
3	Motor feedback (MF) connector - A
4	Motor feedback (MF) connector - B
5	Universal feedback (UFB) connector - A
6	Universal feedback (UFB) connector - B
7	Digital inputs (IOD) connector - A
8	Digital inputs (IOD) connector - B
9	Ethernet (PORT1) RJ45 connector

Item	Description
10	Ethernet (PORT2) RJ45 connector
11	Zero-stack mounting tab/cutout
12	Module status indicator
13	Network status indicator
14	LCD display
15	Navigation pushbuttons
16	Link speed status indicators
17	Link/Activity status indicators
18	Safe torque-off (STO) connector

Item	Description
19	DC bus (DC) connector
20	24V control input power (CP) connector
21	Motor brake (BC) connector - A
22	Motor power (MP) connector - A
23	Motor power (MP) connector - B
24	Motor brake (BC) connector - B
25	Cooling fan

Figure 57 - Single-axis Inverter Features (2198-S086-ERS*x*, 2198-S130-ERS*x*, 2198-S160-ERS*x*)

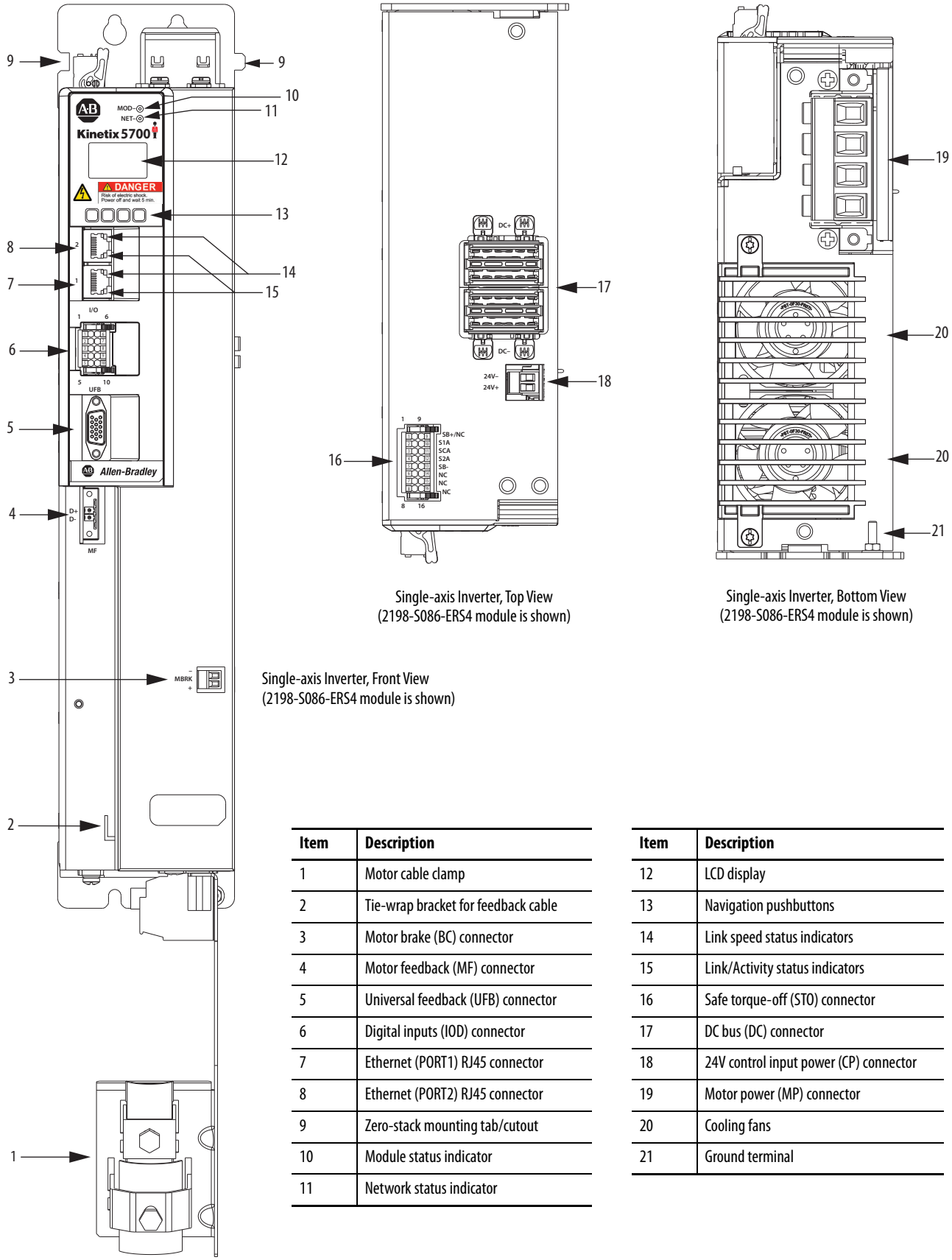

Single-axis Inverter, Top View
(2198-S086-ERS4 module is shown)

Single-axis Inverter, Bottom View
(2198-S086-ERS4 module is shown)

Single-axis Inverter, Front View
(2198-S086-ERS4 module is shown)

Item	Description
1	Motor cable clamp
2	Tie-wrap bracket for feedback cable
3	Motor brake (BC) connector
4	Motor feedback (MF) connector
5	Universal feedback (UFB) connector
6	Digital inputs (IOD) connector
7	Ethernet (PORT1) RJ45 connector
8	Ethernet (PORT2) RJ45 connector
9	Zero-stack mounting tab/cutout
10	Module status indicator
11	Network status indicator

Item	Description
12	LCD display
13	Navigation pushbuttons
14	Link speed status indicators
15	Link/Activity status indicators
16	Safe torque-off (STO) connector
17	DC bus (DC) connector
18	24V control input power (CP) connector
19	Motor power (MP) connector
20	Cooling fans
21	Ground terminal

Figure 58 - Single-axis Inverter Features (2198-S263-ERS*x*, 2198-S312-ERS*x*)

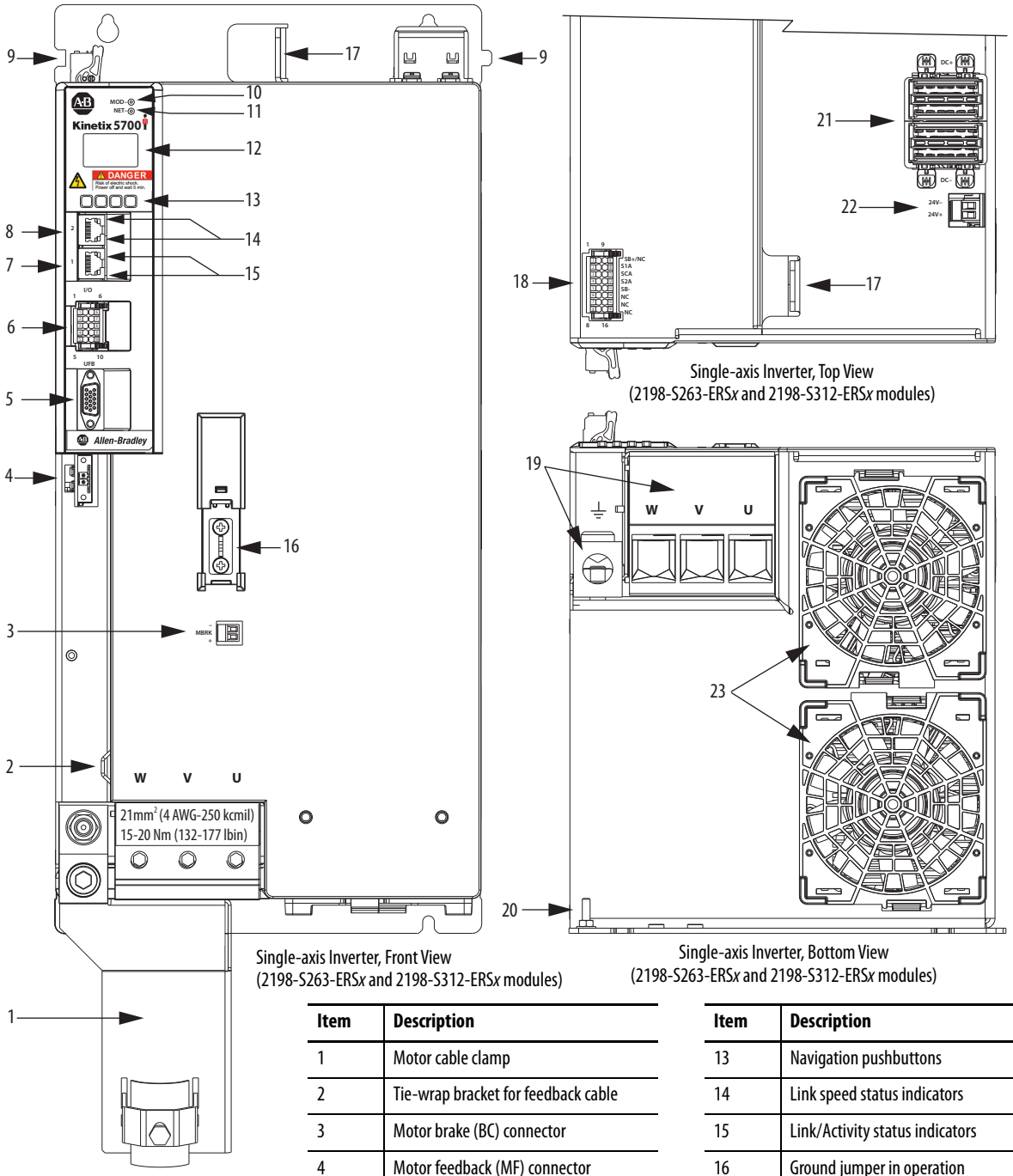

Item	Description
1	Motor cable clamp
2	Tie-wrap bracket for feedback cable
3	Motor brake (BC) connector
4	Motor feedback (MF) connector
5	Universal feedback (UFB) connector
6	Digital inputs (IOD) connector
7	Ethernet (PORT1) RJ45 connector
8	Ethernet (PORT2) RJ45 connector
9	Zero-stack mounting tab/cutout
10	Module status indicator
11	Network status indicator
12	LCD display

Item	Description
13	Navigation pushbuttons
14	Link speed status indicators
15	Link/Activity status indicators
16	Ground jumper in operation
17	Safe torque-off (STO) connector
18	Lifting points
19	Motor power (MP) connector
20	Ground terminal
21	DC bus (DC) connector
22	24V control input power (CP) connector
23	Cooling fans (replacement kits available)

Figure 59 - iTRAK Power Supply Features and Indicators

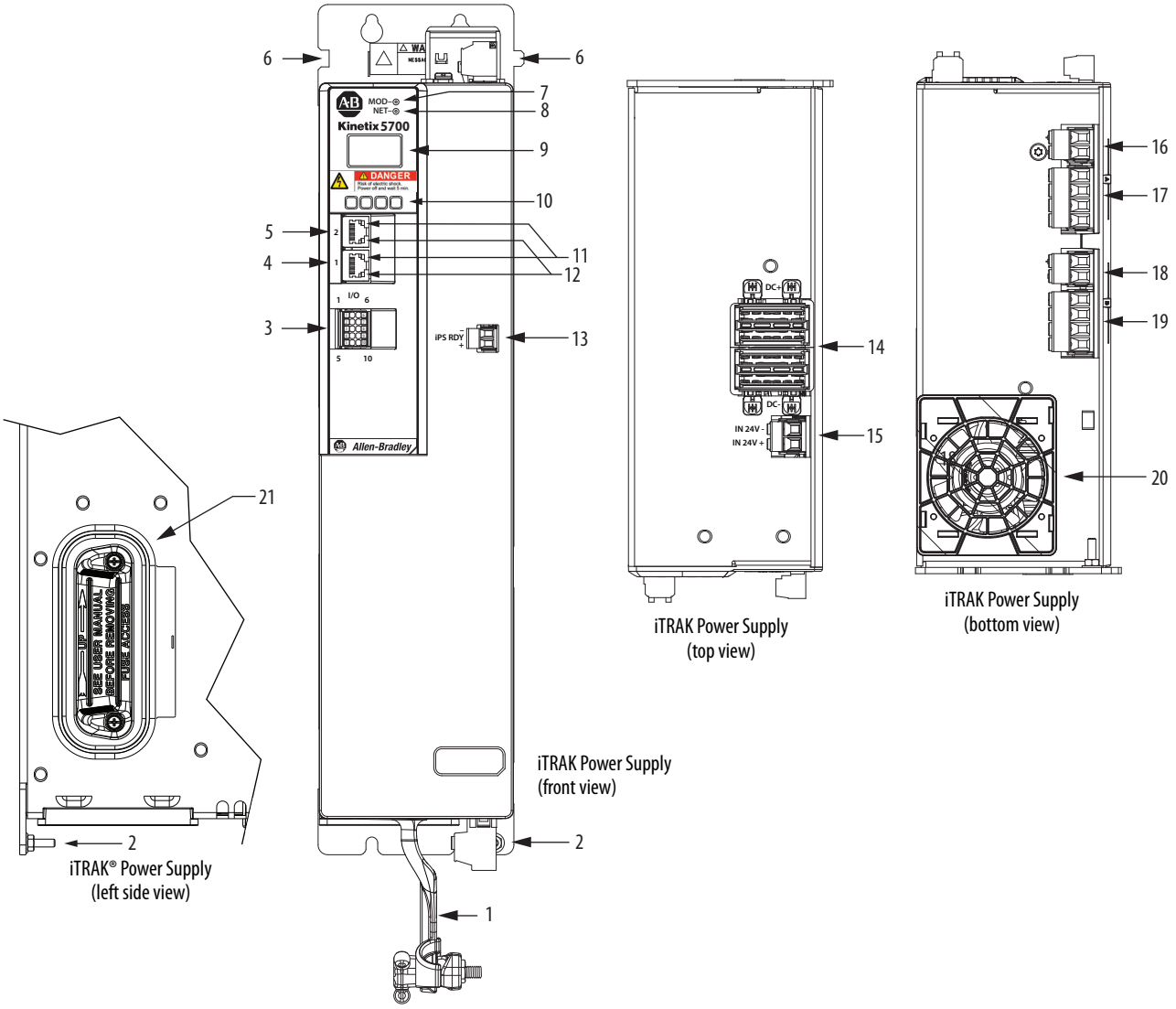

Item	Description
1	Power bus cable clamp
2	Ground lug (partially obscured behind output plugs)
3	Digital inputs (IOD) connector
4	Ethernet (PORT1) RJ45 connector
5	Ethernet (PORT2) RJ45 connector
6	Zero-stack mounting tab/cutout
7	Module status indicator

Item	Description
8	Network status indicator
9	LCD display
10	Navigation push buttons
11	Link speed status indicators
12	Link/Activity status indicators
13	iTRAK power-supply ready (IR) connector
14	DC bus input (DC) connector

Item	Description
15	24V control input power (CP) connector
16	24V control output power (ICP) connector -A
17	DC bus output (IDC) connector - A
18	24V control output power (ICP) connector - B
19	DC bus output (IDC) connector - B
20	Cooling fan
21	Power supply internal fuse

IMPORTANT For IOD, IR, IDC, and ICP connector pinouts, and internal fuse information see iTRAK System with TriMax Bearings User Manual, publication 2198T-UM002, or iTRAK 5730 System User Manual, publication 2198T-UM003.

Figure 60 - Capacitor Module and DC-bus Conditioner Module Features and Indicators

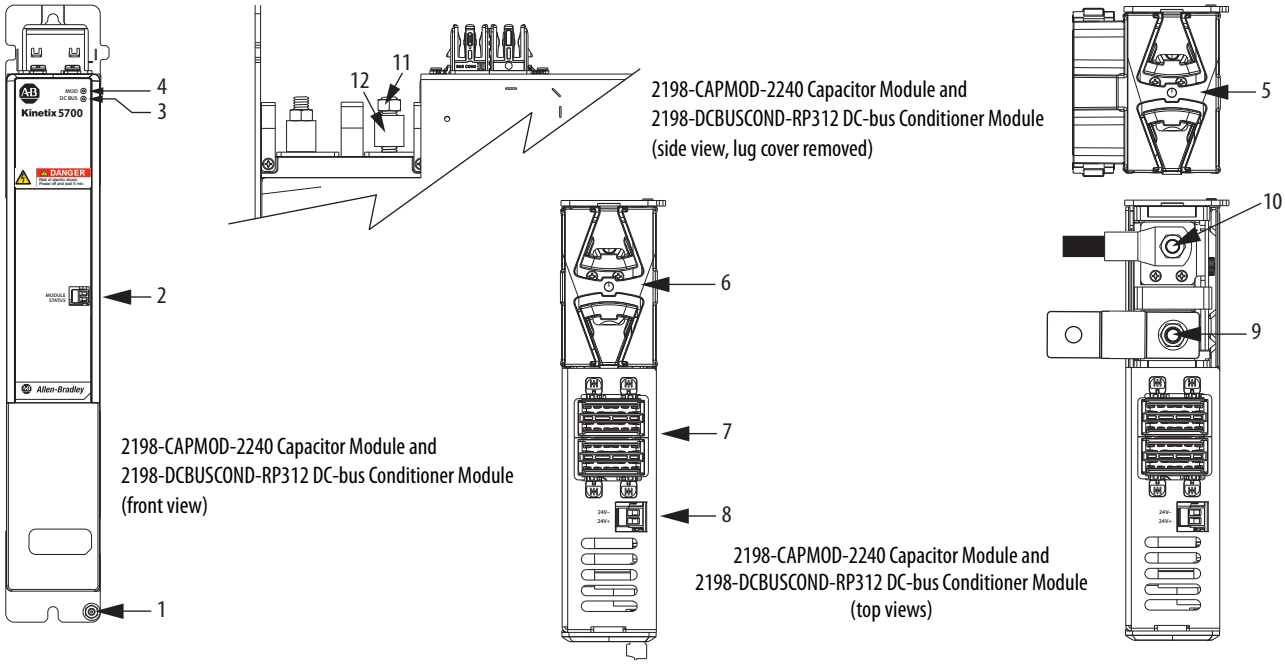

Item	Description
1	Ground stud
2	Module status (MS) connector
3	DC-bus status indicator
4	Module status indicator

Item	Description
5	Stud/lug cover with wires (1)
6	Stud cover without wires
7	DC-bus (DC) connector
8	24V control input power (CP) connector

Item	Description
9	DC– M8 stud (external DC-bus), shown with flexible bus-bar (2)
10	DC+ M8 stud (external DC-bus), shown with wire lug
11	M8 hex nut
12	Lug spacer

(1) This example shows the lug cover oriented for wires exiting to the left (module is on the far left of the drive configuration). Rotate lug cover 180° when wires exit to the right (module is on the far right of the drive configuration).

(2) Flexible bus-bars are included with only the 2198-CAPMOD-DCBUS-IO extension module. So, if you have two capacitor modules, two DC-bus conditioner modules, or a capacitor module and DC-bus conditioner module mounted side by side, you must order the 2198-KITCON-CAPMOD2240 or 2198-KITCON-DCBUSCOND connector set separately.

Figure 61 - Extension Module Features and Indicators

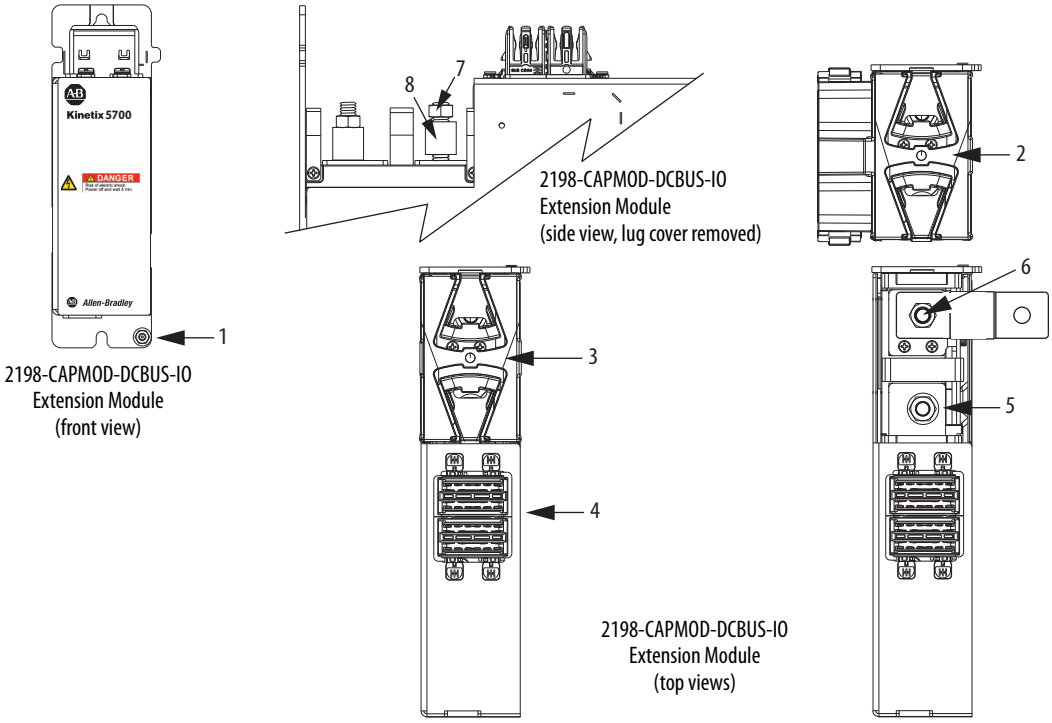

Item	Description
1	Ground lug
2	Stud/lug cover with wires (1)
3	Stud cover without wires
4	DC-bus (DC) connector

Item	Description
5	DC– M8 stud (external DC-bus)
6	DC+ M8 stud (external DC-bus), shown with flexible bus-bar (2)
7	M8 hex nut
8	Lug spacer

(1) This example shows the lug cover oriented for wires exiting to the left (module is on the far left of drive configuration). Rotate lug cover 180° when wires exit to the right (module is on the far right of drive configuration).

(2) Flexible bus-bars are included with only the 2198-CAPMOD-DCBUS-IO extension module.

Safe Torque-off Connector Pinout

The hardwired safe torque-off (STO) connector pinouts apply to single-axis and dual-axis inverters. For feature descriptions and wiring information, refer to Chapter 9 beginning on page 316.

Input Power Connector Pinouts

Input power connectors include the AC input power (IPD) connector, contactor enable (CED) connector, and the 24V input power (CP) connector.

Table 30 - AC Input Power Connector

IPD Pin	Description	Signal	Module
⏚	Chassis ground	⏚	• DC-bus power supply • Regenerative bus supply
L3	Three-phase input power	L3	
L2		L2	
L1		L1	

Table 31 - 24V Input Power Connector

CP Pin	Description	Signal	Module
1	24V power supply, customer supplied	24V+	• DC-bus power supply • Regenerative bus supply • Inverters • Capacitor module • DC-bus conditioner module • iTRAK power supply
2	24V common	24V–	

Table 32 - Contactor Enable Connector

CED Pin	Description	Signal	Module
OK+	Relay-driven contact that provides a 24V signal to non-Kinetix 5700 inverters indicating that they can draw power from the regenerative power supply. This signal is intended for use with Kinetix 6000, Kinetix 7000, or PowerFlex® drive migration.	CONV OK+	Regenerative bus supply
OK–		CONV OK–	
EN–	Relay-driven contact that is used in the control string for a three-phase power contactor.	CONT EN–	• DC-bus power supply • Regenerative bus supply
EN+		CONT EN+	

DC Bus and Shunt Resistor Connector Pinouts

The 2198-P*xxx* DC-bus power supply RC connector wires to an external passive shunt when the internal shunt capacity is exceeded. The 2198-RP*xxx* regenerative bus supply has no internal shunt and the RC connector wires to an external active shunt.

Table 33 - DC Bus Power Connector

DC Pin	Description	Signal	Module
Bus bar	DC bus connections	DC–	• DC-bus power supply • Regenerative bus supply • Inverters • Accessory modules • iTRAK power supply
		DC+	

Table 34 - Shunt Connector

RC Pin	Description	Signal	Module
1	Passive shunt connections	SH	DC-bus power supply
2		DC+	
1	Active shunt connections	DC–	Regenerative bus supply
2		DC+	

Digital Inputs Connector Pinouts

The DC-bus power supply has two configurable digital inputs and four configurable functions to choose from in the Logix Designer application.

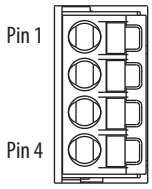

Pin Orientation for 4-pin Digital Inputs (IOD) Connector

Table 35 - DC-bus Power Supply Digital Input Pinouts

IOD Pin	Description	Signal	Module
1	24V current sinking fast input #1	IN1	DC-bus power supply
2	I/O common for customer-supplied 24V supply	COM	
3	24V current sinking fast input #2	IN2	
4	I/O cable shield termination	SHLD	

Table 36 - DC-bus Power Supply Configurable Functions

Default Configuration	Description
Digital input1 = Enable Digital input2 = Unassigned	Unassigned
	Enable
	Bus Capacitor OK
	Shunt Thermal Switch OK
	Bus Conditioner OK

Single-axis inverters, dual-axis inverters, and the regenerative bus supply have four configurable digital inputs with fast response times and ten configurable functions to choose from in the Logix Designer application.

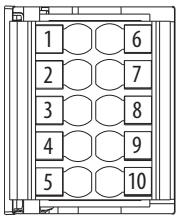

Pin Orientation for 10-pin Digital Inputs (IOD) Connector

Table 37 - Inverter and Regenerative Bus Supply Digital Input Pinouts

IOD Pin	Description	Signal	Module
1	24V current sinking fast input #1	IN1	• Inverters • Regenerative bus supply
2	I/O common for customer-supplied 24V supply	COM	
3	24V current sinking fast input #2	IN2	
4	I/O common for customer-supplied 24V supply	COM	
5	Chassis ground	SHLD	
6	24V current sinking fast input #3	IN3	
7	I/O common for customer-supplied 24V supply	COM	
8	24V current sinking fast input #4	IN4	
9	I/O common for customer-supplied 24V supply	COM	
10	Chassis ground	SHLD	

Table 38 - Inverter Configurable Functions

Default Configuration	Description
Digital input1 = Enable Digital input2 = Home Digital input3 = Registration 1 Digital input4 = Registration 2	Unassigned
	Enable
	Home
	Registration 1
	Registration 2
	Positive overtravel
	Negative overtravel
	Regeneration OK
	Bus Capacitor OK
	Shunt Thermal Switch OK
	Bus Conditioner OK

Table 39 - Regenerative Bus Supply Configurable Functions

Default Configuration	Description
Digital input1 = Enable Digital input2 = AC Line Contactor OK Digital input3 = Unassigned Digital input4 = Unassigned	Unassigned
	Enable
	Bus Capacitor OK
	Shunt Thermal Switch OK
	AC Line Contactor OK
	Bus Conditioner OK

Ethernet Communication Connector Pinout

Pin	Description	Signal	Module
1	Transmit+	TD+	• DC-bus power supply • Regenerative bus supply • Inverters • iTRAK power supply
2	Transmit–	TD–	
3	Receive+	RD+	
4	Reserved	–	
5	Reserved	–	
6	Receive–	RD–	
7	Reserved	–	
8	Reserved	–	

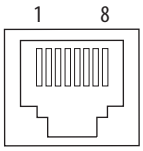

Motor Power, Brake, and Feedback Connector Pinouts

These connector pinouts apply to the single-axis and dual-axis inverter.

Table 40 - Motor Power Connector

MP Pin	Description	Signal	Color
U	Three-phase motor power	U	Brown
V		V	Black
W		W	Blue
⏚	Chassis ground	⏚	Green

ATTENTION: To avoid damage to the Kinetix 5700 system power supply and inverter, make sure the motor power signals are wired correctly. Refer to Figure 92 and Figure 93 beginning on page 148 for connector wiring examples.

IMPORTANT Drive-to-motor power cables must not exceed 90 m (295 ft), depending on feedback type and overall system design. See Appendix D, beginning on page 405, for more information.

System performance was tested at this cable length. These limitations also apply when meeting CE requirements.

Table 41 - Motor Brake Connector

BC Pin	Description	Signal
1	Motor brake connections	MBRK+
2		MBRK–

Motor Feedback Connector Pinouts

These connector pinouts apply to the single-axis and dual-axis inverter.

Table 42 - DSL Feedback Connector

MF Pin	Description	Signal
1	Bidirectional data and power for digital encoder interface	D+
2		D–
SHIELD	Cable shield and grounding plate (internal to 2198-KITCON-DSL connector kit) termination point.	SHIELD
	Cable shield and shield clamp (internal to 2198-H2DCK converter kit) termination point	

IMPORTANT Drive-to-motor power cables must not exceed 90 m (295 ft), depending on feedback type and overall system design. See Appendix D, beginning on page 405, for more information.

System performance was tested at these cable length specifications. These limitations also apply when meeting CE requirements.

Figure 62 - Pin Orientation for 2-pin DSL Feedback (MF) Connector

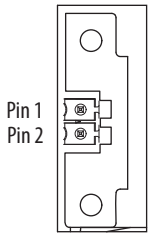

Universal Feedback Connector Pinouts

These connector pinouts apply to the single-axis and dual-axis inverter.

Table 43 - Hiperface and TTL Sine/Cosine Universal Feedback Connector

UFB Pin	Description	Signal
1	Sine differential input + A differential input +	MTR_SIN+ MTR_AM+
2	Sine differential input– A differential input–	MTR_SIN– MTR_AM–
3	Cosine differential input + B differential input +	MTR_COS+ MTR_BM+
4	Cosine differential input – B differential input –	MTR_COS– MTR_BM–
5	Data differential input/output + Index differential input +	MTR_DATA+ MTR_IM+
6	Encoder common	MTR_ECOM
7	Encoder 9V power output	MTR_EPWR9V (1)
8	Hall commutation S3 input	MTR_S3
9	Clock output +	MTR_CLK+
10	Data differential input/output – Index differential input –	MTR_DATA- MTR_IM–
11	Motor thermostat (normally closed) (2)	MTR_TS
12	Hall commutation S1 input	MTR_S1
13	Hall commutation S2 input	MTR_S2
14	Encoder 5V power output	MTR_EPWR5V (1)
15	Clock output –	MTR_CLK–

(1) Determine which power supply your encoder requires and connect to only the specified supply. Do not make connections to both supplies.
(2) Not applicable unless motor has integrated thermal protection.

Figure 63 - Pin Orientation for 15-pin Universal Feedback (UFB) Connector

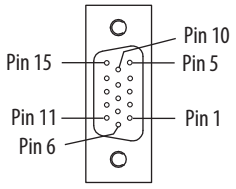

Accessory Module Pinouts

The module status (MS) connector applies to capacitor modules and DC-bus conditioner modules.

Table 44 - Module Status Connector

MS Pin	Description	Signal
1	Module status output	MS
2		MS

Understand Control Signal Specifications

This section provides a description of the Kinetix 5700 digital inputs, Ethernet communication, power and relay specifications, encoder feedback specifications, and safe torque-off features.

Digital Inputs

Digital inputs are available for the machine interface on the IOD connector. Two for the DC-bus power supply, four for the single-axis inverter, four per axis for the dual-axis inverters, and four for the regenerative bus supply. Digital inputs require a 24V DC @ 15 mA supply. These are sinking inputs that require a sourcing device. A common connection is provided on the IOD connector for each of the digital inputs.

IMPORTANT To improve registration input EMC performance, refer to the System Design for Control of Electrical Noise Reference Manual, publication GMC-RM001.

Table 45 - Understand Digital Input Functions

Functions	Description [2]	2198-P*xxx*	2198-*xxxx*-ERS*x*	2198-RP*xxx*
Enable	A 24V DC input is applied to this terminal as a condition to enable each module.	X	X	X
Home	An active state indicates to a homing sequence that the referencing sensor has been seen. Typically, a transition of this signal is used to establish a reference position for the machine axis.	–	X	–
Registration 1	An inactive-to-active transition (also known as a positive transition) or active-to-inactive transition (also known as a negative transition) is used to latch position values for use in registration moves.	–	X	–
Registration 2		–	X	–
Positive Overtravel Negative Overtravel	The positive/negative limit switch (normally closed contact) inputs for each axis require 24V DC (nominal).	–	X	–
Regeneration OK [1]	In the active state the inverters can be enabled. An inactive state indicates that the Bulletin 8720MC-RPS unit is not ready to supply DC-bus power. The inverters cannot be enabled. When a bus group is supplied by an 8720MC-RPS unit, one inverter in the bus group must be configured in the Logix Designer application as Shared-DC Non-CIP Motion™ Converter and assigned to Regeneration OK. This signal is wired from RDY on the 8720MC-RPS unit and indicates to the Kinetix 5700 drive system that the 8720MC-RPS unit is ready to supply power. Enabled inverters enumerate a Bus Power Sharing fault if the Regeneration OK input goes inactive.	–	X	–
Shunt Thermal Switch OK	When the 2198-R014, 2198-R031, or 2198-R127 external shunt resistor is wired to the DC-bus power supply, this input must be configured in the Logix Designer application to monitor the status of the external shunt module thermal switch and assigned to Shunt thermal switch OK. This function does not apply to the 2198-R004 shunt resistor. You can also use this input to monitor the status of an active shunt module in DC-bus power supply systems that are connected via the capacitor module or extension module, or in regenerative bus supply systems that are connected via the RC connector or an accessory module.	X	X	X
Bus Capacitor OK	You can configure this input in the Logix Designer application and wire the module status (MS) output from the 2198-CAPMOD-2240 capacitor module to indicate to the DC-bus power supply, regenerative bus supply, or inverters that a major fault is present on the capacitor module.	X	X	X
Bus Conditioner OK	You can configure this input in the Logix Designer application and wire the module status (MS) output from the 2198-DCBUSCOND-RP312 DC-bus conditioner module to indicate to the DC-bus power supply, regenerative bus supply, or inverters that a major fault is present on the DC-bus conditioner module.	X	X	X
AC Line Contactor OK	You can configure this input in the Logix Designer application to tell the 2198-RP*xxx* regenerative bus supply that the main AC line contactor has closed and is sending L1 . . . L3 AC line voltage. This is accomplished by wiring an auxiliary Normally Open contact off the main M1 contactor into one of the regenerative bus supply digital inputs.	–	–	X

(1) For more information on configuring a Shared-bus Non-CIP Motion Converter, refer to step 1 on page 217. For more information on wiring the 8720MC-RPS unit, refer to Figure 170 on page 356.

(2) The function is always inactive unless assigned to a digital input in the Logix Designer application. To configure your DC-bus power supply digital input for Shunt Thermal Switch OK or Bus capacitor OK, refer to step 11 on page 201. To configure your regenerative bus supply digital input for Bus Conditioner OK or AC Line Contactor OK, refer to step 11 on page 205.

Table 46 - Digital Input Specifications

Attribute	Value	Drive Module		
		2198-P*xxx*	2198-*xxxx*-ERS*x*	2198-RP*xxx*
Digital input type	Optically isolated, active high, single-ended, current sinking (EN 61131-2 Type 1)	X	X	X
Input current (with 24V applied)	12 mA, typical	X	X	X
On-state input voltage	15…30V @ 15 mA, max	X	X	X
Off-state input voltage	-1.0…5.0V	X	X	X
Pulse reject filtering (applies to registration function only)	12.0 µs	–	X	–
Pulse reject filtering (debounce filter) Applies to all other input functions, Home, for example.	20 ms, nom	X	X	X
Propagation delay (registration functions, inverters only)	0 (delay compensated)	–	X	–
Registration accuracy (inverters only)	±3 µs	–	X	–
Registration repeatability (inverters only)	700 ns	–	X	–
Windowed registration invalid-to-valid event delay (inverters only)	125 µs, min	–	X	–

Figure 64 - Digital Input Circuitry

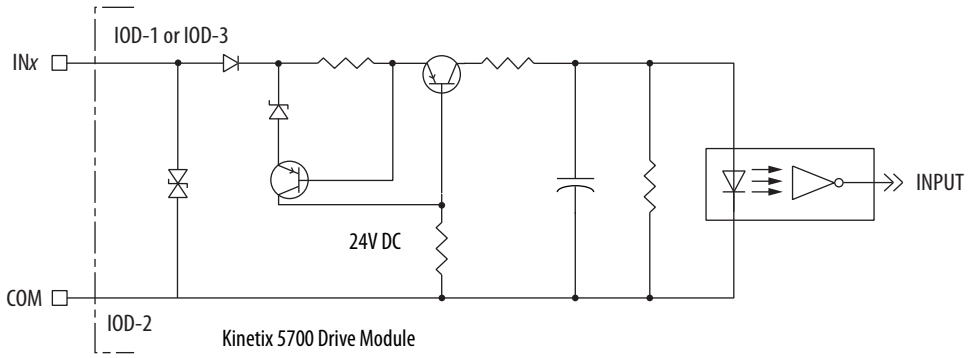

Ethernet Communication Specifications

The PORT1 and PORT2 (RJ45) Ethernet connectors provide communication with the Logix 5000™ controller.

Attribute	Value
Communication	The drive auto-negotiates speed and duplex modes. These modes can be forced through the Logix Designer application. 100BASE-TX, full duplex is recommended for maximum performance.
Cyclic update period (1)	1.0 ms, min
Embedded switch features	Three-port, cut-through, time correction on IEEE-1588 packets, limited filtering, quality of service with four priority levels
Auto MDI/MDIX crossover detection/correction	Yes
Port-to-port time synchronization variation	100 ns, max
Cabling	CAT5e shielded, 100 m (328 ft) max

(1) With CIP Security™ enabled on the 2198-P*xxx* DC-bus power supply, the cyclic update period cannot be faster than 4.0 ms.

Contactor Enable Relay

The contactor-enable circuitry includes a relay-driven contact within the 2198-P*xxx* DC-bus power supply and 2198-RP*xxx* regenerative bus supply. The relay protects the Kinetix 5700 drive system in the event of overloads or other fault conditions.

An AC three-phase mains contactor must be wired in series between the branch circuit protection and the power supply. In addition, the AC three-phase contactor control string must be wired in series with the contactor-enable relay at the contactor-enable (CED) connector. Refer to Power Wiring Examples on page 343 for wiring examples.

ATTENTION: Wiring the contactor-enable relay is required. To avoid personal injury or damage to the drive, wire the contactor-enable relay into your control string so that:

- three-phase power is removed and the power supply is protected under various fault conditions.
- three-phase power is never applied to the Kinetix 5700 drive system before control power is applied.

Figure 65 - Contactor-enable Relay Circuit

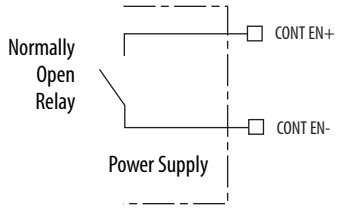

Surge suppression (diode, varistor module, RC module, or DC electronic interface) is required across the auxiliary and main contactor coils.

Table 47 - Regenerative Bus Supply (CED) Relay Output Specifications

Attribute	Value	Nominal	Maximum
On-state current	Current flow when the relay is closed.	–	1 A
On-state resistance	Contact resistance when the relay is closed.	0.1 Ω	–
Off-state voltage	Voltage across the contacts when the relay is open.	24V DC	28V DC

Table 48 - DC-bus Power Supply (CED) Relay Output Specifications

Attribute	Value	Nominal	Maximum
On-state current	Current flow when the relay is closed.	–	1 A
On-state resistance	Contact resistance when the relay is closed.	1.0 Ω	–
Off-state voltage	Voltage across the contacts when the relay is open.	24V DC	28V DC

Converter OK Relay

The converter OK circuitry includes a relay-driven contact within the 2198-RP*xxx* regenerative bus supply. The relay provides a 24V signal to non-Kinetix 5700 inverters indicating that they can draw power from the regenerative power supply and that the power supply is not faulted.

TIP This signal is intended for use with Kinetix 6000, Kinetix 6200, Kinetix 6500 Kinetix 7000, or PowerFlex drives when migrating from the 8720MC-RPS to the 2198-RP*xxx* regenerative bus supply.

Refer to Power Wiring Examples on page 343 for wiring examples.

Figure 66 - Converter OK Relay Circuit

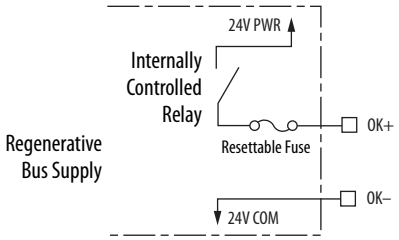

Current limited output with auto-resettable fuse.

Table 49 - Converter OK Relay Output Specifications

Attribute	Value	Min	Max
On-state current	Current flow when the relay is closed.	–	0.8 A
Off-state voltage	Voltage across the contacts when the relay is open or closed.	–	0V DC
On-state voltage		–	24V DC

Motor Brake Circuit

The brake option is a spring-set holding brake that releases when voltage is applied to the brake coil in the motor. The customer-supplied 24V power supply drives the brake output through a solid-state relay. The dual-axis inverters have separate brake circuits for each axis. The solid-state brake driver circuit provides the following:

- Brake current-overload protection
- Brake over-voltage protection

For a detailed information on vertical loads and how the servo motor holding-brake option can be used to help keep a load from falling, see the Vertical Load and Holding Brake Management Application Technique, publication MOTION-AT003.

Two connections (BC-1 and BC-2) are required for the motor brake output (refer to Figure 67). Connections are rated for 2.0 A @ +24V (dual-axis inverters) and 5.0 A @ +24V (single-axis inverters).

Figure 67 - Motor Brake Circuit

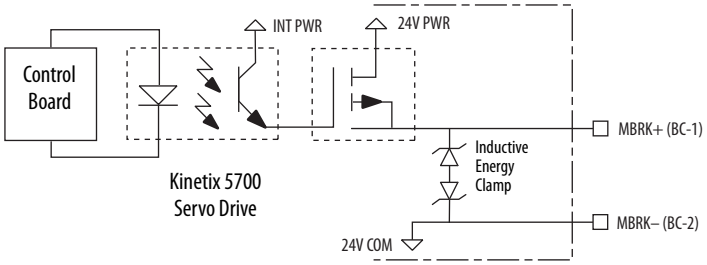

IMPORTANT Motor holding-brake switching frequency must not exceed 10 cycles/min.

Control of the solid-state relay to release the motor brake is configurable in the Logix Designer application (refer to Configure SPM Motor Closed-loop Control Axis Properties on page 246). An active signal releases the motor brake. Turn-on and turn-off delays are specified by the MechanicalBrakeEngageDelay and MechanicalBrakeReleaseDelay settings.

IMPORTANT Holding brakes that are available on Allen-Bradley® rotary motors are designed to hold a motor shaft at 0 rpm for up to the rated brake-holding torque, not to stop the rotation of the motor shaft, or be used as a safety device.

You must command the servo drive to 0 rpm and engage the brake only after verifying that the motor shaft is at 0 rpm.

These steps provide one method you can use to control a brake.

1. Wire the mechanical brake according to the appropriate interconnect diagram in Appendix A beginning on page 362.
2. Enter the MechanicalBrakeEngageDelay and Mechanical BrakeReleaseDelay times in the Logix Designer application.

   Refer to Axis Properties>Parameter List. The delay times must be from the appropriate motor family brake specifications table in the Kinetix Rotary Motion Specifications Technical Data, publication KNX-TD001.
3. Use the drive stop-action default setting (Current Decel & Disable).

   Refer to Axis Properties>Actions>Stop Action in the Logix Designer application.
4. Use the motion instruction Motion Axis Stop (MAS) to decelerate the servo motor to 0 rpm.
5. Use the motion instruction Motion Servo Off (MSF) to engage the brake and disable drive.

Control Power

The Kinetix 5700 drive modules require 24V DC (21.6...26.4V) input power for control circuitry.

IMPORTANT SELV or PELV rated power supplies must be used to energize external safety devices connected to the Kinetix 5700 safety inputs.

The National Electrical Code and local electrical codes take precedence over the values and methods provided. Implementation of these codes is the responsibility of the machine builder.

Table 50 - Control Power Current Specifications

Drive Module	Drive Module Cat. No.	24V Current Per Module (non-brake motor) A_{DC}	24V Current, max (with maximum brake current) A_{DC}	24V Inrush Current (5) A
DC-bus Power Supplies	2198-P031	0.8	–	4.0
	2198-P070			
	2198-P141	1.9		
	2198-P208			
Regenerative Bus Supplies	2198-RP088	4.3	–	4.0
	2198-RP200	5.4		
	2198-RP263	9.1		
	2198-RP312			
Dual-axis Inverters	2198-D006-ERS*x*	1.4 (2)	5.5 (3)	4.0
	2198-D012-ERS*x*			
	2198-D020-ERS*x*			
	2198-D032-ERS*x*	1.7 (2)	7.7 (3)	
	2198-D057-ERS*x*	2.3 (2)	8.3 (3)	
Single-axis Inverters	2198-S086-ERS*x*	4.6	9.6 (4)	4.0
	2198-S130-ERS*x*			
	2198-S160-ERS*x*			
	2198-S263-ERS*x*			
	2198-S312-ERS*x*			
iTRAK Power Supply (1)	2198T-W25K-ER	1.3	–	2.2
Capacitor Module	2198-CAPMOD-2240	0.1	–	7.0
Extension Module	2198-CAPMOD-DCBUS-IO	–		–
DC-bus Conditioner Module	2198-DCBUSCOND-RP312	0.1		7.0

(1) These values represent only the iTRAK power supply. They do not include the iTRAK motor modules that are connected to the iTRAK power supply and also draw current from this 24V control power input. For more information regarding 24V control power requirements, see iTRAK System with TriMax Bearings User Manual, publication 2198T-UM002, or iTRAK 5730 System User Manual, publication 2198T-UM003.
(2) Values are base current per module.
(3) Values assume two brake motors, each drawing the maximum rating of 2 A, are attached to each module.
(4) Values assume the maximum rated brake current of 5 A.
(5) Inrush current duration is less than 30 ms.

Feedback Specifications

The Kinetix 5700 drives accept motor feedback signals from Hiperface digital-servo-link (DSL) encoders on the motor feedback (MF) connector and Hiperface, incremental, and EnDat encoders on the universal feedback (UFB) connector.

IMPORTANT Auto-configuration in the Logix Designer application of intelligent absolute, high-resolution encoders, incremental, and EnDat encoders is possible with only Allen-Bradley motors.

The MF and UFB connectors can be used in the following applications:

- Motor feedback
- Auxiliary feedback-only axis
- Dual-loop control applications

Encoder Feedback Supported on the DSL Feedback Connector

The Kinetix 5700 drives support Kinetix VPL, VPC-Q, VPF, VPH, and VPS servo motors with Hiperface digital-servo-link (DSL) encoders by using the 2-pin (MF) feedback connector.

Other Allen-Bradley motors and actuators with Hiperface single-turn or multi-turn high-resolution absolute encoders are also accepted. However, to connect these devices to the MF connector, you must also use the 2198-H2DCK Hiperface-to-DSL (series B or later) converter kit for Hiperface-to-DSL feedback conversion. Alternatively, you can use the universal (UFB) feedback connector for those motors and actuators.

Encoder Feedback Supported on the UFB Feedback Connector

The Kinetix 5700 drives also support multiple types of feedback devices by using the 15-pin (UFB) universal feedback connector and sharing connector pins in many cases. Use the 2198-K57CK-D15M universal feedback connector kit for terminating the feedback conductors.

Table 51 - Universal Feedback General Specifications

Attribute	Motor Feedback	Auxiliary Feedback
Feedback device support	• Hiperface • Generic TTL Incremental • Generic Sine/Cosine Incremental • EnDat Sin/Cos (1) • EnDat Digital (2)	• Hiperface • Generic TTL Incremental • Generic Sine/Cosine Incremental • EnDat Sin/Cos (1) • EnDat Digital (2)
Power supply voltage (MTR_EPWR5V) Power supply current (MTR_EPWR5V)	5.27…5.50V (3) 300 mA, max	
Power supply voltage (MTR_EPWR9V) Power supply current (MTR_EPWR9V)	8.30…9.90V (3) 150 mA, max	
Thermostat	Single-ended, under 500 Ω = no fault, over 10 kΩ = fault	Single-ended, under 500 Ω = no fault, over 10 kΩ = fault

(1) EnDat sine/cosine encoders support only Kinetix RDB direct-drive motors.
(2) EnDat digital encoders support VPC-B*xxxxx*-Y motors and applicable third-party motors as described in Table 58 on page 115.
(3) For 2198-D*xxx*-ERS*x* (dual-axis) drives, these motor feedback voltage and current ratings are per axis.

Table 52 - Universal Feedback Signals by Device Type

UFB Pin	Hiperface	Generic TTL Incremental	Generic Sine/Cosine Incremental	EnDat Sine/Cosine	EnDat Digital
1	MTR_SIN+	MTR_AM+	MTR_SIN+	ENDAT_B+	–
2	MTR_SIN–	MTR_AM–	MTR_SIN–	ENDAT_B–	–
3	MTR_COS+	MTR_BM+	MTR_COS+	ENDAT_A+	–
4	MTR_COS–	MTR_BM–	MTR_COS–	ENDAT_A–	–
5	MTR_DATA+	MTR_IM+	MTR_IM+	MTR_DATA+	MTR_DATA+
6	MTR_ECOM	MTR_ECOM	MTR_ECOM	MTR_ECOM	MTR_ECOM
7	MTR_EPWR9V (1)	–	–	MTR_EPWR9V (1)	MTR_EPWR9V (1)
8	–	MTR_S3	MTR_S3	–	–
9	–	–	–	MTR_CLK+	MTR_CLK+
10	MTR_DATA–	MTR_IM–	MTR_IM–	MTR_DATA–	MTR_DATA–
11	MTR_TS	MTR_TS	MTR_TS	MTR_TS	MTR_TS
12	–	MTR_S1	MTR_S1	–	–
13	–	MTR_S2	MTR_S2	–	–
14	MTR_EPWR5V (1)	MTR_EPWR5V	MTR_EPWR5V	MTR_EPWR5V (1)	MTR_EPWR5V (1)
15	–	–	–	MTR_CLK–	MTR_CLK–

(1) Determine which power supply your encoder requires and connect to only the specified supply. Do not make connections to both supplies.

ATTENTION: To avoid damage to components, determine which power supply your encoder requires and connect to either the 5V or 9V supply, but not both.

Table 53 - Hiperface Specifications

Attribute	Value
Memory support	Not programmed, or programmed with Allen-Bradley motor data
Hiperface data communication	9600 baud, 8 data bits, no parity
Sine/cosine interpolation	4096 counts/sine period
Input frequency (AM/BM)	250 kHz, max
Input voltage (AM/BM)	0.6...1.2V, peak to peak, measured at the drive inputs
Line loss detection (AM/BM)	Average ($\sin^2 + \cos^2$) > constant
Noise filtering (AM and BM)	Two-stage coarse count pulse reject filter with rejected pulse tally
Incremental position verification	Position compare between incremental accumulator and serial data performed every 50 ms or less

Table 54 - Generic TTL Incremental Specifications

Attribute	Value
TTL incremental encoder support	5V, differential A quad B
Quadrature interpolation	4 counts / square wave period
Differential input voltage (MTR_AM, MTR_BM, and MTR_IM)	5V DC, differential line driver (DLD) output compatible
DC current draw (MTR_AM, MTR_BM, and MTR_IM)	30 mA, max
Input signal frequency (MTR_AM, MTR_BM, and MTR_IM)	5.0 MHz, max
Edge separation (MTR_AM and MTR_BM)	42 ns min, between any two edges
Commutation verification	Commutation angle verification performed at the first Hall signal transition and periodically verifies thereafter
Hall inputs (MTR_S1, MTR_S2, and MTR_S3)	Single-ended, TTL, open collector, or none

Table 55 - Generic Sine/Cosine Incremental Specifications

Attribute	Value
Sine/Cosine interpolation	2048 counts/sine wave period
Input frequency (MTR_SIN and MTR_COS)	250 kHz, max
Differential input voltage (MTR_SIN and MTR_COS)	0.6…1.2V, p-p
Commutation verification	Commutation angle verification performed at the first Hall signal transition and periodically verifies thereafter
Hall inputs (MTR_S1, MTR_S2, and MTR_S3)	Single-ended, TTL, open collector, or none

Refer to Encoder Phasing Definitions on page 117 for encoder phasing alignment diagrams.

Table 56 - EnDat Sine/Cosine Interface Specifications

Attribute	Value
Protocol	EnDat Sine/Cosine
EnDat Sine/Cosine data communication	2 Mbps, synchronous
Sine/Cosine interpolation	2048 counts/sine wave period
Input frequency (MTR_SIN and MTR_COS)	250 kHz, max
Differential input voltage (MTR_SIN and MTR_COS)	0.6…1.2V, p-p
Incremental position verification	Position compare between incremental accumulator and serial data performed every 50 ms or less.

Table 57 - EnDat Digital Interface Specifications

Attribute	Value
EnDat Digital data communication	4 Mbps, synchronous

Table 58 - Support Requirements for EnDat Encoders

Requirement	EnDat Sine/Cosine	EnDat Digital
Supported models	LC 483 ECI 119 (1) ECN 113 ECN 1313/EQN 1325 ECN 413/EQN 425 ROQ 425	LIC 4000 ECI 119 (1) ROQ 437 ECN 1123/ EQN 1135 ECN 1325 / EQN 1337 ECI 1319/EQI 1331 ECI 1118/EQI 1130 ECN 125
Position initialization	Digital	
Position tracking	Uses sine/cosine signals	Digital
Data frequency	100 kHz	4.125 MHz
Sine/cosine frequency	0…250 kHz	–

(1) ECI119 can be procured as either EnDat Sin/Cos or EnDat Digital.

IMPORTANT To properly support system EnDat feedback, the keying configuration in drive Module Properties of the Logix Designer application must be selected to use Kinetix 5700 drive firmware revision 5.0 or later.

IMPORTANT Unprogrammed Smart feedback devices (Hiperface Sin/Cos, Hiperface DSL, EnDat Sin/Cos, and EnDat Digital) are not supported. Unprogrammed as load or feedback-only feedback types are supported, except unprogrammed Hiperface DSL encoders. Contact your local distributor or Rockwell Automation representative for support options.

Auxiliary Feedback Specifications

The Kinetix 5700 inverters support multiple types of feedback devices by using the 15-pin (UFB) connector and sharing connector pins in many cases. Refer to Configure Feedback-only Axis Properties on page 231 to use these in your application.

Table 59 - Auxiliary Feedback Signals by Device Type

UFB Pin	Hiperface	Generic TTL Incremental	Generic Sine/Cosine Incremental	EnDat Sin/Cos	EnDat Digital
1	AUX_SIN+	AUX_AM+	AUX_SIN+	ENDAT_B+	–
2	AUX_SIN-	AUX_AM-	AUX_SIN-	ENDAT_B–	–
3	AUX_COS+	AUX_BM+	AUX_COS+	ENDAT_A+	–
4	AUX_COS-	AUX_BM-	AUX_COS-	ENDAT_A–	–
5	AUX_DATA+	AUX_IM+	AUX_IM+	AUX_DATA+	AUX_DATA+
6	AUX_ECOM	AUX_ECOM	AUX_ECOM	AUX_ECOM	AUX_ECOM
7	AUX_EPWR9V (1)	–	–	AUX_EPWR9V (1)	AUX_EPWR9V (1)
9	–	–	–	AUX_CLK+	AUX_CLK+
10	AUX_DATA-	AUX_IM-	AUX_IM-	AUX_DATA-	AUX_DATA-
14	AUX_EPWR5V (1)	AUX_EPWR5V	AUX_EPWR5V	AUX_EPWR5V (1)	AUX_EPWR5V (1)
15	–	–	–	AUX_CLK-	AUX_CLK-

(1) Determine which power supply your encoder requires and connect to only the specified supply. Do not make connections to both supplies.

ATTENTION: To avoid damage to components, determine which power supply your encoder requires and connect to either the 5V or 9V supply, but not both.

Specifications for the auxiliary feedback channel are identical to the motor feedback channel, except for specifications related to commutation and BLOB programming.

The 9.0V and 5.0V power supplies for auxiliary feedback devices are shared with the motor feedback channel, and the total current capability is outlined in the table on page 112.

Allen-Bradley Bulletin 842HR, 844D, 847H, and 847T encoders are the preferred encoders for auxiliary feedback connections.

Table 60 - Allen-Bradley Auxiliary Feedback Encoders

Cat. No.	Description
842HR-MJDZ115FWYD (multi-turn) 842HR-SJDZ115FWYD (single-turn)	Size 25, sine/cosine (serial), square flange, 3/8 in. solid shaft with flat, 5…12V DC, digital RS-485 interface, M23, 17-pin connector
844D-B5CC1FW	HS35, hollow-shaft incremental encoders, rear (through-shaft), 5/8 inch, tether, 3/8 in. bolt on a 2.5…4.0 in. diameter, 5V DC in, 5V DC DLD out, MS connector, 10-pin
844D-B5CC1CS	
844D-B5CC1DR	
847H-DN1A-RH01024	Size 25, incremental encoder, standard square flange, 3/8 inch diameter shaft with flat, 4.5…5.5V line driver, TTL (B-Leads-A, CW, Z gated with BN), MS connector, 10-pin
847H-DN1A-RH02048	
847H-DN1A-RH05000	
847T-DN1A-RH01024	Size 20, incremental encoder, standard square flange, 3/8 inch diameter shaft with flat, 4.5…5.5V line driver, TTL (B-Leads-A, CW, Z gated with BN), MS connector, 10-pin
847T-DN1A-RH02048	

You can add and configure the Allen-Bradley Bulletin 842E-CM Integrated Motion on EtherNet/IP™ absolute encoder into your Studio 5000 Logix Designer® application to function as a feedback-only CIP Motion axis in the Logix 5000 controller.

Table 61 - Allen-Bradley 842E-CM Absolute Network Encoders

Cat. No.	Description
842E-CM-M*xxxx* (30-bit multi-turn) 842E-CM-S*xxxx* (18-bit single-turn)	• Support for the standard motion instruction set in the Studio 5000 Logix Designer application • EtherNet/IP interface compliant with IEEE 1588 • Support for linear, ring, and star Ethernet topologies • IP67 environmental rating • Available with solid and hollow shaft

The Allen-Bradley Bulletin 843ES CIP Safety™ absolute network encoder is designed for safety applications that require speed, direction, or position monitoring safety functions.

Table 62 - Allen-Bradley 843ES Absolute Network Encoders

Cat. No.	Description
843ES-MIP*x*BA*x* (12-bit multi-turn) 843ES-SIP*x*BA*x* (18-bit standard, 15-bit safety resolution single-turn)	• Rated up to and including SIL 3 according to IEC 61800-5-2, IEC 620261, and IEC 61508-1 • Rated up to and including PLe, Cat. 3, according to ISO 13849-1 • Clamping, synchro, and square flange options for solid shaft • Blind-hollow shaft available with stator coupling • Feather-key solid shaft to prevent relative rotation • Dual Ethernet ports with embedded EtherNet/IP switch for linear networks and Device Level Ring topologies • IP67 washdown rating

Refer to the Kinetix Motion Accessories Technical Data, publication KNX-TD004, for more information on these Allen-Bradley encoders.

Encoder Phasing Definitions

For TTL encoders, the drive position increases when A leads B. Clockwise motor rotation is assumed, when looking at the shaft.

Figure 68 - TTL Encoder Phasing

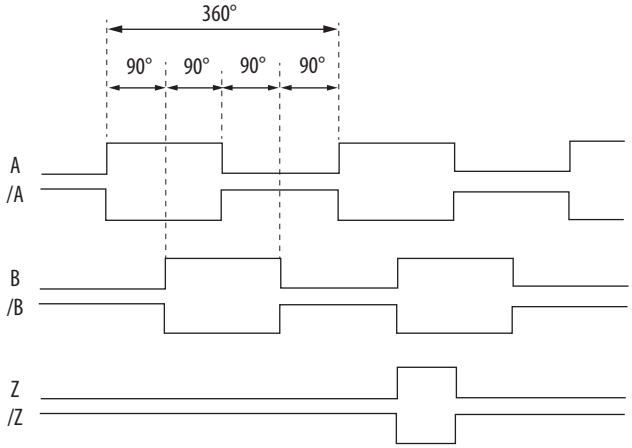

For Sin/Cos encoders (Hiperface and EnDat), the drive position increases when Cosine (B) leads Sine (A). Clockwise motor rotation is assumed, when looking at the shaft.

Figure 69 - Sine/Cosine Encoder Phasing

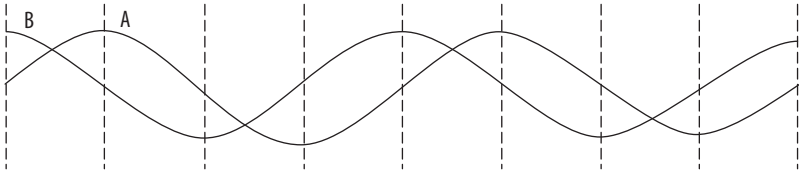

IMPORTANT The Sine/Cosine encoder signal phasing is different than the TTL encoder signal phasing.

IMPORTANT When using an incremental Sine/Cosine feedback device, the drive cannot synthesize a marker signal, so a physical marker signal is required for the home-to-marker sequence (and the marker hookup test) to complete.

When using absolute feedback devices (for example, Hiperface) the drive synthesizes a marker signal because these devices don't have a marker signal required for the home-to-marker sequence (and the marker hookup test) to complete.

The drive UFB feedback connector uses Hall signals to initialize the commutation angle for permanent magnet motor commutation.

Figure 70 - Hall Encoder Phasing

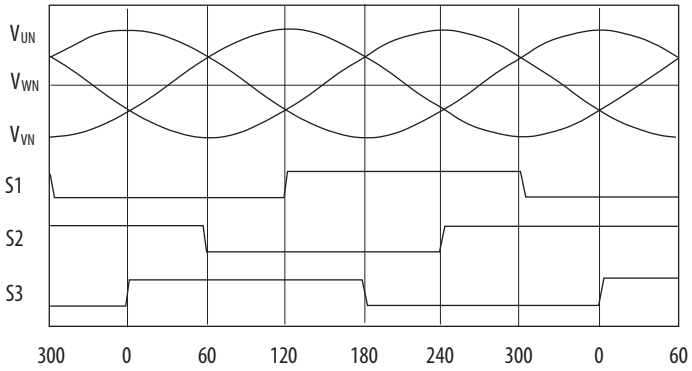

Absolute Position Feature

The absolute position feature tracks the position of the motor, within the multi-turn retention limits, while the drive is powered off. The absolute position feature is available with only multi-turn encoders.

Table 63 - Absolute Position Retention Limits

Encoder Type	Cat. No. Designator	Motor Cat. No.	Actuator Cat. No.	Retention Limits	
				Turns (rotary)	mm (linear)
Hiperface DSL	-P	VPL-A/B*xxxxx*-P VPF-A/B*xxxxx*-P VPS-B*xxxxx*-P	VPAR-A/B*xxxxx*-P	4096 (±2048)	–
	-W	VPL-A/B*xxxxx*-W, VPF-A/B*xxxxx*-W VPH-A/B*xxxxx*-W	VPAR-B*xxxxx*-W	4096 (±2048)	–
	-Q	VPL-A/B*xxxxx*-Q VPC-B*xxxxx*-Q VPF-A/B*xxxxx*-Q VPH-A/B*xxxxx*-Q	VPAR-B*xxxxx*-Q	512 (±256)	–
Hiperface	-M	VPC-B3004*x*-M MPL-A/B*xxxxx*-M MPM-A/B*xxxxx*-M MPF-A/B*xxxxx*-M MPS-A/B*xxxxx*-M	MPAR-A/B3*xxxx*-M MPAI-A/B*xxxxx*M	2048 (±1024)	–
	-V	MPL-A/B*xxxxx*-V	MPAS-A/B*xxxx*1-V05, MPAS-A/B*xxxx*2-V20 MPAR-A/B1*xxxx*-V, MPAR-A/B2*xxxx*-V MPAI-A/B*xxxxx*V	4096 (±2048)	–
Hiperface (magnetic scale)	-*x*D*x*	–	LDAT-S*xxxxxx*-*x*D*x*	–	960 (37.8)
EnDat	-7	RDB-B*xxxxxx*-7	–	1024 (±512)	–
	-Y	VPC-B*xxxxx*-Y	–	128 (±64)	–

Figure 71 - Absolute Position Limits (measured in turns)

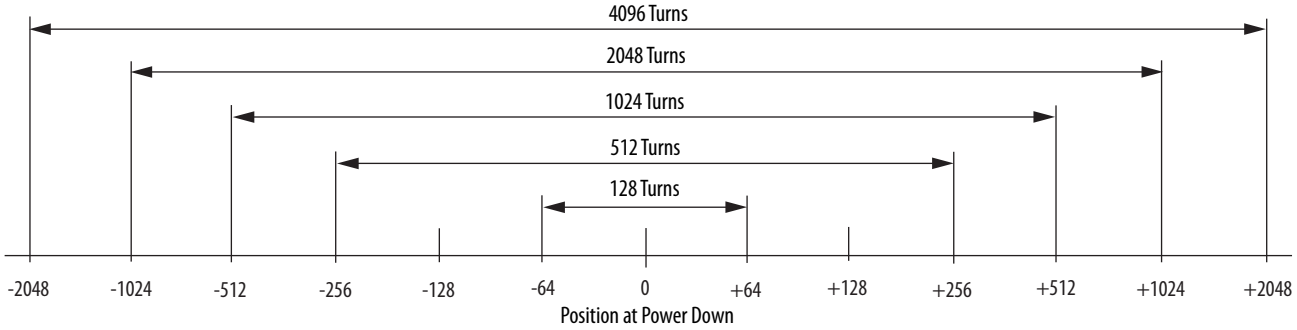

Functional Safety Features

Kinetix 5700 servo drives have safe torque-off (STO) capability and can safely turn off the inverter power transistors in response to the removal of the STO digital inputs, resulting in Stop Category 0 behavior. Hardwired and integrated safety options are available on all Kinetix 5700 servo drives.

Hardwired STO Mode

Hardwired safe torque-off (STO) mode supports parallel input terminals for cascading to adjacent drives over duplex wiring. For applications that do not require the safety function you must install jumper wires to bypass the safe torque-off feature. This applies to 2198-*xxxx*-ERS3 and 2198-*xxxx*-ERS4 inverters.

Refer to Hardwired Safe Torque-off on page 312 for the STO connector pinout, installation, and wiring information.

Integrated Mode

For 2198-*xxxx*-ERS3 inverters in integrated STO mode, when any GuardLogix® or Compact GuardLogix safety controller issues the safe torque-off (STO) command over the EtherNet/IP network and the Kinetix 5700 drives execute the STO commands.

Refer to Integrated Safe Torque-off on page 322 for integrated safety drive specifications, configuring motion and safety connections, direct motion commands, and the STO bypass feature.

For 2189-*xxxx*-ERS4 inverters in integrated mode, the GuardLogix 5580 or Compact GuardLogix 5380 safety controller activates the Monitored SS1 stopping function or any of the Drive Safety instructions providing controller-based safety functions over the EtherNet/IP network.

For 2189-*xxxx*-ERS4 and 2189-*xxxx*-ERS3 (series B) drives, Timed SS1 and STO are drive-based safety functions that are activated by the GuardLogix 5580 or Compact Guardlogix 5380 controller over the EtherNet/IP network.

Refer to the Kinetix 5700 Safe Monitor Functions Safety Reference Manual, publication 2198-RM001, for a description and configuration examples of the integrated stopping functions in the Studio 5000 Logix Designer application.

Connect the Kinetix 5700 Drive System

This chapter provides procedures for wiring your Kinetix® 5700 system components and making cable connections.

Topic	Page
Basic Wiring Requirements	122
Input Power Configurations for Kinetix 5700 Power Supplies	123
Ground Screw/Jumper Settings	129
Remove/Install the Ground Screw/Jumper	131
Ground the Drive System	134
Wiring Requirements	136
Wiring Guidelines	140
Wire the Power Connectors	140
Wire the Digital Input Connectors	144
Wire Motor Power and Brake Connectors	147
Connect Single Cables	154
Connect Power/Brake and Feedback Cables	158
Customer-supplied Motor Power Cables	173
Accessory Module Connections	176
External Passive-shunt Connections	177
External Active-shunt Connections	178
Ethernet Cable Connections	181

Basic Wiring Requirements

This section contains basic wiring information for the Kinetix 5700 drive system power supplies, servo drives, the iTRAK® power supply, and accessories.

ATTENTION: Plan the installation of your system so that you can perform all cutting, drilling, tapping, and welding with the system removed from the enclosure. Because the system is of the open type construction, be careful to keep metal debris from falling into it. Metal debris or other foreign matter can become lodged in the circuitry and result in damage to components.

SHOCK HAZARD: To avoid hazard of electrical shock, perform all mounting and wiring of the Bulletin 2198 drive modules prior to applying power. Once power is applied, connector terminals can have voltage present even when not in use.

IMPORTANT This section contains common PWM servo system wiring configurations, size, and practices that can be used in a majority of applications. National Electrical Code, local electrical codes, special operating temperatures, duty cycles, or system configurations take precedence over the values and methods provided.

Routing the Power and Signal Cables

Be aware that when you route power and signal wiring on a machine or system, radiated noise from nearby relays, transformers, and other electronic devices can be induced into I/O communication, or other sensitive low voltage signals. This can cause system faults and communication anomalies.

The Bulletin 2090 single motor cable contains the power, brake, and feedback wires, but is properly shielded to protect the noise-sensitive feedback signals.

Refer to Electrical Noise Reduction on page 65 for examples of routing high and low voltage cables in wireways. Refer to the System Design for Control of Electrical Noise Reference Manual, publication GMC-RM001, for more information.

Input Power Configurations for Kinetix 5700 Power Supplies

The Kinetix 5700 drive system power supply can be either the 2198-P*xxx* DC-bus power supply or the 2198-RP*xxx* regenerative bus supply. The input power components and wiring depend on which power supply is used.

DC-bus Power Supply

Before wiring input power to your 2198-P*xxx* DC-bus power supply, you must determine the type of input power within your facility. The drive modules are designed to operate in both grounded and ungrounded environments.

IMPORTANT For IEC 61800-3 category C3 compliance, use the appropriate 2198-DBR*xx*-F line filter with a grounded WYE configuration. The use of a line filter in an ungrounded, corner-grounded, or impedance-grounded configuration can affect the line filter components and result in equipment damage.

2198-DB*xx*-F line filters also provide compliance, but are not the preferred solution because they require inverter ground jumpers installed manually.

Grounded Power Configurations

The grounded (WYE) power configuration grounds your three-phase power at a neutral point. This type of grounded power configuration is preferred.

Figure 72 - Grounded Power Configuration (WYE Secondary)

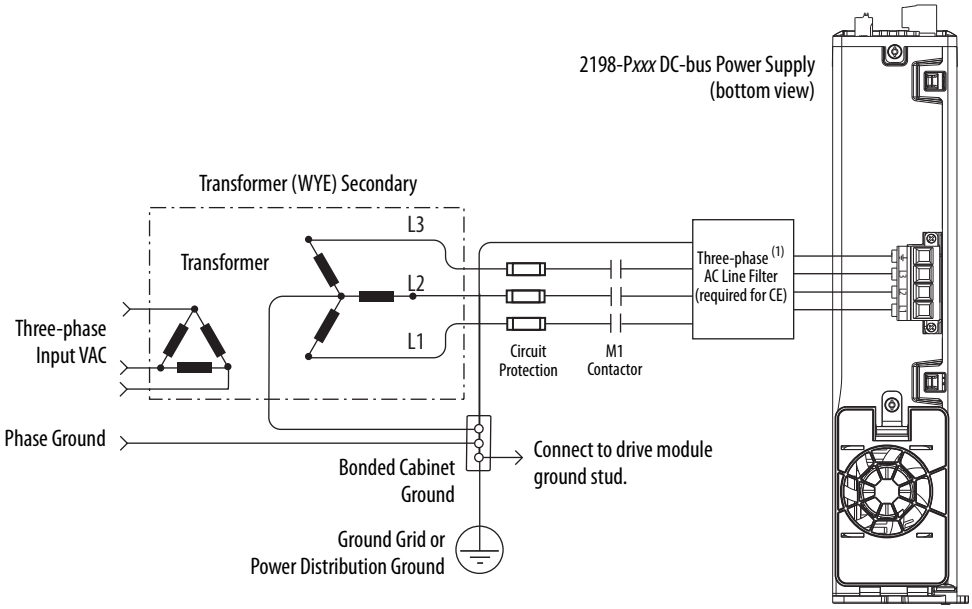

(1) When using 2198-DB*xx*-F line filter, 2198-P*xxx* power supply has the ground jumper installed and 2198-*xxxx*-ERS*x* inverters have the ground jumpers installed.
When using 2198-DBR*xx*-F line filter, 2198-P*xxx* power supply has the ground jumper installed, 2198-*xxxx*-ERS*x* inverters have the ground jumpers removed.

Figure 73 - Impedance-grounded Power Configuration (WYE secondary)

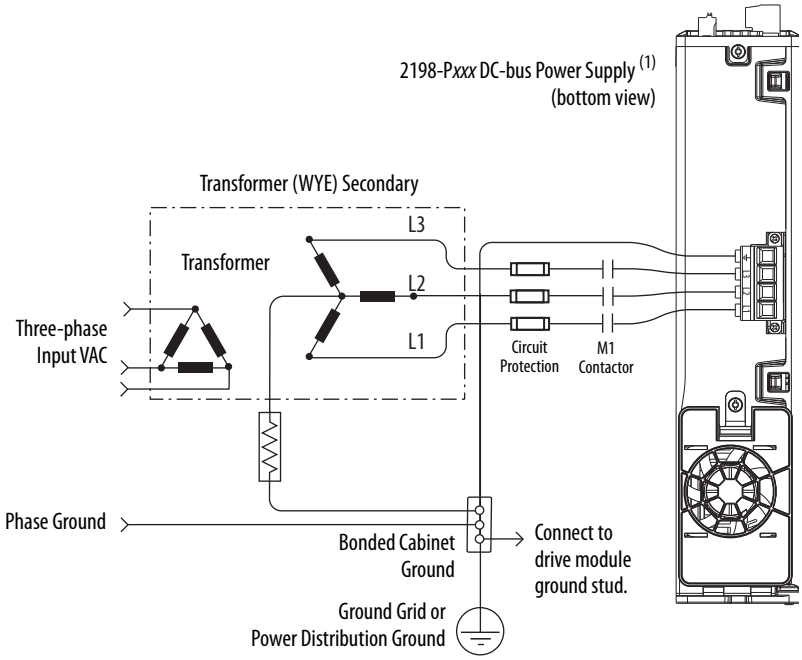

(1) 2198-P*xxx* power supply has the ground jumper removed. 2198-*xxxx*-ERS*x* inverters have the ground jumpers removed.

Figure 74 - Corner-grounded Power Configuration (Delta secondary)

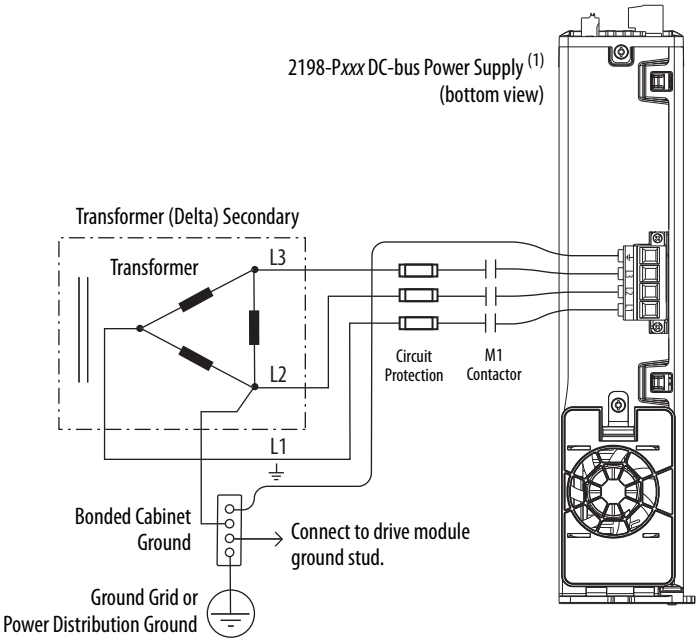

(1) 2198-P*xxx* power supply has the ground jumper removed. 2198-*xxxx*-ERS*x* inverters have the ground jumpers removed.

Refer to Power Wiring Examples beginning on page 343 for input power interconnect diagrams.

Ungrounded Power Configurations

The ungrounded power configuration (Figure 75), corner-grounded (Figure 74), and impedance-grounded (Figure 73) power configurations do not provide a neutral ground point.

IMPORTANT If you determine that you have ungrounded, corner-grounded, or impedance-grounded power distribution in your facility, you must remove the ground screw in each of your DC-bus power supplies, iTRAK power supplies, and dual-axis inverters, and the ground jumper in each of your single-axis inverters.

Refer to Ground Screw/Jumper Settings on page 129 for more information.

Figure 75 - Ungrounded Power Configuration

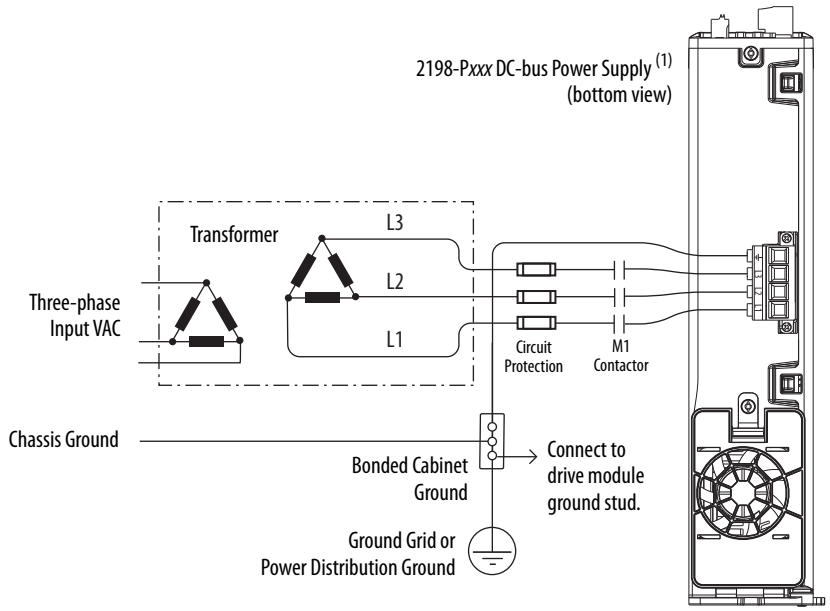

(1) 2198-P*xxx* power supply has the ground jumper removed. 2198-*xxxx*-ERS*x* inverters have the ground jumpers removed.

ATTENTION: Ungrounded and corner-grounded systems do not reference each phase potential to a power distribution ground. This can result in an unknown potential to earth ground. Drive-to-motor cable lengths are limited with these AC power source types. See Appendix D, beginning on page 405, for more information.

Refer to Power Wiring Examples beginning on page 343 for input power interconnect diagrams.

Regenerative Bus Supply

Before wiring input power to your 2198-RP*xxx* regenerative bus supply, you must determine the type of input power within your facility. The regenerative bus supply is designed to operate in grounded-wye and impedance grounded environments. Corner-grounded and ungrounded power can be used, but you must add an isolation transformer to the input power circuit to provide grounded-wye power.

ATTENTION: For IEC 61800-3 category C3 compliance, use the appropriate 2198-DBR*xx*-F AC line filter with a grounded WYE configuration. Use of the AC line filter in an ungrounded or corner-grounded configuration (without an isolation transformer) or in an impedance-grounded configuration can affect the line filter components and result in equipment damage. 2198-DB*xx*-F line filters are not compatible with regenerative bus supplies.

Grounded Power Configurations

This grounded (WYE) power configuration (Figure 76) grounds the three-phase input power at a neutral point. This is the preferred grounded power configuration.

Figure 76 - Grounded Power Configuration (WYE secondary)

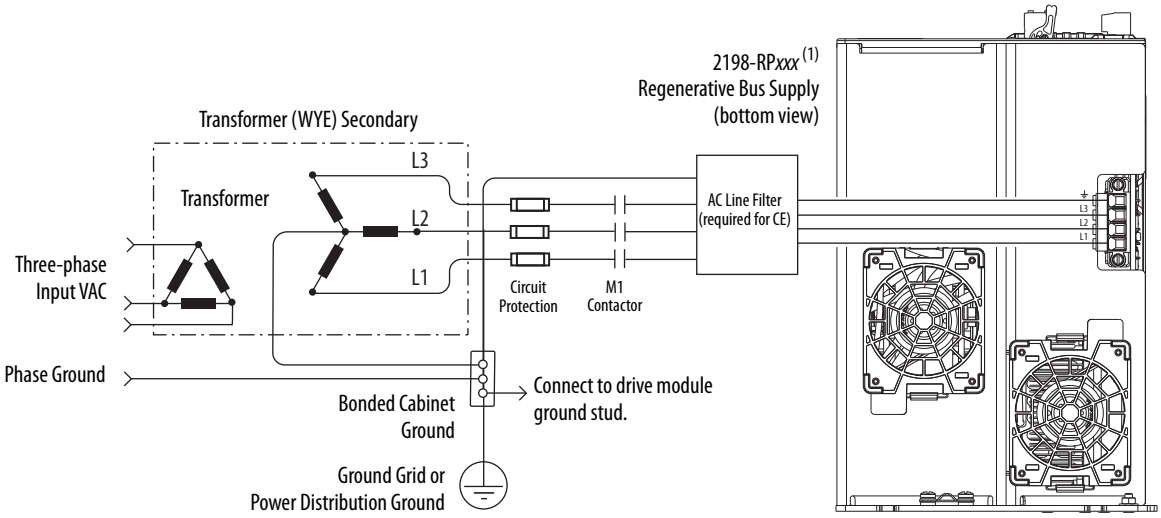

(1) 2198-RP*xxx* power supply has the ground jumper installed. 2198-*xxxx*-ERS*x* inverters have the ground jumpers removed.

This impedance-grounded power configuration (Figure 77) does not provide a neutral ground point.

ATTENTION: Ungrounded systems do not reference each phase potential to a power distribution ground. This can result in an unknown potential to earth ground.

Figure 77 - Impedance-grounded Power Configuration (WYE secondary)

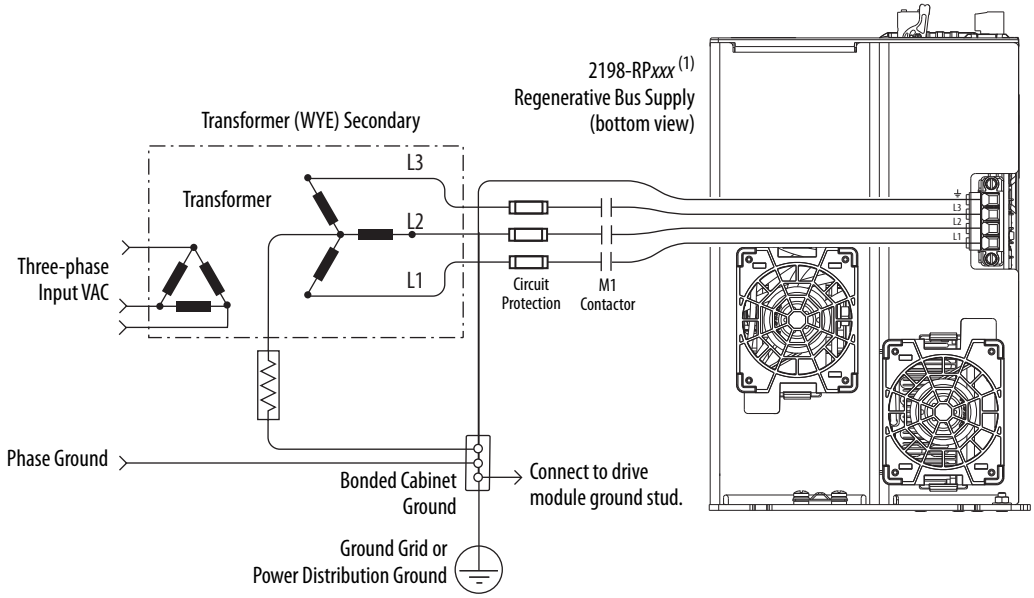

(1) 2198-RP*xxx* power supply has the ground jumper removed. 2198-*xxxx*-ERS*x* inverters have the ground jumpers removed.

IMPORTANT If you determine that you have impedance-grounded power distribution in your facility, you must remove the ground screw in your regenerative power supply, iTRAK power supplies, and dual-axis inverters, and the ground jumper in each of your single-axis inverters.

Refer to Ground Screw/Jumper Settings on page 129 for more information.

This corner-grounded power configuration (Figure 78) includes an isolation transformer that results in grounded-wye power distribution.

Figure 78 - Corner-grounded Power Configuration (with isolation transformer)

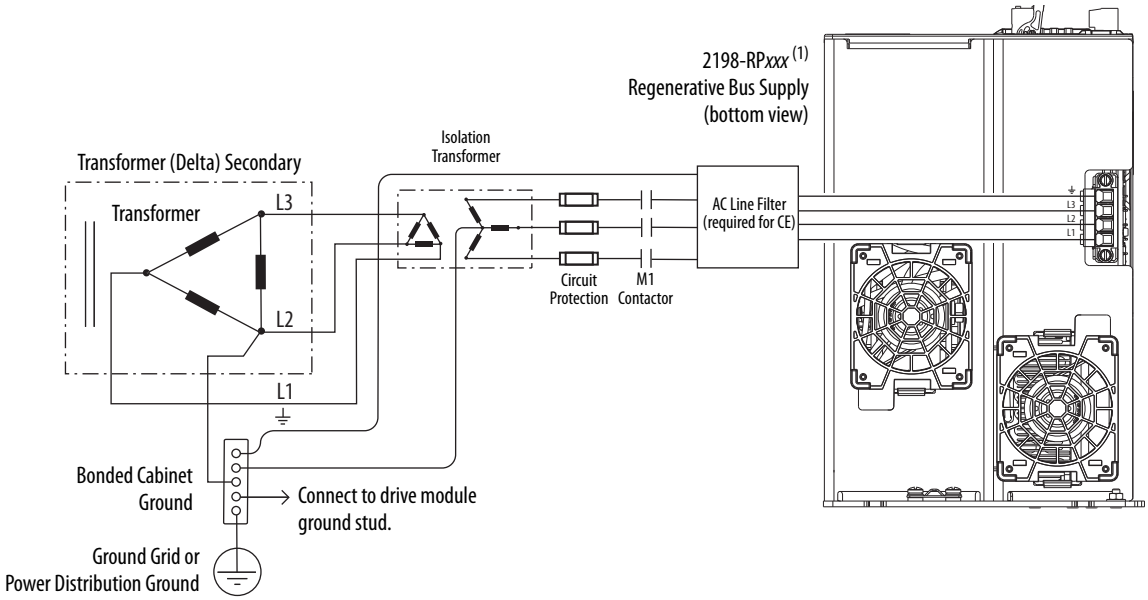

(1) 2198-RP*xxx* power supply has the ground jumper installed. 2198-*xxxx*-ERS*x* inverters have the ground jumpers removed.

Refer to Power Wiring Examples beginning on page 343 for input power interconnect diagrams.

Ungrounded Power Configurations

This ungrounded power configuration (Figure 79) includes an isolation transformer that results in grounded-wye power distribution.

Figure 79 - Ungrounded Power Configuration (with isolation transformer)

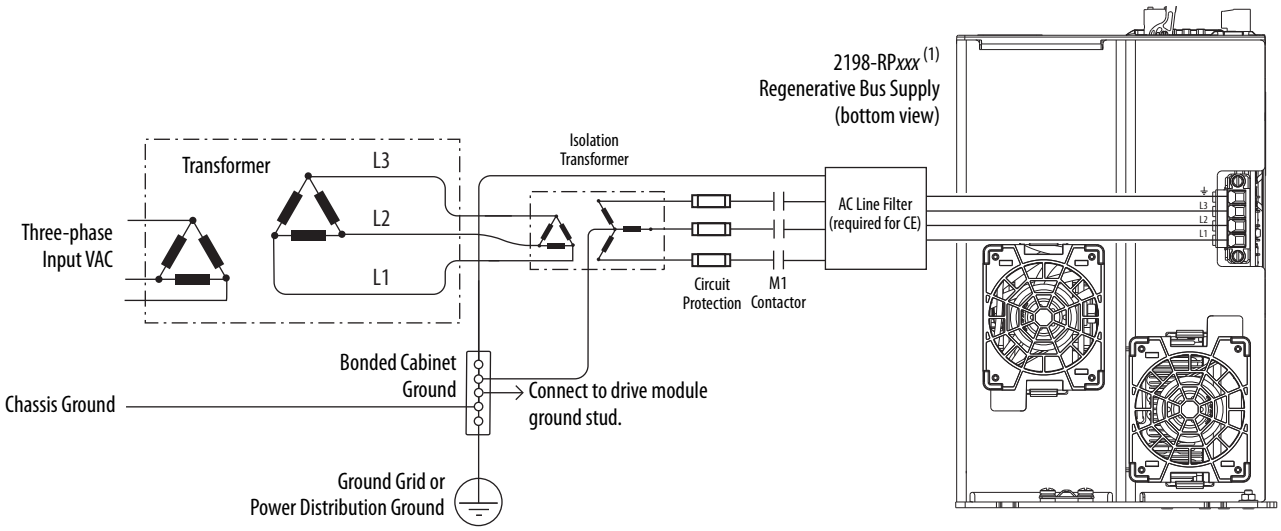

(1) 2198-RP*xxx* power supply has the ground jumper installed. 2198-*xxxx*-ERS*x* inverters have the ground jumpers removed.

Ground Screw/Jumper Settings

Determine the ground screw/jumper setting for your Kinetix 5700 drive system power supply, iTRAK power supply, and Kinetix 5700 inverters.

Kinetix 5700 Drive System Power Supply

The Kinetix 5700 drive system power supply can be either 2198-P*xxx* DC-bus power supply or 2198-RP*xxx* regenerative bus supply.

DC-bus Power Supply

The 2198-P*xxx* DC-bus power supply has a factory-installed ground screw for grounded-wye power distribution. Table 64 summarizes the ground screw/jumper settings for the 2198-P*xxx* DC-bus power supply.

Table 64 - Ground Screw Setting for the DC-bus Power Supply

Ground Configuration	Example Diagram	2198-P*xxx* DC-bus Power Supply
Grounded (wye)	Figure 72 on page 123	Ground screw installed (default setting) (1)
• Impedance grounded • Corner grounded • AC-fed ungrounded	Figure 73 on page 124 Figure 74 on page 124 Figure 75 on page 125	Remove ground screw/jumper

(1) Ground screw is factory installed.

IMPORTANT If you have grounded-wye power distribution in your facility, do not remove the ground screw from the DC-bus power supply. Remove the ground screw when using ungrounded, corner-grounded, or impedance-grounded power.

Regenerative Bus Supply

The 2198-RP*xxx* regenerative bus supply includes a factory-installed ground jumper for grounded-wye power distribution. Table 65 summarizes the ground jumper settings for the 2198-RP*xxx* regenerative bus supply.

Table 65 - Ground Jumper Setting for the Regenerative Bus Supply

Ground Configuration	Example Diagram	2198-RP*xxx* Regenerative Bus Supply
• Grounded (wye) • Corner-grounded with isolation transformer • Ungrounded with isolation transformer	Figure 76 on page 126 Figure 78 on page 128 Figure 79 on page 128	Ground jumper is factory installed (default setting)
Impedance grounded	Figure 77 on page 127	Remove ground jumper (1)

(1) When the regenerative bus supply ground jumper is removed, it can be permanently stored in threaded holes at the bottom of the chassis.

IMPORTANT If you have grounded-wye power distribution in your facility, or corner-grounded or ungrounded power with an isolation transformer, do not remove the ground jumper from the regenerative bus supply. Remove the ground jumper when using impedance-grounded power.

Kinetix 5700 Inverters

The 2198-D*xxx*-ERS*x* dual-axis and 2198-S*xxx*-ERS*x* single-axis inverters also have a ground screw/jumper setting that depends on the input-power ground configuration and whether a 2198-DB*xx*-F or 2198-DBR*xx*-F filter is used.

Table 66 summarizes the ground screw/jumper default settings for the 2198-*xxxx*-ERS*x* inverters.

Table 66 - Ground Screw/Jumper Setting for 2198-*xxxx*-ERS*x* Inverters

2198-*xxxx*-ERS3 (series A)	2198-*xxxx*-ERS3 (series B)	2198-*xxxx*-ERS4
Ground screw is factory installed (default setting)	Ground screw/jumper is not installed [1] (default setting)	

(1) Ground screw/jumper is included with the drive, but not installed.

Table 67 summarizes the ground screw/jumper settings required for the 2198-*xxxx*-ERS*x* inverters depending on the Kinetix 5700 power supply in use.

Table 67 - Ground Screw/Jumper Setting for 2198-*xxxx*-ERS*x* Inverters

AC Power Source Type	Inverter Ground Jumper Setting Based on Selected Power Supply	
	2198-P*xxx* [1] DC-bus Power Supply	• 2198-P*xxx* DC-bus Power Supply [2] • 2198-RP*xxx* Regenerative Bus Supply • 8720MC-RPS Regenerative Power Supply • Any Other Active Converter
Grounded (wye)	Inverter ground screw/ jumper installed.	Inverter ground screw/jumper not installed [3].
• AC-fed ungrounded • Corner grounded • Impedance grounded	Inverter ground screw/ jumper not installed.	

(1) 2198-P*xxx* DC-bus power supply when 2198-DB20-F, 2198-DB42-F, 2198-DB80-F, or 2198-DB290-F AC line filter is used.
(2) 2198-P*xxx* DC-bus power supply when 2198-DBR20-F, 2198-DBR40-F, 2198-DBR90-F, or 2198-DBR200-F AC line filter is used.
(3) When the 2198-S263-ERS*x* or 2198-S312-ERS*x* inverter ground jumper is removed, it can be permanently stored in threaded holes at the bottom of the chassis.

IMPORTANT If you have grounded-wye power distribution and the 2198-P*xxx* DC-bus power supply with:

- 2198-DB20-F, 2198-DB42-F, 2198-DB80-F, or 2198-DB290-F AC line filters, install the ground jumper in the inverters. EMC performance can be affected if the ground jumper is not installed.
- 2198-DBR20-F, 2198-DBR40-F, 2198-DBR90-F, or 2198-DBR200-F AC line filters, remove the ground jumper in the inverters. Ground jumper removed is preferred when using the 2198-DBR*xx*-F AC line filters. EMC performance is achieved with or without the ground jumper installed.

IMPORTANT If you are using the 2198-RP*xxx* regenerative bus supply, always remove the ground jumper in the inverters.

Kinetix 5700 iTRAK Power Supply

The 2198T-W25K-ER iTRAK power supply has a factory-installed ground screw for grounded-wye power distribution.

Table 68 summarizes the ground screw settings required for the 2198T-W25K-ER iTRAK power supply depending on the AC power source.

Table 68 - Ground Screw Setting for 2198T-W25K-ER iTRAK Power Supply

AC Power Source Type	2198-P*xxx* (1) (2) DC-bus Power Supply
Grounded (wye)	Ground screw installed (default setting).
• AC-fed ungrounded • Corner grounded • Impedance grounded	Ground screw not installed.

(1) 2198-P*xxx* DC-bus power supply when 2198-DB20-F, 2198-DB42-F, 2198-DB80-F, or 2198-DB290-F AC line filter is used.
(2) L16 motor modules are compatible with only the grounded-wye configuration.

IMPORTANT If you have grounded-wye power distribution and the 2198-P*xxx* DC-bus power supply with:

- 2198-DB20-F, 2198-DB42-F, 2198-DB80-F, or 2198-DB290-F AC line filters, install the ground jumper in the iTRAK power supply. EMC performance can be affected if the ground jumper is not installed.
- 2198-DBR20-F, 2198-DBR40-F, 2198-DBR90-F, or 2198-DBR200-F AC line filters, remove the ground jumper in the iTRAK power supply. Ground jumper removed is preferred when using the 2198-DBR*xx*-F AC line filters. EMC performance is achieved with or without the ground jumper installed.

Remove/Install the Ground Screw/Jumper

We recommend that you remove or install the ground screw/jumper when the drive module is removed from the panel and placed on its side on a solid work surface (does not apply to catalog numbers 2198-RP*xxx*, 2198-S263-ERS*x*, or 2198-S312-ERS*x*).

IMPORTANT To determine if you need to remove or install the ground screw/jumper, see Ground Screw/Jumper Settings on page 129.

ATTENTION: When the ground screw/jumper is not installed on DC-bus power supplies, the risk of equipment damage exists because the unit no longer maintains line-to-neutral or line-to-line voltage protection.

To access or remove/install the ground screw on DC-bus power supplies, dual-axis inverters, and the iTRAK power supply, open the small plastic door on the right side of the module.

Figure 80 - Remove/Install the Ground Screw

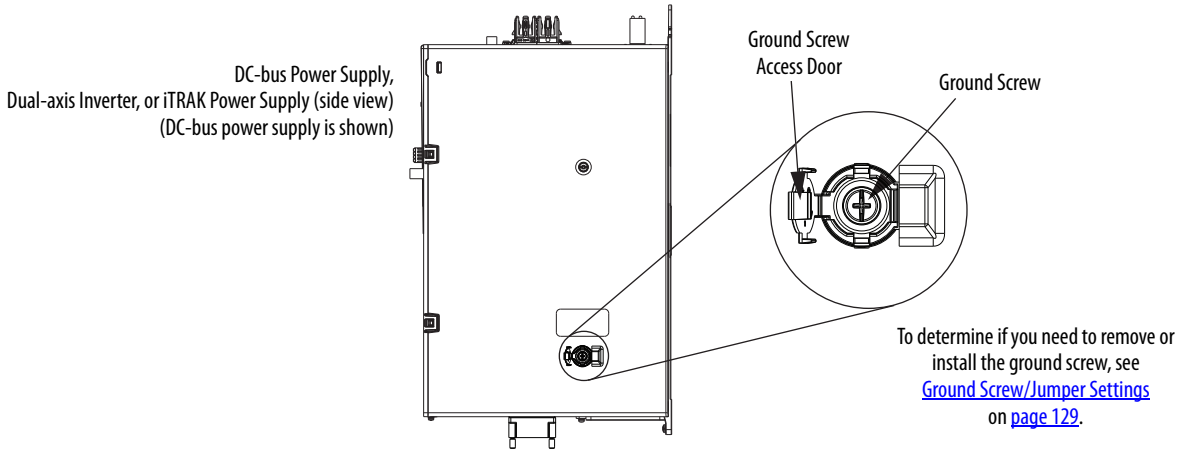

ATTENTION: To avoid personal injury, the ground screw/jumper access door must be kept closed when power is applied. If power was present and then removed, wait at least 5 minutes for the DC-bus voltage to dissipate and verify that no DC-bus voltage exists before accessing the ground screw/jumper. This applies to the DC-bus power supply, regenerative bus supply, dual-axis inverters, and single-axis inverters.

Single-axis inverters (catalog numbers 2198-S086-ERS*x*, 2198-S130-ERS*x*, and 2198-S160-ERS*x*) have a ground-jumper access door on the back of the unit. Two captive screws secure the jumper.

Figure 81 - Remove/Install the Single-axis Inverter Ground Jumper

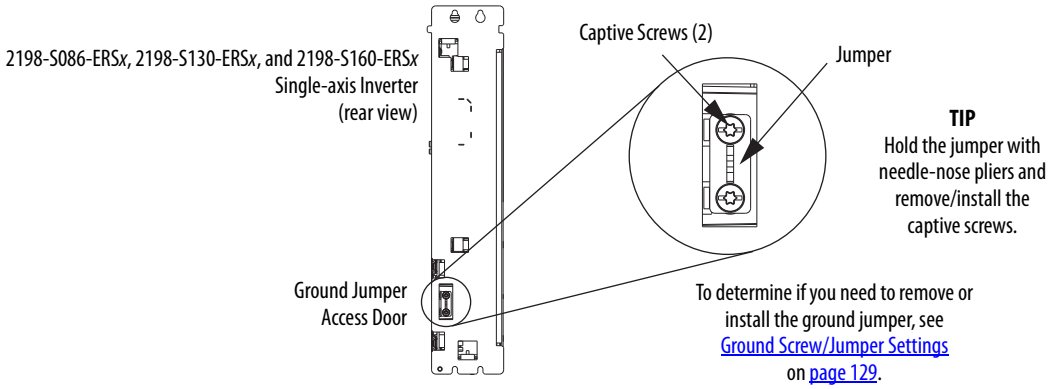

Regenerative bus supplies (catalog numbers 2198-RP*xxx*) and single-axis inverters (catalog numbers 2198-S263-ERS*x* and 2198-S312-ERS*x*) have a ground-jumper access door on the front of the unit. Two captive screws secure the jumper.

Figure 82 - Remove/Install the Ground Jumper

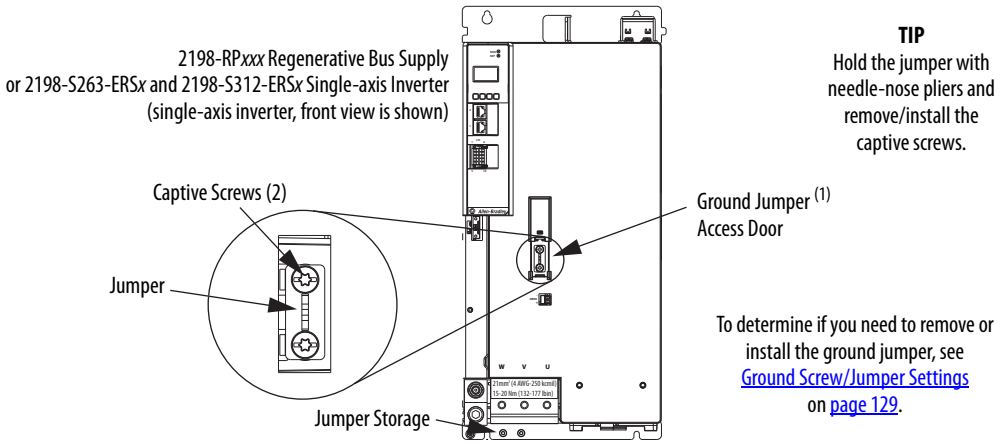

(1) When the regenerative bus supply or 2198-S263-ERS*x* or 2198-S312-ERS*x* inverter ground jumper is removed, it can be permanently stored in threaded holes at the bottom of the chassis.

ATTENTION: Risk of equipment damage exists. The module ground configuration must be accurately determined. See Ground Screw/Jumper Settings on page 129.

Ground the Drive System

All equipment and components of a machine or process system must have a common earth-ground point that is connected to chassis. A grounded system provides a ground path for protection against electrical shock. Grounding your drive modules and panels minimize the shock hazard to personnel and damage to equipment caused by short circuits, transient overvoltages, and accidental connection of energized conductors to the equipment chassis.

ATTENTION: The National Electrical Code contains grounding requirements, conventions, and definitions. Follow all applicable local codes and regulations to safely ground your system.
For CE grounding requirements, refer to Agency Compliance on page 37.

Ground the System Subpanel

Ground Kinetix 5700 power supplies, inverters, and accessory modules to a bonded cabinet ground bus with a braided of at least 10 mm^2 (0.0155 in^2) in cross-sectional area. Keep the braided ground strap as short as possible for optimum bonding.

Figure 83 - Connect the Ground Terminal

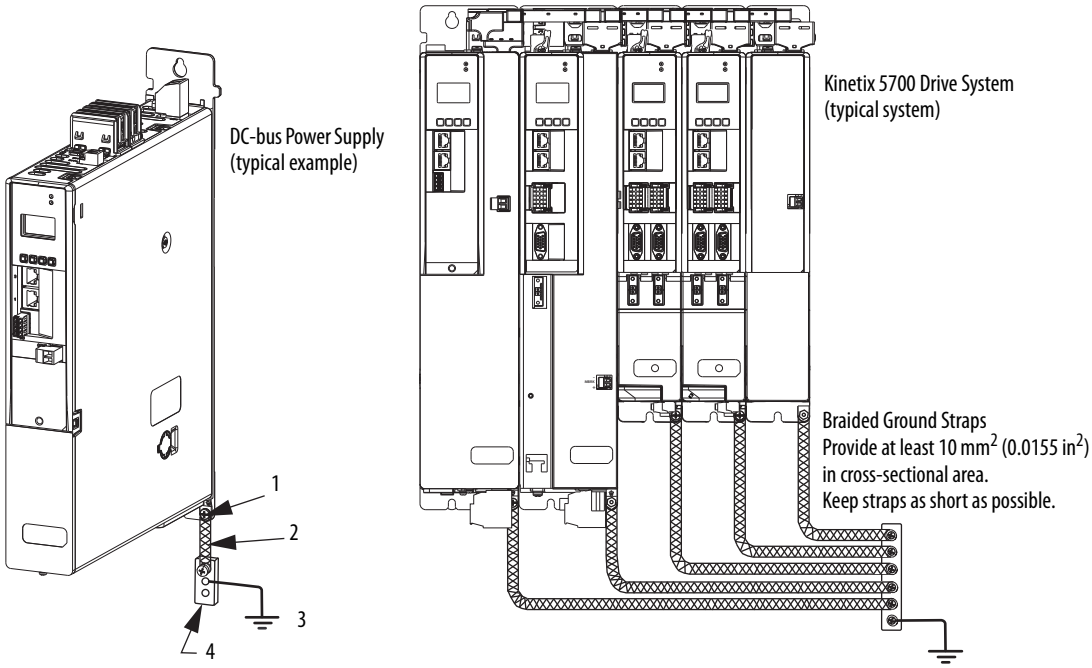

Item	Description
1	Ground screw (green) 2.0 N•m (17.7 lb•in), max
2	Braided ground strap (customer supplied)
3	Ground grid or power distribution ground
4	Bonded cabinet ground bus (customer supplied)

Refer to the System Design for Control of Electrical Noise Reference Manual, publication GMC-RM001, for more information.

Ground Multiple Subpanels

In this figure, the chassis ground is extended to multiple subpanels.

Figure 84 - Subpanels Connected to a Single Ground Point

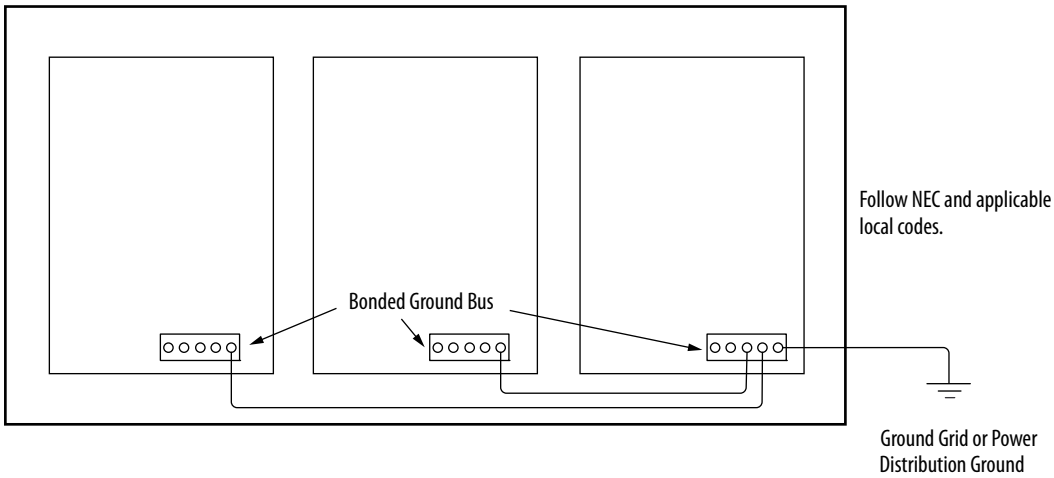

High-frequency (HF) bonding is not illustrated. For HF bonding information, refer to HF Bond for Multiple Subpanels on page 67.

Wiring Requirements

Wires must be copper with 75 °C (167 °F) minimum rating. Phasing of main AC power is arbitrary and earth ground connection is required for safe and proper operation.

Refer to Power Wiring Examples on page 343 for interconnect diagrams.

IMPORTANT The National Electrical Code and local electrical codes take precedence over the values and methods provided.

Table 69 - DC-bus Power Supply Wiring Requirements

DC-bus Power Supply Cat. No.	Description	Connects to Terminals		Wire Size	Strip Length	Torque Value
		Pin	Signal	mm ^{2} (AWG)	mm (in.)	N•m (lb•in)
2198-P031	Mains input power	⏚ L3 L2 L1	⏚ L3 L2 L1	6…10 (1) (10…8)	10.0 (0.39)	0.5…0.8 (4.4…7.1)
2198-P070				6…10 (2) (10…8)		
2198-P141 2198-P208				10…35 (8…2)	20.0 (0.79)	2.5…4.5 (22…40)
2198-P*xxx*	PELV/SELV 24V power (connector plug)	CP-1 CP-2	24V+ 24V–	0.5…4 (20…12)	7.0 (0.28)	0.22…0.25 (1.9…2.2)
	DC Bus power	Bus bar	DC– DC+	N/A (3)	N/A (3)	N/A (3)
	Contactor enable	EN– EN+	CONT EN– CONT EN+	0.14…2.5 (26…12)	7.0 (0.28)	0.4…0.5 (3.5…4.4)
	Shunt resistor	RC-1 RC-2	SH DC+	1.5…6 (16…10)	12.0 (0.47)	0.5…0.6 (4.5…5.3
	Digital inputs	IOD-1 IOD-2 IOD-3 IOD-4	IN1 COM IN2 SHLD	0.14…1.5 (26…16)	10.0 (0.39)	N/A (4)

(1) Applies to solid wire. If using stranded wire, the maximum wire size is 6 mm^2 (10 AWG).
(2) Applies to solid wire. If using stranded wire, the maximum wire size is 6 mm^2 (10 AWG). To meet CE requirements above 45 °C (113 °F) for 6 mm^2 stranded wires, single-core copper conductors must be used with 90 °C minimum rating.
(3) Shared DC-bus power connections are always made from one drive module to another over the bus-bar connection system. These terminals do not receive discrete wires.
(4) This connector uses spring tension to hold wires in place.

Table 70 - Regenerative Bus Supply Wiring Requirements

Regen Bus Supply Cat. No.	Description	Connects to Terminals		Wire Size mm 2 (AWG)	Strip Length mm (in.)	Torque Value N•m (lb•in)
		Pin	Signal			
2198-RP088	Mains input power	⏚ L3 L2 L1	⏚ L3 L2 L1	6…10 (1) (10…8)	10.0 (0.39)	0.5…0.8 (4.4…7.1)
2198-RP200				10…35 (8…2)	20.0 (0.79)	2.5…4.5 (22…40)
2198-RP263 2198-RP312				21.1…120 (4…250 kcmil)	27.0 (1.06)	15…20 (132…177)
2198-RP088 2198-RP200	PELV/SELV 24V power (connector plug)	CP-1 CP-2	24V+ 24V–	0.5…4 (20…12)	7.0 (0.28)	0.22…0.25 (1.9…2.2)
2198-RP263 2198-RP312				1.5…4 (16…12)	10.0 (0.39)	0.5…0.6 (4.4…5.3)
				6 (10)		0.7…0.8 (6.1…7.0)
2198-RP*xxx*	DC Bus power	Bus bar	DC– DC+	N/A (2)	N/A (3)	N/A (3)
	Contactor enable	OK+ OK– EN– EN+	CONV OK+ CONV OK– CONT EN– CONT EN+	0.14…2.5 (26…12)	7.0 (0.28)	0.4…0.5 (3.5…4.4)
	Active shunt	RC-2 RC-1	DC+ DC–	1.5…6 (16…10)	12.0 (0.47)	0.5…0.6 (4.5…5.3)
	Digital inputs	IOD-1 IOD-2 IOD-3 IOD-4 IOD-5 IOD-6 IOD-7 IOD-8 IOD-9 IOD-10	IN1 COM IN2 COM SHLD IN3 COM IN4 COM SHLD	0.14…1.5 (26…16)	10.0 (0.39)	N/A (3)

(1) Applies to solid wire. If using stranded wire, the maximum wire size is 6 mm^2 (10 AWG). To meet CE requirements above 40 °C (104 °F) for 6 mm^2 stranded wires, single-core copper conductors must be used with 90 °C minimum rating.
(2) Shared DC-bus power connections are always made from drive to drive over the bus-bar connection system. These terminals do not receive discrete wires.
(3) This connector uses spring tension to hold wires in place.

Table 71 - iTRAK Power Supply Wiring Requirements

iTRAK Power Supply Cat. No.	Description	Connects to Terminals		Wire Size mm^2 (AWG)	Strip Length mm (in.)	Torque Value N•m (lb•in)
		Pin	Signal			
2198T-W25K-ER	DC-bus input power	Bus bar	DC– DC+	N/A (1)	N/A (1)	N/A (1)
	SELV/PELV rated 24V power (connector plug)	CP-1 CP-2	24V+ 24V–	1.5…4 (2) (16…12)	10.0 (0.39)	0.5…0.6 (4.4…5.3)
				6 (10) (2)		0.7…0.8 (3) (6.1…7.0)

(1) Shared DC-bus power connections are always made from power supply to power supply over the bus-bar connection system. These terminals do not receive discrete wires.
(2) Use sufficient wire size to support the complete control power load, including the Kinetix 5700 drive modules and pass-through current for the attached motor modules.
(3) Depending on 24V current demand, 6 mm^2 (10 AWG) wire can be required. When 6 mm^2 (10 AWG) wire is used, these torque specifications apply.

TIP For iTRAK power supply wiring requirements not shown here, see iTRAK System with TriMax Bearings User Manual, publication 2198T-UM002, or iTRAK 5730 System User Manual, publication 2198T-UM003.

Table 72 - Single-axis Inverter Wiring Requirements

Single-axis Inverter Cat. No.	Description	Connects to Terminals		Wire Size mm ^{2} (AWG)	Strip Length mm (in.)	Torque Value N•m (lb•in)
		Pin	Signal			
2198-S086-ERS*x* 2198-S130-ERS*x*	Motor power	U V W ⏚	U V W ⏚	Motor power cable depends on motor/ drive combination. 6…25 (1) (10…4)	20.0 (0.79)	2.5…4.5 (22…40)
2198-S160-ERS*x*				10…35 (1) (8…2)		
2198-S263-ERS*x* 2198-S312-ERS*x*				21.1…120 (4…250 kcmil)	27.0 (1.06)	15…20 (132…177)
2198-S086-ERS*x* 2198-S130-ERS*x*	PELV/SELV 24V power (connector plug)	CP-1 CP-2	24V+ 24V-	0.5…4 (20…12)	7.0 (0.28)	0.22…0.25 (1.9…2.2)
2198-S263-ERS*x* 2198-S312-ERS*x*				1.5…4 (16…12)	10.0 (0.39)	0.5…0.6 (4.4…5.3)
				6 (10)		0.7…0.8 (6.1…7.0)
2198-S*xxx*-ERS*x*	Brake power	BC-1 BC-2	MBRK+ MBRK-	N/A (2)	7.0 (0.28)	0.22…0.25 (1.9…2.2)
	DC Bus power	Bus bar	DC- DC+	N/A (3)	N/A (3)	N/A (3)
	Safety	ST0-1 ST0-2 ST0-3 ST0-4 ST0-5 ST0-6 ST0-7 ST0-8 ST0-9 ST0-10 ST0-11 ST0-12 ST0-13 ST0-14 ST0-15 ST0-16	SB+/NC S1A SCA S2A SB- NC NC NC	0.14…1.5 (26…16)	10.0 (0.39)	N/A (4)
	Digital inputs	IOD-1 IOD-2 IOD-3 IOD-4 IOD-5 IOD-6 IOD-7 IOD-8 IOD-9 IOD-10	IN1 COM IN2 COM SHLD IN3 COM IN4 COM SHLD	0.14…1.5 (26…16)	10.0 (0.39)	N/A (4)

(1) Building your own single cables or using third-party single cables for Kinetix VP motors and actuators is not an option. Use 2090-CS*x*M1DE/DG single motor cables. Refer to the Kinetix Motion Accessories Specifications Technical Data, publication KNX-TD004, for cable specifications.

(2) Motor brake wires are included in the Bulletin 2090 motor cable.

(3) Shared DC-bus power connections are always made from one drive module to another over the bus-bar connection system. These terminals do not receive discrete wires.

(4) This connector uses spring tension to hold wires in place.

Table 73 - Dual-axis Inverter Wiring Requirements

Dual-axis Inverter Cat. No.	Description	Connects to Terminals		Wire Size mm ^{2} (AWG)	Strip Length mm (in.)	Torque Value N•m (lb•in)
		Pin	Signal			
2198-D006-ERS*x* 2198-D012-ERS*x* 2198-D020-ERS*x* 2198-D032-ERS*x*	Motor power (axis A and B)	U V W ⏚	U V W ⏚	Motor power cable depends on motor/ drive combination. 0.75…2.5 (1) (18…14)	10.0 (0.39)	0.5…0.6 (4.4…5.3)
2198-D057-ERS*x*				2.5…6 (1) (14…10)	10.0 (0.39)	0.5…0.8 (4.4…7.1)
2198-D*xxx*-ERS*x*	PELV/SELV 24V power (connector plug)	CP-1 CP-2	24V+ 24V–	0.5…4 (20…12)	7.0 (0.28)	0.22…0.25 (1.9…2.2)
	Brake power (axis A and B)	BC-1 BC-2	MBRK+ MBRK–	N/A (2)		
	DC Bus power	Bus bar	DC– DC+	N/A (3)	N/A (3)	N/A (3)
	Safety	ST0-1 ST0-2 ST0-3 ST0-4 ST0-5 ST0-6 ST0-7 ST0-8 ST0-9 ST0-10 ST0-11 ST0-12 ST0-13 ST0-14 ST0-15 ST0-16	SB+ /NC S1A SCA S2A SB- S1B SCB S2B	0.14…1.5 (26…16)	10.0 (0.39)	N/A (4)
	Digital inputs	IOD-1 IOD-2 IOD-3 IOD-4 IOD-5 IOD-6 IOD-7 IOD-8 IOD-9 IOD-10	IN1 COM IN2 COM SHLD IN3 COM IN4 COM SHLD	0.14…1.5 (26…16)	10.0 (0.39)	N/A (4)

(1) Building your own single cables or using third-party single cables for Kinetix VP motors and actuators is not an option. Use 2090-CS*x*M1DE/DG single motor cables. Refer to the Kinetix Motion Accessories Specifications Technical Data, publication KNX-TD004, for cable specifications.
(2) Motor brake wires are included in the Bulletin 2090 motor cable.
(3) Shared DC-bus power connections are always made from one drive module to another over the bus-bar connection system. These terminals do not receive discrete wires.
(4) This connector uses spring tension to hold wires in place.

ATTENTION: To avoid personal injury and/or equipment damage, observe the following:

- Make sure installation complies with specifications regarding wire types, conductor sizes, branch circuit protection, and disconnect devices. The National Electrical Code (NEC) and local codes outline provisions for safely installing electrical equipment.
- Use motor power connectors for connection purposes only. Do not use them to turn the motor on and off.
- Ground shielded power cables to prevent potentially high voltages on the shield.

Wiring Guidelines

Use these guidelines as a reference when wiring the power connectors on your Kinetix 5700 drive modules.

IMPORTANT For connector locations of the Kinetix 5700 drive modules, refer to Kinetix 5700 Connector Data on page 92.

When removing insulation from wires and tightening screws to secure the wires, refer to the table on page 136 for strip lengths and torque values.

IMPORTANT To improve system performance, run wires and cables in the wireways as established in Establish Noise Zones on page 68.

Follow these steps when wiring the connectors for your Kinetix 5700 drive modules.

1. Prepare the wires for attachment to each connector plug by removing insulation equal to the recommended strip length.

   Some cables come prepared with wires appropriately stripped.

   IMPORTANT Use caution not to nick, cut, or otherwise damage strands as you remove the insulation.

2. Route the cable/wires to your Kinetix 5700 drive module connector.
3. Insert wires into connector plugs.

   Refer to the connector pinout tables in Chapter 4 or the interconnect diagrams in Appendix A.
4. Tighten the connector screws.
5. Gently pull on each wire to make sure it does not come out of its terminal; reinsert and tighten any loose wires.
6. Insert the connector plug into the drive module connector.

Wire the Power Connectors

This section provides examples and guidelines to assist you in making connections to the input power connectors.

Refer to Power Wiring Examples on page 343 for interconnect diagrams.

Wire the 24V Control Power Input Connector

The 24V power (CP) connector requires 24V DC input for the control circuitry. The connector plug ships with the drive module and shared-bus connector kits are purchased separately.

IMPORTANT Mount the 24V power supply as close to the drive system as possible to minimize voltage drop on the 24V input power wiring.

Figure 85 - CP Connector Wiring - Connector Plug

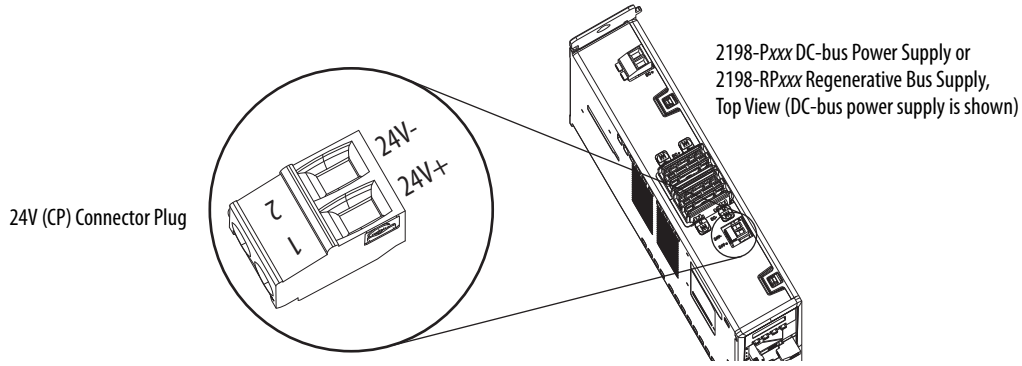

Table 74 - CP Connector Plug Wiring Specifications

Drive Module Cat. No.	CP Pin	Signal	Recommended Wire Size mm^2 (AWG)	Strip Length mm (in.)	Torque Value N•m (lb•in)
2198-P*xxx*, 2198-RP088, 2198-RP200, 2198-D*xxx*-ERS*x*, 2198-S086-ERS*x*, 2198-S130-ERS*x*, 2198-S160-ERS*x*, 2198-CAPMOD-2240 and 2198-DCBUSCOND-RP312	CP-1 CP-2	24V+ 24V-	0.5…4 (1) (20…12)	7.0 (0.28)	0.22…0.25 (1.9…2.2)
2198-RP263, 2198-RP312, 2198-S263-ERS*x*, 2198-S312-ERS*x*, 2198T-W25K-ER	CP-1 CP-2	24V+ 24V-	1.5…4 (1) (16…12)	10.0 (0.39)	0.5…0.6 (4.4…5.3)
			6 (10)		0.7…0.8 (6.1…7.0)

(1) Use sufficient wire size to support the complete control power load, including the Kinetix 5700 drive modules and pass-through current for the attached motor modules. See 24V Control Power Evaluation on page 47 for more information.

Figure 86 - CP Connector Wiring - Shared Bus

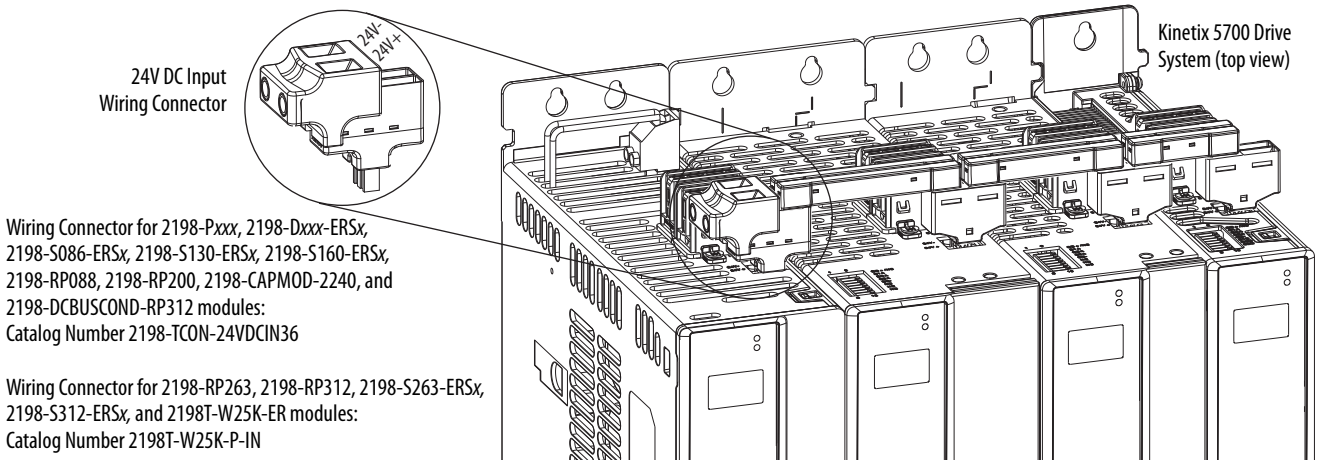

Table 75 - CP Shared-bus Wiring Specifications

Drive Module (1) (2) Cat. No.	CP Pin	Signal	Input Current, max A rms	Recommended Wire Size mm^2 (AWG)	Strip Length mm (in.)	Torque Value N•m (lb•in)
2198-RP*xxx* and 2198-P*xxx* 2198-D*xxx*-ERS*x*, 2198-S*xxx*-ERS*x*, 2198-CAPMOD-2240, 2198-DCBUSCOND-RP312, 2198T-W25K-ER	CP-1 CP-2	24V+ 24V-	40	10 (6)	11.0 (0.43)	1.7…1.8 (15.0…15.9)

(1) Catalog numbers 2198T-W25K-ER, 2198-RP263, 2198-RP312, 2198-S263-ERS*x*, and 2198-S312-ERS*x*, use a slightly larger input wiring connector than the other Kinetix 5700 drive modules.
(2) Bus-bars and T-connectors can be added only to the right of the 24V DC input wiring connector.

Wire the Input Power Connector

The input power (IPD) connector applies to the 2198-P*xxx* DC-bus power supply and 2198-RP*xxx* regenerative bus supply.

ATTENTION: Make sure the input power connections are correct when wiring the IPD connector plug. Insert the plug into the module connector and tighten screws to the specified torque value. Incorrect wiring/polarity or loose wiring can cause damage to equipment.

Figure 87 - IPD Connector Wiring

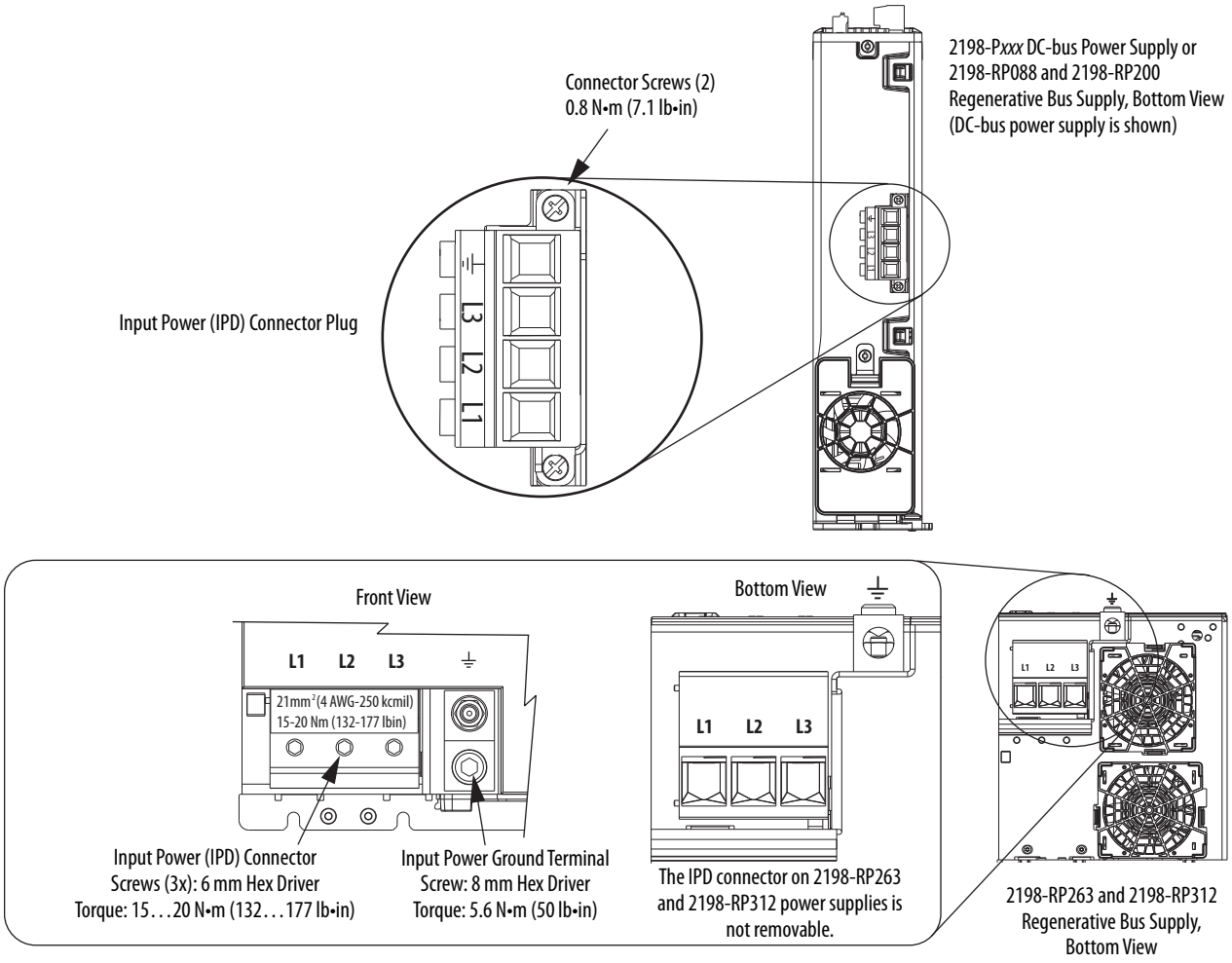

Table 76 - Input Power (IPD) Connector Specifications

Regenerative Bus Supply Cat. No.	DC-bus Power Supply Cat. No.	Pin	Signal	Recommended Wire Size mm^2 (AWG)	Strip Length mm (in.)	Torque Value N•m (lb•in)
2198-RP088	2198-P031 2198-P070	⏚ L3 L2 L1	⏚ L3 L2 L1	6…10 (10…8)	10.0 (0.39)	0.8 (7.1)
2198-RP200	2198-P141 2198-P208			10…35 (8…2)	20.0 (0.79)	
2198-RP263 2198-RP312	–			21.1…120 (4…250 kcmil)	27.0 (1.06)	15…20 (132…177)

Wire the Contactor Enable Connector

The contactor enable (2-pin CED) connector applies to the DC-bus power supply. The regenerative bus supply has a 4-pin CED connector and includes wiring to the Converter OK relay.

ATTENTION: Wiring the contactor enable relay is required. To avoid personal injury or damage to the Kinetix 5700 drive system, wire the contactor enable relay into your control string so that:

- three-phase power is removed and the DC-bus power supply or regenerative bus supply is protected under various fault conditions.
- three-phase power is never applied to the Kinetix 5700 drive system before control power is applied.

Figure 88 - CED Connector Wiring - Connector Plug

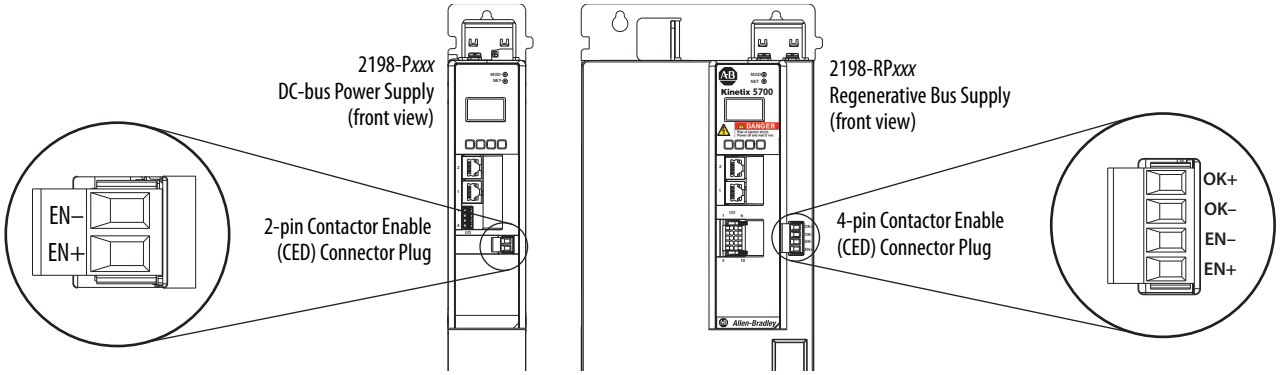

Table 77 - CED Connector Plug Specifications

Regenerative Bus Supply Cat. No.	DC-bus Power Supply Cat. No.	Pin	Signal	Recommended Wire Size mm^2 (AWG)	Strip Length mm (in.)	Torque Value N•m (lb•in)
2198-RP088 2198-RP200 2198-RP263 2198-RP312	2198-P031 2198-P070 2198-P141 2198-P208	EN– EN+	CONT EN– CONT EN+	0.14…2.5 (26…12)	7.0 (0.28)	0.4…0.5 (3.5…4.4)
	–	OK+ OK–	CONV OK+ CONV OK–			

Wire the Digital Input Connectors

This section provides guidelines to assist you in making digital input connections. The digital inputs (IOD) and safety (STO) connector plugs for all 2198-*xxxx*-ERS3 and 2198-*xxxx*-ERS4 drives require special attention to help keep the plugs seated properly during normal operation.

IMPORTANT When replacing 2198-*xxxx*-ERS3 (series A) single-axis and dual-axis inverters with 2198-*xxxx*-ERS*x* (series B) inverters, you must use the series B (safety and digital input) connector plugs that are included with your series B inverter.

2198-*xxxx*-ERS3 (series A) Connector Plugs

The right side of the safety and digital-input connector plugs require an off-center push when inserting them into their respective connectors. This applies to 2198-*xxxx*-ERS3 (series A) single-axis and dual-axis inverters.

IMPORTANT An off-center push is required to engage the locking features on the bottom of the safety and digital-input connector plugs and seat properly with the drive (STO and IOD) connectors. Failure to do this can result in the connector plugs pulling out of the drive connector during normal operation.

Figure 89 - 2198-*xxxx*-ERS3 (series A) Connector Plugs

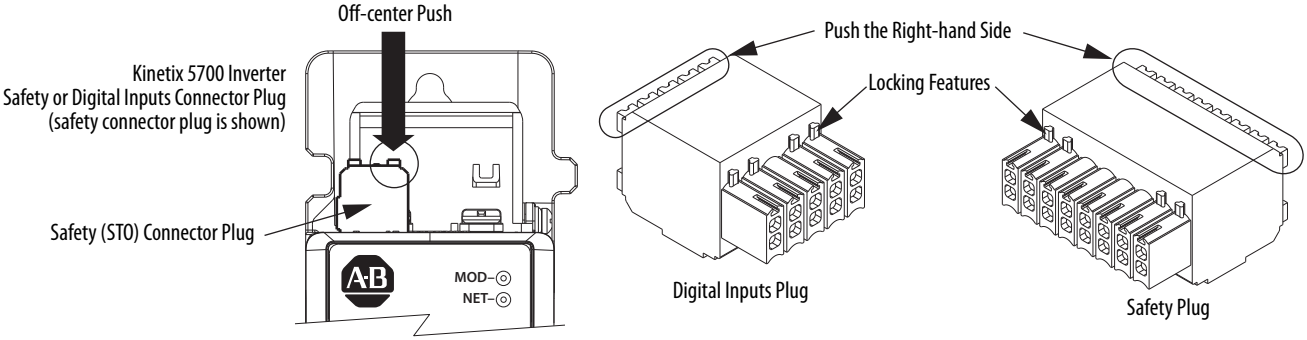

2198-*xxxx*-ERS4 and 2198-*xxxx*-ERS3 (series B) Connector Plugs

The safety and digital-input connector plugs have two locking leavers that you push in a clockwise direction as you insert the plugs into the drive connector. This is the locked position. Rotate the leavers counter-clockwise (open position) to release the connector plugs. This applies to 2198-RP*xxx* regenerative bus supply and 2198-*xxxx*-ERS4 and 2198-*xxxx*-ERS3 (series B) single-axis and dual-axis inverters.

IMPORTANT Push the locking leavers clockwise into the locked position as you insert the (STO and IOD) connector plugs. Failure to do this can result in the connector plugs pulling out of the drive connector during normal operation.

Figure 90 - 2198-*xxxx*-ERS4 and 2198-*xxxx*-ERS3 (series B) Connector Plugs

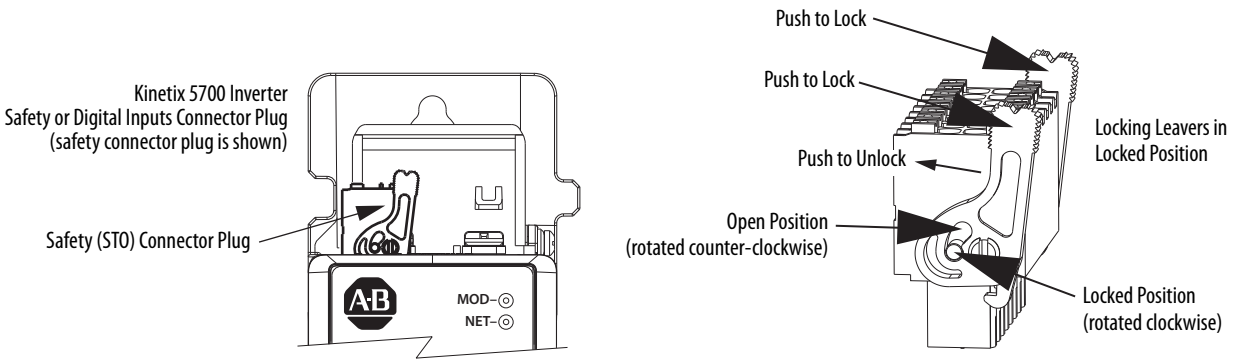

Wire the Safe Torque-off Connector

For the hardwired safe torque-off (STO) connector pinouts, feature descriptions, and wiring information, refer to Chapter 9 beginning on page 303.

Wire the Digital Inputs Connector

The digital inputs (IOD) connector applies to the DC-bus power supply, 2198-RP*xxx* regenerative bus supply, single-axis inverter, and dual-axis inverters and use spring tension to hold wires in place.

Figure 91 - IOD Connector Wiring

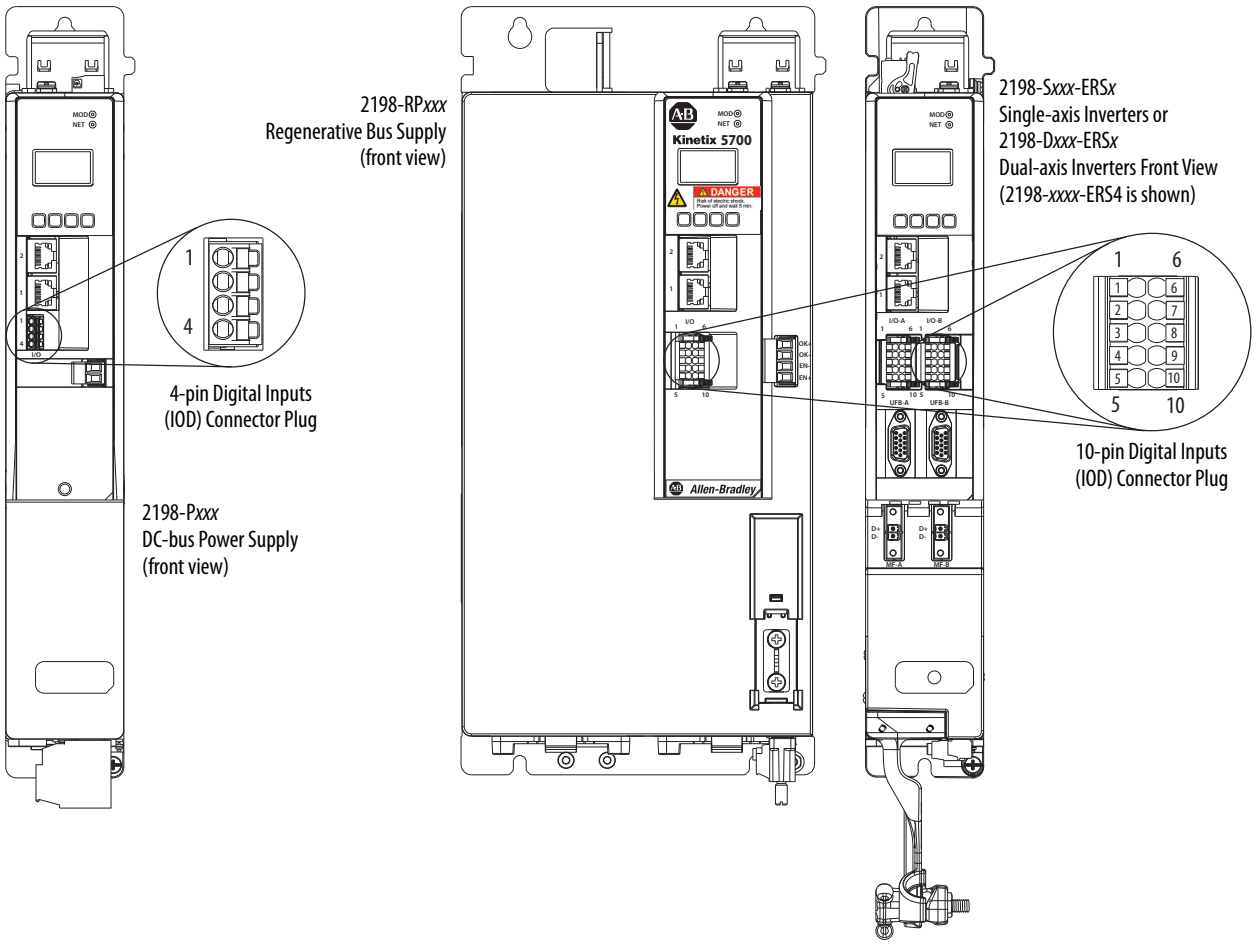

Table 78 - Digital Inputs (IOD) Connector Specifications

Drive Module Cat. No.	IOD Pin	Signal	Recommended Wire Size mm^2 (AWG)	Strip Length mm (in.)	Torque Value N•m (lb•in)
2198-P*xxx*	IOD-1 IOD-2 IOD-3 IOD-4	IN1 COM IN2 SHLD	0.14…1.5 (26…16)	10.0 (0.39)	N/A (1)
2198-RP*xxx* 2198-D*xxx*-ERS*x* 2198-S*xxx*-ERS*x*	IOD-1 IOD-2 IOD-3 IOD-4 IOD-5 IOD-6 IOD-7 IOD-8 IOD-9 IOD-10	IN1 COM IN2 COM SHLD IN3 COM IN4 COM SHLD	0.14…1.5 (26…16)	10.0 (0.39)	N/A (1)

(1) This connector uses spring tension to hold wires in place.

Wire Motor Power and Brake Connectors

Motor power connections are made at the MP connector on the bottom of the dual-axis and single-axis inverters. Motor brake connections are made at the BC connector. On dual-axis inverters, the BC connectors are on either side of the MP connectors on the bottom of the drive. On single-axis inverters, the BC connector is on the front of the drive.

- On 2198-S086-ERS*x,* 2198-S130-ERS*x*, and 2198-S160-ERS*x* single-axis inverters, the motor power connector and shield clamp are mounted to a separate bracket that plugs into the bottom of the drive and has mounting screws to hold it secure.

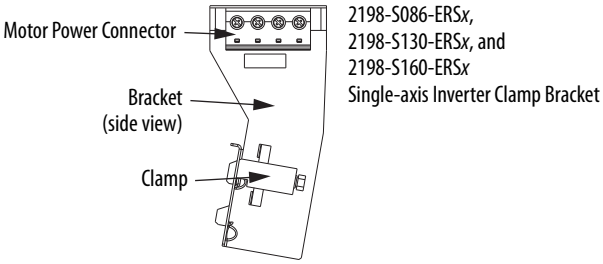

- On 2198-S263-ERS*x* and 2198-S312-ERS*x* single-axis inverters, the motor power connector is part of the drive. The clamp bracket is included with the drive, but requires some assembly.

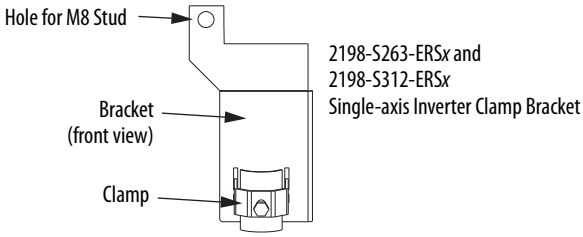

IMPORTANT The clamp included with 2198-S263-ERS*x* and 2198-S312-ERS*x* inverters is compatible with Bulletin 2090 (4 and 2 AWG) motor power cable. Do not use the clamp for smaller or larger cables.

Figure 92 - MP and BC Connector Wiring (dual-axis inverters)

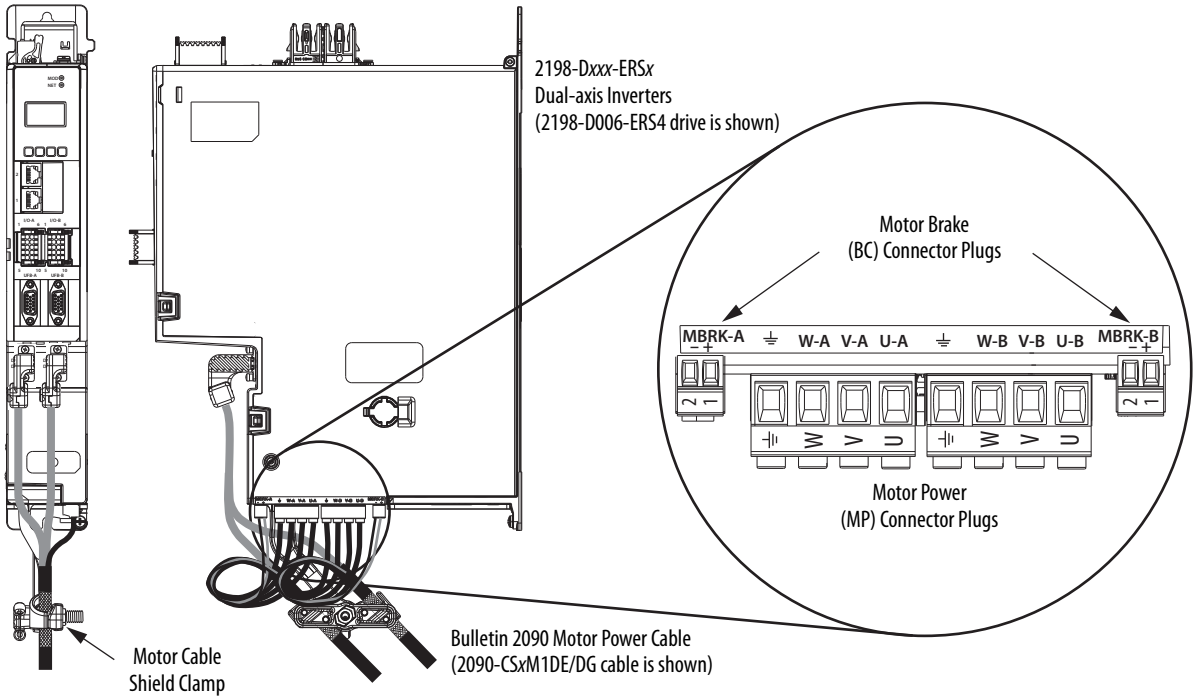

ATTENTION: Make sure the motor power connections are correct when wiring the MP connector plug and that the plug is fully engaged in the module connector. Incorrect wiring/polarity or loose wiring can cause damage to equipment.

Table 79 - Motor Power (MP) Connector Specifications (dual-axis inverters)

Dual-axis Inverter Cat. No.	Pin	Signal/Wire Color	Recommended Wire Size mm^2 (AWG)	Strip Length mm (in.)	Torque Value N•m (lb•in)
2198-D006-ERS*x* 2198-D012-ERS*x* 2198-D020-ERS*x* 2198-D032-ERS*x*	U V W ⏚	U Brown V Black W Blue ⏚ Green/Yellow	Motor power cable depends on motor/ drive combination. 0.75…2.5 (1) (18…14)	10.0 (0.39)	0.5…0.6 (4.4…5.3)
2198-D057-ERS*x*			2.5…6 (1) (14…10)	10.0 (0.39)	0.5…0.8 (4.4…7.1)

(1) Building your own single cables or using third-party single cables with Kinetix VP motors and actuators is not an option. Use 2090-CSxM1DE/DG single motor cables. Refer to the Kinetix Motion Accessories Specifications Technical Data, publication KNX-TD004, for cable specifications.

Table 80 - Motor Brake (BC) Connector Specifications

Drive Module Cat. No.	Pin	Signal/ Wire Color	Recommended Wire Size (AWG)	Strip Length mm (in.)	Torque Value N•m (lb•in)
2198-D*xxx*-ERS*x* 2198-S*xxx*-ERS*x*	BC-1	MBRK+/Black	N/A (1)	7.0 (0.28)	0.22…0.25 (1.9…2.2)
	BC-2	MBRK-/White			

(1) Motor brake wires are part of the Bulletin 2090 motor power cable.

Figure 93 - MP and BC Connector Wiring (single-axis inverters)

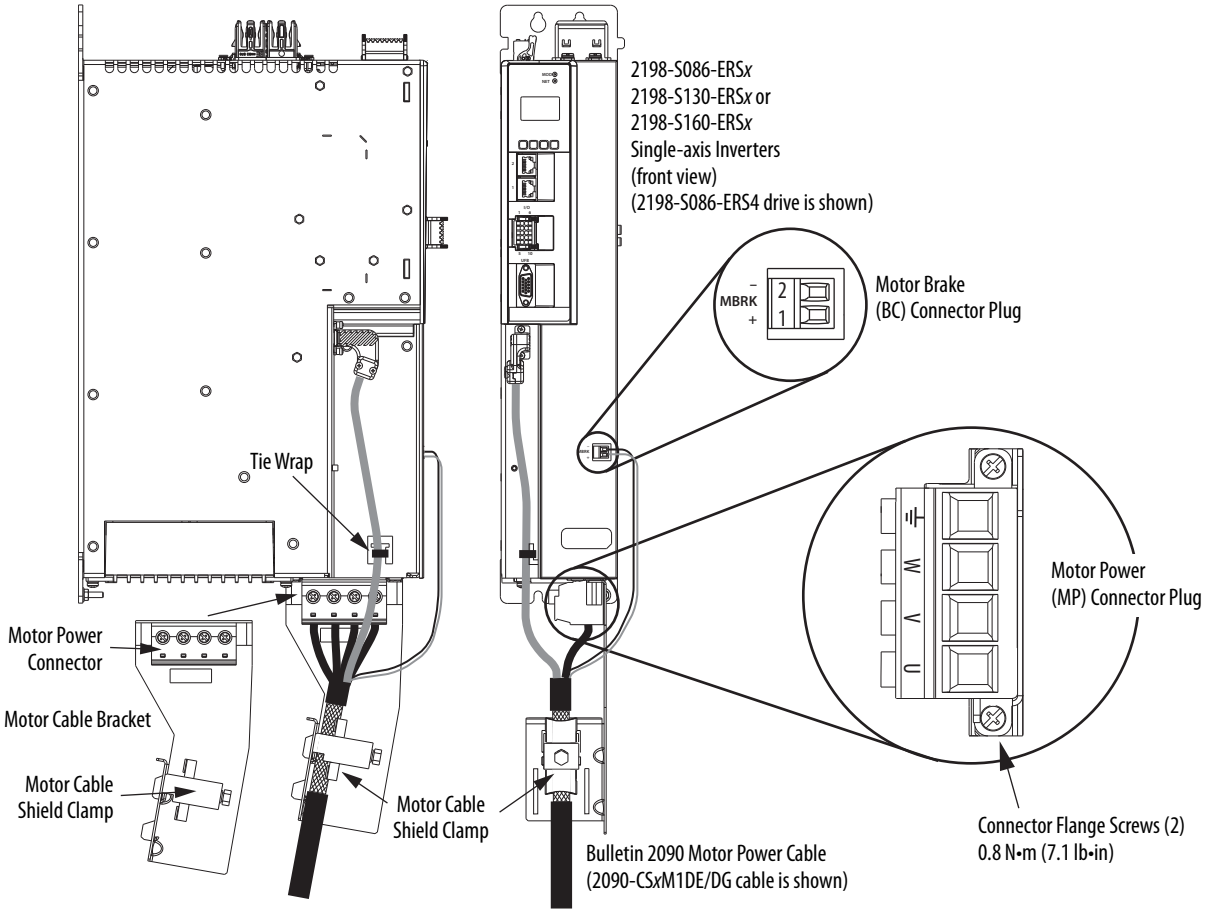

Attach the motor power wires to the motor power connector, plug in the motor feedback and brake connectors, and then connect the bracket to the drive.

ATTENTION: Make sure the motor power connections are correct when wiring the MP connector plug. Insert the plug into the module connector and tighten flange screws to 0.8 N•m (7.1 lb•in). Incorrect wiring/polarity or loose wiring can cause damage to equipment.

Table 81 - Motor Power (MP) Connector Specifications (single-axis inverters)

Drive Module Cat. No.	Pin	Signal/Wire Color	Recommended Wire Size mm^2 (AWG)	Strip Length mm (in.)	Terminal Torque Value N•m (lb•in)	Flange Torque Value, max N•m (lb•in)
2198-S086-ERSx 2198-S130-ERSx	U V W ⏚	U Brown V Black W Blue ⏚ Green/Yellow	Motor power cable depends on motor/ drive combination. 6…16 (1) (10…6)	20.0 (0.79)	2.5…4.5 (22…40)	0.8 (7.1)
2198-S160-ERSx			10…35 (8…2)			

(1) Building your own single cables or using third-party single cables for Kinetix VP motors and actuators is not an option. Use 2090-CSxM1DE/DG single motor cables. Refer to the Kinetix Motion Accessories Specifications Technical Data, publication KNX-TD004, for cable specifications.

Figure 94 - MP and BC Connector Wiring (single-axis inverters)

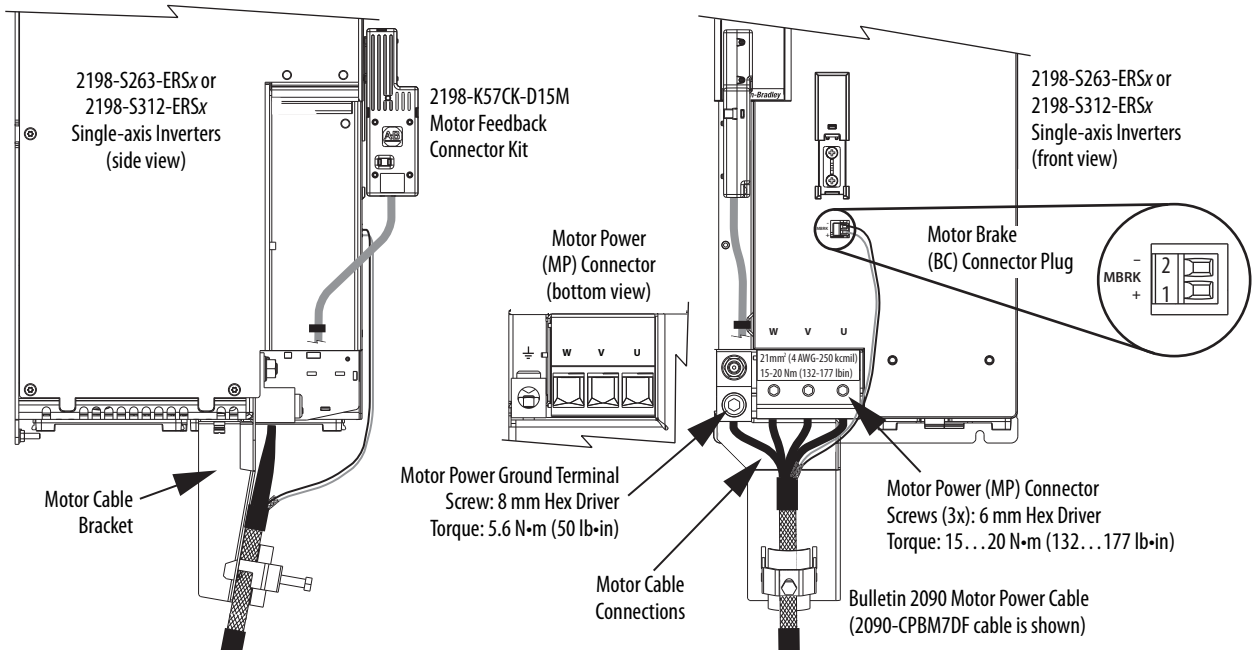

Install the motor cable bracket (see page page 165), then attach motor power and ground wires to the motor power connector and ground terminal. Plug in motor feedback and brake connectors.

Table 82 - Motor Power and Brake Connector Specifications (single-axis inverters)

Drive Module Cat. No.	Pin	Signal/Wire Color	Recommended Wire Size mm² (AWG)	Strip Length mm (in.)	Terminal Torque Value N•m (lb•in)
2198-S263-ERSx 2198-S312-ERSx	U V W ⏚	U Brown V Black W Blue ⏚ Green/Yellow	21.1…120 (4…250 kcmil)	27.0 (1.06)	15…20 (132…177)

Maximum Cable Lengths

There are maximum cable length limitations that apply to the DC-bus cables (cluster to cluster) and motor power/brake and feedback cables (drive to motor).

DC Bus Cluster-to-Cluster Cable Lengths

In this example, the power supply (center) feeds two extended clusters. The following DC-bus cable length limitations apply:

- The maximum DC-bus cable length (power supply cluster to extended cluster) is 70 m (230 ft)
- The maximum total DC-bus cable length is 140 m (459 ft)

IMPORTANT These examples feature the 2198-RP*xxx* regenerative bus supply, however, they also apply to the 2198-P*xxx* DC-bus power supply.

Figure 95 - Regenerative Bus Supply Example/Center Power Supply Cluster/104 A, max

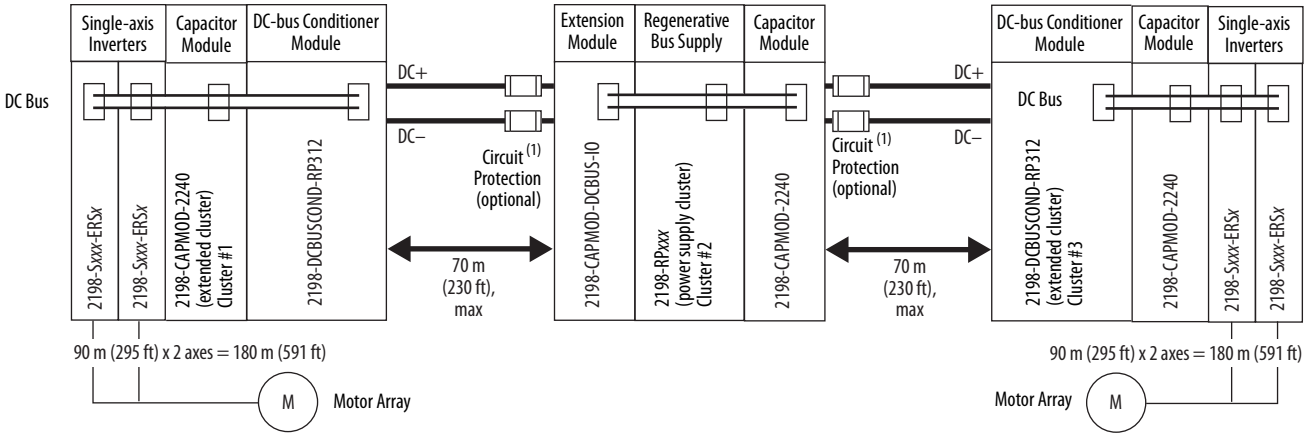

(1) The National Electrical Code and local electrical codes take precedence over the values and methods provided.

When the power supply is positioned right or left of the extended clusters, the maximum total DC-bus cable length is 70 m (230 ft).

Figure 96 - Regenerative Bus Supply Example/Two Extended Clusters/208 A, max

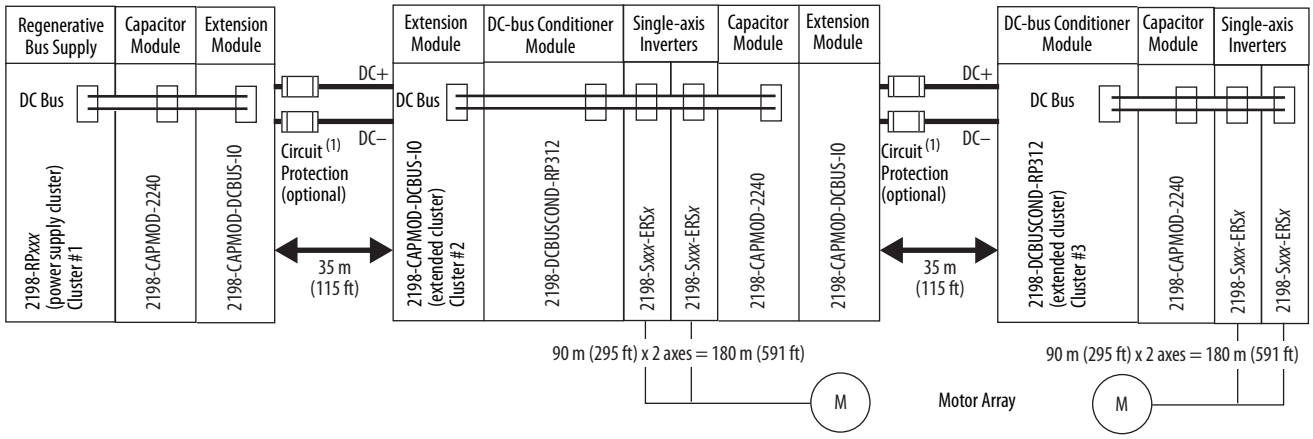

(1) The National Electrical Code and local electrical codes take precedence over the values and methods provided.

IMPORTANT It is important to use low-inductance DC cable routing to help reduce the risk of voltage oscillations between clusters.

Low-inductance DC cable routing can be achieved by means of positive and negative cables routed in parallel and as close to one another as possible, less than 0.3 m (1.0 ft).

Size the DC cable in accordance with UL or applicable agency guidelines. The voltage drop across the DC cable can be further reduced by using a bigger cable size because voltage drop is directly proportional to cable resistance (see Recommended DC-bus Cable Gauge on page 152).

Table 83 - Recommended DC-bus Cable Gauge

Regenerative Bus Supply Cat. No.	Recommended DC-bus Cable Gauge mm^2 (AWG/MCM)
2198-RP088	53.5 (1/0)
2198-RP200	
2198-RP263	152 (300 MCM)
2198-RP312	
DC-bus Power Supply Cat. No.	**Recommended DC-bus Cable Gauge mm^2 (AWG/MCM)**
2198-P031	53.5 (1/0)
2198-P070	
2198-P141	
2198-P208	
2198-P208 x 2	152 (300 MCM)
2198-P208 x 3	

Observe the following guidelines when installing DC-bus cable:

- Use only unshielded cable for DC-bus voltage
- Use 1000V rated insulation cable in this application
- Make the DC+ and DC- cable distance as short as possible to help reduce cable inductance
- Twisting the DC-bus cable together is not required, but we recommend twisting to make sure the DC cables are routed close to each other
- The maximum Bus Voltage Set Point reduces linearly from 750V DC to 715V DC as the DC-bus cable length per cluster increases from 0 to 70 m (230 ft) respectively
- To prevent nuisance bus-overvoltage faults, the maximum Bus Voltage Set Point reduces linearly from 750V DC to 715V DC as the DC-bus cable length per cluster increases from 0 to 70 m (230 ft) respectively.

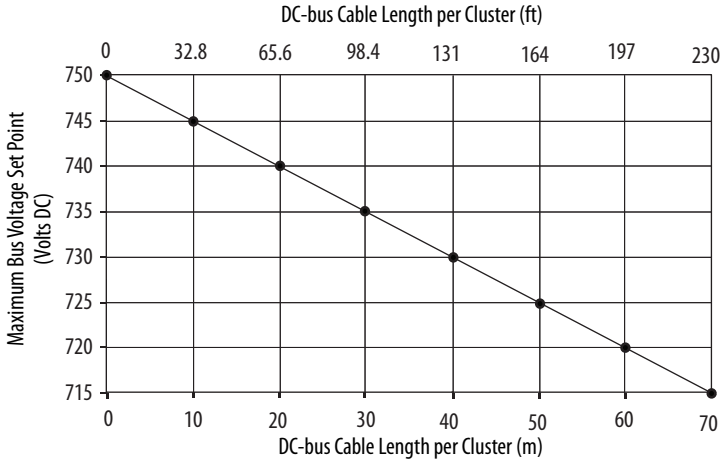

Drive to Motor Cable Lengths

Combined motor-power cable length for all axes on the same DC bus depends on the Kinetix 5700 system power supply in use.

- For applications that include the 2198-P*xxx* DC-bus power supply and 2198-DB*xx*-F AC line filter, the maximum length is up to 400 m (1312 ft)
  - When 2198-P070, 2198-P141, and 2198-P208 DC-bus power supplies are used with 2198-DBR*xx*-F AC line filters, the maximum length is up to 1200 m (3937 ft)
  - When 2198-P031 DC-bus power supplies are used with 2198-DB*xx*-F or 2198-DBR*xx*-F line filters, the maximum length is up to 400 m (1312 ft)
- For applications that include the 2198-RP*xxx* regenerative bus supply and 2198-DBR*xx*-F AC line filter, the maximum length is up to 1200 m (3937 ft)

The maximum drive-to-motor cable length for Kinetix 5700 drives and motor/actuator combinations with 2090-CSxM1Dx cables is up to 90 m (295 ft), depending on the feedback type and overall system design.

Table 84 - Drive-to-Motor Feedback Cable Length

Feedback Type	**Cable Length, max** (1) m (ft)
Single-turn or multi-turn absolute	up to 90 (295)
Incremental	up to 30 (98)
EnDat	up to 90 (295)

(1) See Appendix D on page 405 for the maximum motor-to-drive cable length for specific motor and actuator families.

IMPORTANT For more information on maximum motor cable lengths, see Appendix D beginning on page 405.

This cable length example is based on the Kinetix 5700 system in Figure 95 on page 151.

Table 85 - Combined Cable Length Example

Cluster	**Total Motor Power Cable Length** m (ft)	**Total DC-bus Cable Length** m (ft)
Extended Cluster #1	180 (591)	70 (230)
Power Supply Cluster #2	–	–
Extended Cluster #3	180 (591)	70 (230)
Total	360 (1182)	140 (460)

Connect Single Cables

Kinetix 5700 inverters and Kinetix VPL, VPC-Q, VPF, VPH, VPS servo motors and Kinetix VPAR electric cylinder combinations use single motor-cable technology with motor power, feedback, and brake wires (when specified) housed in a single cable. Feedback wires are shielded separately and provide a shield braid for grounding in the connector kit.

IMPORTANT Due to the unique characteristics of single cable technology, designed for and tested with Kinetix 5700 inverters and Kinetix VP motors and actuators, you cannot build your own single cables or use third-party single cables.

Refer to the Kinetix Motion Accessories Specifications Technical Data, publication KNX-TD004, for cable specifications.

Table 86 - Single Cable Catalog Numbers

Motor /Actuator Cat. No.	Feedback Kit Cat. No.	Motor Cable Cat. No. (with brake wires)	Motor Cable Cat. No. (without brake wires)	Feedback Connections
VPL-A/B*xxxx* VPF-A/B*xxxx* VPH-A/B*xxxx* VPS-B*xxxxx* VPC-B*xxxxx*-Q VPAR-B*xxxxx*	2198-KITCON-DSL	2090-CSBM1DE-*xxx*A*xx* (standard) cables 2090-CSBM1DE-*xxx*F*xx* (continuous-flex) cables	2090-CSWM1DE-*xxx*A*xx* (standard) cables	2198-KITCON-DSL kit is pre-wired to feedback conductors
		2090-CSBM1DG-*xxx*A*xx* (standard) cables 2090-CSBM1DG-*xxx*F*xx* (continuous-flex) cables	2090-CSWM1DG-*xxx*A*xx* (standard) cables	Flying-lead feedback conductors. 2198-KITCON-DSL connector kit is purchased separately

Table 87 - Kinetix VPL, VPF, VPH, VPS, VPC-Q, and VPAR Motor/Actuator Compatibility

Drive Module (1) Cat. No.	Kinetix VPL	Kinetix VPF	Kinetix VPH	Kinetix VPS	VPC-B*xxxxx*-Q (2)	Kinetix VPAR
2198-D*xxx*-ERS*x*	X	X	X	X	X	X
2198-S*xxx*-ERS*x*	–	–	–	–		–

(1) For wiring to compatible motors with 2198-S160-ERS*x* drives, see Single-axis Inverter Power/Brake Cable Installation on page 163.
For wiring to compatible motors with 2198-S263-ERS*x*, 2198-S312-ERS*x* drives, see Customer-supplied Motor Power Cables on page 173.

(2) Due to the motor power conductor size, VPC-B3004 motors do not support single cable technology. See the Motor Power Cable Compatibility table on page 158 for VPC-B*xxxxx*-S, VPC-B3004*x*-M, and VPC-B*xxxxx*-Y motor cables intended for use with Kinetix 5700 drives.

Motor Feedback Connections

ATTENTION: When routing 2090-CS*x*M1DE cables through tight spaces, we recommend removing the 2198-KITCON-DSL feedback connector kit to avoid causing damage to the kit.

Single motor-cable feedback connections are made by using the 2198-KITCON-DSL feedback connector kit.

- 2090-CS*x*M1DE cables include the connector kit pre-wired to the feedback conductors.
- 2090-CS*x*M1DG cables have flying-lead feedback conductors. The 2198-KITCON-DSL feedback connector kit must be purchased separately and installed.

Figure 97 - MF Connector Wiring Example

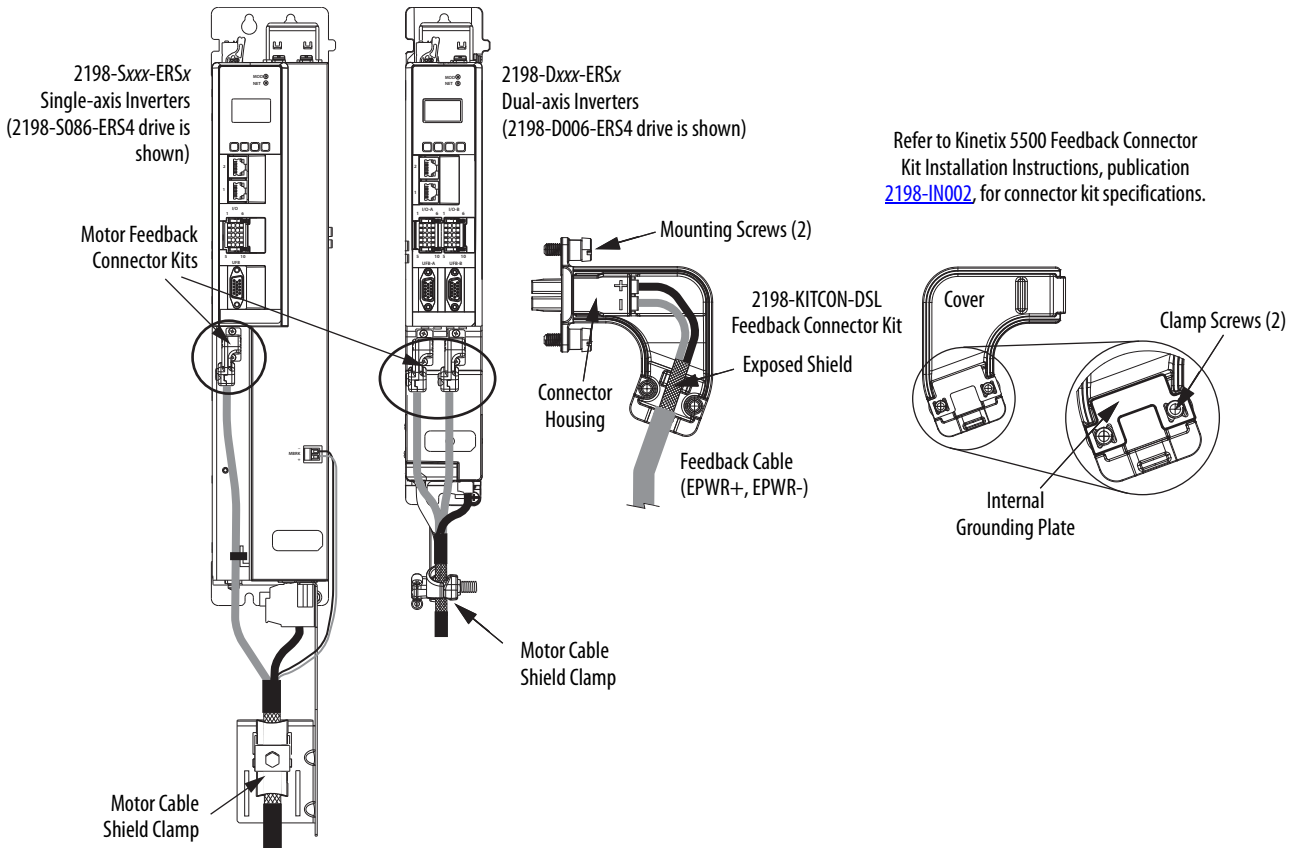

Table 88 - Motor Feedback (MF) Connector Specifications

Drive Module Cat. No.	Pin	Signal/ Wire Color	Wire Size AWG	Strip Length mm (in.)	Torque Value N•m (lb•in)
2198-D*xxx*-ERS*x* 2198-S*xxx*-ERS*x*	MF-1	D+/Blue	22	10.0 (0.39)	0.4 (3.5)
	MF-2	D-/White/Blue			

Apply the Single Motor Cable Shield Clamp

Factory-supplied 2090-Series single motor cables are shielded, and the braided cable shield must terminate at the drive during installation. A small portion of the cable jacket has been removed to expose the shield braid. The exposed area must be clamped (with the clamp provided) at the bottom front of the drive.

SHOCK HAZARD: To avoid hazard of electrical shock, make sure shielded power cables are grounded according to recommendations.

These procedures assume you have completed wiring your motor power, brake, and feedback connectors and are ready to apply the cable shield clamp.

Dual-axis Inverter Shield Clamp Installation

Follow these steps to apply the dual-axis inverter cable shield clamp.

1. Loosen the clamp knob and determine if you need the clamp spacers.

   Clamp spacers are included with the dual-axis inverters for cable diameters that are too small for a tight fit within the drive clamp alone.

   The spacers are held captive by nylon rivets. Remove the rivets and spacers when your cable shield is of sufficient diameter for the clamp to hold the cable secure.

   IMPORTANT Use clamp spaces (supplied with drive) when the cable shield diameter is too small for a tight fit within the shield clamp. Remove the clamp spacers when not needed.

Figure 98 - Dual-axis Inverter Shield Clamp Installation

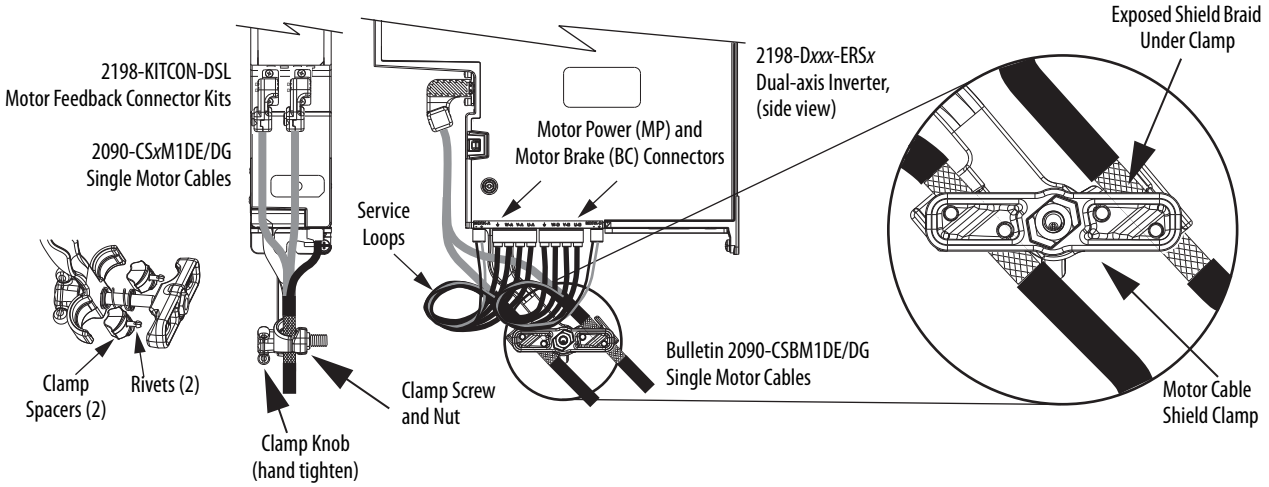

2. Position the exposed portion of each cable braid directly in line with the clamp.
3. Hand tighten the clamp knob.

Make sure the cable clamp tightens around the cable shield and provides a good bond between the cable shield and the drive chassis.

Only finger-tight torque on the clamp knob is required. The cable should not move within the clamp under its own weight or when slight pressure is applied by hand.

IMPORTANT If the power/brake cable shield on the dual-axis inverter has a loose fit inside the shield clamp, use a clamp spacer to reduce the clamp diameter. When the clamp knob is tightened, the result must be a high-frequency bond between the cable shield and the drive chassis.

Make sure the clamp is aligned with the shield braid and not heat shrink.

4. Repeat step 1 through step 3 for each dual-axis inverter.

Single-axis Inverter Shield Clamp Installation

Single-axis inverters include a two-position cable-shield clamp. Use which ever clamp holds your cable shield firmly. Replacement clamps are available.

Follow these steps to apply the single-axis inverter motor-cable shield clamp.

1. Remove the larger (lower position) clamp.
2. Loosen the clamp screw.

Figure 99 - Cable Installation Example

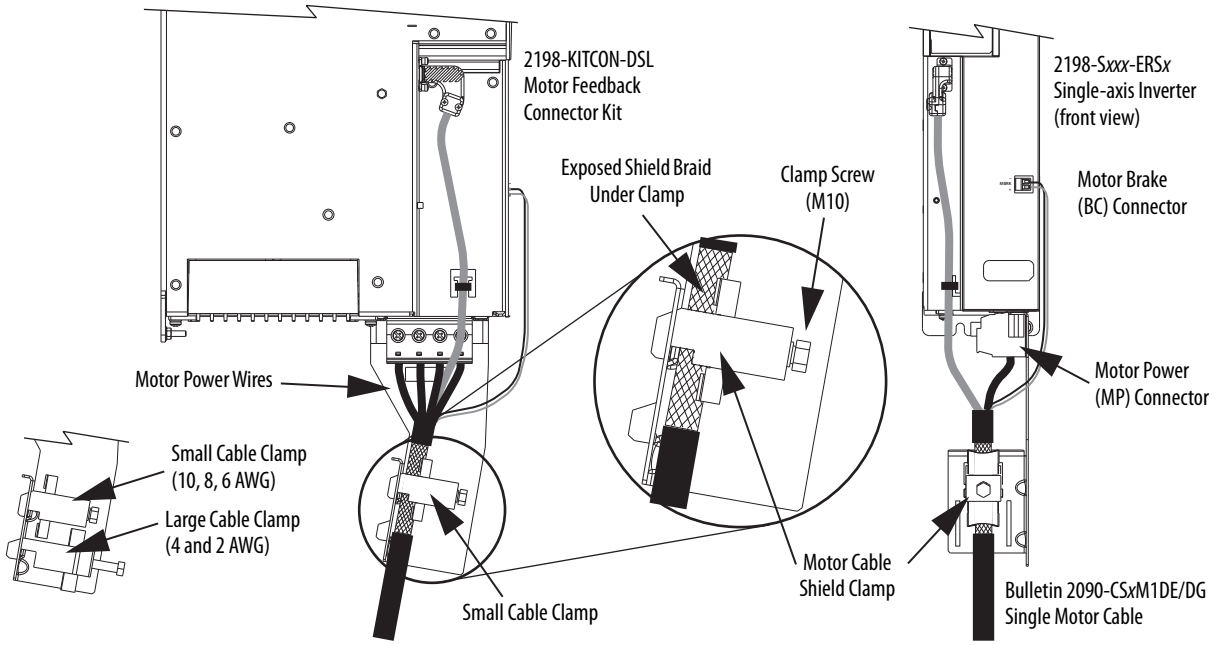

3. Position the exposed portion of the cable braid directly in line with the clamp.

IMPORTANT Make sure the clamp is aligned with the shield braid and not the heat shrink.

4. Tighten the clamp screw.

   Make sure the cable clamp tightens around the overall cable shield and provides a good bond between the cable shield and the drive chassis.

   Torque value 5.6 N•m (50 lb•in), max.

5. Repeat step 1 through step 4 for each drive in multi-axis configurations.

Connect Power/Brake and Feedback Cables

Kinetix 5700 drives are also compatible with many other Allen-Bradley® motors and actuators that have separate power/brake and feedback cables. Follow these guidelines when 2090-CP*x*M7DF (power/brake) cables and 2090-CFBM7DF (feedback) cables are used in a new installation or reused in an existing installation with Kinetix 5700 servo drives.

Motor Power and Brake Cables

The motors and actuators in Table 89 have separate power/brake and feedback cables. The motor power/brake cable attaches to the cable clamp on the drive and the power/brake conductors attach to the MP and BC connectors, respectively.

Table 89 - Motor Power Cable Compatibility

Motor/Actuator Cat. No.	Motor Power Cables (1) (with brake wires)	Motor Power Cables (1) (without brake wires)
MPL-A/B15*xxx*-*xx*7*x*AA, MPL-A/B2*xxx*-*xx*7*x*A MPL-A/B3*xxx*-*xx*7*x*AA…MPL-A/B9*xxx*-*xx*7*x*AA	2090-CPBM7DF-*xx*AA*xx* (standard) or 2090-CPBM7DF-*xx*AF*xx* (continuous-flex)	2090-CPWM7DF-*xx*AA*xx* (standard) or 2090-CPWM7DF-*xx*AF*xx* (continuous-flex)
MPM-A/B*xxxx*, MPF-A/B*xxxx*, MPS-A/B*xxxx*		
MPAS-B*xxxx*1-V05S*x*A, MPAS-B*xxxx*2-V20S*x*A MPAI-B*xxxx*, MPAR-B3*xxx* (series B) MPAR-B1*xxx* and MPAR-B2*xxx* (series B and C)		
VPC-B*xxxxx*-S VPC-B3004*x*-M, VPC-B*xxxxx*-Y		
RDB-B*xxxx*-7/3		
MPAS-B*xxxxx*-ALM*x*2C LDAT-S*xxxxxx*-*x*D*x* LDAT-S*xxxxxx*-*x*B*x* LDC-*xxxxxx*-*x*HT*xx*	N/A	
HPK-B*xxxx*, HPK-E*xxxx*	Customer-supplied	

(1) Refer to the Kinetix Motion Accessories Specifications Technical Data, publication KNX-TD004, for cable specifications.

Table 90 - Legacy Motor Power Cables

Motor Cable	Description	Cat. No.
Standard	Power/brake, threaded	2090-XXNPMF-*xx*S*xx*
	Power-only, bayonet	2090-XXNPMP-*xx*S*xx*
Continuous-flex	Power/brake, threaded	2090-CPBM4DF-*xx*AF*xx*
	Power-only, threaded	2090-CPWM4DF-*xx*AF*xx*
	Power-only, bayonet	2090-XXTPMP-*xx*S*xx*

Table 91 - Induction Motor Power Cable Specifications

Cable Manufacturer	Cable Series	Voltage Rating	Temperature Rating
Belden	29500-29507	600V	90 °C (194 °F)
Lapp Group	ÖLFEX VFD XL		
SAB	VFD XLPE TR		

Motor Power/Brake Cable Series Change

Motor power and brake conductors on 2090-CPBM7DF (series A) cables have the following dimensions from the factory. If your cable is reused from an existing application, the actual conductor lengths could be slightly different.

Figure 100 - 2090-CPBM7DF (series A) Power/brake Cable Dimensions

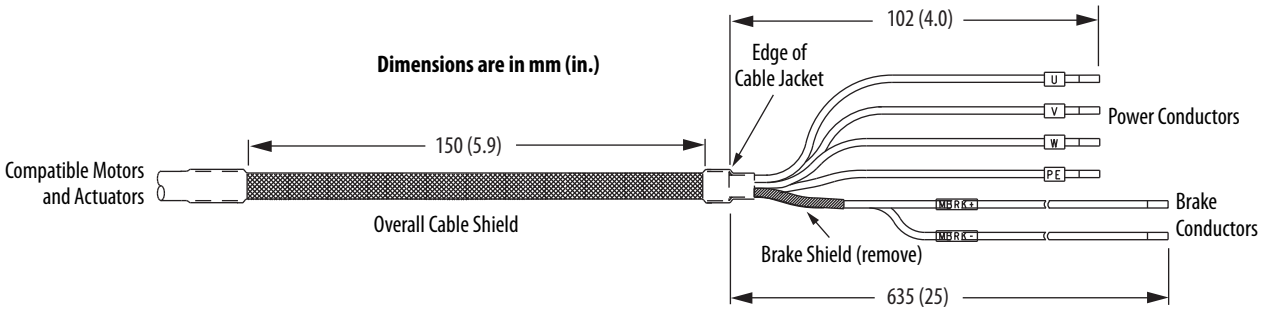

Motor power and brake conductors on 2090-CPBM7DF (series B) 12 and 10 AWG standard, non-flex cables provide (drive end) shield braid and conductor preparation designed for compatibility with multiple Kinetix servo-drive families, including Kinetix 5700 drives.

Figure 101 - 2090-CPBM7DF (series B, 10 or 12 AWG) Power/brake Cable Dimensions

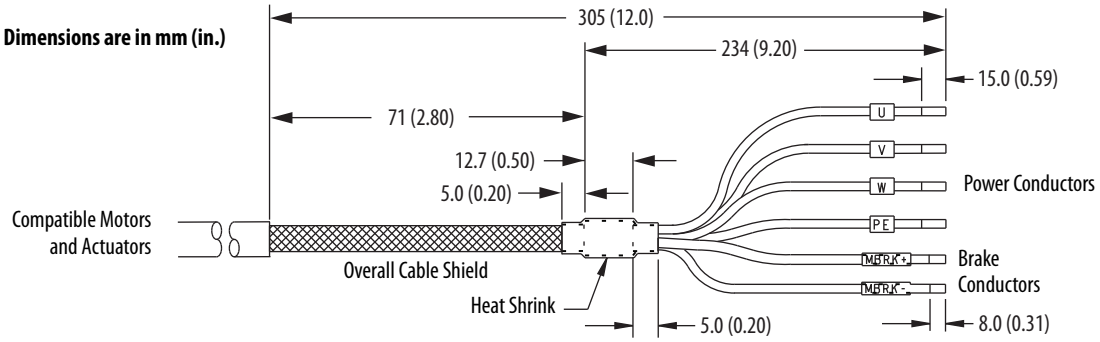

Dual-axis Inverter Power/Brake Cable Installation

Dual-axis inverters are compatible with several Allen-Bradley motor families that require 16, 14, 12, and 10 AWG power/brake cables. Refer to Table 92 for the proper procedure designed for your 2090-CP*x*M7DF cable.

SHOCK HAZARD: To avoid hazard of electrical shock, make sure shielded power cables are grounded according to recommendations.

Table 92 - Cable Preparation for 2090-CP*x*M7DF Cables

Cable Power Conductor Size AWG	Go to:
16 and 14	Cable Preparation for 16 and 14 AWG Cables
12 and 10	Cable Preparation for 12 and 10 AWG Cables

Cable Preparation for 16 and 14 AWG Cables

For dual-axis inverters, the 2090-CPBM7DF power conductor length, 102 mm (4.0 in.), is sufficiently long to reach the MP connector plug and provides adequate stress relief. However, you must remove additional insulation from the power conductors to achieve a strip length of 10 mm (0.39 in.).

The brake conductor length, 635 mm (25 in.), is much longer than necessary. We recommend that you measure 188 mm (7.4 in.) from the edge of the cable jacket (that is covered by heat shrink) and trim off the rest.

Refer to Figure 102 and on page 162 for a typical installation example. For strip lengths and torque values, refer to Table 79 and Table 80 on page 148.

Cable Preparation for 12 and 10 AWG Cables

2090-CPBM7DF (series B) 12 and 10 AWG cables are designed for use with Kinetix 5700 dual-axis inverters and do not require any modifications.

For dual-axis inverters, 2090-CPBM7DF (series A) 12 and 10 AWG conductors are too short and stiff to reach the MP connector plug and provide adequate stress relief.

Follow these steps to prepare your existing (series A) 12 and 10 AWG cables.

1. Remove any heat shrink or small sections of cable jacket from your existing cable.
2. Remove additional cable jacket and shield braid from your cable following the diagram below.

Include a new 12 mm (0.5 in.) section of cable jacket and slide it down to the end of the shield braid.

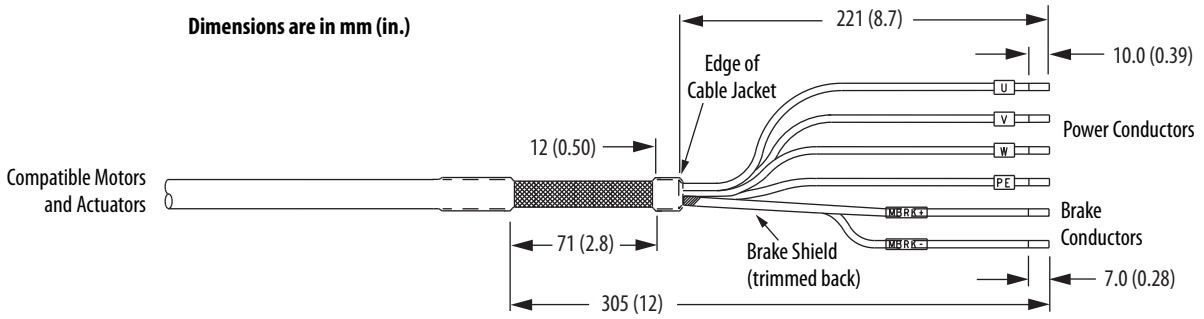

3. Apply heat shrink to the small section of cable jacket.

Refer to Figure 103 for typical installation examples for series A and series B cables. For strip lengths and torque values, refer to Table 79 and Table 80 on page 148.

Dual-axis Inverter Shield Clamp Installation

Follow these steps to apply the dual-axis inverter cable shield clamp.

1. Loosen the clamp knob and determine if you need the clamp spacers.

   The power/brake cable shield attaches to the dual-axis inverter cable clamp. Clamp spacers are included with the dual-axis inverters for cable diameters that are too small for a tight fit within the drive clamp alone.

   The spacers are held captive by nylon rivets. Remove the rivets and spacers when your cable shield is of sufficient diameter for the clamp to hold the cable secure.

   IMPORTANT Most 2090-CP*x*M7DF power/brake cables require the spacers. Only 10 AWG cables with brake conductors have a diameter large enough to fit in the clamp without the spacers.

2. Position the exposed portion of each cable braid directly in line with the clamp.
3. Hand tighten the clamp knob.

   Make sure the cable clamp tightens around the cable shield and provides a good bond between the cable shield and the drive chassis.

Only finger-tight torque on the clamp knob is required. The cable should not move within the clamp under its own weight or when slight pressure is applied by hand.

IMPORTANT If the power/brake cable shield on the dual-axis inverter has a loose fit inside the shield clamp, use a clamp spacer to reduce the clamp diameter. When the clamp knob is tightened, the result must be a high-frequency bond between the cable shield and the drive chassis.

Make sure the clamp is aligned with the shield braid and not heat shrink.

Figure 102 - Dual-axis Inverter Cable Installation (16 and 14 AWG cable)

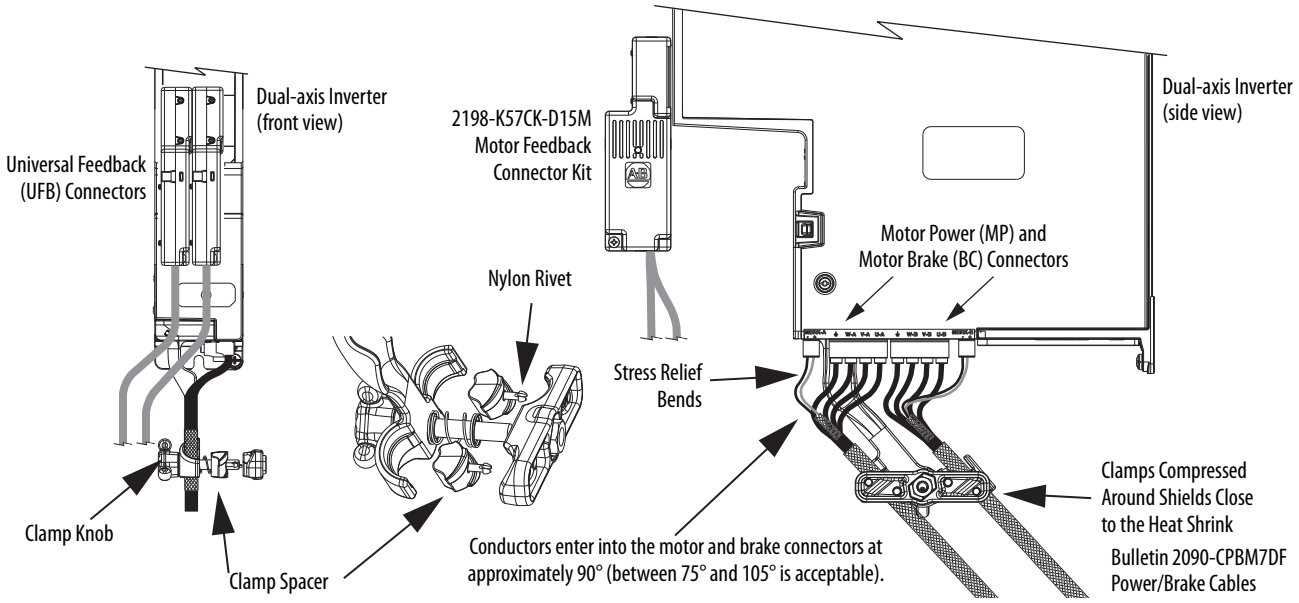

12 and 10 AWG (series A) cables, prepared as shown on page 160, and series B cables have longer conductors that support service loops.

Figure 103 - Dual-axis Inverter Cable Installation (series A and B, 12 and 10 AWG cable)

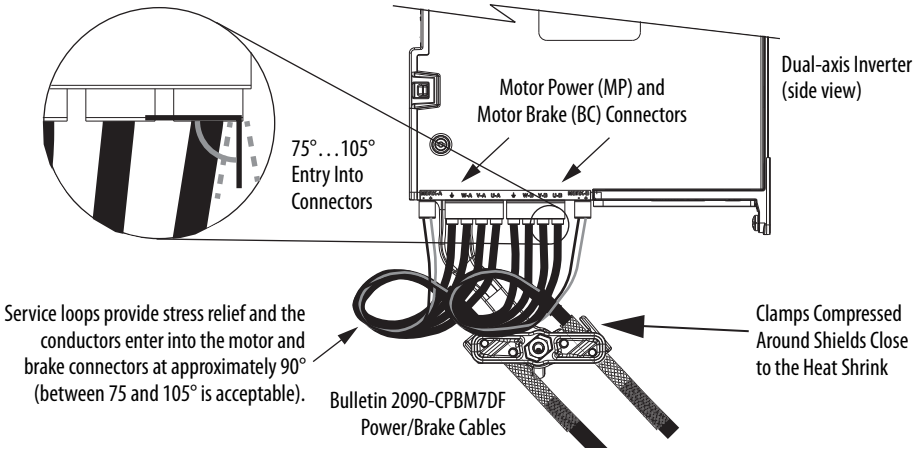

4. Repeat step 1 through step 3 for each dual-axis inverter.

IMPORTANT Avoid sharp bends in the power and brake conductors. You must route the power and brake conductors from where they exit the clamp and enter the motor and brake connectors so that stress-relief bends or service loops are formed.

Single-axis Inverter Power/Brake Cable Installation

All single-axis inverters include a cable-shield clamp bracket that is designed to ground (bond) 2090-CPBM7DF cable shields with the drive chassis.

- 2198-S086-ERS*x*, 2198-S130-ERS*x*, and 2198-S160-ERS*x* single-axis inverters include a two-position cable-shield clamp that accommodates 10, 8, 6, 4, and 2 AWG power conductors. The clamp bracket is connected to the motor power connector and ships with the drive.
- 2198-S263-ERS*x* and 2198-S312-ERS*x* single-axis inverters include a single-position cable-shield clamp that accommodates 4 and 2 AWG power conductors. The clamp bracket ships with the drive, but requires some assembly.

2090-CPBM7DF (series B) 10 AWG cables are designed for use with Kinetix 5700 single-axis inverters and do not require any modifications.

SHOCK HAZARD: To avoid hazard of electrical shock, make sure shielded power cables are grounded according to recommendations.

For single-axis inverters, the 2090-CPBM7DF (series A) cable power conductors, 102 mm (4.0 in.), require adjustment only when the smaller (upper position) clamp is used. The upper position is for smaller cables (10, 8, and 6 AWG). The lower position is for larger cables (4 and 2 AWG). We recommend that you measure from the edge of the cable jacket (that is covered with heat shrink) and trim the power conductors as shown in Table 93.

Table 93 - Power Conductor Trimmed Length

Power Conductor Size AWG	**Power Conductor Length** mm (in.)
6 and 8	75 (2.9)
10	No trimming required
2 and 4	85 (3.3)

The (series A) 2090-CPBM7DF brake conductor length, 635 mm (25 in.) is longer than necessary. Measure from the edge of the heat shrink and trim the brake conductors as shown in Table 94.

Table 94 - Brake Conductor Trimmed Length

Power Conductor Size AWG	Brake Conductor Length mm (in.)
6, 8, 10	315 (12.4)
2 and 4	375 (14.7)

See Figure 104 on page 165 for a typical series-A installation example. For strip lengths and torque values, see Table 80 and Table 81 on page 148 and Table 82 on page 150.

Single-axis Inverter Shield Clamp Installation

Follow these steps to apply the 2198-S086-ERS*x,* 2198-S130-ERS*x*, and 2198-S160-ERS*x* single-axis inverter motor-cable shield clamp when using 2090-CPBM7DF motor power cables.

1. Remove the larger (lower position) clamp or small (upper position) clamp, depending on the power conductor size used in your application.

   IMPORTANT Make sure to use the proper size clamp depending on cable diameter.

2. Loosen the clamp screw.
3. Position the exposed portion of the cable braid directly in line with the clamp.

   IMPORTANT Make sure the clamp is aligned with the shield braid and not heat shrink.

4. Tighten the clamp screw.

   Make sure the cable clamp tightens around the overall cable shield and provides a good bond between the cable shield and the drive chassis.

   Torque value 5.6 N•m (50 lb•in), max.

In Figure 104, 10 AWG (series A) cables are prepared per Table 93 and Table 94 on page 164, and series B cables do not require preparation.

Figure 104 - Single-axis Inverter Cable Installation (series A and B, 10 AWG cables)

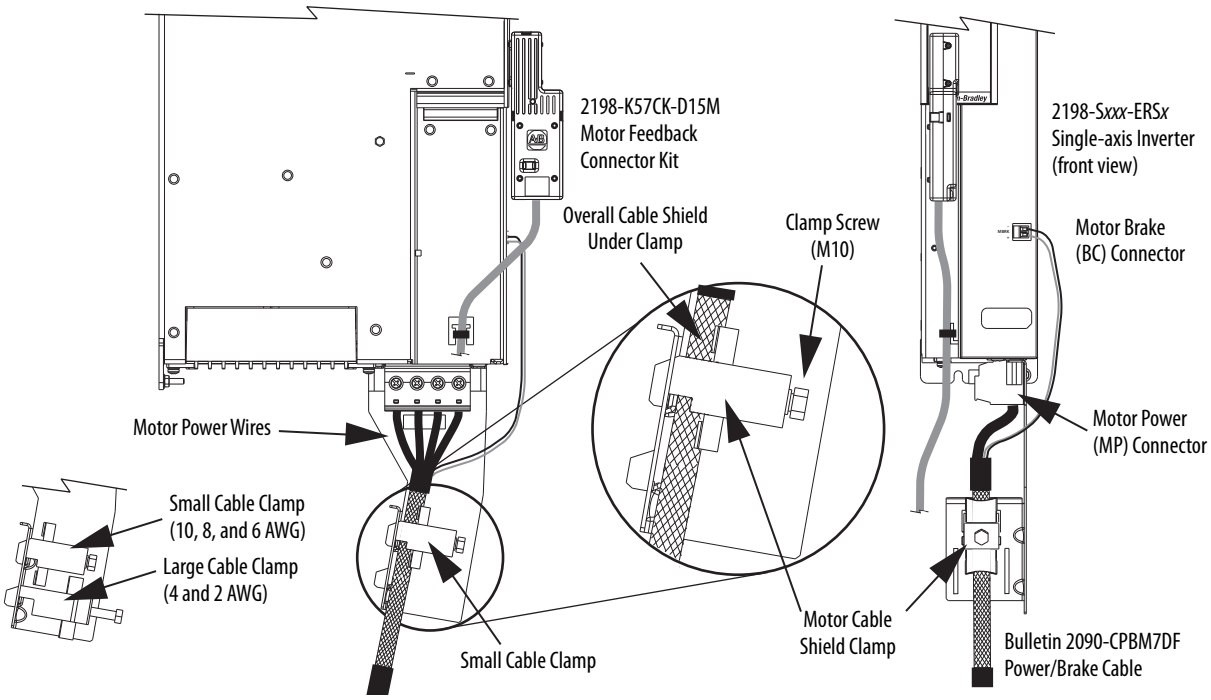

5. Repeat step 1 through step 4 for each drive in multi-axis configurations.

Follow these steps to apply the 2198-S263-ERS*x* and 2198-S312-ERS*x* single-axis inverter motor-cable shield clamp when using 2090-CPBM7DF motor power cables.

1. Install the clamp bracket.
   a. Remove the M8 hex nut by using a 13 mm socket.
   b. Remove the termination block.
   c. Insert the cable clamp bracket over the M8 stud.
   d. Replace the termination block and hex nut.
   e. Tighten the hex nut to 5.6 N•m (50 lb•in), max.

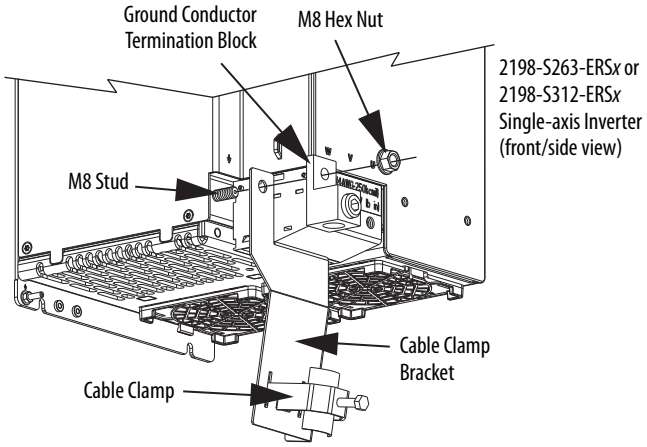

2. Align the clamp-bracket captive screw with hole in chassis and tighten to 1.6 N•m (14 lb•in).

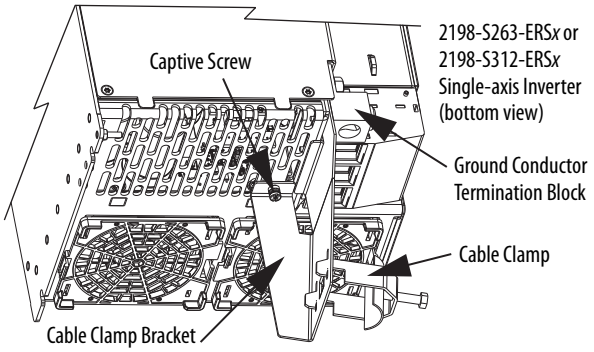

3. Loosen the clamp screw.
4. Position the exposed portion of the cable braid directly in line with the clamp.

IMPORTANT Make sure the clamp is aligned with the shield braid and not the heat shrink.

5. Tighten the clamp screw.

   Make sure the cable clamp tightens around the overall cable shield and provides a good bond between the cable shield and the drive chassis.

   Torque value 5.6 N•m (50 lb•in), max.

In Figure 105, the Bulletin 2090 (4 and 2 AWG) cable requires no preparation.

Figure 105 - Single-axis Inverter Cable Installation (4 and 2 AWG cables)

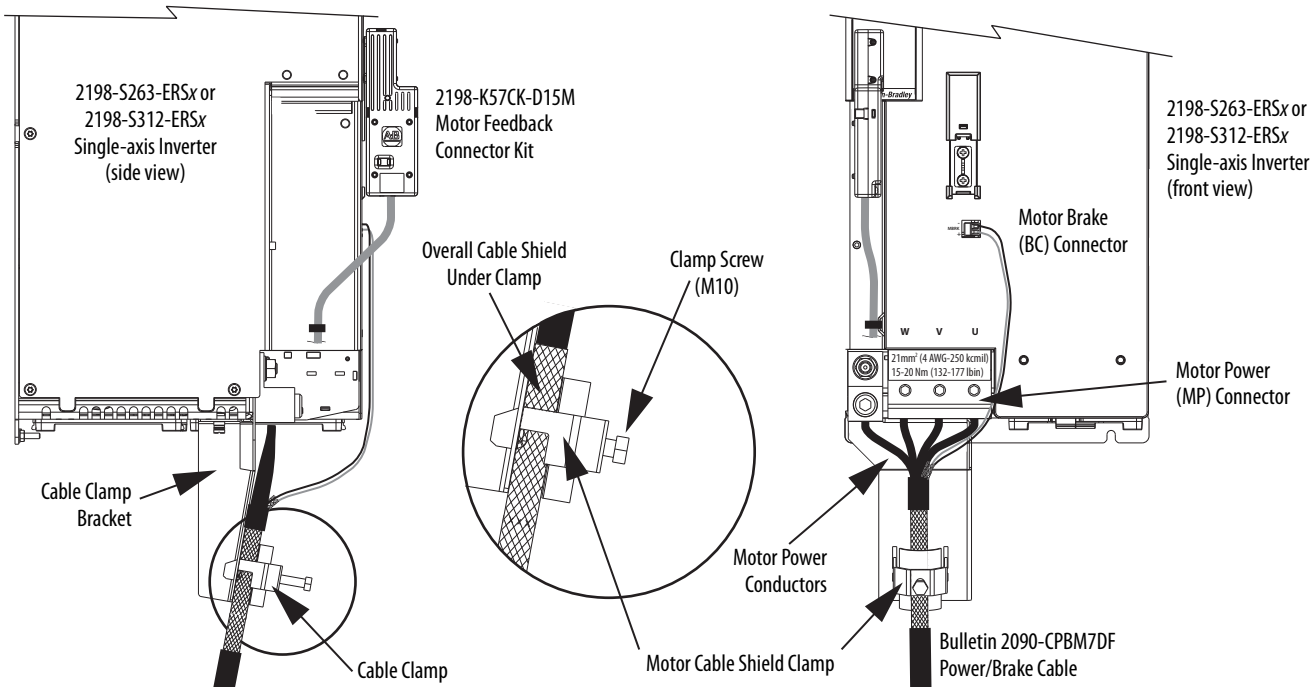

6. Repeat step 1 through step 5 for each drive in multi-axis configurations.

Motor Feedback Connections

You can connect motor feedback to the 2-pin motor feedback (MF) connector or the 15-pin universal feedback (UFB) connector with the associated feedback connector kit.

Table 95 - Feedback Connector Kit Options

Connector Kit Cat. No.	Kinetix 5700 Drive Feedback Connectors	Encoder Feedback Type	Description
2198-H2DCK (series B or later)	Motor feedback (MF)	Single-turn or multi-turn absolute	Converts the 15-pin Hiperface feedback signals from the encoder to 2-pin DSL feedback signals at the drive.
2198-K57CK-D15M	Universal feedback (UFB)	Single-turn/ multi-turn absolute, incremental, or EnDat	Feedback signals pass straight through encoder to drive for motor feedback or auxiliary feedback.

Feedback cables attach to the connector kit and are wired to the connector inside the connector kit. Bulletin 2090 feedback cables require preparation to make sure the shield clamp attaches properly and conductors route smoothly to the connector terminals.

All of the current and legacy feedback cables listed below are compatible with the 2198-H2DCK converter kit and 2198-K57CK-D15M connector kit.

Table 96 - Compatible Motors and Actuators

Motor/Actuator Families	Single-turn or Multi-turn Absolute Encoders		Incremental Encoders	
	Motor /Actuator Cat. No.	Feedback Cable Cat. No.	Motor/Actuator Cat. No.	Feedback Cable Cat. No.
Kinetix MPL servo motors	MPL-A/B15*xxx*. . . MPL-A/B2*xxx*-V/E MPL-A/B3*xxx*. . . MPL-A/B9*xxx*-M/S	2090-CFBM7DF-CEAA*xx* 2090-CFBM7DD-CEAA*xx* 2090-CFBM7DF-CERA*xx* (standard) or 2090-CFBM7DF-CEAF*xx* 2090-CFBM7DD-CEAF*xx* 2090-CFBM7DF-CDAF*xx* (continuous-flex)	MPL-A/B15*xxx*. . . MPL-A/B2*xxx*-H MPL-A/B3*xxx*. . . MPL-A/B45*xxx*-H	2090-XXNFMF-S*xx* (standard) 2090-CFBM7DF-CDAF*xx* (continuous-flex)
Kinetix MPM servo motors	MPM-A/B*xxxxx*-M/S		N/A	
Kinetix MPF servo motors	MPF-A/B*xxxx*-M/S		N/A	
Kinetix MPS servo motors	MPS-A/B*xxxx*-M/S		N/A	
Kinetix VPC servo motors	VPC-B*xxxxx*-S VPC-B3004*x*-M VPC-B*xxxxx*-Y		N/A	
Kinetix HPK servo motors	HPK-B*xxxxxx*-M/S		N/A	
Kinetix MPAS/MPMA integrated linear stages	MPAS-B*xxxxx*-V*xx*S*x*A (ballscrew)		MPAS-B*xxxxx*-ALM*x*2C (direct drive)	
Kinetix MPAR electric cylinders	MPAR-B*xxxxx*		N/A	
Kinetix MPAI heavy-duty electric cylinders	MPAI-B*xxxxx*		N/A	
LDAT-Series integrated linear thrusters	LDAT-S*xxxxxx*-*x*D*x*		LDAT-S*xxxxxx*-*x*B*x*	
LDC-Series™ iron-core linear motors	N/A		LDC-*xxxxxx*-*x*HT*xx*	
Kinetix RDB direct-drive motors	RDB-B*xxxx*-7/3	2090-XXNFMF-S*xx* 2090-CFBM7DF-CDAF*xx*	N/A	

Table 97 - Legacy Motor Feedback Cables

Motor Cable	Description	Cable Cat. No.
Standard	Encoder feedback, threaded	2090-XXNFMF-S*xx* 2090-UXNFBMF-S*xx*
	Encoder feedback, bayonet	2090-UXNFBMP-S*xx* 2090-XXNFMP-S*xx*
Continuous-flex	Encoder feedback, bayonet	2090-XXTFMP-S*xx*
	Encoder feedback, threaded	2090-CFBM4DF-CDAF*xx*

Figure 106 - 2198-H2DCK Converter Kit Pinout

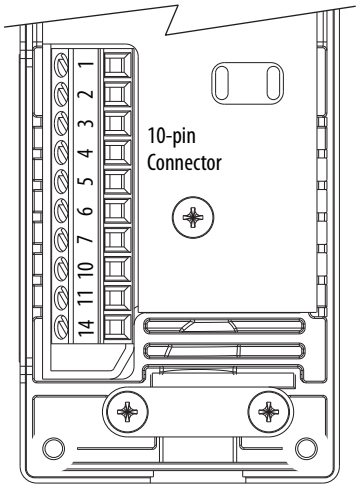

Terminal	Signal	Wire Color	Strip Length mm (in.)	Torque Value N•m (lb•in)
1	SIN+	Black	5.0 (0.2)	0.22…0.25 (1.9…2.2)
2	SIN–	White/Black		
3	COS+	Red		
4	COS–	White/Red		
5	DATA+	Green		
6	ECOM (1)	White/Gray		
7	EPWR_9V (2)	Orange		
10	DATA–	White/Green		
11	TS	White/Orange		
14	EPWR_5V (2)	Gray		

(1) The ECOM and TS- connections are tied together and connect to the cable shield.

(2) The converter kit generates 9V and 5V from a 12V supply coming from the drive. The 9V supply is used by 9V encoders in 460V motors and actuators.

Figure 107 - 2198-K57CK-D15M Connector Kit Pinout

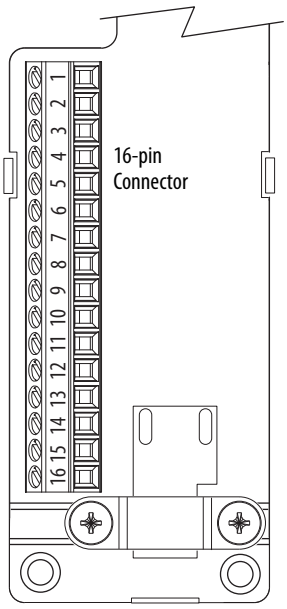

Terminal	Signal		Wire Color	Strip Length mm (in.)	Torque Value N•m (lb•in)
1	SIN+	AM+	Black	5.0 (0.2)	0.22…0.25 (1.9…2.2)
2	SIN–	AM–	White/Black		
3	COS+	BM+	Red		
4	COS–	BM–	White/Red		
5	DATA+	IM+	Green		
6	ECOM (1)		White/Gray		
7	EPWR_9V		Orange		
8	S3		White/Yellow		
9	CLK+		Brown		
10	DATA–	IM–	White/Green		
11	TS		White/Orange		
12	S1		White/Blue		
13	S2		Yellow		
14	EPWR_5V		Gray		
15	CLK–		White/Brown		
16	Drain		N/A		

(1) The ECOM and TS- connections are tied together and connect to the cable shield.

Motor Feedback Cable Preparation

Observe the lead preparation guidelines for each of the connector kits.

IMPORTANT This length of wire is needed to provide a service loop for the longest wires terminated at the terminal block. However, most wires need to be trimmed shorter, depending on the terminal they are assigned to.

Figure 108 - Lead Preparation for 2198-H2DCK Converter Kit

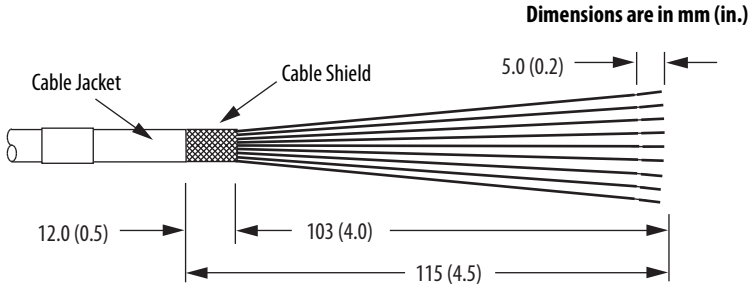

Figure 109 - Lead Preparation for 2198-K57CK-D15M Connector Kit

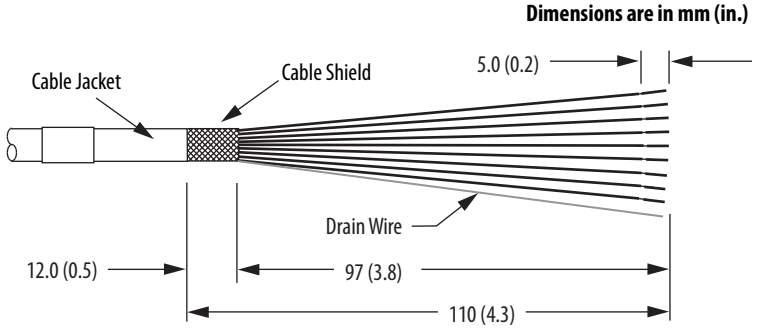

IMPORTANT For the 2198- K57CK-D15M universal connector kit, if your 2090-Series motor cable does not include a drain wire, you must create one from the overall shield during wire preparation and connect it to pin 16.

Apply the Converter Kit/Connector Kit Shield Clamp

Follow these steps to apply the shield clamp.

1. Apply the shield clamp to the 12 mm (0.5 in.) of exposed cable shield.

IMPORTANT	Cable preparation and positioning/wiring that provides a high-frequency bond between the shield braid/drain wire and ground is required to optimize system performance. Also, make sure that the cable is positioned where the cover clamps onto the jacket for added stress relief.

   a. For the 2198- H2DCK converter kit, the shield clamp achieves a high-frequency bond between the shield braid and ground.

      Apply 0.30 N•m (2.6 lb•in) torque to the clamp screws.

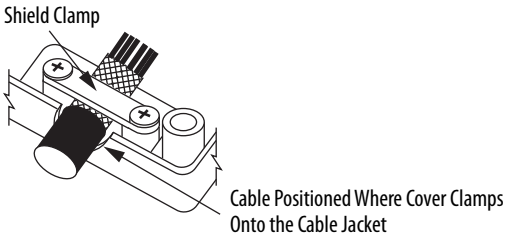

   b. For the 2198- K57CK-D15M connector kit, you must attach the drain wire to pin 16 to achieve a high-frequency bond.

IMPORTANT	If your 2090-Series motor cable does not include a drain wire, you must create one from the overall shield braid.

      Apply 0.34 N•m (3.0 lb•in) torque to the clamp screws.

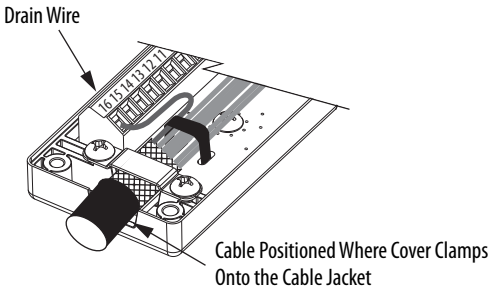

2. Route and insert each wire to its assigned terminal.

   Include a service loop, as shown on page 172, and refer to the connector pinout on page 168.

3. Tighten each terminal screw.

   Apply 0.22...0.25 N•m (1.9...2.2 lb•in) torque to each screw.

4. Gently pull on each wire to make sure it does not come out of its terminal; reinsert and tighten any loose wires.

5. Attach the tie wrap for added stress relief.

Table 98 - 2090-CFBM7DF-CEA*xxx* Feedback Cables

Rotary Motors	MPL-A/B15*xxx*…MPL-A/B2*xxx*-V/E*x*4/7*x*AA MPL-A/B3*xxx*…MPL-A/B9*xxx*-M/S*x*7*x*AA MPF-A/B*xxx*-M/S, MPS-A/B*xxx*-M/S MPM-A/B*xxxxx*-M/S, VPC-B*xxxxx*-S, VPC-B3004*x*-M HPK-B*xxxxx*-M/S, HPK-E*xxxxx*-M/S	2198-H2DCK Converter Kit Pin	2198-K57CK-D15M Connector Kit Pin	Rotary Motors	VPC-B*xxxxx*-Y	2198-K57CK-D15M Connector Kit Pin
Linear Actuators	MPAS-B*xxxxx*-V*xx*S*x*A MPAR-B*xxxx* MPAI-B*xxxx* LDAT-S*xxxxxx*-*x*D*x*			Linear Actuators		
1	SIN+	1	1	1	–	1
2	SIN–	2	2	2	–	2
3	COS+	3	3	3	CLK+	9
4	COS–	4	4	4	CLK–	15
5	DATA+	5	5	5	DATA+	5
6	DATA–	10	10	6	DATA–	10
9	EPWR_5V	–	14	9	EPWR_5V	14
10	ECOM	6 (1)	6 (1)	10	ECOM	6 (1)
11	EPWR_9V	7	7	11	–	–
12	ECOM	6	6	12	ECOM	6
13	TS	11	11	13	TS	11

(1) The ECOM and TS- connections are tied together and connect to the cable shield.

Table 99 - 2090-XXNFMF-S*xx* or 2090-CFBM7DF-CDA*xxx* Feedback Cables

Rotary Motors	MPL-A/B15*xxx*…MPL-A/B2*xxx*-H*x*4/7*x*AA MPL-A/B3*xxx*…MPL-A/B45*xxx*-H*x*4/7*x*AA	RDB-Bxxxx-7/3	2198-K57CK-D15M Connector Kit Pin
Linear Actuators	MPAS-B*xxxxx*-ALM*x*2C LDAT-S*xxxxxx*-*x*B*x* LDC-*xxxxxx*-*x*HT*xx*		
1	AM+	SIN+	1
2	AM–	SIN–	2
3	BM+	COS+	3
4	BM–	COS–	4
5	IM+	DATA+	5
6	IM–	DATA–	10
9	EPWR_5V	EPWR_5V	14
10	ECOM	ECOM	6 (1)
12	ECOM	ECOM	6
13	TS	TS	11
15	S1	–	12
16	S2	–	13
17	S3	–	8

(1) The ECOM and TS- connections are tied together and connect to the cable shield.

A mounting bracket is included with the 2198-H2DCK converter kit to secure the kit to the drive. Install the mounting bracket in the bottom mounting position on the kit, and the kit mounting holes on the drive.

Figure 110 - Wiring the 2198-H2DCK Feedback Converter Kit

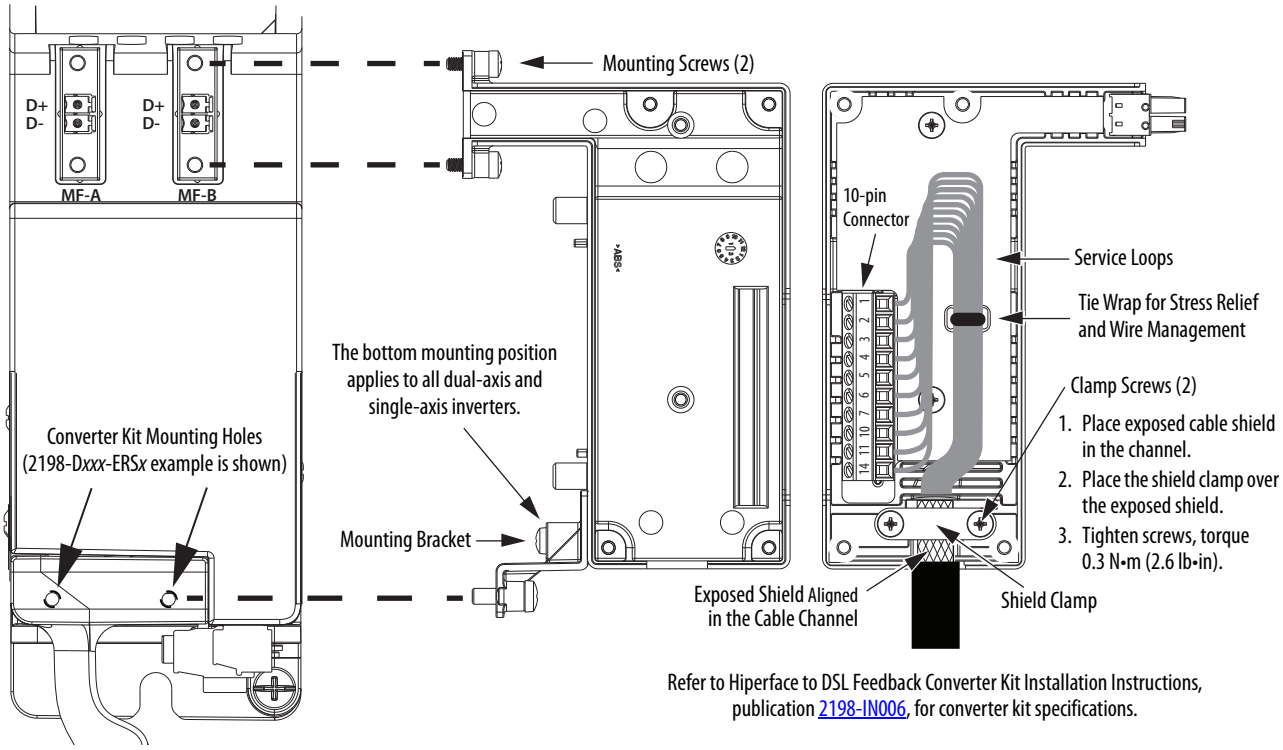

Figure 111 - Wiring the 2198-K57CK-D15M Feedback Connector Kit

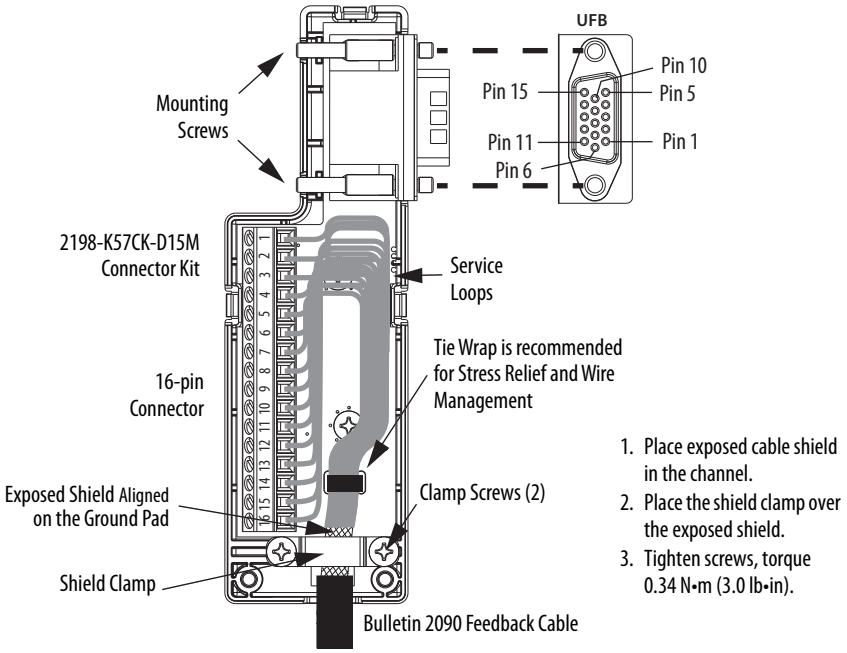

Customer-supplied Motor Power Cables

For 2198-S263-ERS*x* and 2198-S312-ERS*x* single-axis inverters that are paired with motors that require power cables greater than 2 AWG and up to 250 kcmil, customer supplied cable is necessary.

IMPORTANT The cable clamp bracket and shield clamp, included with your drive, does not apply to customer supplied cables larger than 2 AWG.

We recommend six conductor cables with three conductors for power and another three conductors that can be twisted together to form a suitable ground wire.

Follow these steps to prepare customer-supplied motor power cables.

1. Remove 279 mm (11.0 in.) of the cable jacket.

   In addition, remove the same amount of shield braid, copper foil, or other overall shielding.

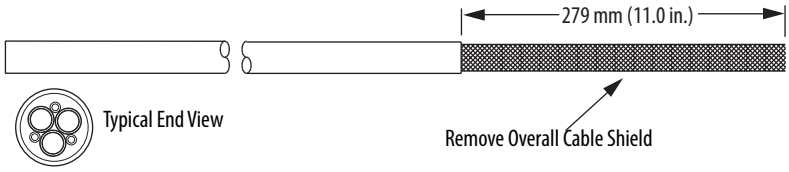

2. Separate the power conductors from the ground conductors.

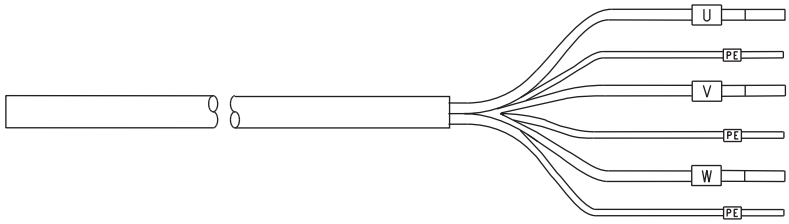

   In this example, the power conductors are insulated and the ground conductors are not.

3. Twist the three ground conductors together to form a single ground conductor.

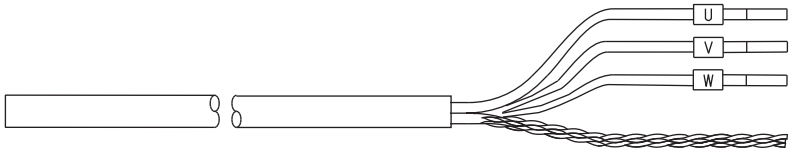

4. Apply heat shrink to the ground conductor.

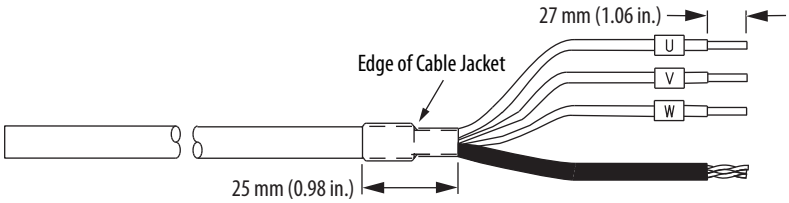

5. Apply heat shrink over the cable jacket and the four insulated conductors.
6. Trim the insulation to leave a strip length of 27 mm (1.06 in.)

Figure 112 - MP and BC Connector Wiring (single-axis inverters)

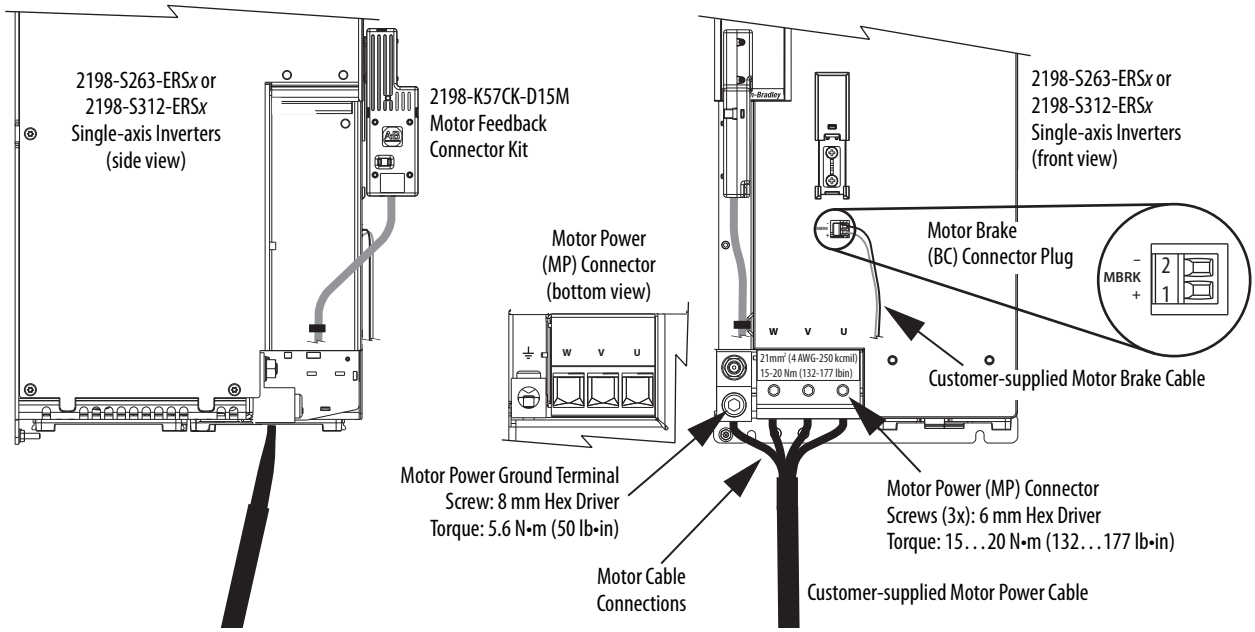

Prepare the customer-supplied motor power cable (see page 173), then attach motor power and ground wires to the motor power connector and ground terminal. Plug in motor feedback and brake connectors, as required for your application.

IMPORTANT The supplied ground terminal is suitable for use with 16…120 mm^2 (6 AWG…250 kcmil) Class B and C power cables and all Allen-Bradley Bulletin 2090 motor cables. A customer-supplied lug is required for all other applications.

Table 100 - Motor Power Connector Specifications (single-axis inverters)

Drive Module Cat. No.	Pin	Signal/Wire Color	Recommended Wire Size mm^2 (AWG)	Strip Length mm (in.)	Terminal Torque Value N•m (lb•in)
2198-S263-ERS*x* 2198-S312-ERS*x*	U V W ⏚	U Brown V Black W Blue ⏚ Green/Yellow	21.1…120 (4…250 kcmil)	27.0 (1.06)	15…20 (132…177)

If you replace the ground-conductor termination block with a lug, the lug size must not exceed these maximum dimensions.

Figure 113 - Maximum Customer-supplied Lug Dimensions

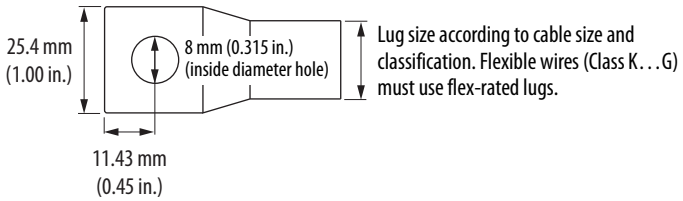

Motor brake conductors are customer supplied. We recommend unshielded cable up to 90 m (295 ft).

Table 101 - Motor Brake (BC) Connector Specifications

Drive Module Cat. No.	Pin	Signal	Recommended Wire Size (AWG)	Strip Length mm (in.)	Torque Value N•m (lb•in)
2198-S263-ERS*x* 2198-S312-ERS*x*	BC-1	MBRK+	16	7.0 (0.28)	0.22…0.25 (1.9…2.2)
	BC-2	MBRK-			

TIP Motors used with 2198-S263-ERS*x* and 2198-S312-ERS*x* inverters typically use a brake coil that is not 24V DC. In this case, use a customer-supplied auxiliary relay to power the customer-supplied brake coil.

Accessory Module Connections

Follow these guidelines when wiring the 2198-CAPMOD-2240 capacitor module, 2198-CAPMOD-DCBUS-IO extension module, and 2198-DCBUSCOND-RP312 DC-bus conditioner module:

- Wire module status (MS) output connections to digital input Bus Capacitor OK, Bus Conditioner OK, or the Logix 5000™ controller (optional).
- Flexible bus-bars (included with 2198-CAPMOD-DCBUS-IO extension modules) are required whenever two accessory modules are mounted side-by-side in 208 A systems. If your system does not include the extension module, order the 2198-KITCON-DCBUSCOND or 2198-KITCON-CAPMOD2240 replacement kit.
- Refer to DC-bus Power Supply with Capacitor Module wiring example on page 345.
- Refer to Regenerative Bus Supply with DC-bus Conditioner Module wiring example on page 349.
- Refer to Kinetix 5700 Accessory Module Status Indicators on page 277 for troubleshooting the module status indicators and relay output.

IMPORTANT To improve system performance, run wires and cables in the wireways as established in Chapter 2. Connections to the DC bus must be made with the shared-bus connection system.

Figure 114 - MS Connector Wiring (capacitor module and DC-bus conditioner module)

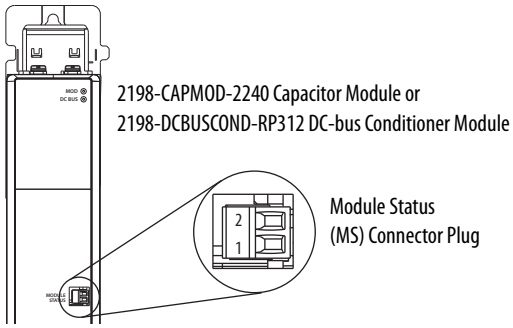

Table 102 - Accessory Module Connector Specifications

Connector Description	Pin	Signal	Recommended Wire Size mm^2 (AWG)	Strip Length mm (in.)	Torque Value N•m (lb•in)
Module Status	MS-1 MS-2	MS MS	0.14…1.5 (28…16)	7.0 (0.28)	0.22…0.25 (1.9…2.2)
PELV/SELV 24V power (plug)	CP-1 CP-2	24V+ 24V-	0.5…4 (20…12)	7.0 (0.28)	0.22…0.25 (1.9…2.2)
DC-bus power	Bus-bar	DC- DC+	N/A (1)	N/A (1)	N/A (1)
DC-bus studs	Bus-bar		N/A	N/A	18 (156)
	Lugs		53.5 (1/0 AWG) 104 A 152 (300 kcmil) 208 A	N/A (2)	

(1) DC bus connections are always made from one drive module to another over the shared-bus connection system. These terminals do not receive discrete wires.
(2) Strip length for the DC-bus studs depend on the customer-supplied lugs.

External Passive-shunt Connections

Passive shunts attach to only 2198-P*xxx* DC-bus power supplies. See Passive Shunt Considerations on page 49 for shunts compatible with your DC-bus power supply.

Follow these guidelines when wiring your 2198-R*xxx* passive shunt:

- Refer to External Passive Shunt Modules on page 72 for noise zone considerations.
- Refer to Passive Shunt Wiring Examples on page 359.
- Refer to the installation instructions provided with your Bulletin 2198 shunt module, publication 2198-IN011.

IMPORTANT To improve system performance, run wires and cables in the wireways as established in Chapter 2.

Figure 115 - RC Connector Wiring

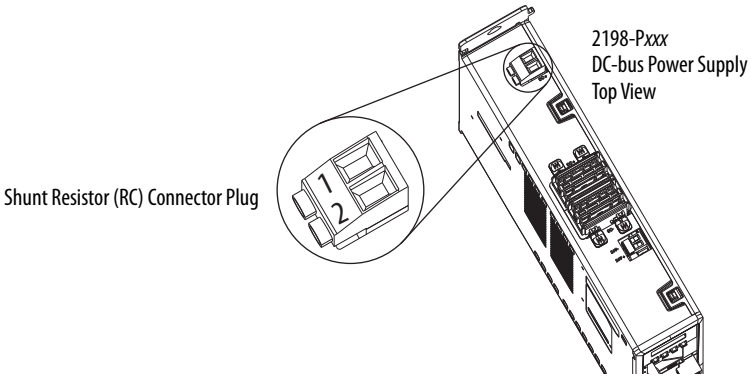

Table 103 - Shunt Resistor (RC) Connector Specifications

DC-bus Power Supply Cat. No.	Pin	Signal	Recommended Wire Size mm^2 (AWG)	Strip Length mm (in.)	Torque Value N•m (lb•in)
2198-P*xxx*	RC-1 RC-2	SH DC+	1.5…6 (16…10)	12.0 (0.47)	0.5…0.6 (4.4…5.3)

IMPORTANT You must disconnect the internal shunt wires at the RC connector before connecting the Bulletin 2198 passive shunt resistor wires.

External Active-shunt Connections

Active shunts are available from the Rockwell Automation Encompass™ partner Powerohm Resistors, Inc. See Active Shunt Considerations on page 50 for Powerohm shunts compatible with your Kinetix 5700 power supply.

Rockwell Automation Encompass Partners	Contact Information
Powerohm Resistors, Inc.	5713 13th Street Katy, Texas 77493 Tel: (800) 838-4694 http://www.powerohm.com

Follow these guidelines when wiring your Powerohm active shunt:

- Refer to External Active Shunt Modules on page 74 for noise zone considerations.
- Refer to Active Shunt Wiring Examples on page 360.
- Refer to the installation instructions provided with your Bulletin PWB*xxx* and PKB*xxx* Powerohm shunt module.

IMPORTANT To improve system performance, run wires and cables in the wireways as established in Chapter 2.

DC-bus Power Supply Active Shunt Connections

Make active shunt connections in drive systems that include the DC-bus power supply and Powerohm PKB*xxx* or PWB*xxx* active shunts at the external DC-bus studs on accessory modules.

Refer to Wire the External DC-bus Connections on page 179.

Regenerative Bus Supply Active Shunt Connections

Make active shunt connections to the 2198-RP*xxx* regenerative bus supply at the active shunt (RC) connector or the external DC-bus studs on accessory modules, depending on the shunt type.

Connections at the Active Shunt (RC) Connector

You can make active shunt connections in drive systems that include the regenerative bus supply and Powerohm PKB*xxx*-800 active shunts at the Active Shunt (RC) connector.

Figure 116 - RC Connector Wiring

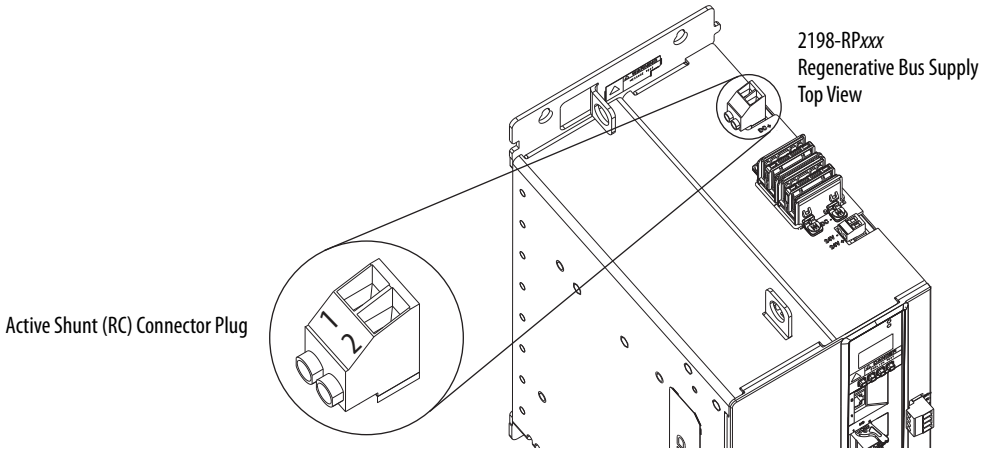

Table 104 - Active Shunt (RC) Connector Specifications

Regenerative Bus Supply Cat. No.	Pin	Signal	Continuous (1) Current, max	Recommended Wire Size mm^2 (AWG)	Strip Length mm (in.)	Torque Value N•m (lb•in)
2198-RP*xxx*	RC-1 RC-2	DC– DC+	10 A	2.5…6 (14…10)	12.0 (0.47)	0.5…0.6 (4.4…5.3)

(1) This connector applies to only Powerohm PKB*xxx-xxx* active shunts rated at 7 kW or less.

IMPORTANT Due to the 10 A connector current rating, connections to the RC connector are limited to only Powerohm PKB*xxx-xxx* active shunts rated at 7 kW or less. All other PKB*xxx-xxx* and PWB*xxx-xxx* active shunt connections must be made to the 2198-CAPMOD-2240 capacitor module.

Connections at the External DC-bus Studs

You can make active shunt connections in drive systems that include the regenerative bus supply and Powerohm PKB*xxx*-800 or PWB*xxx*-800 active shunts at the external DC-bus studs on accessory modules.

Refer to Wire the External DC-bus Connections.

Wire the External DC-bus Connections

Accessory modules are equipped with spacers that slide onto the M8 studs. When the system configuration includes external DC-bus and active shunt connections, external DC-bus connections are made below the spacer and active shunt connections are made above the spacer.

Figure 117 - Active Shunt Connections

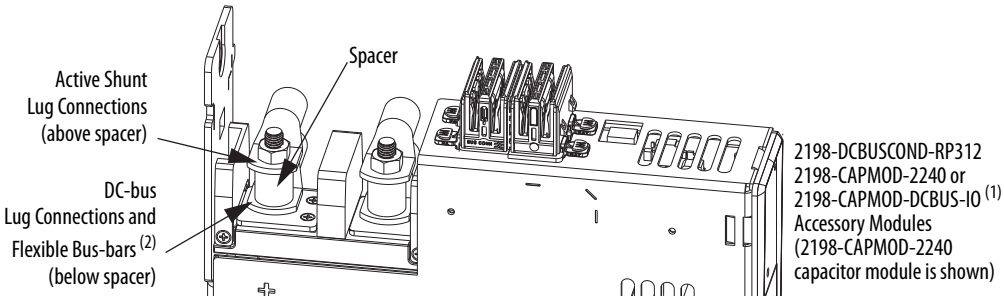

(1) An external active shunt can be wired to any of the accessory modules. See Mount Accessory Modules on page 81 for more information on mounting and accessory module example configurations. The 2198-CAPMOD-2240 capacitor module is preferred because it provides additional system capacitance.

(2) Position flexible bus-bars (when two accessory modules are used) below the DC-bus lug connections. The flexible bus-bars are used to parallel the extended DC-bus with another accessory module in 208 A systems (not required when only one accessory module is used in 104 A systems). Flexible bus-bars are included with 2198-CAPMOD-DCBUS-IO extension modules or you can order 2198-KITCON-CAPMOD2240 or 2198-KITCON-DCBUSCOND replacement kits.

Kinetix VPC Motors and the Extended Speed Feature

The extended speed feature is implemented in the Logix Designer application to prevent accidental motor operation at unsafe speeds. See Field Weakening Mode on page 462 for a description of this feature.

WARNING: Kinetix VPC motor operation at speeds exceeding the bus-overvoltage speed limit can result in personal injury and/or damage to the drive. To avoid equipment damage and personal injury, an active shunt must be configured in the Logix Designer application to protect the DC-bus system from an overvoltage condition.

IMPORTANT Refer to Motion Analyzer software to verify drive/shunt system sizing. Access the tool at https://motionanalyzer.rockwellautomation.com.

Powerohm Bulletin PKB and PWB active-shunt modules are required for DC-bus system protection when Kinetix VPC motors are expected to operate in the extended speed region at speeds exceeding the bus-overvoltage speed limit.

Considerations for Powerohm Shunt Installation

Refer to the Powerohm documentation included with your Bulletin PKB or PWB shunt module to install, wire, and configure the module.

- To avoid nuisance thermal overload trips, configure Bulletin PKB and PWB active-shunt modules to the highest shunt turn-on voltage setting. The recommended setting for Line Voltage Level Jumper is JP5.
- Configure Bulletin PKB and PWB active-shunt modules in Internal (automatic) mode. Unless an external enable signal is provided, configure the Brake Enable Jumper in Internal (automatic) mode (JP6 is in the downward position).

Ethernet Cable Connections

This procedure assumes that you have your Logix 5000 controller and Kinetix 5700 modules mounted and are ready to connect the network cables.

The EtherNet/IP™ network is connected by using the PORT 1 and PORT 2 connectors. Refer to page 92 to locate the Ethernet connectors on your drive module. Refer to Figure 118 to locate the connectors on your Logix 5000 controller.

Shielded Ethernet cable is required for EMC compliance and is available in several standard lengths. Ethernet cable lengths connecting drive-to-drive, drive-to-controller, or drive-to-switch must not exceed 100 m (328 ft). Refer to the Kinetix Motion Accessories Specifications Technical Data, publication KNX-TD004, for more information.

Figure 118 - ControlLogix and CompactLogix Ethernet Port Locations

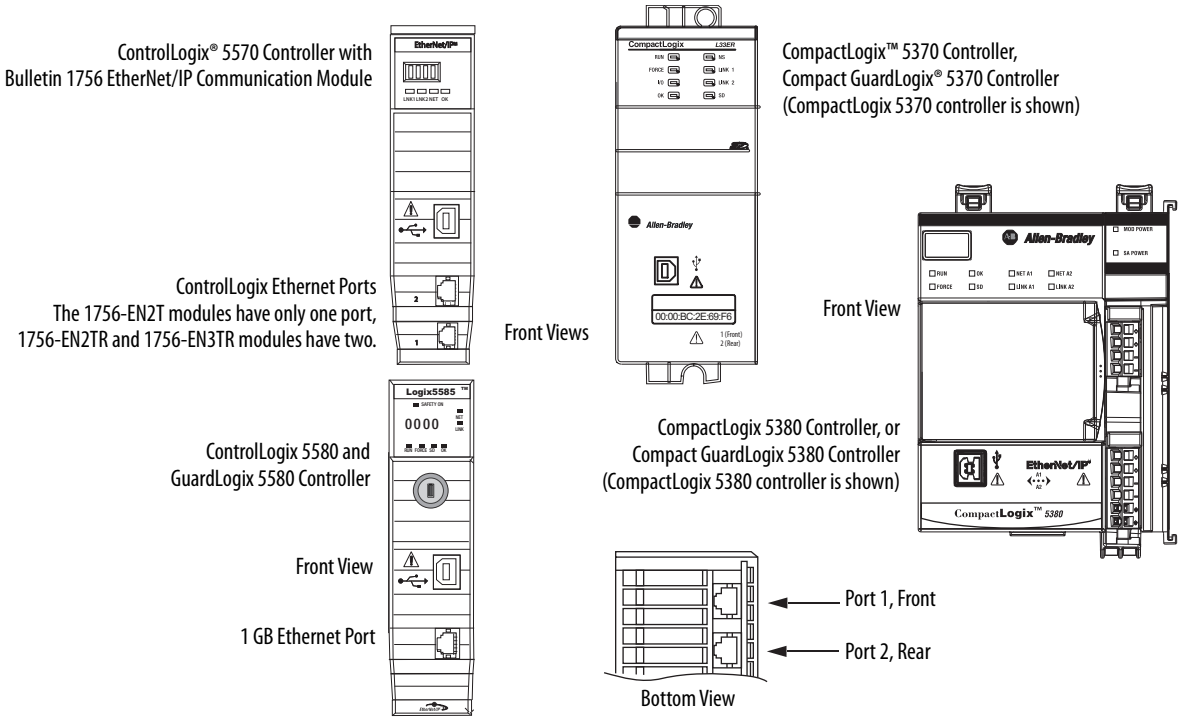

The Logix 5000 controllers accept linear, ring (DLR), and star network configurations. Refer to Typical Communication Configurations on page 29 for linear, ring, and star configuration examples.

IMPORTANT When using an external Ethernet switch for routing traffic between the controller and the drive, switches with IEEE-1588 time synchronization capabilities (boundary or transparent clock) must be used to make sure switch delays are compensated.

IMPORTANT When configured for standalone operation, the iTRAK power supply requires an Ethernet connection for firmware upgrades that use ControlFLASH™ or ControlFLASH Plus™ software. This connection can also be used to access real-time data, for example, event logging.

Notes:

Configure and Start the Kinetix 5700 Drive System

This chapter provides procedures for configuring your Kinetix® 5700 drive system with a Logix 5000™ controller by using the Logix Designer application.

Topic	Page
Understand the Kinetix 5700 Display	184
Configure the Drive	194
Studio 5000 Logix Designer	194
Configure the Kinetix 5700 Drive Modules	199
Configure the Motion Group	224
Configure Regenerative Bus Supply Axis Properties	225
Configure Vertical Load Control Axis Properties	230
Configure Feedback-only Axis Properties	231
Configure Induction-motor Frequency-control Axis Properties	233
Configure IPM Motor Closed-loop Control Axis Properties	242
Configure SPM Motor Closed-loop Control Axis Properties	246
Configure Induction-motor Closed-loop Control Axis Properties	251
Configure Feedback Properties	258
Download the Program	263
Apply Power to the Kinetix 5700 Drive System	264
Understand Bus-sharing Group Configuration	265
Test and Tune the Axes	268

TIP Before you begin, make sure that you know the catalog number for each drive module, the Logix module and /or controller, and the motor used in your motion control application.

Understand the Kinetix 5700 Display

The Kinetix 5700 drives have two status indicators and an LCD status display. The indicators and display are used to monitor the system status, set network parameters, and troubleshoot faults. Four navigation buttons, directly below the display, are used to select items from a soft menu.

Figure 119 - Kinetix 5700 Drive LCD Display and Status Indicators

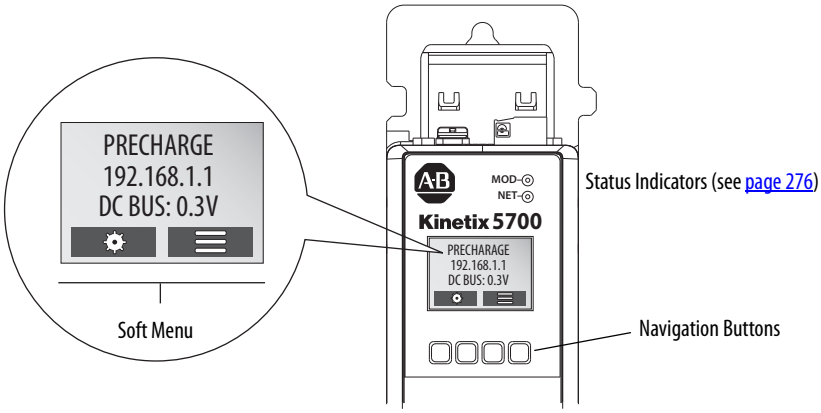

This is the Home screen.

- The setup selections are tied to the Setup (left-side) buttons and the menu selections are tied to the Menu (right-side) buttons.
- For dual-axis inverters, the Drive (center) buttons toggle the display between drive A and B (A is the default drive).

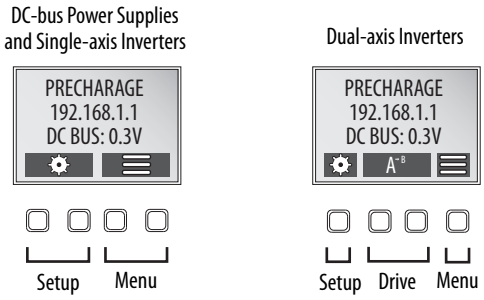

The soft menu provides a changing selection that corresponds to the current screen. Use the navigation buttons to perform the following.

	Press to go back. Pressing enough times results in the Home screen.
	Pressing either arrow moves the selection to the next (or previous) item. When changing values, pressing the up arrow increments the highlighted value. Values rollover after reaching the end of the list.
	Press to select values to change, moving from right to left. Values rollover when reaching the end of the list.
	Press to select a menu item.
	Press to return to the Home screen.
	Press to display the fault help (possible solutions in troubleshooting tables). (1)

(1) For Kinetix 5700 fault code descriptions and possible solutions, see the Knowledgebase Technote: Kinetix 5700 Servo Drives Fault Codes.

Each soft menu item is executed by pressing the navigation button directly below the item, as shown in this example.

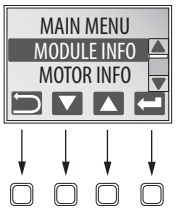

Menu Screens

The menu screens provide information about the drives, motors, diagnostics, and the fault log. Parameters cannot be updated in the menu screens. Press one of the menu buttons to access the menu.

You can use the soft menu items and navigation buttons to view the information.

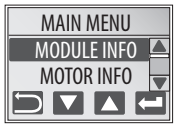

Table 105 - Navigating the Inverter Menu

Menu/Sub Menu Selections	Attributes	Description	Example Values	
Drive Info	Catalog number		2198-D*xxx*-ERS*x* or 2198-S*xxx*-ERS*x*	
	Firmware revision		FW REV: 1.1.450167	
	Hardware revision		HW REV: 1.1	
	Serial number		SERIAL#: xxxxxxxxxxx	
Motor Info	Model number		MODEL: VPL-B1306F	
	Serial number		SERIAL#: xxxxxxxxxxx	
Diagnostics> Drive Diagnostics	Bus diagnostics		BUS VOLT: 0.0V	
			BUS CUR: 0.0A	
	Inverter diagnostics		INV UTIL: 0.0%	
			INV TEMP: 31.7C	
Diagnostics> Motor Diagnostics	Motor speed		SPEED:0.0 RPM	
	Motor current		MTR CUR:0.0A RMS	
	Motor utilization		MTR UTIL:0.0%	
	Motor temperature		MTR TEMP:0.00C	
Diagnostics> Encoder Diagnostics	Serial number		SERIAL#xxxxxxxxxxx	
	Resolution		RESOLUTION: 262144	
	Number of turns		NO OF TURNS: 1	
	Encoder temperature		ENC TEMP:33.7C	
	Supply voltage		SUPP VOLT:11.3V	
	Link quality	The link quality attribute indicates how noisy a communication link is and also indicates if there is a communication link already established at the drive end. The LINK QUAL value must always be 100%. Persistent values below 100% indicates a poor feedback ground connection.		LINK QUAL: 100.0%
	Remote signal strength indicator	Similar to Link Quality, RSSI reports the quality of link as seen at the motor end by the encoder. Maintain the RSSI value between 80 and 100%. Persistent values below 80% indicates a poor feedback ground connection.		RSSI: 100.0%
	Accumulated position errors	This is an aggregated number of errors in the primary position feedback channel of DSL feedback.		POS ERRORS: 1
	Channel position errors	This is an aggregated number of errors on a secondary communication channel of the DSL feedback.		CHNL ERRORS: 5
Diagnostics> Safety Inputs	Hardwired input status		1 OFF 2 OFF	1 ON 2 ON
Diagnostics> Safety Diagnostics	Safety state	This attribute indicates the state of the safety supervisor object (refer to Safety Supervisor State on page 310.	SAFETY STATE:CONFIGURING INPUT CONNECTIONS:1 OUTPUT CONNECTIONS:1	SAFETY STATE:RUNNING INPUT CONNECTIONS:1 OUTPUT CONNECTIONS:1
	Input connections	This attribute indicates the number of safety controllers that have an input connection established. The input connection provides the controller with the drive's safety status. The drive supports up to three input connections.		
	Output connections	This attribute indicates the number of safety controllers that have an output connection established. The output connection provides a controller with the ability to control the drive's STO function. The drive allows only one output connection.		

Table 105 - Navigating the Inverter Menu (continued)

Menu/Sub Menu Selections	Attributes	Description	Example Values
Fault Log	Fault text	Fault code as listed in the Kinetix 5700 Fault Codes.xlsx file. (1)	FLT S20 - CONV OVERLOAD FL
	Fault details	The problem as reported in the Kinetix 5700 Fault Codes.xlsx file. (1)	The converter thermal model indicates that the temperature has exceeded the factory set capacity rating of 110%.
	Fault help	The Possible Solution as reported in the Kinetix 5700 Fault Codes.xlsx file. (1)	• Reduce the number of drives in the same bus group • Reduce duty-cycle of commanded motion

(1) For Kinetix 5700 fault code descriptions and possible solutions, see the Knowledgebase Technote: Kinetix 5700 Servo Drives Fault Codes.

Table 106 - Navigating the DC-bus Power Supply Menu

Menu/Sub Menu Selections	Attributes	Description	Example Values
Module Info	Catalog number		2198-P*xxx*
	Firmware revision		FW REV: 1.1.450167
	Hardware revision		HW REV: 1.1
	Serial number		SERIAL#: xxxxxxxxxxx
Diagnostics> Converter Diagnostics	Bus diagnostics		BUS VOLT: 0.0V
			BUS CUR: 0.0A
	Converter diagnostics		CONV UTIL: 0.7%
			CONV TEMP: 31.7C
	Shunt utilization		SHUNT UTIL: 0.0%
Fault Log	Fault text	Fault code as listed in the Kinetix 5700 Fault Codes.xlsx file. (1)	FLT S18 - CONV OVERTEMP FL
	Fault details	The problem as reported in the Kinetix 5700 Fault Codes.xlsx file. (1)	The measured converter temperature has exceeded the factory set temperature limit.
	Fault help	The Possible Solution as reported in the Kinetix 5700 Fault Codes.xlsx file. (1)	Reduce the number of drives in the same bus group.

(1) For Kinetix 5700 fault code descriptions and possible solutions, see the Knowledgebase Technote: Kinetix 5700 Servo Drives Fault Codes.

Table 107 - Navigating the Regenerative Bus Supply Menu

Menu/Sub Menu Selections	Attributes	Description	Example Values
Module Info	Catalog number		2198-RP*xxx*
	Firmware revision		FW REV: 10.1.10500409
	Hardware revision		HW REV: 2.1
	Serial number		SERIAL#: xxxxxxxxxxx
Diagnostics> Converter Diagnostics	Converter diagnostics		CONV UTIL: 0.7%
			CONV TEMP: 31.7C
			SHUNT UTIL: 0.0%
			DC BUS: 0.0V
			IBUS: 0.0A
			CONV UTIL: 0.0%
			CONV TEMP: 22.6C
			PWR OUT: 0.0kW
			IGND:0.0A RMS
			AC FREQ: 0.1Hz
			IL1: 0.0A RMS
			IL2: 0.0A RMS
			IL3: 0.0A RMS
			VL1-2: 0.0V RMS
			VL2-3: 0.0V RMS
			VL3-1: 0.0V RMS
			VL1-N: 0.0V RMS
			VL2-N: 0.0V RMS
			VL3-N: 0.0V RMS
			VBUS REF: 690V
			SYNC STS: 0
			ACT PWR: 0.0kW
			PF: 0.0
			VAC UNBAL: 0.0%
			IAC UNBAL: 0.0%
			PHASE SEQ: 0.0
	Digital Inputs		IN1: OFF
			IN2: OFF
			IN3: OFF
			IN4: OFF
	Digital Outputs		CONT ENABLE: 0
			PWR SUP OK: 0
Fault Log	Fault text	Fault code as listed in the Kinetix 5700 Fault Codes.xlsx file. (1)	FLT S23 – AC PHASE LOSS
	Fault details	The problem as reported in the Kinetix 5700 Fault Codes.xlsx file. (1)	One AC phase has been lost on the AC line to the converter.
	Fault help	The Possible Solution as reported in the Kinetix 5700 Fault Codes.xlsx file. (1)	Check AC input voltage on all phases.

(1) For Kinetix 5700 fault code descriptions and possible solutions, see the Knowledgebase Technote: Kinetix 5700 Servo Drives Fault Codes.

Table 108 - Navigating the iTRAK Power Supply Menu

Menu/Sub Menu Selections	Attributes	Description	Example Values
Module Info	Catalog number		2198T-W25K-ER
	Firmware revision		FW: 6.1.7100254
	Hardware revision		HW REV: 1.1
	Serial number		SERIAL#: xxxxxxxxxxx
Diagnostics> Converter Diagnostics	Bus diagnostics		BUS VOLT: 0.0V
	Output 1 diagnostics		OUT1 VOLT: 0.0V
			OUT1 AMPS: 0.0A
			OUT1 PWR: 0.0kW
			OUT1 UTIL: 0.0%
	Output 2 diagnostics		OUT2 VOLT: 0.0V
			OUT2 AMPS: 0.0A
			OUT2 PWR: 0.0kW
			OUT2 UTIL: 0.0%
	Converter diagnostics		TOTAL PWR: 0.0kW
Fault Log	Fault text	Fault code as listed in the Kinetix 5700 Fault Codes.xlsx file. (1)	FLT S38 - FUSE BLOWN
	Fault details	The problem as reported in the Kinetix 5700 Fault Codes.xlsx file. (1)	The internal DC-bus power fuse is blown
	Fault help	The Possible Solution as reported in the Kinetix 5700 Fault Codes.xlsx file. (1)	Return drive for repair if fault continues

(1) For Kinetix 5700 fault code descriptions and possible solutions, see the Knowledgebase Technote: Kinetix 5700 Servo Drives Fault Codes.

Setup Screens

The setup screens provide the means of changing drive settings, for example, the IP address. Press one of the setup buttons to access the setup screens.

You can use the soft menu items and navigation buttons to view the information and make changes.

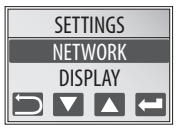

Press ↵ to validate your changes:

- If the change is invalid, the value doesn't change.
- If the change is valid, an asterisk appears next to the changed attribute.

IMPORTANT You must cycle control power to make network configuration changes persistent. In this example, the IP address was changed. The change takes affect and the asterisk disappears after control power is cycled.

Display configuration changes take effect immediately.

Table 109 - Navigating the Inverter Settings Menu

Settings Menu Selections	Sub Menu Selections	Attributes	Default	Description
Protected Mode	Network Config	ENABLED DISABLED	ENABLED	When Enabled (default), network configuration changes are not possible when a controller connection is open.
	Device Config	ENABLED DISABLED	ENABLED	When Enabled (default), only attribute writes are possible when a controller connection is open.
Network	->Static IP (1)	IP address	192.168.1.1	Indicates current IP address
		Subnet mask	255.255.255.000	Indicates current subnet mask
		Gateway	192.168.001.254	Indicates current gateway
	DHCP	On		Turns DHCP on
		Off		Turns DHCP off
Display	Backlight Timeout	30 sec…NEVER (NEVER=no timeout period, the backlight is always on)	-> 3 min (1)	Sets backlight timeout period of the display
	Cyclic Data Select (2)	->DC BUS (1)		DC bus voltage
		INV UTIL		Inverter utilization in percent
		INV TEMP		Inverter temperature in °C
		MOTOR UTIL		Motor utilization in percent
		SPEED		RPM
		OUT PWR		Output power in watts
		OUT FREQ		Output frequency in hertz
		OUT CUR		Output current in amps
	Set Contrast	-10…+10	0	Contrast setting of the display
Factory Reset	Reset Defaults?	Are you sure?		Resets drive to factory default state
Safety	Reset Ownership	Are you sure?		Resets safety ownership (reset fails after 30 seconds)
Web	Enabled			Enables the web server
	->Disabled			Disables the web server

(1) An arrow (->) appears in front of the chosen attribute indicating that this attribute is currently configured. This is also the factory default setting.
(2) The DC bus voltage is one of several cyclic data attributes. You can select any of the Cyclic Data Select attributes to be displayed on the Home screen.

Table 110 - Navigating the DC-bus Power Supply Settings Menu

Settings Menu Selections	Sub Menu Selections	Attributes	Default	Description
Protected Mode	Reset	ENABLED DISABLED	ENABLED	When Enabled (default), identity object or safety resets are not possible when a controller connection is open.
	Network Config	ENABLED DISABLED	ENABLED	When Enabled (default), network configuration changes are not possible when a controller connection is open.
	Flash Update	ENABLED DISABLED	ENABLED	When Enabled (default), firmware updates are not possible when a controller connection is open.
	Device Config	ENABLED DISABLED	ENABLED	When Enabled (default), only attribute writes are possible when a controller connection is open.
Network	->Static IP (1)	IP address	192.168.1.1	Indicates current IP address
		Subnet mask	255.255.255.000	Indicates current subnet mask
		Gateway	192.168.001.001	Indicates current gateway
	DHCP	On		Turns DHCP on
		Off		Turns DHCP off
Display	Backlight Timeout	30 sec…NEVER (NEVER=no timeout period, the backlight is always on)	-> 3 min (1)	Sets backlight timeout period of the display
	Cyclic Data Select (2)	->DC BUS (1)		DC bus voltage
		CONV UTIL		Converter utilization in percent
		CONV TEMP		Converter temperature in °C
		SHUNT UTIL		Shunt utilization in percent
		OUT PWR		Output power in watts
		DC BUS CUR		Output current in amps
	Set Contrast	-10…+10	0	Contrast setting of the display

(1) An arrow (->) appears in front of the chosen attribute indicating that this attribute is currently configured. This is also the factory default setting.
(2) The DC bus voltage is one of several cyclic data attributes. You can select any of the Cyclic Data Select attributes to be displayed on the Home screen.

Table 111 - Navigating the Regenerative Bus Supply Settings Menu

Settings Menu Selections	Sub Menu Selections	Attributes	Default	Description
Protected Mode	Reset	ENABLED DISABLED	ENABLED	When Enabled (default), identity object or safety resets are not possible when a controller connection is open.
	Network Config	ENABLED DISABLED	ENABLED	When Enabled (default), network configuration changes are not possible when a controller connection is open.
	Flash Update	ENABLED DISABLED	ENABLED	When Enabled (default), firmware updates are not possible when a controller connection is open.
	Device Config	ENABLED DISABLED	ENABLED	When Enabled (default), only attribute writes are possible when a controller connection is open.
Network	->Static IP (1)	IP address	192.168.1.1	Indicates current IP address
		Subnet mask	255.255.255.000	Indicates current subnet mask
		Gateway	192.168.001.001	Indicates current gateway
	DHCP	On		Turns DHCP on
		Off		Turns DHCP off
Display	Backlight Timeout	30 sec…NEVER (NEVER=no timeout period, the backlight is always on)	-> 3 min (1)	Sets backlight timeout period of the display
	Cyclic Data Select (2)	-> DC BUS		DC bus voltage
		CONV UTIL		Converter utilization in % Rated
		CONV TEMP		Converter temperature in °C
		PWR OUT		Output power in Watts
		IBUS		Output current in Amps
		AC FREQ		Input frequency in Hz
		IAC LINE		AC Line current in Amps
		VAC LINE		AC Line voltage in Volts
		VBUS REF		Bus Voltage Reference in Volts
		ACTV PWR		Active power in Watts
		REACT PWR		Reactive power in kVAR
		PF		Power Factor
		ACTV IREF		Active Current reference in % Rated
		REACT IREF		Reactive current reference in % Rated
	Set Contrast	-10…+10	0	Contrast setting of the display
Web		ENABLED DISABLED	ENABLED	When Enabled (default), the drive's diagnostic webpage is accessible.

(1) An arrow (->) appears in front of the chosen attribute indicating that this attribute is currently configured. This is also the factory default setting.
(2) The DC bus voltage is one of several cyclic data attributes. You can select any of the Cyclic Data Select attributes to be displayed on the Home screen.

Table 112 - Navigating the iTRAK Power Supply Settings Menu

Settings Menu Selections	Sub Menu Selections	Attributes	Default	Description
Network	Static IP (3)	IP address	192.168.1.1	Indicates current IP address
		Subnet mask	255.255.255.000	Indicates current subnet mask
		Gateway	192.168.001.254	Indicates current gateway
	->DHCP (4)	->On (4) (3)		Turns DHCP on
		Off (3)		Turns DHCP off
Display	Backlight Timeout	30 sec…NEVER (NEVER=no timeout period, the backlight is always on)	-> 3 min (4)	Sets backlight timeout period of the display
	Cyclic Data Select (5)	-> BUS VOLT (4)		DC bus voltage in volts
		OUT1 VOLT		Output 1 voltage in volts
		OUT1 AMPS		Output 1 current in amps
		OUT1 PWR		Output 1 power in kilowatts
		OUT1 UTIL		Output 1 utilization in percent
		OUT2 VOLT		Output 2 voltage in volts
		OUT2 AMP		Output 2 current in amps
		OUT2 PWR		Output 2 power in kilowatts
		OUT2 UTIL		Output 2 utilization in percent
		TOTAL PWR		Total power in kilowatts
	Set Contrast	-10…+10	0	Contrast setting of the display
Web	Enabled			Enables the web server
	->Disabled (4)			Disables the web server
Protect (1) (2)	Reset	Disabled		Disables drive reset protection
		->Enabled (4)		Enables drive reset protection
	Network Config	Disabled		Disables network configuration protection
		->Enabled (4)		Enables network configuration protection
	Flash Update	Disabled		Disables flash update protection
		->Enabled (4)		Enables flash update protection
	Device Config	Disabled		Disables device configuration protection
		->Enabled (4)		Enables device configuration protection
Standalone (1)	->Disabled			Disables standalone operation
	Enabled (4)			Enables standalone operation

(1) Settings menu items available for the iTRAK power supply in drive firmware revision 12.001 and later.
(2) Protected mode settings prevent the corresponding operation from being performed when Class 1 CIP™ connections are open.
(3) The default network setting was changed from Static IP to DHCP in drive firmware revision 12.001 to comply with EtherNet/IP™ standards
(4) An arrow (->) appears in front of the chosen attribute indicating that this attribute is currently configured. This is also the factory default setting.
(5) The DC bus voltage is one of several cyclic data attributes. You can select any of the Cyclic Data Select attributes to be displayed on the Home screen.

IMPORTANT Standalone mode was added to the iTRAK® power supply in drive firmware revision 12.001 to provide backward compatibility with iTRAK medium frame systems. Enable Standalone operation only when providing power to iTRAK medium frame systems.

Startup Sequence

On initial powerup, the drive performs a self test. Upon successful completion, the drive firmware revision is displayed.

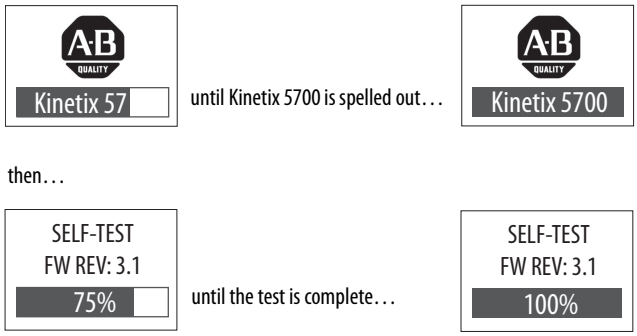

Next, the CIP axis state, the IP address, and the default cyclic data attribute (in this example DC-bus voltage) appears. In addition, the setup and menu soft keys are displayed. This is the Home screen.

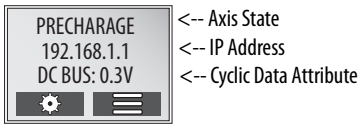

In this example PRECHARGE is the axis state attribute. Table 113 lists the other axis states and their descriptions.

Table 113 - CIP Axis States on the Home Screen

Axis State	Description
STANDBY	The drive is waiting to receive configuration information from the controller.
CONNECTING	The drive is trying to establish communication with the EtherNet/IP controller.
CONFIGURING	The drive is receiving configuration information from the controller.
SYNCING	The drive is waiting for a successful Group Sync service.
STOPPED	The drive has DC bus ready, but the control loops are not enabled.
PRECHARGE	The drive is ready for mains input power.
STARTING	The drive is enabled and checking various conditions before entering the RUNNING or TESTING state. For example, the drive checks the Brake Release delay time during the STARTING state.
RUNNING	• The drive is enabled, configured with an active control mode, and actively tracking a command. • The drive is configured for No Control and is fully operational.
TESTING	The drive is actively executing a test procedure, for example, a hookup test.
STOPPING	The drive is decelerating to a stop as the result of a disable.
ABORTING	The drive is decelerating to a stop as the result of a fault or an abort request.
MAJOR FAULTED	The drive is faulted due to an existing or past fault condition.
START INHIBITED	The drive has an active condition that inhibits it from being enabled.
SHUTDOWN	The drive has been shut down.

For more information on the 2198-RP*xxx* regenerative bus supply CIP axis states, see Regenerative Bus Supply Sequence Operation on page 413.

Configure the Drive

You can include the drive in your Studio 5000 Logix Designer® application by adding it to a configured EtherNet/IP module or controller under the I/O configuration tree. After setting network parameters, you can view the drive status information in Studio 5000® environment and use it in your Logix Designer application.

Set the Network Parameters

You must program network parameters by using the LCD display.

1. From the LCD display, select SETUP>NETWORK and choose between STATIC IP and DHCP.

   The default setting is STATIC IP.

2. If STATIC IP, then press ↵ to configure the following parameters:
   - IP address
   - Gateway
   - Subnet mask

Settings are stored in nonvolatile memory. IP addressing can also be changed through the Module Configuration dialog box in RSLinx® software. Changes to the IP addressing take effect after power is cycled. The drive is factory programmed to static IP address of 192.168.1.1.

Refer to Setup Screens on page 188 for help setting the network parameters.

Studio 5000 Logix Designer

For help using the Studio 5000 Logix Designer application as it applies to configuring the ControlLogix® or CompactLogix™ controllers, refer to Additional Resources on page 13.

Version History

Each release of the Studio 5000 Logix Designer application makes possible the configuration of additional Allen-Bradley® motors, actuators, power supplies, and drive features not available in previous versions.

IMPORTANT To configure additional motors, actuators, and drive features with your Kinetix 5700 servo drive, you must have drive firmware 4.001 or later. Refer to Table 114 to determine if you need to install the Kinetix 5700 Add-on Profile.

Table 114 - AOP Installation Requirement

Drive Module Cat. No.	Drive Firmware Revision	Logix Designer Application Version	Kinetix 5700 AOP Needed?
2198-*xxxx*-ERS3 (series A)	4.001	26.00 or 27.00	Yes
		28.00 or later	No
	5.001	26.00, 27.00, 28.00	Yes
		29.00 or later	No
	7.001 or later (2)	29.00 or later	No
2198-*xxxx*-ERS3 (series B) 2198-*xxxx*-ERS4	9.001 or later (2)	31.00 or later	No
2198-RP*xxx*	10.001 or later (2)	32.00 or later	No
CIP Security™ (1) for: 2198-P*xxx*, 2198-RP*xxx* 2198-*xxxx*-ERS3 (series B) 2198-*xxxx*-ERS4	11.001 or later	32.00	Yes
2198T-W25K-ER	12.001 or later	33.00	Yes
2198-*xxxx*-ERS3 (series B) 2198-*xxxx*-ERS4	13.001 or later (2)	33.00 or later	No

(1) For information on CIP Security, see CIP Security on page 12.
(2) These firmware enhancements are available only with the applicable Studio 5000 Logix Designer, version. There is no AOP available for download.

Install the Kinetix 5700 Add-On Profile

Download Add-On profiles (AOP) from the Product Compatibility Download Center (PCDC) website: http://compatibility.rockwellautomation.com/Pages/home.aspx.

Follow these steps to download the Kinetix 5700 Add-On profile.

1. Go to the Product Compatibility Download Center.

   The Compatibility & Downloads webpage appears.

2. Click Download.

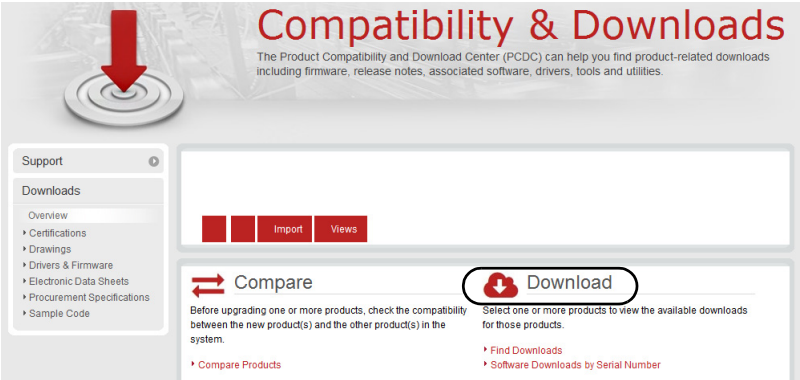

3. Enter Kinetix 5700 in the Search PCDC window.

4. Click the appropriate firmware revision and follow prompts to download.
5. Extract the AOP zip file and run Setup.

Configure the Logix 5000 Controller

These procedures assume that you have wired your Kinetix 5700 drive system. In this example, the GuardLogix® 5580 safety controller and Compact GuardLogix 5380 controller dialog boxes are shown.

Follow these steps to configure the controller.

1. Apply power to your controller and open your Logix Designer application.

2. From the Create menu, choose New Project.

   The New Project dialog box appears.

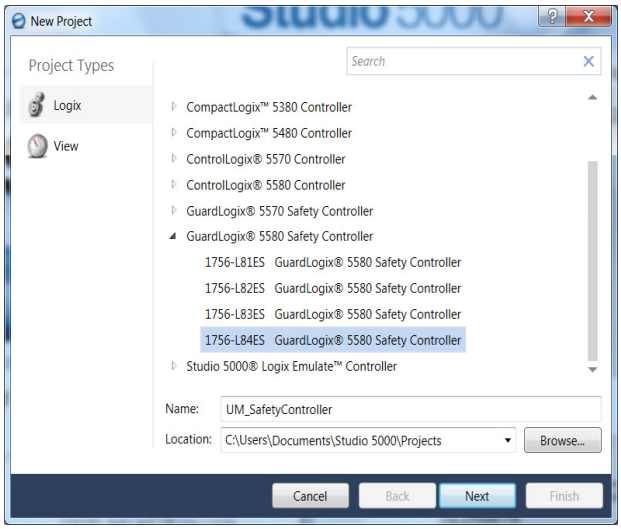

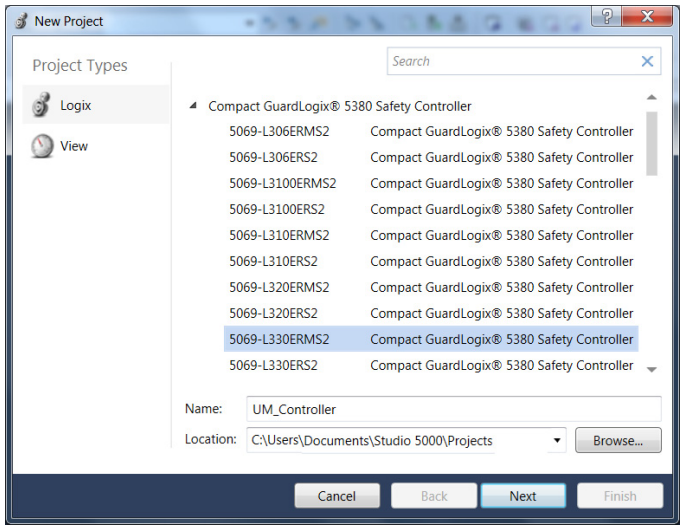

IMPORTANT If you are configuring a safety application, you must use a GuardLogix or Compact GuardLogix safety controller.

If you are configuring a 2198-*xxxx*-ERS4 inverter in a safety application, you must use a GuardLogix 5580 or Compact GuardLogix 5380 safety controller.

In this example, the typical dialog boxes for ControlLogix and GuardLogix 5580 controllers and CompactLogix 5380 controllers with embedded Ethernet are shown.

Follow these steps to configure your Logix 5000 controller.

1. Expand the Logix 5000 controller family and select your controller.
2. Type the file Name.
3. Click Next.

   The New Project dialog box appears.

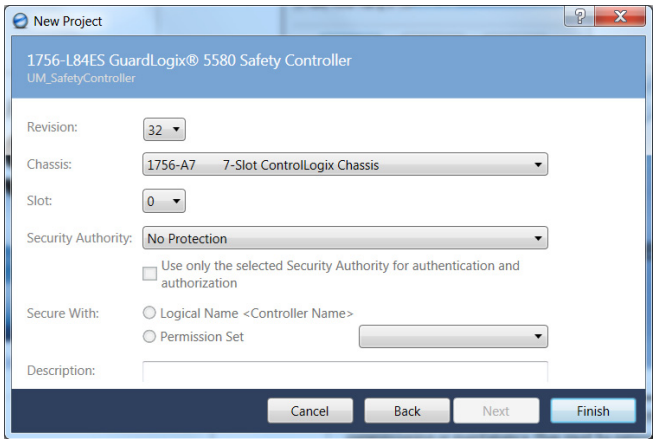

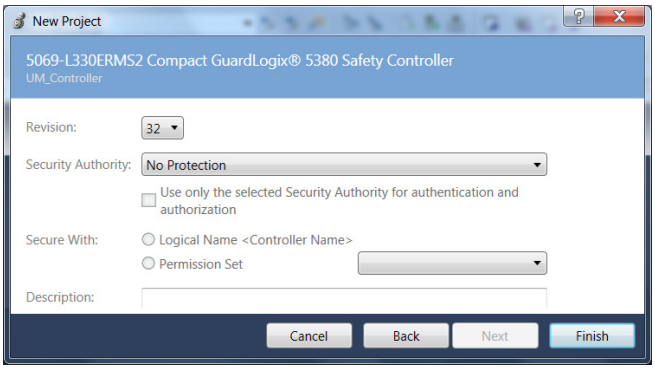

4. From the Revision pull-down menu, choose your software revision.

IMPORTANT To configure Kinetix 5700 drive systems, you must be using the Logix Designer application, version 26.00 or later.

5. Click Finish.

   The new controller appears in the Controller Organizer under the I/O Configuration folder.

   Controller Organizer with Compact GuardLogix 5380 controller.

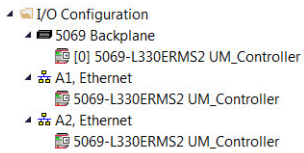

   Controller Organizer with GuardLogix 5580 controller.

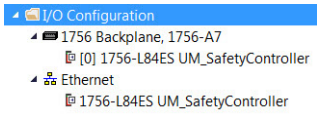

6. Configure the Logix 5000 controller.

   Your new Logix 5000 controller appears under the I/O Configuration folder in the Controller Organizer.

   In this example, a GuardLogix 5580 controller with 1756-EN2TR communication module is used.

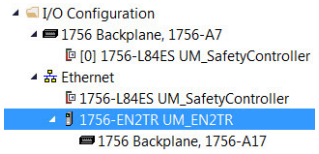

7. From the Edit menu, choose Controller Properties.

   The Controller Properties dialog box appears.

8. Click the Date/Time tab.

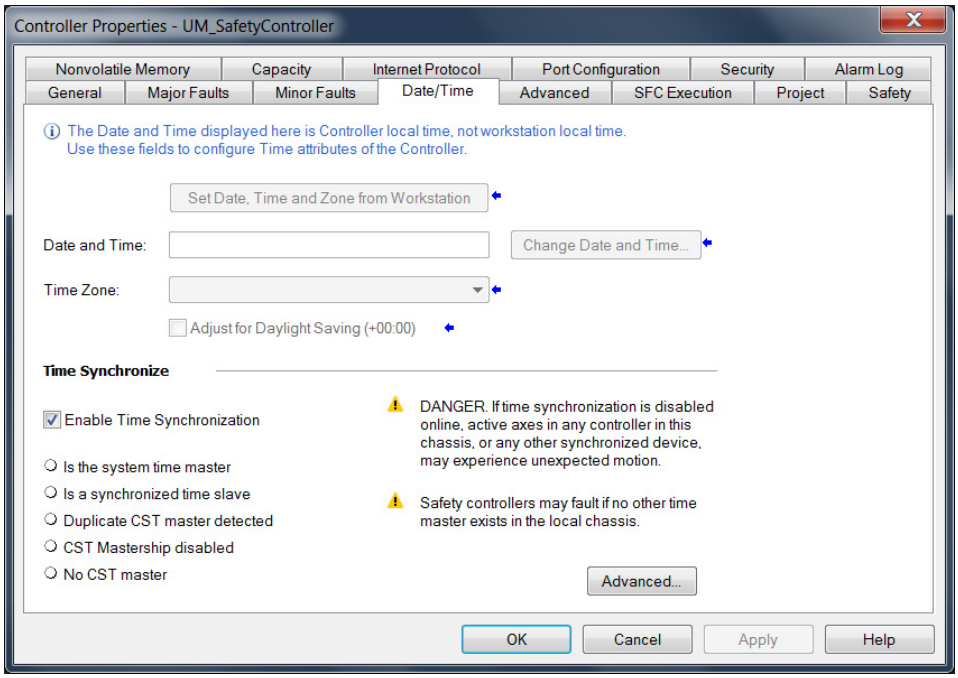

9. Check Enable Time Synchronization.

   The motion modules set their clocks to the module you assign as the Grandmaster.

> **IMPORTANT** Check Enable Time Synchronization for all controllers that participate in CIP Sync™. The overall CIP Sync network automatically promotes a Grandmaster clock, unless the priority is set in Advanced.

10. Click OK.

Configure the Kinetix 5700 Drive Modules

IMPORTANT To configure Kinetix 5700 drive systems, you must be using the Logix Designer application, version 26.00 or later.

IMPORTANT When the iTRAK power supply is configured for Standalone operation, the Logix Designer application is not used. For more information, see iTRAK System with TriMax Bearings User Manual, publication 2198T-UM002.

Configure the DC-bus Power Supply

Follow these steps to configure the DC-bus power supply.

1. Below the controller you just created, right-click Ethernet and choose New Module.

   The Select Module Type dialog box appears.

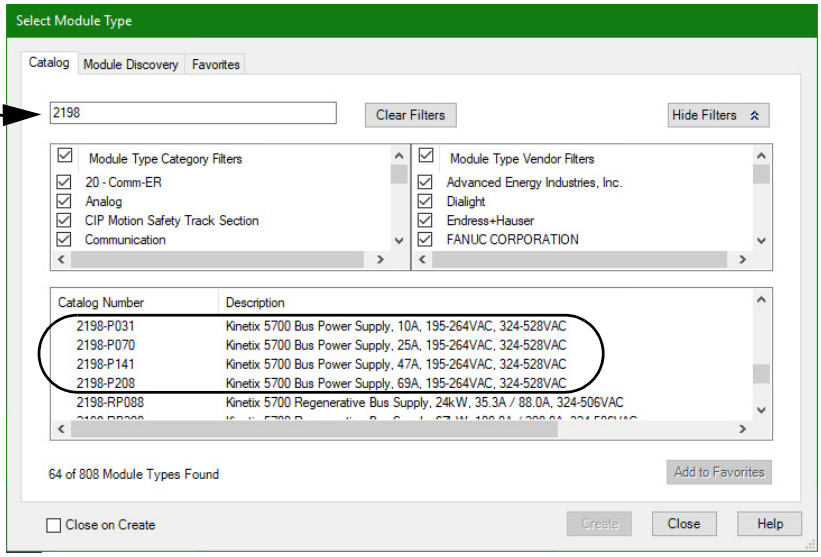

2. By using the filters, check Motion and Allen-Bradley, and select your 2198-P*xxx* DC-bus power supply as appropriate for your hardware configuration.

3. Click Create.

The New Module dialog box appears.

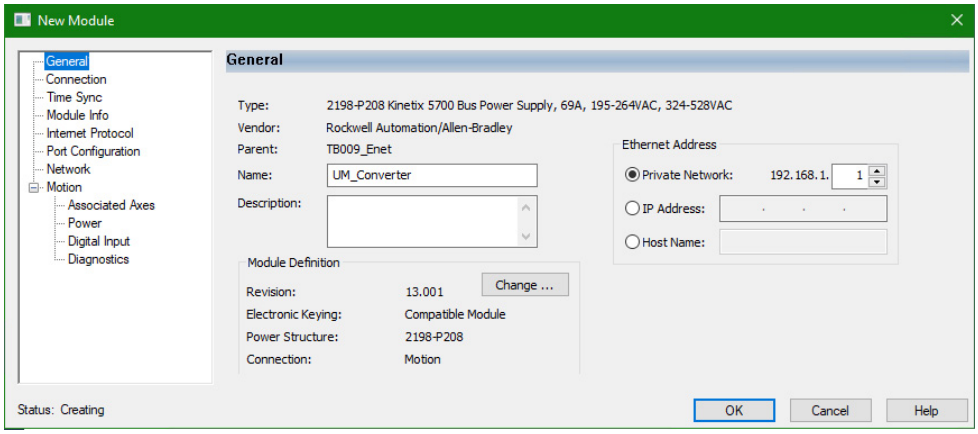

4. Configure the new module.
   a. Type the module Name.
   b. Select an Ethernet Address option.
      In this example, the Private Network address is selected.
   c. Enter the address of your 2198-P*xxx* DC-bus power supply.
      In this example, the last octet of the address is 1.
5. Click the Power category.

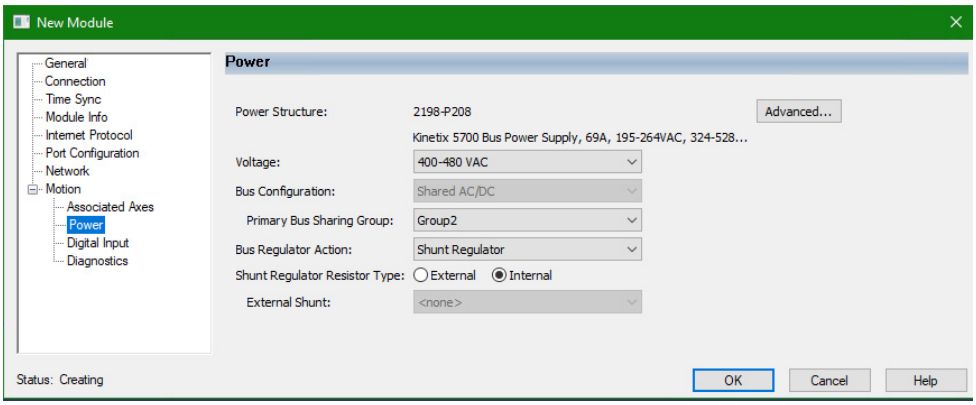

IMPORTANT The Logix Designer application enforces shared-bus configuration rules for Kinetix 5700 drives.

6. From the pull-down menus, choose the power options appropriate for your hardware configuration.

Attribute	Menu	Description
Bus Configuration	Shared AC/DC (1)	Applies to 2198-P*xxx* DC-bus power supply (converter) modules.
Bus Sharing Group (2)	• Group1 • Group2 • Group3…	Applies to any bus-sharing configuration.
Bus Regulator Action	Disabled	Disables the internal shunt resistor and external shunt option.
	Shunt Regulator	Enables the internal and external shunt options.
Shunt Regulator Resistor Type	Internal	Enables the internal shunt (external shunt option is disabled).
	External	Enables the external shunt (internal shunt option is disabled).
External Shunt (3)	• None • 2198-R004, 2198-R014 • 2198-R031, 2198-R127	Selects external shunt option. Only the shunt catalog number intended for the specific DC-bus power supply is shown.

(1) Shared AC/DC bus configuration is the default selection for DC-bus power supplies.
(2) For more information on bus-sharing groups, refer to Understand Bus-sharing Group Configuration on page 265.
(3) Refer to the Kinetix Servo Drives Specifications Technical Data, publication KNX-TD003, for more information on the Bulletin 2198 external passive shunt resistors.

ATTENTION: To avoid damage to equipment all modules physically connected to the same shared-bus connection system must be part of the same Bus Sharing Group in the Logix Designer application.

7. Click OK to close the New Module dialog box.
8. Your 2198-P*xxx* DC-bus power supply appears in the Controller Organizer under the Ethernet network in the I/O Configuration folder.

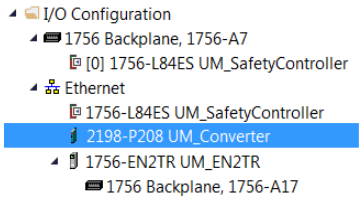

9. Click Close to close the Select Module Type dialog box.
10. Right-click the DC-bus power supply you just created in the Controller Organizer and choose Properties.

    The Module Properties dialog box appears.

    TIP To configure the remaining DC-bus power supply properties, you must close the New Module dialog box and reopen it as the Module Properties dialog box.

11. Click the Digital Input category.

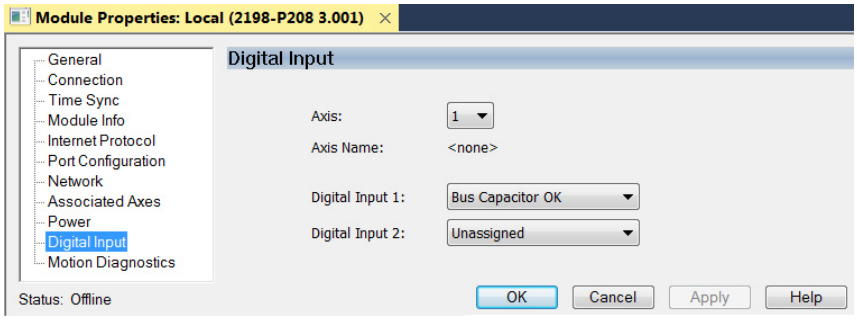

12. From the Digital Input pull-down menu choose Bus Capacitor OK or Shunt Thermal Switch OK to monitor your capacitor module status or the shunt thermal switch, respectively, depending on your application.

    In this example, Bus Capacitor OK is chosen.

13. Click the Associated Axes category.

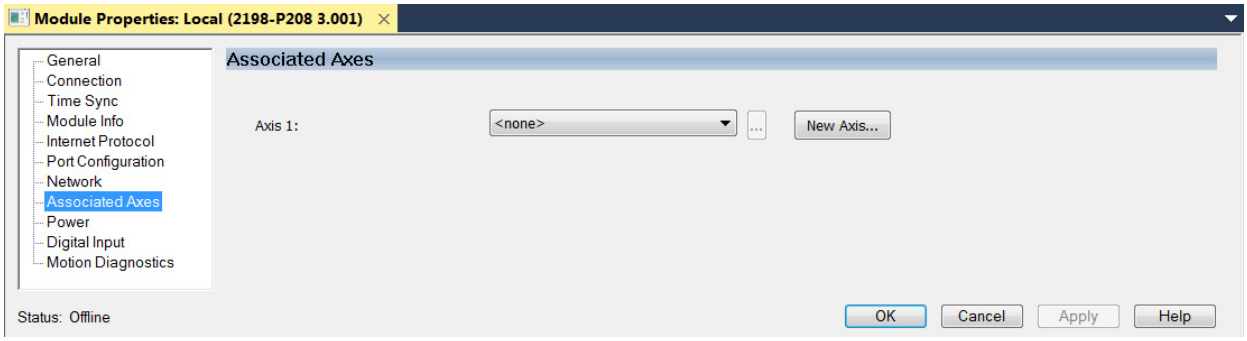

14. Click New Axis.

    The New Tag dialog box appears.

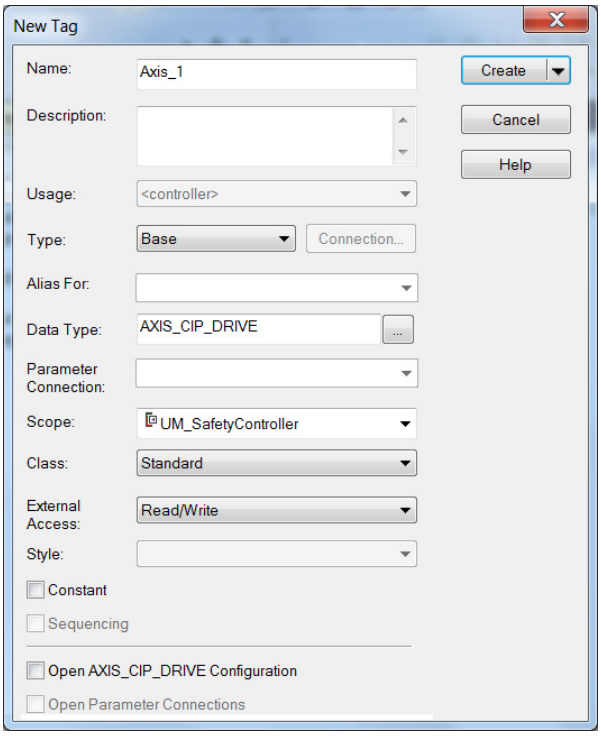

15. Type the axis Name.

    AXIS_CIP_DRIVE is the default Data Type.

16. Click Create.

The axis (Axis_1 in this example) appears in the Controller Organizer under Motion Groups> Ungrouped Axes and is assigned as Axis 1.

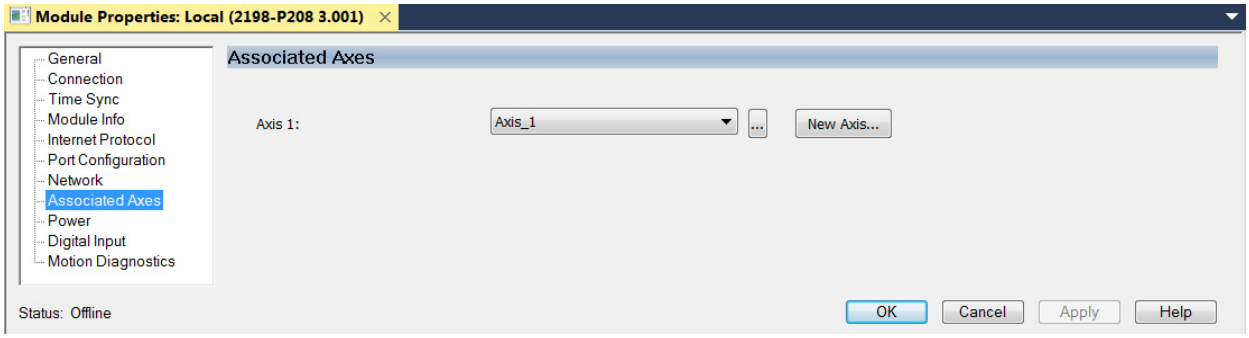

17. Click Apply.
18. Repeat step 1 through step 17 if you have more than one 2198-P208 DC-bus power supply.

Configure the Regenerative Bus Supply

Follow these steps to configure the regenerative bus supply.

1. Below the controller you just created, right-click Ethernet and choose New Module.

   The Select Module Type dialog box appears.

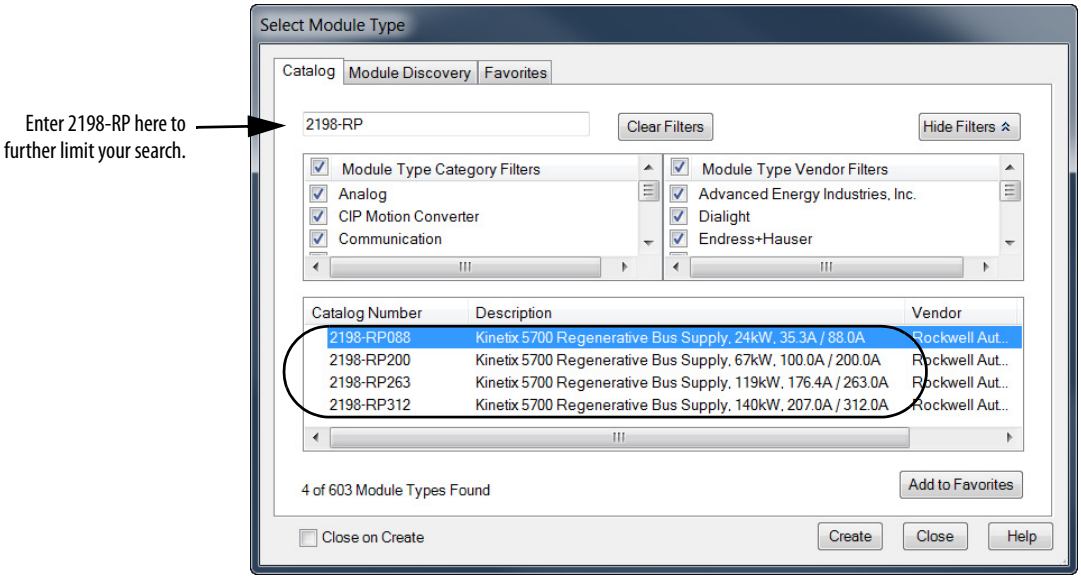

2. By using the filters, check Motion and Allen-Bradley, and select your 2198-RP*xxx* regenerative bus supply as appropriate for your hardware configuration.
3. Click Create.

The New Module dialog box appears.

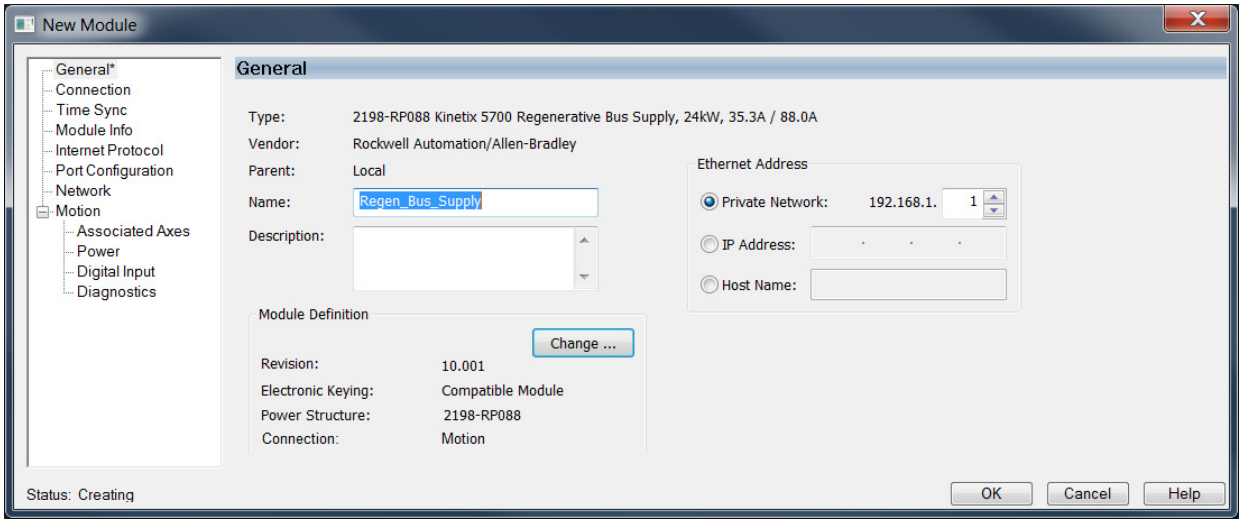

4. Configure the new module.
   a. Type the module Name.
   b. Select an Ethernet Address option.
      In this example, the Private Network address is selected.
   c. Enter the address of your 2198-RP*xxx* regenerative bus supply.
      In this example, the last octet of the address is 1.
5. Click the Power category.

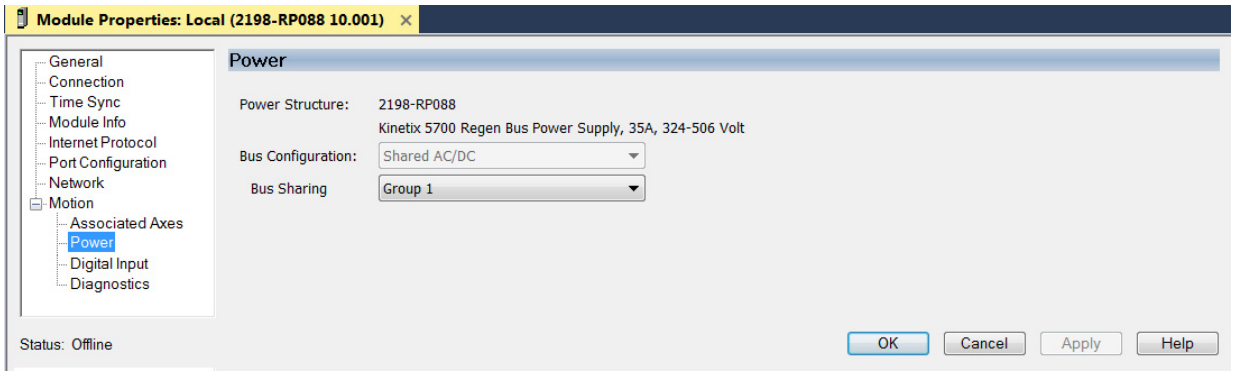

IMPORTANT The Logix Designer application enforces shared-bus configuration rules for Kinetix 5700 drives.

6. From the pull-down menus, choose the power options appropriate for your hardware configuration.

Attribute	Menu	Description
Bus Configuration	Shared AC/DC (1)	Applies to 2198-RP*xxx* regenerative bus supply modules.
Bus Sharing Group (2)	• Group1 • Group2 • Group3…	Applies to any bus-sharing configuration.

(1) Shared AC/DC bus configuration is the default selection for regenerative bus supplies.
(2) For more information on bus-sharing groups, refer to Understand Bus-sharing Group Configuration on page 265.

ATTENTION: To avoid damage to equipment all modules physically connected to the same shared-bus connection system must be part of the same Bus Sharing Group in the Logix Designer application.

7. Click OK to close the New Module dialog box.
8. Your 2198-RP*xxx* regenerative bus supply appears in the Controller Organizer under the Ethernet network in the I/O Configuration folder.

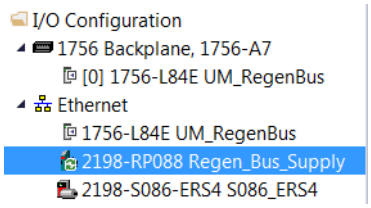

9. Click Close to close the Select Module Type dialog box.
10. Right-click the regenerative bus supply you just created in the Controller Organizer and choose Properties.

    The Module Properties dialog box appears.

    TIP To configure the remaining regenerative bus supply properties, you must close the New Module dialog box and reopen it as the Module Properties dialog box.

11. Click the Digital Input category.

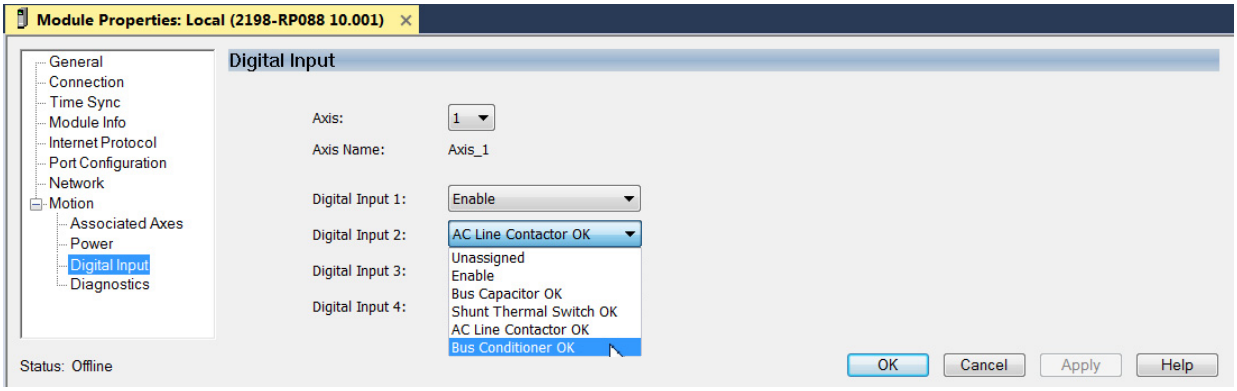

12. From the Digital Input pull-down menu choose Bus Conditioner OK or AC Line Contactor OK to monitor your DC-bus conditioner module status or the M1 contactor status, respectively, depending on your application.

    In this example, Bus Capacitor OK is chosen.

13. Click the Associated Axes category.

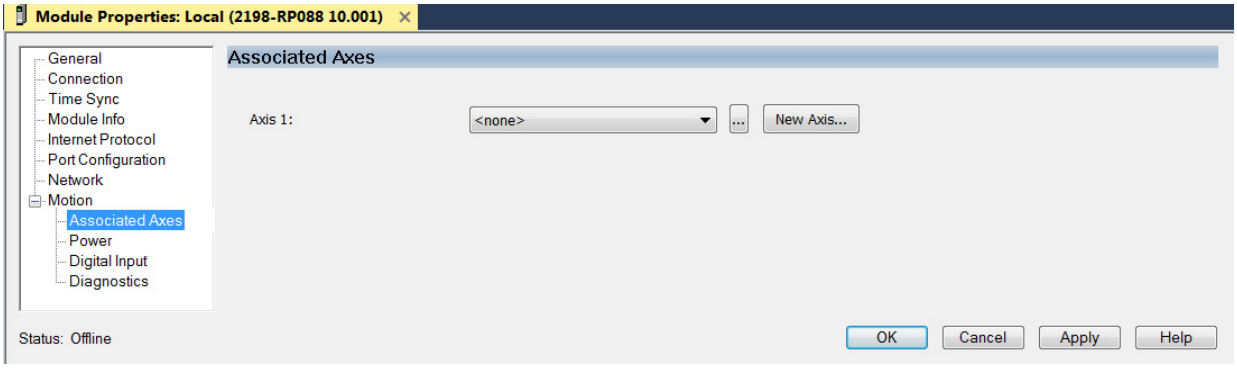

14. Click New Axis.

The New Tag dialog box appears.

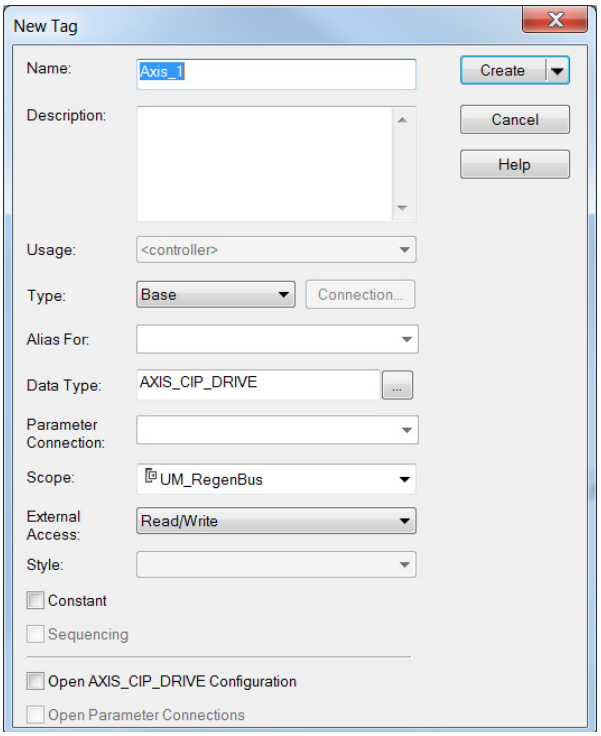

15. Type the axis Name.

AXIS_CIP_DRIVE is the default Data Type.

16. Click Create.

The axis (Axis_1 in this example) appears in the Controller Organizer under Motion Groups> Ungrouped Axes and is assigned as Axis 1.

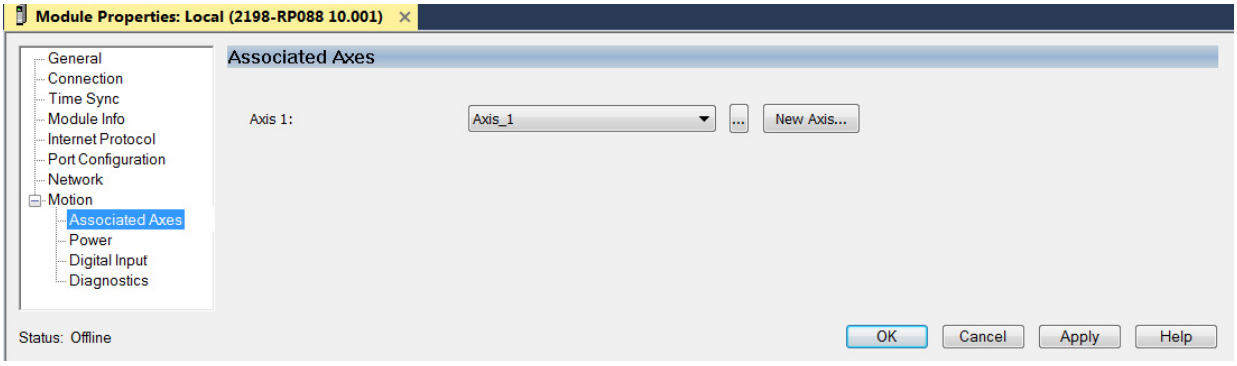

17. Click Apply.
18. Repeat step 1 through step 17 if you have more than one 2198-RP*xxx* regenerative bus supply.

Configure the iTRAK Power Supply

Follow these steps to configure the iTRAK power supply.

1. Below the controller you just created, right-click Ethernet and choose New Module.

   The Select Module Type dialog box appears.

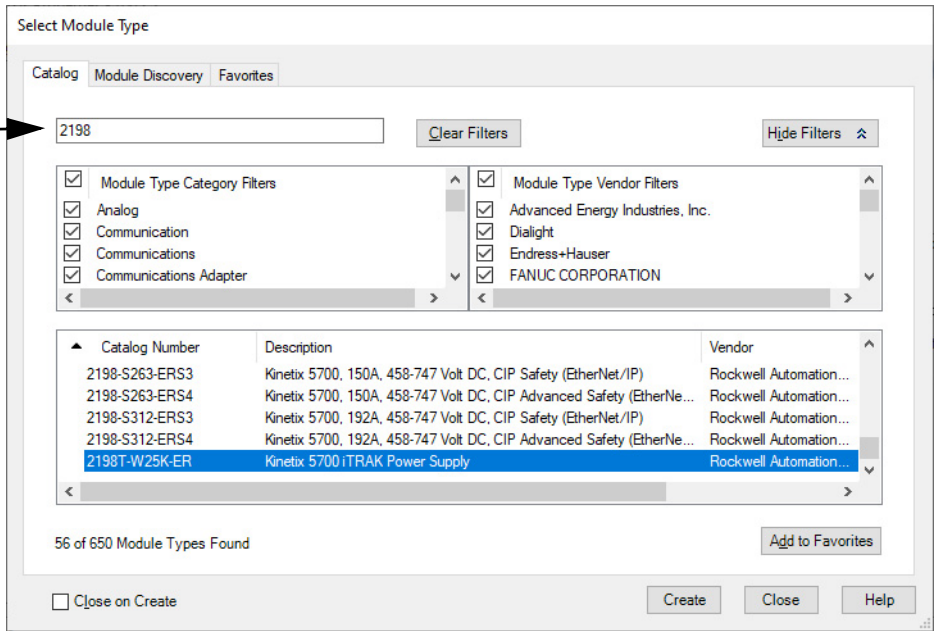

2. Select your 2198T-W25K-ER power supply.
3. Click Create.

The New Module dialog box appears.

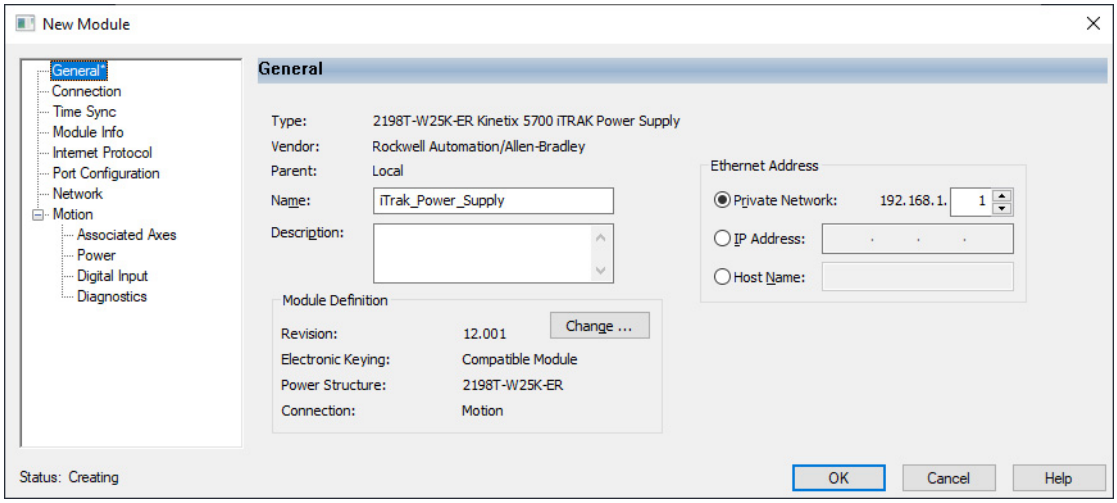

4. Configure the new module.
   a. Type the module Name.
   b. Select an Ethernet Address option.
      In this example, the Private Network address is selected.
   c. Enter the address of your iTRAK power supply.
      In this example, the last octet of the address is 1.
5. Click the Power category.

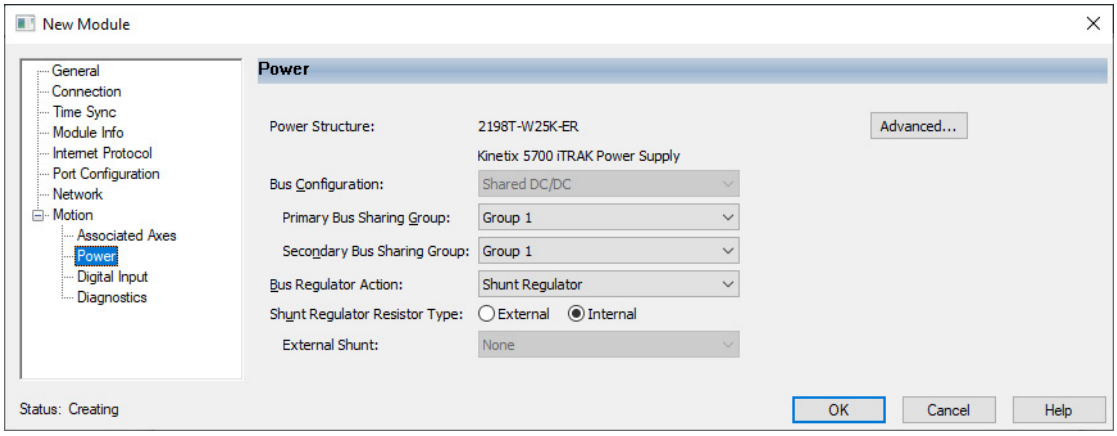

IMPORTANT The Logix Designer application enforces shared-bus configuration rules for Kinetix 5700 drives.

6. From the pull-down menus, choose the power options appropriate for your hardware configuration.

Attribute	Menu	Description
Bus Configuration	Shared DC/DC (1)	Applies to iTRAK power supply modules.
Primary Bus-sharing Group (2)	• Group1 • Group2 • Group3…	Selects the Bus Sharing Group shared with the AC/DC converter suppling DC voltage to the iTRAK power supply.
Secondary Bus-sharing Group		Selects the Bus Sharing Group shared with the iTRAK Small Frame modules connected to the iTRAK power supply output.
Bus Regulator Action	Disabled	Disables the internal shunt resistor and external shunt option.
	Shunt Regulator	Enables the internal and external shunt options.
Shunt Regulator Resistor Type	Internal	Enables the internal shunt (external shunt option is disabled).
	External	Enables the external shunt (internal shunt option is disabled).
External Shunt	None (3)	Selects external shunt option.

(1) Shared DC/DC bus configuration is the default selection for iTRAK power supplies.
(2) For more information on bus-sharing groups, refer to Understand Bus-sharing Group Configuration on page 265. For more information on primary and secondary bus-sharing groups, see iTRAK 5730 System User Manual, publication 2198T-UM003.
(3) The iTRAK power supply does not support external shunts.

ATTENTION: To avoid damage to equipment all modules physically connected to the same shared-bus connection system must be part of the same Bus Sharing Group in the Logix Designer application.

7. Click OK to close the New Module dialog box.
8. Your iTRAK power supply appears in the Controller Organizer under the Ethernet network in the I/O Configuration folder.

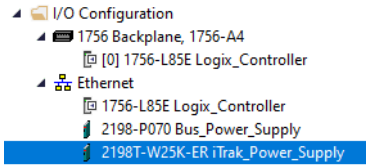

9. Click Close to close the Select Module Type dialog box.
10. Right-click the iTRAK power supply you just created in the Controller Organizer and choose Properties.

    The Module Properties dialog box appears.

    TIP To configure the remaining iTRAK power supply properties, you must close the New Module dialog box and reopen it as the Module Properties dialog box.

11. Click the Digital Input category.

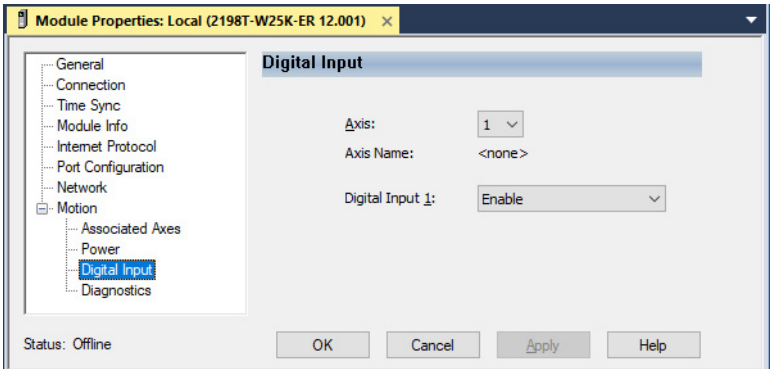

12. From the Digital Input pull-down menu choose Enable (default) to monitor an external enable input signal or choose Unassigned depending on your application.

    In this example, Enable is chosen.

13. Click the Associated Axes category.

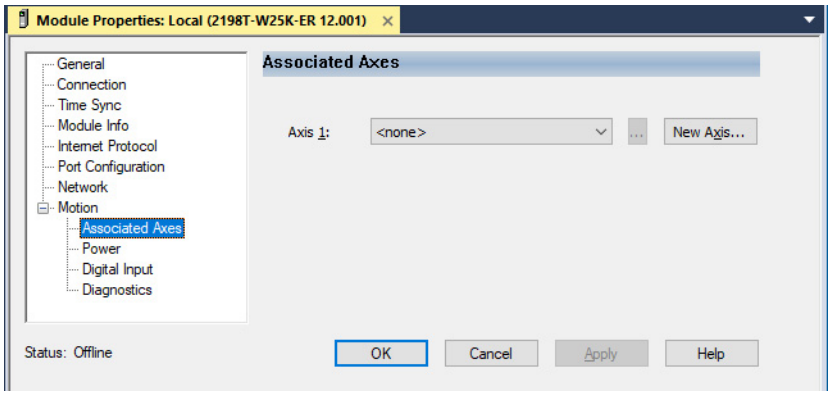

14. Click New Axis.

The New Tag dialog box appears.

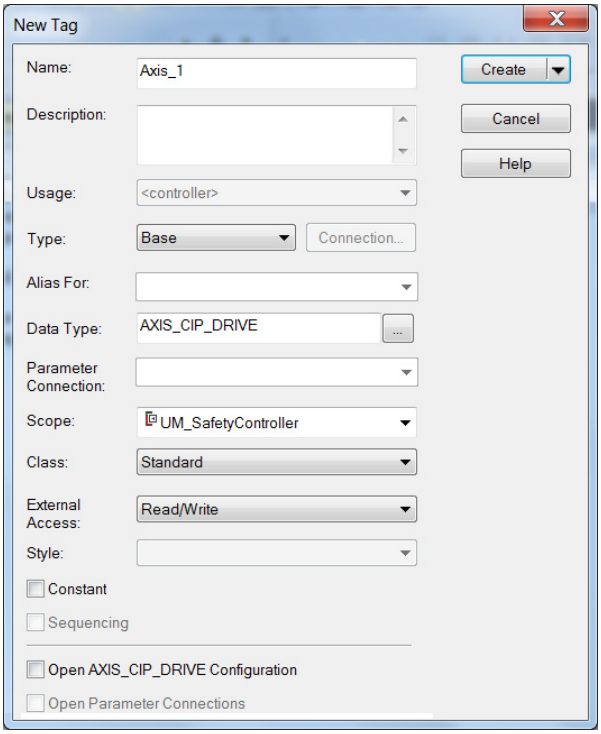

15. Type the axis Name.

AXIS_CIP_DRIVE is the default Data Type.

16. Click Create.

The axis (Axis_1 in this example) appears in the Controller Organizer under Motion Groups> Ungrouped Axes and is assigned as Axis 1.

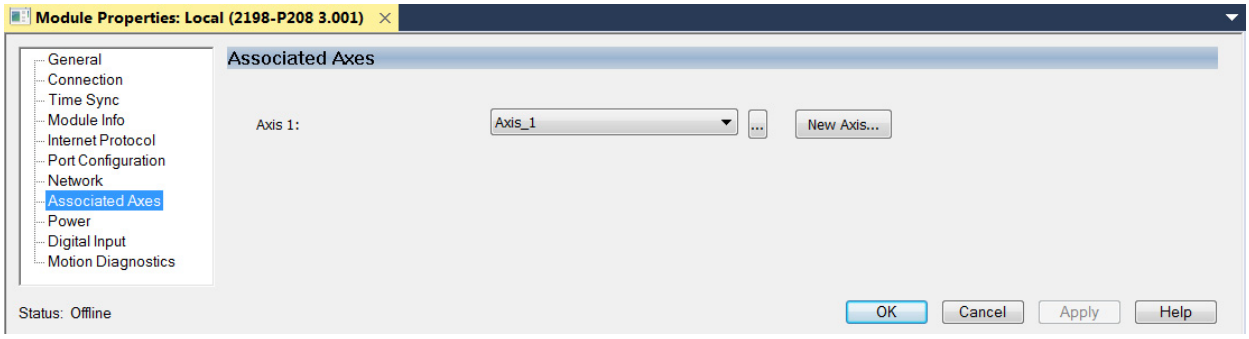

17. Click Apply.

18. Repeat step 1 through step 17 if you have more than one iTRAK power supply.

Configure the Inverter Drives

This procedure applies to single-axis and dual-axis inverters with hardwired or integrated safety connections. In this example, a 2198-D006-ERS4 dual-axis inverter is configured.

Follow these steps to configure Kinetix 5700 inverter drives.

1. Above the DC-bus power supply (converter) you just created, right-click Ethernet and choose New Module.

   The Select Module Type dialog box appears.

This example shows the 2198-S*xxx*-ERS*x* single-axis inverters you can choose from.

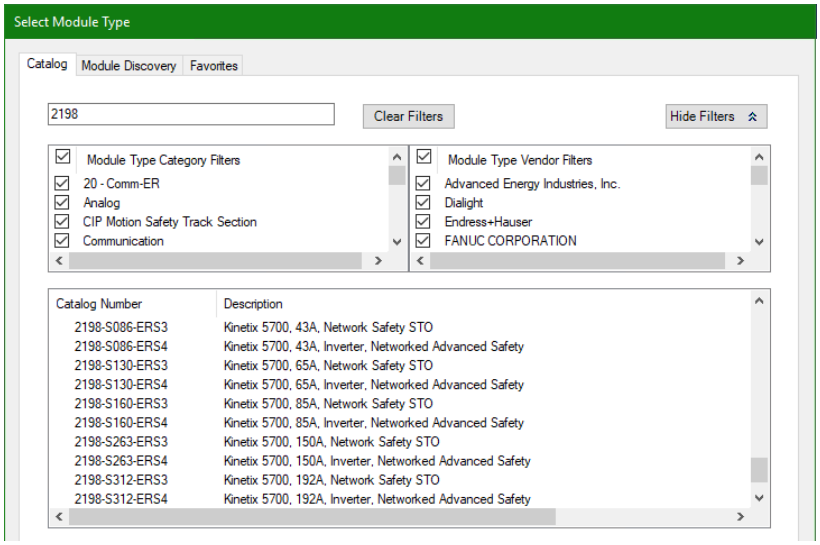

This example shows the 2198-D*xxx*-ERS*x* dual-axis inverters you can choose from.

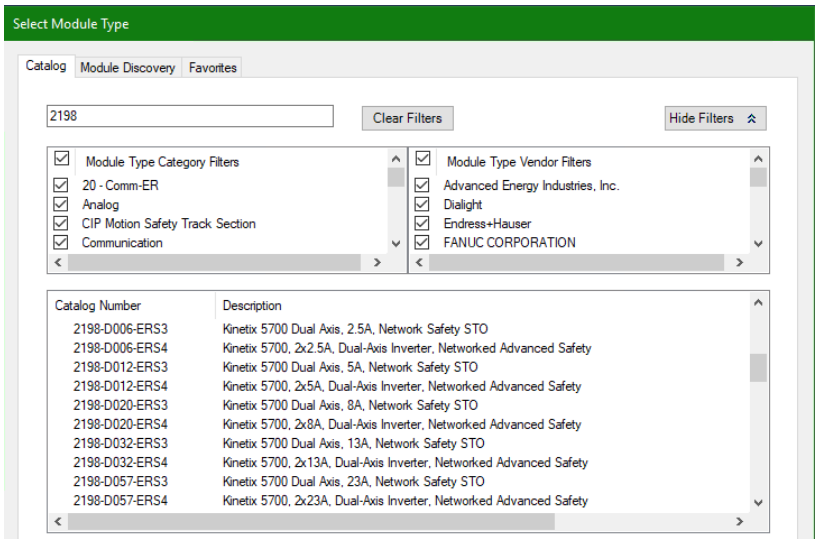

2. Enter 2198 to narrow your choices and select your 2198-*xxxx*-ERS3 or 2198-*xxxx*-ERS4 inverter as appropriate for your hardware configuration.
3. Click Create.

The New Module dialog box appears.

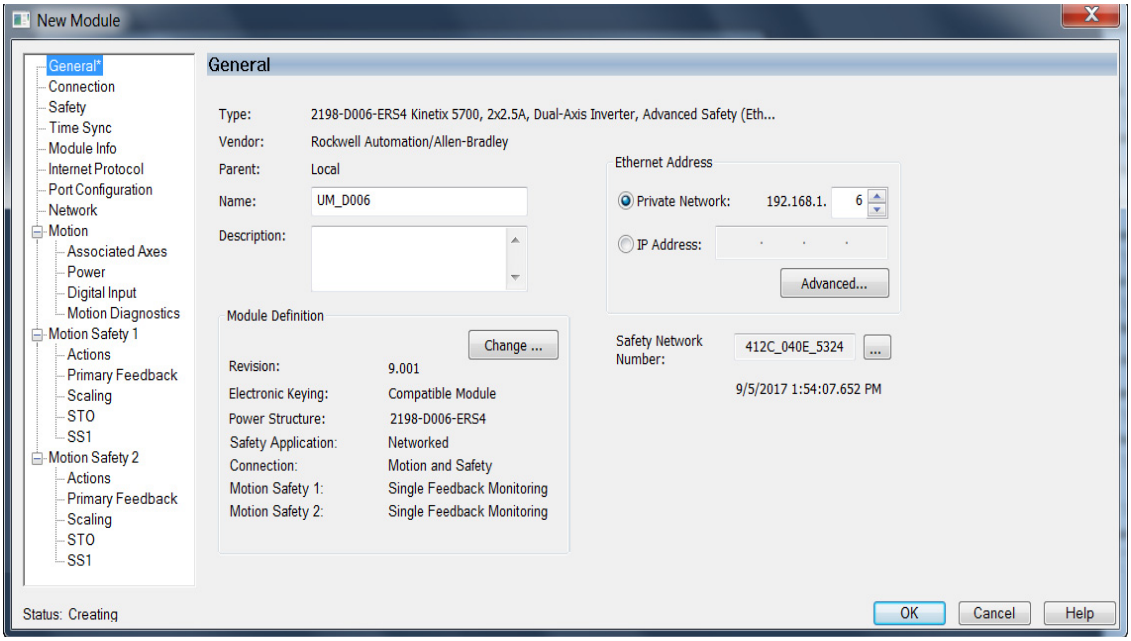

4. Configure the new drive.
   a. Type the drive Name.
   b. Select an Ethernet Address option.
      In this example, the Private Network address is selected.
   c. Enter the address of your 2198-*xxxx*-ERS*x* inverter.
      In this example, the last octet of the address is 6.
   d. Click Advanced if using network address translation with safety connection to add drive module configured IP address.

The fields to configure in the Module Definition dialog box are dependent on your drive, Logix Designer version, and drive firmware revision. Use the following table to navigate to the series of steps intended for your drive system.

Table 115 - How to Navigate Module Definition

For Drive Cat. No.	Logix Designer Version	Drive Firmware Revision	Go to:
2198-*xxxx*-ERS3 (series A)	30 or earlier	7 or earlier	Configure Module Definition for 2198-xxxx-ERS3 (series A) Drives on page 214
2198-*xxxx*-ERS3 (series B) 2198-*xxxx*-ERS4	31 or later	9 or later	Configure Module Definition for 2198-xxxx-ERS4 and 2198-xxxx-ERS3 (series B) Drives on page 215

Configure Module Definition for 2198-xxxx-ERS3 (series A) Drives

1. Under Module Definition click Change.

   The Module Definition dialog box appears.

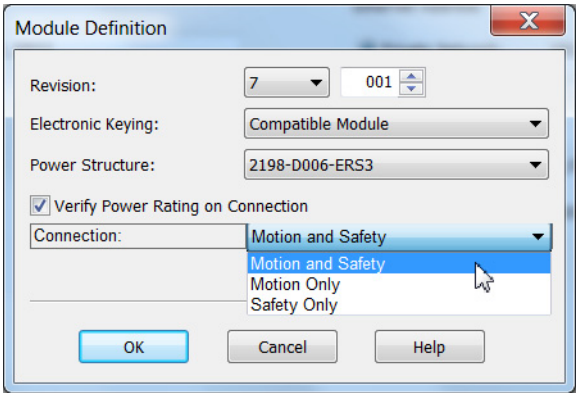

   Depending on the Module Definition revision selection, alternate product features and feedback types can be selected.

2. From the Connection pull-down menu, choose the Connection mode for your motion application.

   TIP When 'Safety' appears in the Connection mode, integrated safety is implied.

   IMPORTANT If the STO bypass jumper wires were applied during machine commissioning or maintenance, they must be removed before the drive will operate in Integrated (Networked) safety mode.

Table 116 - Module Connection Definitions

Connection Mode	Safety Options	Description
Motion and Safety	Integrated mode	Motion connections and integrated STO are managed by this controller.
Motion Only	• Hardwired STO mode • Integrated mode if there is a secondary safety controller	• Motion connections are managed by this controller. • Hardwired STO is controlled by the hardwired safety inputs or Integrated is managed by another controller that has a Safety-only connection to the drive.
Safety Only	Integrated mode	• Integrated STO is managed by this controller. • Motion connections are managed by another controller that has a Motion-only connection to the drive.

   The Safety Network Number (SNN) field populates automatically when the Connection mode includes an integrated Motion and Safety or Safety-only connection. For a detailed explanation of the safety network number, refer to the appropriate GuardLogix controller publication as defined in Additional Resources on page 13.

3. Click OK to close the Module Definition dialog box.
4. Click Apply.
5. Go to Configure the Power and Safety Categories on page 217.

Configure Module Definition for 2198-xxxx-ERS4 and 2198-xxxx-ERS3 (series B) Drives

1. Under Module Definition click Change.

   The Module Definition dialog box appears.

Module Definition for
2198-*xxxx*-ERS3 (series B) inverters
(no feedback configuration).

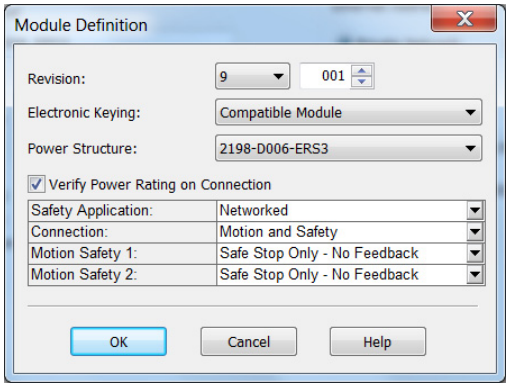

Module Definition for
2198-*xxxx*-ERS4 inverters
(includes feedback configuration).

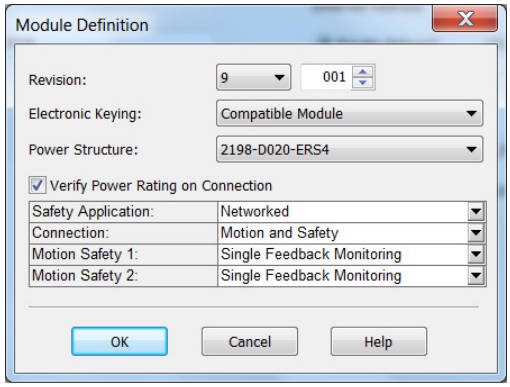

   Depending on the Module Definition revision selection, alternate product features and feedback types can be selected.

   - 2198-*xxxx*-ERS4 drives appear in only drive firmware revision 9.001 or later
   - With drive firmware revision 9.001 or later, 2198-*xxxx*-ERS3 (series B) drives support Timed SS1 function and STO function with configurable delay
   - 2198-*xxxx*-ERS3 drives do not support feedback monitoring

2. If you are replacing a 2198-*xxxx*-ERS3 (series A) drive with a 2198-*xxxx*-ERS3, series B drive, determine your Electronic Keying option from the pull-down menu (Compatible Module is the default setting). See Replacing 2198-xxxx-ERS3 (series A) Drives with Series B Drives on page 300 for more information.

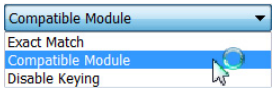

Drive Cat. No.	Studio 5000 Logix Designer	Electronic Keying
2198-*xxxx*-ERS3 (replacing series A with series B)	Version 30 or earlier	Compatible Module
	Version 31 or later	Exact Match (recommended) (1)

(1) See the Logix 5000 Controllers I/O and Tag Data Programming Manual, publication 1756-PM004, for more information on Electronic Keying settings.

3. From the Safety Application pull-down menu, choose between Hardwired for Hardwired STO mode or Networked for an integrated safety application (see Table 117 on page 216 for definitions).

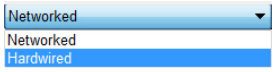

IMPORTANT If the STO bypass jumper wires were applied during machine commissioning or maintenance, they must be removed before the drive will operate in Integrated (Networked) safety mode.

Table 117 - Safety Application Definitions

Safety Application Mode (1)	Safety Functions	Minimum Drive Module (3) Required	Drive Module Connection Options	Minimum Controller Required (4)
Hardwired	Safe Torque-off (STO)	2198-*xxxx*-ERS3 (series A)	Motion Only	• ControlLogix 5570 • CompactLogix 5370
Networked (integrated)	Safe Torque-off (STO)	2198-*xxxx*-ERS3 (series A)	• Motion and Safety • Safety Only	GuardLogix 5570
	Timed SS1	2198-*xxxx*-ERS3 (series B)	• Motion and Safety • Safety Only	• GuardLogix 5580 • Compact GuardLogix 5380
	• Timed SS1 • Monitored SS1 • Controller-based safety functions (2)	2198-*xxxx*-ERS4	• Motion and Safety • Safety Only	

(1) For 2198-D*xxx*-ERS4 (dual-axis) inverters, you must configure axes 1 and 3 as either Networked or Hardwired, they cannot be mixed.
(2) See the Kinetix 5700 Safe Monitor Functions Safety Reference Manual, publication 2198-RM001, for more information on these Drive Safety instructions.
(3) Where a 2198-*xxxx*-ERS3 drive is specified, a 2198-*xxxx*-ERS4 drive is backwards compatible.
Where a 2198-*xxxx*-ERS3 (series A) drive is specified, a 2198-*xxxx*-ERS3 (series B) drive is backwards compatible.
(4) Where a ControlLogix or CompactLogix (non-safety) controller is specified, a GuardLogix or Compact GuardLogix controller is backwards compatible. Also, GuardLogix 5580 and Compact GuardLogix 5380 controllers are backwards compatible with GuardLogix 5570 and Compact GuardLogix 5370 controllers.

4. From the Connection pull-down menu, choose the Connection mode for your motion application (see Table 118 for definitions).

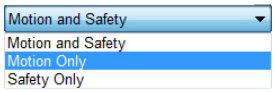

TIP When 'Safety' appears in the Connection mode, integrated safety is implied.

Table 118 - Module Connection Definitions

Connection Mode	Safety Options	Description
Motion and Safety	Integrated mode	Motion connections and integrated STO are managed by this controller.
Motion Only	• Hardwired STO mode • Integrated mode if there is a secondary safety controller	• Motion connections are managed by this controller. • Hardwired STO is controlled by the hardwired safety inputs or Integrated is managed by another controller that has a Safety-only connection to the drive.
Safety Only	Integrated mode	• Integrated STO is managed by this controller. • Motion connections are managed by another controller that has a Motion-only connection to the drive.

5. From the Motion Safety *x* pull-down menu, choose the integrated safety type (see Table 119 on page 217 for definitions).

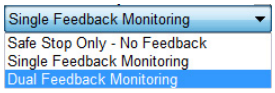

'Motion Safety' applies to 2198-S*xxx*-ERS4 (single-axis) inverters. 'Motion Safety 1' and 'Motion Safety 2' applies to 2198-D*xxx*-ERS4 (dual-axis) inverters.

Motion Safety and Motion Safety 1 align with Axis 1 configured in Associated Axes. Motion Safety 2 aligns with Axis 3 configured in Associated Axes.

Table 119 - Motion Safety Definitions

Motion Safety Mode	Safety Application Mode	Module Connection Options	Description
STO Only	Networked	• Motion and Safety • Safety Only	2198-*xxxx*-ERS3 (series A and B): STO function only.
Safe Stop Only - No Feedback			• 2198-*xxxx*-ERS4: STO function and Timed SS1 Safe Stop functions are available. • 2198-*xxxx*-ERS3 (series B): STO function and Timed SS1 Safe Stop functions are available.
Single Feedback Monitoring			Primary feedback is used in the safety object for safe monitoring. The feedback can be a SIL rated Hiperface DSL encoder, for example, a VPL-B1003P-Q or W motor used in the DSL Feedback port. This can also be a Sine/Cosine or EnDat device, for example, an MPL-B310P-M motor used in the Universal Feedback port. See the Kinetix 5700 Safe Monitor Functions Safety Reference Manual, publication 2198-RM001, to evaluate SIL levels possible with a single feedback device.
Dual Feedback Monitoring			In addition to primary feedback, an external feedback device is used to improve SIL levels. For example, the Bulletin 842HR type encoder can be used in the Universal Feedback port as a Sine/Cosine device. See the Kinetix 5700 Safe Monitor Functions Safety Reference Manual, publication 2198-RM001, to evaluate SIL levels possible with two feedback devices.

The Safety Network Number (SNN) field populates automatically when the Connection mode includes an integrated Motion and Safety or Safety-only connection. For a detailed explanation of the safety network number, refer to the appropriate GuardLogix controller publication as defined in Additional Resources on page 13.

6. Click OK to close the Module Definition dialog box.
7. Click Apply.

Configure the Power and Safety Categories

1. Click the Power category.

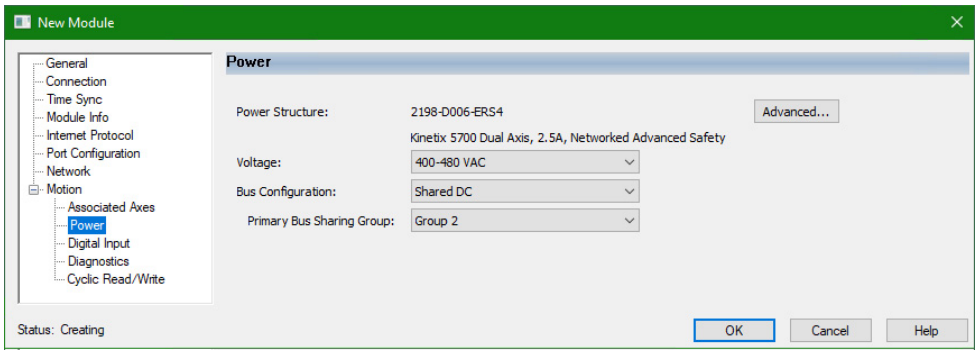

IMPORTANT The Logix Designer application enforces shared-bus configuration rules for Kinetix 5700 drives.

2. From the pull-down menus, choose the power options appropriate for your hardware configuration.

Attribute	Menu	Description
Bus Configuration	Shared DC (2)	Applies to 2198-S*xxx*-ERS*x* and 2198-D*xxx*-ERS*x* inverter drives.
	Shared DC - Non-CIP Motion™ Converter (3)	Applies to the designated inverter in drive systems powered by the 8720MC-RPS regenerative power supply.
Bus Sharing Group (1) (3)	• Group1 • Group2 • Group3…	Applies to any bus-sharing configuration.

(1) For more information on bus-sharing groups, refer to Understand Bus-sharing Group Configuration on page 265.
(2) Shared DC bus configuration is the default selection for single-axis and dual-axis inverters.
(3) Because the 8720MC-RPS unit is not an EtherNet/IP network device the Logix 5000 controller does not communicate with it. The designated inverter, configured as the Shared DC - Non-CIP Motion Converter, monitors the 8720MC-RPS unit status through a digital input (Regen OK) and communicates with the other inverters to signal when the DC-bus voltage is present.

ATTENTION: To avoid damage to equipment all modules physically connected to the same shared-bus connection system must be part of the same Bus Sharing Group in the Logix Designer application.

3. Click OK to close the Module Properties dialog box.
4. Click Close to close the Select Module Type dialog box.

Your 2198-*xxxx*-ERS4 inverter appears in the Controller Organizer under the Ethernet network in the I/O Configuration folder.

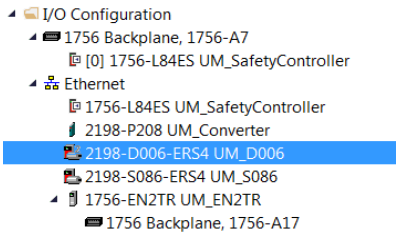

5. Right-click the drive you just created in the Controller Organizer and choose Properties.

The Module Properties dialog box appears.

TIP To configure the remaining inverter properties, you must close the New Module dialog box and reopen it as the Module Properties dialog box.

If	Then
Your application includes integrated safety	Go to step 6 on page 219.
Your application includes hardwired safety or has no safety connections	Go to Continue Inverter Configuration on page 220.

6. Click the Safety category.

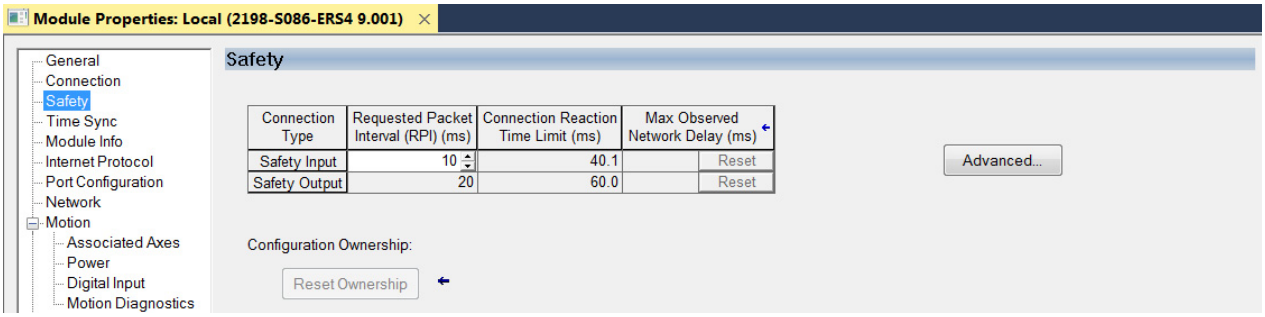

7. The connection between the owner and the 2198-*xxxx*-ERS*x* inverter is based on the following:
   - Servo drive safety network number
   - GuardLogix slot number
   - GuardLogix safety network number
   - Path from the GuardLogix controller to the 2198-*xxxx*-ERS*x* drive
   - Configuration signature

   If any differences are detected, the connection between the GuardLogix controller and the 2198-*xxxx*-ERS*x* inverter is lost, and the yellow yield icon appears in the controller project tree after you download the program.

8. Click Advanced.

   The Advanced Connection Reaction Time Limit Configuration dialog box appears.

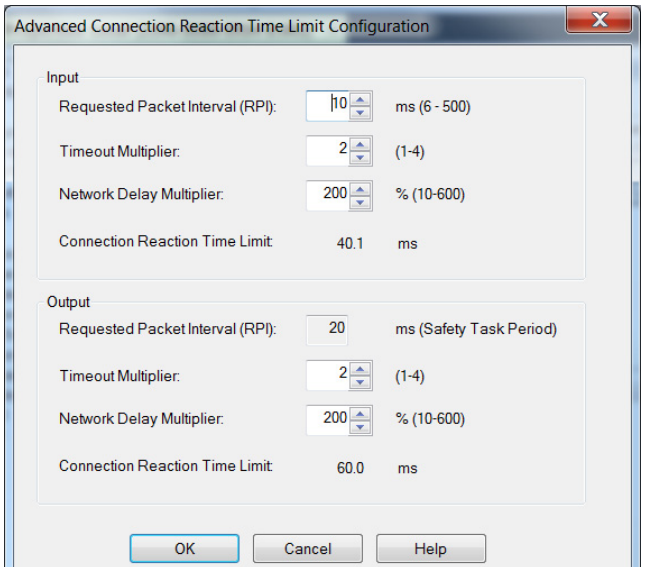

Analyze each safety channel to determine the appropriate settings. The smallest Input RPI allowed is 6 ms. Selecting small RPI values consumes network bandwidth and can cause nuisance trips because other devices cannot get access to the network.

For more information about the Advanced Connection Reaction Time Limit Configuration, refer to Additional Resources on page 13 for the appropriate user manual for your GuardLogix or Compact GuardLogix controller.

9. Click OK to close the Advanced dialog box.
10. Click Apply to save the Safety category parameters.

Continue Inverter Configuration

After you've established your Kinetix 5700 inverters in the Logix Designer application, the feedback options need to be defined for each axis. Each physical axis supports motor and auxiliary feedback.

Table 120 - Kinetix 5700 Feedback Axis Summary

Kinetix 5700 Inverter	Inverter Cat. No.	Motor Feedback	Auxiliary Feedback
Single-axis Inverters	2198-S*xxx*-ERS3 or 2198-S*xxx*-ERS4	1 (axis 1)	1 (axis 2)
Dual-axis Inverters	2198-D*xxx*-ERS3 or 2198-D*xxx*-ERS4	2 (axis 1 and 3)	2 (axis 2 and 4)

Follow these steps to configure the axes for your Kinetix 5700 drive system.

1. Right-click the 2198-*xxxx*-ERS4 inverter you just created and choose Properties.

   The Module Properties dialog box appears.
2. Select the Associated Axes category.

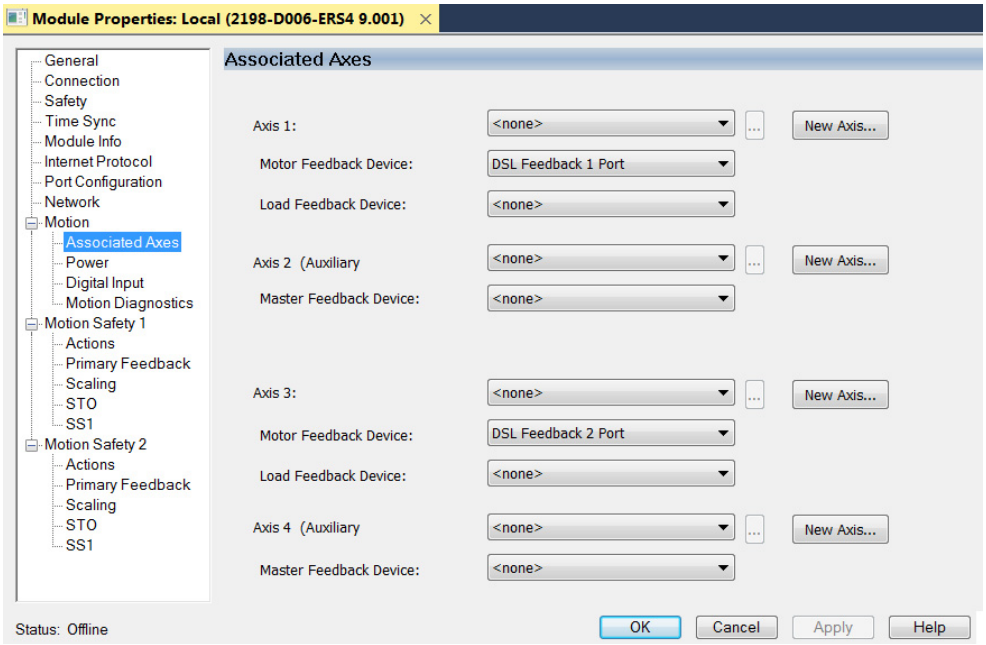

In this 2198-D006-ERS4 (dual-axis inverter) example, four axes are possible. Single-axis inverters support only two axes.

- Axis 1 and Axis 2 apply to Motor (DSL) Feedback Connector A (Port 1) and Universal Feedback Connector A (Port 1).
- Axis 3 and Axis 4 apply to Motor (DSL) Feedback Connector B (Port 2) and Universal Feedback Connector B (Port 2).

Figure 120 - Dual-axis Inverter Feedback

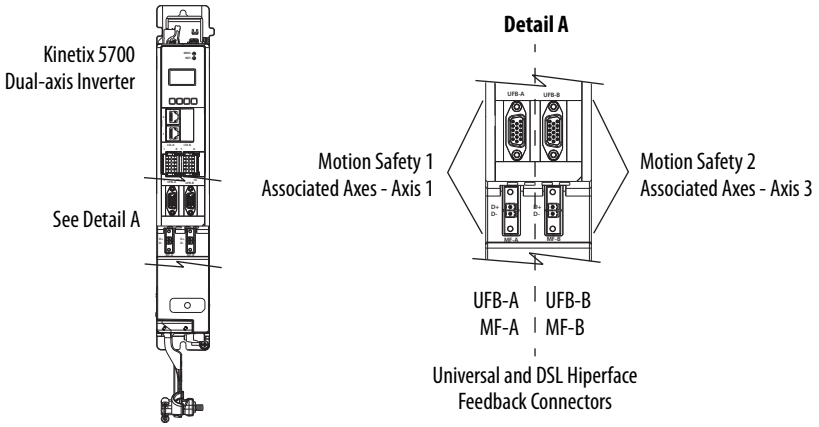

The Feedback Devices are configured for either the DSL Feedback Port or the Universal Feedback Port.

Motor Feedback Options	Description
DSL Feedback Port	Applies to motors and actuators compatible with the 2198-KITCON-DSL connector kit and 2198-H2DCK converter kit (series B or later). These kits plug into the 2-pin motor feedback (MF) connector.
Universal Feedback Port	Applies to motors and actuators compatible with the 2198-K57CK-D15M universal connector kit. These kits plug into the 15-pin universal feedback (UFB) connector.

3. From the Axis *x* pull-down menu, choose an axis to assign to that motor feedback or auxiliary feedback device.
4. From the Feedback Device pull-down menu, choose either DSL Feedback *x* Port or Universal Feedback *x* Port to associate with each axis.
5. Click New Axis.

The New Tag dialog box appears.

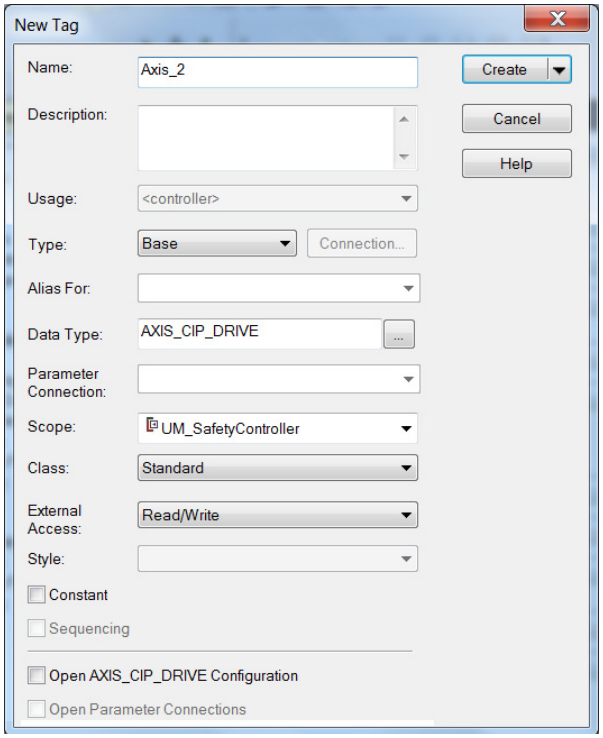

6. Type the axis Name.

   AXIS_CIP_DRIVE is the default Data Type.

7. Click Create.

   The axis (Axis_1 in this example) appears in the Controller Organizer under Motion Groups> Ungrouped Axes and is assigned as Axis 1.

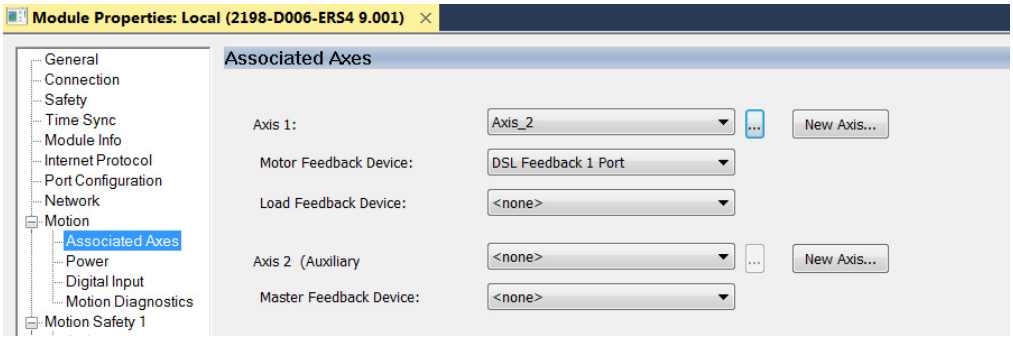

TIP You can configure an axis as Feedback Only. Refer to Configure Feedback-only Axis Properties on page 231 for more information.

Refer to Configure Module Properties on page 258 for configuring motor feedback, load feedback, and master feedback devices.

8. Click Apply.

9. Click the Digital Input category.

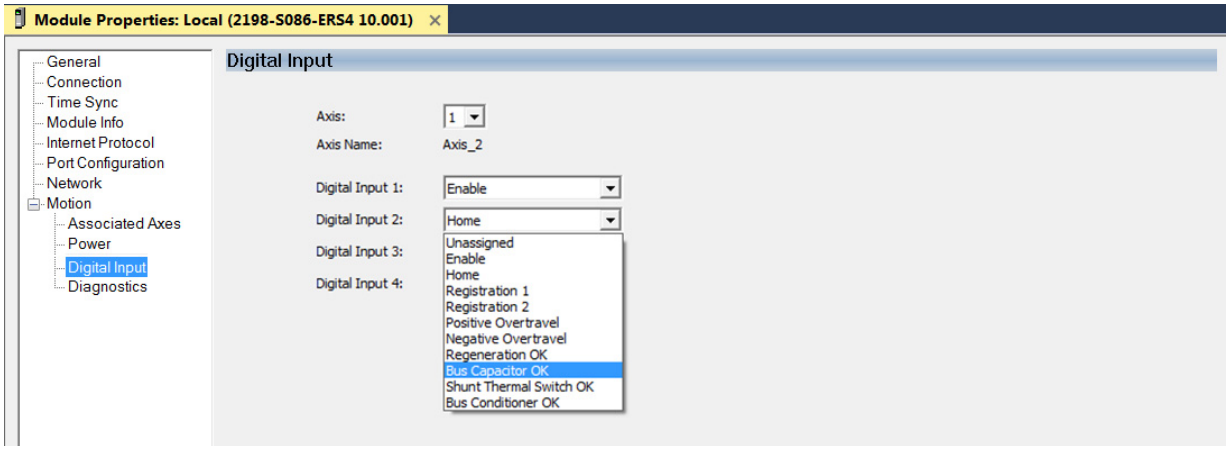

10. From the Digital Input pull-down menus choose the functions appropriate for your application.

    In this example, Digital Input 2 is assigned Bus Capacitor OK to monitor your 2198-CAPMOD-2240 capacitor module.

    For 8720MC-RPS power supplies:

    - When a 2198-S*xxx*-ERS*x* single-axis inverter is the first drive module (adjacent to the 2198-CAPMOD-2240 capacitor module) you must configure the Digital Input category as Regeneration OK and wire the IOD connector.
    - When a 2198-D*xxx*-ERS*x* dual-axis inverter is the first drive module (adjacent to the 2198-CAPMOD-2240 capacitor module) and Axis 1 and 3 are used, you must configure the Digital Input category as Regeneration OK and wire the IOD connector for each axis.

11. Click OK.

12. Repeat step 1 through step 11 for each 2198-*xxxx*-ERS*x* servo drive.

Configure the Motion Group

Follow these steps to configure the motion group.

1. In the Controller Organizer, right-click Motion Groups and choose New Motion Group.

   The New Tag dialog box appears.

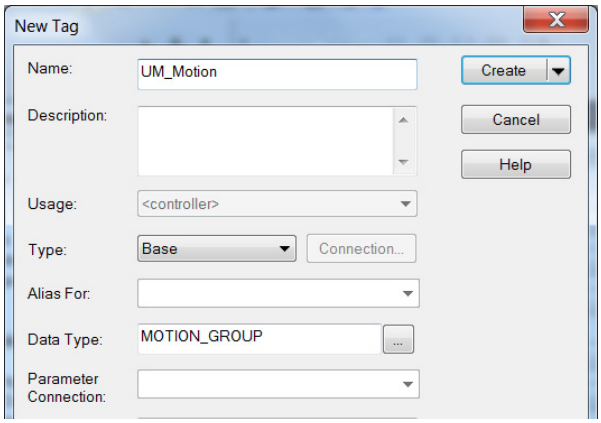

2. Type the new motion group Name.
3. Click Create.

   Your new motion group appears in the Controller Organizer under the Motion Groups folder.

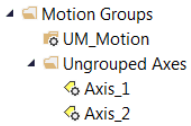

4. Right-click the new motion group and choose Properties.

   The Motion Group Properties dialog box appears.

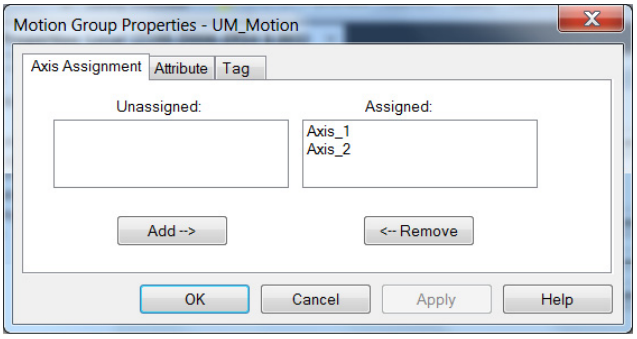

5. Click the Axis Assignment tab and move your axes (created earlier) from Unassigned to Assigned.
6. Click the Attribute tab and edit the default values as appropriate for your application.
7. Click OK.

   Your axes moves to the new motion group.

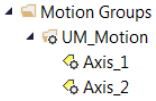

Configure Regenerative Bus Supply Axis Properties

Follow these steps to configure Axis Properties for your 2198-RP*xxx* regenerative bus supply.

1. In the Controller Organizer, right-click the regenerative-bus supply axis and choose Properties.
2. Select the General category.

   The General dialog box appears.

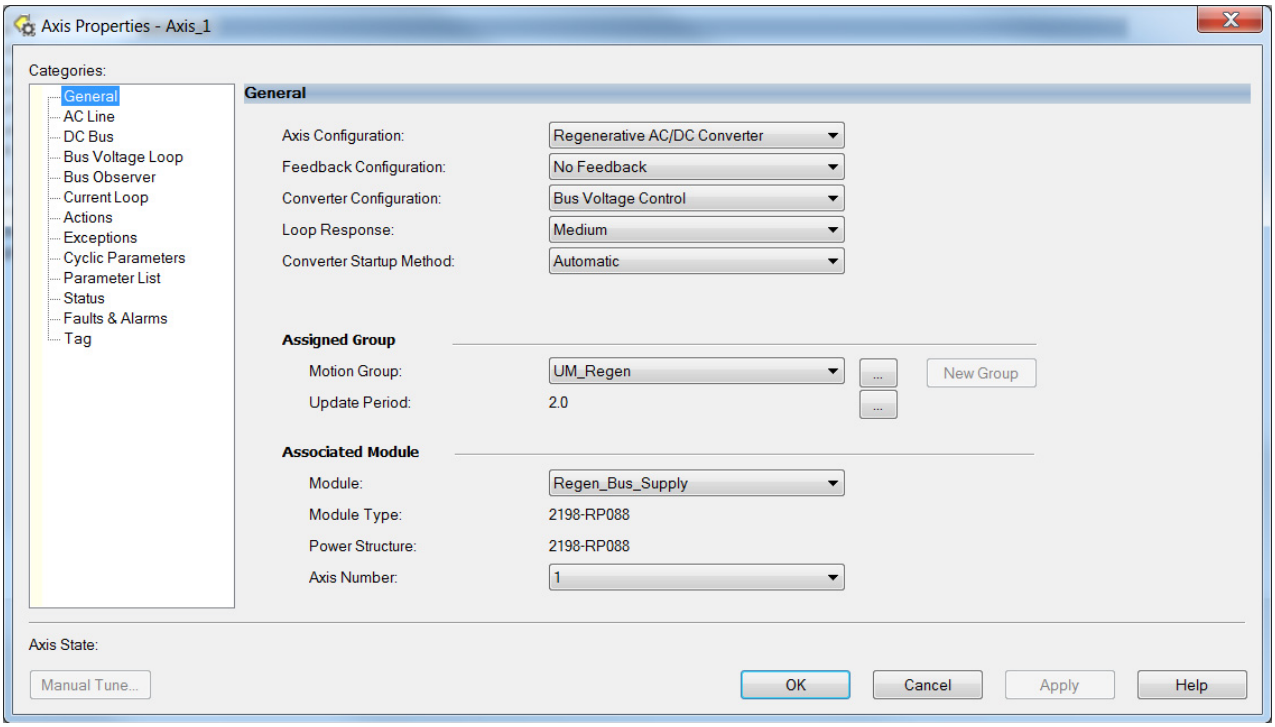

3. From the Loop Response pull-down menu choose Medium (default).

   Loop Response is for BusVoltageSetPoint dynamic changes during operation, not voltage regulation stiffness or stability. The default setting is appropriate for most applications.

   Table 121 - Loop Response Settings

Setting	Impact
High	Under-damped voltage set-point step response (Z = 0.8)
Medium	Critically-damped voltage set-point step response (Z = 1.0)
Low	Over-damped voltage set-point step response (Z = 1.5)

4. From the Converter Startup Method pull-down menu choose:
   - Automatic (default) for active DC-bus voltage regulation
   - Enable Request for passive AC rectification like the 2198-P*xxx* DC-bus (converter) power supply

   For more information on the Converter Startup Method, see DC-bus Voltage Regulation on page 40.
5. Click Apply.

6. Click the AC Line category.

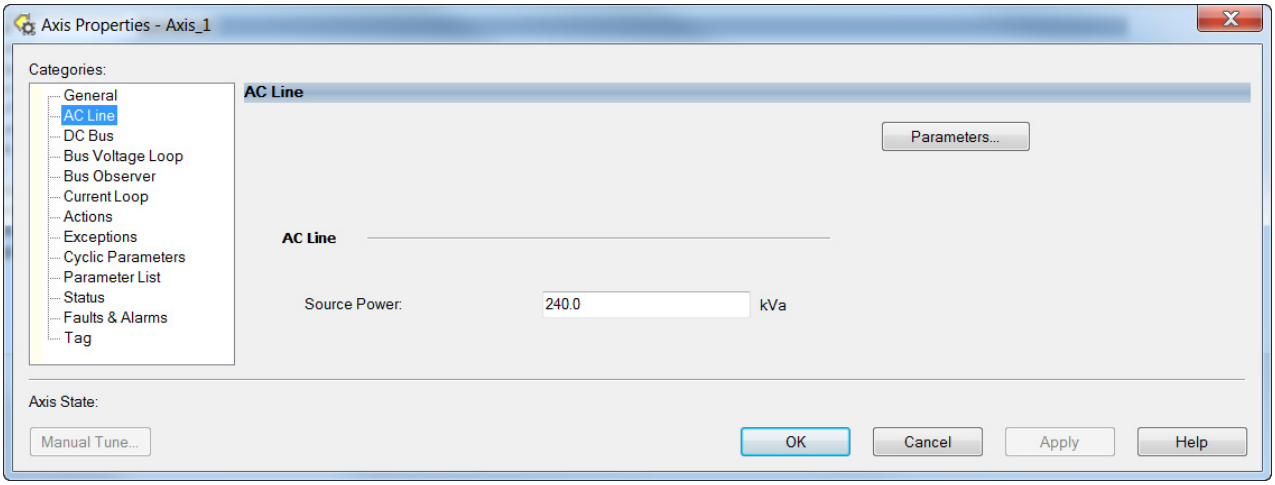

Source Power is the kVA rating of the transformer feeding the regenerative power supply. The default Source Power setting is 10 times the power rating of the regenerative power supply.

When the transformer rating is less than the regenerative power supply rating, enter the kVA rating of the transformer.

The Source Power attribute applies detuning and current limiting only when Source Power is set lower than the rating of the regenerative power supply (1/10 of default).

7. Click the DC Bus category.

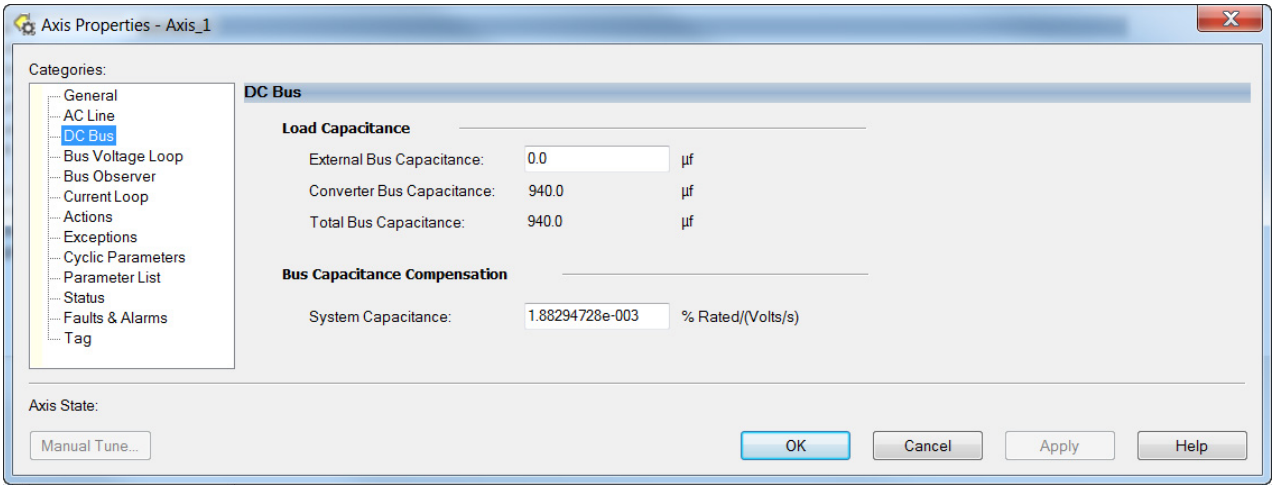

External bus capacitance is the sum of all drive and accessory module capacitance.

IMPORTANT An accurate bus capacitance value is required for proper operation.

8. Manually calculate the sum of the drive and accessory module capacitance values and enter the External Bus Capacitance value.

See Calculate System and External-bus Capacitance on page 398 to calculate external bus capacitance.

9. Click the Bus Voltage Loop category.

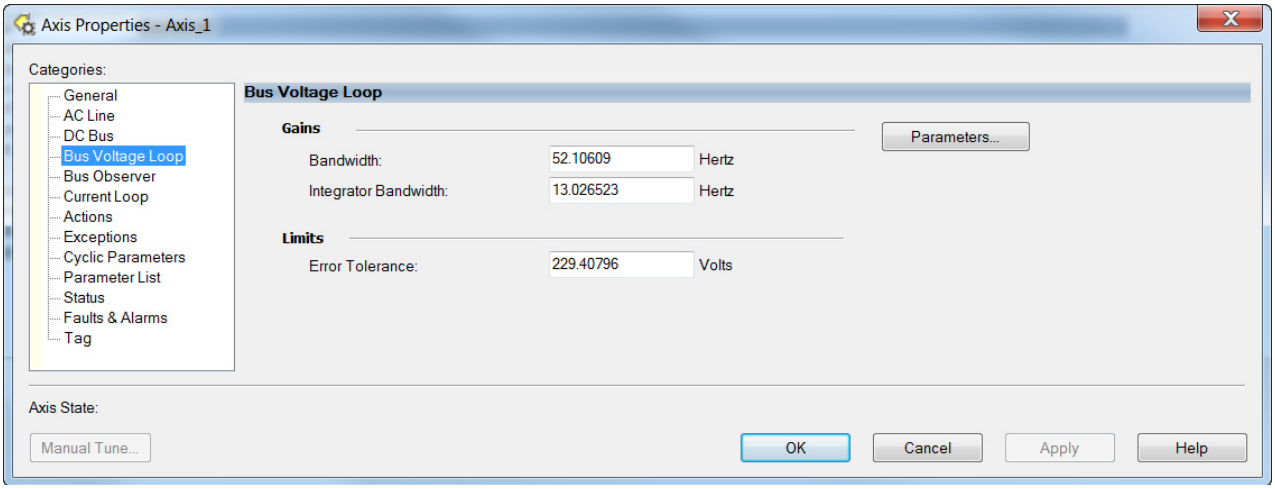

We do not recommend changing the default bandwidth values.

The default Gains are set to support peak load current. See Detuned Gain Setting Examples table on page 229 for an example of a detuned gain set. Detuned gains increase system stability and can improve THD, but voltage regulation will be less stiff.

IMPORTANT Reduced voltage regulation stiffness can result in overvoltage or undervoltage faults during peak load.

10. Click Parameters.

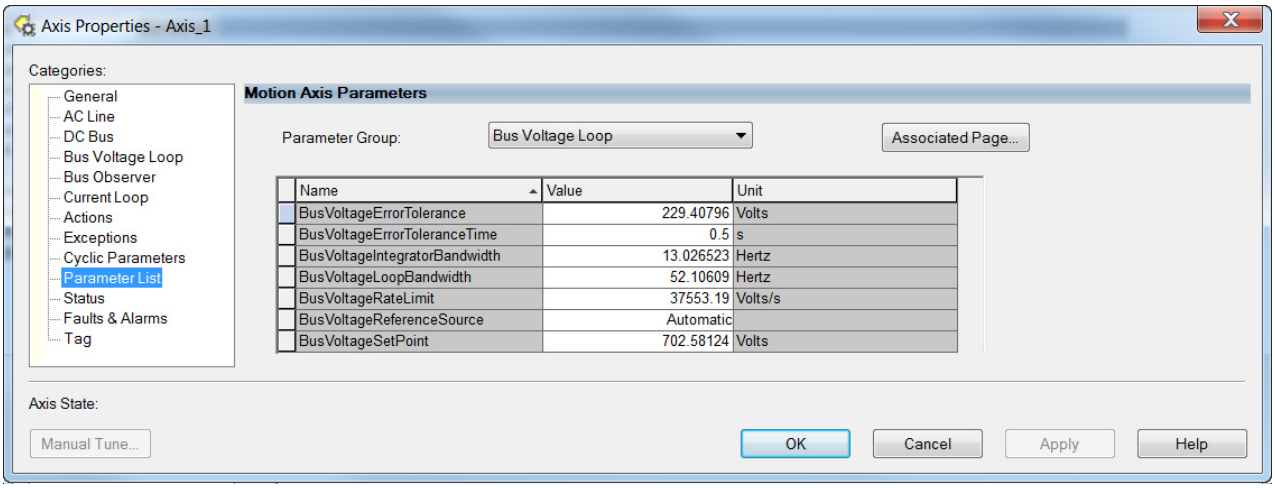

With the default BusVoltageRateLimit, if the BusVoltageSetPoint value changes (while running) the power supply will draw peak current to change the bus voltage as fast as possible. You can reduce the rate limit to limit the current during changes to the BusVoltageSetPoint attribute without any effect to stability or load response.

11. From the BusVoltageReferenceSource pull-down menu, choose:
    - In the Automatic (default) setting, the converter optimizes the Bus Voltage Reference for the best converter performance
    - In the Manual setting, you configure the desired Bus Voltage Set Point value for the Bus Voltage Reference signal

    For more information on these Bus Voltage parameter settings, see DC-bus Voltage Regulation on page 40.
12. Enter a value for the BusVoltageSetPoint.

    We recommend a maximum value of 715V DC. Over 715V DC can result in higher motor-insulation stress, higher THD, and higher likelihood of over temperature fault in the regenerative bus supply.
13. Click Apply.
14. Click the Bus Observer category.

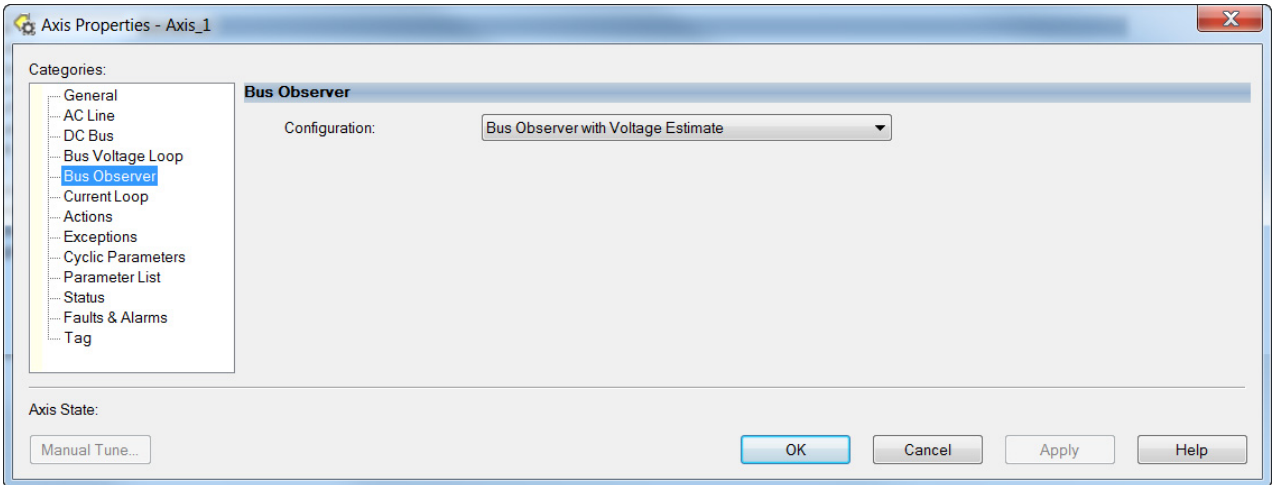

The Bus Observer setting is used for bus stiffness. If Bus Observer is disabled, you significantly increase the likelihood of getting an overvoltage fault during regeneration.

We do not recommend changing the default Bus Observer setting.

Table 122 - Bus Observer Configurations

Configuration	Observer Operation	Impact
Disabled	• Load Estimate Decoupling Disabled • Voltage Feedback Filtering Disabled	• Increased DC-bus voltage ripple • Reduced current THD • Reduced voltage regulation stiffness
Voltage Estimate Only	• Load Estimate Decoupling Disabled • Voltage Feedback Filtering Enabled	
Bus Observer Only	• Load Estimate Decoupling Enabled • Voltage Feedback Filtering Disabled	• Decreased DC-bus voltage ripple • Increased current THD • Increased voltage regulation stiffness
Bus Observer with Voltage Estimate (Default)	• Load Estimate Decoupling Enabled • Voltage Feedback Filtering Enabled	

15. Click the Current Reference category.

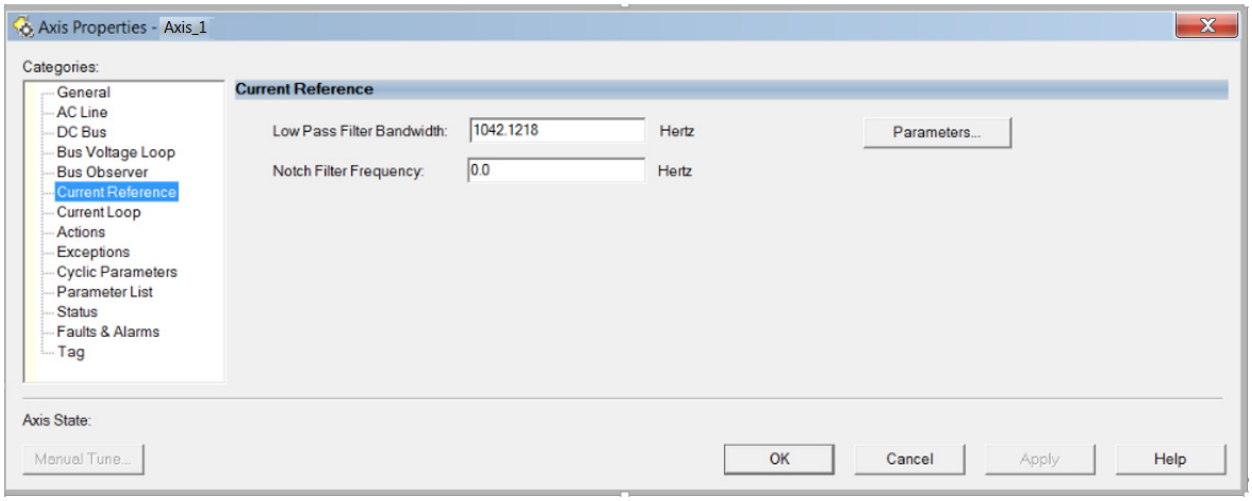

Low Pass Filter Bandwidth adjusts the filtering of the reference to the current regulator. To minimize the effect on bus voltage regulator stability, this value should be no lower than five times the Bus Voltage Loop bandwidth.

Notch Filter Frequency can be used to address DC-bus resonances in the case of some long cable distributed DC-bus systems. Notch Filter Frequency cannot be used to address line side resonances. A value of 0.0 Hz disables the notch filter.

16. Click the Current Loop category.

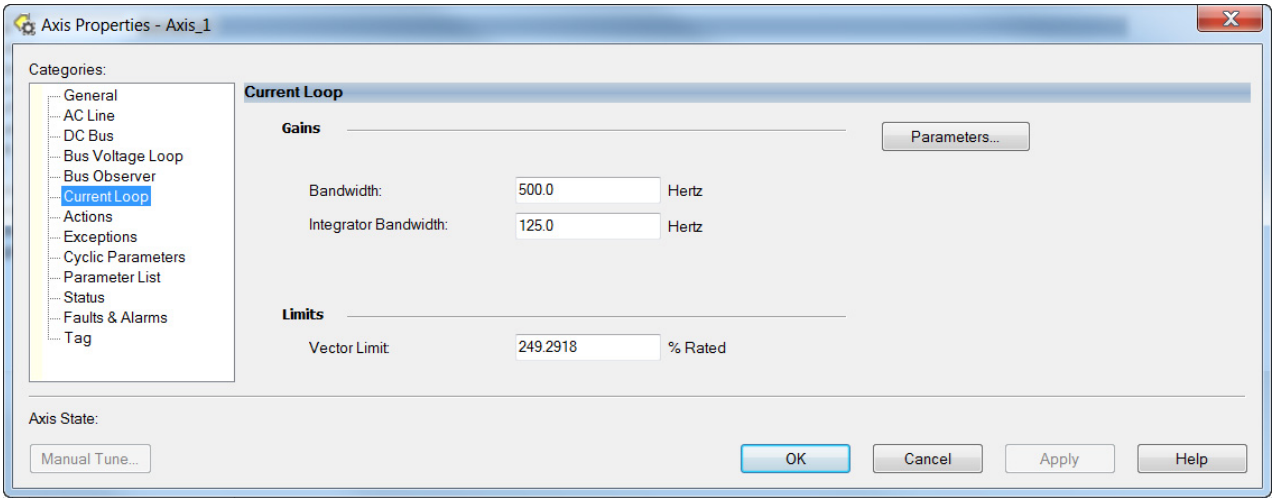

We do not recommend changing the default bandwidth values.

Table 123 - Detuned Gain Setting Examples

Gain Setting With Reduced Performance	Value
Bus Voltage Loop Bandwidth	16
Bus Voltage Loop Integrator Bandwidth	4
Current Loop Bandwidth	160
Current Loop Integrator Bandwidth	40

Detuning to a desired level, while maintaining stability, can be achieved by setting a current loop bandwidth and maintaining proportional spacing of 10x between the voltage and current loop, and 4x spacing from the loop bandwidth to integral loop bandwidth.

17. Click OK.

Configure Vertical Load Control Axis Properties

The 2198-*xxxx*-ERS4 servo drives (firmware 9.001 or later) support the Vertical Load Control feature. A vertical load is an axis that can move due to stored potential energy. Some examples include a robot arm, lift, or compressed spring. When set to Enabled, rather than applying Stop Category 0 stopping actions in response to most Major fault conditions, the drive brings the motor to a controlled stop and engages the holding brake prior to disabling the power structure.

When Vertical Load Control is enabled and the drive supports Torque Proving and Brake Proving functionality, the controller sets the associated Proving Configuration attribute default value to enable.

IMPORTANT Brake proving functionality is applicable only to drive control modes that are capable of generating holding torque based on a feedback device. Therefore, Brake Proving is not applicable to Frequency Control mode with Sensorless Vector control method.

For more information on controlling vertical loads, see the Vertical Load and Holding Brake Management Application Technique, publication MOTION-AT003.

Figure 121 - Configure Vertical Load Control

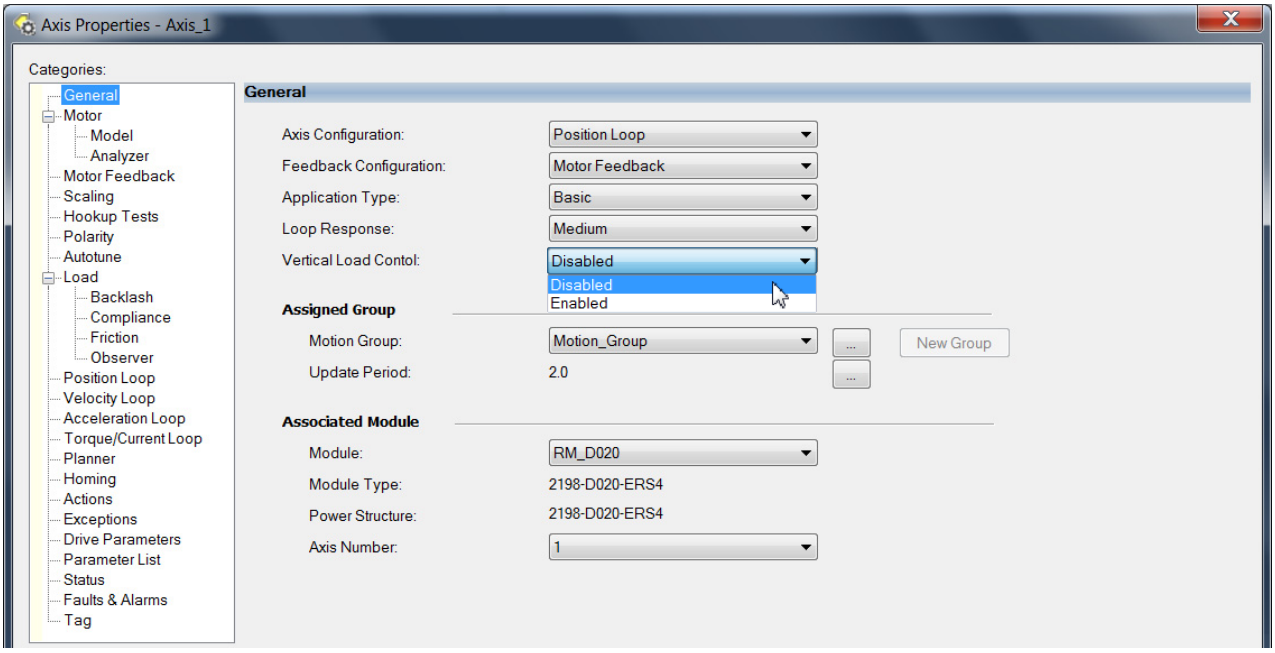

Configure Feedback-only Axis Properties

Follow these steps to configure stopping-action axis properties.

1. In the Controller Organizer, right-click an axis and choose Properties.
2. Select the General category.

   The General dialog box appears.

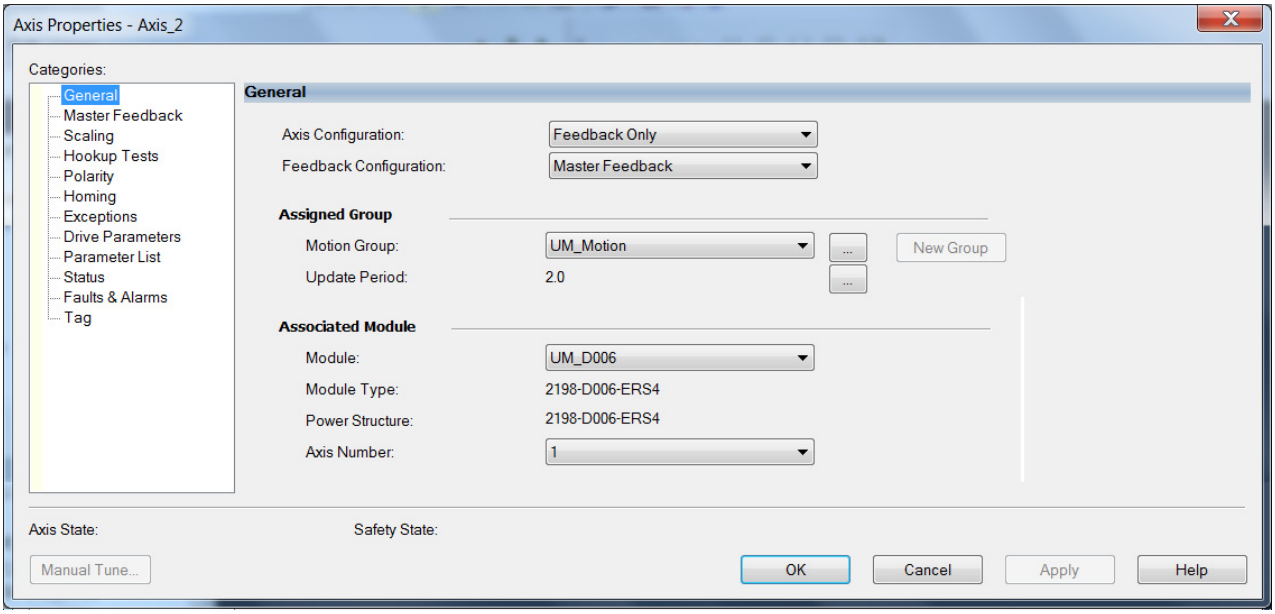

3. From the Axis Configuration pull-down menu, choose Feedback Only.
4. From the Feedback Configuration pull-down menu, choose Master Feedback.
5. From the Module pull-down menu, choose the drive to associate with your Feedback Only axis.

   The Module Type and Power Structure fields populate with the chosen drive catalog number.
6. Click Apply.
7. Configure module properties for your Kinetix 5700 servo drive for Master Feedback.

   See Configure Module Properties on page 258 for configuration examples.
8. Select the Master Feedback Category.

The Master Feedback Device Specification appears.

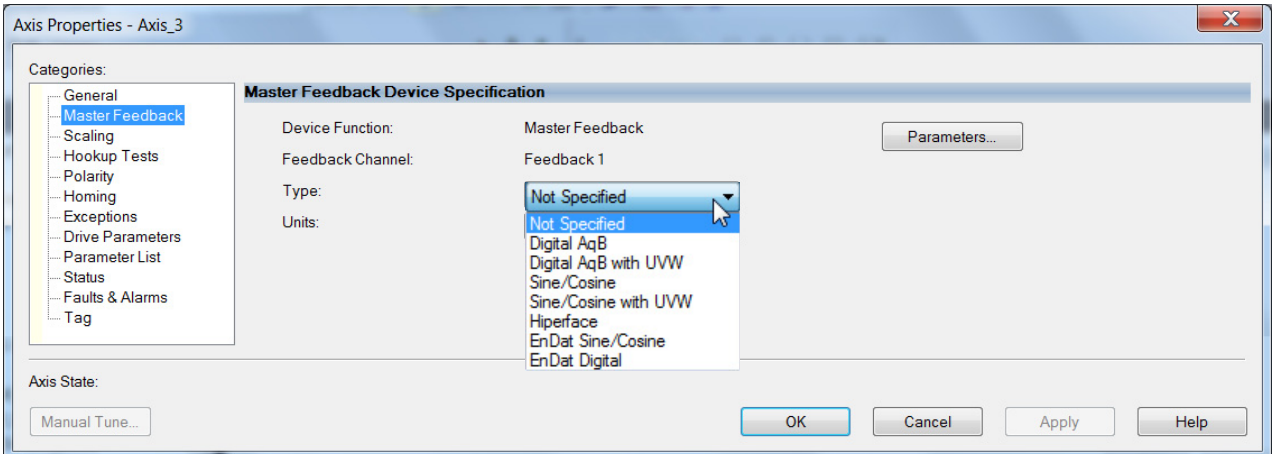

9. From the Type pull-down menu, choose a feedback device type.

   See Configure Axis Properties beginning on page 260 for configuration examples.

10. Review other categories in the Controller Organizer and make changes as needed for your application.

11. Click OK.

See Auxiliary Feedback Specifications on page 115 for more information on auxiliary feedback signals and Allen-Bradley auxiliary feedback encoders available for use.

Configure Induction-motor Frequency-control Axis Properties

Follow these steps to configure induction-motor axis properties for various frequency control methods.

General and Motor Categories

1. In the Controller Organizer, right-click an axis and choose Properties.
2. Select the General category.

   The General dialog box appears.

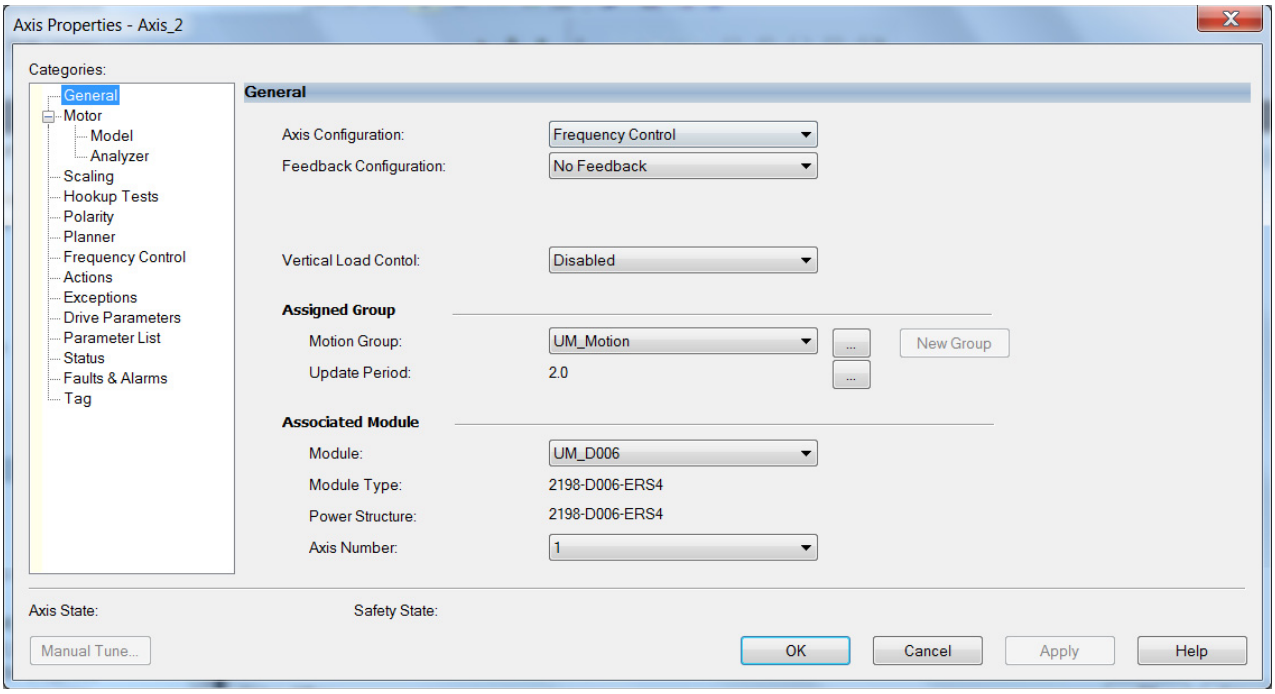

3. From the Axis Configuration pull-down menu, choose Frequency Control.
4. From the Feedback Configuration pull-down menu, choose No Feedback.
5. From the Module pull-down menu, choose the drive to associate with your Frequency Control (induction motor) axis.

   The Module Type and Power Structure fields populate with the chosen drive catalog number.
6. Click Apply.

7. Select the Motor category.

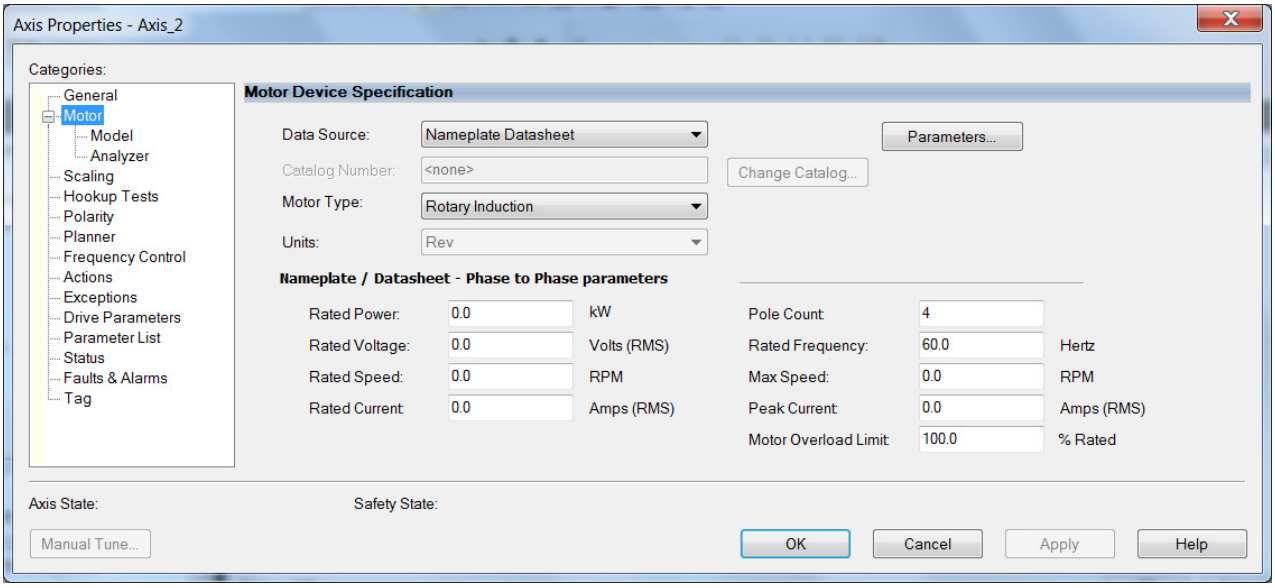

8. From the Data Source pull-down menu, choose Nameplate Datasheet.

   This is the default setting.

9. From the Motor Type pull-down menu, choose Rotary Induction.

10. From the motor nameplate or datasheet, enter the phase-to-phase values for your motor.

    See Motor Category on page 434 for a motor performance datasheet example. Also, see Motor Nameplate Datasheet Entry for Custom Motor Applications, publication 2198-AT002.

11. Click Apply.

Basic Volts/Hertz Method

1. Configure the General category and Motor category as shown in General and Motor Categories on page 233.
2. Select the Frequency Control category.
3. From the Frequency Control Method pull-down menu, select Basic Volts/Hertz.

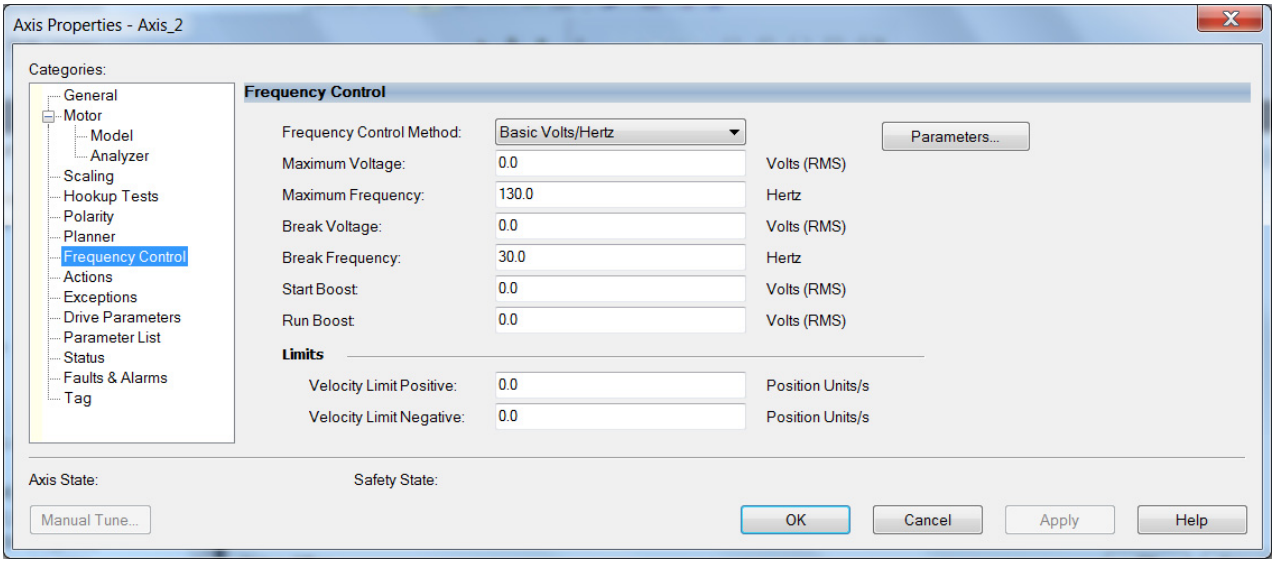

4. Enter the Basic Volts/Hertz attribute values appropriate for your application.

   Default values are shown.
5. Click Apply.
6. Select the Parameter List category.

The Motion Axis Parameters dialog box appears.

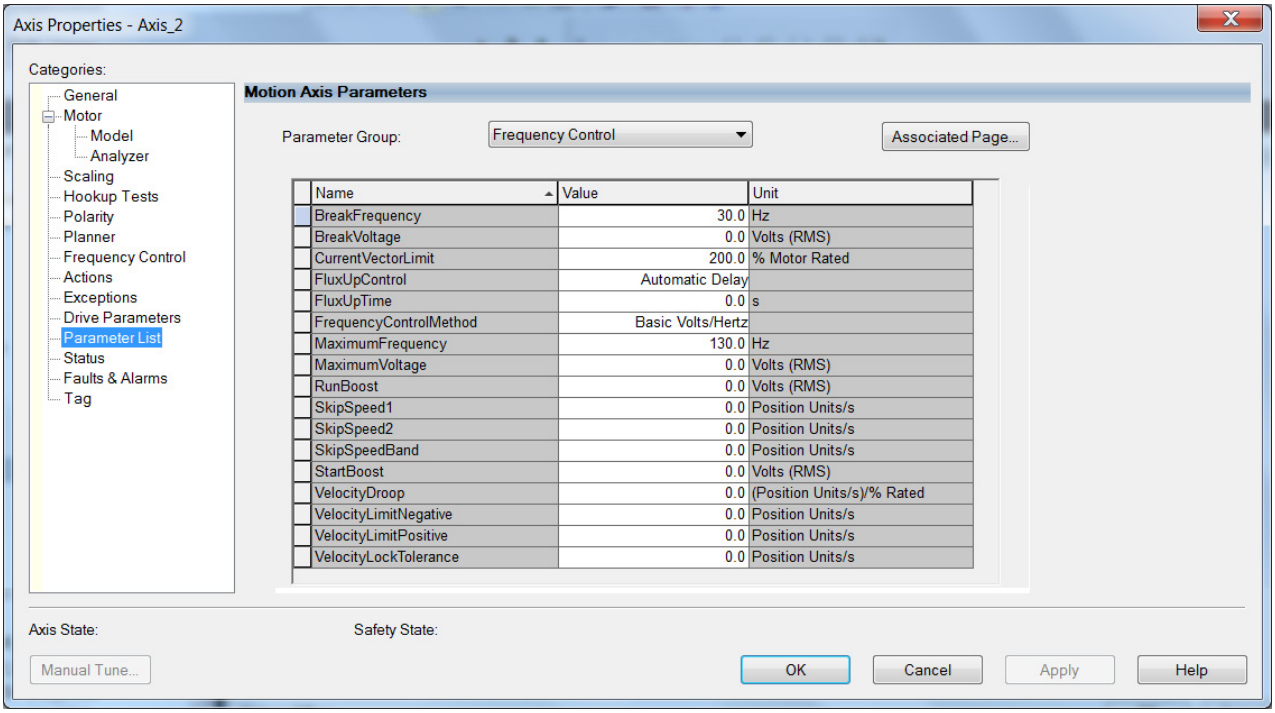

7. From the Parameter Group pull-down menu, choose Frequency Control.
8. Set the FluxUp, SkipSpeed, VelocityDroop, and CurrentVectorLimit attributes appropriate for your application.

   See the corresponding section in Appendix F, beginning on page 419, for information and configuration examples regarding all of these topics.
9. Click OK.

Sensorless Vector Method

1. Configure the General category and Motor category as shown in General and Motor Categories on page 233.
2. Select the Frequency Control category.
3. From the Frequency Control Method pull-down menu, choose Sensorless Vector.

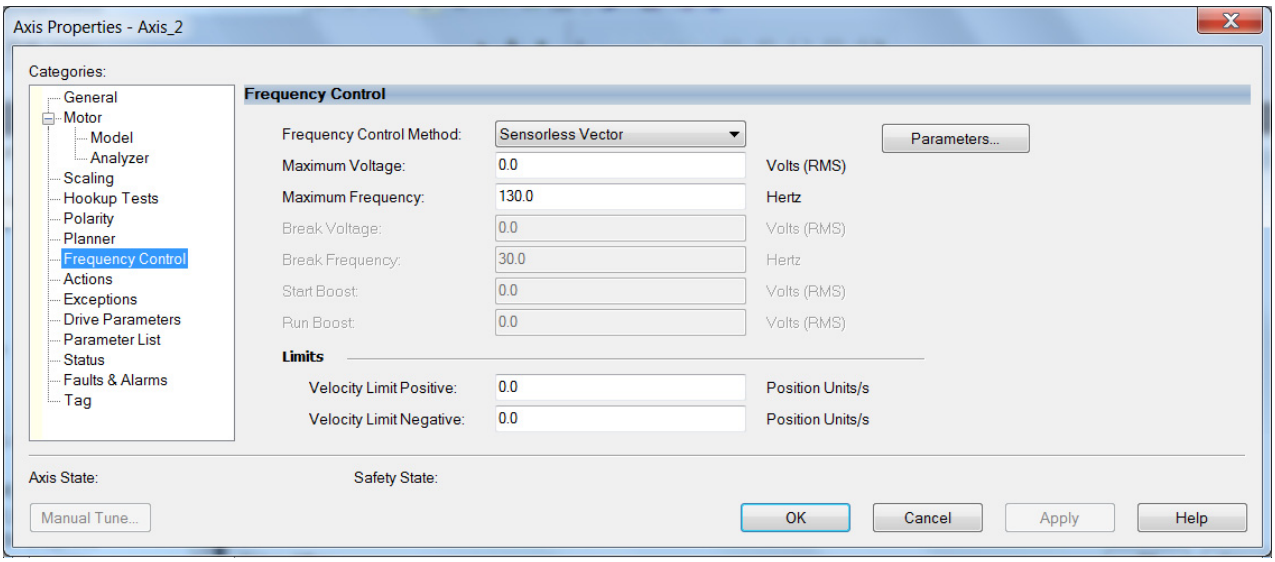

4. Enter the Basic Volts/Hertz attribute values appropriate for your application.

   Default values are shown.
5. Click Apply.
6. Select the Parameter List category.

7. The Motion Axis Parameters dialog box appears.

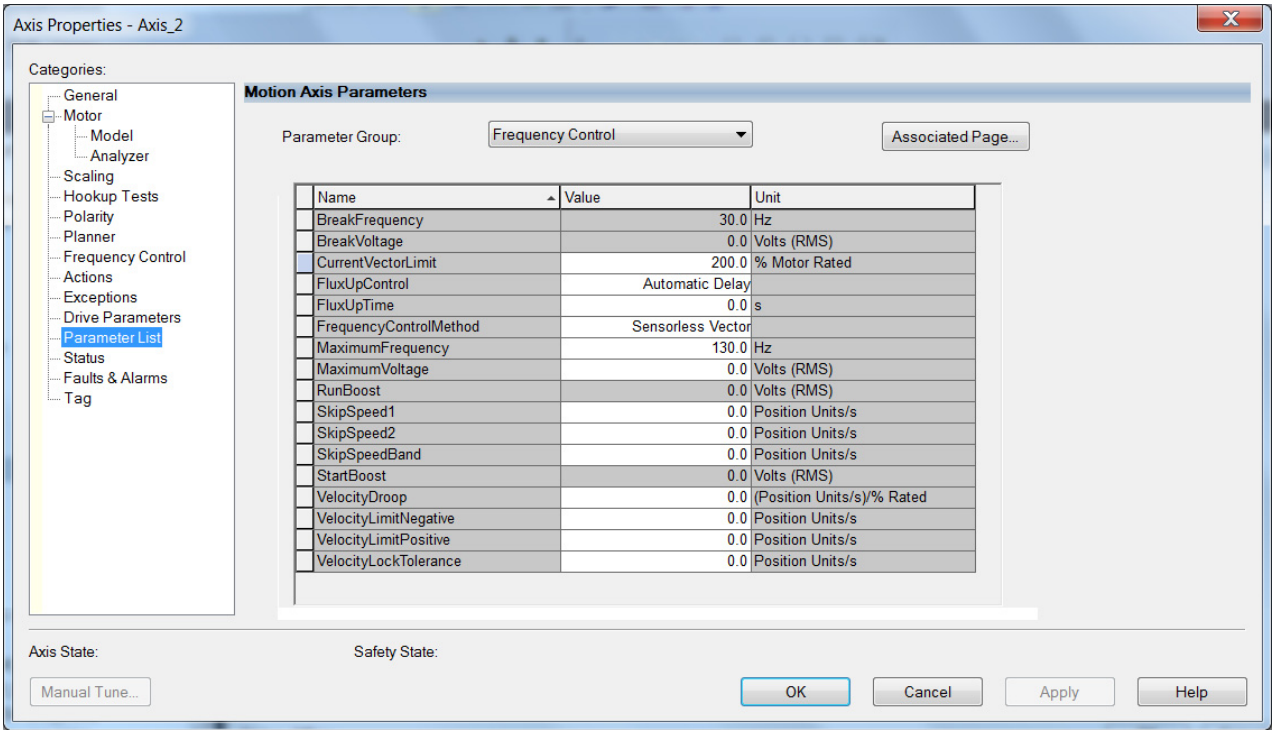

8. From the Parameter Group pull-down menu, choose Frequency Control.

9. Set the FluxUp, SkipSpeed, VelocityDroop, MaximumFrequency, MaximumVoltage, and CurrentVectorLimit attributes appropriate for your application.

   See the corresponding section in Appendix F, beginning on page 419, for information and configuration examples regarding all of these topics.

10. Click Apply.

11. Select the Motor>Model category.

    Motor model attributes are automatically estimated from the Nameplate/Datasheet parameters. For improved performance, motor tests can be run.

12. Select the Motor>Analyzer category.

13. The Analyze Motor to Determine Motor Model dialog box opens.

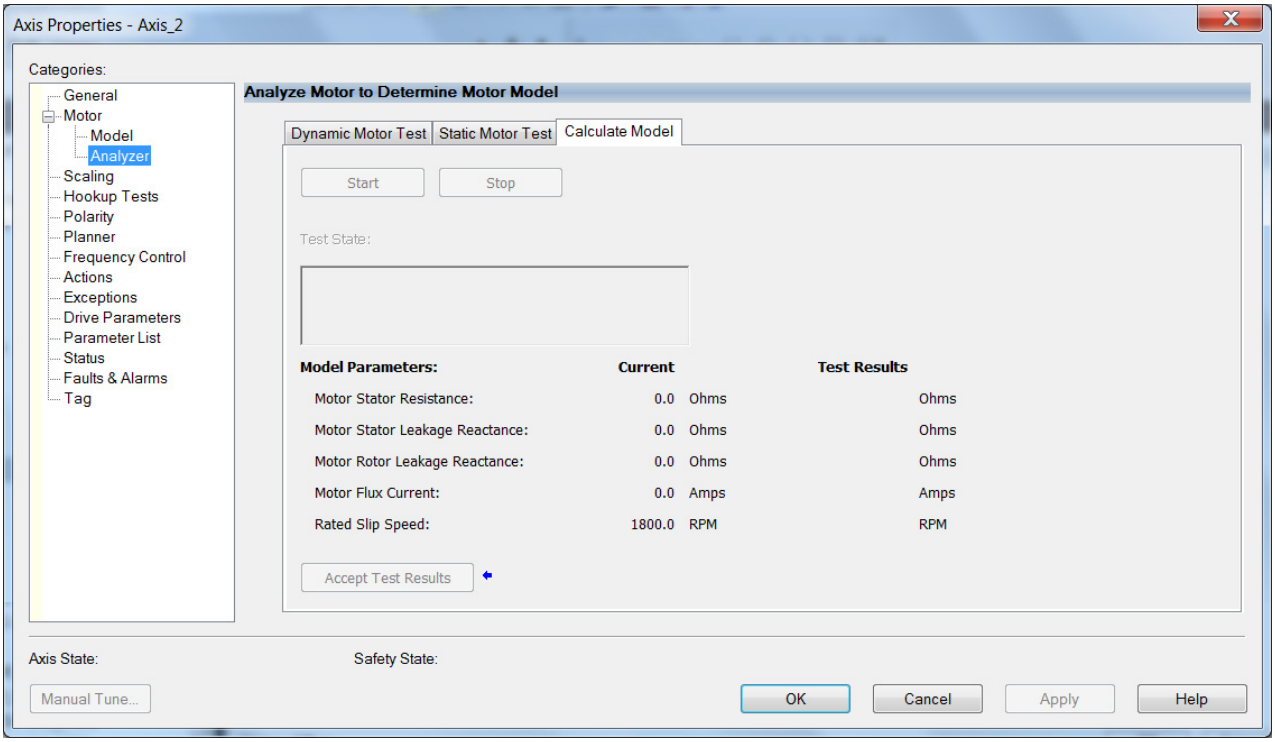

14. Click one of the motor test tabs.

    In this example, Calculate Model is chosen. See Motor Tests and Autotune Procedure on page 436 for information about each of the tests.

15. Click Start.

16. Click Accept Test Results.

17. Click OK.

Fan/Pump Volts/Hertz Method

1. Configure the General category and Motor category as shown in General and Motor Categories on page 233.
2. Select the Frequency Control category.
3. From the Frequency Control Method pull-down menu, select Fan/Pump Volts/Hertz.

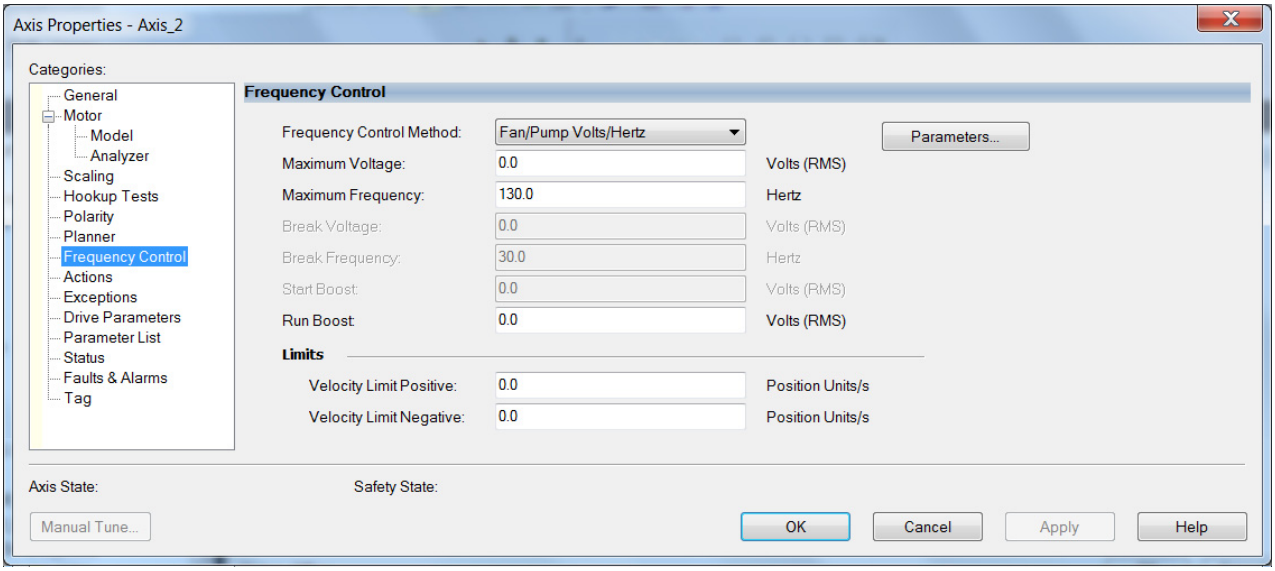

4. Enter the Basic Volts/Hertz attribute values appropriate for your application.

   Default values are shown.
5. Click Apply.
6. Select the Parameter List category.

The Motion Axis Parameters dialog box appears.

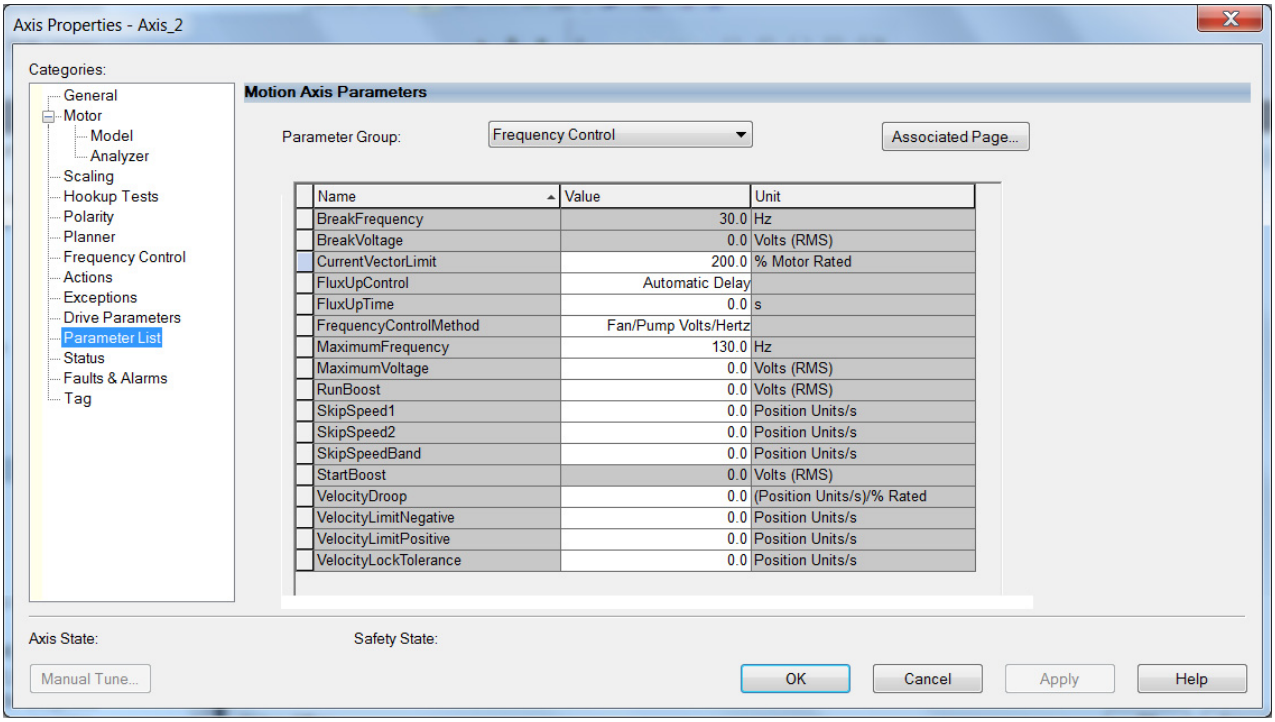

7. From the Parameter Group pull-down menu, choose Frequency Control.
8. Set the FluxUp, SkipSpeed, VelocityDroop, RunBoost, MaximumFrequency, MaximumVoltage and CurrentVectorLimit attributes appropriate for your application.

   See the corresponding section in Appendix F, beginning on page 419, for information and configuration examples regarding all of these topics.
9. Click OK.

Configure IPM Motor Closed-loop Control Axis Properties

Follow these steps to configure interior permanent-magnet (IPM) motor closed-loop axis properties.

1. In the Controller Organizer, right-click an axis and choose Properties.
2. Select the General category.

   The General and Associated Module dialog box appears.

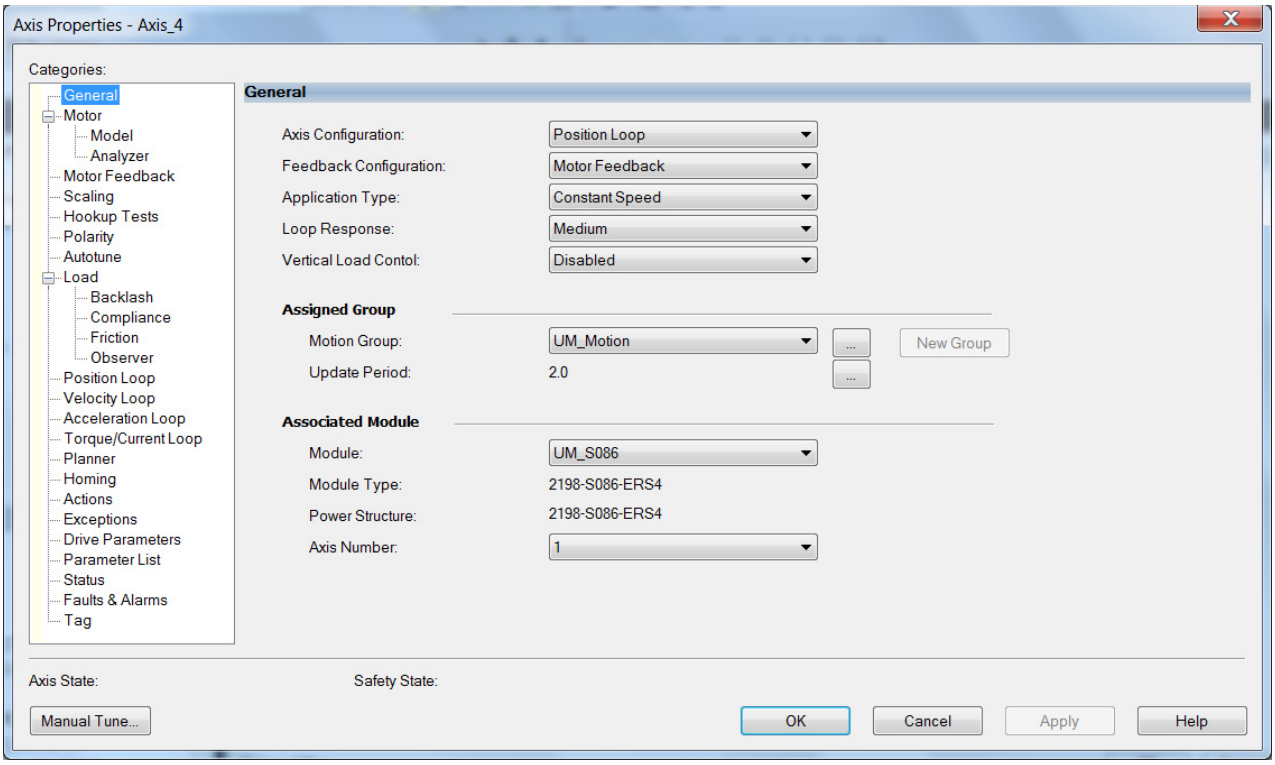

3. From the General pull-down menus, change configuration settings as needed for your application.

   IMPORTANT Frequency Control is not supported for interior permanent magnet (IPM) motors.

4. From the Associated Module>Module pull-down menu, choose your Kinetix 5700 drive.

   The drive catalog number populates the Module Type and Power Structure fields.
5. Click Apply.
6. Select the Motor category.

The Motor Device Specification dialog box appears.

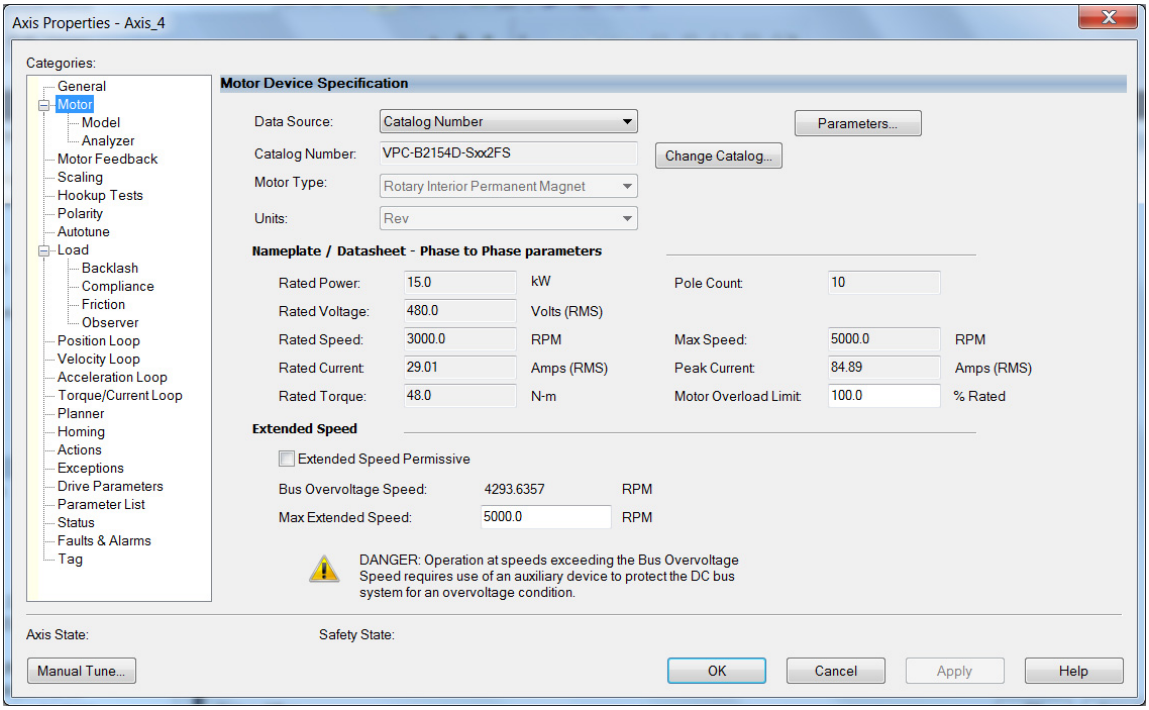

7. From the Data Source pull-down menu, choose Catalog Number.

IMPORTANT Motor NV is not a supported data source in the Logix Designer application for axes configured as interior permanent-magnet (IPM) motor closed-loop. In addition, third-party IPM motors are not supported.

8. Click Change Catalog.

   The Change Catalog Number dialog box appears.

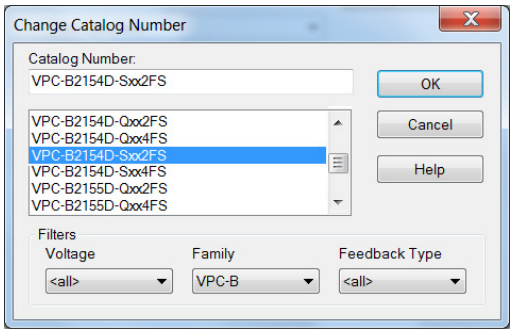

9. Select the motor catalog number appropriate for your application.

   To verify the motor catalog number, refer to the motor name plate.

10. Click OK to close the Change Catalog Number dialog box.

11. Click Apply.

    Motor data specific to your motor appears in the Nameplate / Datasheet - Phase to Phase parameters field.

12. For Extended Speed operation, check Extended Speed permissive in the Extended Speed field. See Phase Loss Detection on page 454, for more information.

13. Select the Scaling category and edit the default values as appropriate for your application.

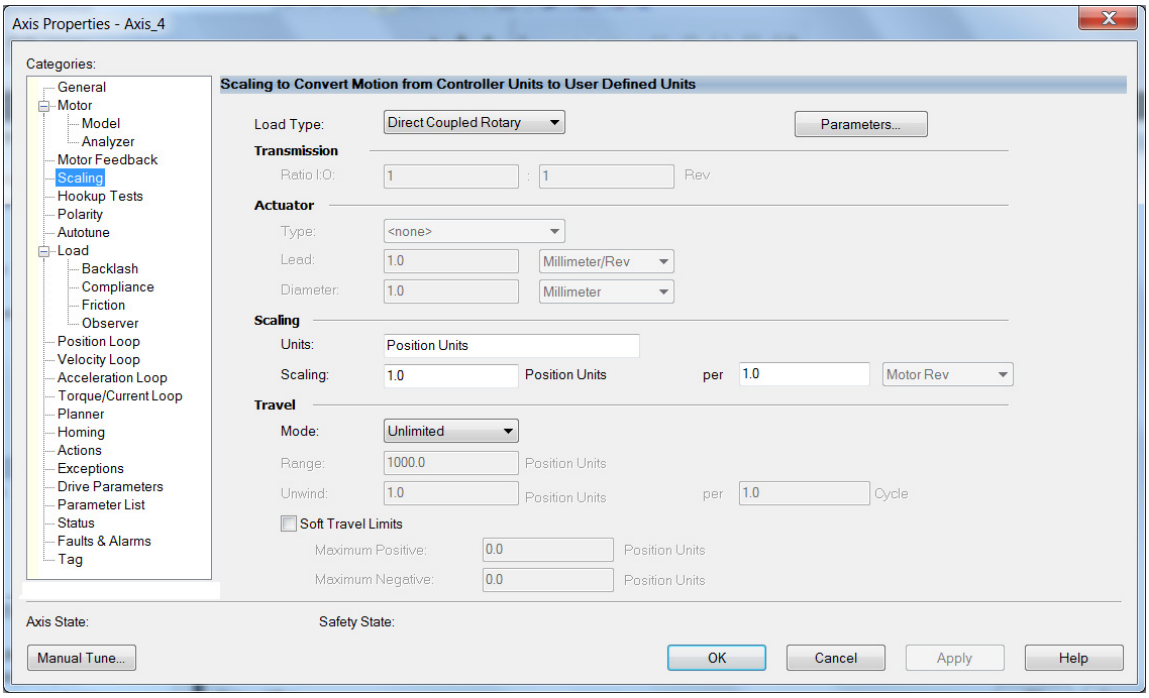

14. Click Apply, if you make changes.

15. Select the Load category and edit the default values as appropriate for your application.

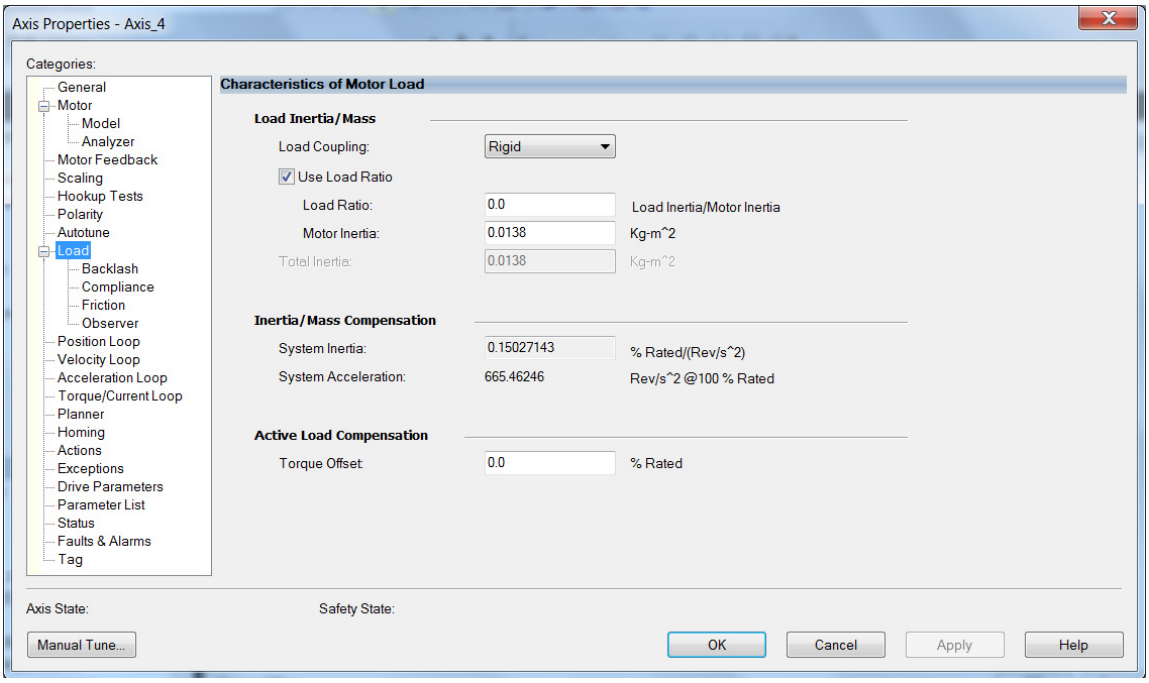

16. Click Apply, if you make changes.

17. Select the Actions category.

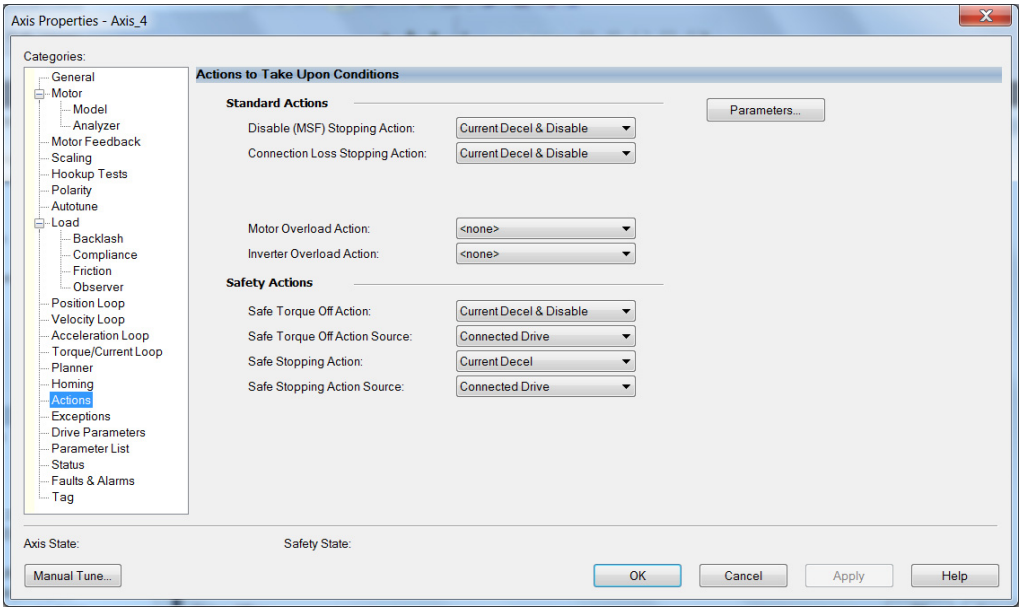

From this dialog box, you can program actions and change the action for exceptions (faults). Refer to Logix 5000 Controller and Drive Module Behavior on page 281 for more information.

18. Select the Parameter List category.

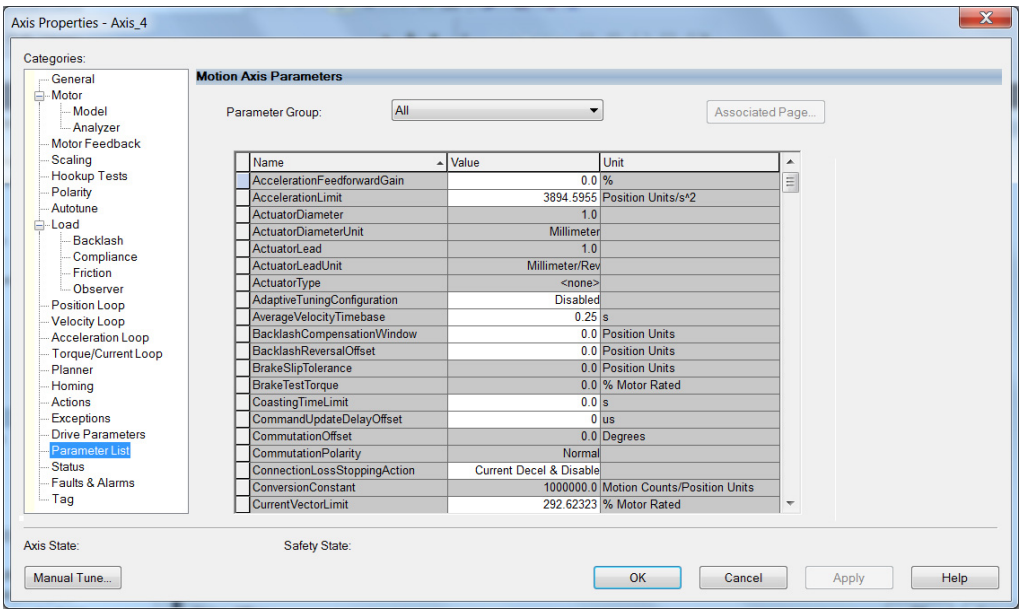

From this dialog box you can set brake engage and release delay times for servo motors. For recommended motor brake delay times, refer to the Kinetix Rotary Motion Specifications Technical Data, publication KNX-TD001.

19. Click OK.

20. Repeat step 1 through step 19 for each servo motor axis.

Configure SPM Motor Closed-loop Control Axis Properties

Follow these steps to configure surface permanent-magnet (SPM) motor closed-loop axis properties.

1. In the Controller Organizer, right-click an axis and choose Properties.
2. Select the General category.

   The General and Associated Module dialog box appears.

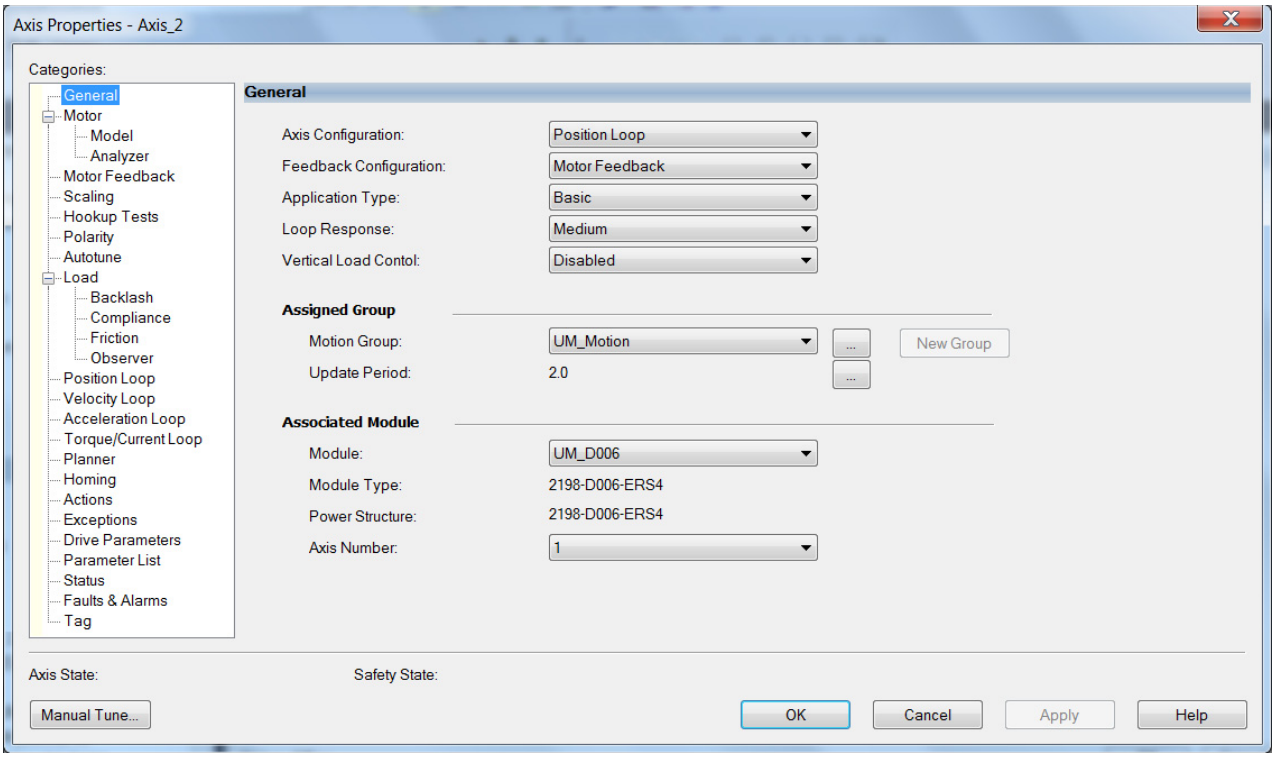

3. From the General pull-down menus, change configuration settings as needed for your application.

   IMPORTANT Frequency Control is not supported for permanent magnet motors.

4. From the Associated Module>Module pull-down menu, choose your Kinetix 5700 drive.

   The drive catalog number populates the Module Type and Power Structure fields.
5. Click Apply.
6. Select the Motor category.

The Motor Device Specification dialog box appears.

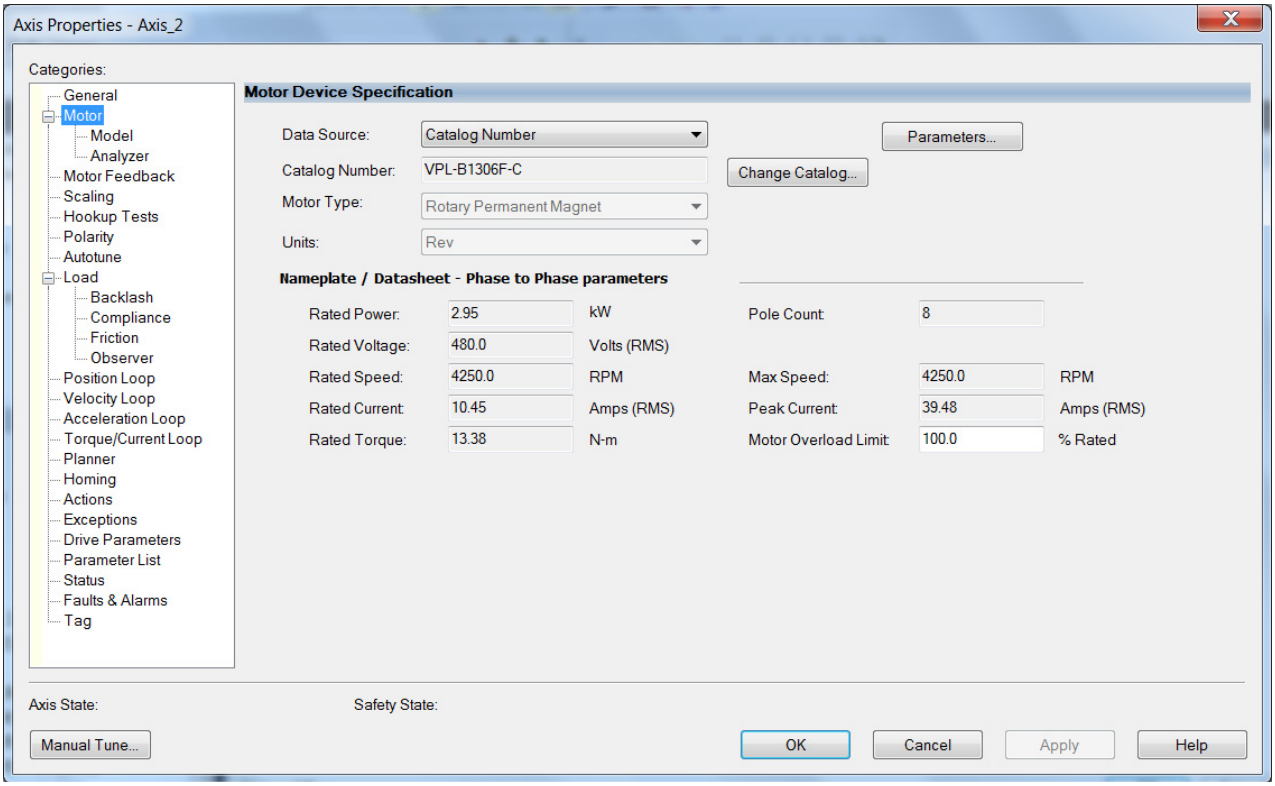

7. From the Data Source pull-down menu, choose Catalog Number.
8. Click Change Catalog.

   The Change Catalog Number dialog box appears.

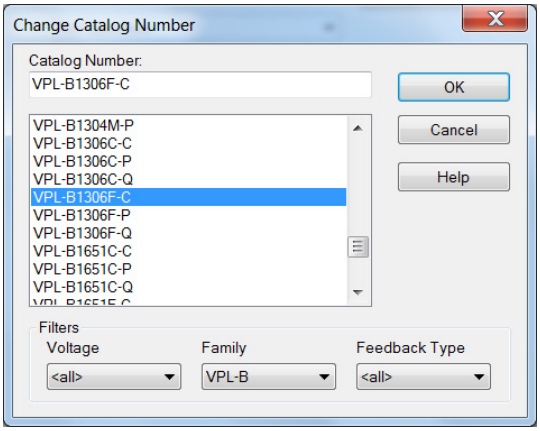

9. Select the motor catalog number appropriate for your application.

   To verify the motor catalog number, refer to the motor name plate.
10. Click OK to close the Change Catalog Number dialog box.
11. Click Apply.

    Motor data specific to your motor appears in the Nameplate / Datasheet - Phase to Phase parameters field.

12. Select the Scaling category and edit the default values as appropriate for your application.

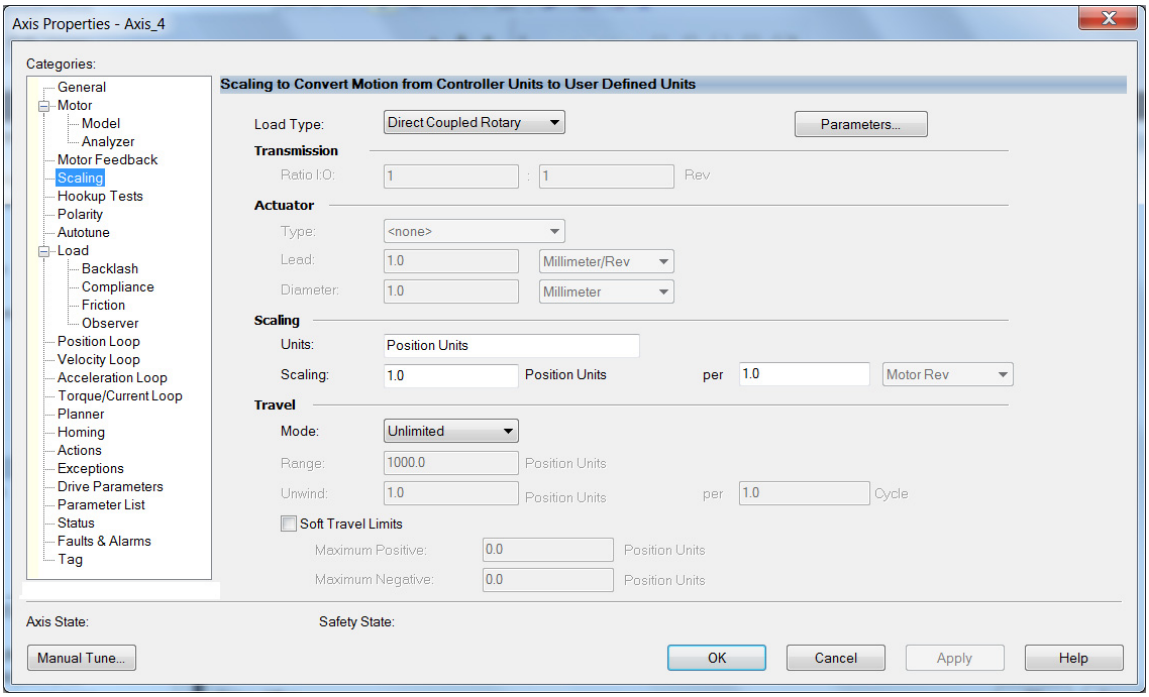

13. Click Apply, if you make changes.

14. Select the Load category and edit the default values as appropriate for your application.

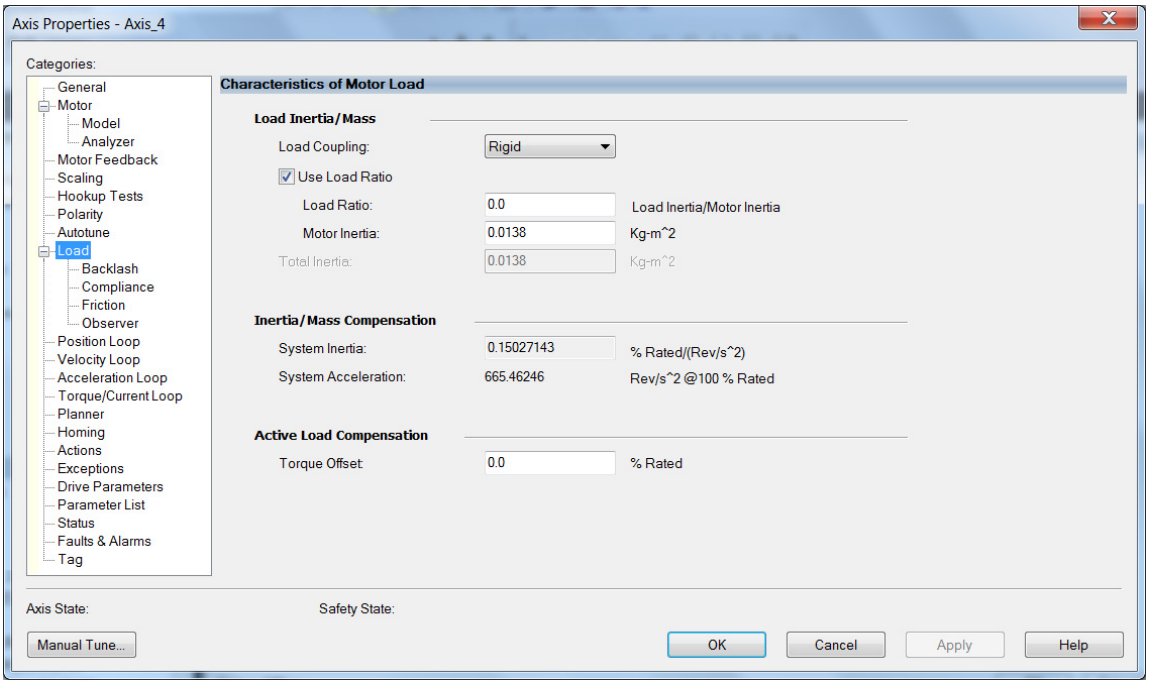

15. Click Apply, if you make changes.

16. Select the Actions category.

The Actions to Take Upon Conditions dialog box appears.

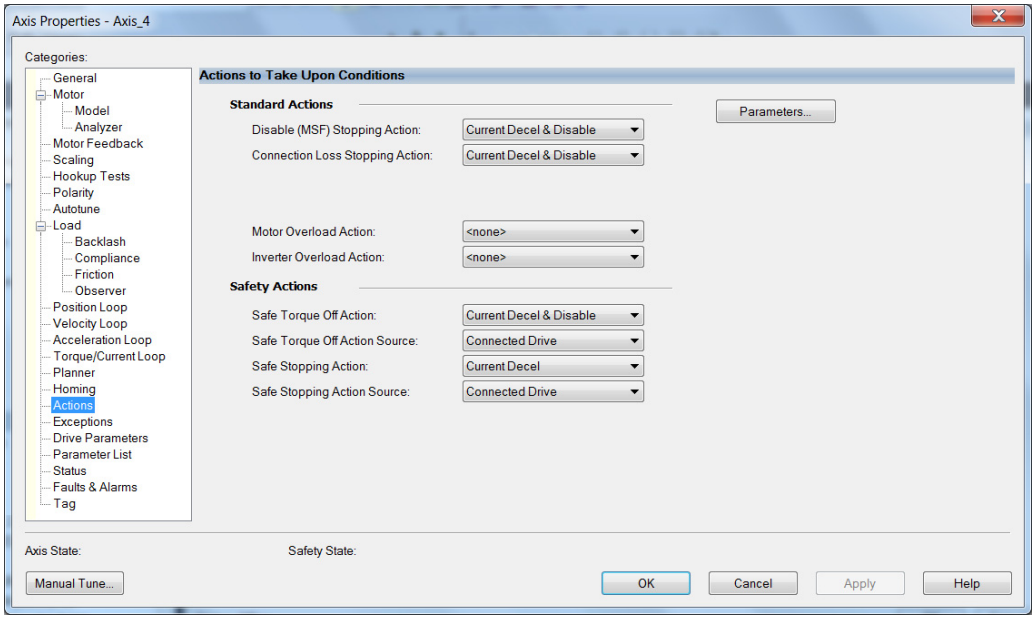

From this dialog box you can program actions for the drive module to take. Refer to Logix 5000 Controller and Drive Module Behavior on page 281 for more information.

17. Select the Exceptions category.

The Action to Take Upon Exception Condition dialog box appears.

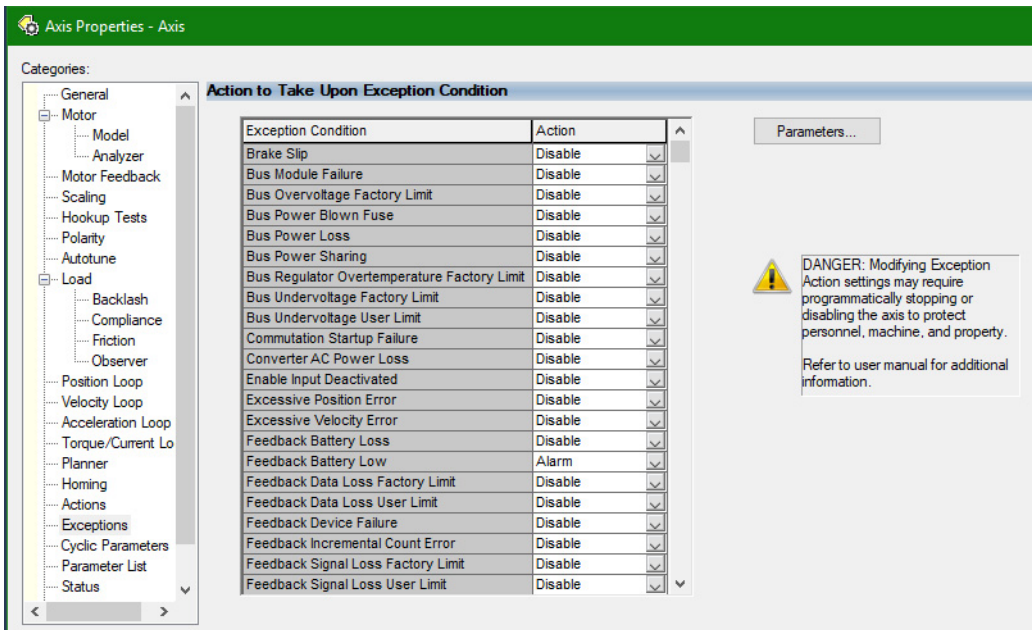

From this dialog box you can change the action for exceptions (faults). Refer to Logix 5000 Controller and Drive Module Behavior on page 281 for more information.

TIP In the Logix Designer application, version 32 and later, Disable replaced StopDrive as the default Action.

18. Select the Parameter List category.

The Motion Axis Parameters dialog box appears.

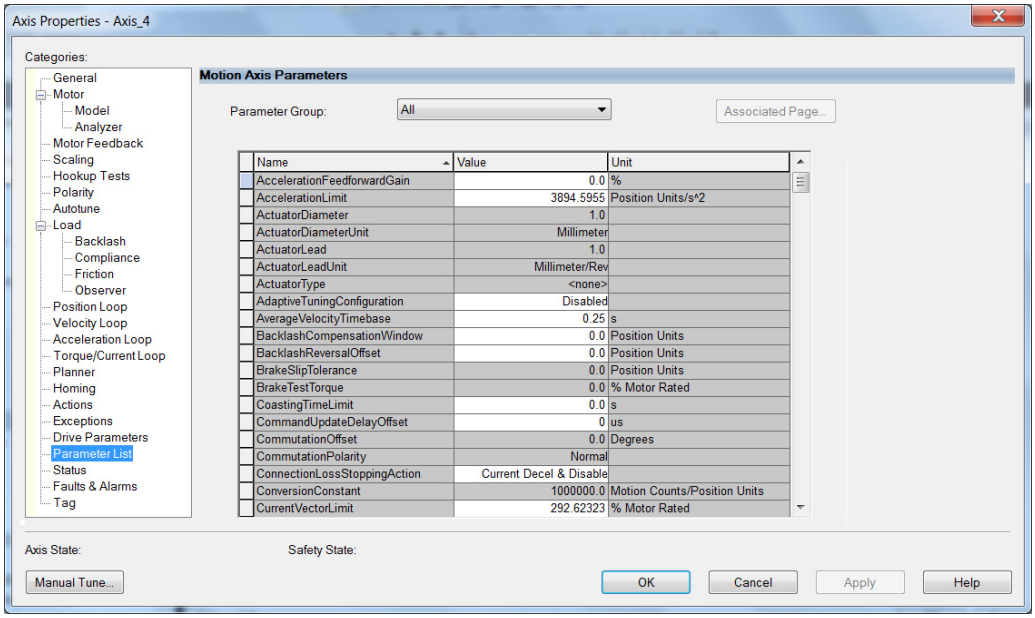

From this dialog box you can set brake engage and release delay times for servo motors. For recommended motor brake delay times, refer to the Kinetix Rotary Motion Specifications Technical Data, publication KNX-TD001.

19. Click OK.

20. Repeat step 1 through step 19 for each servo motor axis.

Configure Induction-motor Closed-loop Control Axis Properties

Follow these steps to configure induction-motor closed-loop control axis properties.

1. In the Controller Organizer, right-click an axis and choose Properties.
2. Select the General category.

   The General and Associated Module dialog box appears.

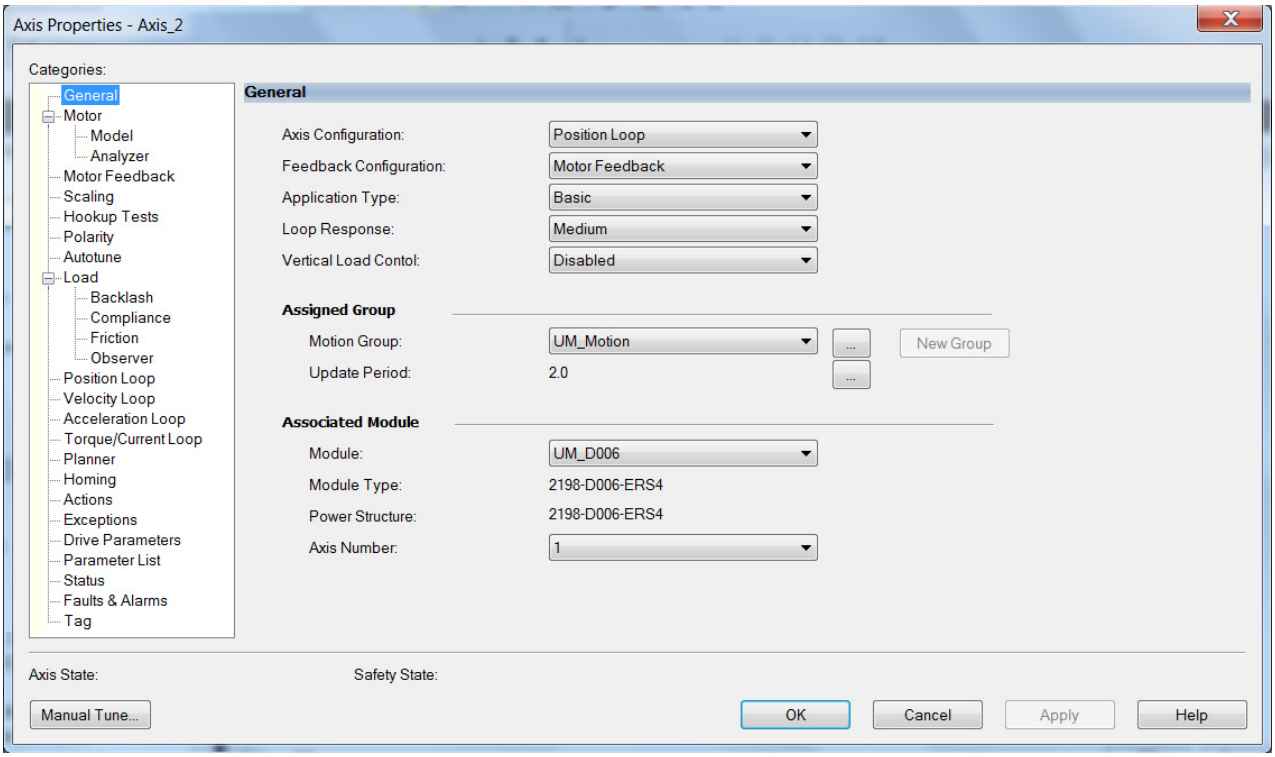

3. From the General pull-down menus, change configuration settings as needed for your application.
4. From the Associated Module>Module pull-down menu, choose your Kinetix 5700 drive.

   The drive catalog number populates the Module Type and Power Structure fields.
5. Click Apply.
6. Select the Motor category.

The Motor Device Specification dialog box appears.

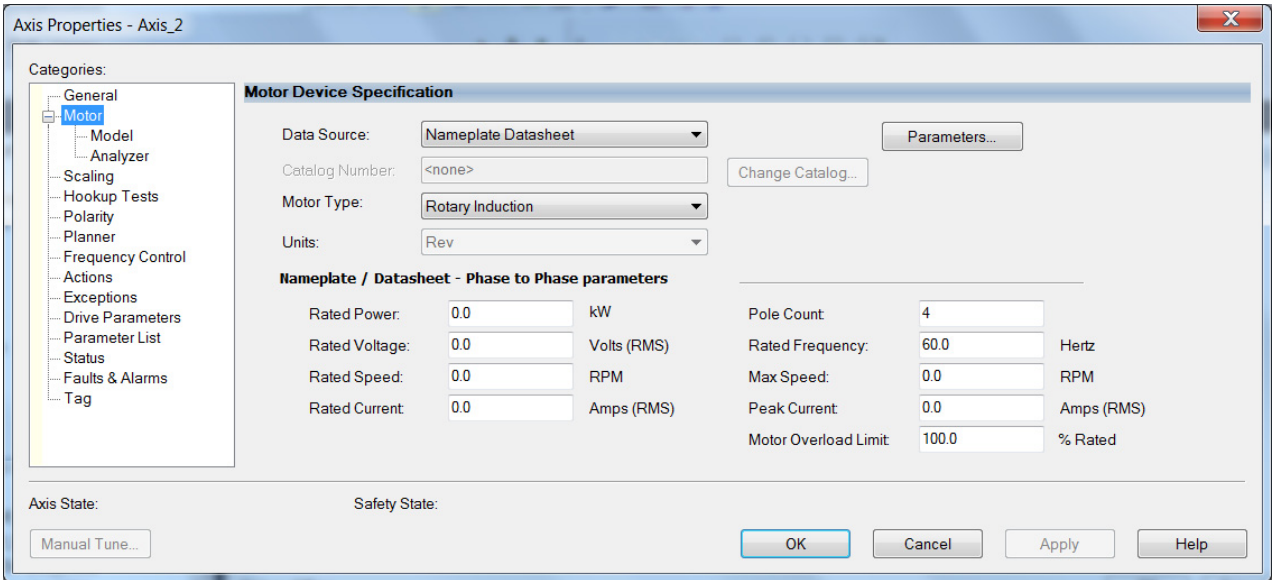

7. From the Data Source pull-down menu, choose Nameplate Datasheet.

   This is the default setting. If you have a Kinetix HPK asynchronous rotary motor, refer to page 247 to see how to populate the Nameplate / Datasheet parameters by selecting the motor catalog number.

IMPORTANT	When you configure Kinetix HPK motor parameters by selecting the motor catalog number, you must also configure the Polarity category. This requirement applies to only Kinetix HPK asynchronous motors. See Knowledgebase document 732760 for more information.

IMPORTANT	Motor NV is not a supported data source in the Logix Designer application for axes configured as Induction-motor closed-loop.

   a. Select the Polarity category.

b. For Motor Polarity, click Inverted (default is Normal).

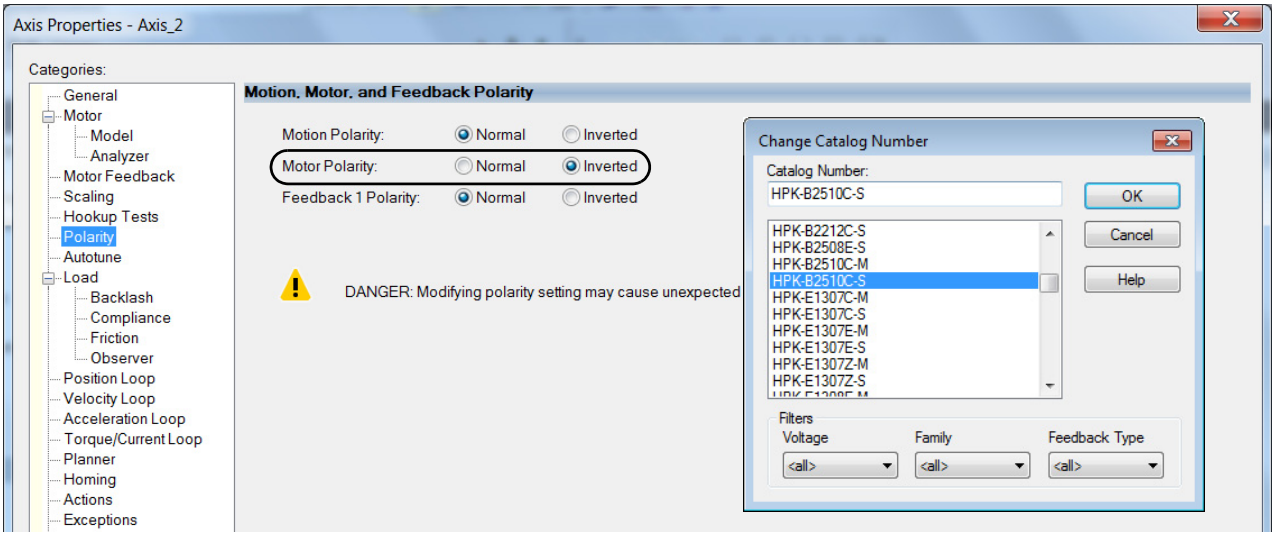

c. Click Apply and return to the Motor category.

8. From the Motor Type pull-down menu, choose Rotary Induction.

9. From the motor nameplate or datasheet, enter the phase-to-phase values for your motor.

   See Motor Category on page 434 for a motor performance datasheet example. Also see Motor Nameplate Datasheet Entry for Custom Motor Applications, publication 2198-AT002.

10. Click Apply.

11. Select the Motor Feedback category.

    The Motor Feedback Device Specification dialog box appears.

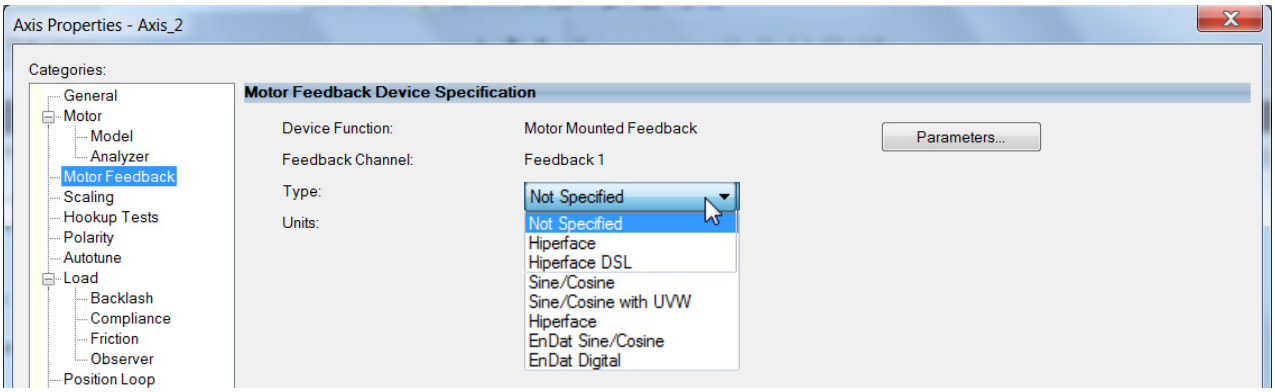

12. From the Type pull-down menu, choose the feedback type appropriate for your application.

    See Configure Feedback Properties on page 258 for feedback configuration examples.

13. Click Apply.

14. Select the Scaling category and edit the default values as appropriate for your application.

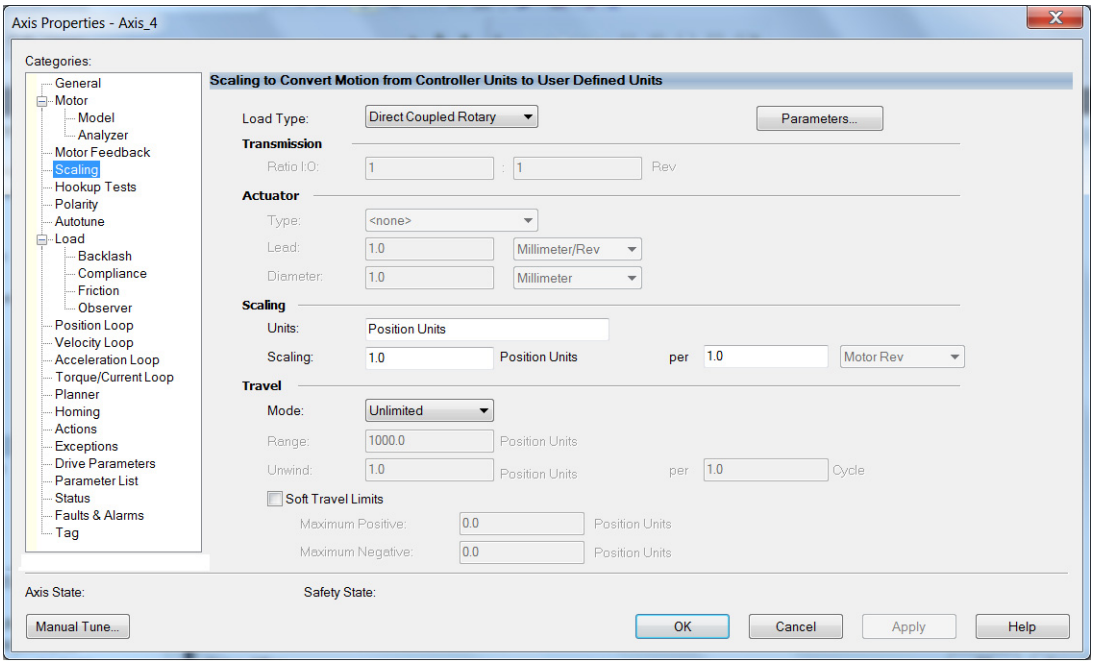

15. Click Apply, if you make changes.

16. Select the Actions category.

    The Actions to Take Upon Conditions dialog box appears.

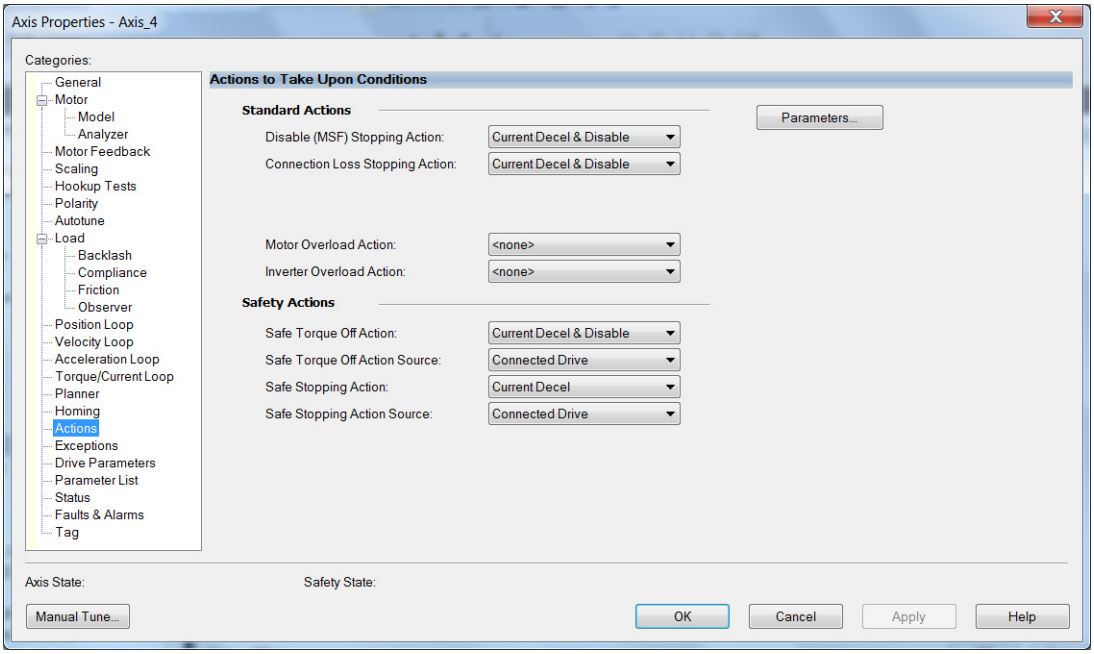

    From this dialog box you can program actions for the drive module to take. Refer to Logix 5000 Controller and Drive Module Behavior on page 281 for more information.

17. Select the Exceptions category.

The Action to Take Upon Exception Condition dialog box appears.

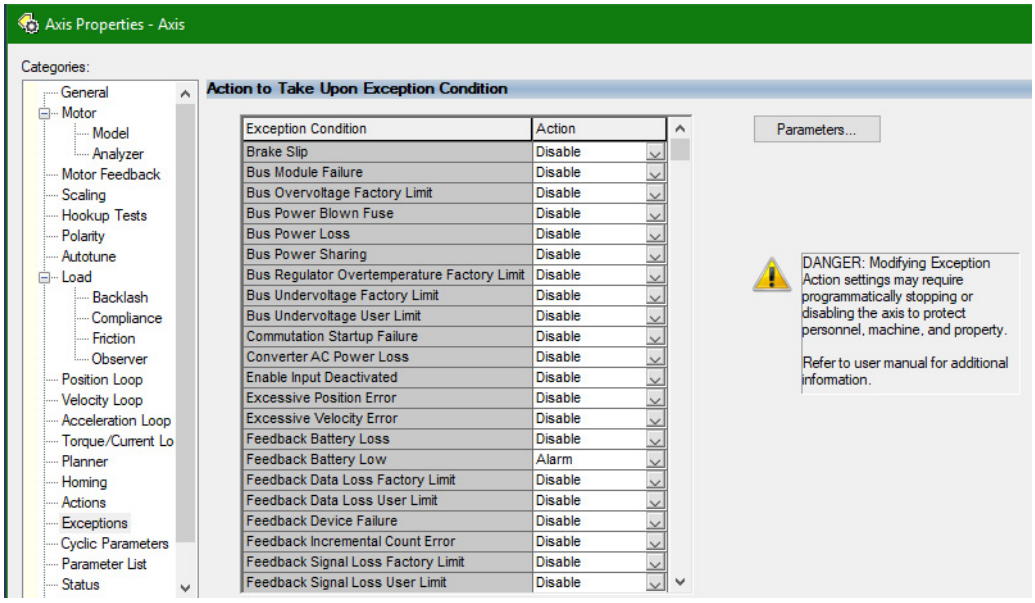

From this dialog box you can change the action for exceptions (faults). Refer to Logix 5000 Controller and Drive Module Behavior on page 281 for more information.

TIP In the Logix Designer application, version 32 and later, Disable replaced StopDrive as the default Action.

18. Select the Parameter List category.

The Motion Axis Parameters dialog box appears.

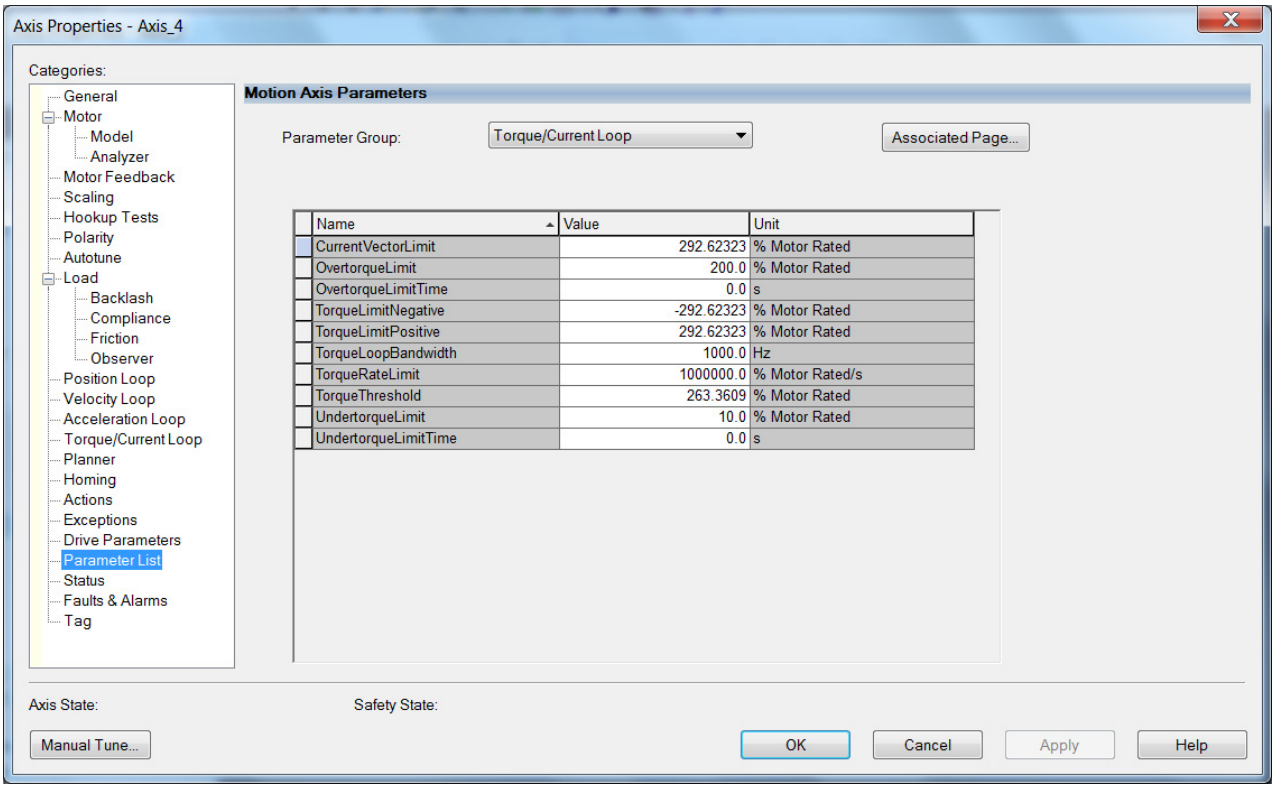

19. From the Parameter Group pull-down menu, choose Torque/Current Loop.
20. Set the FluxUp attributes appropriate for your application.

    See the corresponding section in Appendix F, beginning on page 419, for information and configuration examples regarding this topic.

IMPORTANT The Automatic FluxUpControl setting is recommended for best autotune results.

21. Click Apply.
22. Select the Load category and edit the default values as appropriate for your application.

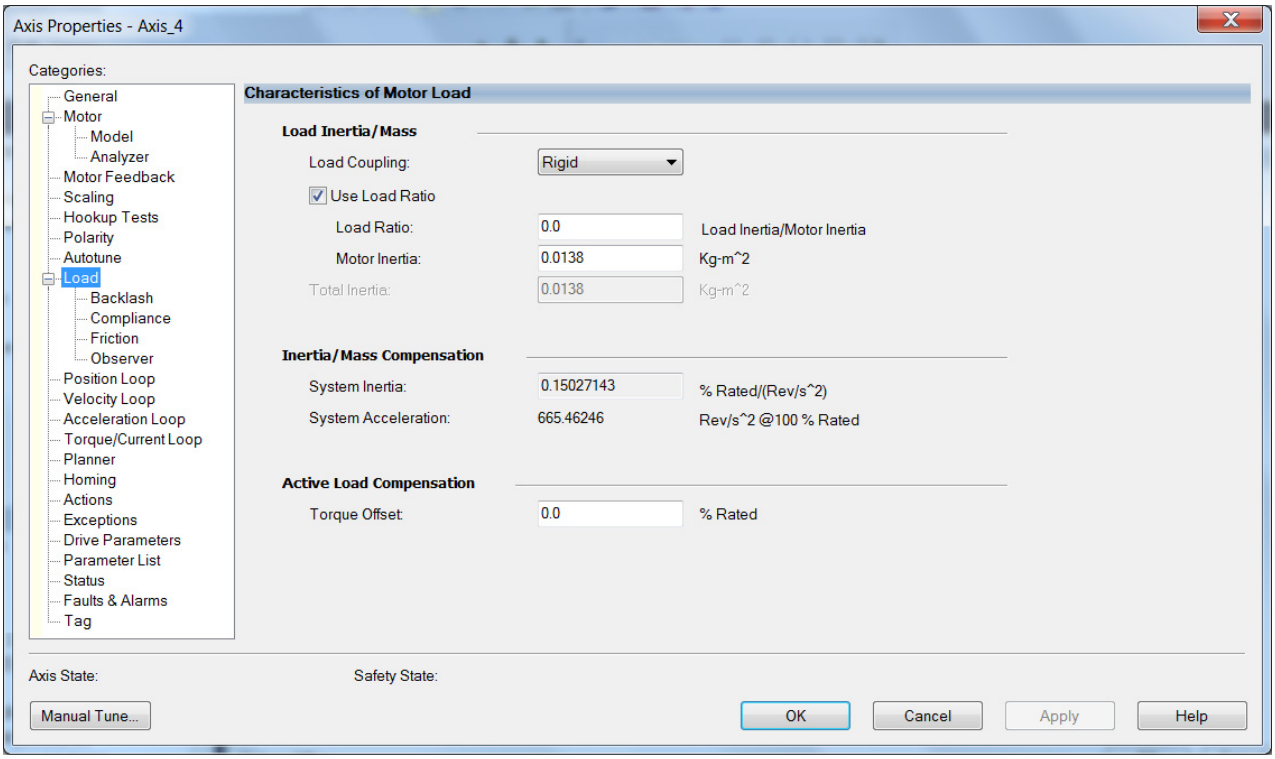

23. Click Apply, if you make changes.
24. Click OK.
25. Select the Motor>Model category.

    Motor model attributes are automatically estimated from the Nameplate/Datasheet parameters. For improved performance, motor tests can be run.

26. The Analyze Motor to Determine Motor Model dialog box opens.

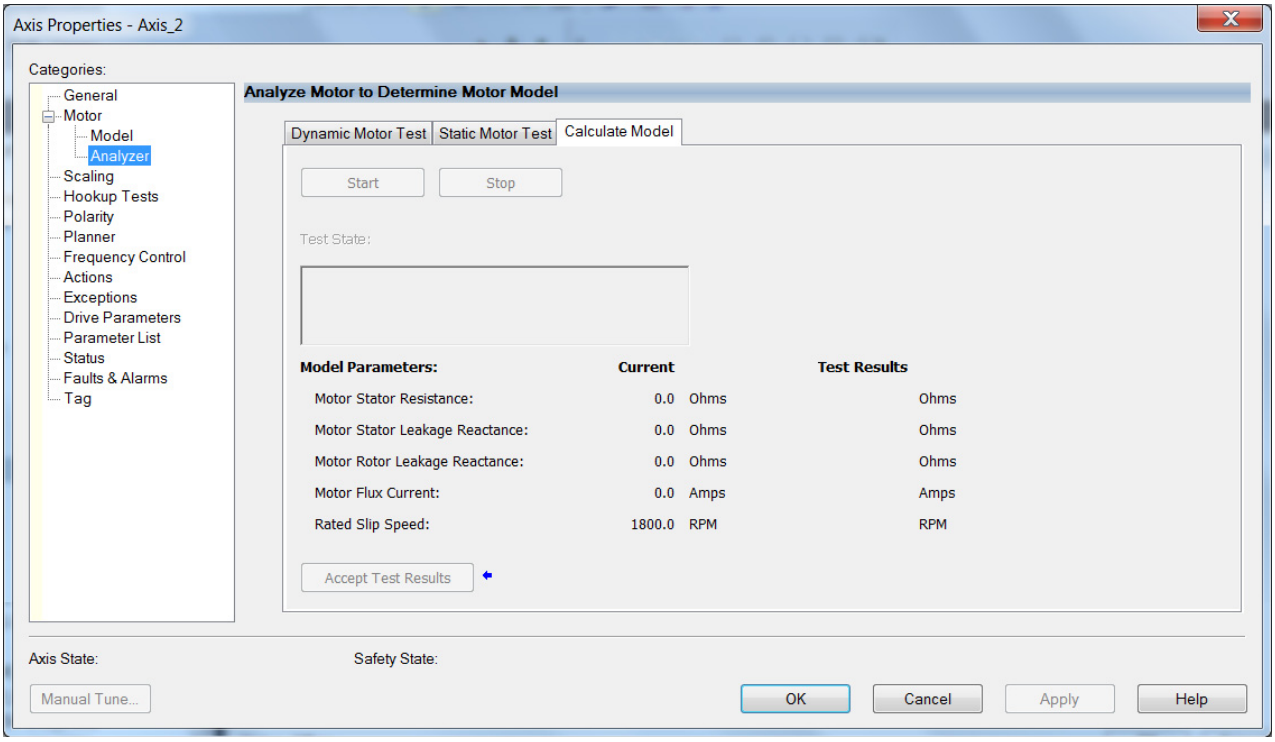

IMPORTANT The Dynamic motor test cannot be run without a non-zero motor inertia.

27. Click the tab corresponding to the Motor Test you want to run.

    See Motor Tests and Autotune Procedure on page 436 for information about each of the tests.

28. Click Start.

29. Click Accept Test Results.

30. Click Apply.

31. Select the Autotune category.

32. Repeat step 1 through step 32 for each induction motor axis.

Configure Feedback Properties

This section provides more configuration detail for module properties and axis properties when incremental feedback types are used in your application.

Configure Module Properties

Configure the module properties of your Kinetix 5700 servo drive depending on how you intend to use the feedback connectors.

1. Right-click a drive in the Controller Organizer to configure and choose Properties.

   The Module Properties dialog box appears.

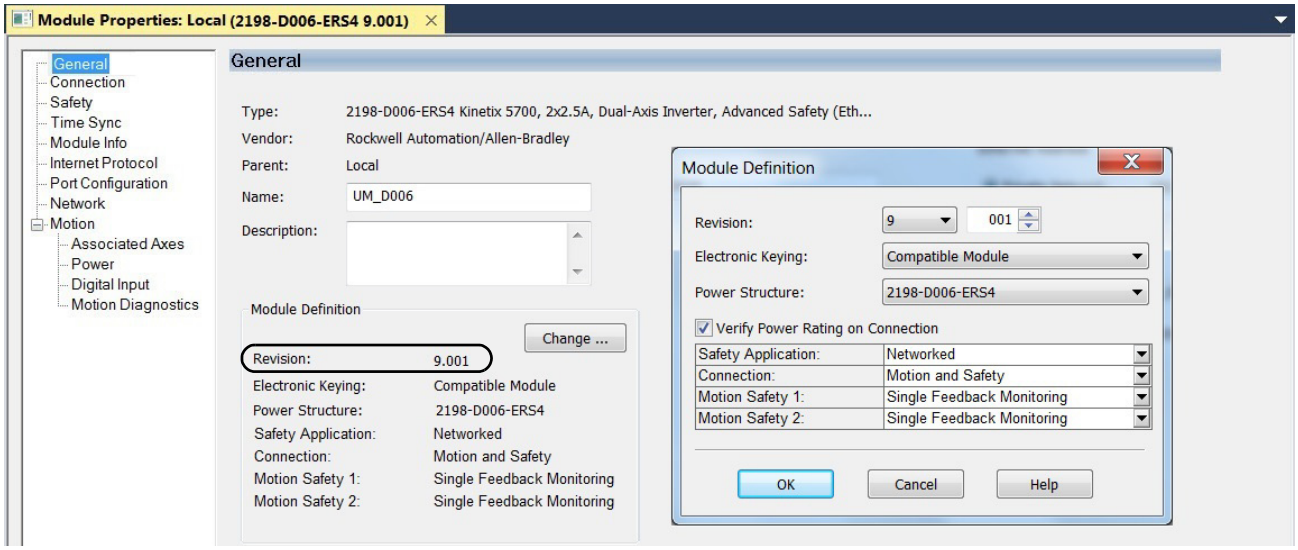

2. Under Module Definition click Change.

   The Module Definition dialog box appears.

   Depending on the Module Definition revision selection, alternate feedback types can be selected. However, 2198-*xxxx*-ERS4 drives only appear in firmware revision 9.001 or later.

3. Click the Associated Axes category.

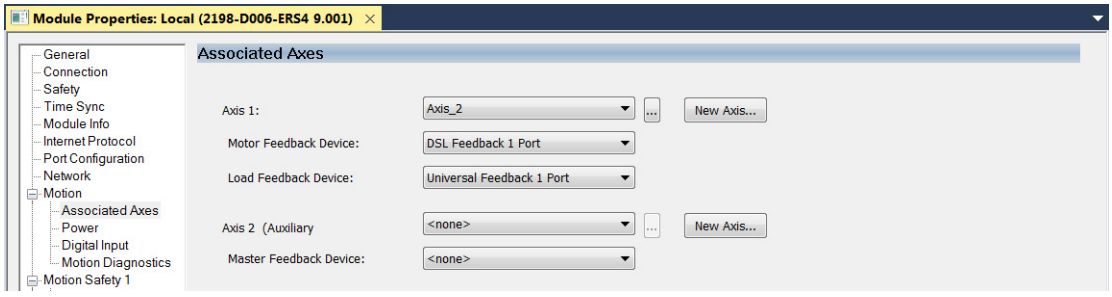

4. Configure each axis for Motor feedback, Load feedback, and Master feedback devices appropriate for your application.

See Continue Inverter Configuration on page 220 for more information on configuring module properties for dual-axis and single-axis inverters.

IMPORTANT The Logix Designer application prevents making feedback port assignments with incompatible feedback types. For example, you cannot assign the same port for multiple devices. The same port cannot be used for Motor Feedback Device, Load Feedback Device, and Master Feedback Device.

Table 124 - Motor Feedback Compatibility

Motor Feedback Device Option	Feedback Type		Description	Feedback Connector
Universal Feedback 1 Port	• Digital AqB • Digital AqB with UVW • Sine/Cosine • Sine/Cosine with UVW	Incremental	Applies to Allen-Bradley Kinetix MPL (-H) rotary motors, Kinetix MPAS (direct-drive) linear actuators, LDAT-Series (-*x*B*x*) linear thrusters, and LDC-Series™ linear motors wired to the 2198-K57CK-D15M universal connector kit.	15-pin universal feedback (UFB)
	• EnDat Sine/Cosine • EnDat Digital	High-resolution single-turn and multi-turn, absolute	Applies to Allen-Bradley Kinetix RDB and VPC-B*xxxxx*-Y motors wired to the 2198-K57CK-D15M universal connector kit.	
	Hiperface		Applies to Allen-Bradley Kinetix MPL, MPM, MPF, MPS (-M/S or -V/E), and VPC-B*xxxxx*-S and VPC-B3004*x*-M rotary motors; Kinetix MPAS (ballscrew), MPAR, MPAI, linear actuators; Kinetix HPK rotary motors; and LDAT-Series (-*x*D*x*) linear thrusters wired to the 2198-K57CK-D15M universal connector kit.	
DSL Feedback 1 Port			Applies to Allen-Bradley Kinetix MPL, MPM, MPF, MPS (-M/S or -V/E) and VPC-B*xxxxx*-Q rotary motors; Kinetix MPAS (ballscrew), MPAR, MPAI linear actuators; Kinetix HPK rotary motors; and LDAT-Series (-*x*D*x*) linear thrusters wired to the 2198-H2DCK converter kit.	2-pin motor feedback (MF)
	Hiperface DSL		Applies to Allen-Bradley Kinetix VPL, VPF, VPH, VPS and VPC-B*xxxxx*-Q rotary motors and Kinetix VPAR electric cylinders wired to the 2198-KITCON-DSL connector kit.	

IMPORTANT Unprogrammed Smart feedback devices (Hiperface Sin/Cos, Hiperface DSL, EnDat Digital, and EnDat Sin/Cos) are not supported. Unprogrammed as load or feedback-only feedback types are supported, except unprogrammed Hiperface DSL encoders. Contact your local distributor or Rockwell Automation representative for support options.

This example shows acceptable feedback port assignments.

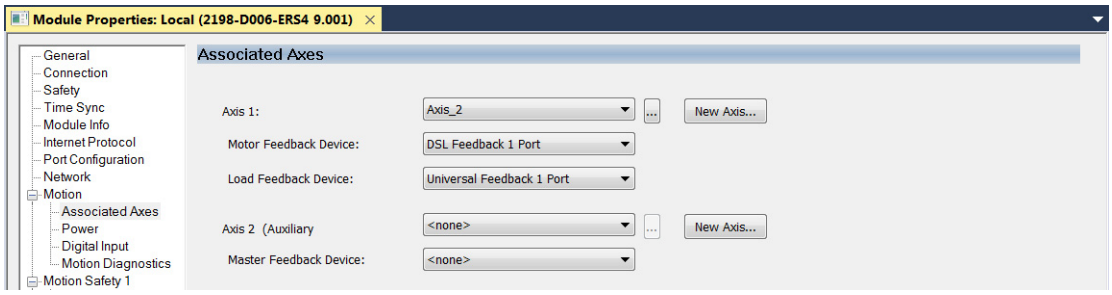

5. Click OK.

Configure Axis Properties

In this section you configure the axis properties of your Kinetix 5700 servo drive for the type of feedback you intend use in your application.

Table 125 defines valid feedback assignments for each feedback type.

Table 125 - Valid Feedback Assignments

Feedback Type		Permanent Magnet Motors		Induction Motors		
Hiperface DSL	High-resolution single-turn and multi-turn, absolute	Motor feedback	Load feedback	Motor feedback	Load feedback	Master feedback
Hiperface						
Digital AqB	Incremental	N/A				
Digital AqB with UVW		Motor feedback	N/A	N/A	N/A	N/A
Sine/Cosine		N/A	Load feedback	Motor feedback	Load feedback	Master feedback
Sine/Cosine with UVW		Motor feedback	N/A	N/A	N/A	N/A
EnDat Sine/Cosine	High-resolution single-turn and multi-turn, absolute	Motor feedback	Load feedback	Motor feedback	Load feedback	Master feedback
EnDat Digital						

Digital AqB (TTL) Feedback

In this example, a motor feedback device is configured for Digital AqB feedback.

IMPORTANT When Motor Mounted Feedback is the Device Function, Digital AqB (without UVW) is not a valid feedback type for permanent magnet motors.

1. In the Controller Organizer, right-click an axis and choose Properties.
2. Select the Motor Feedback category.

   The Motor Feedback Device Specification dialog box appears.

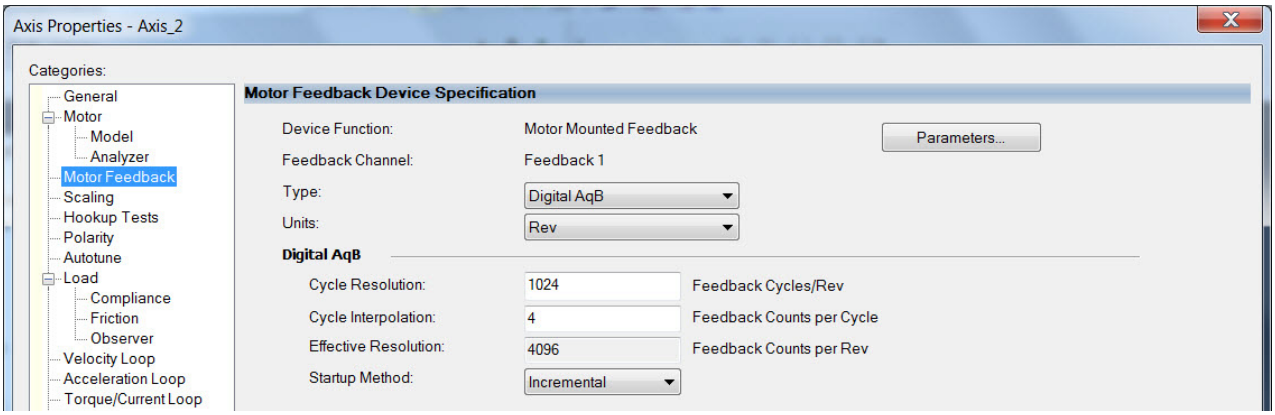

3. Configure the device function and type.

   In this example, Motor Feedback is the device function and Digital AqB is the feedback type.

4. Enter values for the Digital AqB specification fields.

   The only valid value for Cycle Interpolation is 4.
5. From the Startup Method pull-down menu, choose Incremental.
6. Click Apply.

TIP When the Device Function is Load-Side Feedback or Master Feedback, configuration is identical to Motor Mounted Feedback.

Digital AqB with UVW (TTL w/Hall) Feedback

In this example, a motor feedback device is configured for Digital AqB with UVW feedback.

IMPORTANT When Motor Mounted Feedback is the Device Function, Digital AqB with UVW is the only valid feedback type for permanent magnet motors.

1. In the Controller Organizer, right-click an axis and choose Properties.
2. Select the Motor Feedback category.

   The Motor Feedback Device Specification dialog box appears.

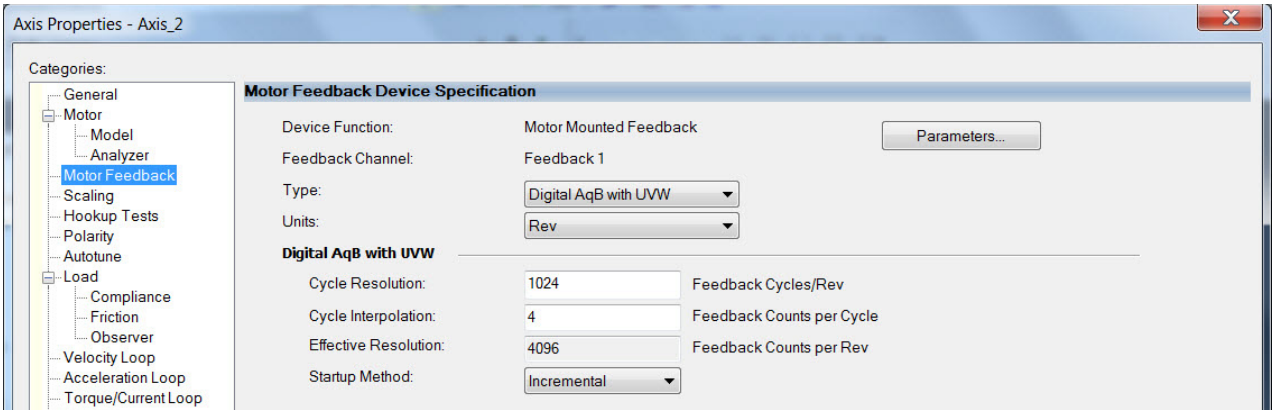

3. Configure the device function and type.

   In this example, Motor Feedback is the device function and Digital AqB with UVW is the feedback type.
4. Enter values for the Digital AqB with UVW specification fields.

   The only valid value for Cycle Interpolation is 4.
5. From the Startup Method pull-down menu, choose Incremental.
6. From the Alignment pull-down menu, choose Not Aligned.
7. Click Apply.

Sine/Cosine Feedback

In this example, a motor feedback device is configured for Sine/Cosine feedback.

IMPORTANT When Motor Mounted Feedback is the Device Function, Sine/Cosine is not a valid feedback type for permanent magnet motors.

1. In the Controller Organizer, right-click an axis and choose Properties.
2. Select the Motor Feedback category.

   The Motor Feedback Device Specification dialog box appears.

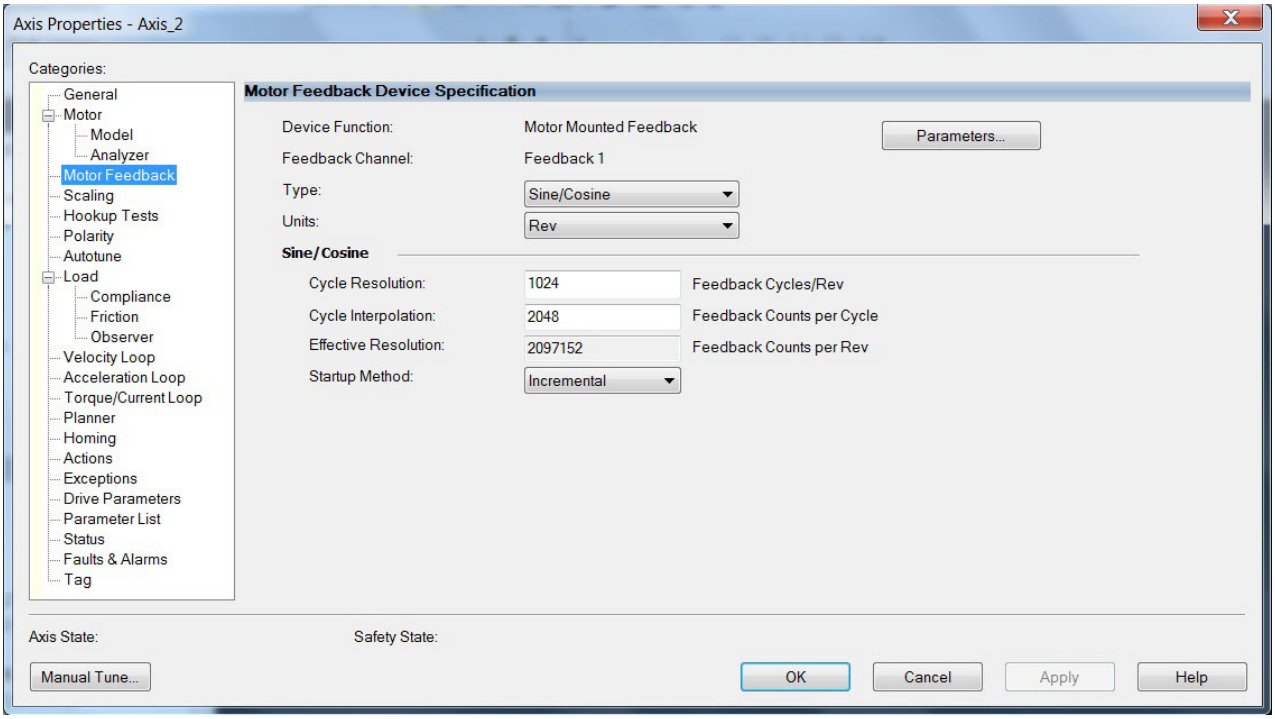

3. Configure the device function and type.

   In this example, Motor Feedback is the device function and Sine/Cosine is the feedback type.
4. Enter values for the Sine/Cosine specification fields.

   The only valid values for Cycle Interpolation are powers of 2 from 4 through 65536.
5. From the Startup Method pull-down menu, choose Incremental.
6. Click Apply.

TIP When the Device Function is Load-Side Feedback or Master Feedback, configuration is identical to Motor Mounted Feedback.

Sine/Cosine with Hall Feedback

In this example, a motor feedback device is configured for Sine/Cosine with UVW feedback.

IMPORTANT When Motor Mounted Feedback is the Device Function, Sine/Cosine with UVW is the only valid feedback type for permanent magnet motors.

1. In the Controller Organizer, right-click an axis and choose Properties.
2. Select the Motor Feedback category.

   The Motor Feedback Device Specification dialog box appears.

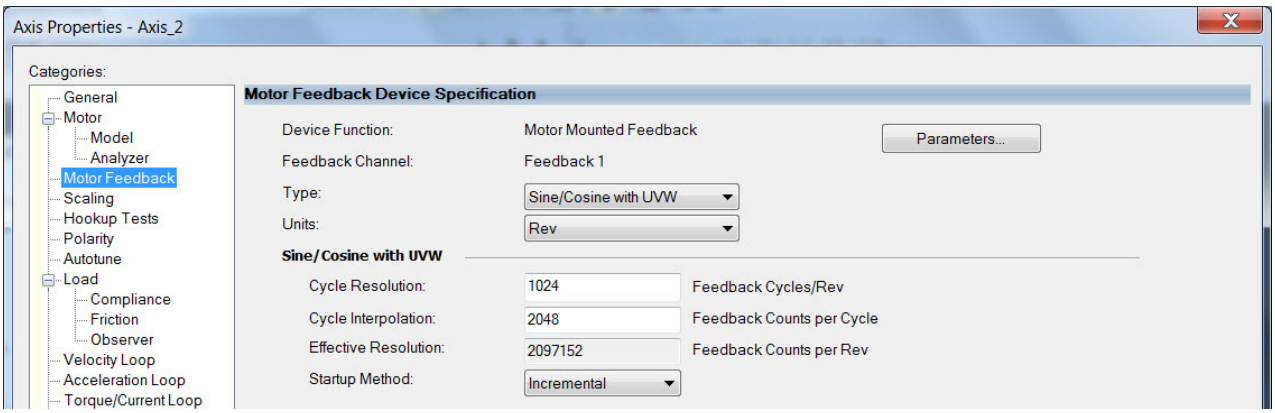

3. Configure the device function and type.

   In this example, Motor Feedback is the device function and Sine/Cosine with UVW is the feedback type.
4. Enter values for the Sine/Cosine with UVW specification fields.

   The only valid values for Cycle Interpolation are powers of 2 from 4 through 65536.
5. From the Startup Method pull-down menu, choose Incremental.
6. From the Alignment pull-down menu, choose Not Aligned.
7. Click OK.

Download the Program

After completing the Logix Designer application and saving the file you must download your program to the Logix 5000 processor.

Apply Power to the Kinetix 5700 Drive System

This procedure assumes that you have wired and configured your Kinetix 5700 system, your Logix 5000 controller, and iTRAK power supply if present.

SHOCK HAZARD: To avoid hazard of electrical shock, perform all mounting and wiring of the Bulletin 2198 servo drives prior to applying power. Once power is applied, connector terminals can have voltage present even when not in use.

IMPORTANT If multiple iTRAK power supplies are used on a track, they all need to power up within 4 seconds of each other (or at least downstream sections need to power up within 4 seconds of the bankmaster).

Follow these steps to apply power to the Kinetix 5700 system.

1. Disconnect the load to the motor (does not apply to iTRAK PS).

   ATTENTION: To avoid personal injury or damage to equipment, disconnect the load to the motor. Make sure each motor is free of all linkages when initially applying power to the system.

2. Apply 24V DC control power.

   The LCD display begins the startup sequence. Refer to Startup Sequence on page 193. If the startup sequence does not begin, check the 24V control power connections.

3. When the startup sequence completes, verify the following:

   a. DC-bus and iTRAK power supply NET status indicators are steady green.
   b. DC-bus and iTRAK power supply MOD status indicators are flashing.
   c. DC-bus power supply or regenerative bus supply axis-state is PRECHARGE.
   d. iTRAK power supply axis-state is PRECHARGE.

   If the DC-bus power supply/regenerative bus supply/iTRAK power supply does not reach the specified axis state and the two status indicators are not as specified, refer to Kinetix 5700 Status Indicators on page 276.

   IMPORTANT Apply control power before applying three-phase AC power. This makes sure the shunt is enabled, which can prevent nuisance faults or Bus Overvoltage faults.

4. Apply mains input power and monitor the DC BUS voltage on the LCD display.

   If the DC BUS does not reach the expected voltage level, check the three-phase input power connections.

TIP It can take as long as 1.8 seconds after input power is applied before the drive can accept motion commands (does not apply to iTRAK power supply).

a. Verify that all NET and MOD status indicators are steady green.
b. Verify that the DC-bus power supply axis-state is RUNNING.
c. Verify that the regenerative bus-supply axis-state is RUNNING or STOPPED depending on the Converter Startup Method used (see DC-bus Voltage Regulation on page 40).
d. Verify that the iTRAK power supply axis-state is RUNNING.

If the DC-bus power supply/regenerative bus supply/iTRAK power supply does not reach the specified axis state, refer to Fault Code Overview on page 274.

Understand Bus-sharing Group Configuration

When configuring Module Properties>Power category for each Kinetix 5700 drive, you can breakout drives from one or more servo systems into multiple bus-sharing (power) groups.

A drive that faults in Group 1 does not affect the operation of Group 2, even though all of the drives in Groups 1 and 2 are in the same Motion group in the Logix Designer application. As many as 25 bus-sharing groups are possible.

Figure 122 - Bus-sharing Group Configuration

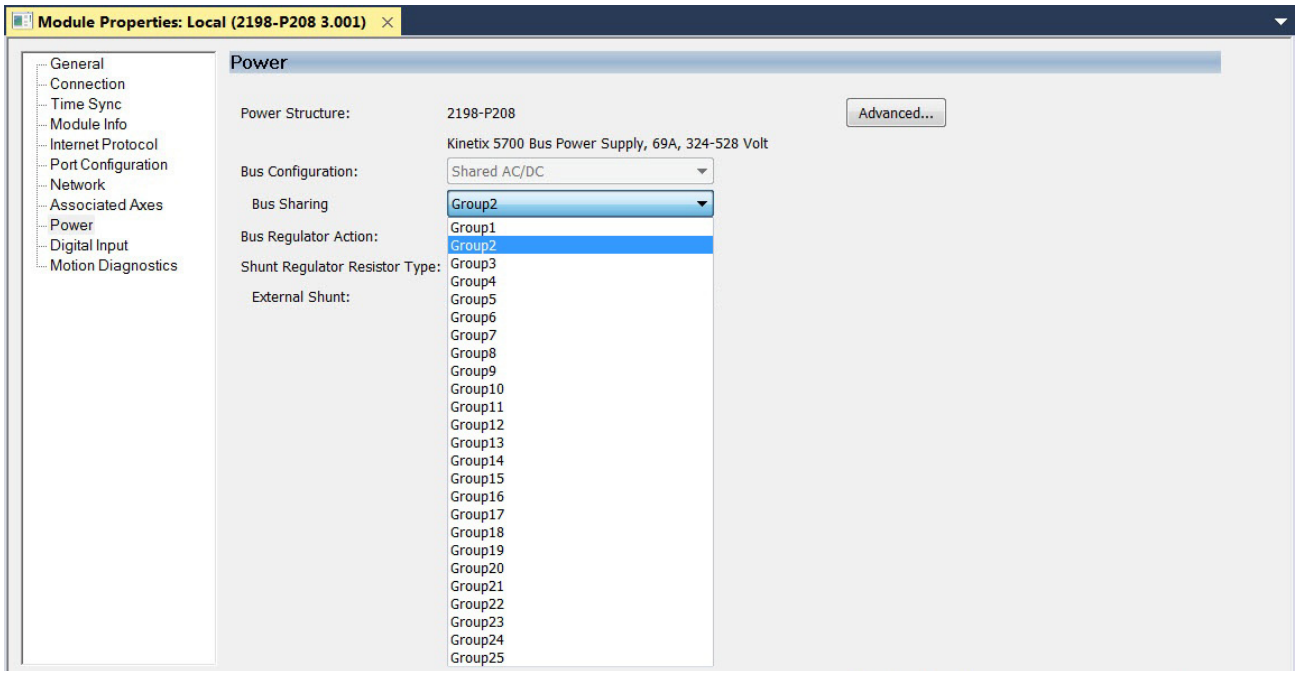

IMPORTANT When used with an iTRAK system consisting of L16 motor modules, the iTRAK power supply is not configured as part of a bus-sharing group in the Logix Designer application. The gateway computer monitors bus status and controls enabling and disabling the iTRAK power supply. See iTRAK System with TriMax Bearings User Manual, publication 2198T-UM002.

When used with the iTRAK 5730 system, both primary and secondary bus-sharing groups must be configured. See iTRAK 5730 System User Manual, publication 2198T-UM003, for more information.

Bus-sharing Group Example

In Figure 123, twelve axes are needed to support the motion application. All twelve axes are configured in the same Motion group in the Logix Designer application.

However, the twelve axes of motion are also configured as two bus-sharing groups in Module Properties>Power category. By creating two bus-sharing groups, a converter drive that faults in Group 1 only disables Group 1 drives, and has no effect on the drive operation of Group 2 drive.

ATTENTION: To avoid damage to equipment all modules physically connected to the same shared-bus connection system must be part of the same Bus Sharing Group in the Logix Designer application.

Figure 123 - Bus-sharing Group Example

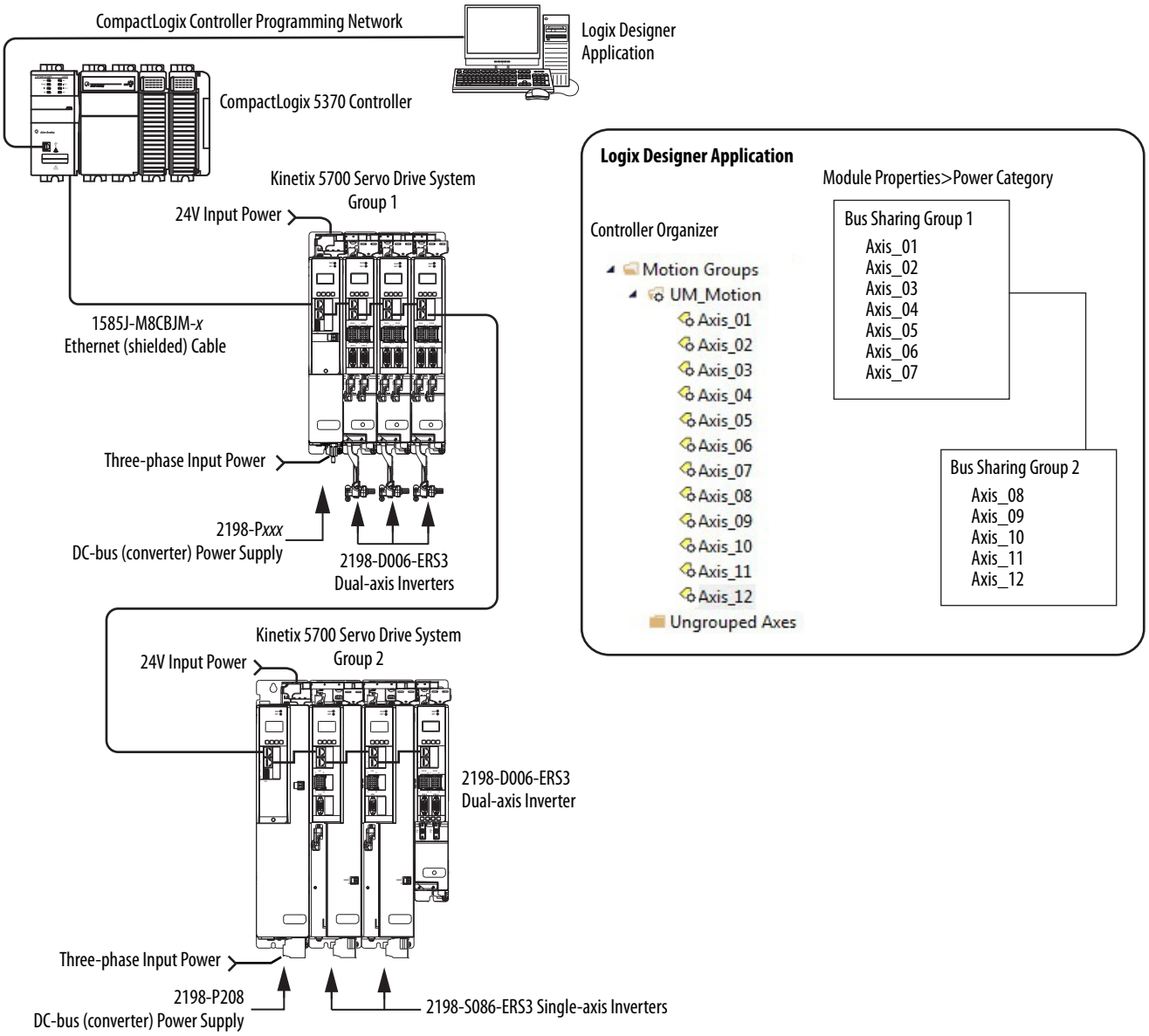

Configure Bus-sharing Groups

In both groups, the Bus Configuration for the converter drive is Shared AC/DC and the Bus Configuration for the inverter drives is Shared DC.

Figure 124 - Group 1 DC-bus Power Supply (converter) Configuration

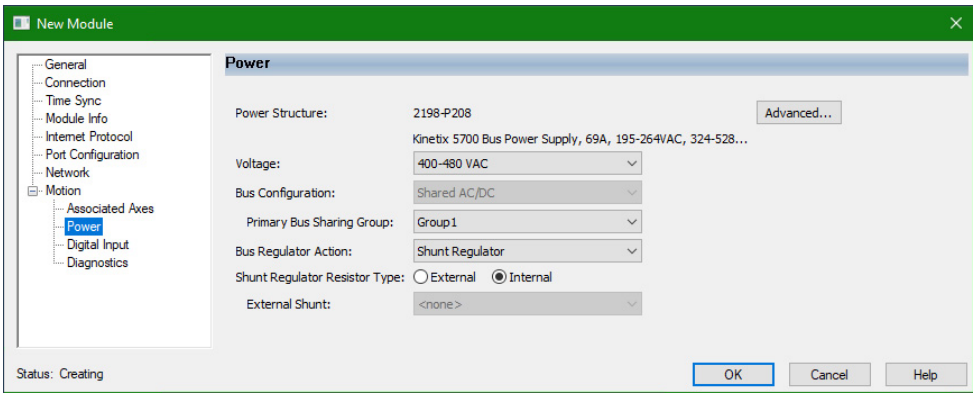

Figure 125 - Group 1 Dual-axis Inverter Configuration

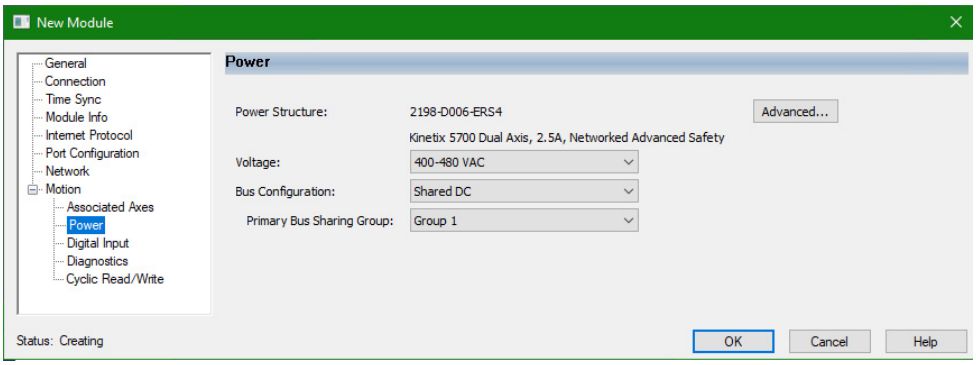

Figure 126 - Group 2 DC-bus Power Supply (converter) Configuration

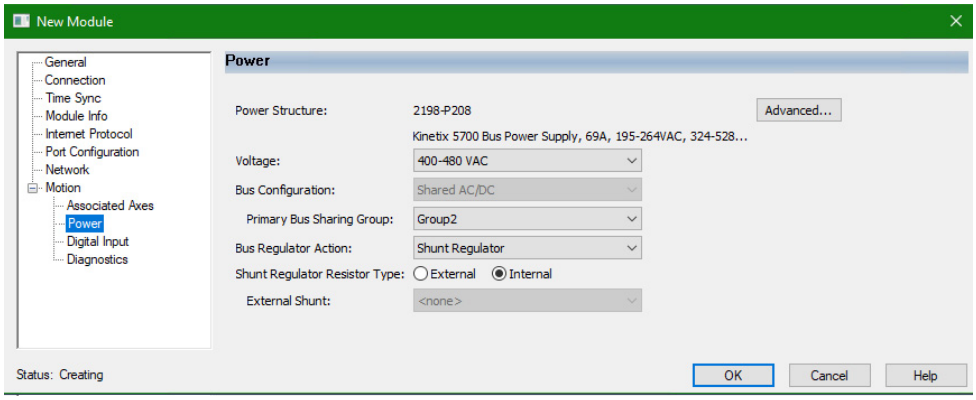

Figure 127 - Group 2 Single-axis Inverter Configuration

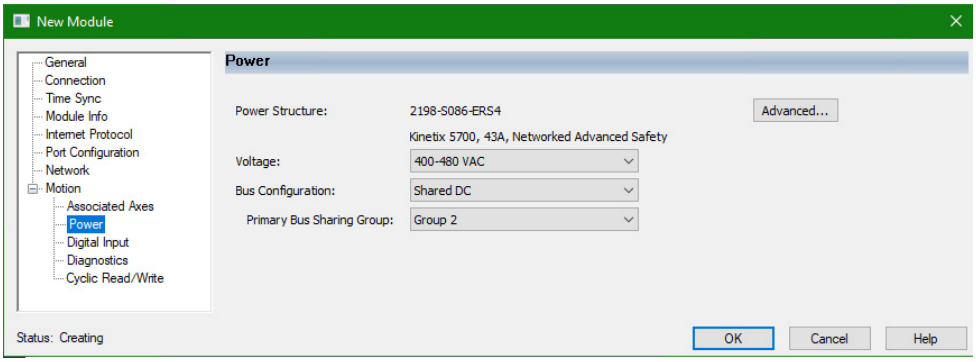

Figure 128 - Group 2 Dual-axis Inverter Configuration

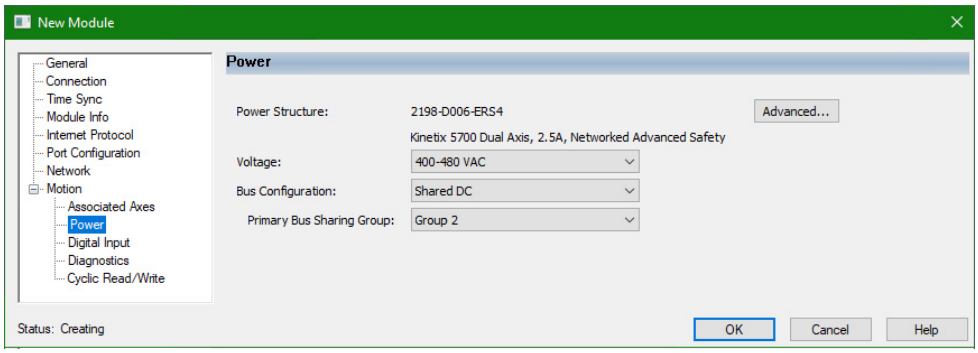

Test and Tune the Axes

This procedure assumes that you have configured your Kinetix 5700 drive, your Logix 5000 controller, and applied power to the system.

IMPORTANT Before proceeding with testing and tuning your axes, verify that the MOD and NET status indicators are operating as described in Kinetix 5700 Status Indicators on page 276.

For help using the Logix Designer application as it applies to testing and tuning your axes with ControlLogix EtherNet/IP modules or CompactLogix 5370 controllers, refer to Additional Resources on page 13.

Also, see Motor Nameplate Datasheet Entry for Custom Motor Applications, publication 2198-AT002, for detailed information on testing and tuning custom motors.

For testing and tuning iTRAK movers see iTRAK System with TriMax Bearings User Manual, publication 2198T-UM002, or iTRAK 5730 systems, see the iTRAK 5730 System User Manual, publication 2198T-UM003.

Test the Axes

Follow these steps to test the axes.

1. Verify the load was removed from each axis.

> **ATTENTION:** To avoid personal injury or damage to equipment, you must remove the load from each axis as uncontrolled motion can occur when an axis with an integral motor brake is released during the test.

2. In your Motion Group folder, right-click an axis and choose Properties.

   The Axis Properties dialog box appears.

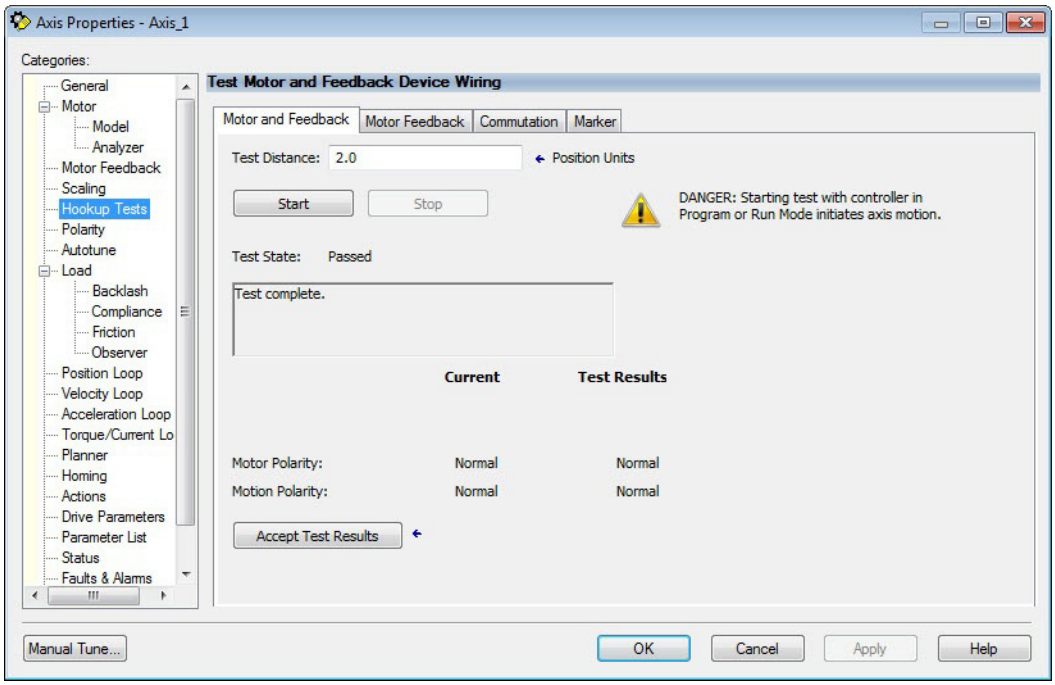

3. Select the Hookup Tests category.
4. In the Test Distance field, enter the desired test distance.

The Position Units are defined in Axis Properties>Scaling category.

Hookup Test	Definitions
Marker	Verifies marker detection capability as you manually rotate the motor shaft. The test completes when the drive either detects the marker or when the motor moves the distance specified in the Test Distance field. If the marker remains undetected and the test completes successfully, it means the motor moved the full test distance. If the marker remains undetected and the test fails, the motor did not move the full test distance. Run this test after running the Motor Feedback and Motor and Feedback tests.
Commutation	Verifies the commutation offset and commutation polarity of the motor. This test applies to third-party or custom permanent-magnet motors equipped with (TTL with Hall and Sine/Cosine with Hall) incremental encoders that are not available as a catalog number in the Motion Database. See Commutation Test on page page 460.
Motor Feedback	Verifies feedback connections are wired correctly as you manually rotate the motor shaft. The test completes when the drive determines that the motor moved the full distance specified in the Test Distance field. Run this test before the Motor and Feedback Test to verify that the feedback can be read properly.
Motor and Feedback	Verifies motor power and feedback connections are wired correctly as the drive commands the motor to rotate. Because the drive is rotating the motor, this test requires full bus power to run. Run the Motor Feedback test before running this test to verify that the feedback is being read correctly.

5. Click the desired test to verify connections.
6. Click Start.

   The Logix Designer - Motor and Feedback Test dialog box appears. The Test State is Executing. TESTING appears on the drive LCD display.

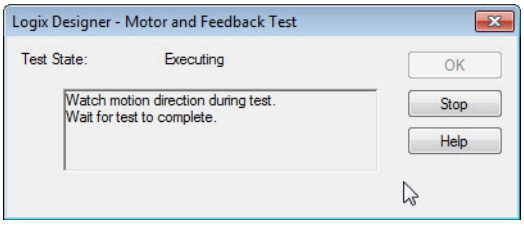

Drive LCD Display

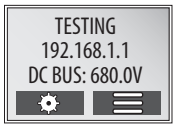

   When the test completes successfully, the Test State changes from Executing to Passed.

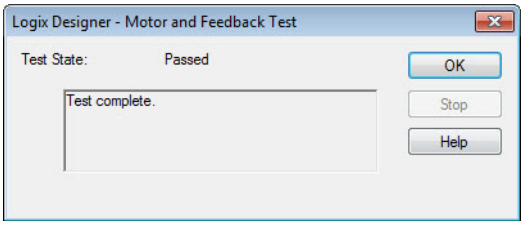

7. Click OK.

   This dialog box appears asking if the axis moved in the forward direction.

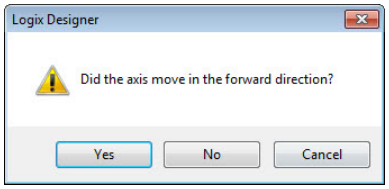

8. Click Yes if you agree.
9. Click Accept Test Results.

10. If the test fails, this dialog box appears.

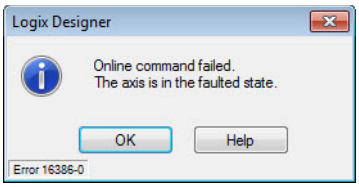

   a. Click OK.
   b. Verify the DC bus voltage.
   c. Verify unit values entered in the Scaling category.
   d. Verify the motor power and feedback wiring.
   e. Return to step 5 and run the test again.

Tune the Axes

With Studio 5000 Logix Designer application, version 33 and later, the load observer and adaptive tuning (tuningless) features are enabled by default for the following servo drives and drive firmware, so drive configuration is not required for tuningless operation.

Table 126 - For Applications with Tuningless Capability

Drive Cat. No.	Drive Firmware Revision	Logix Designer Version
2198-*xxxx*-ERS3 (series B)	13.001	33.00
2198-*xxxx*-ERS4		

For any other combination of servo drives, drive firmware, or Logix Designer version, see Tuningless Feature Configuration Quick Start, publication MOTION-QS001.

If additional tuning is required, see the Motion System Tuning Application Technique, publication MOTION-AT005, for more information.

Notes:

Troubleshoot the Kinetix 5700 Drive System

This chapter provides troubleshooting tables and related information for your Kinetix® 5700 drive system.

Topic	Page
Safety Precautions	273
Interpret Status Indicators	274
Axis Troubleshooting	278
Regenerative Bus Supply Troubleshooting	279
Logix 5000 Controller and Drive Module Behavior	281

Safety Precautions

Observe the following safety precautions when troubleshooting your Kinetix 5700 drive system.

ATTENTION: Capacitors on the DC bus can retain hazardous voltages after input power has been removed. Before working on the drive module, measure the DC bus voltage to verify it has reached a safe level or wait the full time interval as indicated in the warning on the front of the module. Failure to observe this precaution could result in severe bodily injury or loss of life.

ATTENTION: Do not attempt to defeat or override the module fault circuits. You must determine the cause of a fault and correct it before you attempt to operate the system. Failure to correct the fault could result in personal injury and/or damage to equipment as a result of uncontrolled machine operation.

ATTENTION: Provide an earth ground for test equipment (oscilloscope) used in troubleshooting. Failure to ground the test equipment could result in personal injury.

Interpret Status Indicators

Refer to these troubleshooting tables to identify faults, potential causes, and the appropriate actions to resolve the fault. If the fault persists after attempting to troubleshoot the system, please contact your Rockwell Automation sales representative for further assistance.

Display Interface

The LCD display provides fault messages and troubleshooting information by using the soft menu items and navigation buttons.

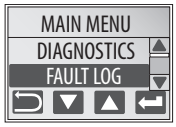

Under the Main Menu, select FAULT LOG by using the up/down arrows.

	Press to display the list of active fault codes.
	Press again to display the fault details (the problem in troubleshooting tables).
	Press to display the fault help (possible solutions in troubleshooting tables).

Refer to Understand the Kinetix 5700 Display on page 184 for more information on navigating the LCD display menu.

Fault Code Overview

The fault code tables are designed to help you determine the source of the fault or exception. When a fault condition is detected, the drive module performs the appropriate fault action, the fault is displayed, and the fault is added to a persistent fault log (along with diagnostics data). The earlier faults have priority to be displayed.

The drive module removes the fault text from the display when a Fault Reset service is sent from the controller and the fault is no longer active. If a fault condition is still active following a Fault Reset service, the fault is again posted to the display and written to the fault log.

However, there can be a delay before the fault is posted again. In a Studio 5000 Logix Designer® application, this delay results as the AxisFault tag on the drive axis being cleared until the fault is posted again. During this delay, the AxisState tag continues to indicate that the axis is faulted. Use the AxisState tag on the axis object only to determine if an axis is faulted.

Although software overtravel fault codes do not exist, software overtravel detection for the AXIS_CIP_DRIVE axis type is determined in the Logix 5000™ controller. For more information, see Integrated Motion on the EtherNet/IP™ Network Reference Manual, publication MOTION-RM003.

The DC-bus power supply, regenerative bus supply, single-axis inverters, and dual-axis inverters maintain a fault log of the last 128 faults. The fault log includes time stamps and is stored in persistent memory. However, the fault log cannot be cleared on the module.

Table 127 - Fault Code Summary

Fault Code Type (1) (2)	Description
FLT S*xx*	Standard runtime axis exceptions. The exception can apply to an individual axis or to all axes.
FLT M*xx*	Manufacturer-specific runtime axis exception. The exception can apply to an individual axis or to all axes.
INIT FLT S*xx*	Exceptions that prevent normal operation and occur during the initialization process.
INIT FLT M*xx*	
NODE FLT*xx*	Exceptions that can prevent normal operation of the drive module and apply to the entire module and affect all axes.
NODE ALARM *xx*	Exceptions that can prevent normal operation of the drive module, but do not result in any action other than reporting the alarm to the controller.
INHIBIT S*xx*	Conditions that prevent normal operation and indicate the drive module is prevented from being enabled.
INHIBIT M*xx*	
ALARM S*xx*	An underlying exception condition that does not result in any action other than reporting the alarm to the controller.
ALARM M*xx*	
SAFE FLT*xx* (3)	Exception generated by a fault condition detected in the safety function.

(1) S*xx* refers to Standard exceptions.
(2) M*xx* refers to Manufacturer-specific exceptions.
(3) For troubleshooting 2198-*xxxx*-ERS3 inverter SAFE FLT fault codes, refer to Troubleshoot the Safe Torque-off Function on page 314 (hardwired safety) or page 328 (integrated safety). For troubleshooting 2198-*xxxx*-ERS4 inverter SAFE FLT fault codes, refer to the Kinetix 5700 Safe Monitor Functions Safety Reference Manual, publication 2198-RM001.

TIP Fault codes triggered by conditions that fall outside factory set limits are identified by FL at the end of the display message. For example, FLT S07 – MTR OVERLOAD FL.

Fault codes triggered by conditions that fall outside user set limits are identified by UL at the end of the display message. For example, FLT S08 – MTR OVERLOAD UL.

Fault Codes

For Kinetix 5700 fault code descriptions and possible solutions, see the Knowledgebase Technote: Kinetix 5700 Servo Drives Fault Codes. You can download the spreadsheet from this public article.

You will be asked to log in to your Rockwell Automation web account or create an account if you do not have one. You do not need a support contract to access this article.

SAFE FLT Fault Codes

For troubleshooting 2198-*xxxx*-ERS4 inverter SAFE FLT fault codes, refer to the Kinetix 5700 Safe Monitor Functions Safety Reference Manual, publication 2198-RM001.

Kinetix 5700 Status Indicators

These status indicators apply to the Kinetix 5700 DC-bus power supply, the regenerative bus supply, the inverters, and the iTRAK® power supply. The module status and network status indicators are just above the LCD status display.

IMPORTANT Status indicators are not reliable for safety functions. Use them only for general diagnostics during commissioning or troubleshooting. Do not attempt to use status indicators to determine operational status.

Kinetix 5700 Modules

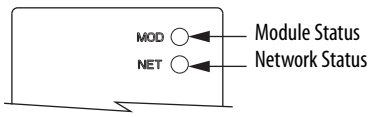

Table 128 - Module Status Indicator

Condition	Status
Steady Off	No power applied to the drive.
Steady Green	Drive is operational. No faults or failures.
Flashing Green	Standby (drive not configured) and Precharge (drive is configured).
Flashing Red	Major recoverable fault. The drive detected a recoverable fault, for example, an incorrect or inconsistent configuration.
Steady Red	Major fault. The drive detected a non-recoverable fault.
Flashing Green/Red	Self-test. The drive performs self-test during powerup. Once self-test is complete, Flashing Green/Red condition continues if drive is waiting for: • Safety configuration when in Integrated STO mode • Safety inputs when in Hardwired STO mode

Table 129 - Network Status Indicator

Condition	Status
Steady Off	No power applied to the drive or IP address is not configured.
Flashing Green	No Motion or Safety connection is established, but drive has obtained an IP address.
Steady Green	Motion or Safety connection is established and no timeout has occurred. Normal operation.
Flashing Red	Connection timeout. One or more of the connections, for which this drive is the target, has timed out.
Steady Red	Duplicate IP address. IP address specified is already in use.
Flashing Green/Red	Self-test. The drive performs self-test during powerup. Once self-test is complete, Flashing Green/Red condition continues if drive is processing a safety device ID proposal.

Ethernet RJ45 Connectors

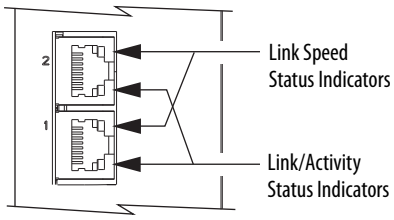

Table 130 - Ethernet Link Speed Status Indicator

Condition	Status
Steady Off	10 Mbit
Steady On	100 Mbit

Table 131 - Ethernet Link/Activity Status Indicator

Condition	Status
Steady Off	No link
Steady On	Link established
Blinking	Network activity

Kinetix 5700 Accessory Module Status Indicators

The Kinetix 5700 accessory modules include the 2198-CAPMOD-2240 capacitor module and 2198-DCBUSCOND-RP312 DC-bus conditioner module.

Capacitor Module

Status indicators and the module status (MS) connector are on the front of the module. The module status connector is an output suitable for wiring to a DC-bus power supply, regenerative bus supply, or inverter digital input assigned as Bus Capacitor OK, or the Logix 5000 controller.

Kinetix 5700 Accessory Modules

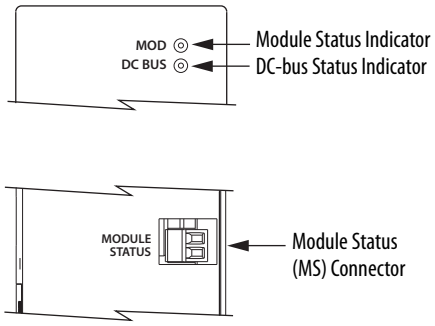

Table 132 - Capacitor Module Status Indicators and Relay Output

Status Indicators	Status	Relay (1) Output	Description	Resolution
Module status	Steady off	Open	24V DC is not present.	–
	Steady green	Closed	24V DC is present and internal fuse is closed.	–
	Steady red	Open	24V DC is present and internal fuse is open.	• Cycle control and bus power • Verify that AC input meets specifications • Replace the module if fault persists
DC-bus status	Steady off	Open	24V DC is not present or DC-bus measures < 50V DC.	–
	Steady green	Closed	24V DC is present and DC-bus measures > 50V DC.	–

(1) Wiring the module status relay output is optional.

DC-bus Conditioner Module

Status indicators and the module status (MS) connector are on the front of the module. The module status connector is an output suitable for wiring to a DC-bus power supply, regenerative bus supply, or inverter digital input assigned as Bus Conditioner OK, or the Logix 5000 controller.

Table 133 - DC-bus Conditioner Module Status Indicators and Relay Output

Status Indicators	Status	Relay Output	Description
Module status	Steady off	Open	24V DC is not present
	Steady green	Closed	24V DC is present and internal fuse is closed
	Steady red (1)	Open	• 24V DC is present and internal fuse is open • Over temperature event occurred
DC-bus status	Steady off	–	24V DC is not present or DC-bus measures < 50V DC
	Steady green	–	24V DC is present and DC-bus measures > 50V DC

(1) Remove DC-bus power and cycle control power. If the fault persists, the internal fuse is blown and the module needs to be replaced. If the fault clears, then there was a thermal fault caused by a system issue. If the fault persists and the rest of the system is functioning properly, add more DC-bus conditioners to the system to reduce thermal stress on the module.

Axis Troubleshooting

These conditions do not always result in a fault code, but can require troubleshooting to improve servo drive performance. For general iTRAK troubleshooting, see iTRAK System with TriMax Bearings User Manual, publication 2198T-UM002, or iTRAK 5730 System User Manual, publication 2198T-UM003.

Table 134 - Axis Troubleshooting

Condition	Potential Cause	Possible Resolution
Axis or system is unstable.	The position feedback device is incorrect or open.	Check wiring.
	Unintentionally in Torque mode.	Check to see what primary operation mode was programmed.
	Motor tuning limits are set too high.	Run Tune in the Logix Designer application.
	Position loop gain or position controller accel/decel rate is improperly set.	Run Tune in the Logix Designer application.
	Improper grounding or shielding techniques are causing noise to be transmitted into the position feedback or velocity command lines, causing erratic axis movement.	Check wiring and ground.
	Motor Select limit is incorrectly set (servo motor is not matched to axis module).	• Check setups. • Run Tune in the Logix Designer application.
	Mechanical resonance.	• Notch filter or output filter can be required (refer to Axis Properties dialog box, Compliance tab in the Logix Designer application). • Enable adaptive tuning. See Adaptive Tuning on page 460 for more notch filter information.
You cannot obtain the motor acceleration/deceleration that you want.	Torque Limit limits are set too low.	Verify that torque limits are set properly.
	Incorrect motor selected in configuration.	Select the correct motor and run Tune in the Logix Designer application again.
	The system inertia is excessive.	• Check motor size versus application need. • Review servo system sizing.
	The system friction torque is excessive.	Check motor size versus application need.
	Available current is insufficient to supply the correct accel/decel rate.	• Check motor size versus application need. • Review servo system sizing.
	Acceleration limit is incorrect.	Verify limit settings and correct them, as necessary.
	Velocity Limit limits are incorrect.	Verify limit settings and correct them, as necessary.
	The motor is operating in the field-weakening range of operation.	Reduce the commanded acceleration or deceleration.
Motor does not respond to a command.	The axis cannot be enabled until stopping time has expired.	Disable the axis, wait the configured stopping time, and enable the axis.
	The motor wiring is open.	Check the wiring.
	The motor cable shield connection is improper.	• Check feedback connections. • Check cable shield connections.
	The motor has malfunctioned.	Repair or replace the motor.
	The coupling between motor and machine has broken (for example, the motor moves, but the load/machine does not).	Check and correct the mechanics.
	Primary operation mode is set incorrectly.	Check to see what primary operation mode was programmed.
	Velocity or torque limits are set incorrectly.	Check and properly set the limits.
	Brake connector not wired	Check brake wiring
Presence of noise on command or motor feedback signal wires.	Recommended grounding per installation instructions have not been followed.	• Verify grounding. • Route wire away from noise sources. • Refer to System Design for Control of Electrical Noise, publication GMC-RM001.
	Line frequency can be present.	• Verify grounding. • Route wire away from noise sources.
	Variable frequency can be velocity feedback ripple or a disturbance caused by gear teeth or ballscrew, and so forth. The frequency can be a multiple of the motor power transmission components or ballscrew speeds resulting in velocity disturbance.	• Decouple the motor for verification. • Check and improve mechanical performance, for example, the gearbox or ballscrew mechanism.

Table 134 - Axis Troubleshooting (continued)

Condition	Potential Cause	Possible Resolution
No rotation	The motor connections are loose or open.	Check motor wiring and connections.
	Foreign matter is lodged in the motor.	Remove foreign matter.
	The motor load is excessive.	Verify the servo system sizing.
	The bearings are worn.	Return the motor for repair.
	The motor brake is engaged (if supplied).	• Check brake wiring and function. • Return the motor for repair.
	The motor is not connect to the load.	Check coupling.
Motor overheating	The duty cycle is excessive.	Change the command profile to reduce accel/decel or increase time.
	The rotor is partially demagnetized causing excessive motor current.	Return the motor for repair.
Abnormal noise	Motor tuning limits are set too high.	Run Tune in the Logix Designer application.
	Loose parts are present in the motor.	• Remove the loose parts. • Return motor for repair. • Replace motor.
	Through bolts or coupling is loose.	Tighten bolts.
	The bearings are worn.	Return motor for repair.
	Mechanical resonance.	Notch filter can be required (refer to Axis Properties dialog box, Compliance tab in the Logix Designer application).
Erratic operation - Motor locks into position, runs without control or with reduced torque.	Motor power phases U and V, U and W, or V and W reversed.	Check and correct motor power wiring.

Regenerative Bus Supply Troubleshooting

These conditions do not always result in a fault code, but can require troubleshooting to improve regenerative bus supply performance.

Table 135 - Regenerative Bus Supply Troubleshooting

Condition	Potential Cause	Possible Resolution
AC current appears distorted, non-sinusoidal on oscilloscope.	AC voltage distortion.	Improve AC voltage waveform with isolation transformer or line reactor on input power. Distortion from the utility cannot be addressed.
	Excessive boost voltage.	Reduce the BusVoltageSetPoint or set to automatic mode. See DC-bus Voltage Regulation on page 40. for definition of boost voltage.
	Current Saturation.	Normal operation, distortion improves closer to rated current.
	Ride through condition.	Normal operation, distortion clears once input voltage disturbance ends.
	Load current (<50%).	Normal operation, distortion improves closer to rated current.
	Excessive bus stiffness.	Detune the voltage and observer bandwidths.
Audible (loud) noise from regenerative bus supply.	Excessive boost voltage.	Reduce the bus voltage set point or set to automatic mode.
	Notching on AC line voltage.	Add isolation transformer or line reactor to isolate from notching source.
	Current overload.	Normal peak operation, no resolution needed.
	Cooling fans enabled when AC input power is applied.	Normal operation.
DC-bus voltage fluctuations.	Loop response.	If changed, set loop response to medium (default).
	Dynamic load change.	DC-bus voltage transient is normal with a peak-load step change, but adding a capacitor module can help reduce voltage transients and adding an external active shunt module can help prevent nuisance over-voltage faults.
	Voltage loop or observer bandwidths.	Optimal voltage loop bandwidth setting is 1/10 of the current loop bandwidth or lower. Optimal observer bandwidth is >2x the voltage loop bandwidth.
	Normal voltage ripple of 1…2% or approximately 7…15V.	Normal operation.
	External bus capacitance not entered correctly.	Enter the sum of all bus capacitance external to the regenerative bus supply into the Logix Designer application. See Calculate System and External-bus Capacitance on page 398 to calculate external bus capacitance.

Table 135 - Regenerative Bus Supply Troubleshooting (continued)

Condition	Potential Cause	Possible Resolution
Bus overvoltage on other converters sharing AC input with the regenerative bus supply as soon as DC-bus regulation is enabled.	Common mode current from regenerative bus supply interacting with common-mode filter capacitors in non-Kinetix 5700 drives.	Remove AC line filter or ground jumper from other non-Kinetix 5700 drives sharing the AC input with the regenerative bus supply. Additionally, properly sized input reactors can help reduce DC-bus pump-up on non-Kinetix 5700 drives.
Input overcurrent or ground current fault on non-Kinetix 5700 drives connected to the regenerative bus supply as soon as DC-bus regulation is enabled.	Single-axis inverters (catalog numbers 2198-S086-ERS*x*, 2198-S130-ERS*x*, 2198-S160-ERS*x*) firmware 10.3 or later is required.	Update the single-axis inverter firmware (catalog numbers 2198-S086-ERS*x*, 2198-S130-ERS*x*, 2198-S160-ERS*x*).
	Motor insulation breakdown.	Replace the motor.
DC bus voltage remains low (<50V) after the AC contactor closes and AC is present at the input to the regenerative bus supply.	DC-bus short circuit.	Find and resolve the DC-bus short circuit.
	Inverter internal short circuit.	• Test regenerative bus supply with all inverters disconnected • Replace the shorted inverter
	Inverter ground jumpers installed.	Remove inverter ground jumpers.
Actual DC bus voltage is not equal to the DC voltage set point in the Logix Designer application.	DC voltage set point too high.	Set the DC-bus voltage set point to a value <747V or use automatic mode.
	DC voltage set point too low.	Set the DC-bus voltage to a value > (input AC voltage rms • 1.414 • 1.05) or use automatic mode.
Startup draws excessive current from the AC input on DC-bus voltage regulation enable.	External bus capacitance entered incorrectly in the Logix Designer application.	Enter the sum of all bus capacitance external to the regenerative bus supply into the Logix Designer application. See Calculate System and External-bus Capacitance on page 398 to calculate external bus capacitance.
	Voltage rate limit set too high in the Logix Designer application.	Reduce the bus voltage rate limit in the Logix Designer application.
Current oscillations at no load.	Loop Response	Set the loop response to medium or low.
	Filter Bandwidth	Increase the filter bandwidth (if lower than 4x the voltage regulator bandwidth).
	Notch Frequency.	Increase the notch frequency bandwidth (if lower than 4x the voltage regulator bandwidth).
	Source kVA.	Set the source kVA to the actual kVA rating of the AC input transformer or input reactor.
AC current is limited to less than the peak rating of the regenerative bus supply.	Source kVA set too low.	
	Current loop vector limit set too low.	Set the current loop vector limit back to the default.
AC contactor won't close.	Stuck in configuring.	Check for messages on quick view pane of the controller organizer in the Logix Designer application.
	Contactor enable unplugged.	Plug in the contactor enable.
	AC contactor coil failure.	Replace contactor.

Logix 5000 Controller and Drive Module Behavior

By using the Logix Designer application, you can configure how the Kinetix 5700 system responds when a module fault/exception occurs.

TIP The INIT FLT *xxx* faults are always generated after powerup, but before the drive is enabled, so the stopping behavior does not apply.

NODE ALARM *xxx* faults do not apply because they do not trigger stopping behavior.

For troubleshooting SAFE FLT fault codes, refer to Chapter 9 on page 312 (hardwired safety) or page 322 (integrated safety).

The iTRAK power supply cannot be configured by using the Studio 5000 Logix Designer application, but the pre-configured faults are shown on page 286.

The DC-bus power supplies and servo drives support fault actions for Ignore, Alarm, Minor Fault, and Major Fault as defined in Table 136. The drives also support five configurable stopping actions as defined in Table 147.

Table 136 - Kinetix 5700 Module Exception Action Definitions

Exception Action	Definition
Ignore	The drive module completely ignores the exception condition. For some exceptions that are fundamental to the operation of the planner, Ignore is not an available option.
Alarm	The drive module sets the associated bit in the Motion Alarm Status word, but does not otherwise affect axis behavior. Like Ignore, if the exception is so fundamental to the drive, Alarm is not an available option. When an exception action is set to Alarm, the Alarm goes away by itself when the exceptional condition has cleared.
Minor Fault	The drive module latches the exception condition, but the drive does not execute any exception action.
Major Fault	The drive module latches the exception condition and executes the configured exception action.

You can configure exception behavior in the Logix Designer application from the Axis Properties dialog box, Actions category. These controller exception actions are mapped to the drive exception actions.

Table 137 - Logix Designer Exception Action Definitions

Exception Action	Definition
Ignore	The controller completely ignores the exception condition. For some exceptions that are fundamental to the operation of the planner, Ignore is not an available option.
Alarm	The controller sets the associated bit in the Motion Alarm Status word, but does not otherwise affect axis behavior. Like Ignore, if the exception is so fundamental to the drive, Alarm is not an available option. When an exception action is set to Alarm, the Alarm goes away by itself when the exceptional condition has cleared.
Fault Status Only	Like Alarm, Fault Status Only instructs the controller to set the associated bit in the Motion Fault Status word, but does not otherwise affect axis behavior. However, unlike Alarm an explicit Fault Reset is required to clear the fault once the exceptional condition has cleared. Like Ignore and Alarm, if the exception is so fundamental to the drive, Fault Status Only is not an available option.
Stop Planner	The controller sets the associated bit in the Motion Fault Status word and instructs the Motion Planner to perform a controlled stop of all planned motion at the configured maximum deceleration rate. An explicit Fault Reset is required to clear the fault once the exceptional condition has cleared. If the exception is so fundamental to the drive, Stop Planner is not an available option.
StopDrive (v31 and earlier) Disable (v32 and later)	When the exception occurs, the associated bit in the Fault Status word is set and the axis comes to a stop by using the stopping action defined by the drive for the particular exception that occurred. In the event of a fault, there is no controller-based configuration to specify what the stopping action is. The stopping action is device dependent.
Shutdown	When the exception occurs, the drive brings the motor to a stop by using the stopping action defined by the drive (as in Stop Drive) and the power module is disabled. An explicit Shutdown Reset is required to restore the drive to operation.

DC-bus Power Supply Behavior

Stopping action for exception fault codes does not apply to the DC-bus power supply. The Disable exception action for a DC-bus power supply means the power supply enters into a Major Fault state that opens the contactor-enable output, removing three-phase power from the Kinetix 5700 drive system. The Shutdown exception action exhibits the same behavior as Disable, except the power supply enters into Shutdown as the final state and requires a Shutdown Reset to recover.

Fault actions are shown in Table 138 and Table 139.

TIP In the Logix Designer application, version 32 and later, Disable replaced StopDrive as the default Action.

Figure 129 - Logix Designer Axis Properties - Exceptions Category

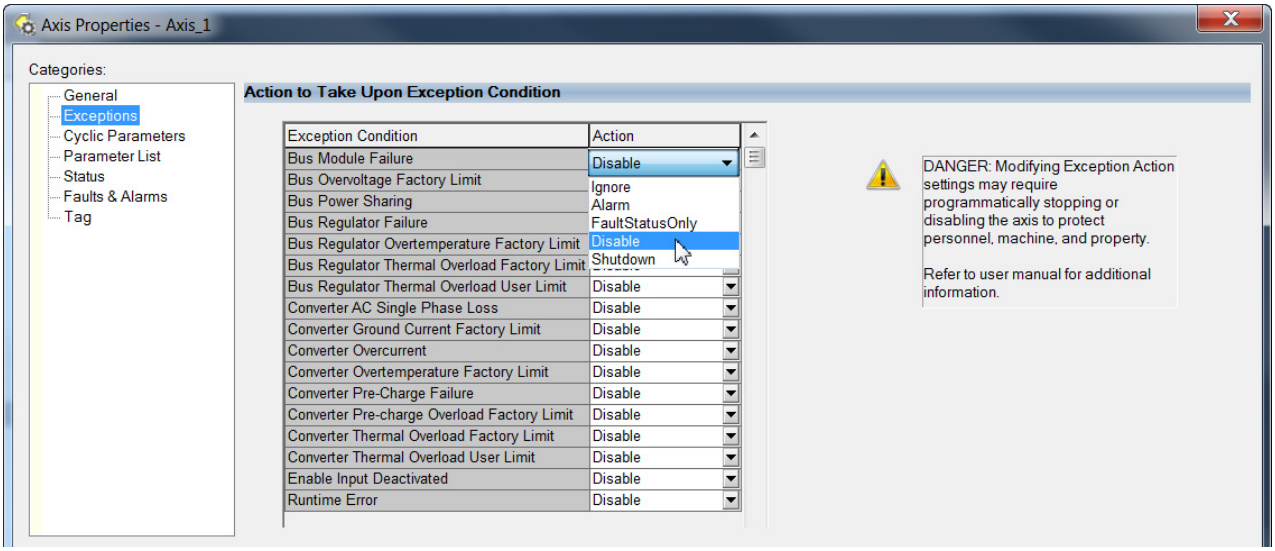

Table 138 - DC-bus Power Supply Behavior, FLT S*xx* Fault Codes

Exception Fault Code	Exception Text	Fault Action				Best Available Stopping Action (applies to major faults)
		Ignore	Alarm	Minor Fault	Major Fault	
FLT S15 – CONV OVERCURRENT	Converter Overcurrent Fault	–	–	–	X	DC-bus power supply does not perform stopping actions.
FLT S16 – GROUND CURRENT	Ground Current Factory Limit Fault	–	–	–	X	
FLT S18 – CONV OVERTEMP FL	Converter OverTemp Factory Limit Fault	–	–	–	X	
FLT S20 – CONV OVERLOAD FL	Converter Thermal OverLoad Factory Limit Fault	–	–	–	X	
FLT S21 – CONV OVERLOAD UL	Converter Thermal Overload User Limit Fault	X	X	X	X	
FLT S23 – AC PHASE LOSS	AC Single Phase Loss Fault	–	–	–	X	
FLT S25 – PRECHARGE FAILURE	Precharge Failure Fault	–	–	–	X	
FLT S27 – BUS REG OVERTEMP FL (1)	Bus Regulator Overtemperature Factory Limit Fault	–	–	–	X	
FLT S29 – BUS REG OVERLOAD FL	Bus Regulator Thermal OverLoad Factory Limit Fault	–	–	–	X	

Table 138 - DC-bus Power Supply Behavior, FLT S*xx* Fault Codes (continued)

Exception Fault Code	Exception Text	Fault Action				Best Available Stopping Action (applies to major faults)
		Ignore	Alarm	Minor Fault	Major Fault	
FLT S30 – BUS REG OVERLOAD UL	Bus Regulator Thermal Overload User Limit Fault	X	X	X	X	DC-bus power supply does not perform stopping actions.
FLT S31 – BUS REG FAILURE	Bus Regulator Failure	–	–	–	X	
FLT S32 – BUS CAPACITOR MODULE FAILURE	Bus Capacitor Module Failure	X	X	X	X	
FLT S35 – BUS OVERVOLT FL	Bus Overvoltage Factory Limit Fault	–	–	–	X	
FLT S40 – BUS POWER SHARING FAULT	Bus Power Sharing Fault	–	–	–	X	
FLT S61 – ENABLE INPUT	Enable Input Deactivated	–	–	–	X	

(1) Supported when shunt thermal switch is connected to the power supply digital input and configured in the Logix Designer application.

Table 139 - DC-bus Power Supply Behavior, FLT M*xx* Fault Codes

Exception Fault Code	Exception Text	Fault Action				Best Available Stopping Action (applies to major faults)
		Ignore	Alarm	Minor Fault	Major Fault	
FLT M12 – POWER CYCLE FL (1)	Converter Precharge Overload Factory Limit Fault	–	–	–	X	DC-bus power supply does not perform stopping actions.
FLT M26 – RUNTIME ERROR	Runtime Error	–	–	–	X	

(1) Single-axis and dual-axis drives assert Bus Power Sharing Exception.

Table 140 - DC-bus Power Supply Behavior, NODE FLT Fault Codes

Exception Fault Code	Exception Text	Fault Action				Best Available Stopping Action (applies to major faults)
		Ignore	Alarm	Minor Fault	Major Fault	
NODE FLT 01 – LATE CTRL UPDATE	Control Connection Update Fault	–	–	–	X	DC-bus power supply does not perform stopping actions.
NODE FLT 02 – PROC WATCHDOG	Processor Watchdog Fault	–	–	–	X	
NODE FLT 03 – HARDWARE	Hardware Fault	–	–	–	X	
NODE FLT 05 – CLOCK SKEW FLT	Clock Skew Fault	–	–	–	X	
NODE FLT 06 – LOST CTRL CONN	Lost Controller Connection Fault	–	–	–	X	
NODE FLT 07 – CLOCK SYNC	Clock Sync Fault	–	–	–	X	
NODE FLT 09 – DUPLICATE IP ADDRESS	Duplicate IP Address Fault	–	–	–	X	

Regenerative Bus Supply Behavior

Stopping action for exception fault codes does not apply to the regenerative bus supply. The Disable exception action for a regenerative bus supply means the power supply enters into a Major Fault state that opens the contactor-enable output, removing three-phase power from the Kinetix 5700 drive system. The Shutdown exception action exhibits the same behavior as Disable, except the power supply enters into Shutdown as the final state and requires a Shutdown Reset to recover.

Fault actions are shown in Table 141 and Table 142.

Figure 130 - Logix Designer Axis Properties - Exceptions Category

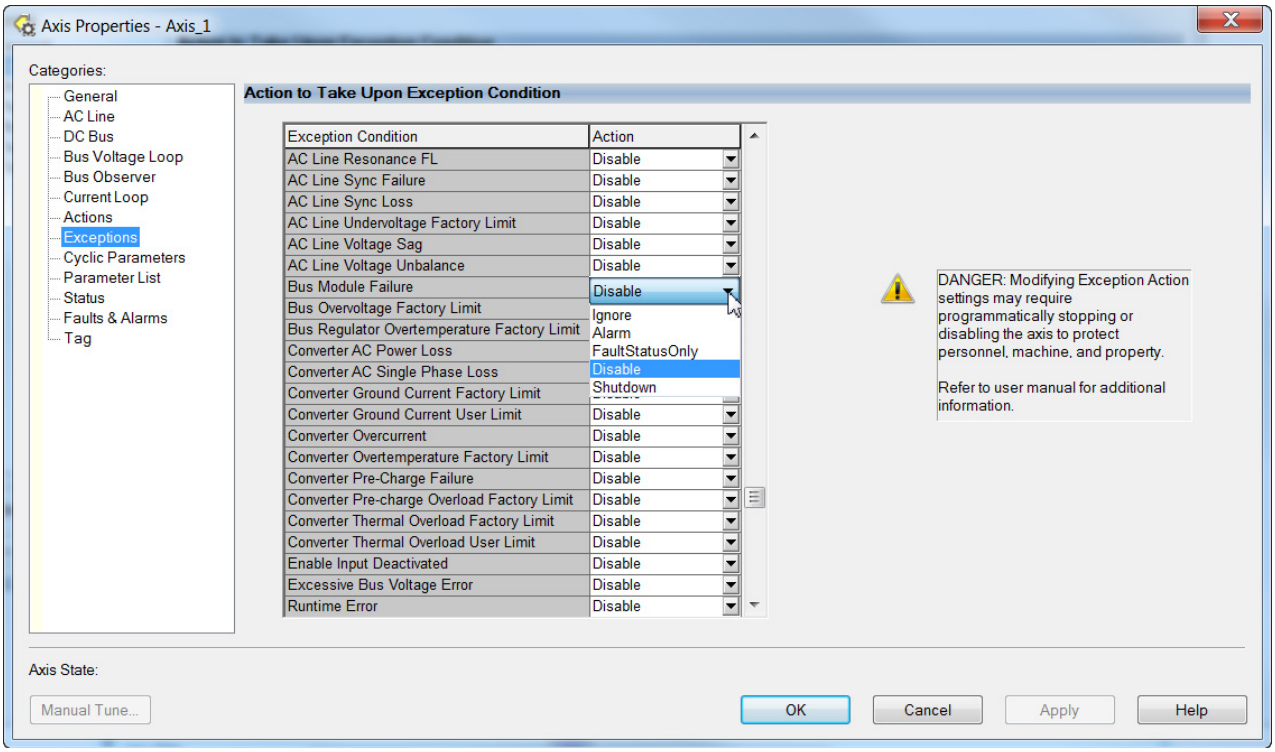

Table 141 - Regenerative Bus Supply Behavior, FLT S*xx* Fault Codes

Exception Fault Code	Exception Text	Fault Action				Best Available Stopping Action (applies to major faults)
		Ignore	Alarm	Minor Fault	Major Fault	
FLT S15 – CONV OVERCURRENT	Converter Overcurrent Fault	–	–	–	X	Regenerative bus supply does not perform stopping actions.
FLT S16 – GROUND CURRENT	Ground Current Factory Limit Fault	–	–	–	X	
FLT S17 – GROUND CURRENT UL (1)	Ground Current User Limit Fault	X	X	X	X	
FLT S18 – CONV OVERTEMP FL	Converter OverTemp Factory Limit Fault	–	–	–	X	
FLT S20 – CONV OVERLOAD FL	Converter Thermal OverLoad Factory Limit Fault	–	–	–	X	
FLT S21 – CONV OVERLOAD UL	Converter Thermal Overload User Limit Fault	X	X	X	X	
FLT S22 – AC POWER LOSS	Converter AC Power Loss Fault	X	X	X	X	

Table 141 - Regenerative Bus Supply Behavior, FLT S*xx* Fault Codes (continued)

Exception Fault Code	Exception Text	Fault Action				Best Available Stopping Action (applies to major faults)
		Ignore	Alarm	Minor Fault	Major Fault	
FLT S23 – AC PHASE LOSS	AC Single Phase Loss Fault	–	–	–	X	Regenerative bus supply does not perform stopping actions.
FLT S25 – PRECHARGE FAILURE	Precharge Failure Fault	–	–	–	X	
FLT S27 – BUS REG OVERTEMP FL (1)	Bus Regulator Overtemperature Factory Limit Fault	–	–	–	X	
FLT S32 – BUS MODULE FAILURE	Bus Module Failure	X	X	X	X	
FLT S35 – BUS OVERVOLT FL	Bus Overvoltage Factory Limit Fault	–	–	–	X	
FLT S58 – EXCESSIVE BUS VOLTAGE ERROR	Excessive Bus Voltage Error	–	–	–	X	
FLT S61 – ENABLE INPUT	Enable Input Deactivated	–	–	–	X	
FLT S64 – AC LINE OVERVOLTAGE FL	AC Line Overvoltage FL	–	–	–	X	
FLT S66 – AC LINE UNDER VOLTAGE FL (2)	AC Line Undervoltage FL	–	–	–	X	
FLT S68 – AC LINE HIGH FREQUENCY FL	AC Line High Frequency FL	–	–	–	X	
FLT S70 – AC LINE LOW FREQUENCY FL	AC Line Low Frequency FL	–	–	–	X	
FLT S72 – AC LINE VOLTAGE UNBALANCE	AC Line Voltage Unbalance	–	–	–	X	
FLT S73 – AC LINE CURRENT UNBALANCE	AC Line Current Unbalance	–	–	–	X	
FLT S74 – AC LINE VOLTAGE SAG (2)	AC Line Voltage Sag	–	–	–	X	
FLT S75 – AC LINE FREQUENCY CHANGE	AC Line Frequency Change	–	–	–	X	
FLT S76 – AC LINE SYNCHRONIZATION LOSS (2)	AC Line Synchronization Loss	–	–	–	X	
FLT S76 – AC LINE SYNCHRONIZATION FAILURE	AC Line Synchronization Failure	–	–	–	X	

(1) Supported when shunt thermal switch is connected to the power supply digital input and configured in the Logix Designer application.
(2) A single or three-phase open circuit can result in a number of different faults depending on the converter loading.

Table 142 - Regenerative Bus Supply Behavior, FLT M*xx* Fault Codes

Exception Fault Code	Exception Text	Fault Action				Best Available Stopping Action (applies to major faults)
		Ignore	Alarm	Minor Fault	Major Fault	
FLT M12 – POWER CYCLE FL (1)	Converter Precharge Overload Factory Limit Fault	–	–	–	X	Regenerative bus supply does not perform stopping actions.
FLT M26 – RUNTIME ERROR	Runtime Error	–	–	–	X	
FLT M29 – AC LINE CONTACTOR	AC Line Contactor	–	–	–	X	
FLT M30 – AC LINE RESONANCE FL	AC Line Resonance FL	–	–	–	X	

(1) Single-axis and dual-axis inverters assert Bus Power Sharing Exception.

iTRAK Power Supply Behavior

The iTRAK power supply exceptions behavior, as defined in Table 143, is shown in the following tables.

Table 143 - iTRAK Power Supply Exception Action Definitions

Exception Action	Definition
Hold	Continue regulating the iTRAK DC buses.
Disable	Actively discharge the iTRAK DC buses then disable the regulators.
Shutdown	Disable the regulators, iTRAK DC buses passively discharge.

Table 144 - iTRAK Power Supply Behavior, FLT S*xx* Fault Codes

Exception Fault Code	Exception Text	Fault Action				Stopping Action
		Ignore	Alarm	Minor Fault	Major Fault	
FLT S10 – INV OVERCURRENT	Inverter Overcurrent Fault	–	–	–	X	Shutdown
FLT S15 – CONV OVERCURRENT (1)	Converter Overcurrent Fault	–	–	–	X	Shutdown
FLT S16 - GROUND CURRENT FL	Ground Current Factory Limit Fault	–	–	–	X	Shutdown
FLT S18 - CONV OVERTEMP FL	Converter OverTemp Factory Limit Fault	–	–	–	X	Shutdown
FLT S20 - CONV OVERLOAD FL	Converter Thermal Overload Factory Limit Fault	–	–	–	X	Shutdown
FLT S21 – CONV OVERLOAD UL	Converter Thermal Overload User Limit Fault	X	X	X	X	Hold
FLT S25 - PRECHARGE FAILURE	Precharge Failure Fault	–	–	–	X	Shutdown
FLT S31 - BUS REG FAILURE	Bus Regulator Failure	–	–	–	X	Shutdown
FLT S35 - BUS OVERVOLT FL	Bus Overvoltage Factory Limit Fault	–	–	–	X	Shutdown
FLT S38 - FUSE BLOWN	Bus Power Fuse Blown Fault	–	–	–	X	Shutdown
FLT S58 -BUS VOLTAGE ERROR	Bus Voltage Error Fault	–	–	–	X	Shutdown
FLT S61 - ENABLE INPUT	Enable Input Deactivated	–	–	–	X	Disable

(1) All modules in the same bus group assert a Bus Power Sharing Exception if they are enabled.

Table 145 - iTRAK Power Supply Behavior, FLT M*xx* Fault Codes

Exception Fault Code	Exception Text	Fault Action				Stopping Action
		Ignore	Alarm	Minor Fault	Major Fault	
FLT M26 - RUNTIME ERROR	Runtime Error	–	–	–	X	Shutdown

Table 146 - iTRAK Power Supply Behavior, NODE FLT Fault Codes

Exception Fault Code	Exception Text	Fault Action				Stopping Action
		Ignore	Alarm	Minor Fault	Major Fault	
NODE FLT 01 - LATE CTRL UPDATE	Control Connection Update Fault	–	–	–	X	Shutdown
NODE FLT 02 - PROC	Processor Watchdog Fault	–	–	–	X	Shutdown
NODE FLT 03 - HARDWARE	Hardware Fault	–	–	–	X	Shutdown
NODE FLT 05 - CLOCK SKEW FLT	Clock Skew Fault	–	–	–	X	Shutdown
NODE FLT 06 - LOST CTRL CONN	Lost Controller Connection Fault	–	–	–	X	Shutdown
NODE FLT 07 - CLOCK SYNC	Clock Sync Fault	–	–	–	X	Shutdown
NODE FLT 09 - DUPLICATE IP ADDRESS	Duplicate IP address Fault	–	–	–	X	Shutdown

Inverter Behavior

For the single-axis inverters and dual-axis inverters, only selected exceptions are configurable. In the drive behavior tables, the controlling attribute is given for programmable fault actions.

Table 147 - Configurable Stopping Actions

Stopping Action	Description	
Ramped Decel & Hold (1)	Most control	The best available stopping action is the one that maintains the most control over the motor. However, not all faults support every stopping action.
Current Decel & Hold	Most control	
Ramped Decel & Disable (1)	Less control	
Current Decel & Disable	Less control	
Disable & Coast (2)	Least control	

(1) Ramped Decel is available only when General>Axis Configuration is set to Velocity Loop or Frequency Control.

(2) When configured for Frequency Control (induction motors only), select Decel & Disable only when the Current Limiting feature is enabled. For more information on this feature, see Current Limiting for Frequency Control on page 424.

Actions define the drive behavior in response to specific conditions. The Actions category includes Standard Actions and Safety Actions.

Table 148 - Actions Definitions

Action Category	Action Name	Action Trigger Condition	Available Actions
Standard	Disable (MSF) Stopping Action	Execution of an MSF motion instruction.	• Ramped Decel & Hold • Current Decel & Hold • Ramped Decel & Disable • Current Decel & Disable • Disable & Coast
	Connection Loss Stopping Action	Loss of the motion connection (for example, inhibiting the module or a network cable disconnect).	• Ramped Decel & Disable • Current Decel & Disable • Disable & Coast
	Motor Overload Action	Receiving MTR OVERLOAD fault.	• Current Foldback • None
	Inverter Overload Action	Receiving INV OVERLOAD fault.	• Current Foldback • None
Safety	Safe Torque Off Action	Transition from logic 0 to 1 of the SafeTorqueOffActiveStatus axis tag, which indicates a safe torque-off action was commanded (STO). (1)	• Ramped Decel & Disable • Current Decel & Disable • Disable & Coast
	Safe Stopping Action	Transition from logic 0 to 1 of the SS1ActiveStatus or SS2ActiveStatus axis tag which indicates a safe stopping action was commanded (SS1, SS2). (2)	• Ramped Decel (3) • Current Decel

(1) This action is executed only if the axis tag transitions due to a requested STO, not if it was triggered by another safe-stop function (SS1, for example).
(2) See Knowledgebase document 1086747 for more information.
(3) Applies to only Velocity Control mode.

Standard Actions

When a control connection update fault (NODE FLT 01) occurs or a controller connection loss fault (NODE FLT 06) occurs, it is possible with firmware revision 11.001 and later, that other node faults can occur first, which triggers a fault action of Current Decel & Disable. Without knowing if NODE FLT 01 or NODE FLT 06 will occur first on a connection loss fault, we recommend that you do not change the default connection loss setting of Current Decel & Disable.

TIP Use DLR ring topology (see Ring Topology on page 30) for applications where the possibility of connection loss must be minimized.

Safety Actions

The Action Source pull-down menus include Connected Drive mode and Running Controller mode.

When configured for Connected Drive (default), the drive initiates the stopping sequence according to the selected stopping action. However, the drive must have an open connection to the motion controller for the configured stopping action to occur.

When configured for Running Controller and the controller is in Run mode, the stopping sequence is controlled by your application program in the motion controller. This provides flexibility based on your application and requires that your program provide the desired action in response to the safety function active status. If no logic is created, no stopping action will occur. If the motion controller is in Program mode (not actively running the application program), the drive ignores the Action Source and initiates the configured stopping sequence according to the corresponding Action selected in the pull-down menu.

Figure 131 - Logix Designer Axis Properties - Actions Category

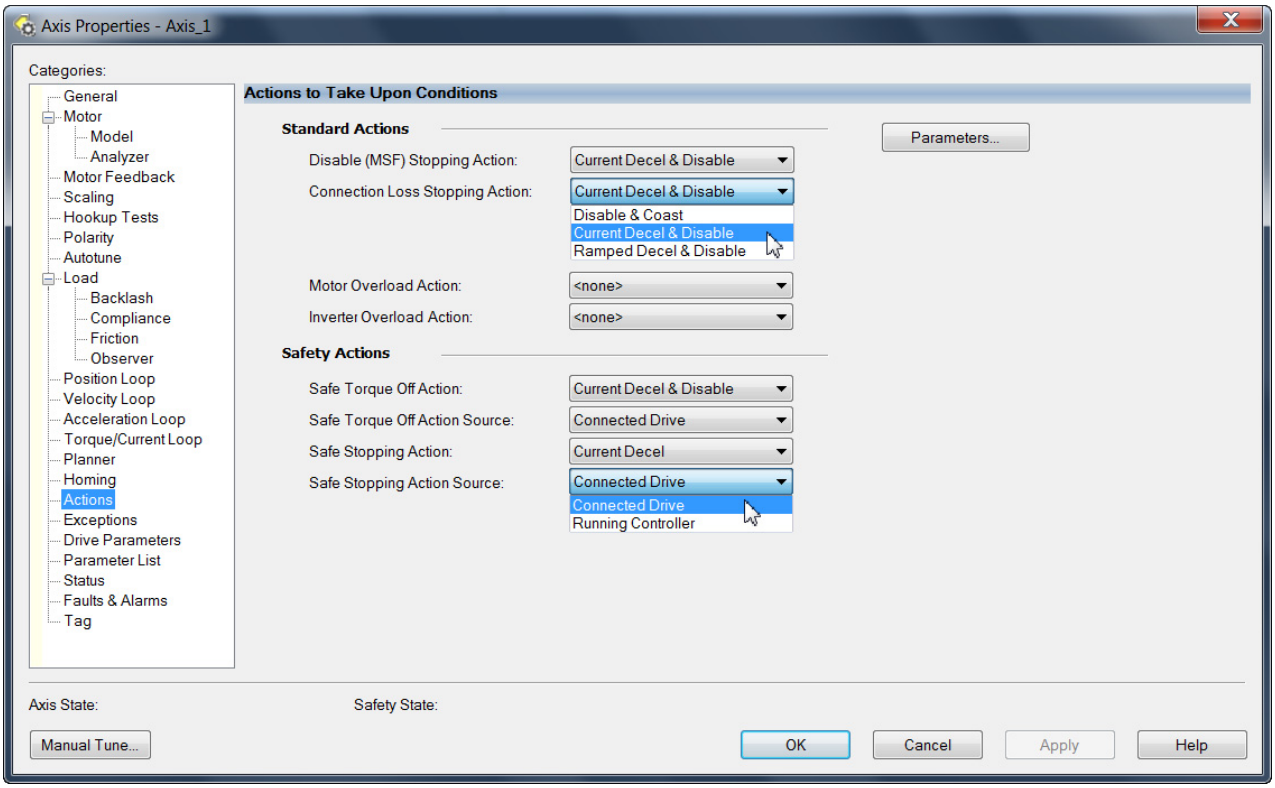

Table 149 - Drive Behavior, FLT S*xx* Fault Codes

Exception Fault Code	Exception Text	Inverter Modules 2198-*xxxx*	Permanent Magnet Motor	Induction Motor	Fault Action				Best Available Stopping Action (applies to major faults)
					Ignore	Alarm	Minor Fault	Major Fault	
FLT S02 – MTR COMMUTATION	Motor Commutation Fault	-ERS*x*	X	–	–	–	–	X	Disable/Coast
FLT S03 – MTR OVERSPEED FL	Motor Overspeed Factory Limit Fault	-ERS*x*	X	X	–	–	–	X	Disable/Coast
FLT S04 – MTR OVERSPEED UL	Motor Overspeed User Limit Fault	-ERS3 (series A)	X	X	X	X	X	X	Decel/Hold
		-ERS4 -ERS3 (series B)							Ramped Decel[5]/Hold
FLT S05 – MTR OVERTEMP FL	Motor Overtemperature Factory Limit Fault	-ERS3 (series A)	X	–	–	–	–	–	Disable/Coast
	Motor Overtemperature Factory Limit Fault (If #589 vertical load control)	-ERS4 -ERS3 (series B)		X	–	–	–	–	Current Decel/Disable
	Motor Overtemperature Factory Limit Fault (If not #589 vertical load control)				–	–	–	–	Disable/Coast

Table 149 - Drive Behavior, FLT S*xx* Fault Codes (continued)

Exception Fault Code	Exception Text	Inverter Modules 2198-*xxxx*	Permanent Magnet Motor	Induction Motor	Fault Action				Best Available Stopping Action (applies to major faults)
					Ignore	Alarm	Minor Fault	Major Fault	
FLT S07 – MTR OVERLOAD FL	Motor Thermal Overload Factory Limit Fault	-ERS3 (series A)	X	X	–	–	–	X	Decel/Disable
		-ERS4 -ERS3 (series B)			–	–	–		Ramped Decel(5)/Disable
FLT S08 – MTR OVERLOAD UL	Motor Thermal OverLoad User Limit Fault	-ERS3 (series A)	X	X	X	X	X	X	Decel/Hold
		-ERS4 -ERS3 (series B)							Ramped Decel(5)/Hold
FLT S09 – MTR PHASE LOSS	Motor Phase Loss	-ERS*x*	X	–	X	X	X	X	Disable/Coast
FLT S10 – INV OVERCURRENT	Inverter Overcurrent Fault	-ERS*x*	X	X	–	–	–	X	Disable/Coast
FLT S11 – INV OVERTEMP FL	Inverter Overtemperature Factory Limit Fault	-ERS3 (series A)	X	X	–	–	–	X	Disable/Coast
	Inverter Overtemperature Factory Limit Fault (If #589 vertical load control)	-ERS4 -ERS3 (series B)			–	–	–		Current Decel/Disable
	Inverter Overtemperature Factory Limit Fault (If not #589 vertical load control)				–	–	–		Disable/Coast
FLT S13 – INV OVERLOAD FL	Inverter Thermal Overload Factory Limit Fault	-ERS3 (series A)	X	X	–	–	–	X	Disable/Coast
		-ERS4 -ERS3 (series B)			–	–	–		Current Decel/Disable
FLT S14 – INV OVERLOAD UL	Inverter Thermal Overload User Limit Fault	-ERS3 (series A)	X	X	X	X	X	X	Decel/Hold
		-ERS4 -ERS3 (series B)							Ramped Decel(5)/Hold
FLT S16 – GROUND CURRENT	Ground Current Factory Limit Fault	-ERS*x* Single-axis inverters	X	X	–	–	–	X	Disable/Coast
FLT S22 – AC POWER LOSS	Converter AC Power Loss Fault	-ERS3 (series A)	X	X	X	X	X	X	Decel/Disable
		-ERS4 -ERS3 (series B)							Ramped Decel(5)/Disable
FLT S27 – BUS REG OVERTEMP FL (1)	Bus Regulator Overtemperature Factory Limit Fault	-ERS*x*	X	X	–	–	–	X	Disable/Coast
FLT S32 – BUS CAPACITOR MODULE FAILURE	Bus Capacitor Module Failure	-ERS3 (series A)	X	X	X	X	X	X	Decel/Hold
		-ERS4 -ERS3 (series B)							Ramped Decel(5)/Hold
FLT S33 – BUS UNDERVOLT FL	Bus Undervoltage Factory Limit Fault	-ERS3 (series A)	X	X	–	–	–	X	Disable/Coast
		-ERS4 -ERS3 (series B)	X	X	–	–	–	X	Disable/Coast (6)
FLT S34 – BUS UNDERVOLT UL	Bus Undervoltage User Limit Fault	-ERS3 (series A)	X	X	X	X	X	X	Decel/Hold
		-ERS4 -ERS3 (series B)							Ramped Decel(5)/Hold
FLT S35 – BUS OVERVOLT FL	Bus Overvoltage Factory Limit Fault	-ERS*x*	X	X	–	–	–	X	Disable/Coast
FLT S37 – BUS POWER LOSS	Bus Power Loss	-ERS3 (series A)	X	X	X	X	X	X	Decel/Disable
		-ERS4 -ERS3 (series B)							Ramped Decel(5)/Disable
FLT S38 – FUSE BLOWN	Bus Power Fuse Blown Fault	-ERS*x*	X	X	–	–	–	X	Disable/Coast
FLT S40 – BUS POWER SHARING FAULT	Bus Power Sharing Fault	-ERS3 (series A)	X	X	X	X	X	X	Decel/Disable
		-ERS4 -ERS3 (series B)							Ramped Decel(5)/Disable
FLT S41 – MTR AQB STATE FL	Feedback Signal Noise FL	-ERS*x*	X	X	–	–	–	X	Disable/Coast
FLT S43 – FDBK LOSS FL (2) (4)	Feedback Signal Loss FL	-ERS*x*	X	X	–	–	–	X	Disable/Coast
FLT S44 – FDBK LOSS UL (2) (4)	Feedback Signal Loss UL	-ERS3 (series A)	X	X	X	X	X	X	Decel/Hold
		-ERS4 -ERS3 (series B)							Ramped Decel(5)/Hold

Table 149 - Drive Behavior, FLT S*xx* Fault Codes (continued)

Exception Fault Code	Exception Text	Inverter Modules 2198-*xxxx*	Permanent Magnet Motor	Induction Motor	Fault Action				Best Available Stopping Action (applies to major faults)
					Ignore	Alarm	Minor Fault	Major Fault	
FLT S45 – FDBK COMM FL (3) (4)	Motor Feedback Data Loss Factory Limit Fault	-ERS*x*	X	X	–	–	–	X	Disable/Coast
FLT S46 – FDBK COMM UL (2) (4)	Motor Feedback Data Loss User Limit Fault	-ERS3 (series A)	X	X	X	X	X	X	Decel/Hold
		-ERS4 -ERS3 (series B)							Ramped Decel(5)/Hold
FLT S47 – FDBK DEVICE FAILURE	Feedback Device Failure	-ERS*x*	X	X	–	–	–	X	Disable/Coast
FLT S49 – BRAKE SLIP FLT	Brake Slip Exception	-ERS3 (series A)	X	X	X	X	X	X	Decel/Hold
		-ERS4 -ERS3 (series B)							Ramped Decel(5)/Hold
FLT S50 – POS HW OTRAVEL	Hardware Overtravel - Positive	-ERS3 (series A)	X	X	X	X	X	X	Decel/Hold
		-ERS4 -ERS3 (series B)							Ramped Decel(5)/Hold
FLT S51 – NEG HW OTRAVEL	Hardware Overtravel - Negative	-ERS3 (series A)	X	X	X	X	X	X	Decel/Hold
		-ERS4 -ERS3 (series B)							Ramped Decel(5)/Hold
FLT S54 – POSN ERROR (4)	Excessive Position Error Fault	-ERS3 (series A)	X	X	X	X	X	X	Disable/Coast
	Excessive Position Error Fault (If #589 vertical load control)	-ERS4 -ERS3 (series B)							Current Decel/Disable
	Excessive Position Error Fault (If not #589 vertical load control)								Disable/Coast
FLT S55 – VEL ERROR (4)	Excessive Velocity Error Fault	-ERS3 (series A)	X	X	X	X	X	X	Disable/Coast
	Excessive Velocity Error Fault (If #589 vertical load control)	-ERS4 -ERS3 (series B)							Current Decel/Disable
	Excessive Velocity Error Fault (If not #589 vertical load control)								Disable/Coast
FLT S56 – OVERTORQUE LIMIT (4)	Overtorque Limit Fault	-ERS3 (series A)	X	X	X	X	X	X	Decel/Hold
		-ERS4 -ERS3 (series B)							Ramped Decel(5)/Hold
FLT S57 – UNDERTORQUE LIMIT (4)	Undertorque Limit Fault	-ERS3 (series A)	X	X	X	X	X	X	Decel/Hold
		-ERS4 -ERS3 (series B)							Ramped Decel(5)/Hold
FLT S61 – ENABLE INPUT	Enable Input Deactivated	-ERS3 (series A)	X	X	X	X	X	X	Disable/Coast
		-ERS4 -ERS3 (series B)							Ramped Decel(5)/Disable

(1) Supported when shunt thermal switch is connected to the inverter digital input and configured in the Logix Designer application.
(2) Applies to all compatible feedback devices, except DSL encoder feedback.
(3) Applies to DSL and Hiperface feedback devices.
(4) Does not apply to induction motors in frequency control mode.
(5) Available only in Velocity Control mode. Available stopping action is Current Decel in Position Control mode.
(6) Drives running firmware revision 11.003 or earlier use Stopping Time Limit attribute instead of the Coasting Time Limit attribute to determine when the brake will engage.

Table 150 - Drive Behavior, FLT M*xx* Fault Codes

Exception Fault Code	Exception Text	Inverter Modules 2198-*xxxx*	Permanent Magnet Motor	Induction Motor	Fault Action				Best Available Stopping Action (applies to major faults)
					Ignore	Alarm	Minor Fault	Major Fault	
FLT M02 – MOTOR VOLTAGE (1)	Motor Voltage Mismatch Fault	-ERS*x*	X	X	X	X	X	X	Disable/Coast
FLT M05 – FDBK BATTERY LOSS	Feedback Battery Loss Fault	-ERS4 -ERS3 (series B)	X	–	–	–	–	X	Disable/Coast
FLT M06 – FDBK BATTERY LOW	Feedback Battery Low Fault		X	–	X	X	X	X	Disable/Coast
FLT M07 – FEEDBACK INCREMENTAL COUNT ERROR FAULT	Feedback Incremental Count Error Fault	-ERS*x*	X	X	X	X	X	X	Disable/Coast
FLT M26 – RUNTIME ERROR	Runtime Error	-ERS*x*	X	X	–	–	–	X	Disable/Coast
FLT M28 – SAFETY COMM (2)	Safety Module Communication Error	-ERS*x*	X	X	–	–	–	X	Disable/Coast

(1) Does not apply to induction motors in frequency control mode.
(2) Applies to drives in Integrated STO mode.

Table 151 - Drive Behavior, NODE FLT Fault Codes

Exception Fault Code	Exception Text	Inverter Modules 2198-*xxxx*	Permanent Magnet Motor	Induction Motor	Fault Action				Best Available Stopping Action (applies to major faults)
					Ignore	Alarm	Minor Fault	Major Fault	
NODE FLT 01 – LATE CTRL UPDATE	Control Connection Update Fault	-ERS3 (series A)	X	X	–	–	–	X	Decel/Disable
		-ERS4 -ERS3 (series B)			–	–	–		Ramped Decel(1)/Disable
NODE FLT 02 – PROC WATCHDOG	Processor Watchdog Fault	-ERS*x*	X	X	–	–	–	X	Disable/Coast
NODE FLT 03 – HARDWARE	Hardware Fault	-ERS*x*	X	X	–	–	–	X	Disable/Coast
NODE FLT 05 – CLOCK SKEW FLT	Clock Skew Fault	-ERS3 (series A)	X	X	–	–	–	X	Decel/Disable
		-ERS4 -ERS3 (series B)			–	–	–		Ramped Decel(1)/Disable
NODE FLT 06 – LOST CTRL CONN	Lost Controller Connection Fault	-ERS3 (series A)	X	X	–	–	–	X	Decel/Disable
		-ERS4 -ERS3 (series B)			–	–	–		Programmable per (2) Connection Loss Stopping Action (see Table 148 on page 288).
NODE FLT 07 – CLOCK SYNC	Clock Sync Fault	-ERS3 (series A)	X	X	–	–	–	X	Decel/Disable
		-ERS4 -ERS3 (series B)			–	–	–		Ramped Decel(1)/Disable
NODE FLT 09 – DUPLICATE IP ADDRESS	Duplicate IP Address Fault	-ERS*x*	X	X	–	–	–	X	Disable/Coast

(1) Available only in Velocity Control mode. Available stopping action is Current Decel in Position Control mode.
(2) With firmware revision 9.*xxx*. Do not change the default stopping action.

Remove and Replace Drive Modules

This chapter provides remove and replace procedures for Kinetix® 5700 drive modules.

Topic	Page
Before You Begin	293
Remove and Replace Kinetix 5700 Drive Modules	294
Start and Configure the Drive Module	300

ATTENTION: This drive contains electrostatic discharge (ESD) sensitive parts and assemblies. You are required to follow static-control precautions when you install, test, service, or repair this assembly. If you do not follow ESD control procedures, components can be damaged. If you are not familiar with static control procedures, refer to Guarding Against Electrostatic Damage, publication 8000-4.5.2, or any other applicable ESD awareness handbook.

Before You Begin

When each drive module is installed, network settings are configured from the setup screens. Before removing the module, revisit the Network menu and make note of the static IP or DHCP settings. Refer to Configure the Drive on page 194 to access those settings.

IMPORTANT If you intend to use the same Logix Designer application after replacing your drive module, the new module must be the same catalog number as the old module.

You also need these tools available before you begin removal and replacement procedures:

- Screwdrivers (to loosen/remove screws)
- Voltmeter (to make sure that no voltage exists on drive connectors)

Remove and Replace Kinetix 5700 Drive Modules

Follow these steps to remove and replace DC-bus power supplies, regenerative bus supplies, dual-axis inverters, single-axis inverters, iTRAK® power supplies, or accessory modules from the system panel.

Remove Power and All Connections

1. Verify that all control and input power has been removed from the system.

> **ATTENTION:** To avoid shock hazard or personal injury, make sure that all power has been removed before proceeding. This system can have multiple sources of power. More than one disconnect switch can be required to de-energize the system.

2. Wait 5 minutes for the DC bus to discharge completely before proceeding.

> **SHOCK HAZARD:** This product contains stored energy devices. To avoid the hazard of electrical shock, verify that voltage on capacitors has been discharged before attempting to service, repair, or remove this unit. Do not attempt the procedures in this document unless you are qualified to do so and are familiar with solid-state control equipment and the safety procedures in publication NFPA 70E.

3. Using a voltmeter, verify that the DC-bus voltage has discharged, and for iTRAK power supply, verify that the output bus (ICP and IDC connectors) has discharged.
4. Label and remove all wiring connectors from the module that you are removing.

   To identify each connector, refer to Kinetix 5700 Connector Data on page 92.

   TIP For 2198-P*xxx* DC-bus power supplies, you do not need to remove the shunt (RC) connector, unless there is an external shunt wired to it.

5. Unplug the DC-bus links and end caps from on top of the power supply, inverters, and accessory modules you are removing.
6. Unplug the shared-bus 24V input wiring connector, T-connectors, and bus-bars from on top of the drive module that you are removing (if applicable).

7. For 2198-D*xxx*-ERS*x* dual-axis inverters, unplug the motor feedback, motor power, and motor brake connectors and loosen the shield clamp until you can remove the cable from the clamp.

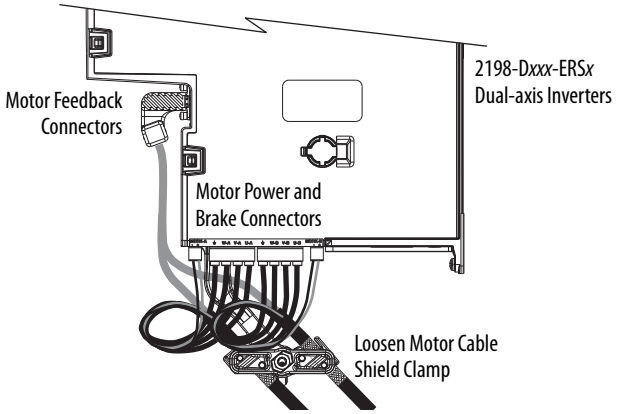

8. Single-axis inverters differ by catalog number in how the motor cable bracket attaches to the drive, when the bracket is used.
   a. For 2198-S086-ERS*x,* 2198-S130-ERS*x*, and 2198-S160-ERS*x* single-axis inverters, unplug the motor feedback and brake connectors, remove the tie wrap, and remove the motor power bracket.

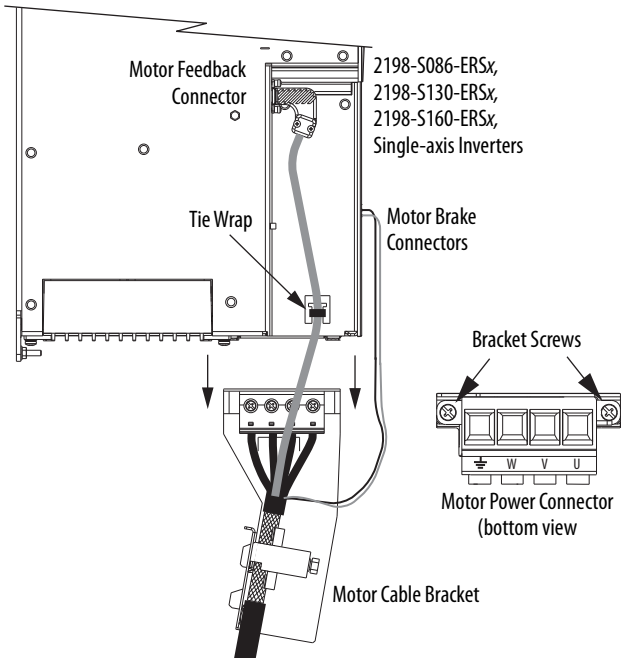

b. For 2198-S263-ERS*x* and 2198-S312-ERS*x* single-axis inverters, unplug the motor feedback and brake connectors, and remove the tie wrap holding the feedback cable.

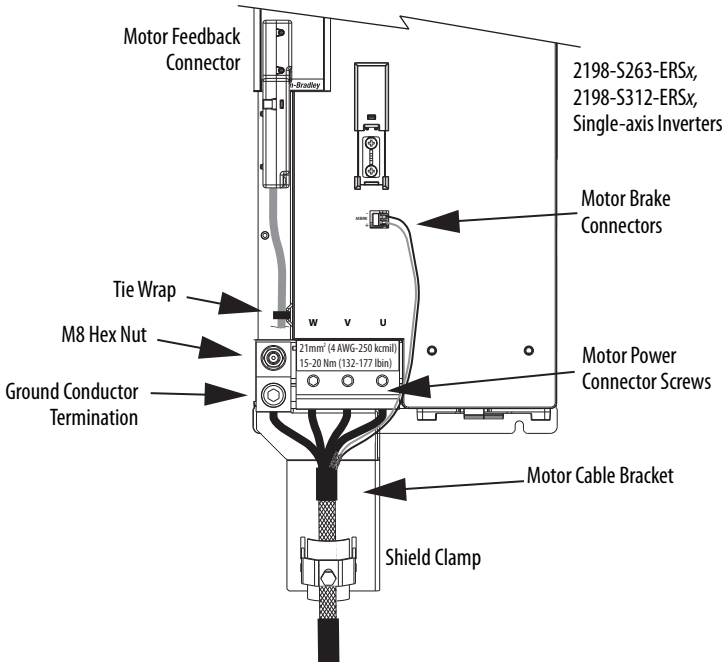

If your axis uses 2090-CPBM7DF power/brake (2 or 4 AWG) cable, remove the motor power cable and bracket from the drive (do not loosen the shield clamp). Refer to the steps and illustrations on page 165 to see how the bracket is attached.

If your axis uses customer-supplied cable (larger than 2 or 4 AWG), the motor cable bracket does not apply.

9. For 2198T-W25K-ER iTRAK power supplies, unplug the iPS ready connector, 24V control power output connectors, and DC-bus output connectors.
10. Loosen the shield clamp until you can remove the cable from the clamp.

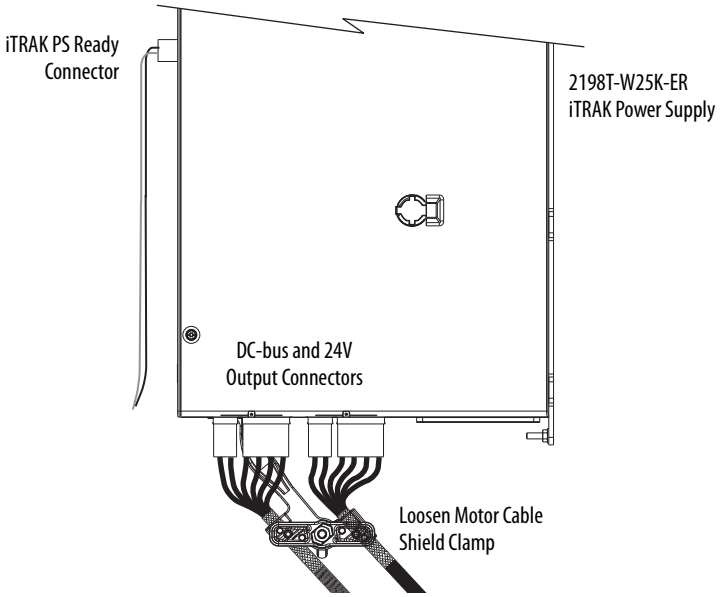

11. Remove the ground screw or lug nut and braided ground strap.

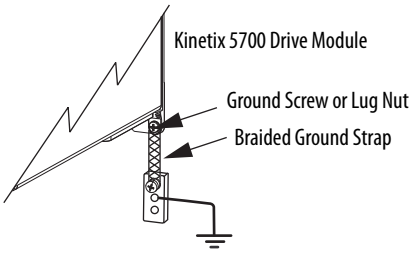

Remove the Drive Module

You can remove DC-bus power supplies, regenerative bus supplies, dual-axis inverters, single-axis inverters, iTRAK power supplies, or accessory modules from the panel in any configuration by using the same procedure.

IMPORTANT This procedure applies to any Kinetix 5700 drive module in any configuration.

Follow these steps to remove Kinetix 5700 drive modules from the panel.

1. Loosen the top and bottom screws of the module you are removing.

   Modules with 55 mm width have one top and bottom screw. Two or more top and bottom screws are present on modules of greater width.

2. Handling and positioning of the 2198-RP*xxx* regenerative bus supply and all other Kinetix 5700 drive modules, varies by catalog number. Follow these steps to lift and remove the modules.

   a. For the 2198-RP088 regenerative bus supply and all other Kinetix 5700 drive modules, grasp the top and bottom of the module with both hands and pull the module straight out and away from the panel, clearing the zero-stack mounting tabs and cutouts.

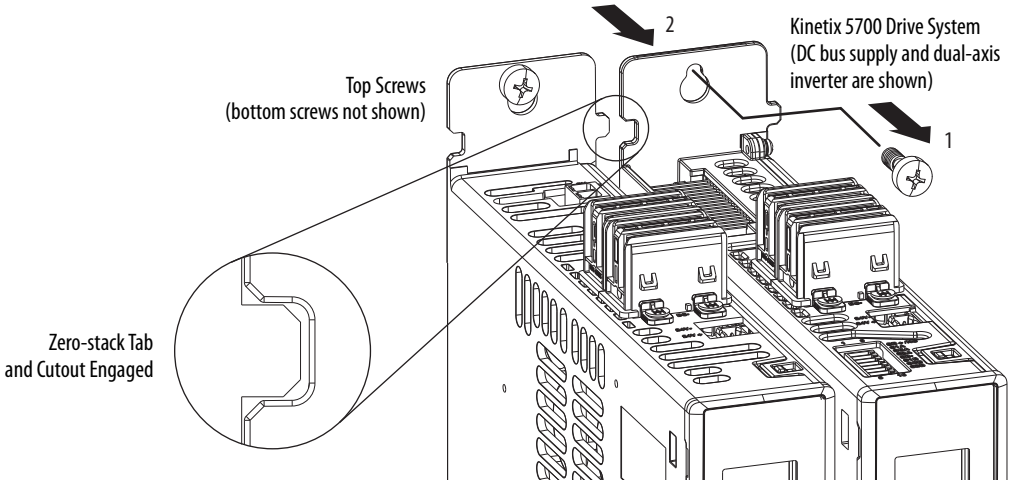

   b. For the 2198-RP200, 2198-RP263, and 2198-RP312, modules, a hoist, straps, and J-hooks with a lockable clasp capable of supporting the maximum module weight is required to lift the module off the mounting screws and away from the panel.

   For lifting instructions, see the Kinetix 5700 Regenerative Bus Supply Installation Instructions, publication 2198-IN014.

Replace the Drive Module

To replace the drive module, reverse the steps that are shown above or refer to Mount Your Kinetix 5700 Drive Modules on page 88.

Table 152 - Drive Module Torque Values

Kinetix 5700 Drive Module Cat. No.	**Fasteners**	**Torque Value** N•m (lb•in)
All Kinetix 5700 Bulletin 2198-drive modules	Module mounting screws	4.0 (35.4)
	Module ground lug	
2198-P*xxx*, 2198-RP088, 2198-RP200	Input power connector screws	0.8 (7.1)
2198-RP263, 2198-RP312		15…20 (132…177)
	Input power ground screw	5.6 (50.0)
2198-S*xxx*-ERS*x*	Shield clamp screw	5.6 (50.0)
2198-D*xxx*-ERS*x*, 2198-S*xxx*-ERS*x*	Feedback connector kit screws	0.4 (3.5)
2198-S086-ERS*x*, 2198-S130-ERS*x*, 2198-S160-ERS*x*	Motor power bracket screws	0.8 (7.1)
2198-S263-ERS*x*, 2198-S312-ERS*x*	Motor power connector screws	15…20 (132…177)
	Motor power ground screw	5.6 (50.0)

If replacing a drive module that was configured for Integrated STO mode, refer to Understand Integrated Safety Drive Replacement on page 329.

Start and Configure the Drive Module

Follow these steps to configure the replacement module.

IMPORTANT If you intend to use the same Logix Designer application after replacing your drive module, the new module must be the same catalog number as the old module.

IMPORTANT If a servo drive was previously configured by a safety controller, reset the drive to the Out of Box state. Refer to Out of Box State on page 306.

1. Reapply power to the drive system.

   Refer to Apply Power to the Kinetix 5700 Drive System on page 264 for the procedure.

2. Configure the network settings for the drive module.

   For example, if your old module was configured as Static IP, you must set the IP address, gateway, and subnet mask in the new module identical to the old module.

   Refer to Configure the Drive on page 194 to access those settings.

3. If you are replacing a 2198-*xxxx*-ERS3 (series A) drive with a 2198-*xxxx*-ERS3 (series B) drive, see Replacing 2198-xxxx-ERS3 (series A) Drives with Series B Drives for more information.

4. Download the Logix Designer application to the controller.

5. Verify that the drive system is working properly.

Replacing 2198-*xxxx*-ERS3 (series A) Drives with Series B Drives

When replacing a 2198-*xxxx*-ERS3 (series A) drive with a 2198-*xxxx*-ERS3 (series B) drive, the procedure depends on how Electronic Keying is configured in the Module Definition.

IMPORTANT If Electronic Keying in the Module Definition is configured for Exact Match, the following guidelines apply:

- The Module Definition Revision level must match the 2198-*xxxx*-ERS3 (series B) drive firmware (revision 9 or later)
- For backwards compatibility with series A drives, Motion Safety in the Module Definition of the 2198-*xxxx*-ERS3 (series B) drive must be configured for STO Only

Figure 132 - Module Definition for 2198-*xxxx*-ERS3 (series B) drives

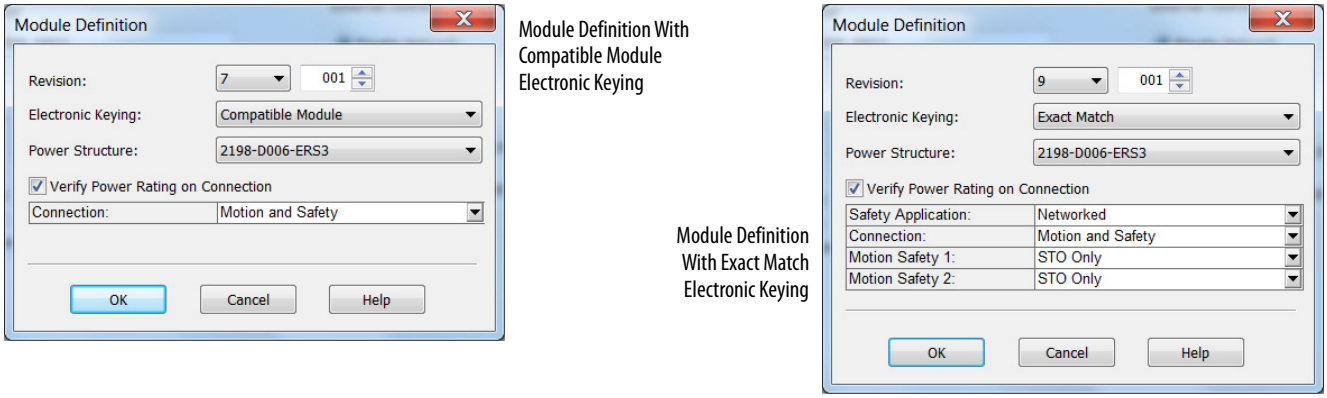

In this flowchart, a 2198-*xxxx*-ERS3 series A drive (with drive firmware revision 7 or earlier) was programmed by using Studio 5000 Logix Designer®, version 30 or earlier, and is replaced by a 2198-*xxxx*-ERS3 series B drive (with drive firmware revision 9 or later).

Figure 133 - 2198-*xxxx*-ERS3 (series B) Replacement Drive Flowchart

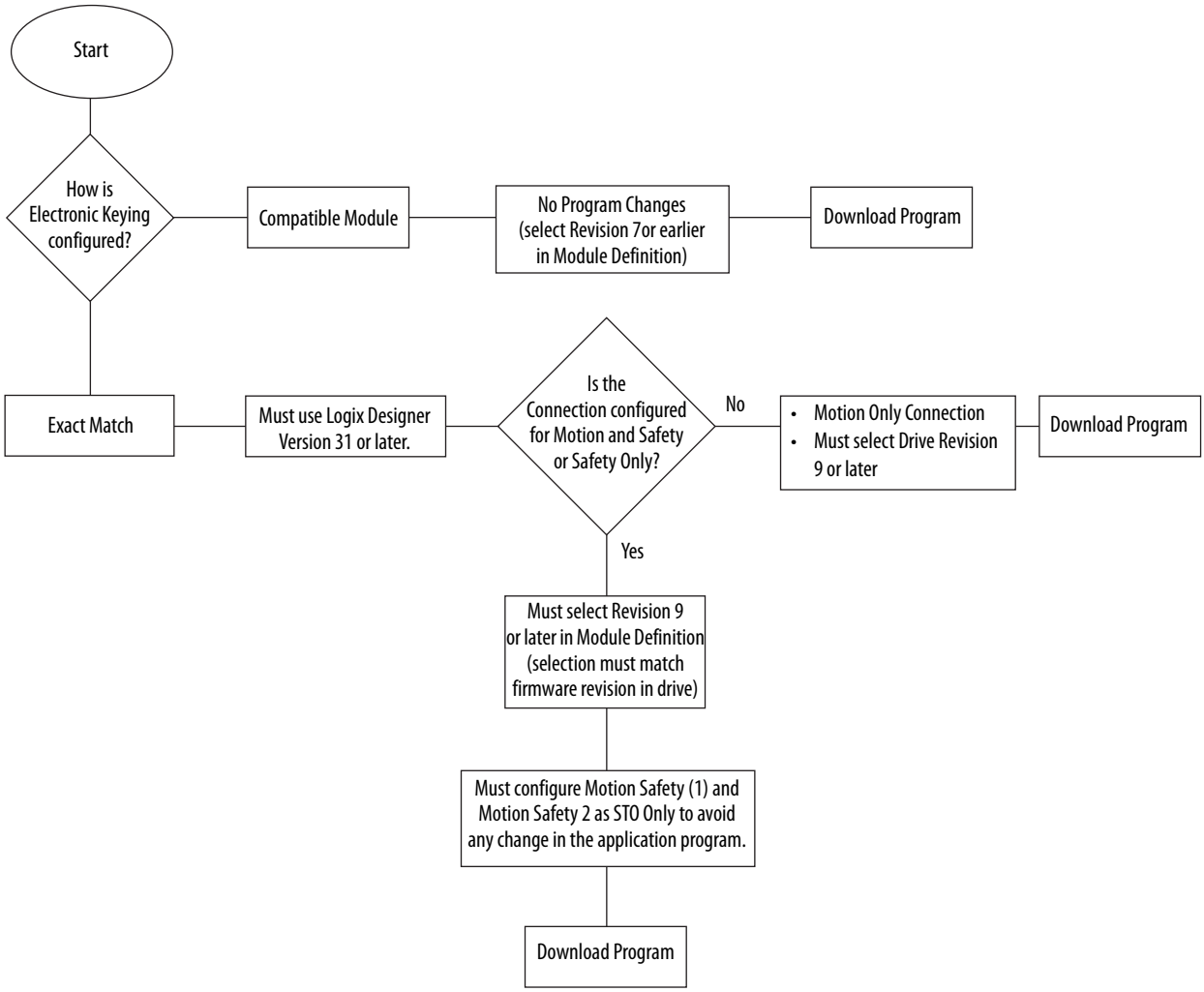

Notes:

Kinetix 5700 Safe Torque-off Function

Use this chapter to become familiar with the safe torque-off functionality built into Kinetix® 5700 dual-axis and single-axis inverters.

Topic	Page
Overview	303
Hardwired Safe Torque-off	312
Integrated Safe Torque-off	322

Overview

The Kinetix 5700 dual-axis and single-axis inverters are equipped for hardwired safe torque-off (STO). Hardwired STO mode, as described in this chapter, applies to 2198-*xxxx*-ERS3 and 2198-*xxxx*-ERS4 dual-axis and single-axis inverters.

The Kinetix 5700 dual-axis and single-axis inverters are also equipped for integrated safe torque-off (STO) over the EtherNet/IP™ network. Integrated STO mode, as described in this chapter, applies to 2198-*xxxx*-ERS3 and 2198-*xxxx*-ERS4 dual-axis and single-axis inverters.

The integrated Monitored SS1 and Timed SS1 stopping functions are supported by the 2198-D*xxx*-ERS4 dual-axis and 2198-S*xxx*-ERS4 single-axis inverters. For integrated Monitored SS1 and Timed SS1 stopping function operations, see the Kinetix 5700 Safe Monitor Functions Safety Reference Manual, publication 2198-RM001.

Table 153 - Kinetix 5700 Functional Safety Mode Support

Safety Mode	Dual-axis Inverters Cat. No.	Single-axis Inverters Cat. No.
Hardwired STO mode	2198-D*xxx*-ERS3	2198-S*xxx*-ERS3
	2198-D*xxx*-ERS4	2198-S*xxx*-ERS4
Integrated STO mode	2198-D*xxx*-ERS3	2198-S*xxx*-ERS3
	2198-D*xxx*-ERS4	2198-S*xxx*-ERS4
Monitored SS1 stopping function	2198-D*xxx*-ERS4	2198-S*xxx*-ERS4
Timed SS1 stopping function	2198-D*xxx*-ERS4 2198-D*xxx*-ERS3 (series B)	2198-D*xxx*-ERS4 2198-S*xxx*-ERS3 (series B)

The hardwired and integrated STO modes and SS1 stopping functions meet the requirements of Performance Level e (PL e) per ISO 13849-1 and SIL CL 3 per IEC 61508, IEC 61800-5-2 and IEC 62061.

Certification

The TÜV Rheinland group has approved 2198-D*xxx*-ERS*x* and 2198-S*xxx*-ERS*x* inverters with hardwired and integrated safe torque-off for use in safety-related applications up to ISO 13849-1 Performance Level e (PL e), SIL CL 3 per IEC 61508, IEC 61800-5-2, and IEC 62061, in which removing the motion producing power is considered to be the safe state.

For product certifications currently available from Rockwell Automation, go to rok.auto/certifications.

Important Safety Considerations

The system user is responsible for the following:

- Validation of any sensors or actuators connected to the system
- Completing a machine-level risk assessment
- Certification of the machine to the desired ISO 13849 performance level or IEC 62061 SIL level
- Project management and proof testing in accordance with ISO 13849

Stop Category Definition

Stop Category 0 as defined in IEC 60204 or safe torque-off as defined by IEC 61800-5-2 is achieved with immediate removal of motion producing power to the actuator.

IMPORTANT	In the event of a malfunction, the most likely stop category is Stop Category 0. When designing the machine application, timing and distance must be considered for a coast to stop. For more information regarding stop categories, refer to IEC 60204-1.

Performance Level (PL) and Safety Integrity Level (SIL)

For safety-related control systems, Performance Level (PL), according to ISO 13849-1, and SIL levels, according to IEC 61508 and IEC 62061, include a rating of the systems ability to perform its safety functions. All of the safety-related components of the control system must be included in both a risk assessment and the determination of the achieved levels.

Refer to the ISO 13849-1, IEC 61508, and IEC 62061 standards for complete information on requirements for PL and SIL determination.

Average Frequency of a Dangerous Failure

Safety-related systems are classified as operating in a High-demand/continuous mode. The SIL value for a High-demand/continuous mode safety-related system is directly related to the probability of a dangerous failure per hour (PFH).

PFH calculation is based on the equations from IEC 61508 and show worst-case values. Table 154 provides data for a 20-year proof test interval and demonstrates the worst-case effect of various configuration changes on the data.

IMPORTANT Determination of safety parameters is based on the assumptions that the system operates in High-demand mode and that the safety function is requested at least once every three months.

Table 154 - PFH for 20-year Proof Test Interval (STO function)

Attribute	2198-S*xxx*-ERS3 Single-axis Inverters	2198-D*xxx*-ERS3 Dual-axis Inverters
PFH (1e-9)	1.57	1.64
HFT (hardware fault tolerance) (1)	1	1
Proof test (years)	20	20

(1) Hardware fault tolerance is the minimum number of faults that can cause a loss of the safety function as defined by IEC 61508-2.

Safe Torque-off Feature

The safe torque-off (STO) circuit, when used with suitable safety components, provides protection according to ISO 13849-1 (PL e), according to IEC 61508, IEC 61800-5-2, and IEC 62061 (SIL CL 3). All components in the system must be chosen and applied correctly to achieve the desired level of operator safeguarding.

The 2198-*xxxx*-ERS3 and 2198-*xxxx*-ERS4 STO circuit is designed to turn off all of the output-power transistors when the STO function is requested. You can use the 2198-*xxxx*-ERS*x* STO circuit in combination with other safety devices to achieve a Stop Category 0 stop as described in Stop Category Definition on page 304, and protection-against-restart as specified in IEC 60204-1.

ATTENTION: The safe torque-off (STO) feature is suitable only for performing mechanical work on the drive system or affected area of a machine. It does not provide electrical safety.

SHOCK HAZARD: In Safe Torque-off mode, hazardous voltages can still be present at the drive. To avoid an electric shock hazard, disconnect power to the system and verify that the voltage is zero before performing any work on the drive.

ATTENTION: Personnel responsible for the application of safety-related programmable electronic systems (PES) shall be aware of the safety requirements in the application of the system and shall be trained in using the system.

Out of Box State

Kinetix 5700 servo drives are capable of safe torque-off (STO) functionality in Hardwired STO mode or Integrated STO mode. Out of the box, the Kinetix 5700 servo drives are in Hardwired STO mode, which means they are ready for hardwired connections to the safety (STO) connector. To bypass the hardwired safety function, jumper wires must be installed in the STO connector.

IMPORTANT Out of the box, Kinetix 5700 servo drives are in Hardwired STO mode.

IMPORTANT To bypass the STO feature while commissioning or testing the drive, the drive must be configured for Hardwired STO mode. Refer to Safe Torque-off Feature Bypass on page 320 for a wiring example.

Out of the box, you can use Kinetix 5700 servo drives in Integrated STO mode only after a Motion and Safety or Safety-only connection has been established at least once in the Logix Designer application.

How to Recognize Hardwired STO Mode

You can read the safety control state from the axis tag AxisSafetyState, or by using an MSG command in the Logix Designer application to read the Safety Supervisor status.

In Hardwired STO mode, if STO inputs are OFF then Safety Supervisor state is Not Configured (8) and if STO inputs are ON then Safety Supervisor state is Not Configured, torque permitted (51).

Table 155 - Safety Supervisor States

Value	Safety Supervisor State	Definition	Safety Mode
2	Configured (no safety connection)	No active connections	Integrated
4	Running	Normal running state	Integrated
7	Configuring	Transition state	Integrated
8	Not Configured	Hardwired STO mode with torque disabled	Hardwired (out of the box)
51	Not Configured (torque permitted)	Hardwired STO mode with torque permitted	Hardwired (out of the box)
52	Running (torque permitted)	STO bypass state	Integrated

Restore the Hardwired STO Mode by Using the Logix Designer Application

IMPORTANT This section applies to 2198-*xxxx*-ERS3 (series A) drives. The 2198-*xxxx*-ERS4 and 2198-*xxxx*-ERS3 (series B) drives are configured for Hardwired or Networked mode in the Module Definition dialog box under Module Properties>General category.

After the integrated safety connection configuration is applied to the Kinetix 5700 servo drive at least once, you can restore the drive to the Hardwired STO mode by using the Logix Designer application.

IMPORTANT Only authorized personnel should attempt Reset Ownership.

The safety connection must be inhibited before the reset is attempted. If any active connection is detected, the safety reset is rejected and Reset Failed appears on the display.

Follow these steps to restore your Kinetix 5700 servo drive to the Hardwired STO mode.

1. Right-click the Kinetix 5700 servo drive you just created and choose Properties.

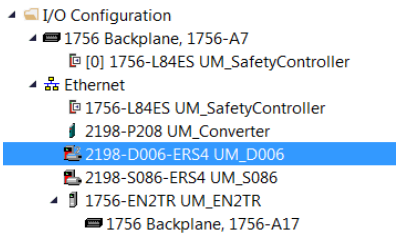

2. Select the Connection category.

   The Connection category appears.

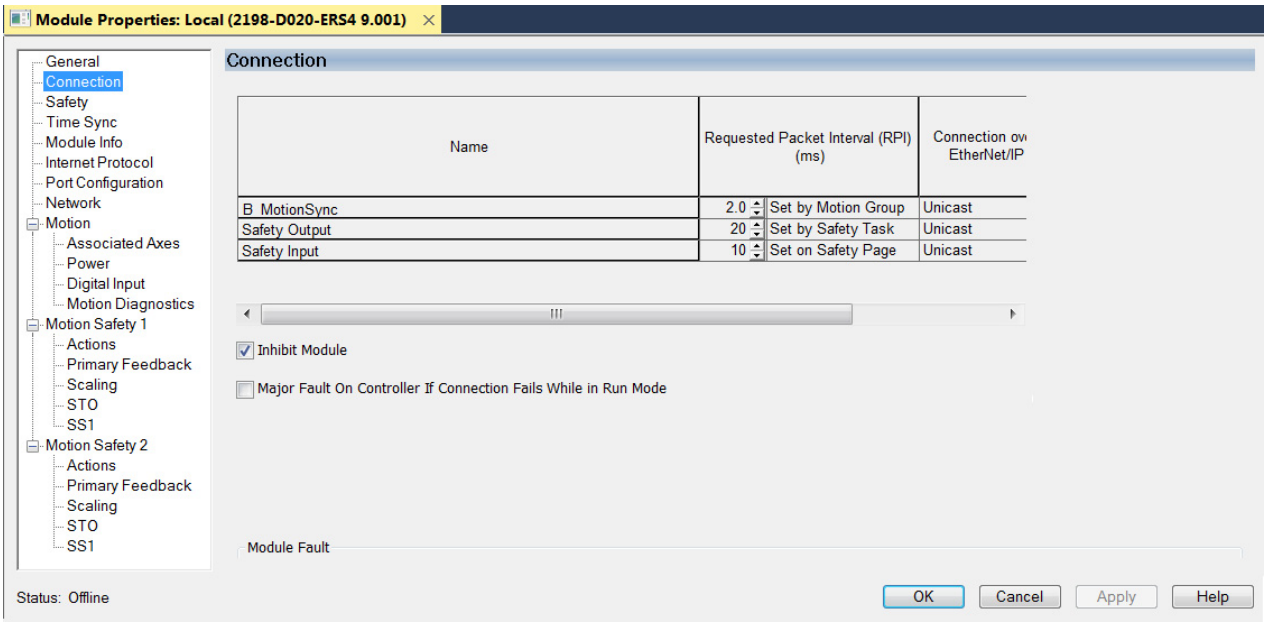

3. Check Inhibit Module.
4. Click Apply.

5. Click the Safety category.

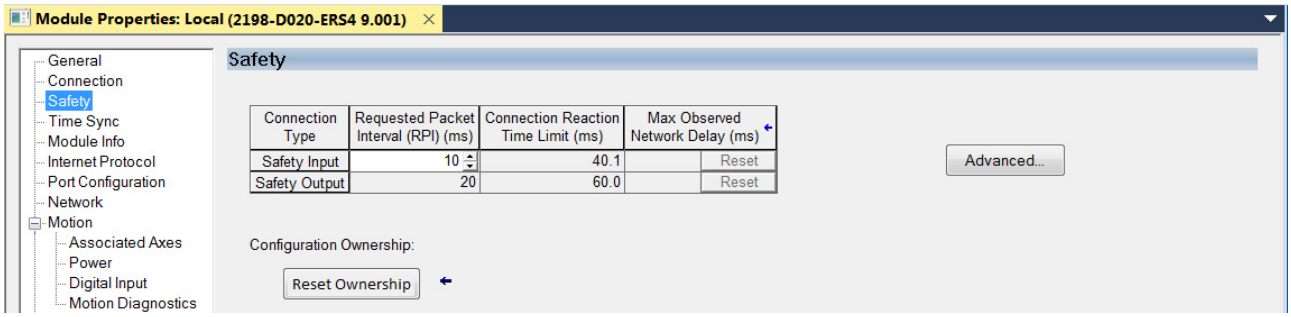

6. In the Configuration Ownership field, click Reset Ownership.

   The drive reverts back to Hardwired STO mode.

7. Click OK.

Restore Hardwired STO mode by Using the Drive Display

After the integrated safety connection configuration is applied to the Kinetix 5700 servo drive at least once, you can restore the drive to Hardwired STO mode by using the drive display and navigation buttons.

IMPORTANT Only authorized personnel should attempt Reset Ownership.

The safety connection must be inhibited before the reset is attempted. If any active connection is detected, the safety reset is rejected and Reset Failed appears on the display.

Follow these steps to restore your Kinetix 5700 drive to the Hardwired STO mode.

1. Disable any Motion and Safety connections configured in the Logix Designer application.

   You can do this in Module Properties or by unplugging the Ethernet cable.

2. From the Home screen on the drive display, press the settings button.

3. From the SETTINGS menu, scroll down by using the arrows and select SAFETY.

4. Press to request a Reset Ownership.

   Are You Sure? appears on the display.

5. Press to acknowledge and begin the reset ownership.

   If a reset ownership is requested, but not acknowledged within 30 seconds, the display automatically reverts back to the Home screen and the drive does not complete the reset ownership.

   If a reset ownership is requested and acknowledged within 30 seconds, the drive reverts back to Hardwired STO mode.

Safe Torque-off Status

This section describes the safety related status data that is available to the motion controller.

IMPORTANT The status data described in this section is STANDARD data (not SAFETY data) and cannot be used as part of a safety function.

When a Kinetix 5700 add on profile (AOP) is added to a Logix Designer application I/O tree, axis tags are added to the controller tags.

This table lists the safety related STANDARD tags that are added when a new AXIS_CIP_DRIVE axis is defined.

Table 156 - Safety Related Axis Tags

Logix Designer Tag Name	Attribute [bit]	Type	Description
AxisFaults	34	DINT	
GuardFaultStatus	[5]	BOOL	STO fault - Hardwired
SafetyFaultStatus	[8]	BOOL	STO fault - Integrated
ModuleFaults	163	DINT	
GuardStatus	980	DINT	
GuardOKStatus	[0]	BOOL	Not STO fault - Hardwired
GuardGateDriveOutputStatus	[2]	BOOL	Torque allowed - Hardwired
GuardStopInputStatus	[3]	BOOL	Safety inputs active - Hardwired
GuardStopRequestStatus	[4]	BOOL	Safety input requesting STO - Hardwired
GuardFault	981	DINT	
GuardStopInputFault	[9]	BOOL	STO fault - Hardwired
GuardGateDriveFault	[2]	BOOL	Internal STO circuit fault - Hardwired
CIPAxisFaultsRA	903	DINT	
SafetyModuleCommunicationErrorFault	[28]	BOOL	Loss of communication to safety control
CIPAxisAlarmsRA	904	DINT	
SafetyModuleCommunicationErrorAlarm	[28]	BOOL	Loss of communication to safety control
CIPInitializationFaultsRA	910	DINT	
InvalidSafetyFirmwareFault	[14]	BOOL	Invalid safety control firmware
CIPStartInhibits	676	DINT	
SafeTorqueOffActiveInhibit	[5]	BOOL	Torque disabled - Integrated
CIPStartInhibitsRA	912	DINT	
SafeTorqueOffInhibit	[5]	BOOL	Torque disabled - Hardwired
AxisSafetyState	760	DINT	Safety supervisor state
AxisSafetyStatus (1)	761	DINT	
SafetyFaultStatus	[0]	BOOL	Status of SI.SafetyFault
SafetyResetRequestStatus	[1]	BOOL	Status of SO.Reset or SO.ResetRequest
SafetyResetRequiredStatus	[2]	BOOL	Status of SI.ResetRequired
SafeTorqueOffActiveStatus	[3]	BOOL	Status of SO.SafeTorqueOff or SO.STOOutput

Table 156 - Safety Related Axis Tags (continued)

Logix Designer Tag Name	Attribute [bit]	Type	Description
SafeTorqueOffDisableStatus	[4]	BOOL	Status of SI.TorqueDisabled
SafetyOutputConnectionClosed	[30]	BOOL	1 if all output connections are closed
SafetyOutputConnectionIdleStatus	[31]	BOOL	1 if safety controller is in program mode
AxisSafetyFaults	763	DINT	
SafetyCoreFault	[1]	BOOL	Loss of communications to safety control
SafetyTorqueOffFault	[3]	BOOL	Status of SI.SafetyFault

(1) Bits not shown are always zero.

Explicit Messages

You can use explicit messages to obtain additional diagnostic information from the safety controller by using an MSG instruction.

Safety Supervisor State

The safety supervisor state provides information on the state of the integrated safety connection and the mode of operation. There is only one safety supervisor object per drive module. Therefore, for dual-axis inverters, the safety supervisor is the same on both axes.

Table 157 - Safety Supervisor State: MSG

Parameter	Value	Description
Service Code	0x0E	Get attribute single
Class	0x39	Safety supervisor
Instance	1	
Attribute	0x0B	Device status
Data Type	SINT	Short integer

Table 158 - Safety Supervisor States

Value	Safety Supervisor State	Definition	Safety Mode
2	Configured (no safety connection)	No active connections	Integrated
4	Running	Normal running state	Integrated
7	Configuring	Transition state	Integrated
8	Not Configured	Hardwired STO mode with torque disabled	Hardwired (out of the box)
51	Not Configured (torque permitted)	Hardwired STO mode with torque permitted	Hardwired (out of the box)
52	Running (torque permitted)	STO bypass state	Integrated

Safe Torque-off Mode

You can use the attribute STO Mode to check if the Kinetix 5700 inverter is in STO Bypass mode.

Table 159 - Safe Torque-off Mode: MSG

Parameter	Value	Description
Service Code	0x0E	Get attribute single
Class	0x5A	Safety stop functions
Instance	1 or 2	Inverter axis number
Attribute	0x104	STO mode
Data Type	SINT	Short integer

Table 160 - Safe Torque-off Mode: Values

Value	Definition
1	Normal operation
2	STO bypass mode

Safe Torque-off Faults

When a safety fault is indicated in any of the following tags:

- SI.SafetyFault
- Axis.SafetyFaultStatus
- Axis.SafetyTorqueOffFault

The cause of the fault can be read using an explicit message.

Table 161 - Safe Torque-off Fault Type: MSG

Parameter	Value	Description
Service Code	0x0E	Get attribute single
Class	0x5A	Safety stop functions
Instance	1 or 2	Inverter axis number
Attribute	0x108	STO fault type
Data Type	SINT	Short integer

Table 162 - Safe Torque-off Fault Type: Values

Value	Definition
1	No Fault
3	Circuit Error
104	Hardwired input in Network mode

Hardwired Safe Torque-off

This section introduces you to the Kinetix 5700 hardwired safe torque-off (STO) feature that meets the requirements of Performance Level e (PL e) per ISO 13849-1 and SIL CL 3 per IEC 61508, IEC 61800-5-2 and IEC 62061.

The 2198-*xxxx*-ERS3 and 2198-*xxxx*-ERS4 inverters use the STO connector for wiring external safety devices and cascading hardwired safety connections from drive-to-drive.

Compatible Controllers

A ControlLogix® 5570, ControlLogix 5580, CompactLogix™ 5370 or CompactLogix 5380 controller is required for drive control.

The Studio 5000 Logix Designer® application provides support for programming, commissioning, and maintaining these CompactLogix and ControlLogix controllers with Kinetix 5700 drive systems.

Table 163 - Studio 5000 Logix Designer Requirements

Studio 5000 Logix Designer Application	Kinetix Dual-axis Inverters Cat. No.	Kinetix Single-axis Inverters Cat. No.
Version 26 or later	2198-D*xxx*-ERS3 (series A)	2198-S*xxx*-ERS3 (series A)
Version 31 or later	2198-D*xxx*-ERS4 2198-D*xxx*-ERS3 (series B)	2198-S*xxx*-ERS4 2198-S*xxx*-ERS3 (series B)

Description of Operation

The safe torque-off feature provides a method, with sufficiently low probability of failure, to force the power-transistor control signals to a disabled state. When disabled, or any time power is removed from the safety enable inputs, all of the drive output-power transistors are released from the ON-state. This results in a condition where the drive performs a Category 0 Stop (refer to Stop Category Definition on page 304). Disabling the power transistor output does not provide physical isolation of the electrical output that is required for some applications.

For hardwired control of the safe torque-off (STO) function:

- The STO function needs to be in Hardwired STO mode
- The appropriate wiring must be connected to the Safety (STO) connector plug

Refer to Hardwired Safe Torque-off Electrical Specifications on page 322 for more information on the safety inputs.

Under normal operation, the safe torque-off inputs are energized. If either of the safety enable inputs are de-energized, then all of the output power transistors turn off. The safe torque-off response time is less than 12 ms.

ATTENTION: Permanent magnet motors can, in the event of two simultaneous faults in the IGBT circuit, result in a rotation of up to 180 electrical degrees.

ATTENTION: If any of the safety enable inputs de-energize, the Start Inhibit field indicates the SafeTorqueOffInhibit and GuardStopRequestStatus bits of the AxisGuardStatus tag are set to 1.

Figure 134 - Normal System Operation

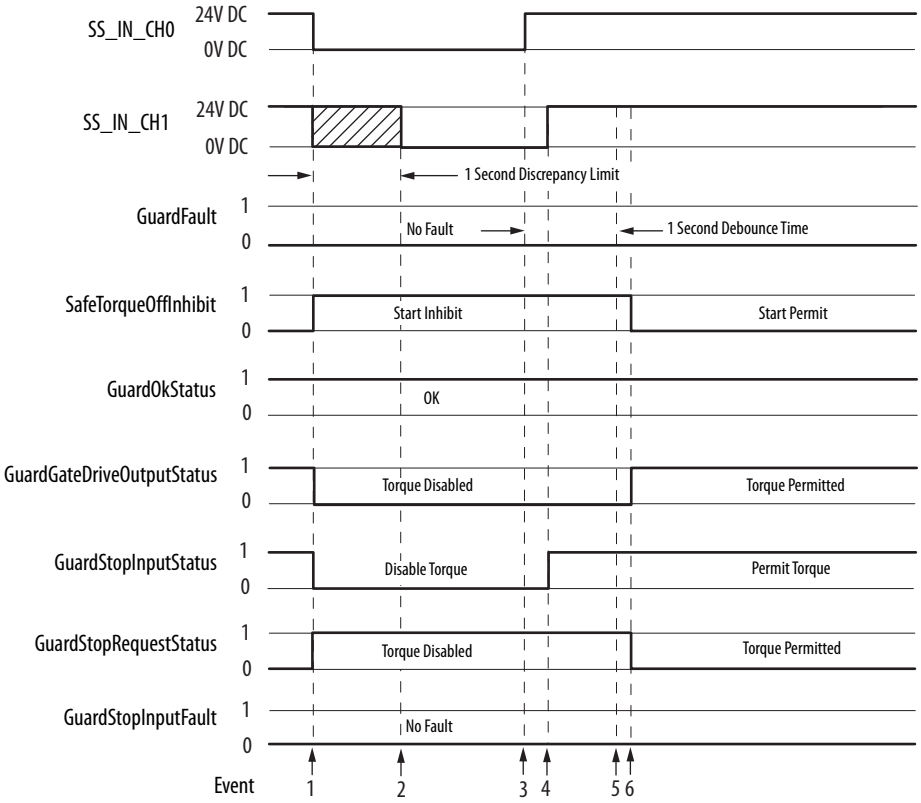

Table 164 - Normal System Operation Legend

Event	Description
1	At least one input is switched-off. The GuardStopRequestStatus bit is set to 1.
2	Second input is switched off. If both STO inputs are not in the OFF state simultaneously within 100 ms or after 1 second, then GuardStopInputFault is posted.
3	First input is switched-on.
4	Second input is switched-on within 1 second of event 3.
5	Both inputs are in the ON state simultaneously within 1 second. As a result, GuardStopInputFault is not posted.
6	The GuardStopRequestStatus bit sets back to 0 if event 4 occurs within a 100 ms interval after event 3. If event 4 is outside of the 100 ms interval, but within the a 1 second interval after event 3, then the GuardStop RequestStatus bit sets back to 0 after the 1 second interval following event 3 (not immediately following event 4).

Troubleshoot the Safe Torque-off Function

For Kinetix 5700 fault code descriptions and possible solutions, see the Knowledgebase Technote: Kinetix 5700 Servo Drives Fault Codes. You can download the spreadsheet from this public article.

You will be asked to log in to your Rockwell Automation web account or create an account if you do not have one. You do not need a support contract to access this article.

IMPORTANT If both STO inputs are not in the OFF state simultaneously within 100 ms or after 1 second, then GuardStopInputFault is posted.

Figure 135 illustrates when the safe torque-off mismatch is detected and GuardStopInputFault is posted.

Figure 135 - System Operation in the Event of STO Inputs Discrepancy (fault case 1)

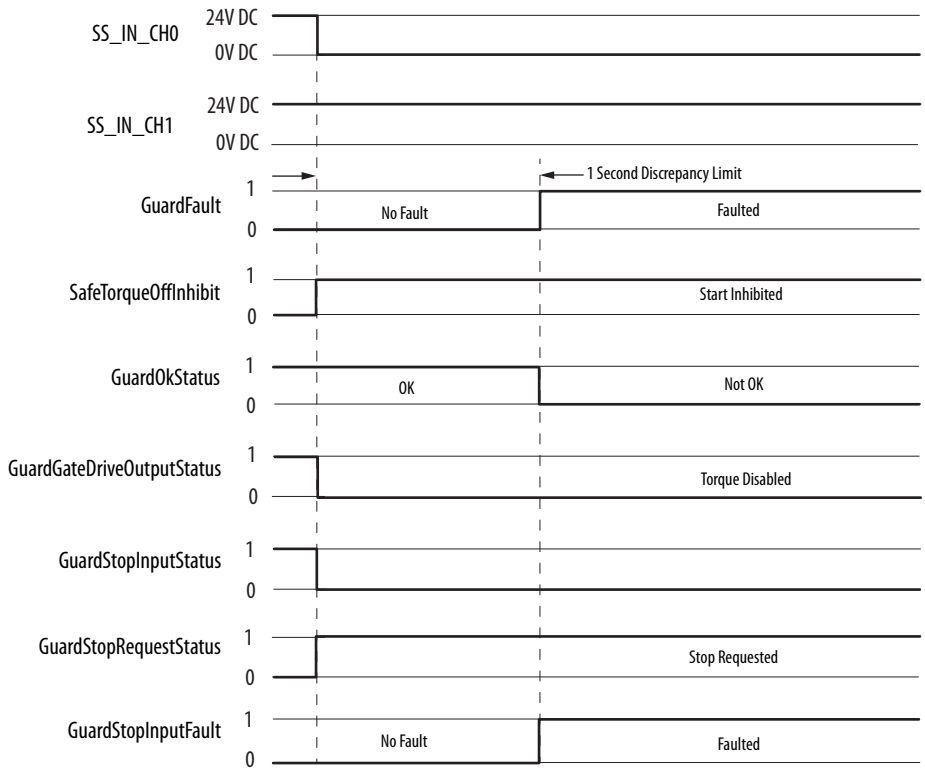

When one safety input is turned off, the second input must also be turned off, otherwise a fault is asserted (see Figure 136). The fault is asserted even if the first safety input is turned on again, without the second input transitioning to the ON state.

Figure 136 - System Operation in the Event of STO Inputs Discrepancy (fault case 2)

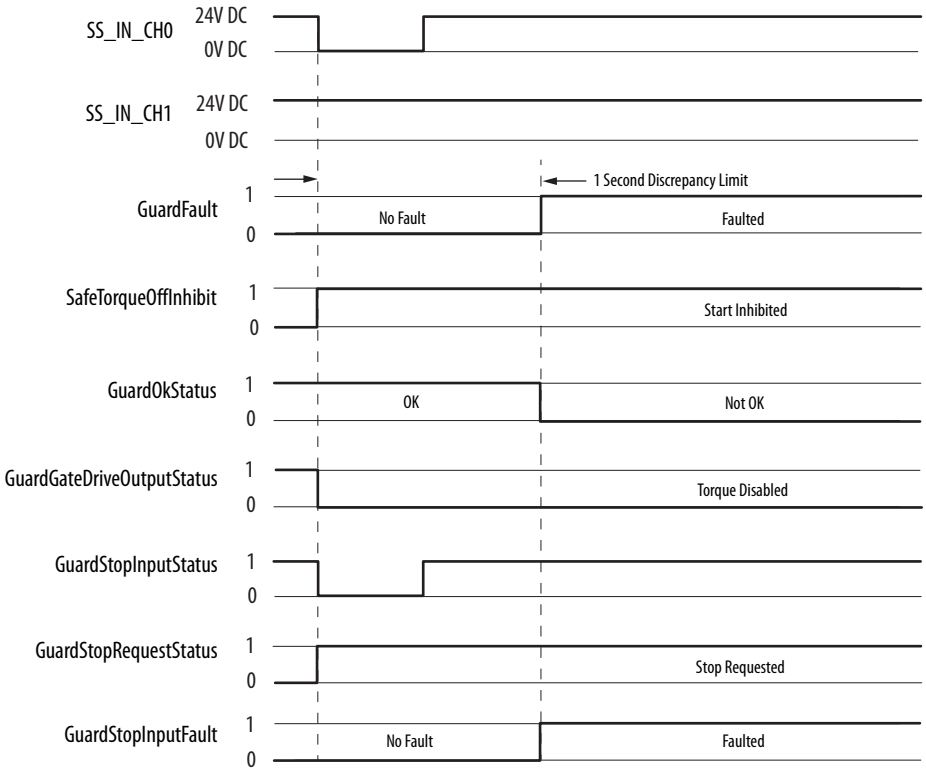

Figure 137 - System Operation in the Event of STO Inputs Discrepancy (fault case 3)

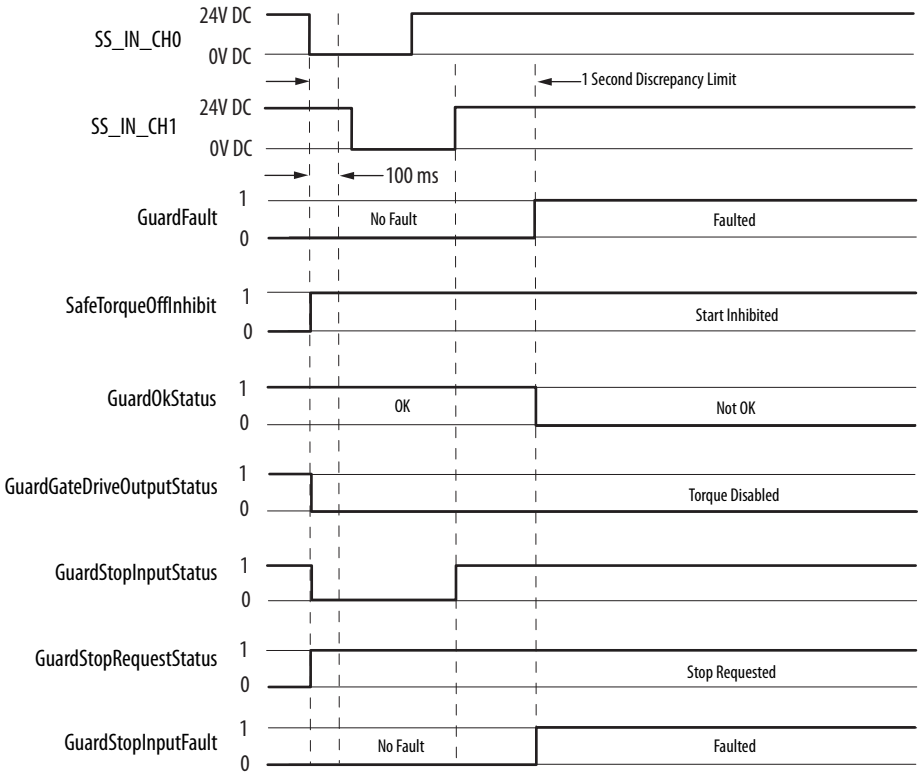

ATTENTION: The safe torque-off fault is detected upon demand of the safe torque-off function. After troubleshooting the STO function or performing maintenance that might affect the STO function, the STO function must be executed to verify correct operation.

IMPORTANT The GuardStopInputFault can be reset only if both inputs are in the OFF-state for more than 1 second. After the fault reset requirement is satisfied, an MAFR command in the Logix Designer application must be issued to reset the GuardStopInputFault.

Safe Torque-off Connector Data

Two rows of eight pins are provided for making drive-to-drive connections. The dual-axis inverters have pins designated for axis A and axis B. The single-axis inverters do not use STO-6, -7, -8 and STO-14, -15, -16.

Figure 138 - Pin Orientation for 16-pin Safe Torque-off (STO) Connector

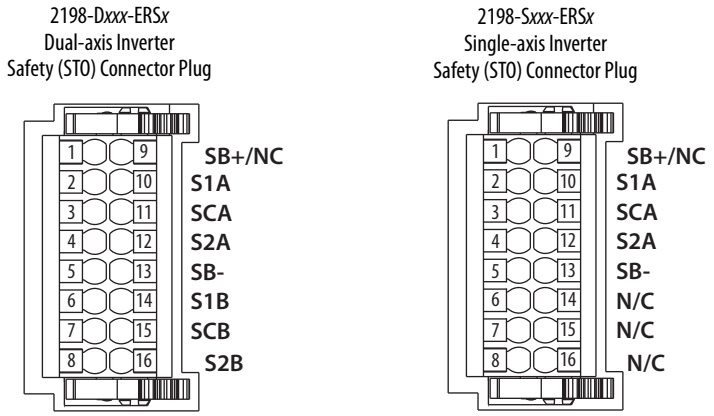

Table 165 - Safe Torque-off Connector Pinouts

STO Pin		Description 2198-D*xxx*-ERS*x*	Description 2198-S*xxx*-ERS*x*	Signal
1		Safety bypass plus signal. Connect to both safety inputs to disable safe torque-off function.		SB+
2	10	Safe stop input channel 1, axis A.		S1A
3	11	Safe stop input common, axis A.		SCA
4	12	Safe stop input channel 2, axis A.		S2A
5	13	Safety bypass minus signal. Connect to safety common to disable safe torque-off function.		SB-
6	14	Safe stop input channel 1, axis B.	N/C	S1B
7	15	Safe stop input common, axis B.	N/C	SCB
8	16	Safe stop input channel 2, axis B.	N/C	S2B
9		N/C	N/C	–

IMPORTANT STO-3 and STO-7 is common for the digital inputs, the safety inputs, and the encoder power supply (optional).

Wire the Safe Torque-off Circuit

This section provides guidelines for wiring safe torque-off connections to your Kinetix 5700 drive.

IMPORTANT When replacing 2198-*xxxx*-ERS3 (series A) single-axis and dual-axis inverters with 2198-*xxxx*-ERS*x* (series B) inverters, you must use the series B (safety) connector plugs that are included with your series B inverter.

Install 2198-xxxx-ERS3 (series A) Safety (STO) Connector Plugs

The right side of the safety connector plug requires an off-center push when inserting it into the STO connector. This applies to 2198-*xxxx*-ERS3 (series A) single-axis and dual-axis inverters.

IMPORTANT An off-center push is required to engage the locking features on the bottom of the safety connector plugs and seat properly with the drive STO connector. Failure to do this can result in the connector plug pulling out of the drive connector during normal operation.

Figure 139 - Insert the 2198-*xxxx*-ERS3 (series A) Safety Connector Plug

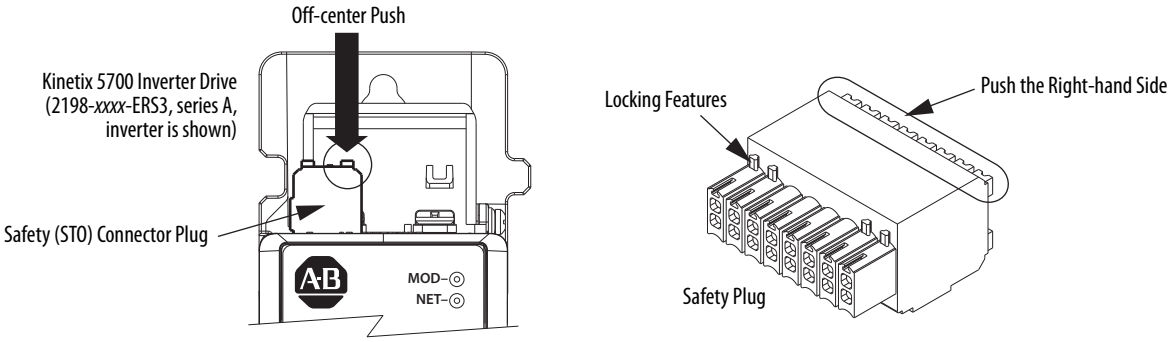

Install 2198-xxxx-ERS4 and 2198-xxxx-ERS3 (series B) Safety Connector Plugs

The safety connector plugs have two locking leavers that you push in a clockwise direction as you insert the plugs into the drive connector. This is the locked position. Rotate the leavers counter-clockwise to the open position to release the connector plugs. This applies to 2198-*xxxx*-ERS4 and 2198-*xxxx*-ERS3 (series B) single-axis and dual-axis inverters.

IMPORTANT Push the locking leavers clockwise into the locked position as you insert the STO connector plugs. Failure to do this can result in the connector plugs pulling out of the drive connector during normal operation.

Figure 140 - Insert the 2198-*xxxx*-ERS4 and 2198-*xxxx*-ERS3 (series B) Safety Connector Plugs

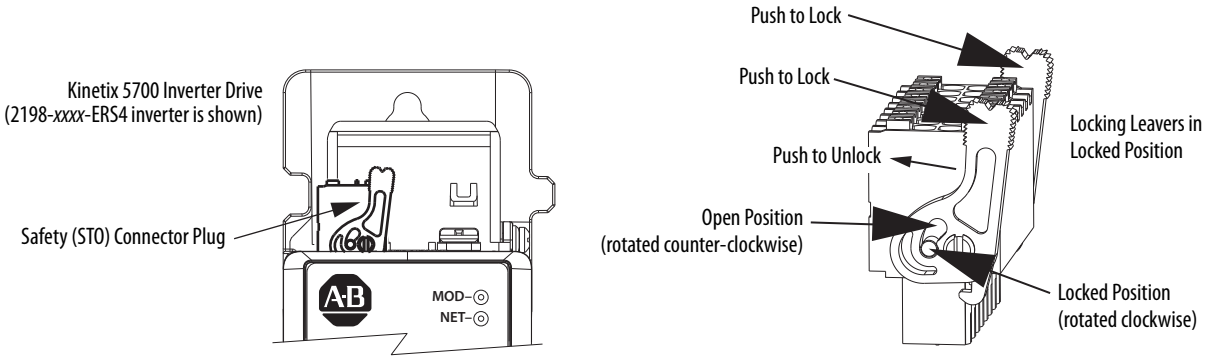

IMPORTANT The National Electrical Code and local electrical codes take precedence over the values and methods provided.

IMPORTANT To improve system performance, run wires and cables in the wireways as established in Establish Noise Zones beginning on page 68.

IMPORTANT Pins STO-1 and STO-5 (SB+ and SB-) are used to disable the safe torque-off function. When wiring to the STO connector, use an external 24V supply for the external safety device that triggers the safe torque-off request. To avoid jeopardizing system performance, do not use pin STO-1 as a power supply for the external safety device.

Safe Torque-off Wiring Requirements

The safe torque-off (STO) connector uses spring tension to secure the wire. Depress the numbered tab along side each pin to insert or release each wire. Two rows of pins are provided for drive-to-drive connections. Wire must be copper with 75 °C (167 °F) minimum rating.

IMPORTANT The National Electrical Code and local electrical codes take precedence over the values and methods provided.

IMPORTANT Stranded wires must terminate with ferrules to prevent short circuits, per table D7 of ISO 13849.

Figure 141 - Safe Torque-off (STO) Terminal Plug

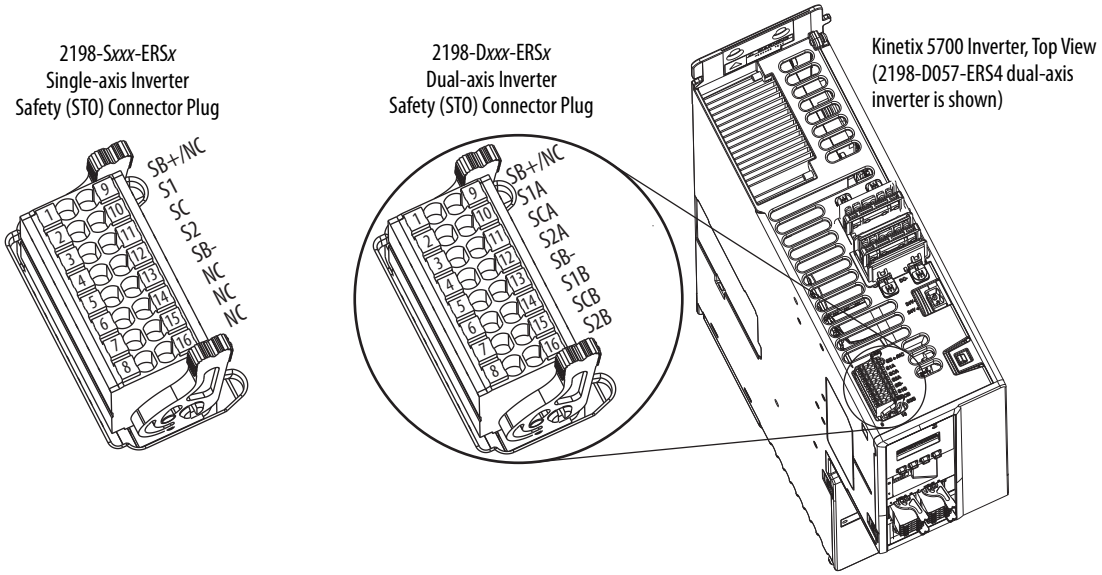

Table 166 - Safe Torque-off (STO) Connector Plug Wiring

Safe Torque-off (STO) Connector		Signal		Recommended Wire Size mm^2 (AWG)	Strip Length mm (in.)	Torque Value N•m (lb•in)
STO Pin		2198-Dxxx-ERSx	2198-Sxxx-ERSx			
1		SB+	SB+	0.14…1.5 (26…16)	10 (0.39)	N/A (1)
2	10	S1A	S1			
3	11	SCA	SC			
4	12	S2A	S2			
5	13	SB-	SB-			
6	14	S1B	NC			
7	15	SCB	NC			
8	16	S2B	NC			
9		NC	NC			

(1) This connector uses spring tension to hold wires in place.

Safe Torque-off Feature Bypass

The Kinetix 5700 inverters do not operate without a safety circuit or safety bypass wiring. For applications that do not require the safe torque-off feature you must install jumper wires to bypass the safe torque-off circuitry.

Kinetix 5700 inverters ship with a 16-pin wiring plug for wiring to safety devices. To bypass the safety function, wire these signals as shown in Figure 142. With the jumper wires installed, the safe-off feature is not used.

Figure 142 - Safe Torque-off Bypass Wiring

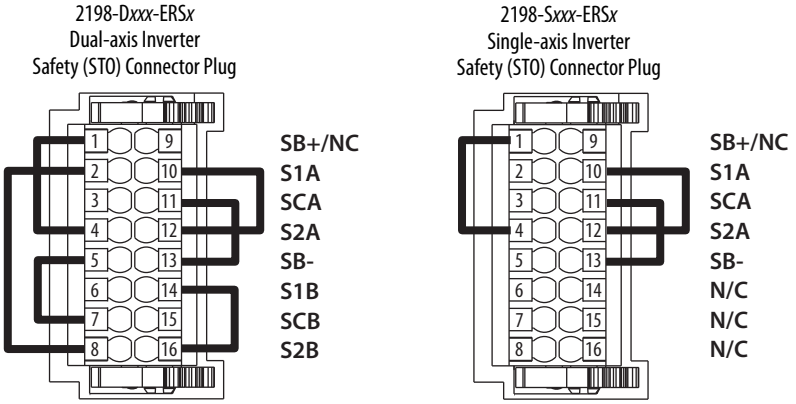

IMPORTANT If the safe torque-off function is not required, the drive safety configuration must be returned to Hardwired STO mode and the bypass jumper wires applied to the safety (STO) connector plugs.

Cascade the Safe Torque-off Signal

The total number of drives in a single cascaded safety circuit is limited by the current carrying capacity of the cascaded safety wiring. Refer to Table 167 for current rating per channel, per drive.

In this example, the cascaded safe torque-off (STO) wiring is for an application with three single-axis inverters and a single safety device.

Figure 143 - Cascaded STO Wiring - Single-axis Inverters

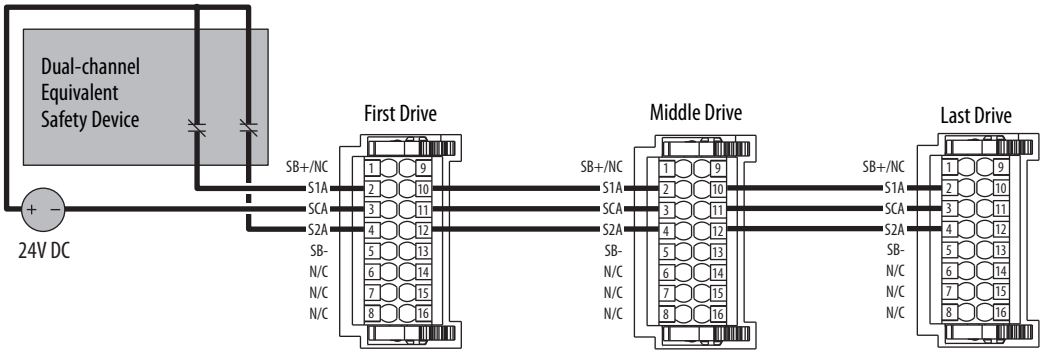

In this example, the cascaded safe torque-off (STO) wiring is for an application with three dual-axis inverters and two separate safety devices.

Figure 144 - Cascaded STO Wiring - Dual-axis Inverters with Two Safety Devices

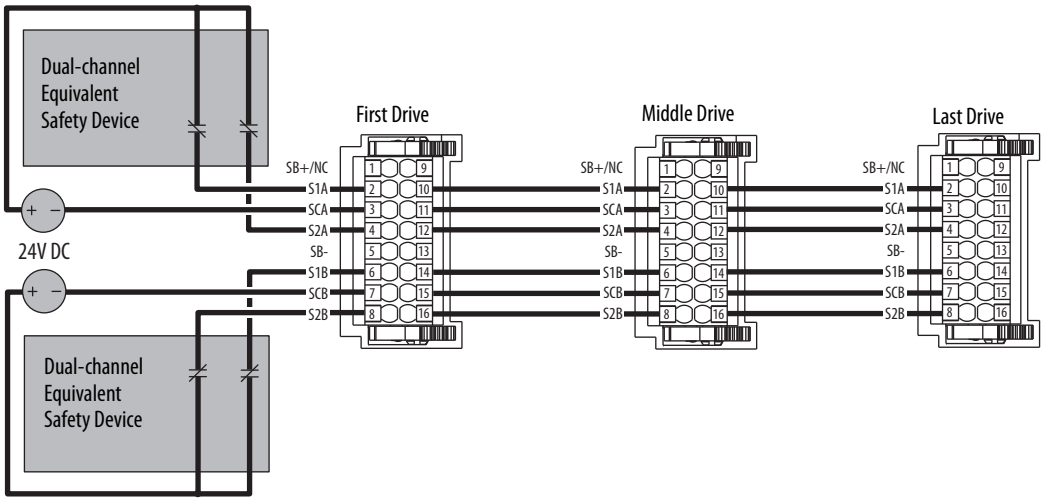

In this example, the cascaded STO wiring is for an application with three dual-axis inverters and a single safety device for all axes.

Figure 145 - Cascaded STO Wiring - Dual-axis Inverter with Single Safety Device

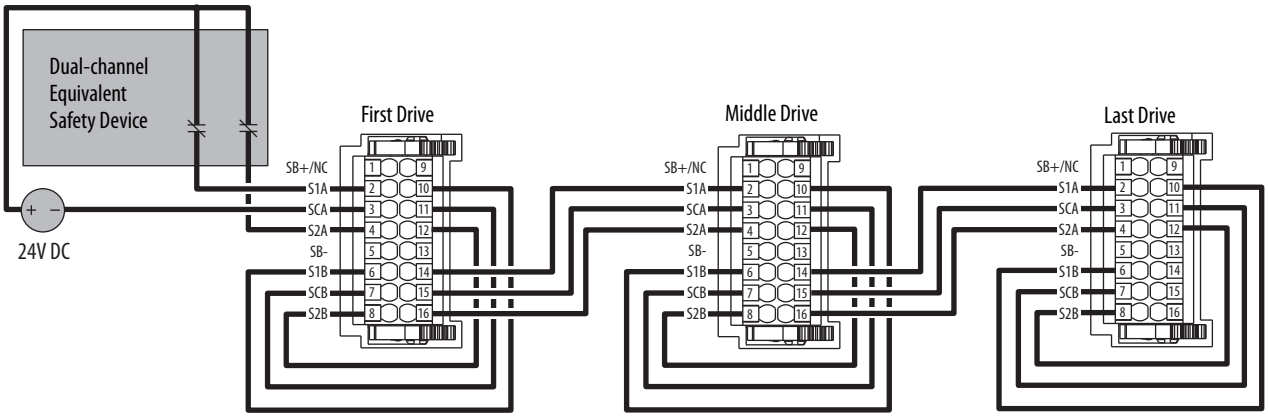

Hardwired Safe Torque-off Electrical Specifications

IMPORTANT To maintain their safety rating, Kinetix 5700 inverters must be installed inside protected control panels or cabinets appropriate for the environmental conditions of the industrial location. The protection class of the panel or cabinet must be IP54 or higher.

Table 167 - Hardwired STO Electrical Specifications

Attribute		Value
Safety inputs (per channel)	Input current	< 10 mA
	Input ON voltage range	18…26.4V DC
	Input OFF voltage, max	5V DC
	Input ON current, per input, max	10 mA, each drive (2)
	Input OFF current, max (@ V in < 5V DC)	2 mA
	Pulse rejection width	700 µs
	External power supply (1)	SELV/PELV
	Input type	Optically isolated and reverse voltage protected

(1) SELV or PELV rated power supplies must be used to energize external safety devices connected to the Kinetix 5700 safety inputs.
(2) The maximum number of drives cascaded with safe torque-off wiring is 50.

For additional information regarding Allen-Bradley® safety products, including safety relays, light curtain, and gate interlock applications, refer to https://ab.rockwellautomation.com/Safety.

Integrated Safe Torque-off

This section introduces you to the Kinetix 5700 safe torque-off (STO) feature over the EtherNet/IP network that meets the requirements of Performance Level e (PL e) per ISO 13849-1 and SIL 3 per IEC 61508, IEC 61800-5-2, and IEC 62061. Integrated STO applies to 2198-*xxxx*-ERS3 and 2198-*xxxx*-ERS4 dual-axis and single-axis inverters.

In Integrated STO mode, the GuardLogix® safety controller issues the STO command over the EtherNet/IP network and the 2198-*xxxx*-ERS3 and 2198-*xxxx*-ERS4 dual-axis and single-axis inverters execute the STO command.

Compatible Safety Controllers

A GuardLogix 5570 or Compact GuardLogix 5370 safety controller is required for integrated safety control of the Kinetix 5700 safe torque-off function.

The Studio 5000 Logix Designer application, version 26.00 or later, provides support for programming, commissioning, and maintaining Logix 5000™ safety controllers with Kinetix 5700 drive systems.

The safety connection can originate from either of these controller configurations:

- Single safety controller that provides both safety and motion control
- Safety controller that controls only the safety, while a separate ControlLogix 5570, ControlLogix 5580, CompactLogix 5370, or CompactLogix 5380 controller that controls motion

Table 168 - Studio 5000 Logix Designer Requirements

Studio 5000 Logix Designer Application	Kinetix Dual-axis Inverters Cat. No.	Kinetix Single-axis Inverters Cat. No.
Version 26 or later	2198-D*xxx*-ERS3 (series A)	2198-S*xxx*-ERS3 (series A)
Version 31 or later	2198-D*xxx*-ERS4 2198-D*xxx*-ERS3 (series B) (1)	2198-S*xxx*-ERS4 2198-S*xxx*-ERS3 (series B)

(1) When 2198 -*xxxx*-ERS3 (series B) drives are used in Timed SS1 safety applications, Studio 5000 Logix Designer application, version 31, must be used.

Safety Application Requirements

Safety application requirements include evaluating probability of failure rates (PFH), system reaction time settings, and functional verification tests that fulfill SIL 3 criteria. Refer to Average Frequency of a Dangerous Failure on page 305 for more PFH information.

Creating, recording, and verifying the safety signature is also a required part of the safety application development process. Safety signatures are created by the safety controller. The safety signature consists of an identification number, date, and time that uniquely identifies the safety portion of a project. This includes all safety logic, data, and safety I/O configuration.

For safety system requirements, including information on the safety network number (SNN), verifying the safety signature, and functional verification tests refer to the appropriate GuardLogix controller publication as defined in Additional Resources on page 13.

IMPORTANT You must read, understand, and fulfill the requirements detailed in the GuardLogix controller systems safety reference manual prior to operating a safety system that uses a GuardLogix controller and Kinetix 5700 drive.

Description of Operation

The safe torque-off (STO) feature provides a method, with sufficiently low probability of failure, to force the power-transistor control signals to a disabled state. When the command to execute the STO function is received from the GuardLogix controller, all of the drive output-power transistors are released from the ON-state. This results in a condition where the motor is coasting. Disabling the power transistor output does not provide isolation of the electrical output that is required for some applications.

These conditions must be met for integrated control of the STO function:

- The Kinetix 5700 drive module must be added to the GuardLogix 5570 or Compact GuardLogix 5370 controller I/O Configuration.
- The module must be configured for Safety Only or Motion and Safety connections
- The safety bypass jumper wires must be removed.

IMPORTANT If the STO bypass jumper wires were applied during machine commissioning or maintenance, they must be removed before the drive will operate in Integrated STO mode.

The Kinetix 5700 drive STO function reaction time is less than 10 ms. Reaction time for the drive is the delay between the time the drive STO command receives the CIP Safety™ packet with an STO request and the time when motion producing power is removed from the motor.

Table 169 - Safe Torque-off Network Specifications

Attribute	2198-*xxxx*-ERS3	2198-*xxxx*-ERS4
STO function reaction time	10 ms, max	
Safety connection RPI, min	6 ms	
Input assembly connections (1)	3	1
Output assembly connections (1)	1	
Integrated safety open request support	Type 1 and Type 2 requests	

(1) Motion and Safety and Safety Only connections with the inverter uses 1 input assembly connection and 1 output assembly connection.

Safe Torque-off Assembly Tags

In Integrated safe torque-off (STO) mode, a GuardLogix 5570 or Compact GuardLogix 5370 safety controller commands the Kinetix 5700 safe torque-off function through the appropriate tag in the safety output assembly.

IMPORTANT The tag names listed in Table 170 changed in the Logix Designer application, version 31 and later, depending on how Motion Safety is configured in the Module Definition.

Table 170 - STO Tag Name Changes in the Logix Designer Application

STO Tag Names Studio 5000 Logix Designer (version 30 and earlier)	STO Only Tag Names Studio 5000 Logix Designer (version 31 and later)	Safe Stop Only - No Feedback Tag Names Studio 5000 Logix Designer (version 31 and later)
SO.SafeTorqueOff	SO.SafeTorqueOff	SO.STOOutput
SO.Reset	SO.Reset	SO.ResetRequest

The SO.Command tags are sent from the GuardLogix safety output assembly to the Kinetix 5700 safety output assembly to control the safe torque-off function.

The SI.Status tags are sent from the Kinetix 5700 inverter to the GuardLogix safety input assembly and indicate the Kinetix 5700 safety control status.

The SI.ConnectionStatus tags indicate the safety input connection status.

Table 171 and Table 172 list the safety tags added to the controller tags when a Kinetix 5700 servo drive is added to a GuardLogix I/O Configuration and the connection is configured for Motion and Safety or Safety Only.

IMPORTANT The SO.SafeTorqueOff and SO.ResetRequest tag names change when Motion Safety in the Module Definition is configured as Safe Stop Only - No Feedback.

The attribute values listed are the Assembly Object attribute values.

Table 171 - Single-axis Inverter Integrated STO Specifications

Logix Designer Tag Name	Safe Stop Only - No Feedback Tag Names Studio 5000 Logix Designer (version 31 and later)	Attribute [bit]	Type	Description
SI.ConnectionStatus (1) (2)			DINT	
SI.RunMode		[0]	BOOL	Combinations of the RunMode and ConnectionFaulted states
SI.ConnectionFault		[1]	BOOL	
SI.Status (1) (3)			SINT	
SI.TorqueDisabled		[0]	BOOL	0 = Torque Permitted 1 = Torque Disabled
SI.SafetyFault		[6]	BOOL	1 = STO fault present
SI.ResetRequired		[7]	BOOL	1 = Reset is required
SO.Command (1) (4)			SINT	
SO.SafeTorqueOff	SO.STOOutput	[0]	BOOL	0 = Disable Permit 1 = Permit Torque
SO.Reset	SO.ResetRequest	[7]	BOOL	0 --> 1 = Reset STO fault

(1) Bits not listed are always zero.
(2) ConnectionStatus is determined by the Safety Validator in the GuardLogix controller.
(3) Status is sent from the drive to the controller using integrated safety protocol.
(4) Commands are sent from the controller to the drive using integrated safety protocol.

IMPORTANT Only the data listed in Table 171 is communicated with SIL 3 integrity.

Table 172 - Dual-axis Inverter Integrated STO Specifications

Logix Designer Tag Name	Safe Stop Only - No Feedback Tag Names Studio 5000 Logix Designer (version 31 and later)	Attribute [bit]	Type	Description
SI.ConnectionStatus (1) (2)			DINT	
SI.RunMode		[0]	BOOL	Combinations of the RunMode and
SI.ConnectionFaulted		[1]	BOOL	ConnectionFaulted states
SI.Status1 (1) (3)			SINT	**Motion Safety 1**
SI.TorqueDisabled1		[0]	BOOL	0 = Torque Permitted; 1 = Torque Disabled
SI.SafetyFault1		[6]	BOOL	1 = STO Fault present
SI.ResetRequired1		[7]	BOOL	1 = A reset is required
SI.Status2 (1) (3)			SINT	**Motion Safety 2**
SI.TorqueDisabled2		[0]	BOOL	0 = Torque Permitted; 1 = Torque Disabled
SI.SafetyFault2		[6]	BOOL	1 = STO Fault present
SI.ResetRequired2		[7]	BOOL	1 = A reset is required
SO.Command1 (1) (4)			SINT	**Motion Safety 1**
SO.SafeTorqueOff1	SO.STOOutput1	[0]	BOOL	0 = Disable Permit; 1 = Permit Torque
SO.Reset1	SO.ResetRequest1	[7]	BOOL	0-->1 = Reset STO Fault
SO.Command2 (1) (4)			SINT	**Motion Safety 2**
SO.SafeTorqueOff2	SO.STOOutput2	[0]	BOOL	0 = Disable Permit; 1 = Permit Torque
SO.Reset2	SO.ResetRequest2	[7]	BOOL	0-->1 = Reset STO Fault

(1) Bits not listed are always zero.
(2) ConnectionStatus is determined by the Safety Validator in the GuardLogix controller.
(3) Status is sent from the drive to the controller using integrated safety protocol.
(4) The Command is sent from the controller to the drive using integrated safety protocol.

IMPORTANT Only the data listed in Table 172 is communicated with SIL 3 integrity.

In these examples, the appropriate STO bit permits torque when the bit is high (see Table 170 on page 325 for changes in STO tag names).

Figure 146 - STO Function (Logix Designer, version 30 or earlier)

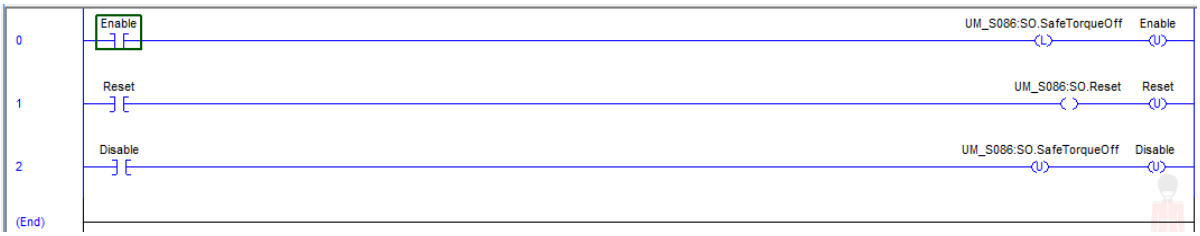

Figure 147 - STO Function with STO Only (Logix Designer, version 31 or later)

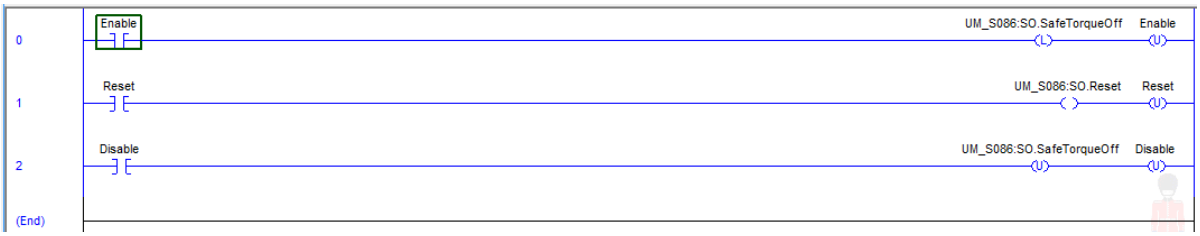

Figure 148 - STO Function with Safe Stop Only-No Feedback (Logix Designer, version 31 or later)

STO Fault Reset

To clear the STO Fault condition, a transition from logic 0 to 1 of the SO.Reset tag is required after the SO.SafeTorqueOff tag has transitioned from logic 0 to 1 (see Table 170 on page 325 for changes in STO tag names).

If the Kinetix 5700 servo drive safety controller detects a fault, the input assembly tag SI.SafetyFault is set to 1.

To reset Axis.SafetyFault, an MAFR command must be issued.

IMPORTANT	Transition of the SO.SafeTorqueOff tag to logic 1 must always be executed prior to transition of the SO.Reset tag to logic 1.

IMPORTANT	All Kinetix 5700 inverter axes enter the faulted state if any STO function fault is detected. Refer to Table on page 329 for integrated safety troubleshooting.

Refer to Figure 149 for an understanding of the Kinetix 5700 STO state restart functionality.

Figure 149 - Reset Safe Torque-off Fault Diagram

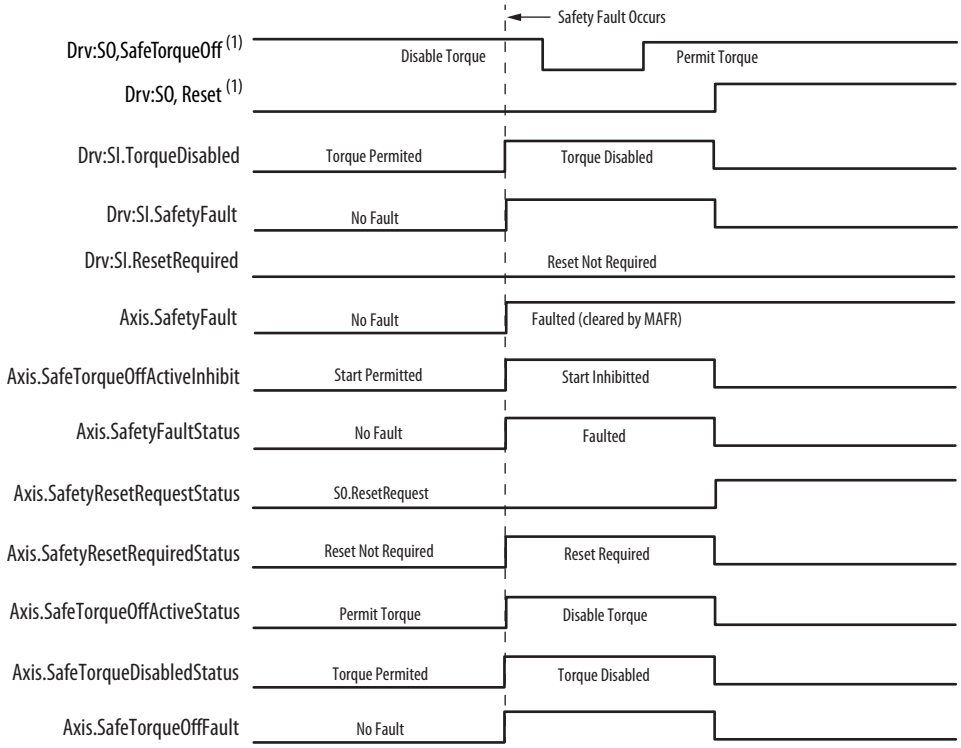

(1) See Table 170 on page 325 for STO tag name changes.

Troubleshoot the Safe Torque-off Function

For Kinetix 5700 fault code descriptions and possible solutions, see the Knowledgebase Technote: Kinetix 5700 Servo Drives Fault Codes. You can download the spreadsheet from this public article.

You will be asked to log in to your Rockwell Automation web account or create an account if you do not have one. You do not need a support contract to access this article.

Understand Integrated Safety Drive Replacement

GuardLogix controllers retain I/O device configuration on-board and are able to download the configuration to the replacement device.

IMPORTANT If the Kinetix 5700 replacement drive was used previously, clear the existing configuration before installing it on a safety network by resetting the drive to Hardwired STO mode. To see how this is done, refer to Restore the Hardwired STO Mode by Using the Logix Designer Application on page 307.

Replacing a Kinetix 5700 servo drive that sits on an integrated safety network is more complicated than replacing standard devices because of the safety network number (SNN). The device number and SNN make up the safety device's DeviceID. Safety devices require this more complex identifier to make sure that duplicate device numbers do not compromise communication between the correct safety devices. The SNN is also used to provide integrity on the initial download to the Kinetix 5700 servo drive.

When the Logix Designer application is online, the Safety category of the Module Properties dialog box displays the current configuration ownership. When the opened project owns the configuration, Local is displayed.

Configuration Ownership: Local

A communication error is displayed if the module read fails. Refer to Replace an Integrated Safety Drive in a GuardLogix System on page 330 for integrated safety drive replacement information.

Replace an Integrated Safety Drive in a GuardLogix System

When you replace an integrated safety drive, the replacement device must be configured properly and the replacement drives operation must be user-verified.

ATTENTION: During drive replacement or functional test, the safety of the system must not rely on any portion of the affected drive.

Two options for safety drive replacement are available on the Safety category of the Controller Properties dialog box in the Logix Designer application:

- Configure Only When No Safety Signature Exists
- Configure Always

Figure 150 - Safety Drive Replacement Options

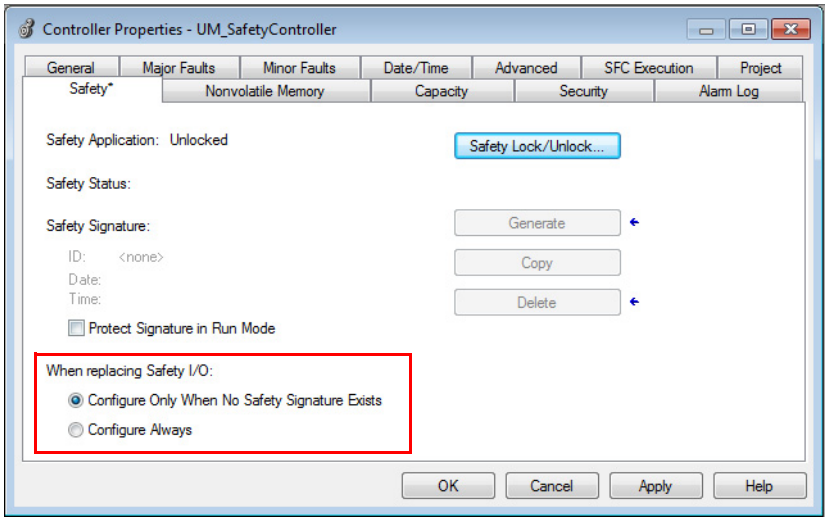

Configure Only When No Safety Signature Exists

This setting instructs the GuardLogix controller to automatically configure a safety drive only when the safety task does not have a safety task signature, and the replacement drive is in an out-of-box condition, meaning that a safety network number does not exist in the safety drive.

If the safety task has a safety task signature, the GuardLogix controller automatically configures the replacement CIP Safety I/O device only if the following is true:

- The device already has the correct safety network number.
- The device electronic keying is correct.
- The node or IP address is correct.

For detailed information, refer to Additional Resources on page 13 for the appropriate user manual for your GuardLogix or Compact GuardLogix controller.

Configure Always

When the Configure Always feature is enabled, the controller automatically checks for and connects to a replacement drive that meets all of the following requirements:

- The controller has configuration data for a compatible drive at that network address
- The drive is in Hardwired STO mode or has an SNN that matches the configuration

ATTENTION: Enable the Configure Always feature only if the entire integrated safety control system is not being relied on to maintain SIL 3 behavior during the replacement and functional testing of a Kinetix 5700 drive. Do not place drives that are in Hardwired STO mode on an integrated safety network when the Configure Always feature is enabled.

If other parts of the integrated safety control system are being relied upon to maintain SIL 3, make sure that the controller's Configure Always feature is disabled.

It is your responsibility to implement a process to make sure proper safety functionality is maintained during device replacement.

ATTENTION: Do not place any devices in the out-of-box condition on any integrated safety network when the Configure Always feature is enabled. For the device replacement procedure, refer to Additional Resources on page 13.

ATTENTION: for the appropriate user manual for your GuardLogix or Compact GuardLogix controller.

Motion Direct Commands in Motion Control Systems

You can use the Motion Direct Command (MDC) feature to initiate motion while the controller is in Program mode, independent of application code that is executed in Run mode. These commands let you perform a variety of functions, for example, move an axis, jog an axis, or home an axis.

A typical use might involve a machine integrator testing different parts of the motion system while the machine is being commissioned or a maintenance engineer, under certain restricted scenarios in accordance with safe machine operating procedures, wanting to move an axis (like a conveyor) to clear a jam before resuming normal operation.

ATTENTION: To avoid personal injury or damage to equipment, follow these rules regarding Run mode and Program mode.

- Only authorized, trained personnel with knowledge of safe machine operation should be allowed to use Motion Direct Commands
- Additional supervisory methods, like removing the controller key switch, should be used to maintain the safety integrity of the system after returning the safety controller to RUN mode

Understand STO Bypass When Using Motion Direct Commands

If a Safety-only connection between the GuardLogix safety controller and the Kinetix 5700 servo drive was established at least once after the drive was received from the factory, the drive does not allow motion while the safety controller is in Program mode by default.

This is because the safety task is not executed while the GuardLogix safety controller is in Program mode. This applies to applications running in a single-safety controller (with Motion and Safety connections). When an integrated safety drive has a Motion connection to a standard controller and a separate Safety connection to a safety controller, the standard controller can transition to Program mode while the safety controller stays in Run mode and continues to execute the safety task.

However, Kinetix 5700 drive systems are designed with a bypass feature for the STO function in single-safety controller configurations. You can use the MDC feature to allow motion while following all the necessary and prescribed steps per your machine's safety operating procedures.

ATTENTION: Consider the consequences of allowing motion through the use of MDC when the controller is in Program mode. You must acknowledge warning messages in the Logix Designer application that warn of the drive bypassing the STO function and unintended motion can occur. The integrated safety drive does not respond to requests of the STO function if MDC mode is entered.
It is your responsibility to maintain machine safety integrity while executing motion direct commands. One alternative is to provide ladder logic for Machine Maintenance mode that leaves the controller in Run mode with safety functions executing.

Logix Designer Application Warning Messages

When the controller is in Run mode, executing safety functions, the Kinetix 5700 servo drive follows the commands that it receives from the safety controller. The controller reports Safety state = Running and Axis state = Stopped/Running, as shown in Figure 151.

Figure 151 - Safety State Indications When Controller is in Run Mode (safety task executing)

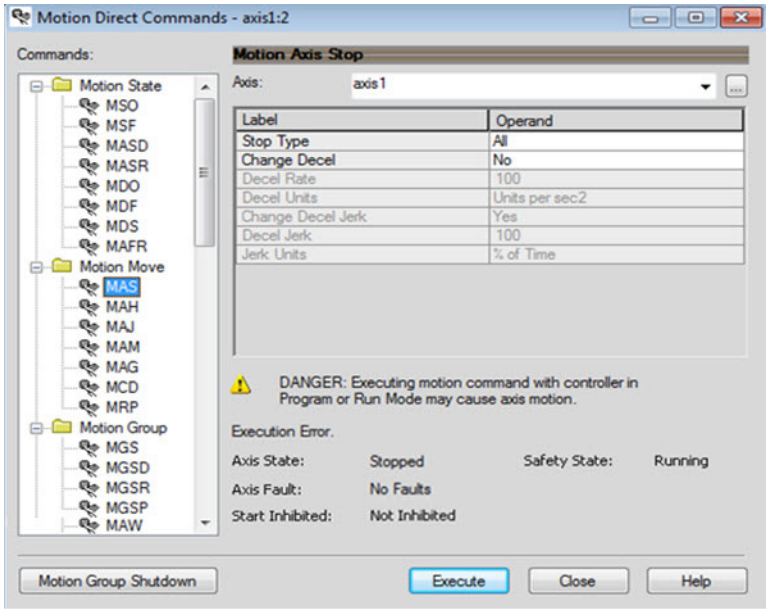

When the controller transitions to Program mode, the integrated safety drive is in the safe state (torque is not permitted). The controller reports Safety state = Not Running and Axis state = Start Inhibited, as shown in Figure 152).

Figure 152 - Safety State Indications After Controller Transitions to Program Mode

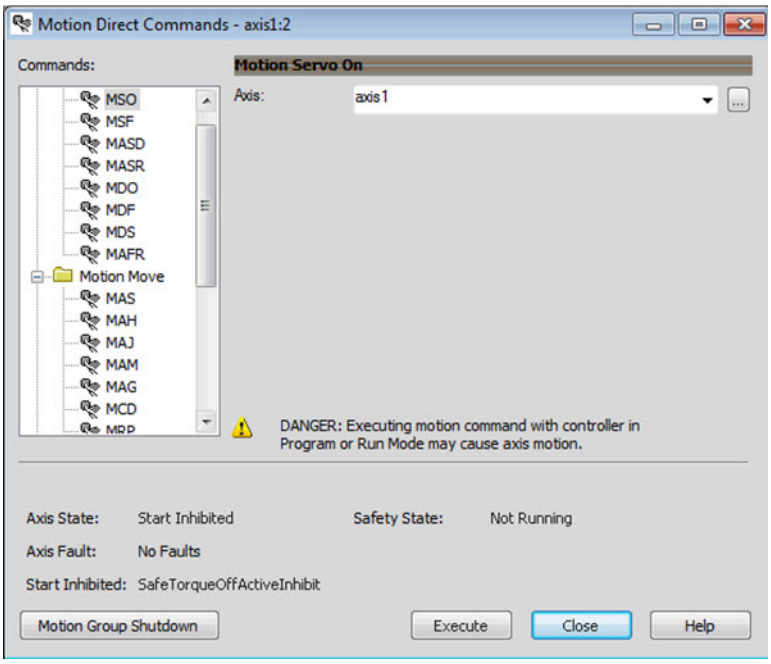

When you issue a motion direct command to an axis to produce torque in Program mode, for example MSO or MDS, with the safety connection present to the drive, a warning message is presented before the motion direct command is executed, as shown in Figure 153.

Figure 153 - STO Bypass Prompt When the Safety Controller is in Program Mode

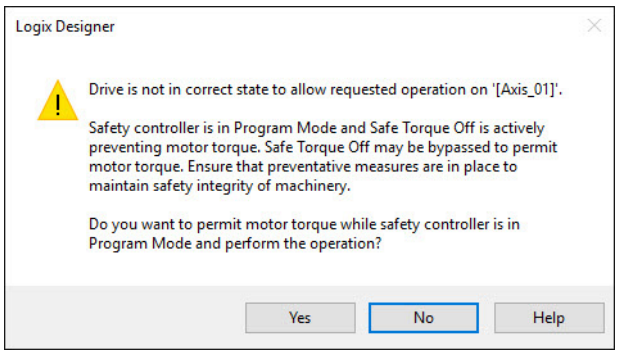

ATTENTION: Unexpected motion and the possibility of personal injury or equipment damage exists if a motion direct command is issued for one axis of any 2198-D*xxx*-ERS3 dual-axis inverter. Both (A and B) inverters associated with the physical drive permit torque after you acknowledge this warning message by clicking Yes. Make sure that preventive measures are in place for both axes to maintain the safety integrity of the machine.

IMPORTANT The warning in Figure 153 is displayed only the first time a motion direct command is issued.

After you acknowledge the warning message by clicking Yes, torque is permitted by the drive and a warning message is indicated in the software as shown in Figure 154. The controller reports Safety state = Not Running (torque permitted), Axis state = Stopped/Running and Persistent Warning = Safe Torque Off Bypassed.

IMPORTANT Switch the controller to Run mode to exit Motion Direct Command mode and end the STO function bypass.

Figure 154 - Safety State Indications After Controller Transitions to Program Mode (MDC executing)

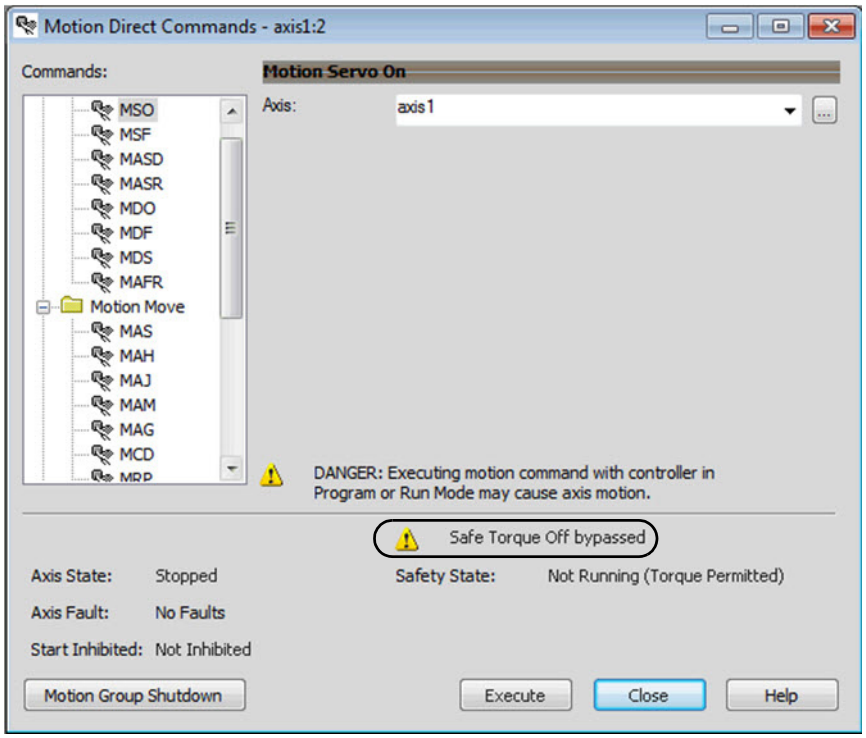

IMPORTANT The persistent warning message text Safe Torque Off bypassed appears when a motion direct command is executed.

The warning message persists even after the dialog is closed and reopened as long as the integrated safety drive is in STO Bypass mode.

The persistent warning message is removed only after the integrated safety drive's Safety State is restored to the Running state.

Torque Permitted in a Multi-workstation Environment

The warning in Figure 155 is displayed to notify a second user working in a multi-workstation environment that the first user has placed the integrated safety drive in the STO state and that the current action is about to bypass the STO state and permit torque.

Figure 155 - STO Bypass Prompt When MDC is Issued in Multi-workstation Environment

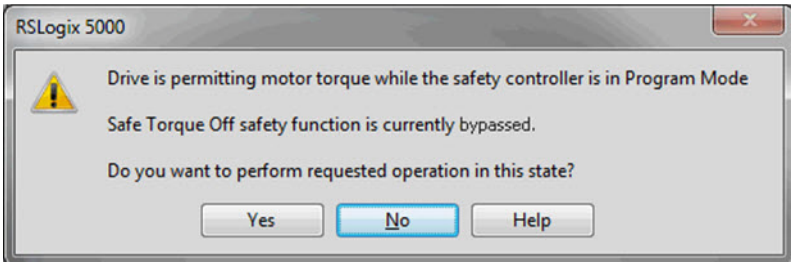

Warning Icon and Text in Axis Properties

In addition to the other warnings that require your acknowledgement, the Logix Designer application also provides warning icons and persistent warning messages in other Axis Properties dialog boxes when the integrated safety drive is in STO Bypass mode.

Figure 156 - Axis and Safe State Indications on the Hookup Services Dialog Box

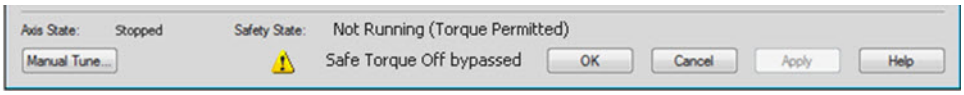

Figure 157 - Axis and Safe State Indications on Motion Direct Commands Dialog Box

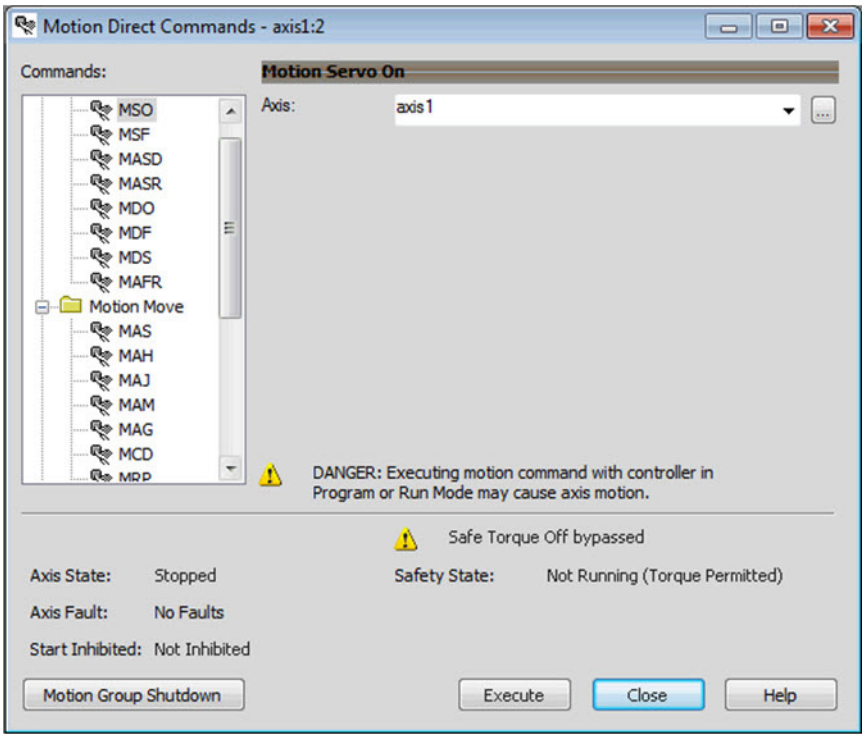

Figure 158 - Axis and Safe State Indications on the Motion Console Dialog Box

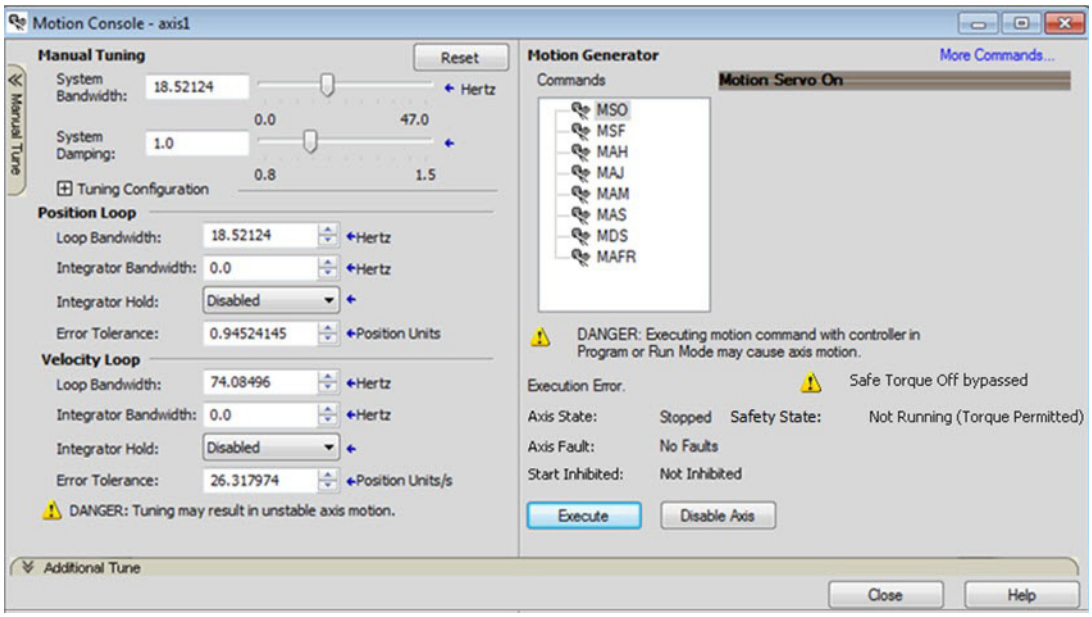

Functional Safety Considerations

ATTENTION: Before maintenance work can be performed in Program mode, the developer of the application must consider the implications of allowing motion through motion direct commands and should consider developing logic for run-time maintenance operations to meet the requirements of machine safety operating procedures.

ATTENTION: Motion is allowed and the STO function is not available when motion direct commands are used in Program mode.
Motion direct commands issued when the controller is in Program mode cause the drive to bypass the STO Active condition.
It is your responsibility to implement additional preventive measures to maintain safety integrity of the machinery during execution of motion direct commands in Program mode.

ATTENTION: To avoid personal injury and damage to equipment in the event of unauthorized access or unexpected motion during authorized access, return the controller to Run mode and remove the key before leaving the machine unattended.

Integrated Safe Torque-off Specifications

IMPORTANT To maintain safety rating, Kinetix 5700 drives must be installed inside protected control panels or cabinets appropriate for the environmental conditions of the industrial location. The protection class of the panel or cabinet must be IP54 or higher.

Table 173 - Integrated STO Specifications

Attribute	Value	Logix Designer Tag Name
Safety connection RPI, min	6 ms	N/A
Input assembly connections (2198-*xxxx*-ERS3 drives)	3	N/A
Input assembly connections (2198-*xxxx*-ERS4 drives)	1	
Output assembly connections	1	N/A
Integrated safety open request support	Type 1 and Type 2 requests	N/A
Axis safety status	Bit 0: Safety fault	Axis.SafetyFaultStatus
	Bit 1: Safety reset request	Axis.SafetyResetRequestStatus
	Bit 2: Safety Reset Required	Axis.SafetyResetRequiredStatus
	Bit 3: Safe torque-off active	Axis.SafeTorqueOffActiveStatus
	Bit 4: Safe torque disabled	Axis.SafeTorqueDisabledStatus
	Bit 5…31: Undefined (0)	N/A
Axis safety faults	Bit 1: Safety core fault	Axis.SafetyCoreFault
	Bit 3: Safe torque-off fault	Axis.SafeTorqueOffFault
	All others: Undefined (0)	N/A

Table 174 - Single-axis Inverter STO Assembly Specifications

Attribute	Value	Logix Designer Tag Name
Safety input assembly	Bit 0: Torque disabled	Drv:SI.TorqueDisabled
	Bit 6: Safety fault	Drv:SI.SafetyFault
	Bit 7: Reset required	Drv:SI.ResetRequired
Safety output assembly	Bit 0: Safe torque-off output	Drv:SO.SafeTorqueOff or Drv:SO.STOOutput
	Bit 7: Reset request	Drv:SO.Reset or Drv:SO.ResetRequest

Table 175 - Dual-axis Inverter STO Assembly Specifications

Attribute	Value	Logix Designer Tag Name
Safety input assembly	Byte 0 Bit 0: Torque disabled 1	Drv:SI.TorqueDisabled1
	Byte 0 Bit 6: Safety fault 1	Drv:SI.SafetyFault1
	Byte 0 Bit 7: Reset required 1	Drv:SI.ResetRequired1
	Byte 1 Bit 0: Torque disabled 2	Drv:SI.TorqueDisabled2
	Byte 1 Bit 6: Safety fault 2	Drv:SI.SafetyFault2
	Byte 1 Bit 7: Reset required 2	Drv:SI.ResetRequired2
Safety output assembly	Byte 0 Bit 0: Safe torque-off output 1	Drv:SO.SafeTorqueOff1 or Drv:SO.STOOutput1
	Byte 0 Bit 7: Reset request 1	Drv:SO.Reset1or Drv:SO.ResetRequest1
	Byte 1 Bit 0: Safe torque-off output 2	Drv:SO.SafeTorqueOff2 or Drv:SO.STOOutput2
	Byte 1 Bit 7: Reset request 2	Drv:SO.Reset2or Drv:SO.ResetRequest2

Notes:

Interconnect Diagrams

This appendix provides wiring examples and system block diagrams for your Kinetix® 5700 system components.

Topic	Page
Interconnect Diagram Notes	341
Power Wiring Examples	343
Capacitor Module Status Wiring Example	357
DC-bus Conditioner Module Status Wiring Example	357
Contactor Wiring Examples	358
Passive Shunt Wiring Examples	359
Active Shunt Wiring Examples	360
Kinetix 5700 Servo Drive and Rotary Motor Wiring Examples	362
Kinetix 5700 Servo Drive and Linear Actuator Wiring Examples	367
System Block Diagrams	373

Interconnect Diagram Notes

This appendix provides wiring examples to assist you in wiring the Kinetix 5700 drive system. These notes apply to the wiring examples on the following pages.

Table 176 - Interconnect Diagram Notes

Note	Information
1	For power wiring specifications, refer to Wiring Requirements on page 136.
2	For input fuse and circuit breaker sizes, refer to Circuit Breaker/Fuse Selection on page 46.
3	For fuse and circuit breaker sizes and other 8720MC-RPS specifications, see the 8720MC Regenerative Power Supply User Manual, publication 8720MC-RM001.
4	The iTRAK® system with TriMax bearings power supply must have three-phase power sourced from grounded-wye power distribution.
5	AC (EMC) line filter is required for CE compliance. Mount the line filter with 50 mm (1.97 in.) minimum clearance between the drive and filter. If routing in wireway is unavoidable, use shielded cable with shields grounded to the drive chassis and filter case. For AC line filter specifications, refer to Kinetix Servo Drives Specifications Technical Data, publication KNX-TD003. 2198-DBR*xx*-F line filters are preferred.
6	Terminal block is required to make connections.
7	Cable shield clamp must be used to meet CE requirements with Bulletin 2090 power cables 2 AWG and smaller. See Customer-supplied Motor Power Cables on page 173 to meet CE when wiring 2198-S263-ERS*x* and 2198-S312-ERS*x* drives with power cables larger than 2 AWG.
8	2198-D*xxx* -ERS*x* dual-axis inverters include separate digital inputs, DSL feedback, universal feedback, motor power, and motor brake wiring plugs for each axis.
9	See Digital Inputs Connector Pinouts beginning on page 101 for digital input configurable functions and default settings.
10	• When a 2198-S*xxx*-ERS*x* single-axis inverter is the first drive module (adjacent to the 2198-CAPMOD-2240 capacitor module) you must configure the Digital Input category in the Logix Designer application as Regeneration OK and wire the IOD connector. • When a 2198-D*xxx*-ERS*x* dual-axis inverter is the first drive module (adjacent to the 2198-CAPMOD-2240 capacitor module) and Axis 1 and 3 are used, you must configure the Digital Input category in the Logix Designer application as Regeneration OK and wire the IOD connector for each axis.

Table 176 - Interconnect Diagram Notes (continued)

Note	Information
11	PE ground connection bonded to the panel must be used to meet CE requirements. See Ground the Drive System on page 134.
12	Contactor coil (MC) needs integrated surge suppressors for AC coil operation and must have a normally-open auxiliary contact that is terminated at TB3 (24V DC to MC input as shown). See the 8720MC Regenerative Power Supply User Manual, publication 8720MC-RM001 for contactor types and wiring examples.
13	For M1 contactor selection and specifications, refer to Contactor Selection on page 48.
14	Internal shunt wired to the RC connector is default configuration. Remove internal shunt wires to attach external shunt wires.
15	Default configuration for ground screws or jumper is for grounded power at customer site. For impedance-grounded power configurations, remove the screws/jumper. Refer to Input Power Configurations for Kinetix 5700 Power Supplies on page 123 for more information.
16	Leave jumper between PR2 and PR3 as shown to use the internal precharge resistor. Remove jumper when external precharge/circuit is required. For more information, refer to the 8720MC Regenerative Power Supply User Manual, publication 8720MC-RM001.
17	**ATTENTION:** Implementation of control circuits and risk assessment is the responsibility of the machine builder. Reference international standards IEC 62061 and ISO 13849-1 estimation and safety performance categories.
18	**ATTENTION:** An AC three-phase mains contactor must be wired in series between the branch circuit protection and the Kinetix 5700 system power supply. In addition, the AC three-phase contactor control string must be wired in series with the contactor-enable relay at the CED connector. Refer to Contactor Enable Relay on page 108, for more information. The recommended minimum wire size for wiring the circuitry to the contactor-enable connector is 1.5 mm^2 (16 AWG).
19	For motor cable specifications, refer to Kinetix Motion Accessories Specifications Technical Data, publication KNX-TD004.
20	Brake connector pins are labeled plus (+) and minus (-) or F and G respectively. Power connector pins are labeled U, V, W, and ⏚ (GND) or A, B, C, and ⏚ (D) respectively.
21	LDAT-Series linear thrusters do not have a brake option, so only the 2090-CPWM7DF-*xx*AA*xx* or 2090-CPWM7DF-*xx*AF*xx* motor power cables apply.
22	MPAS-B*xxxxx*-VxxSxA (ballscrew) linear stages use the 9V supply. MPAS-B*xxxxx*-ALMx2C (direct-drive) linear stages use the 5V supply.
23	Mount the 8720MC-RPS unit on the same panel and as close to the Kinetix 5700 drive system as possible. DC-bus cables not to exceed 2.0 m (6.5 ft), maximum length. See the 8720MC Regenerative Power Supply User Manual, publication 8720MC-RM001, for installation and wiring instructions.
24	MPL-A/B15*xx*-H…MPL-A/B45*xx*-H, MPL-A15*xx*-V/E…MPL-A2*xx*-V/E, MPL-A3*xx*-S/M…MPL-A45*xx*-S/M, MPM-A115*xx*…MPM-A130*xx*, MPF-A3*xx*…MPF-A45*xx*, MPS-A*xxx*, MPAS-B*xxx* (direct drive), and encoders use the +5V DC supply.
25	MPL-B15*xx*-V/E…MPL-B2*xx*-V/E, MPL-B3*xx*-S/M…MPL-B6*xx*-S/M, MPL-A5*xx*, MPM-B*xx*, MPM-A165*xx*…MPM-A215*xx*, MPF-B*xx*, MPF-A5*xx*, MPS-B*xxx*, MPAR-B*xxx*, and MPAS-B*xxx* (ballscrew) encoders use the +9V DC supply.
26	The 2198-CAPMOD-2240 capacitor module is used in applications with up to 104 A maximum external DC-bus current. You can add the 2198-DCBUSCOND-RP312 DC-bus conditioner module to the left or right of the capacitor module when the external DC-bus current exceeds 104 A, up to a maximum of 208 A.
27	The Converter OK relay provides a 24V signal to non-Kinetix 5700 inverters indicating that they can draw power from the regenerative power supply and that the power supply is not faulted. This signal is intended for use with Kinetix 6000, Kinetix 6200, or Kinetix 7000 drives when migrating from the 8720MC-RPS to the 2198-RP*xxx* regenerative bus supply. Interposing relay can be required if more than one drive is attached.

Power Wiring Examples

You must supply input power components. The three-phase line filter is wired downstream of the circuit protection devices. Each drive module includes the appropriate DC-bus link and connector set. The 24V supply can be jumpered from drive-to-drive by using discrete wires or the shared-bus connection system.

In this example, the inverter drives and optional accessory modules are downstream of a single 2198-P*xxx* DC-bus power supply.

Figure 159 - DC-bus Power Supply (single converter) Configuration

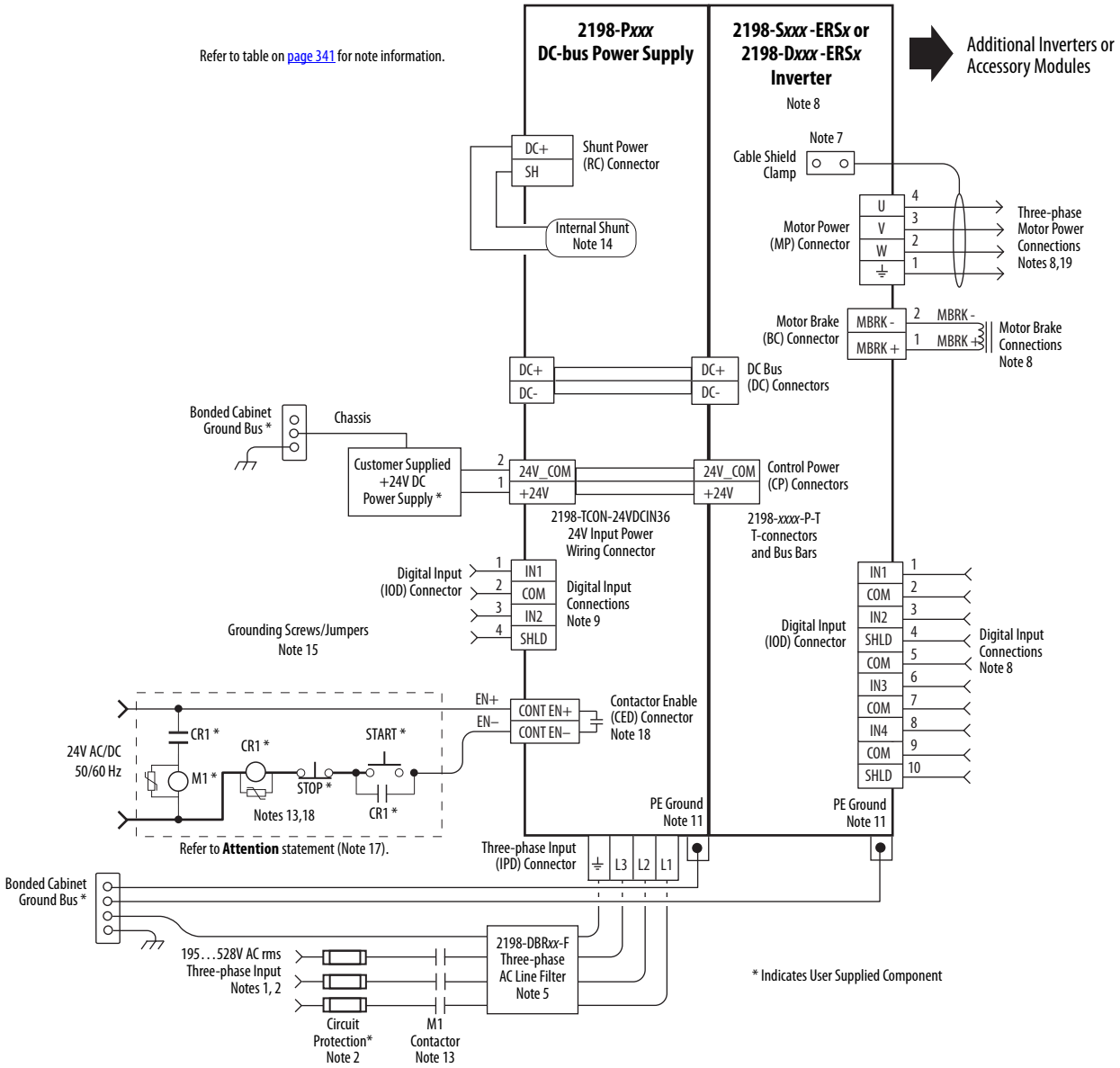

In this example, the inverter drives and optional capacitor modules are downstream of three DC-bus (converter) power supplies. When two or three DC-bus power supplies are used, they must be catalog number 2198-P208. This configuration provides more power (kW) to the drive system.

Figure 160 - DC-bus Power Supply (multiple converters) Configuration

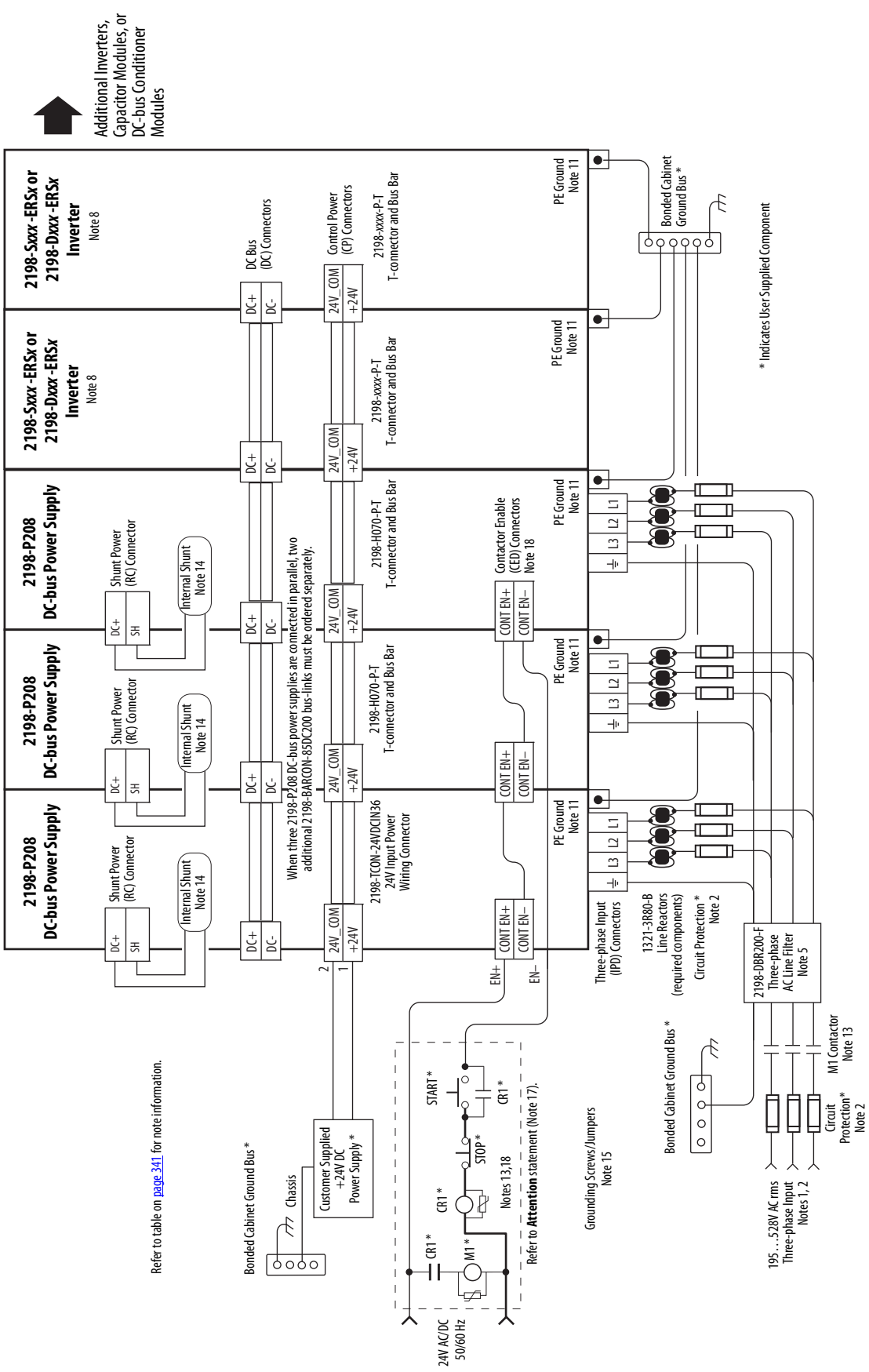

In this example, the 2198-CAPMOD-2240 capacitor module is included for energy storage and to improve dynamic performance.

Figure 161 - DC-bus Power Supply with Capacitor Module

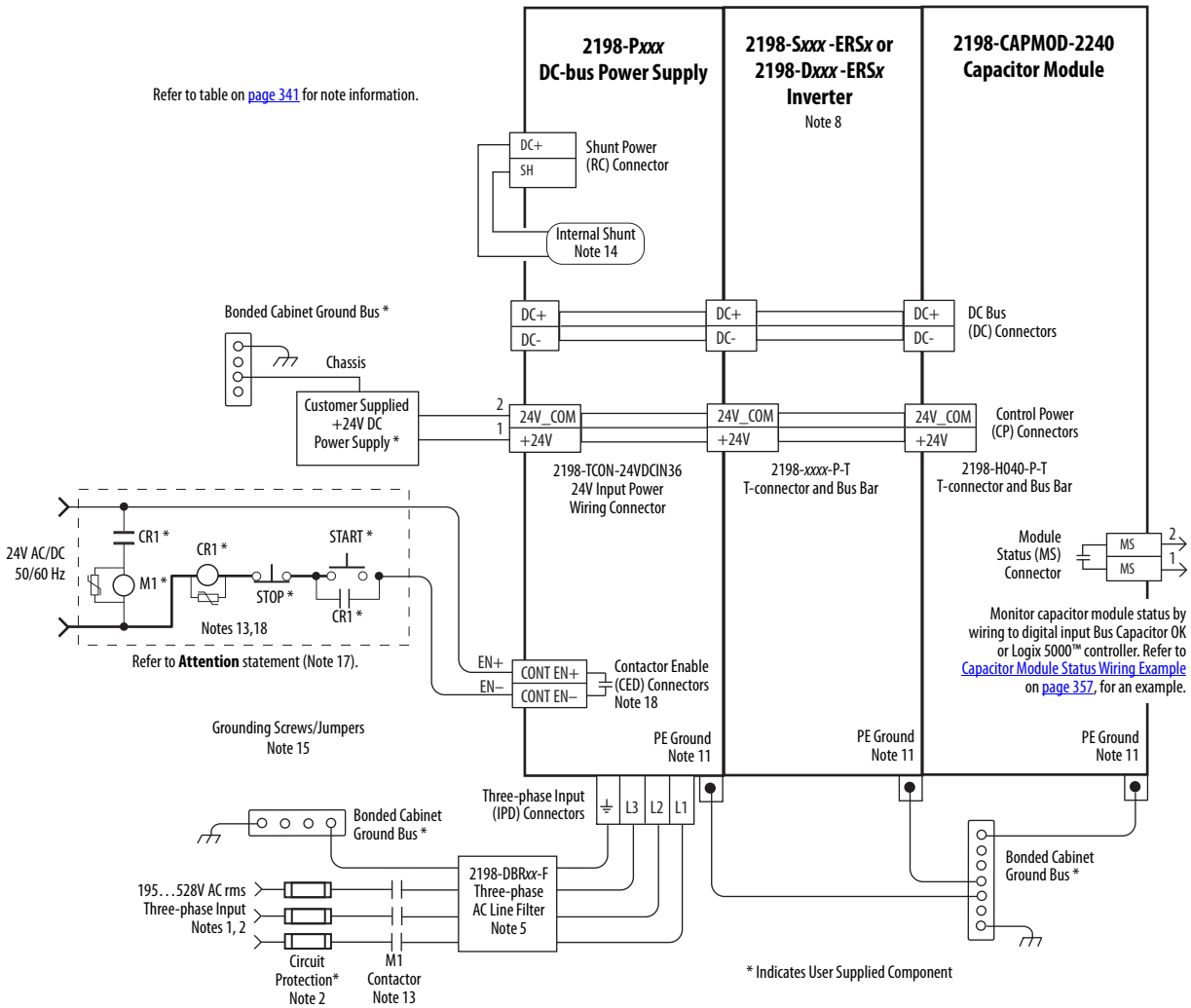

Figure 162 - DC-bus Power Supply (single iTRAK power supply) Configuration

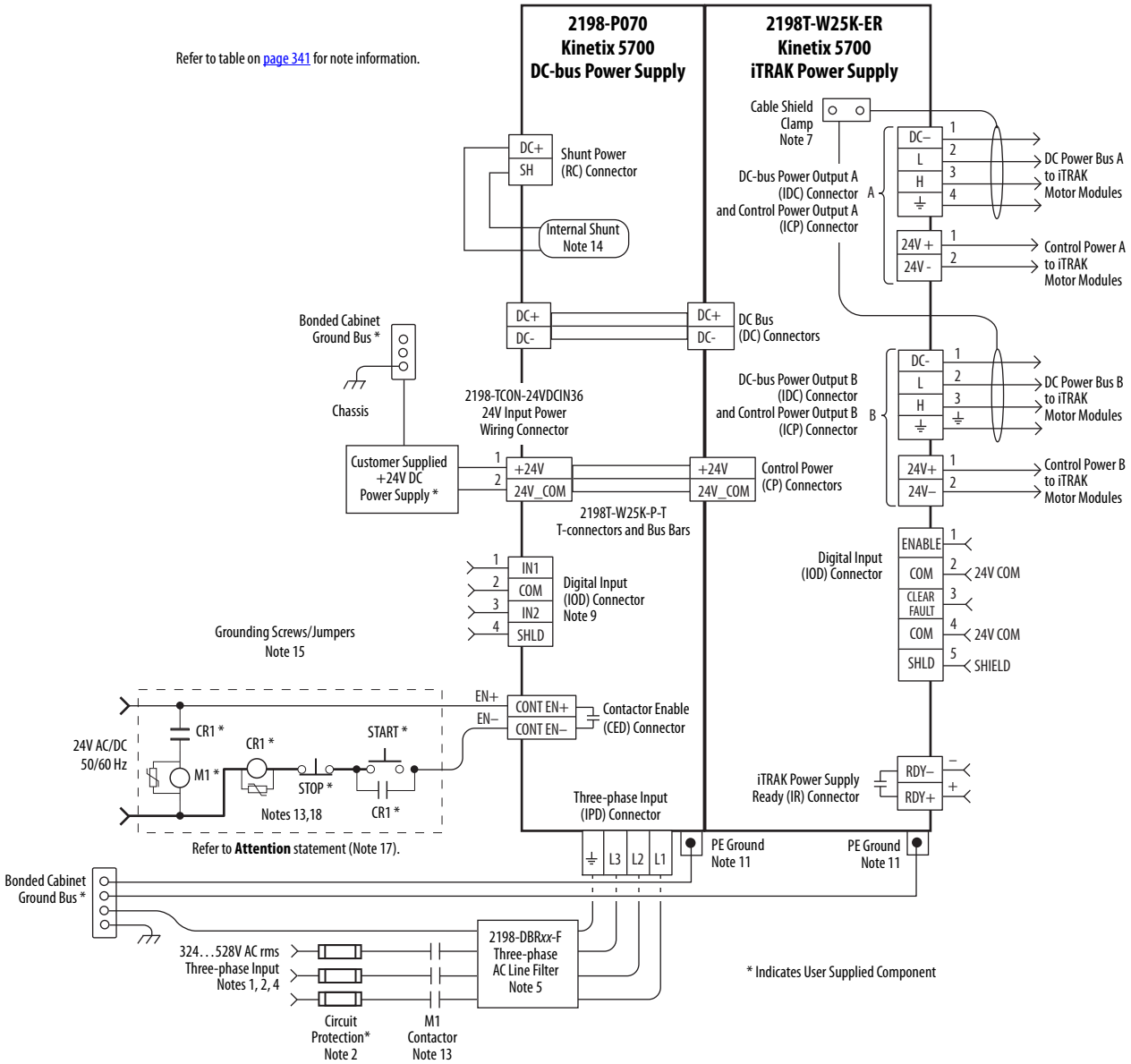

In this example, the DC-bus power supply 24V input-wiring connector and the three iTRAK power supply 24V input wiring connectors are wired separately. The 2198T-W25K-P-IN input wiring connector is rated for 41 A. See Appendix C on page 395 to determine 24V current requirements needed for proper distribution for 24V control power.

Figure 163 - DC-bus Power Supply (multiple iTRAK power supply) Configuration

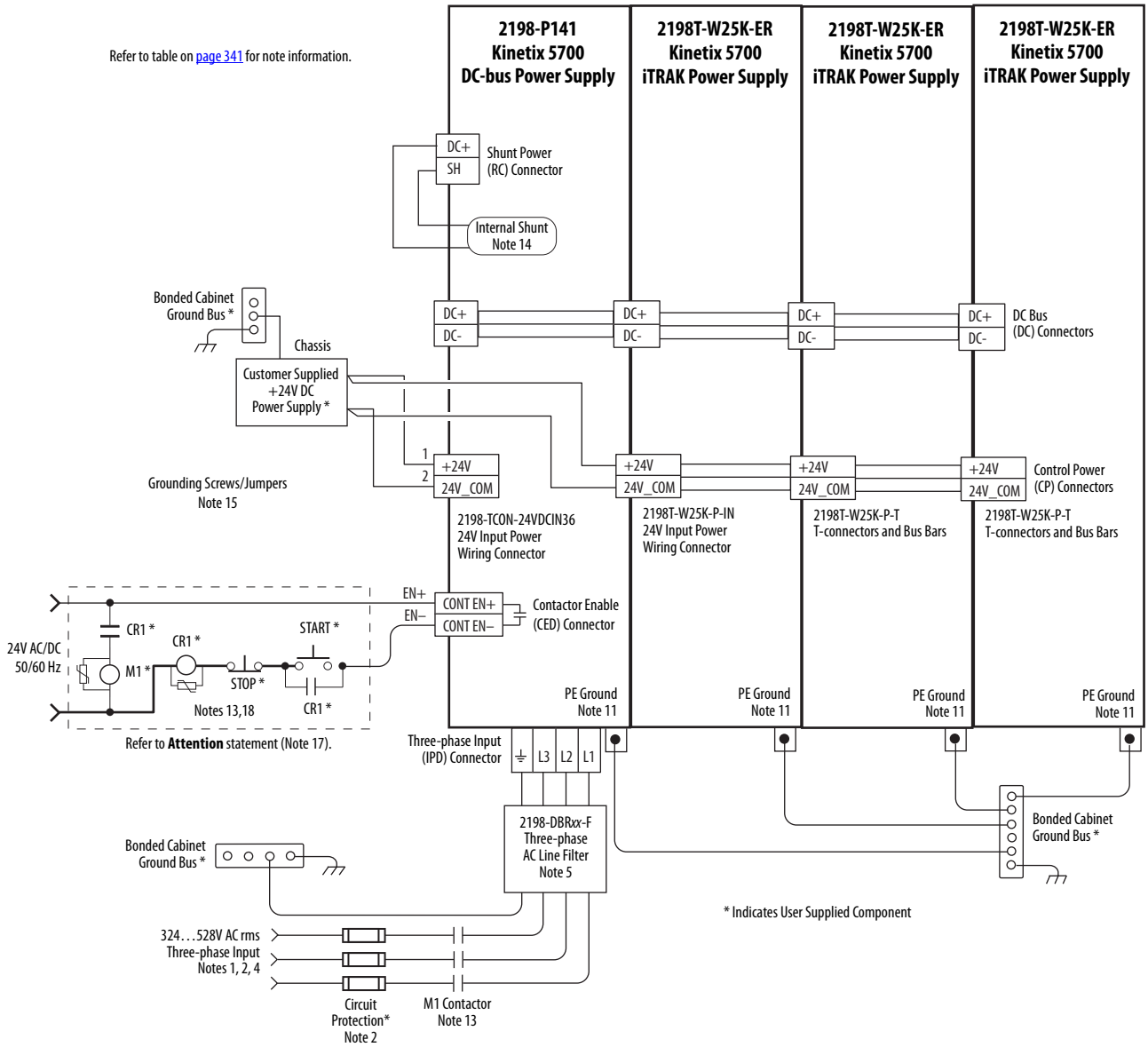

In this example, the inverter drives and optional accessory modules are downstream of a 2198-RP*xxx* regenerative bus supply.

Figure 164 - Regenerative Bus Supply Configuration

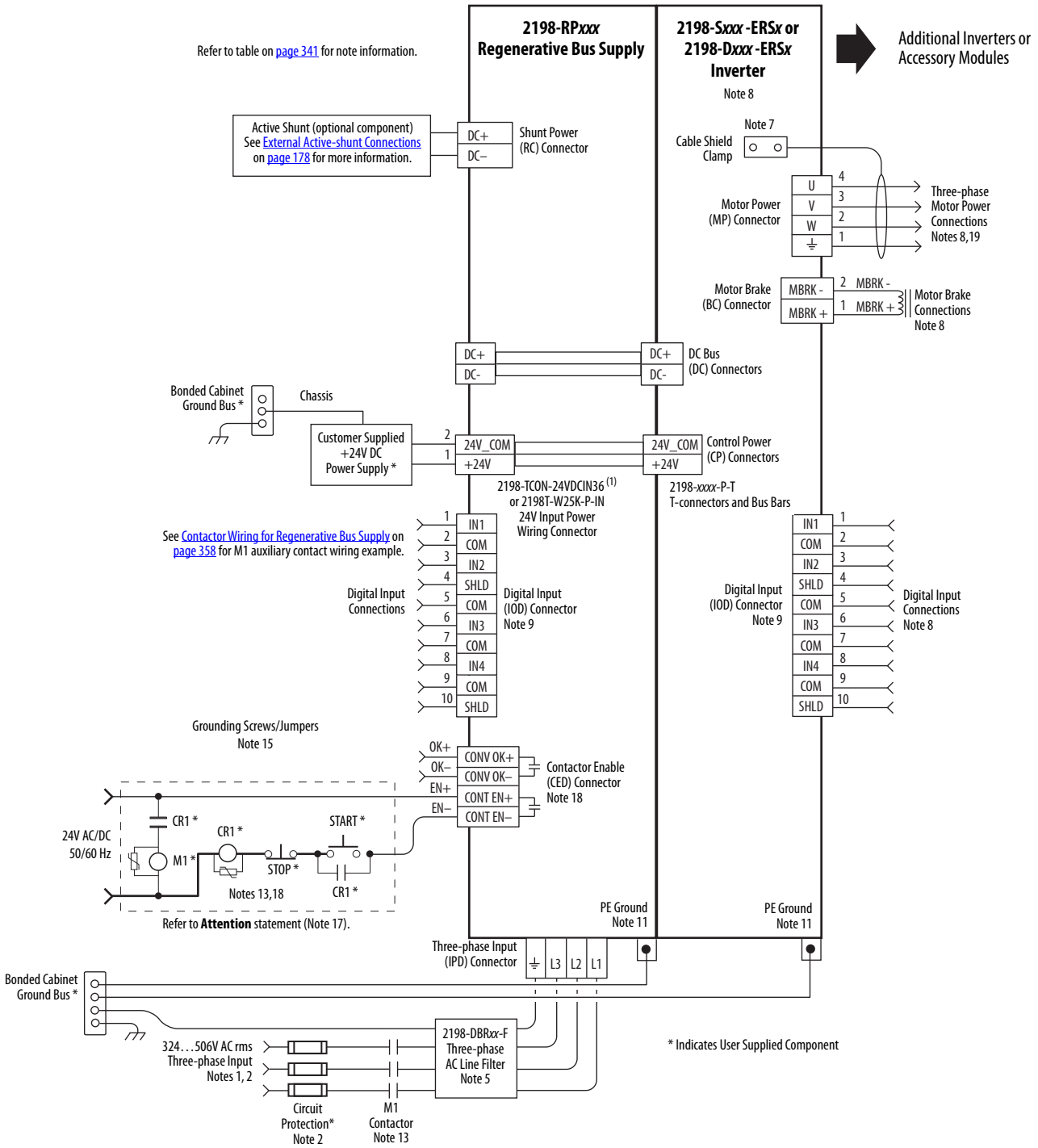

(1) Use 2198-TCON-24VDCIN36 input wiring connector with 2198-RP088 and 2198-RP200 bus supplies. Use 2198T-W25K-P-IN input wiring connector with 2198-RP263 and 2198-RP312 bus supplies. See CP Connector Wiring - Shared Bus on page 141 for wiring specifications.

In this example, the 2198-DCBUSCOND-RP312 DC-bus conditioner module is included because total motor cable length exceeds 400 m (1312 ft).

Figure 165 - Regenerative Bus Supply with DC-bus Conditioner Module

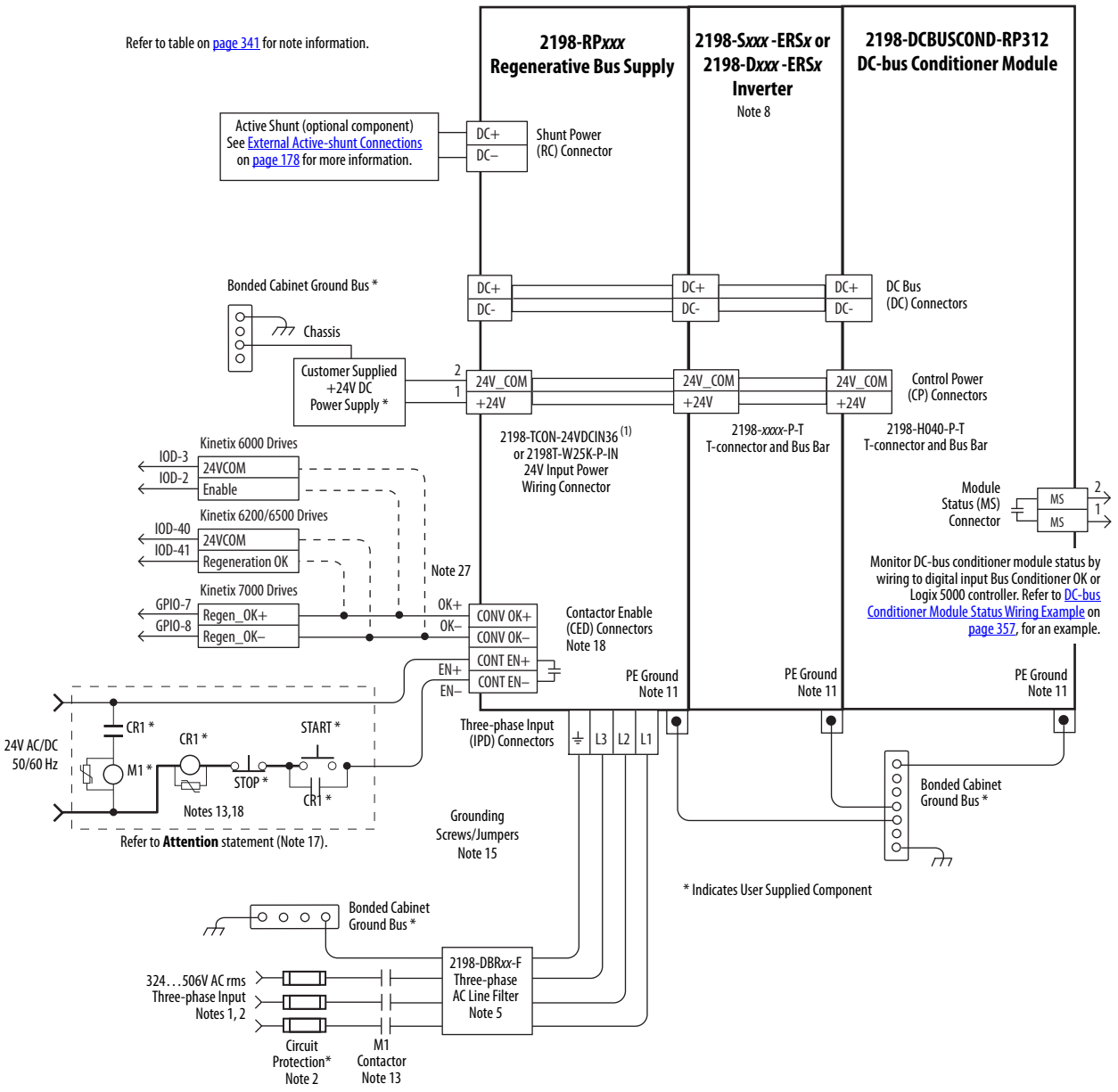

(1) Use 2198-TCON-24VDCIN36 input wiring connector with 2198-RP088 and 2198-RP200 bus supplies. Use 2198T-W25K-P-IN input wiring connector with 2198-RP263 and 2198-RP312 bus supplies. See CP Connector Wiring - Shared Bus on page 141 for wiring specifications.

IMPORTANT The regenerative bus supply is not compatible with the iTRAK power supply.

In this example, the 2198-CAPMOD-2240 capacitor module and 2198-CAPMOD-DCBUS-IO extension module are used for energy storage and to extend the DC-bus voltage to another inverter cluster. The capacitor modules are used alone when the external DC-bus current is ≤104 A. The extension module (or any combination of two accessory modules) is needed when the external DC-bus current is >104 A, up to a maximum 208 A.

Figure 166 - Kinetix 5700 Extended Drive System Example (extension module)

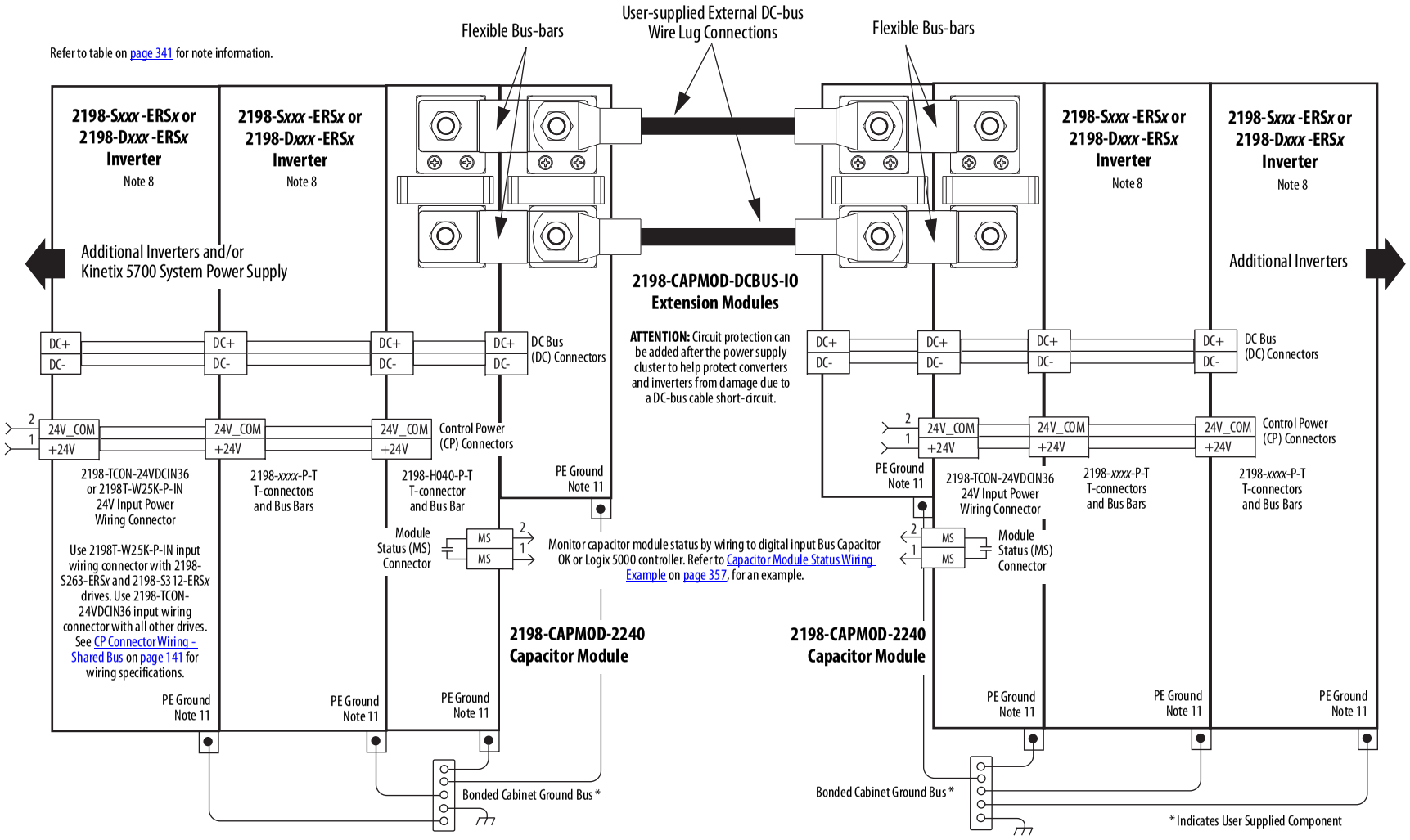

In this example, the 2198-CAPMOD-2240 capacitor module and 2198-DCBUSCOND-RP312 DC-bus conditioner module are used for energy storage and to extend the DC-bus voltage to another inverter cluster. The capacitor modules are used alone when the external DC-bus current is ≤104 A. The DC-bus conditioner module (or any combination of two accessory modules) is needed when the external DC-bus current is >104 A, up to a maximum 208 A.

Figure 167 - Kinetix 5700 Extended Drive System Example (DC-bus conditioner module)

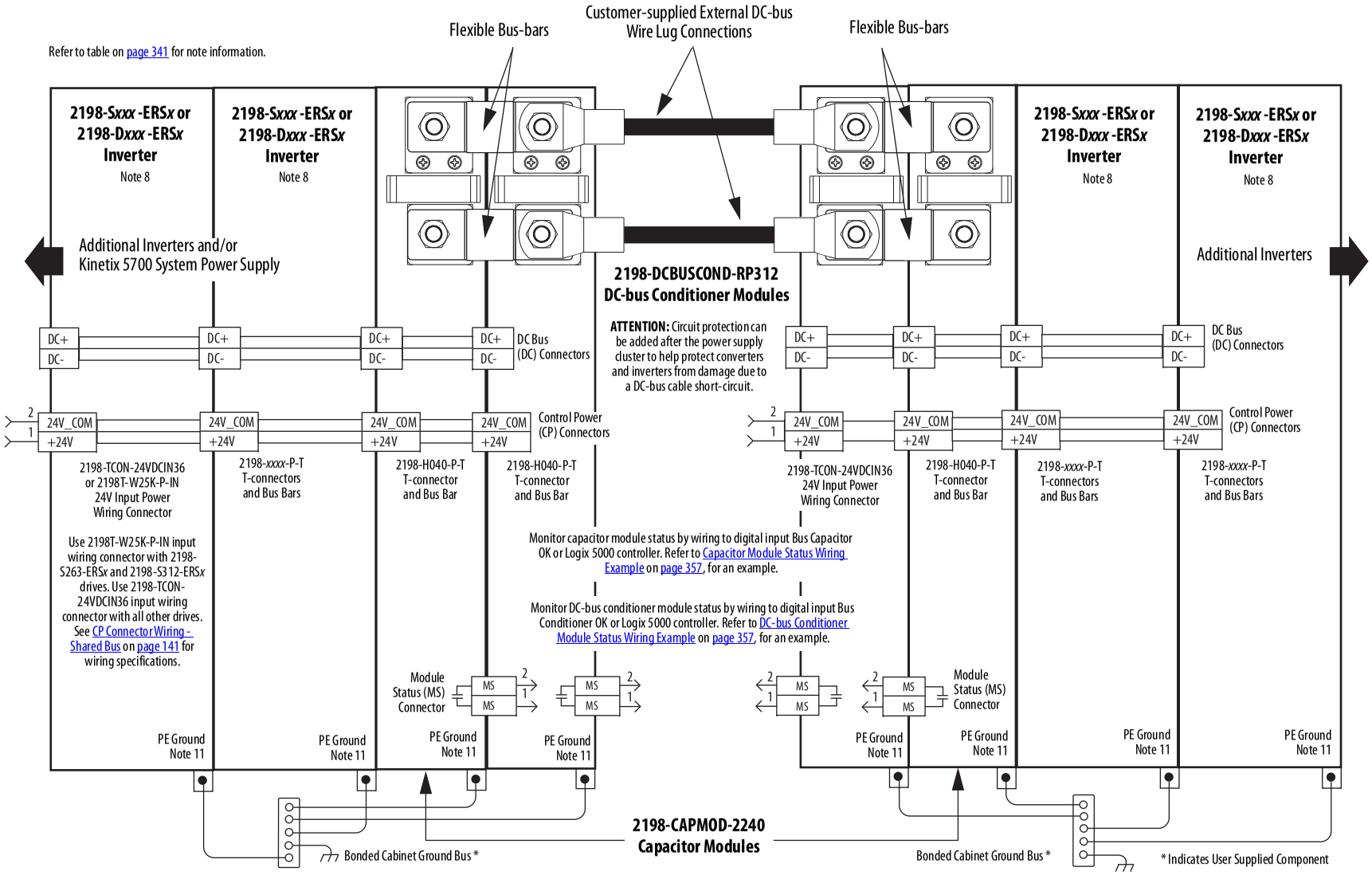

In this example, three-phase AC input power is fed to two 8720MC-RPS065 units in a leader/follower configuration. The DC-bus (TB1) terminals connect to the Kinetix 5700 DC-bus via the DC-bus conditioner module because the system current exceeds 104 A.

Figure 168 - 8720MC-RPS065 Leader/Follower Units with Kinetix 5700 Drive System

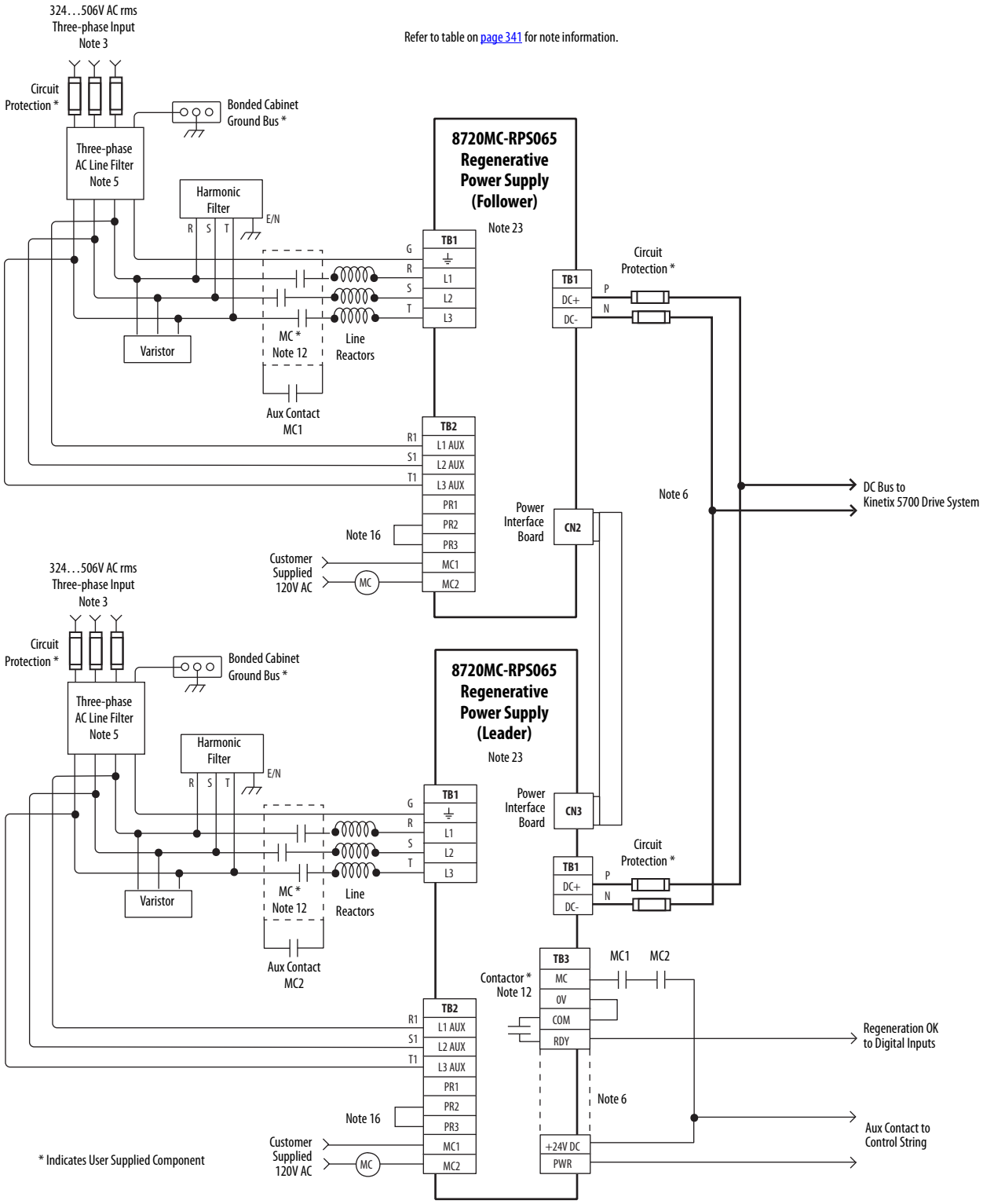

IMPORTANT The 8720MC-RPS regenerative power supply is not compatible with the iTRAK power supply.

8720MC-RPS065 Leader/Follower Units with Kinetix 5700 Drive System (continued)

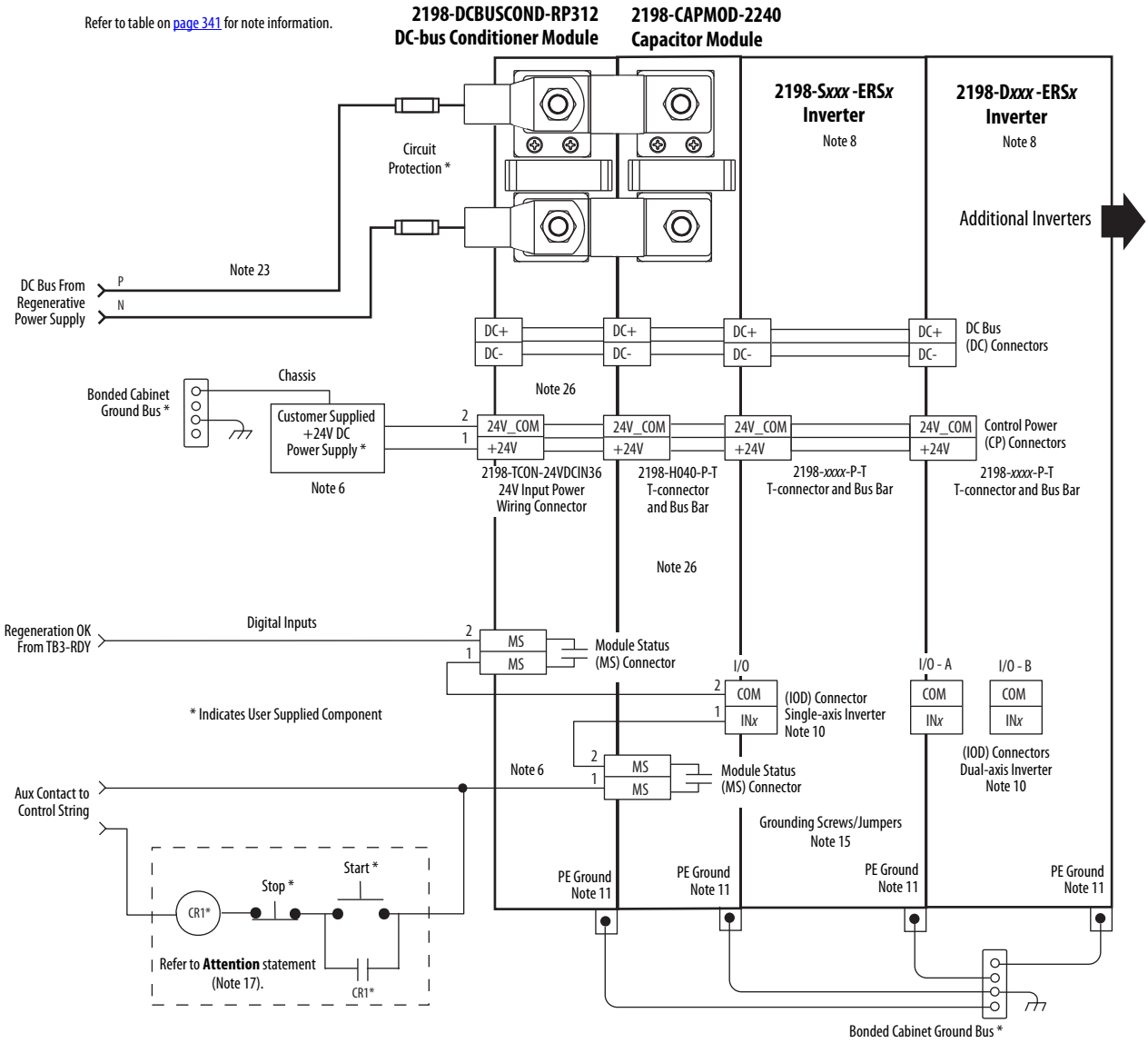

In this example, three-phase AC input power is fed to the 8720MC-RPS190 unit. The DC-bus (TB1) terminals connect to the Kinetix 5700 DC-bus via the DC-bus conditioner module because the system current exceeds 104 A.

IMPORTANT The 8720MC-RPS regenerative power supply is not compatible with the iTRAK power supply.

Figure 169 - 8720MC-RPS190 Unit with Kinetix 5700 Drive System

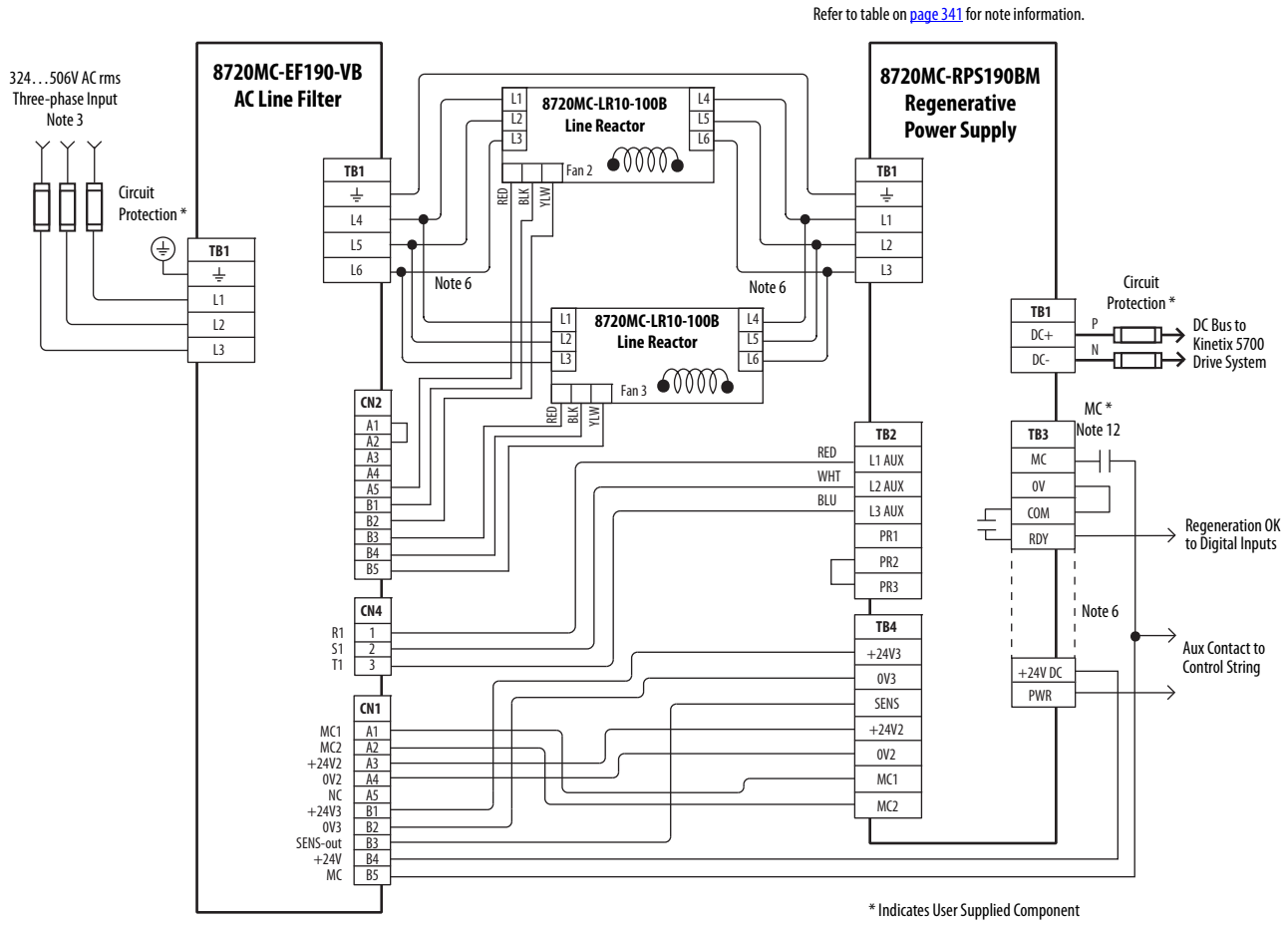

8720MC-RPS190 Unit with Kinetix 5700 Drive System (continued)

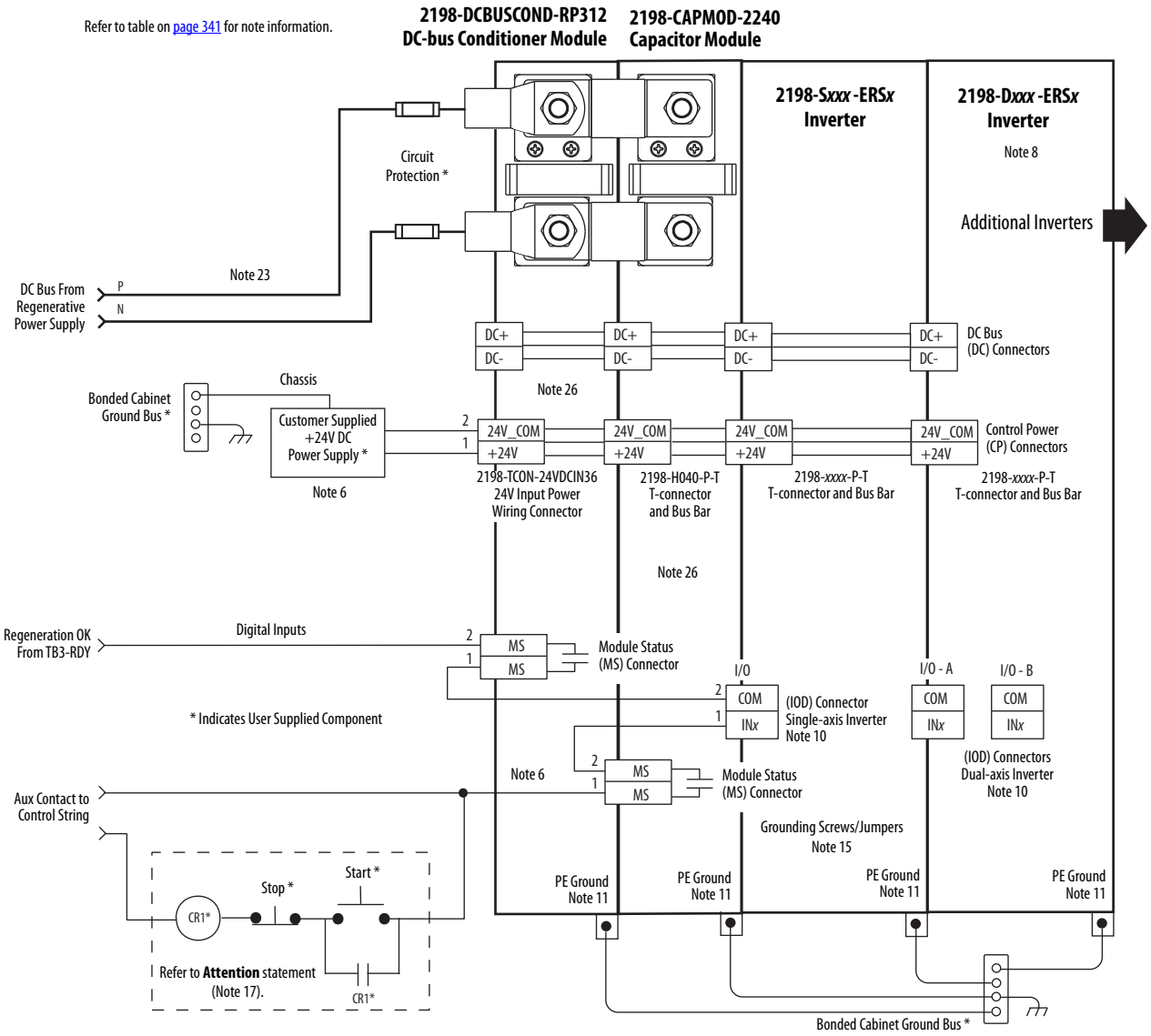

In this example, three-phase AC input power is fed to the Bulletin 8720MC-RPS065 regenerative power supply. The DC-bus voltage supplies the Kinetix 5700 DC-bus via the 2198-CAPMOD-2240 capacitor module. In configurations that exceed 104 A, up to a maximum of 208 A, the DC-bus conditioner module is also required.

IMPORTANT The 8720MC-RPS regenerative power supply is not compatible with the iTRAK power supply.

Figure 170 - 8720MC-RPS with Kinetix 5700 Drive System

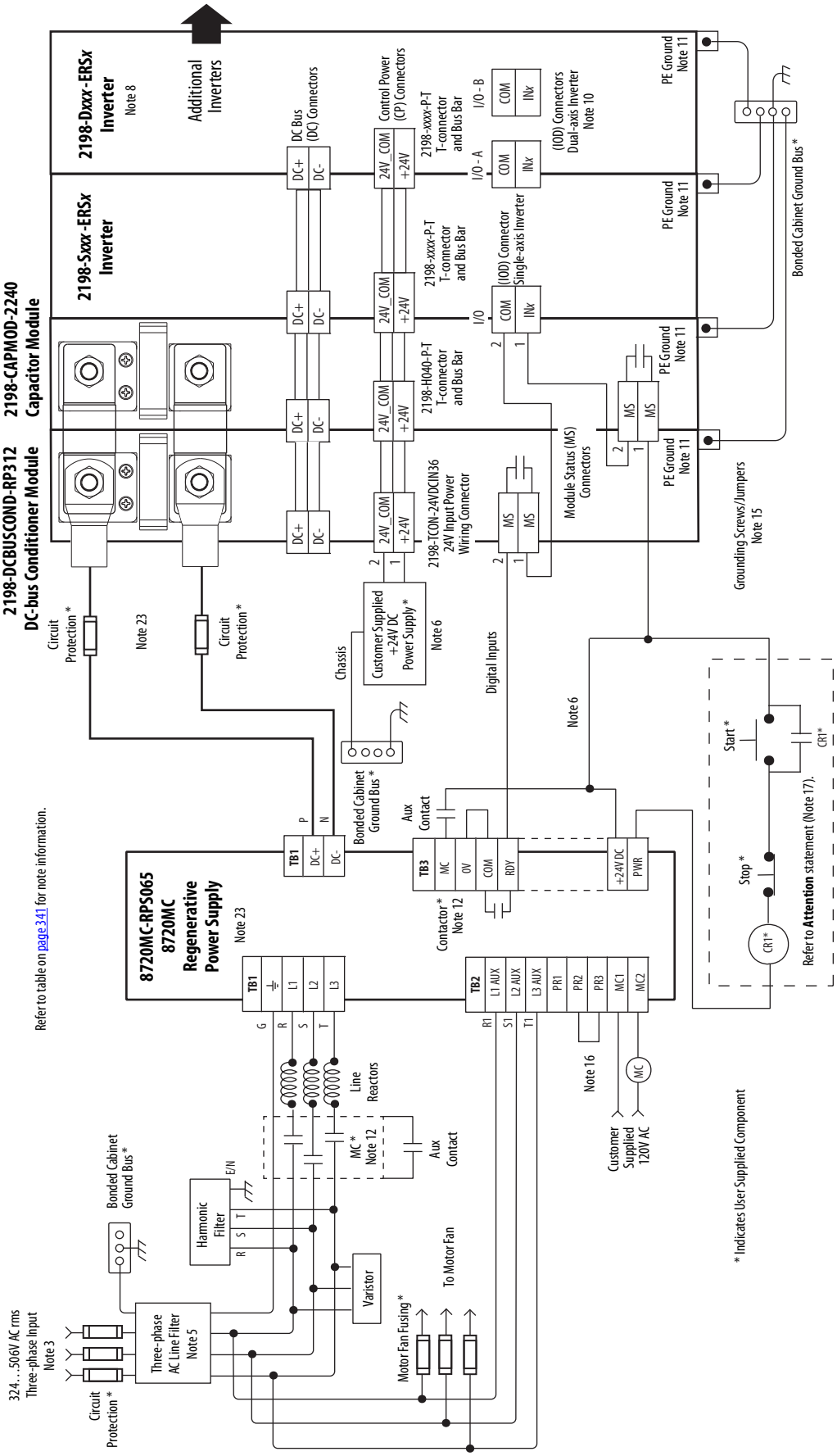

Capacitor Module Status Wiring Example

You can configure either of the DC-bus power supply digital inputs as Bus Capacitor OK in the Logix Designer application to monitor the Module Status output. Refer to page 201 to see how the DC-bus power supply Digital Inputs category is configured.

Figure 171 - DC-bus Power Supply with Capacitor Module

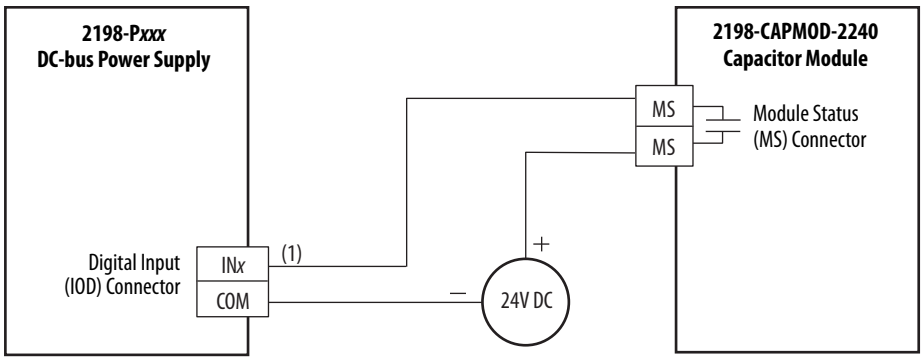

(1) Configure either of two digital inputs as Bus Capacitor OK. For DC-bus power supply configurable functions, see the DC-bus Power Supply Configurable Functions table on page 101.

Refer to the Kinetix 5700 Capacitor Modules Installation Instructions, publication 2198-IN008, for additional installation information.

DC-bus Conditioner Module Status Wiring Example

You can configure any of the regenerative bus supply digital inputs as Bus Conditioner OK in the Logix Designer application to monitor the Module Status output. Refer to page 205 to see how the regenerative bus supply Digital Inputs category is configured.

Figure 172 - Regenerative Bus Supply with DC-bus Conditioner Module

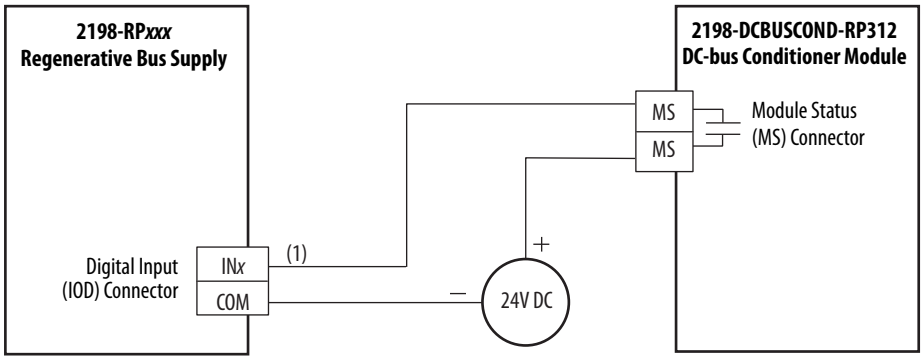

(1) Configure any one of four digital inputs as Bus Conditioner OK. For regenerative bus supply configurable functions, see the Regenerative Bus Supply Configurable Functions table on page 102.

Refer to the Kinetix 5700 DC-bus Conditioner Module Installation Instructions, publication 2198-IN016, for additional installation information.

Contactor Wiring Examples

We recommend that you wire an Allen-Bradley® (Bulletin 100) auxiliary contactor to the 2198-RP*xxx* regenerative-bus supply digital input (IOD connector) and configure AC Line Contactor OK to monitor three-phase input power. Use the Normally Open (N.O.) auxiliary contact, if more than one auxiliary contact is available.

Figure 173 - Contactor Wiring for DC-bus Power Supply

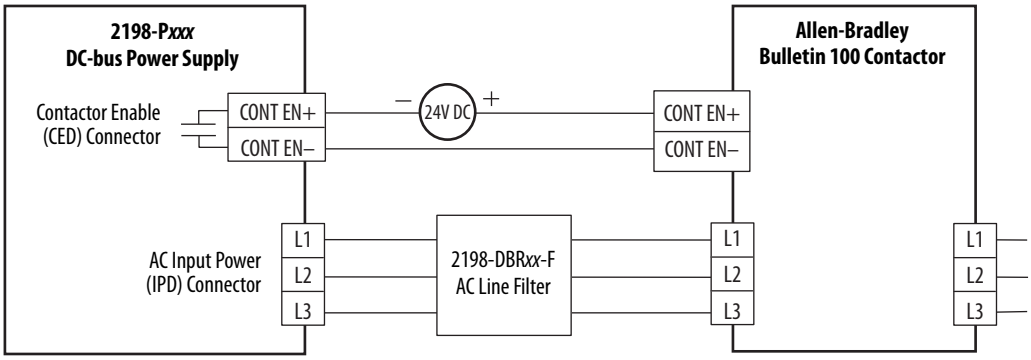

Figure 174 - Contactor Wiring for Regenerative Bus Supply

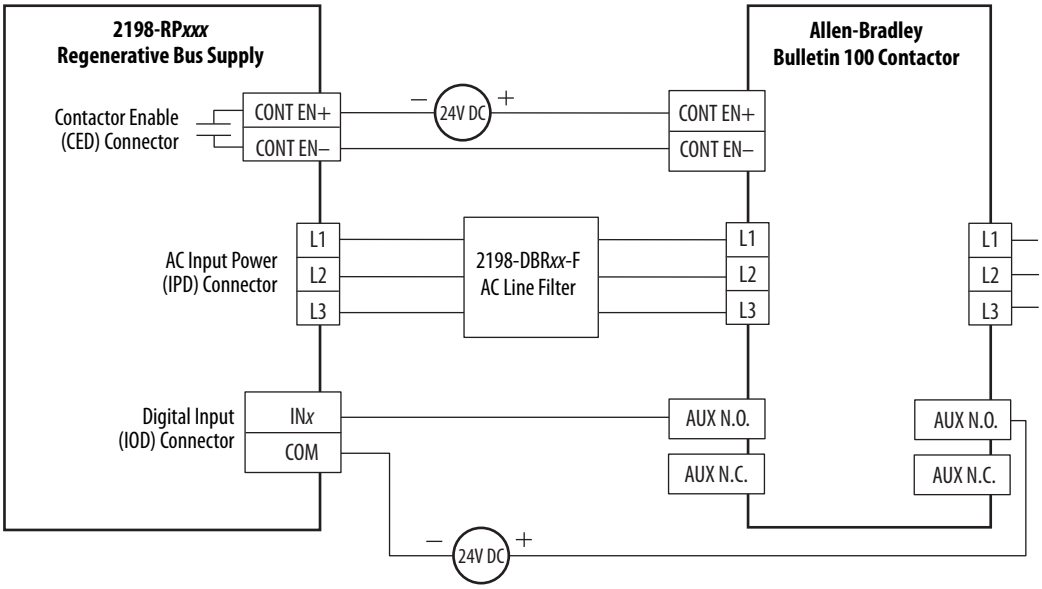

(1) Configure digital input #2 as AC Line Contactor OK (default setting). For regenerative bus supply configurable functions, see the Regenerative Bus Supply Configurable Functions table on page 102.

Refer to IEC Contactor Specifications Technical Data, publication 100-TD013, for additional contactor related information.

Passive Shunt Wiring Examples

Wiring from the Bulletin 2198 shunt modules and resistor are made directly to the shunt (RC) connector. You can configure either of the DC-bus power supply digital inputs as Shunt Thermal Switch OK in the Logix Designer application. Refer to page 201 to see how the DC-bus power supply Digital Input category is configured.

IMPORTANT Passive shunts attach to only 2198-P*xxx* DC-bus power supplies. Before wiring the Bulletin 2198 external shunt to the RC connector, remove the wires from the internal servo-drive shunt. Do not connect both internal and external shunt resistors to the DC-bus power supply.

ATTENTION: To avoid damage to the Kinetix 5700 drive system, wire the 2198-R014, 2198-R031, or 2198-R127 shunt thermal switch to a digital input on the DC-bus power supply and configure the Shunt Thermal Switch OK function in the Logix Designer application.

Figure 175 - DC-bus Power Supply with External Passive Shunt Module

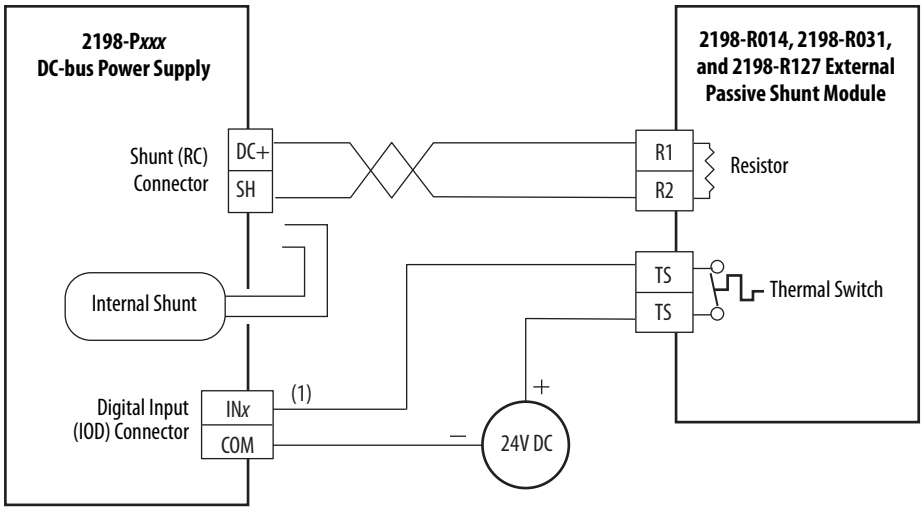

(1) Configure either of two digital inputs as Shunt Thermal Switch OK. For DC-bus power supply configurable functions, see the DC-bus Power Supply Configurable Functions table on page 101.

Figure 176 - DC-bus Power Supply with External Passive Shunt Resistor

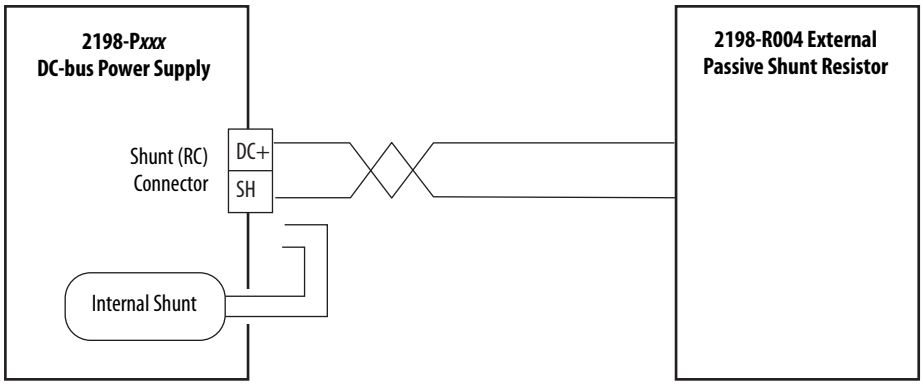

Refer to the Kinetix 5700 Passive Shunt Module Installation Instructions, publication 2198-IN011, for additional installation information.

Active Shunt Wiring Examples

Active shunts are available from the Rockwell Automation Encompass™ partner Powerohm Resistors, Inc. (http://www.powerohm.com).

IMPORTANT Powerohm Bulletin PKB*xxx* active shunt modules use built-in internal brake resistors. Bulletin PWB*xxx* active shunt modules require appropriately sized external brake resistors.

For compatible Powerohm active shunts paired with 2198-P*xxx* DC-bus power supplies and 2198-RP*xxx* regenerative bus supplies, see External Active-shunt Connections on page 178.

ATTENTION: To avoid damage to the Kinetix 5700 drive system, wire the active shunt thermal switch to a digital input on the power supply and configure the Shunt Thermal Switch OK function in the Logix Designer application.

Figure 177 - 2198-RP*xxx* Supply with External Active Shunt (built-in brake resistor)

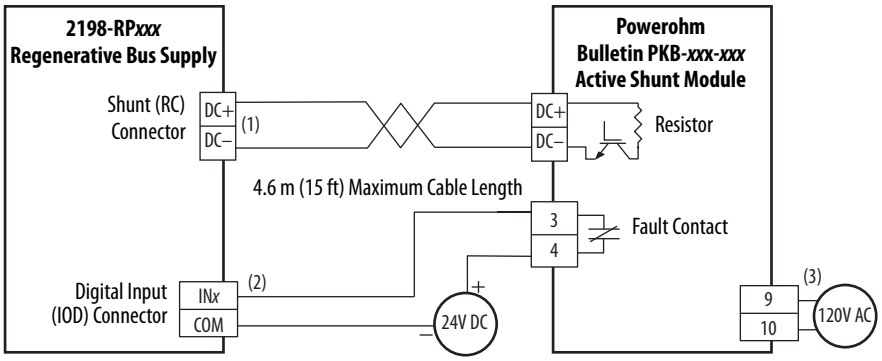

(1) The active shunt (RC) connector is rated for wire size up to 6 mm^2 (10 AWG). When conductors larger than 6 mm^2 (10 AWG) connect to the shunt, the drive connection must be made to the external DC-bus connections on an accessory module.
(2) Configure any available digital input as Shunt Thermal Switch OK. See the Digital Inputs Connector Pinouts on page 101.
(3) Powerohm PKB050 and PKB050-800 shunts require 120V AC between pins 9 and 10 to supply power to the cooling fans.

Figure 178 - 2198 Power Supply with External Active Shunt (built-in brake resistor)

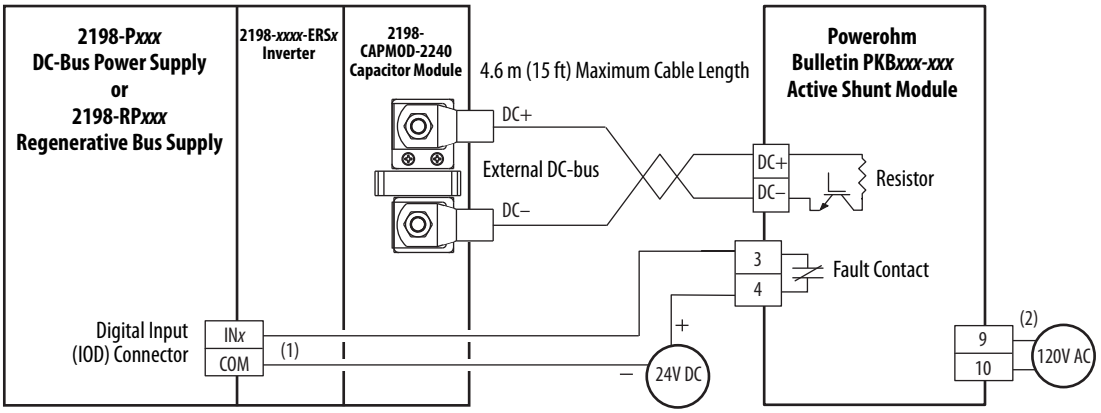

(1) Configure any available digital input as Shunt Thermal Switch OK. See the Digital Inputs Connector Pinouts on page 101.
(2) Powerohm PKB050 and PKB050-800 shunts require 120V AC between pins 9 and 10 to supply power to the cooling fans.

See Knowledgebase document 1082776 for more information on wiring to these Powerohm Bulletin PKB*xxx* active shunts.

IMPORTANT Due to the 10 A connector current rating, connections to the Active Shunt (RC) connector on the regenerative bus supply are limited to Powerohm PKB*xxx-xxx* active shunts. PWB*xxx-xxx* active shunt connections must be made to the 2198-CAPMOD-2240 capacitor module.

Figure 179 - 2198 Power Supply with External Active Shunt (external brake resistor)

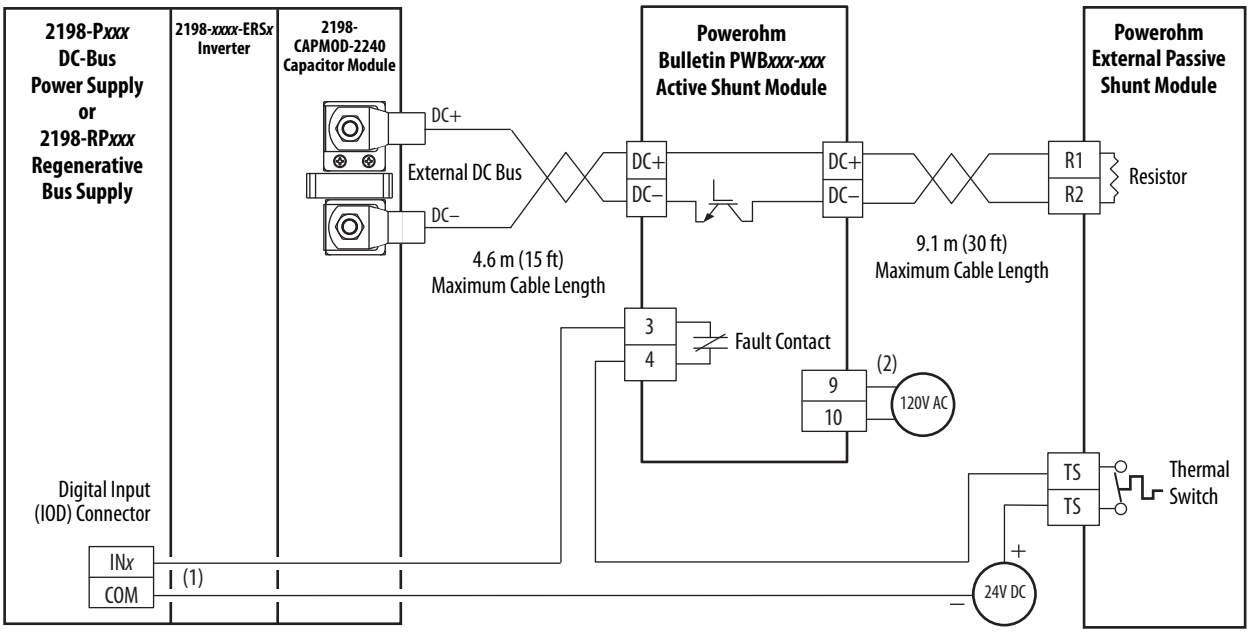

(1) Configure any available digital input as Shunt Thermal Switch OK. See the Digital Inputs Connector Pinouts on page 101.
(2) Powerohm PWB050 and PWB050-800 shunts require 120V AC between pins 9 and 10 to supply power to the cooling fans.

See Knowledgebase document 1082777 for more information on wiring to these Powerohm Bulletin PWB*xxx* active shunts.

For more information on Powerohm products, refer to the documentation included with those products or online at (http://www.powerohm.com).

Kinetix 5700 Servo Drive and Rotary Motor Wiring Examples

These Kinetix rotary motors use single cable technology. The motor power, brake, and feedback wires are all packaged in a single cable.

Figure 180 - Kinetix 5700 Drives with Kinetix VPL, VPC-B*xxxxx*-Q, VPF, VPH, and VPS Motors

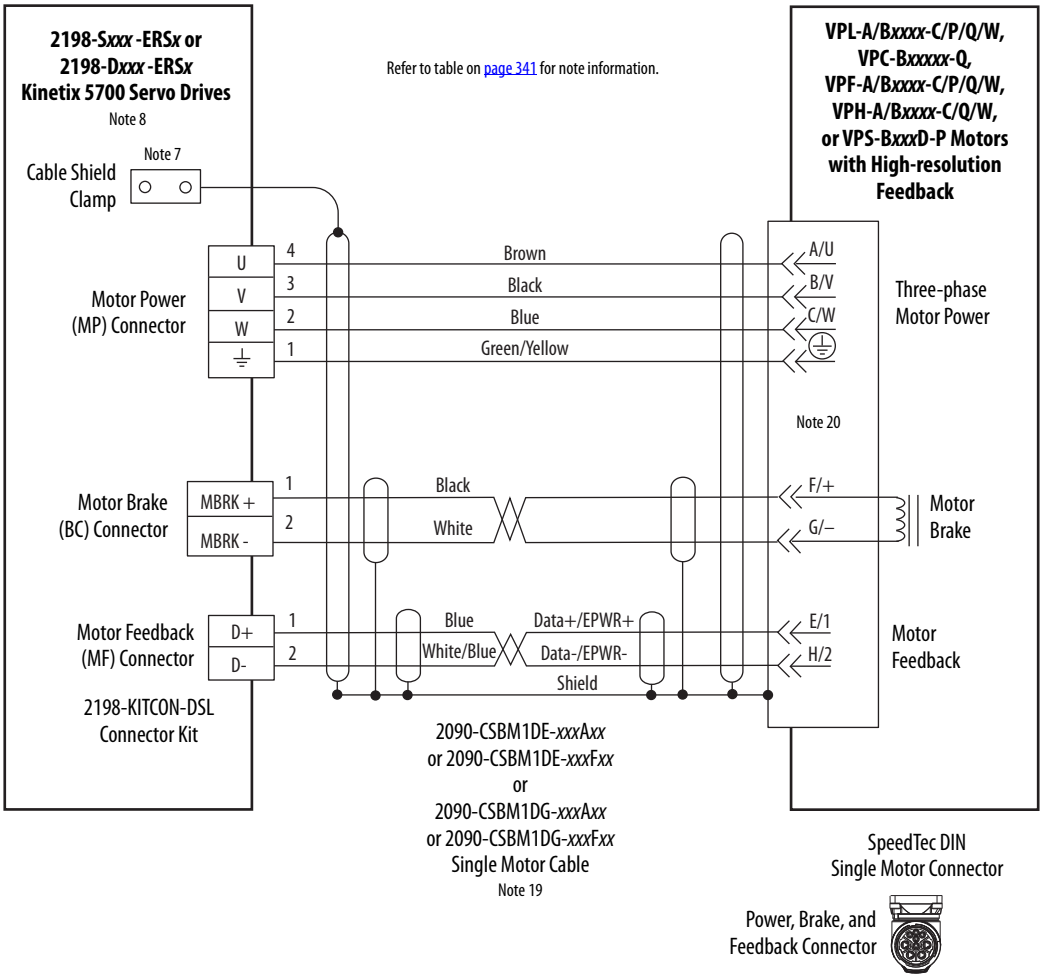

2090-CS*x*M1DE cables include the 2198-KITCON-DSL connector kit pre-assembled with the feedback conductors. 2090-CS*x*M1DG cables have flying-leads and the 2198-KITCON-DSL kit is ordered separately.

Figure 181 - Single Motor Cables for Kinetix 5700 Servo Drives

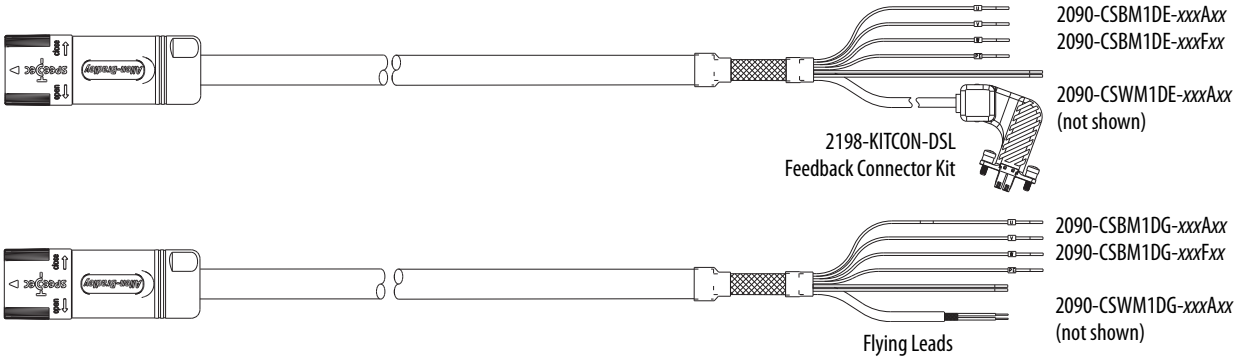

These Kinetix rotary motors have separate cables for motor power/brake and feedback connections.

Figure 182 - Kinetix 5700 Drives with Kinetix VPC-Y Continuous Duty Motors

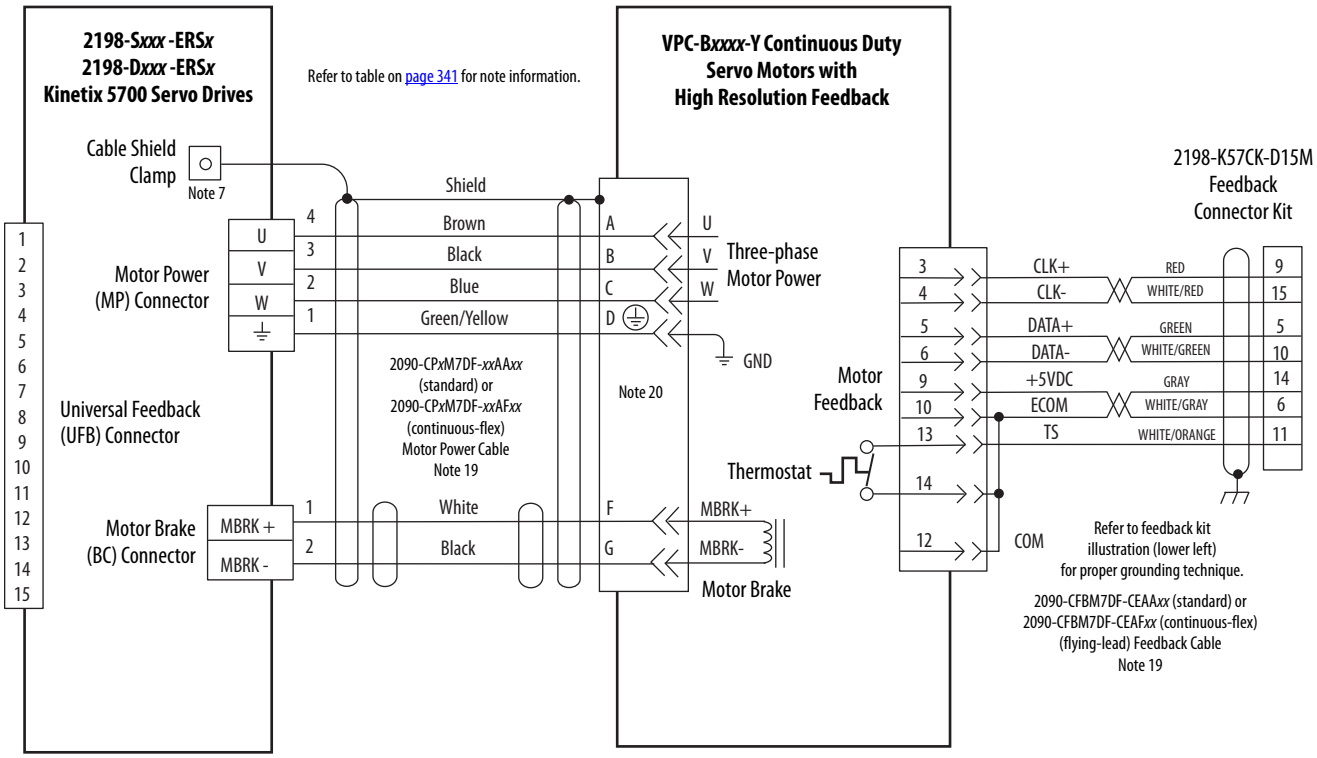

Grounding Techniques for Feedback Cable Shield

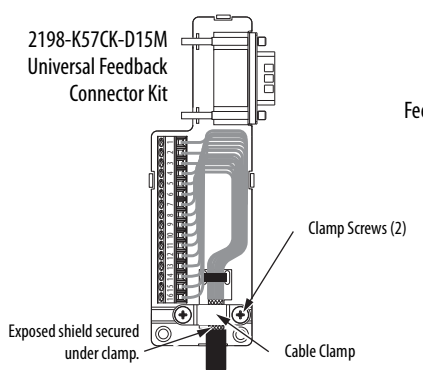

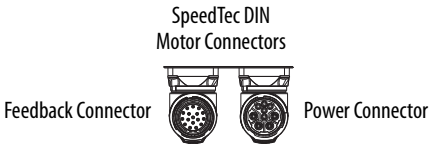

Refer to Universal Feedback Connector Kit Installation Instructions, publication 2198-IN010, for connector kit specifications.

These compatible Allen-Bradley rotary motors have separate cables for motor power/brake and feedback connections.

Figure 183 - Kinetix 5700 Drives with Kinetix MPL, MPM, MPF, MPS, and VPC Motors

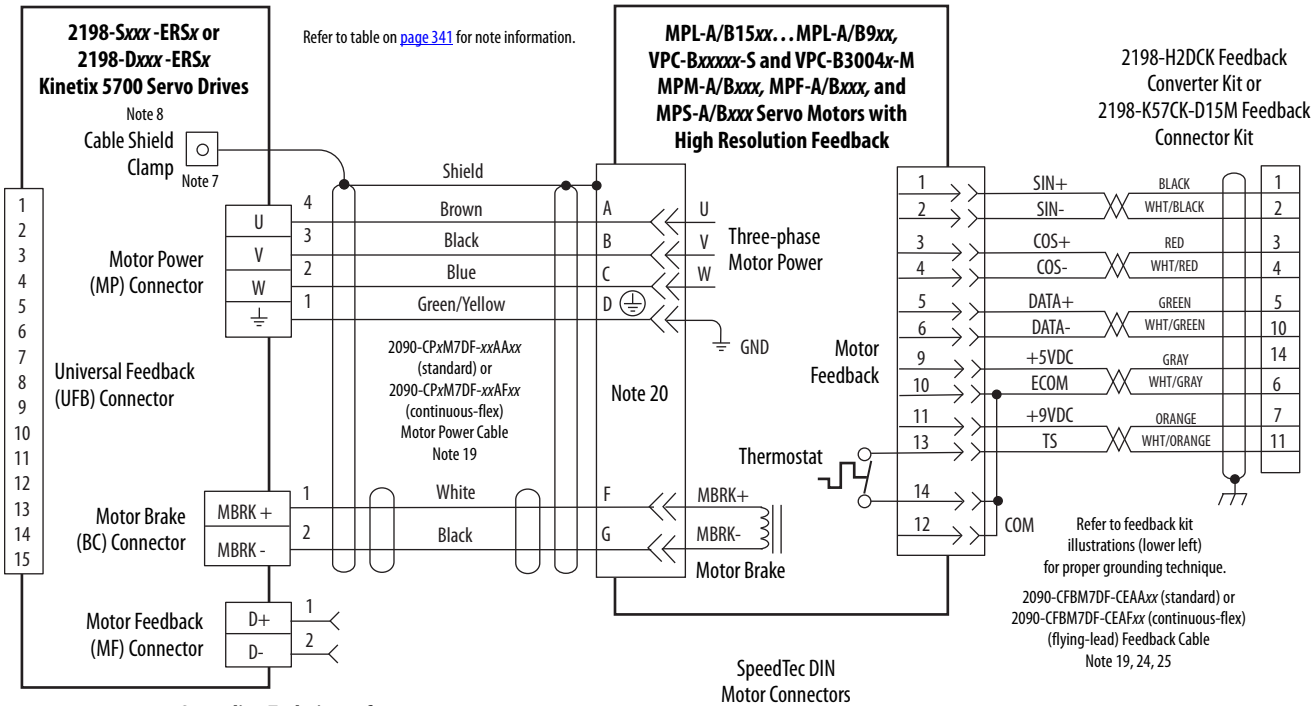

Grounding Techniques for Feedback Cable Shield

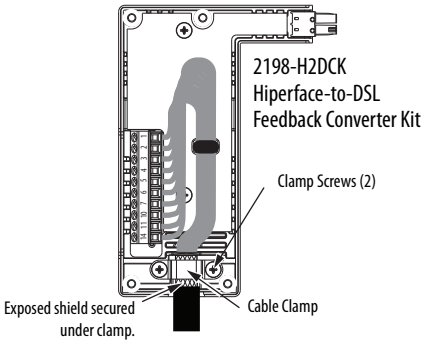

Refer to Hiperface to DSL Feedback Converter Kit Installation Instructions, publication 2198-IN006, for converter kit specifications.

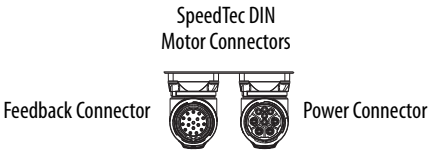

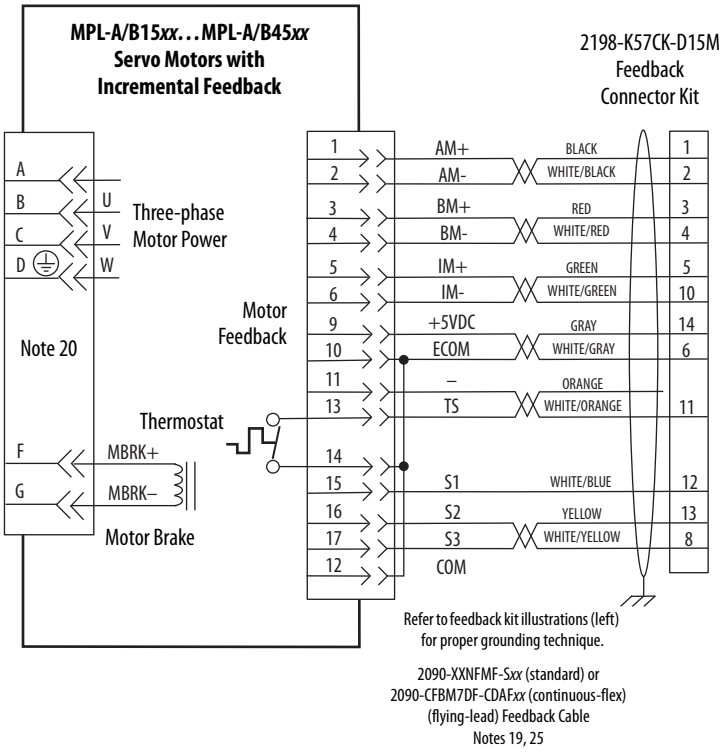

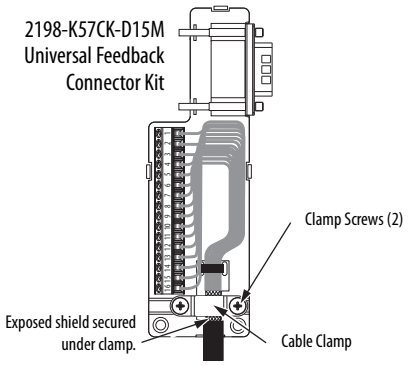

Refer to Universal Feedback Connector Kit Installation Instructions, publication 2198-IN010, for connector kit specifications.

Figure 184 - Kinetix 5700 Drives with Kinetix HPK Servo Motors

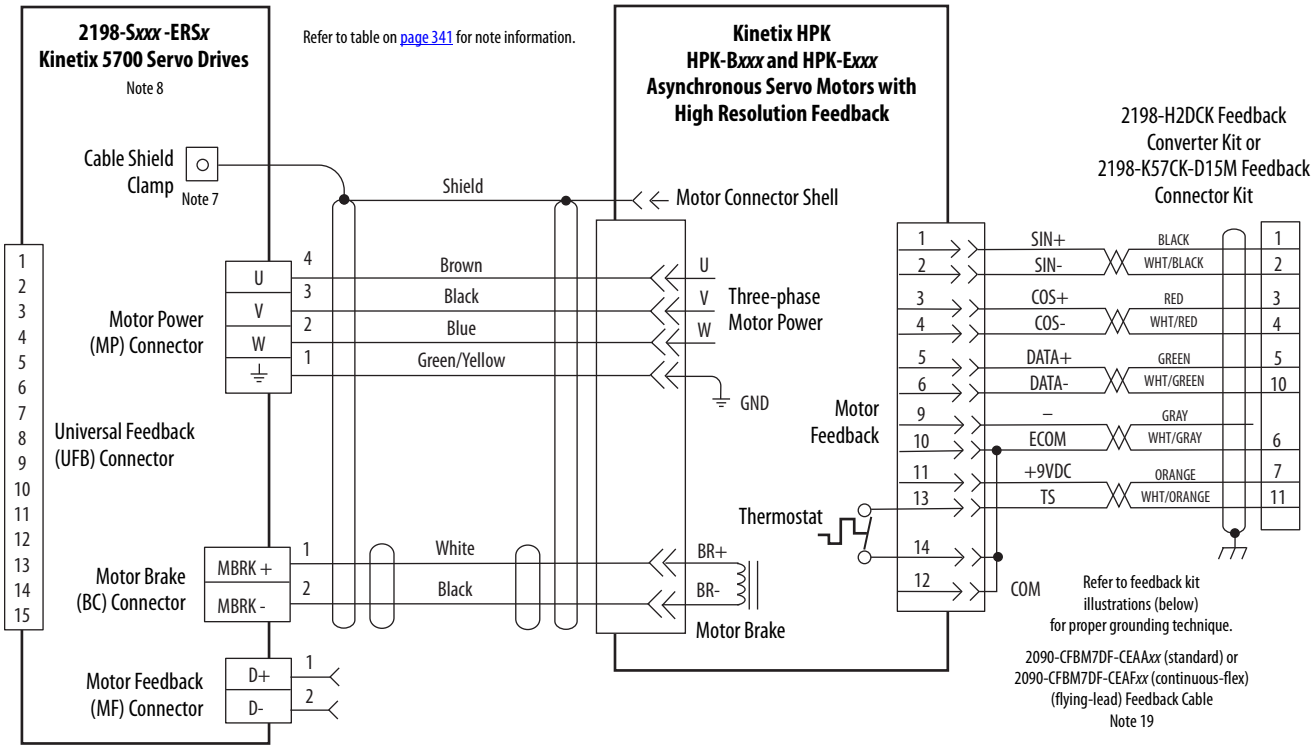

Grounding Techniques for Feedback Cable Shield

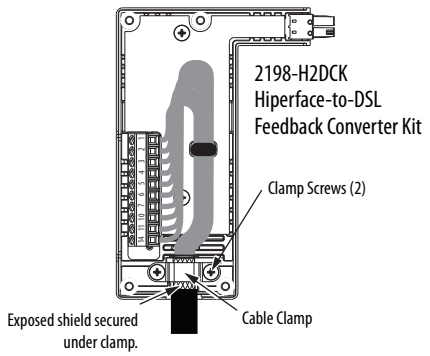

Refer to Hiperface to DSL Feedback Converter Kit Installation Instructions, publication 2198-IN006, for converter kit specifications.

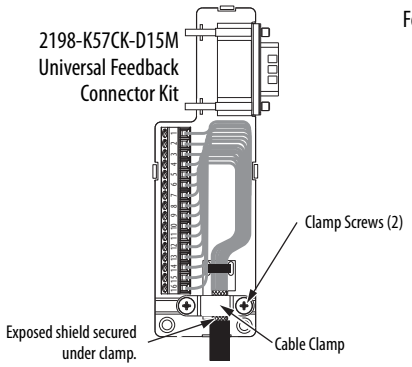

Refer to Universal Feedback Connector Kit Installation Instructions, publication 2198-IN010, for connector kit specifications.

Figure 185 - Kinetix 5700 Drives with Kinetix RDB Direct Drive Motors

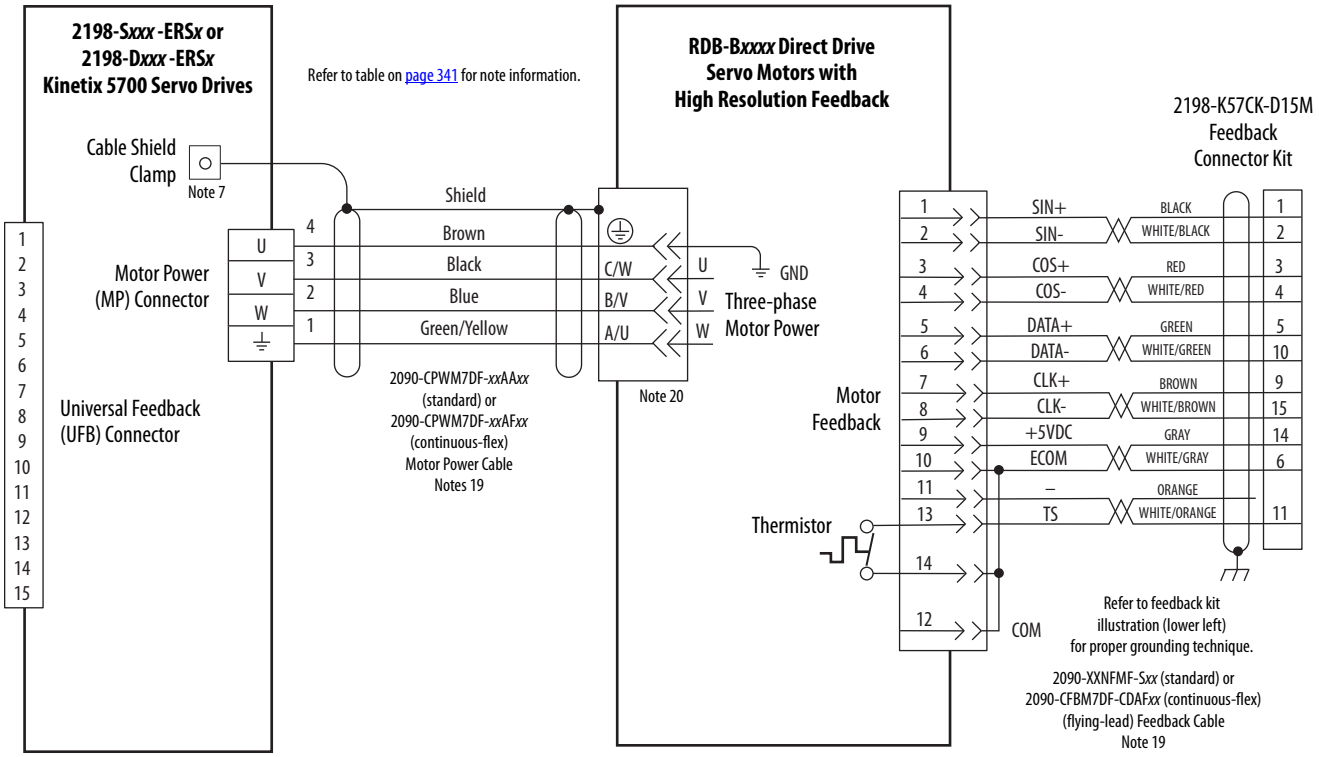

Grounding Techniques for Feedback Cable Shield

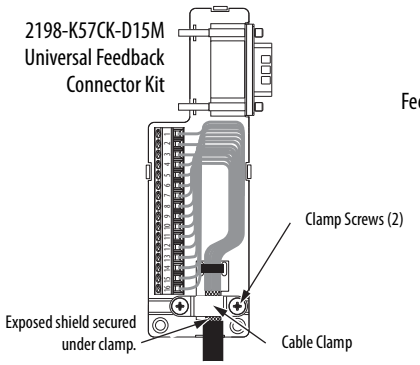

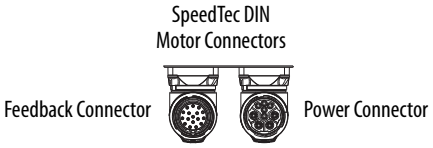

Refer to Universal Feedback Connector Kit Installation Instructions, publication 2198-IN010, for connector kit specifications.

Kinetix 5700 Servo Drive and Linear Actuator Wiring Examples

These Kinetix linear actuators use single cable technology. The motor power, brake, and feedback wires are all packaged in a single cable.

Figure 186 - Kinetix 5700 Drives with Kinetix VPAR Electric Cylinders

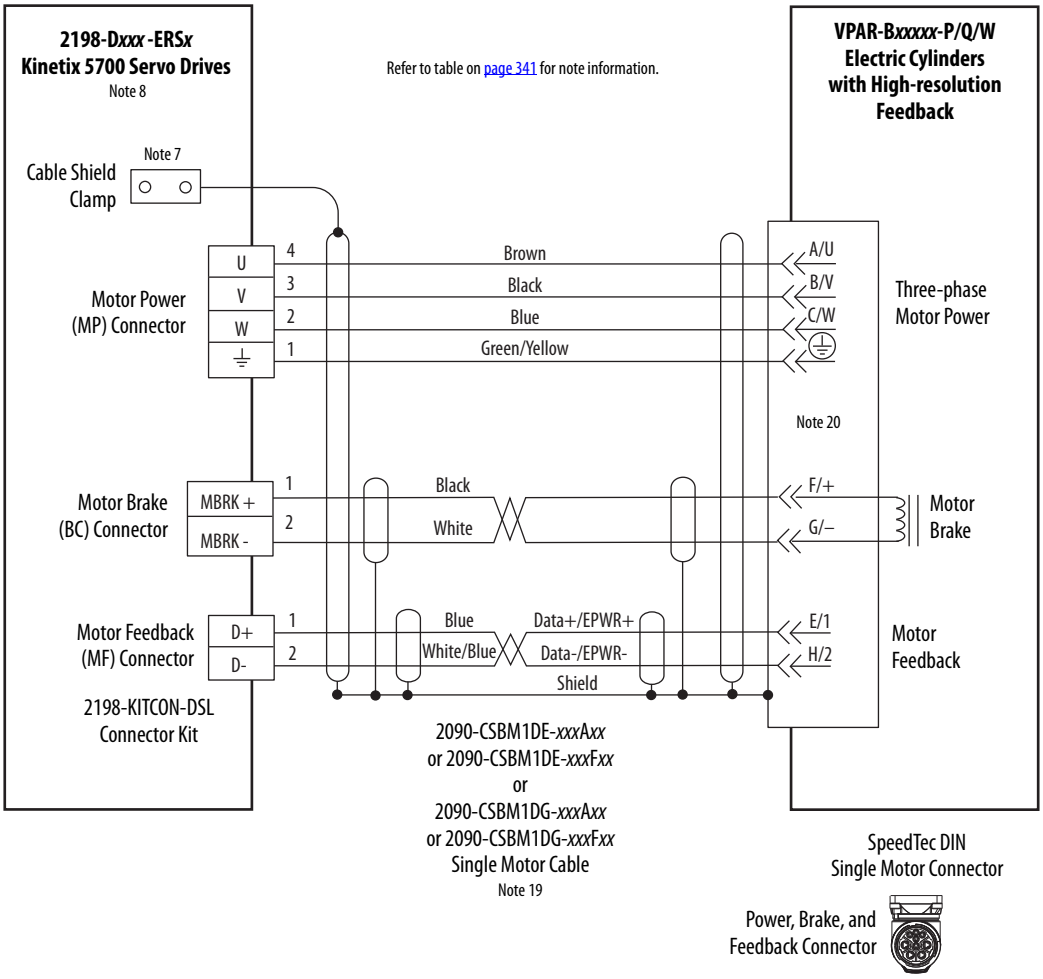

2090-CS*x*M1DE single cables include the 2198-KITCON-DSL connector kit pre-assembled with the feedback conductors. 2090-CS*x*M1DG cables have flying-leads and the 2198-KITCON-DSL kit is ordered separately. See the single cable examples on page 362.

These compatible linear actuators have separate connectors and cables for power/brake and feedback connections.

Figure 187 - Kinetix 5700 Drives with LDAT-Series Linear Thrusters

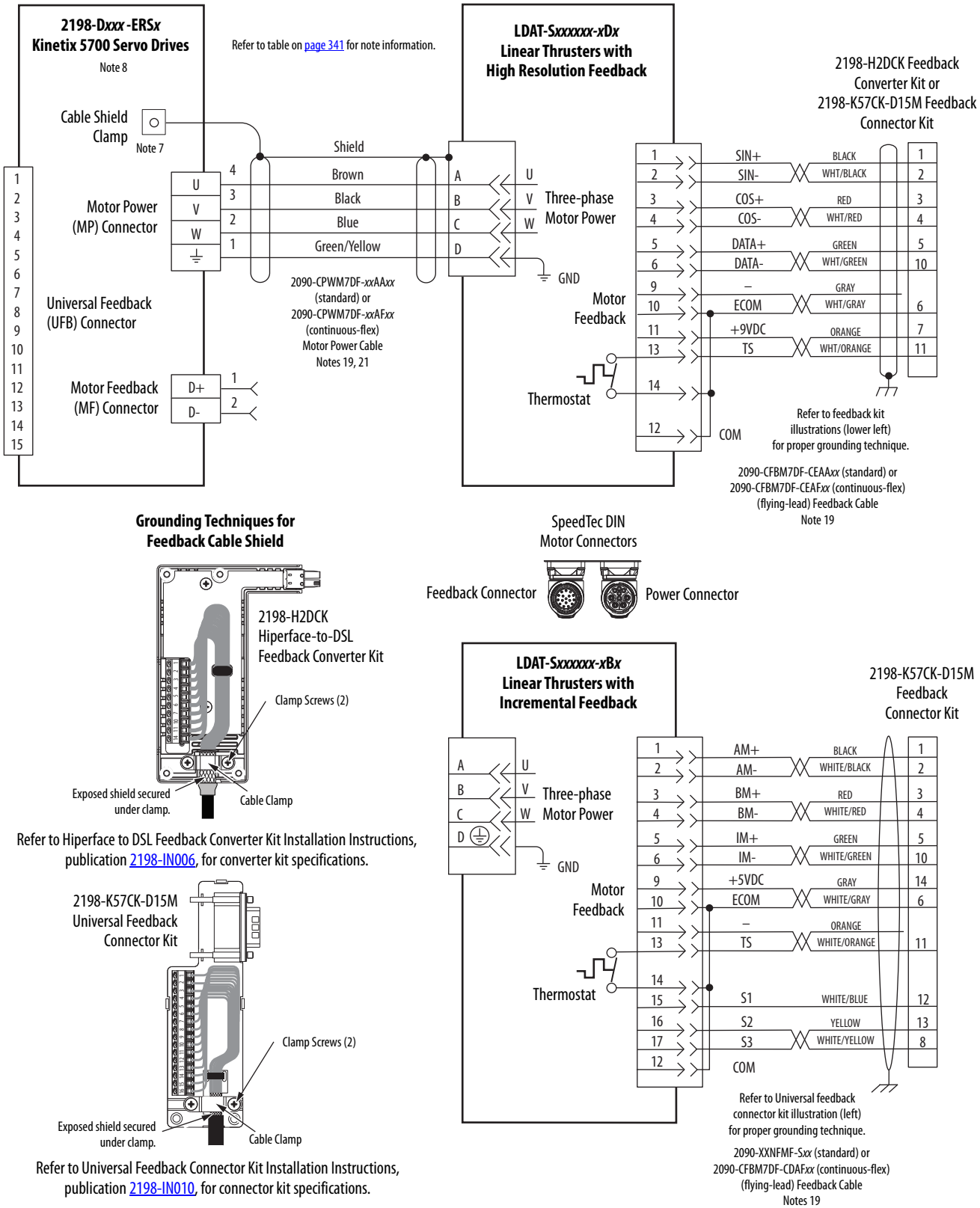

Figure 188 - Kinetix 5700 Drives with Kinetix MPAS Linear Stages

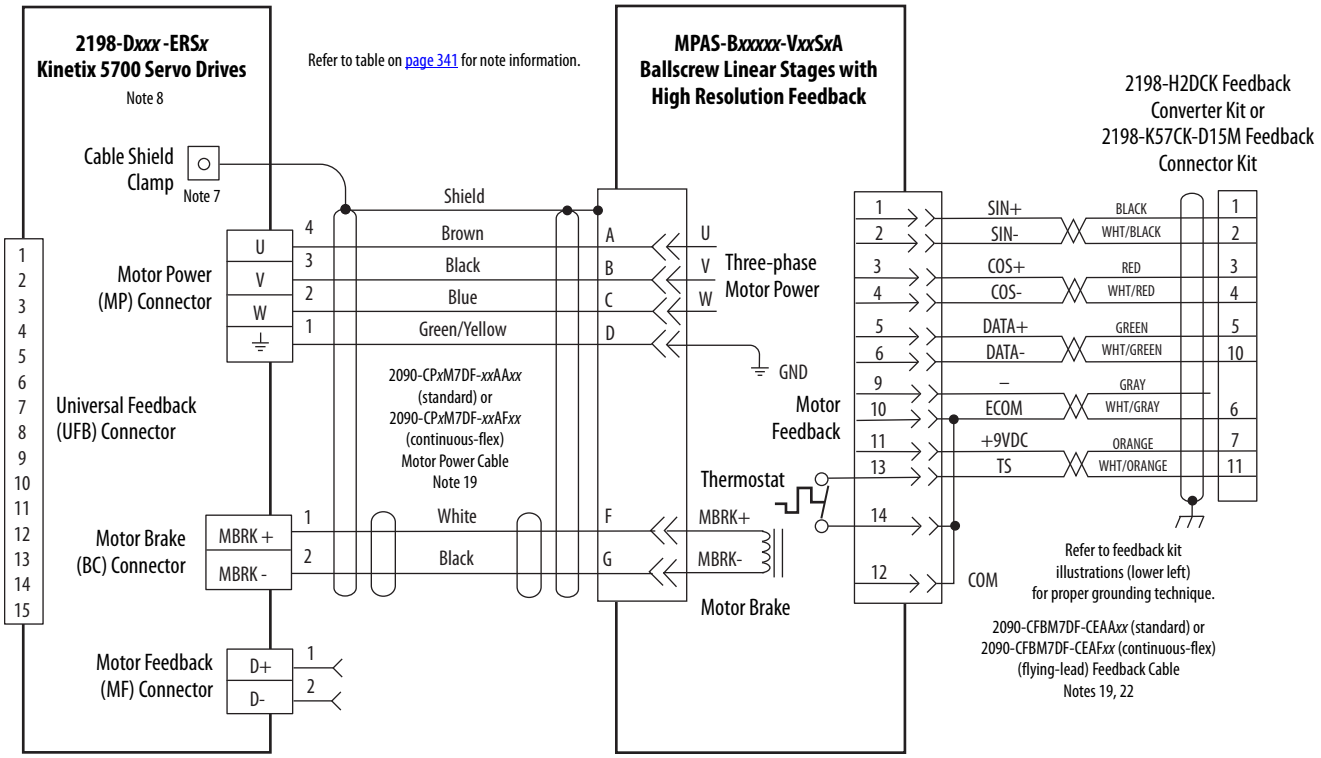

Grounding Techniques for Feedback Cable Shield

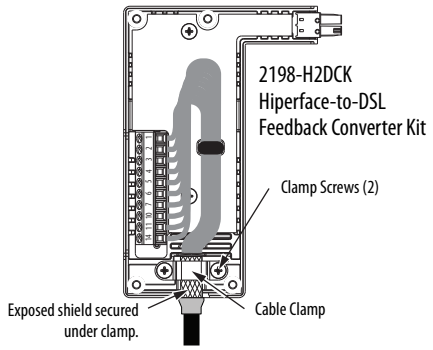

Refer to Hiperface to DSL Feedback Converter Kit Installation Instructions, publication 2198-IN006, for converter kit specifications.

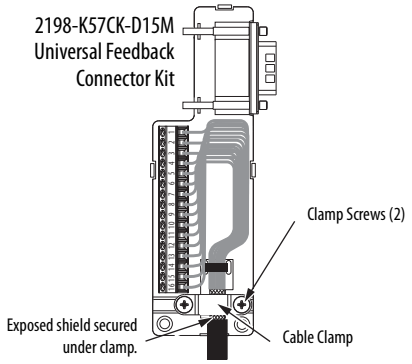

Refer to Universal Feedback Connector Kit Installation Instructions, publication 2198-IN010, for connector kit specifications.

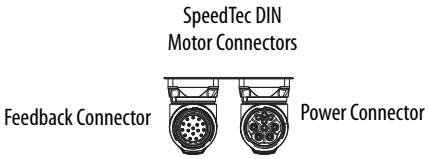

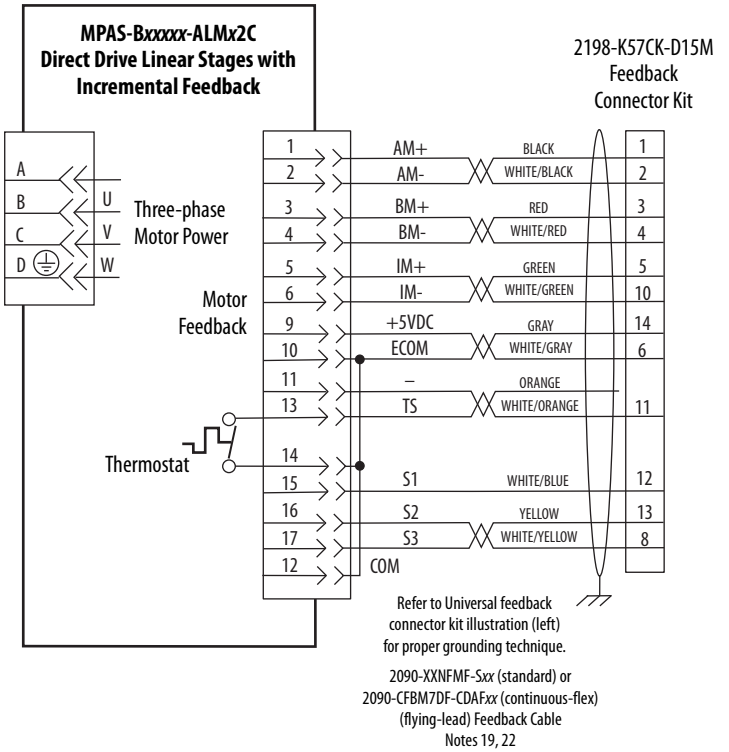

Figure 189 - Kinetix 5700 Drives with Kinetix MPAR and MPAI Electric Cylinders

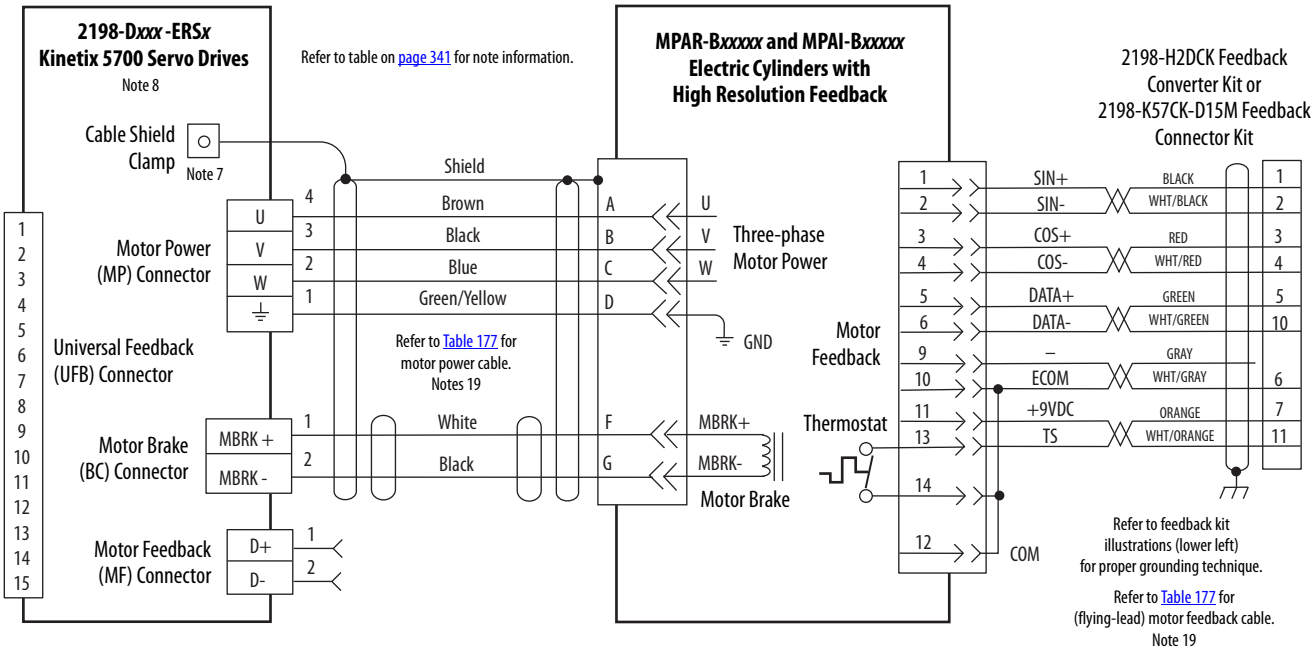

Grounding Techniques for Feedback Cable Shield

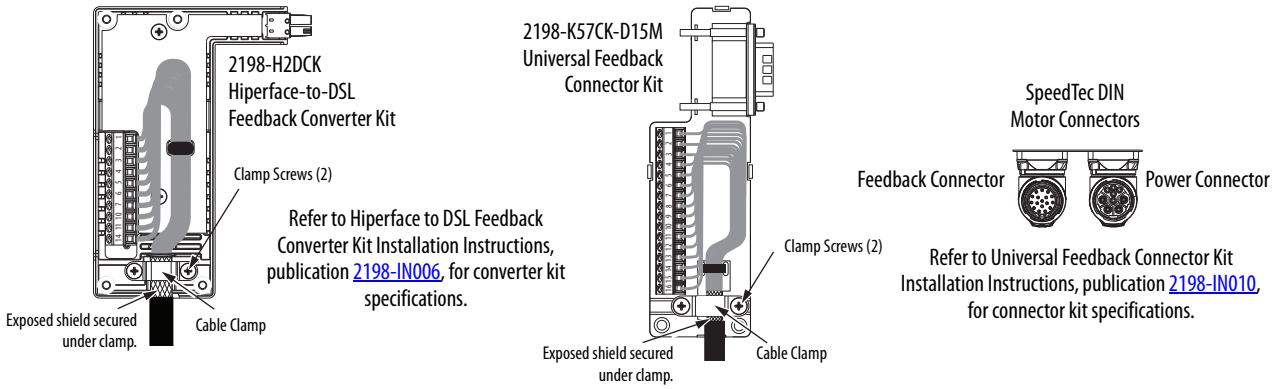

Table 177 - Kinetix MPAR and MPAI Electric Cylinders Power and Feedback Cables

Kinetix MPAR and MPAI Electric Cylinders Cat. No.	Frame	Power Cable Cat. No.	Feedback Cable Cat. No.
MPAR-B1*xxx* (series A and B)	32	2090-XXNPMF-16S*xx* (standard) or 2090-CP*x*M4DF-16AF*xx* (continuous-flex)	2090-XXNFMF-S*xx* (standard) or 2090-CFBM4DF-CDAF*xx* (continuous-flex)
MPAR-B2*xxx* (series A and B)	40		
MPAR-B1*xxx* (series B and C)	32	2090-CP*x*M7DF-16AA*xx* (standard) or 2090-CP*x*M7DF-16AF*xx* (continuous-flex)	2090-CFBM7DF-CEAA*xx* (standard) or 2090-CFBM7DF-CEAF*xx* (continuous-flex)
MPAR-B2*xxx* (series B and C)	40		
MPAR-B3*xxx*	63		
MPAI-B2*xxxx*	64		
MPAI-B3*xxxx*	83		
MPAI-B4*xxxx*	110		
MPAI-B5*xxxx*	144		

Figure 190 - Kinetix 5700 Drives with LDC-Series Linear Motors (cable connectors)

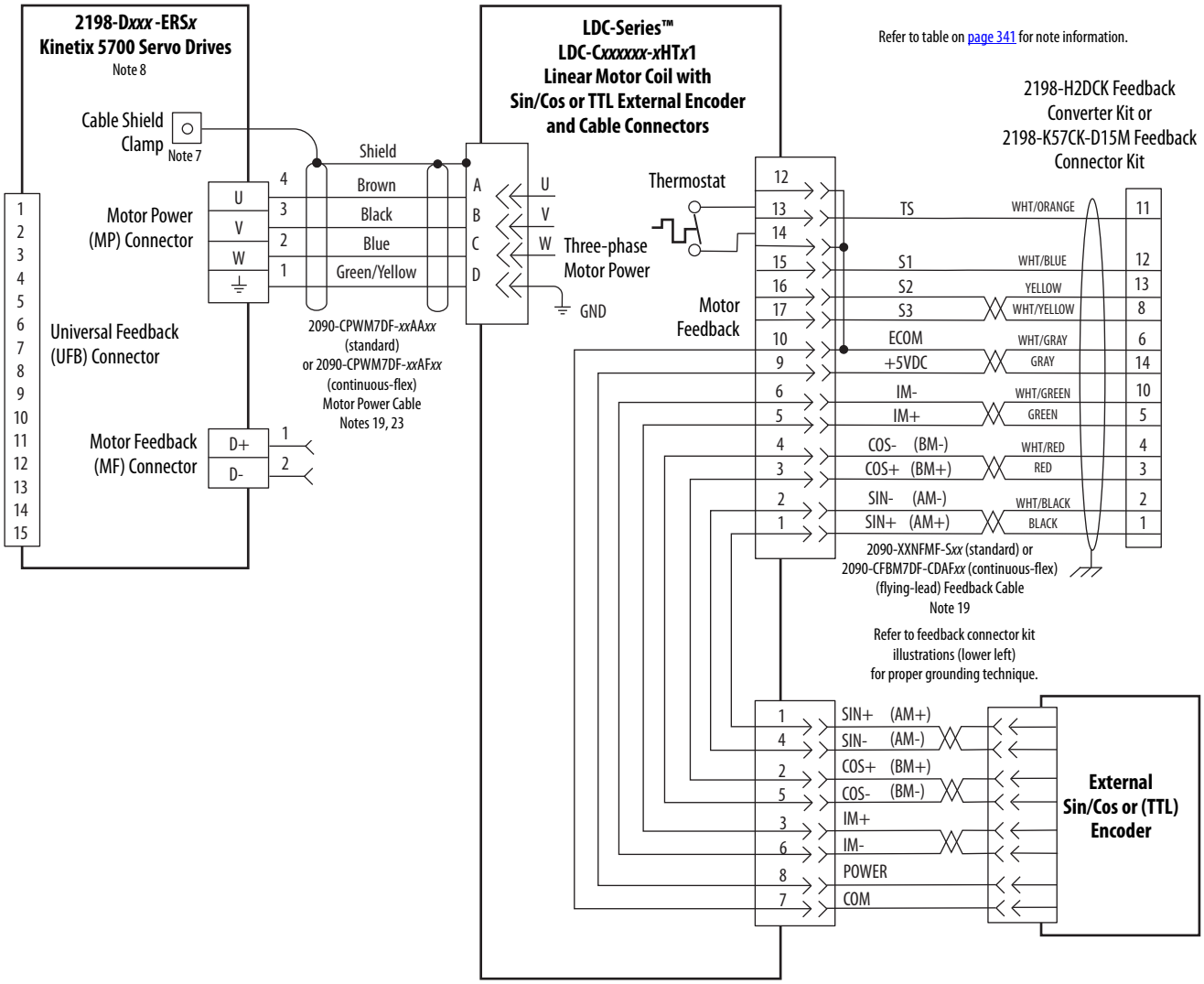

Grounding Techniques for Feedback Cable Shield

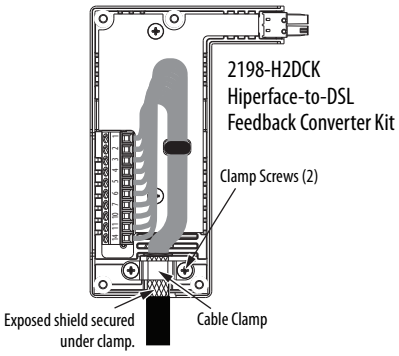

Refer to Hiperface to DSL Feedback Converter Kit Installation Instructions, publication 2198-IN006, for converter kit specifications.

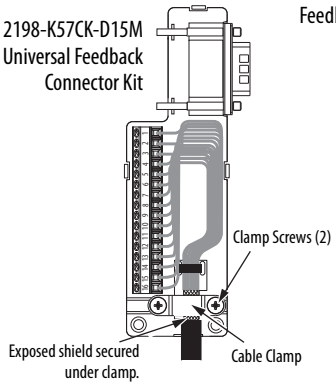

Refer to Universal Feedback Connector Kit Installation Instructions, publication 2198-IN010, for connector kit specifications.

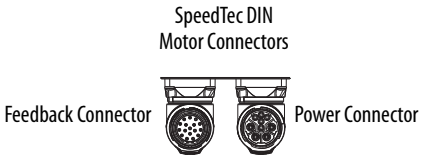

Figure 191 - Kinetix 5700 Drives with LDC-Series Linear Motors (flying-lead cables)

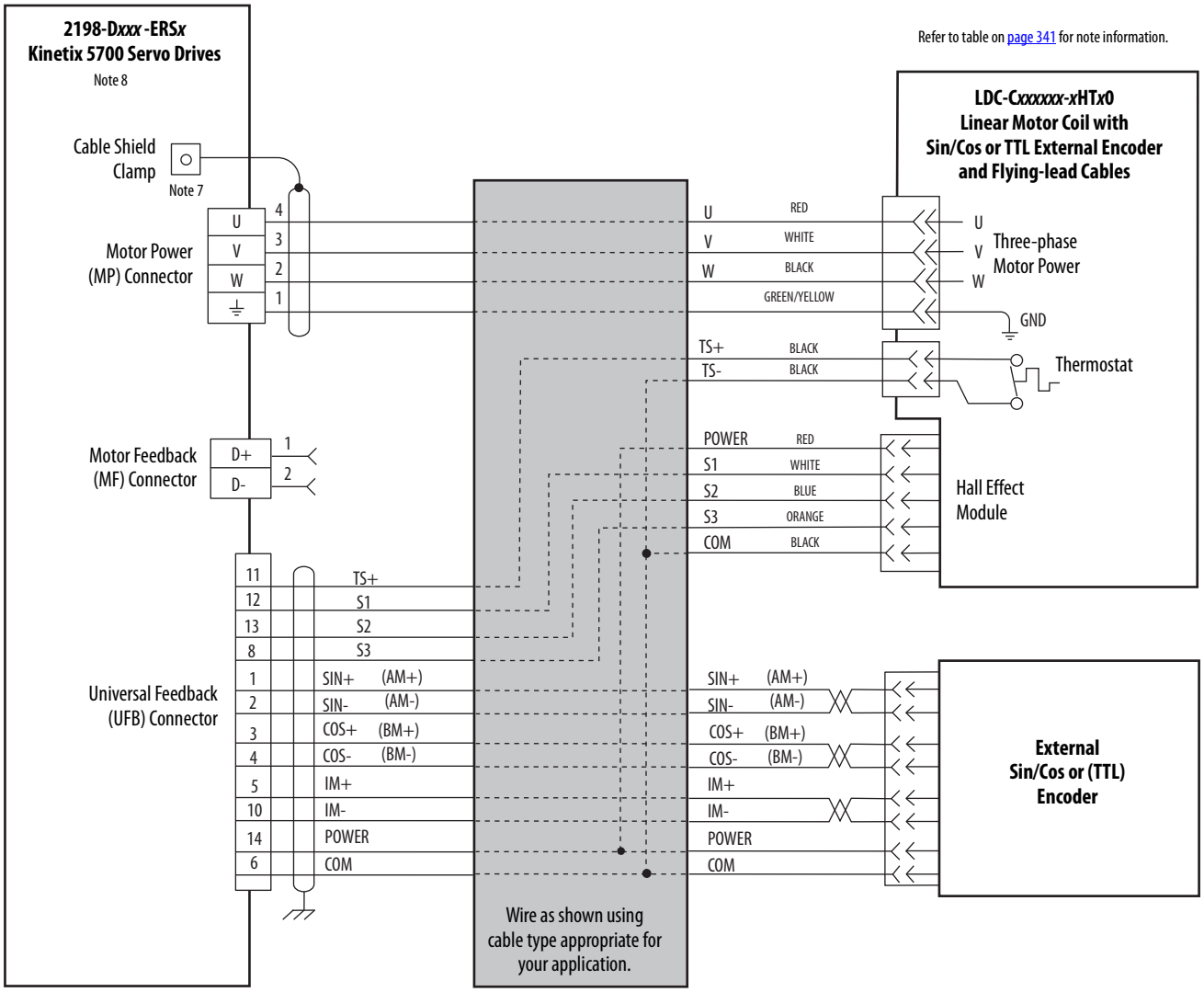

Grounding Techniques for Feedback Cable Shield

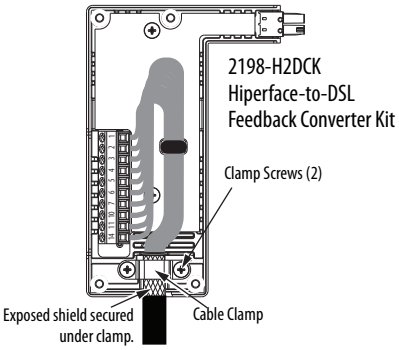

Refer to Hiperface to DSL Feedback Converter Kit Installation Instructions, publication 2198-IN006, for converter kit specifications.

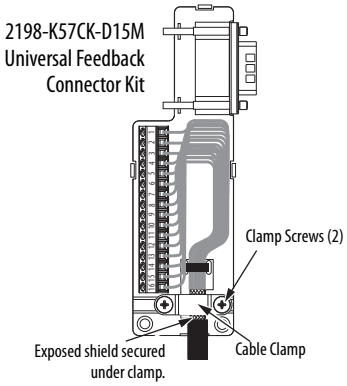

Refer to Universal Feedback Connector Kit Installation Instructions, publication 2198-IN010, for connector kit specifications.

System Block Diagrams

This section provides block diagrams of the Kinetix 5700 drive modules.

Figure 192 - DC-bus Power Supply Block Diagram

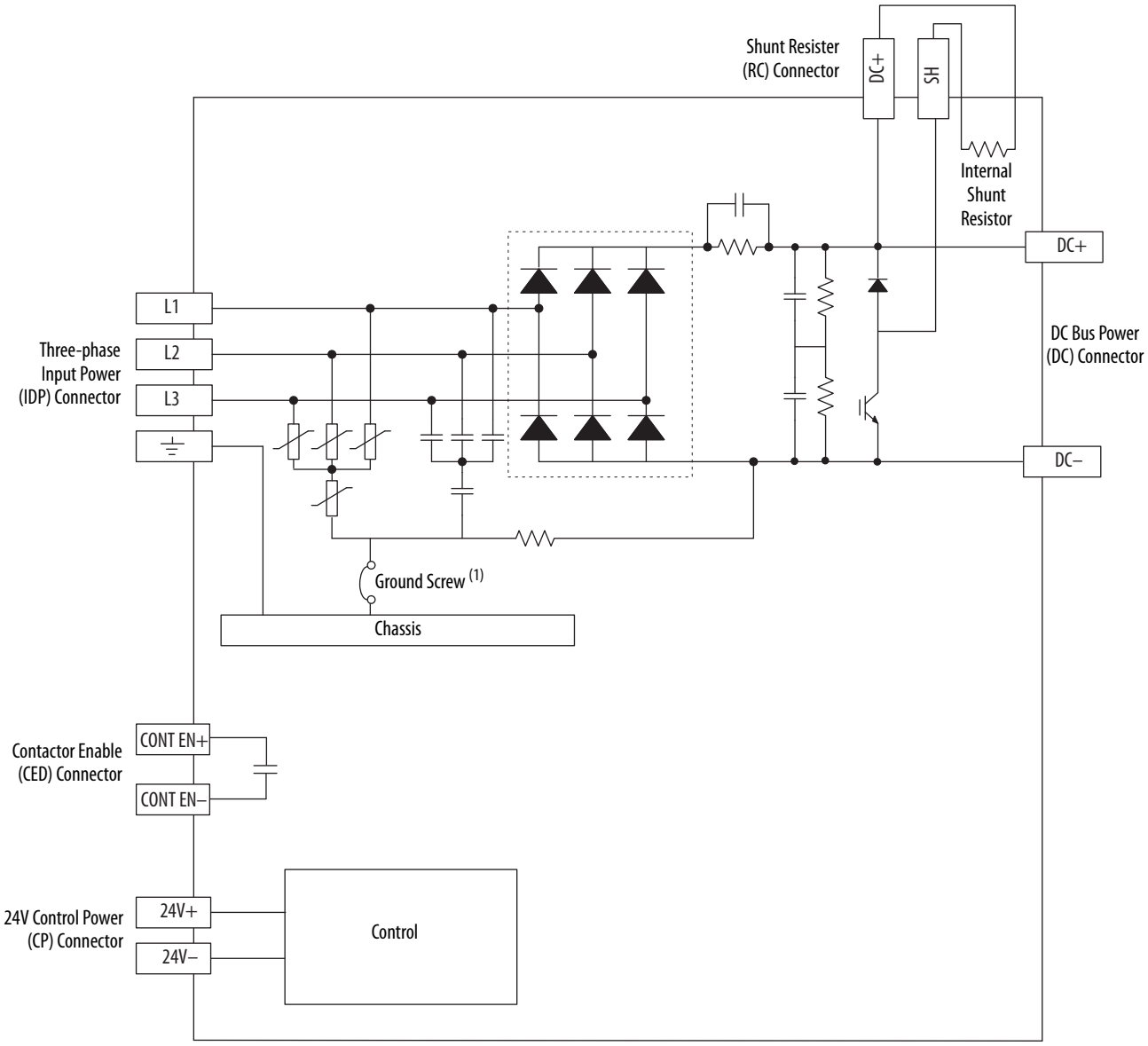

(1) Ground screw in the installed (default) configuration.

Figure 193 - Regenerative Bus Supply Block Diagram

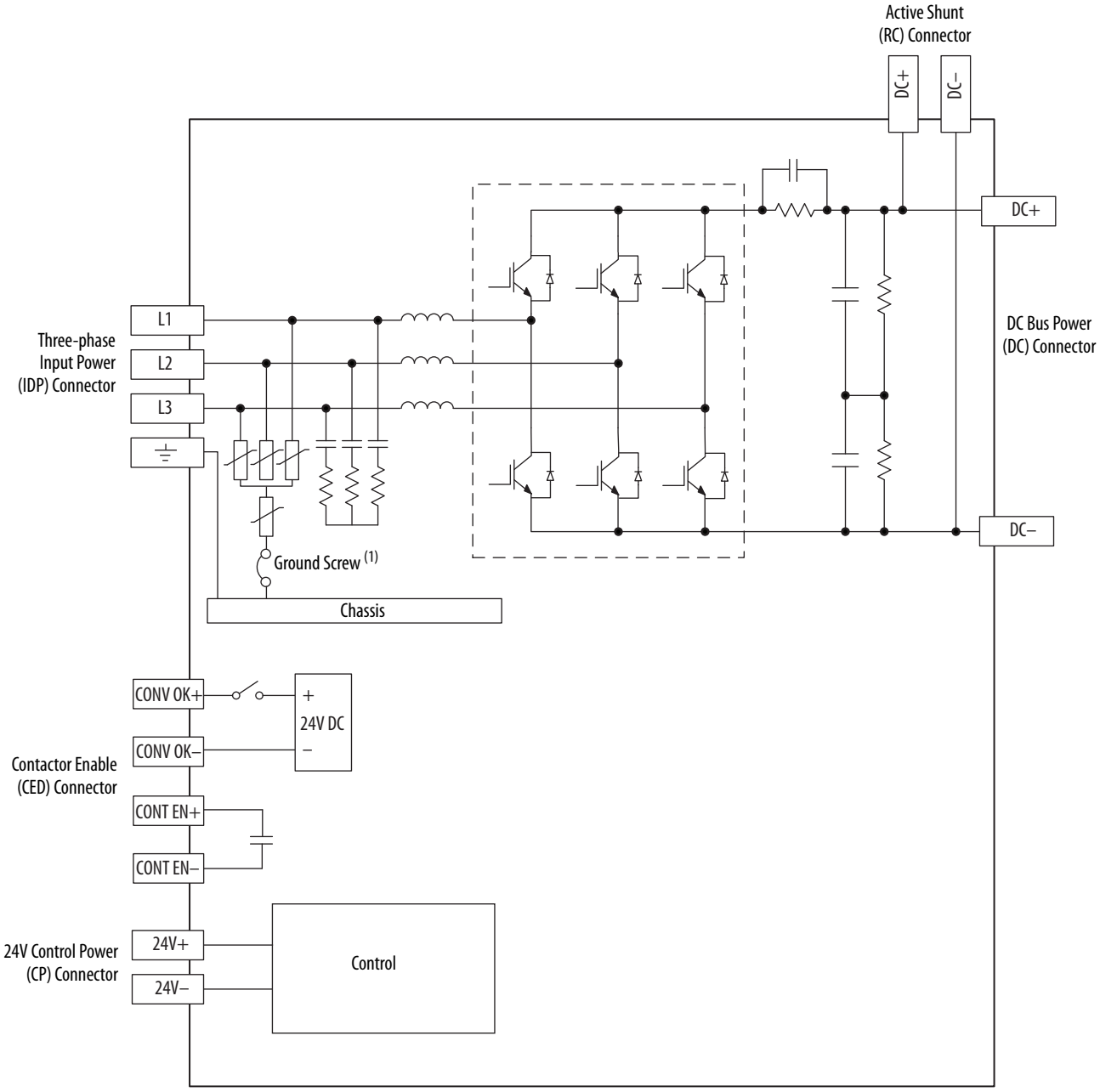

(1) Ground screw in the installed (default) configuration.

Figure 194 - Single-axis Inverter Block Diagram

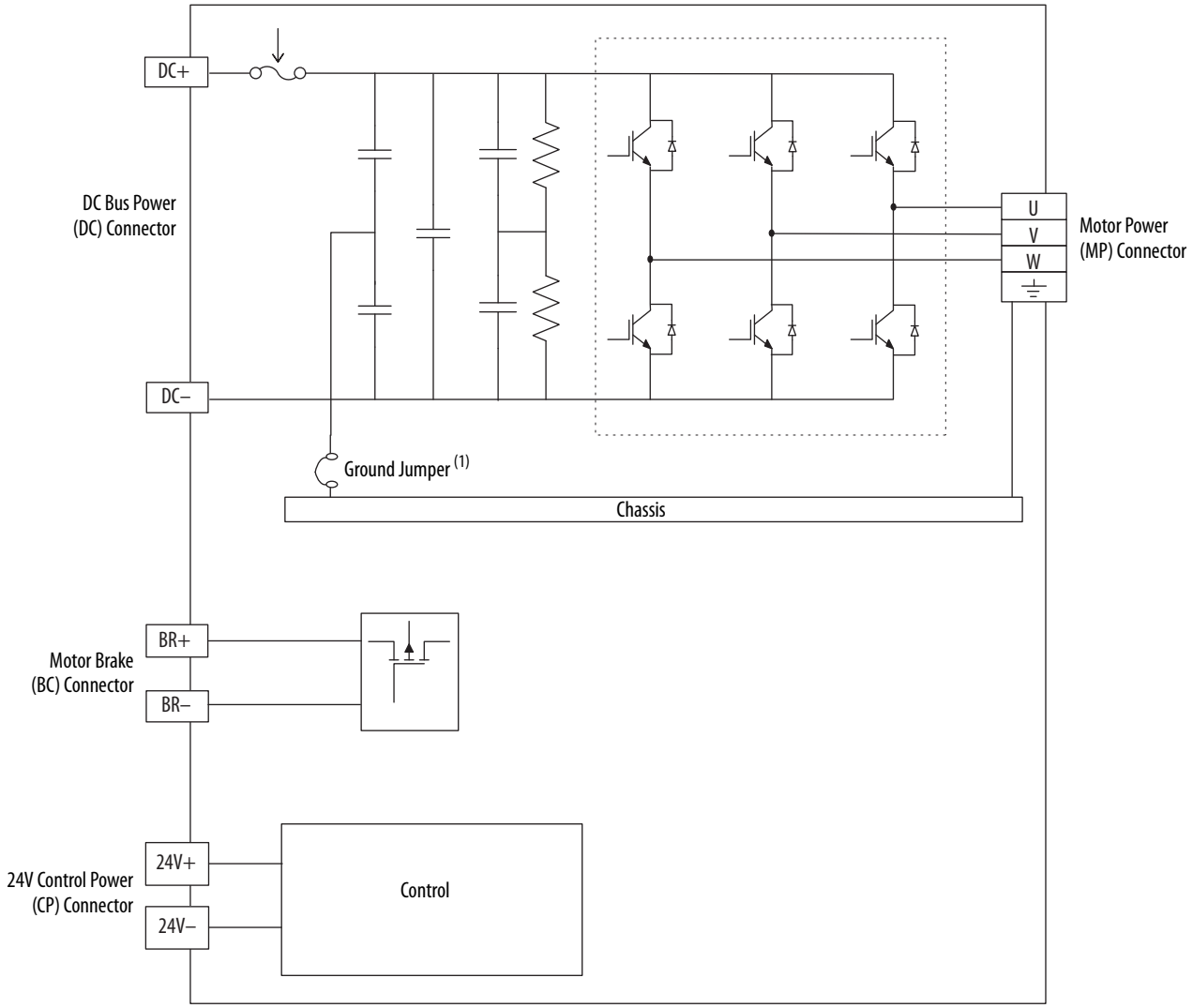

(1) Ground jumper installed on 2198-S*xxx*-ERS3 (series A) drives.
Ground jumper removed on 2198-S*xxx*-ERS4 and 2198-S*xxx*-ERS3 (series B) drives.

Figure 195 - Dual-axis Inverter Block Diagram

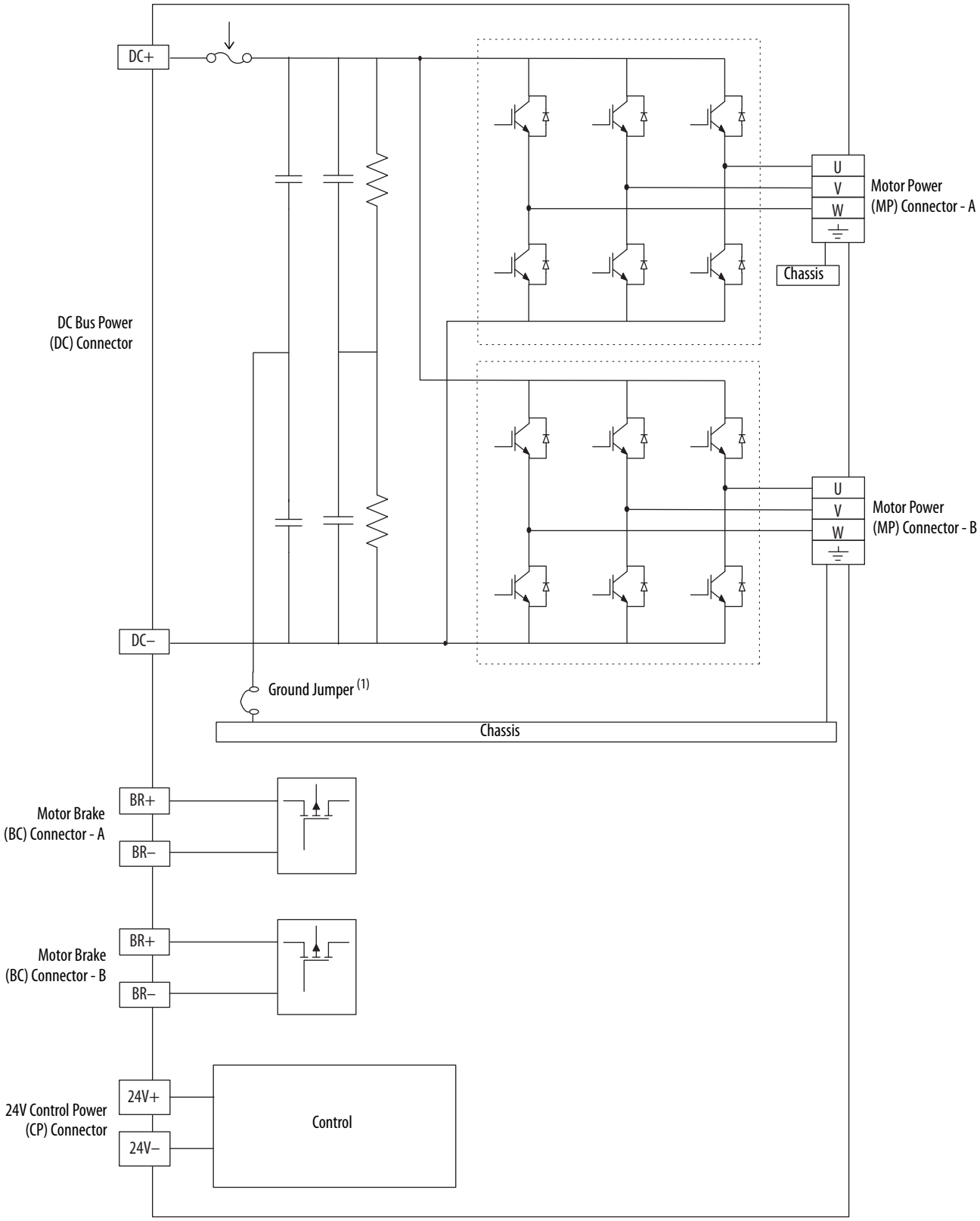

(1) Ground jumper installed on 2198-S*xxx*-ERS3 (series A) drives.
Ground jumper removed on 2198-S*xxx*-ERS4 and 2198-S*xxx*-ERS3 (series B) drives.

Figure 196 - iTRAK Power Supply Block Diagram

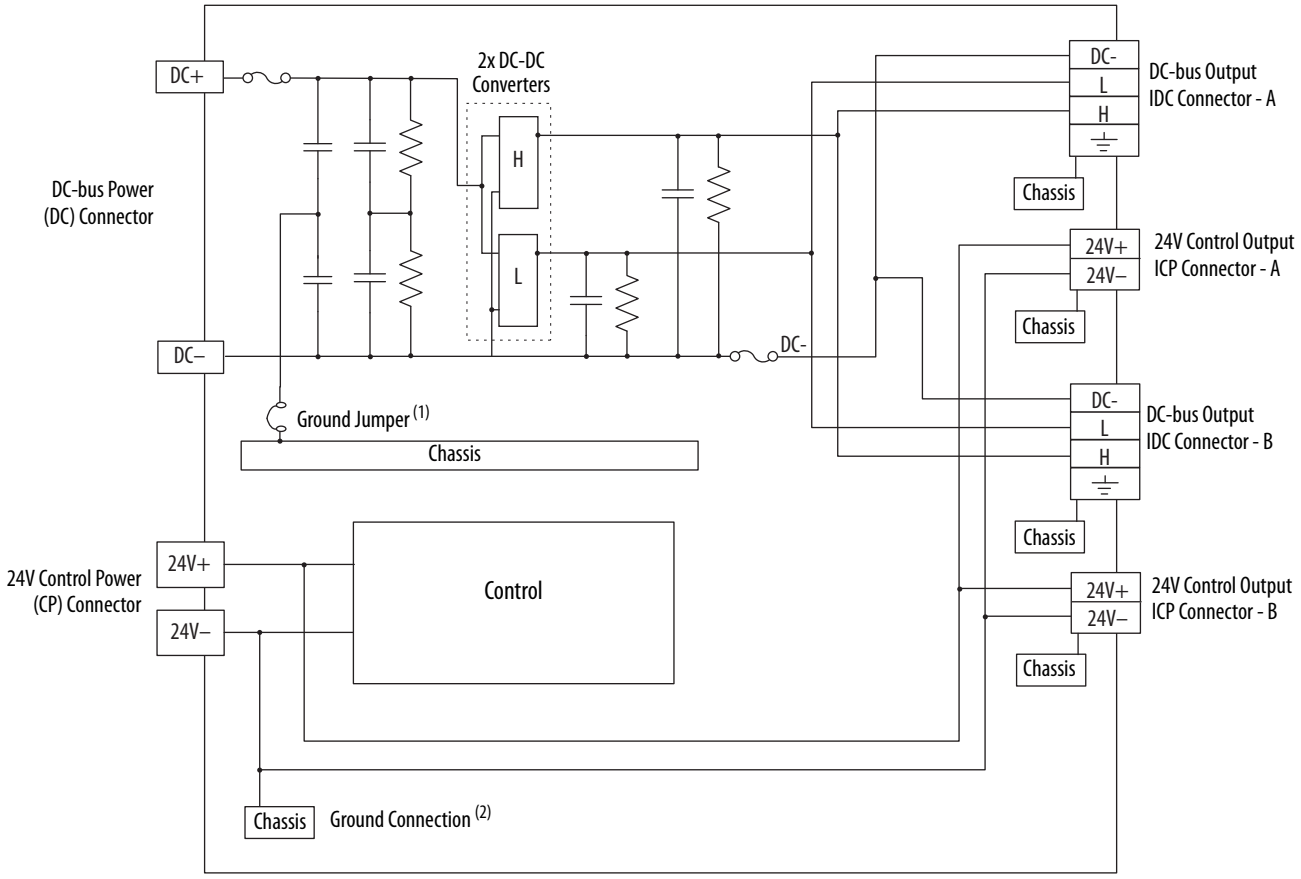

(1) Ground screw in the installed (default) configuration.
(2) Connection from 24V- to Chassis is made inside of the iTRAK power supply.

Figure 197 - Capacitor Module Block Diagram

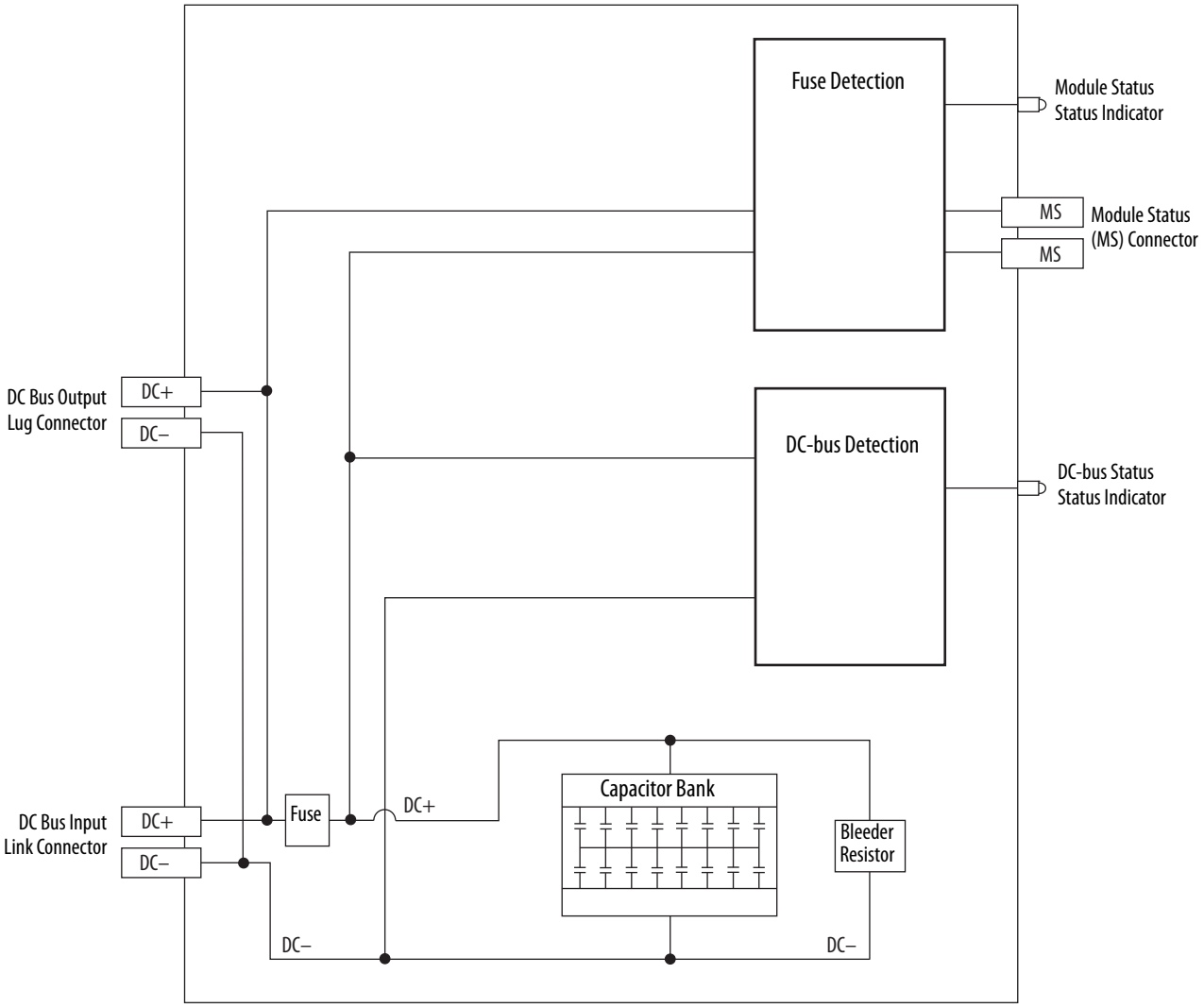

Figure 198 - DC-bus Conditioner Module Block Diagram

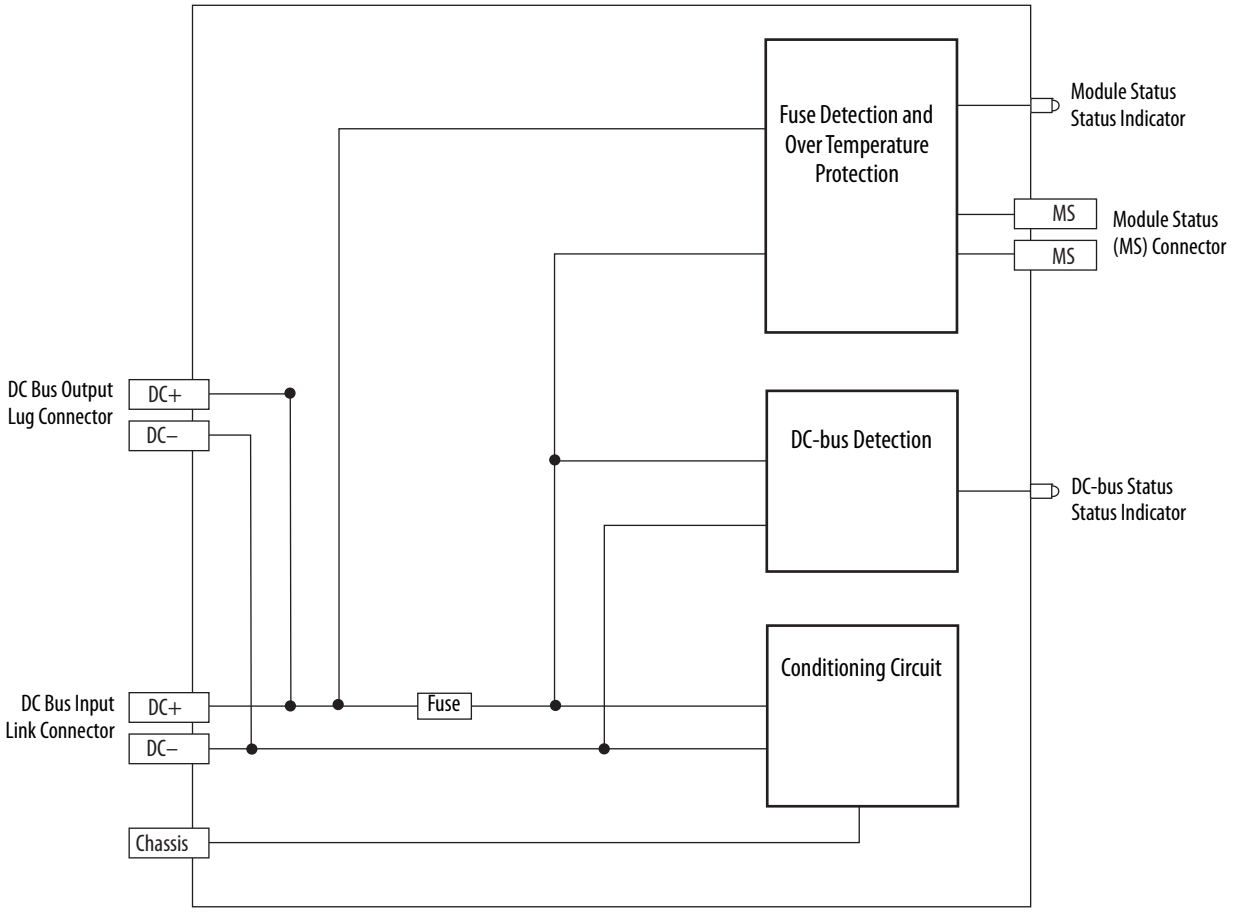

Notes:

Upgrade the Drive Firmware

This appendix provides procedures for upgrading your Kinetix® 5700 drive firmware.

Topic	Page
Before You Begin	381
Upgrade Your Firmware	383
Verify the Firmware Upgrade	393

You can upgrade your Kinetix 5700 drive firmware by using either of these two methods:

- ControlFLASH Plus™ software
- ControlFLASH™ software

To upgrade drive firmware, you must configure a path to your drive, select the drive module to upgrade, and complete the firmware upgrade procedure.

TIP We recommend that you use ControlFLASH Plus software for firmware upgrades. See the ControlFLASH Plus Quick Start Guide, publication CFP-QS001, for more information.

Before You Begin

For firmware upgrades, you must use the following software revisions.

Table 178 - Kinetix 5700 System Requirements

Description	Firmware Revision
Logix Designer application	26.00.00 or later
RSLinx® software (1)	3.60.00 or later
FactoryTalk® Linx software (2)	6.20.00 or later
ControlFLASH software kit (3)	12.01.00 or later
ControlFLASH Plus software kit (3)	3.01 or later

(1) Required only when using ControlFLASH software.
(2) Required only when using ControlFLASH Plus software.
(3) Download the ControlFLASH software kit from the Product Compatibility and Download Center at: rok.auto/pcdc. For more ControlFLASH software information (not Kinetix 5700 specific), refer to the ControlFLASH Firmware Upgrade Kit User Manual, publication 1756-UM105.

Gather this information before you begin your firmware upgrade.

- Network path to the targeted Kinetix 5700 drives you want to upgrade.
- Catalog numbers of the targeted Kinetix 5700 drives you want to upgrade.

IMPORTANT Control power must be present at CP-1 (24V+) and CP-2 (24V-) prior to upgrading your target module.

IMPORTANT For the DC-bus power supply and inverter modules, the axis state on the LCD display must be STANDBY, CONFIGURING, or PRECHARGE before beginning this procedure.

IMPORTANT The axis state on the LCD display must be STANDBY, when Protected mode is enabled. See Table 109 on page 189 for more information.

IMPORTANT For iTRAK® power supplies configured for normal (non-standalone) operation, the axis state on the LCD display must be in the STANDBY state. If Protected Flash Update is disabled in the Settings Menu, the device can also be in either the CONFIGURING or PRECHARGE state. See Table 112 on page 192 for more information.

IMPORTANT For iTRAK power supplies configured for standalone operation, the axis state on the LCD display must be in the START INHIBITED state. See iTRAK System with TriMax Bearings User Manual, publication 2198T-UM002, for information on upgrading firmware on iTRAK L16 motor modules.

ATTENTION: To avoid personal injury or damage to equipment during the firmware upgrade due to unpredictable motor activity, do not apply three-phase AC or common-bus DC input power to the drive.

Inhibit the Module

You must inhibit the Kinetix 5700 drive prior to performing the firmware upgrade. Follow these steps to inhibit a module.

1. Open your Logix Designer application.
2. Right-click the 2198-*xxxx*-ERS*x* servo drive you configured and choose Properties.

   The Module Properties dialog box appears.

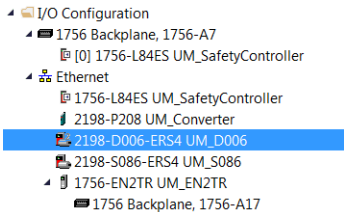

3. Select the Connection category.

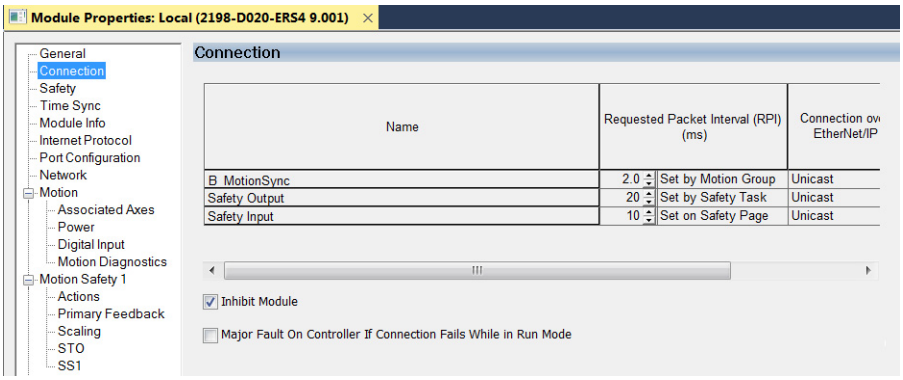

4. Check Inhibit Module.
5. Click OK.
6. Save your file and download the program to the controller.
7. Verify that the network (NET) and module (MOD) status indicators are flashing green.

Upgrade Your Firmware

Use either ControlFLASH Plus software or ControlFLASH software to upgrade your firmware.

Table 179 - Firmware Upgrade Software

Software Upgrade Procedure	Go to Page
ControlFLASH Plus	384
ControlFLASH	387

Use ControlFLASH Plus Software to Upgrade Your Drive Firmware

Follow these steps to select the Kinetix 5700 drive to upgrade.

1. Start ControlFLASH Plus software.

   TIP You can choose to select and upgrade the firmware for all drive modules in your system. However, in this procedure only one drive is selected for a firmware upgrade.

2. Click the Flash Devices tab. If the device is not already present in Browsing from path:, complete these steps:

   a. Click .

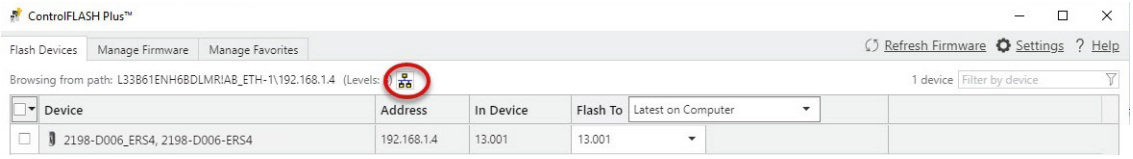

   b. In the Network Browser dialog box, locate and select the device to upgrade.

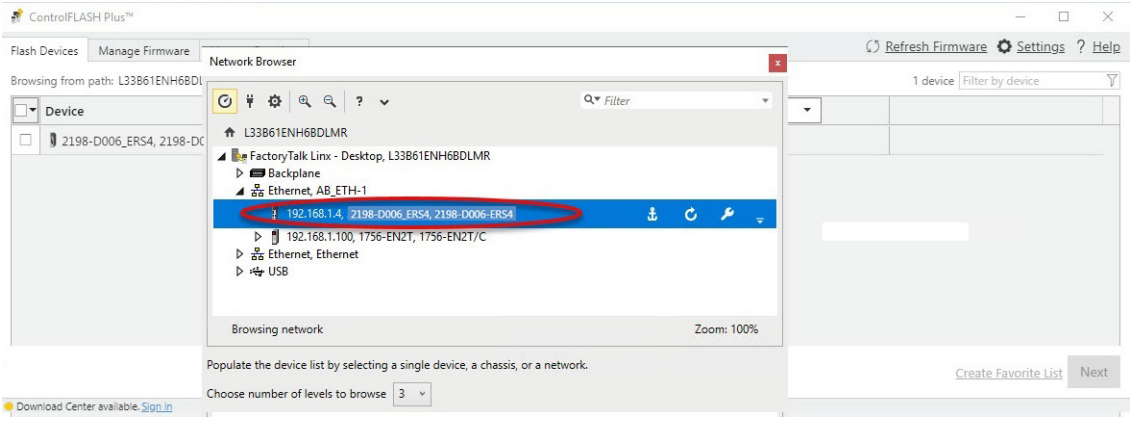

   c. Click OK.

3. On the Flash Devices tab, verify that the check box to the left of the device is selected.

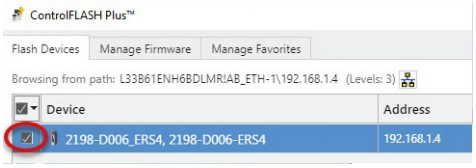

4. From the Flash To pull-down menu, choose one of these methods for choosing the desired firmware revision:
   - Latest from Download Center
   - Latest on Computer

   TIP If you have already downloaded the firmware, choose Latest on Computer and select the desired revision. Otherwise, choose Latest from Download Center and select the desired revision.

   In this example, the Latest on Computer method is chosen.

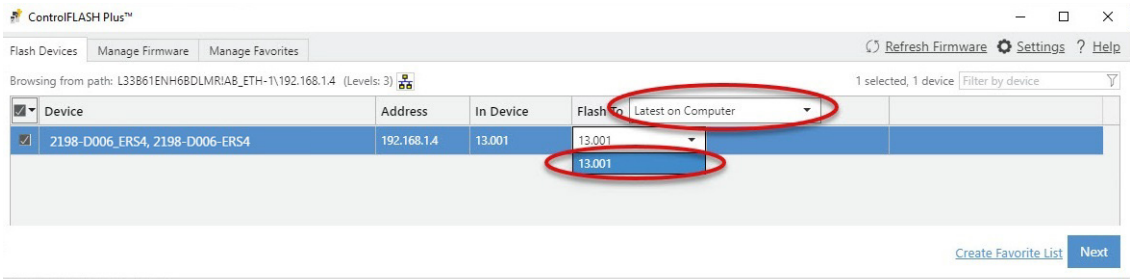

5. Click Next.
6. If a warning dialog box appears, read the warning, complete any recommendations, and click Close.

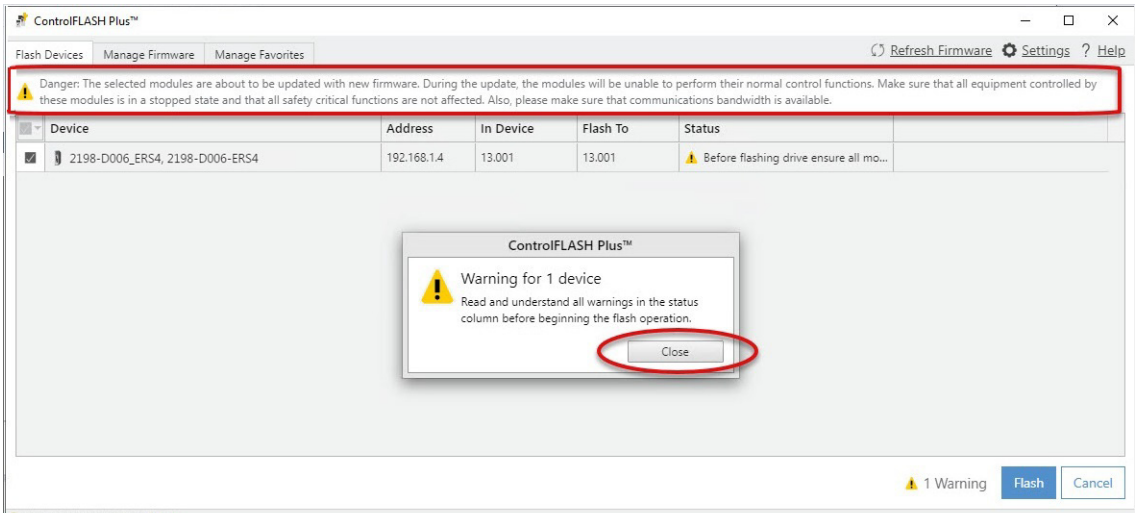

7. After acknowledging all warnings and confirming the desired revisions, click Flash.

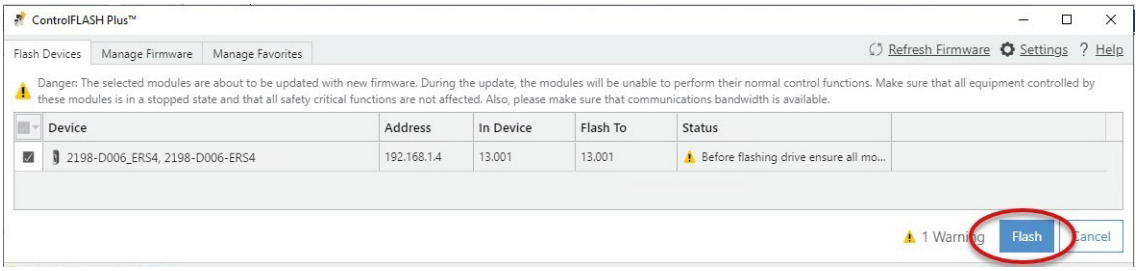

The Status bar appears to show the progress of the firmware update. Also, the status display scrolls 'Updating. Do Not Turn Off', which indicates that the upgrade is in progress.

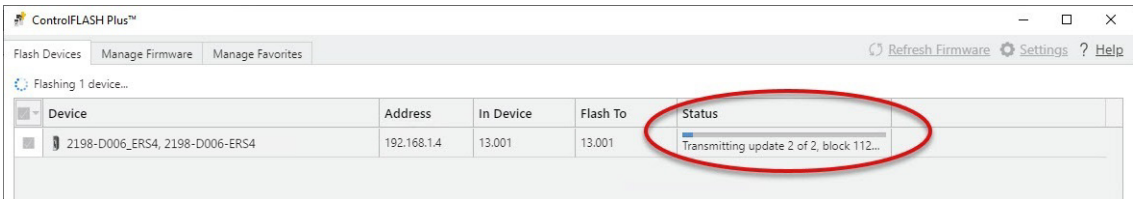

After the upgrade information is sent to the drive, the drive resets and performs diagnostic checking.

After the download, the drive applies the new firmware and reboots. This can take several minutes.

IMPORTANT	Do not cycle power to the drive during this process. A power cycle results in an unsuccessful firmware upgrade and an inoperable module.

After the drive reboots, ControlFlash Plus software indicates success or failure of the update.

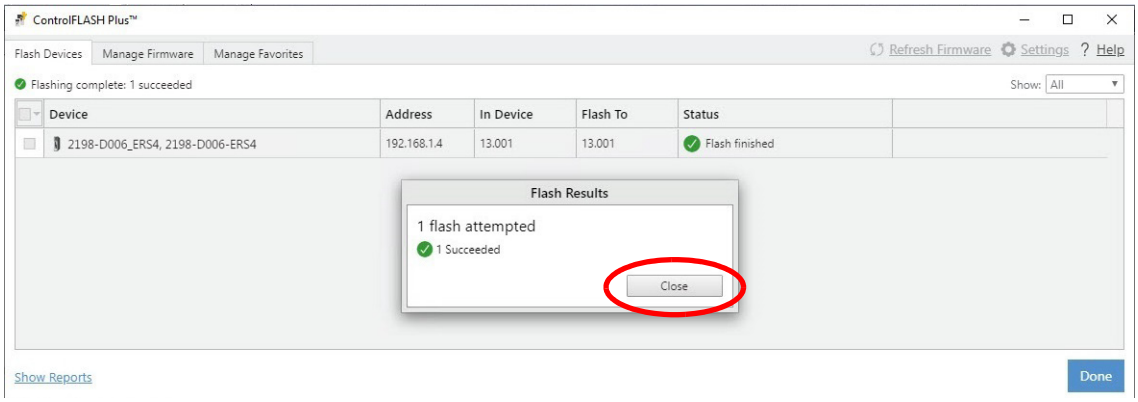

8. When the upgrade has completed, click Close.
9. To complete the process and close the application, click Done.

IMPORTANT	You must return to the drive Module Properties>Connection category to clear the Inhibit Module checkbox before resuming normal operation.

Use ControlFLASH Software to Upgrade Your Drive Firmware

Before using ControlFLASH software you need to configure the communication path by using RSLinx software.

Configure Your Communication Path with RSLinx Software

This procedure assumes that your communication method to the target device is the Ethernet network. It also assumes that any Ethernet communication module or Logix 5000™ controller in the communication path has already been configured.

For more controller information, see Additional Resources on page 13.

Follow these steps to configure the communication path to the target device.

1. Open your RSLinx Classic software.
2. From the Communications menu, choose Configure Drivers.

   The Configure Drivers dialog box appears.

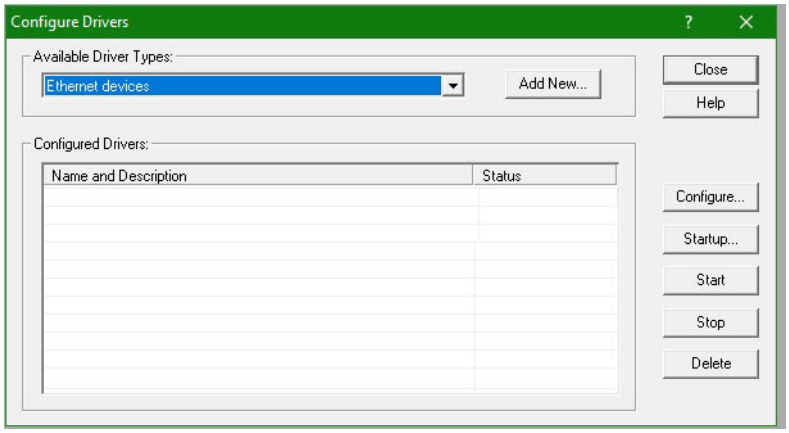

3. From the Available Driver Types pull-down menu, choose Ethernet devices.
4. Click Add New.
5. The Add New RSLinx Classic Driver dialog box appears.
6. Type the new driver name.

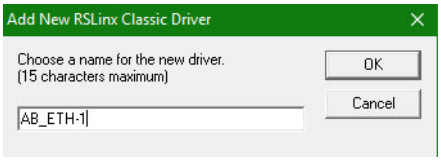

7. Click OK.

The Configure driver dialog box appears.

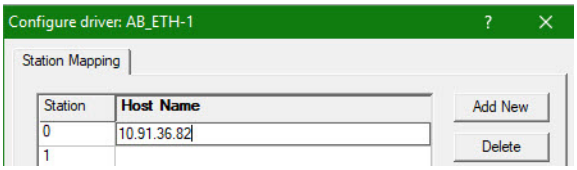

8. Type the IP address of your Ethernet Module or Controller that bridges between the Ethernet network and the EtherNet/IP™ network.
9. Click OK.

   The new Ethernet driver appears under Configured Drivers.

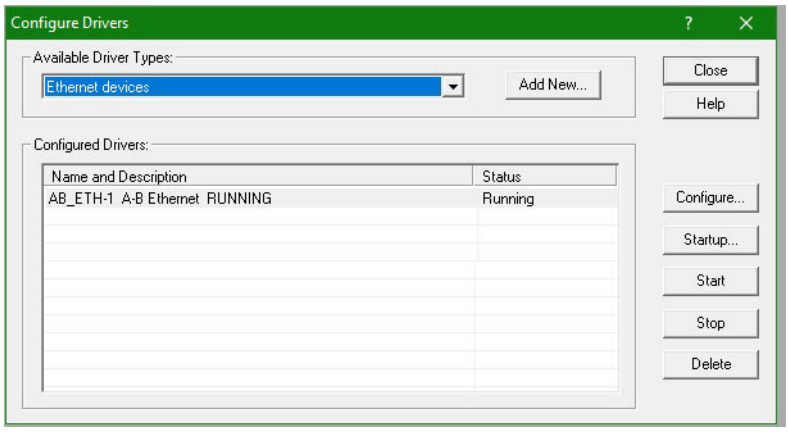

10. Click Close.
11. Minimize the RSLinx application dialog box.

Start the ControlFLASH Software

Follow these steps to start ControlFLASH software and begin your firmware upgrade.

1. In the Logix Designer application, from the Tools menu, choose ControlFLASH.

   TIP You can also open ControlFLASH software by choosing Start>Programs>FLASH Programming Tools>ControlFLASH.

   The Welcome to ControlFLASH dialog box appears.

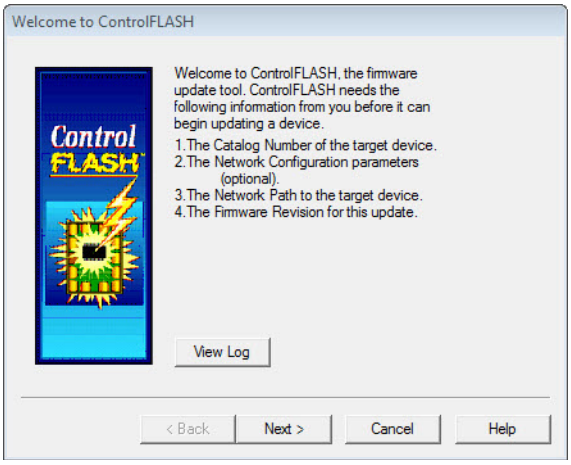

2. Click Next.

   The Catalog Number dialog box appears.

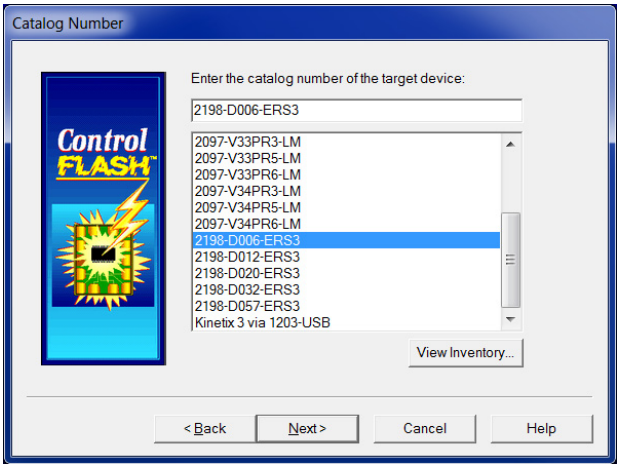

   TIP If your catalog number does not appear, click Browse, select the monitored folder where the firmware kit (DMK files) is located. Click Add and OK.

3. Select your drive module.

   In this example, the 2198-D006-ERS3 servo drive is selected.

4. Click Next.

The Select Device to Update dialog box appears.

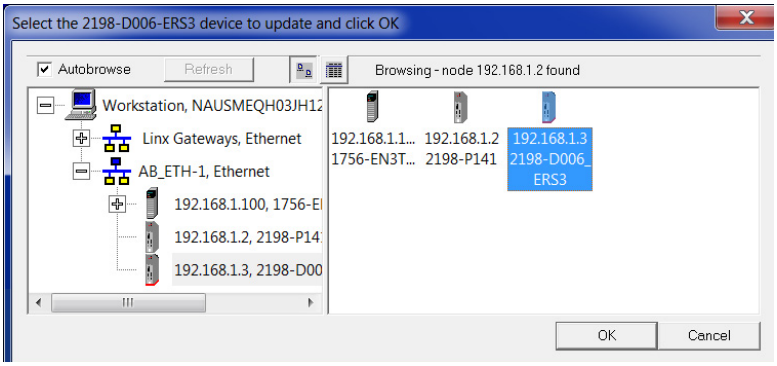

5. Expand your Ethernet node, Logix backplane, and EtherNet/IP network module.
6. Select the servo drive to upgrade.
7. Click OK.

   The Firmware Revision dialog box appears.

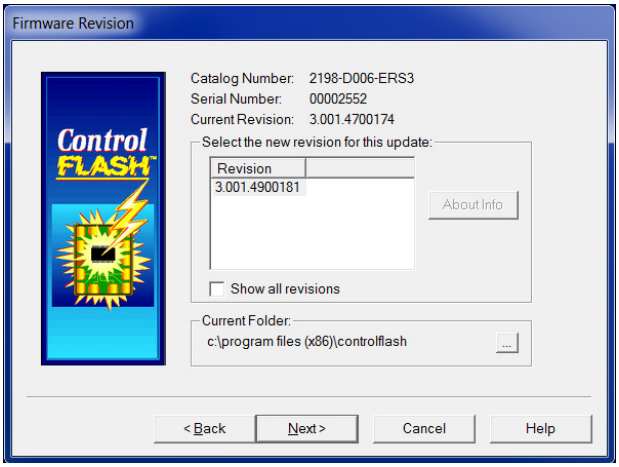

8. Select the firmware revision to upgrade.
9. Click Next.

   The Summary dialog box appears.

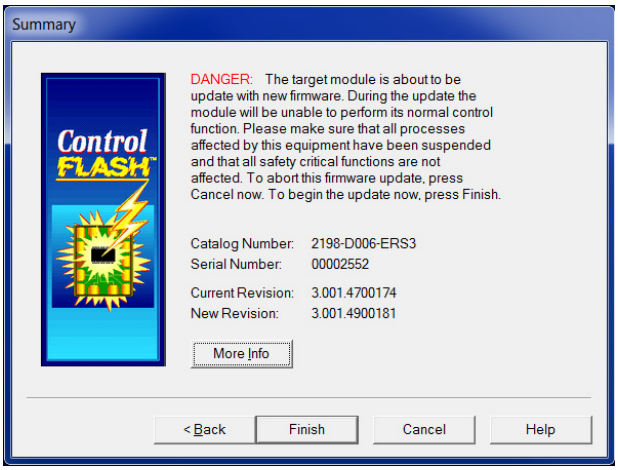

10. Confirm the drive catalog number and firmware revision.
11. Click Finish.

    This ControlFLASH warning dialog box appears.

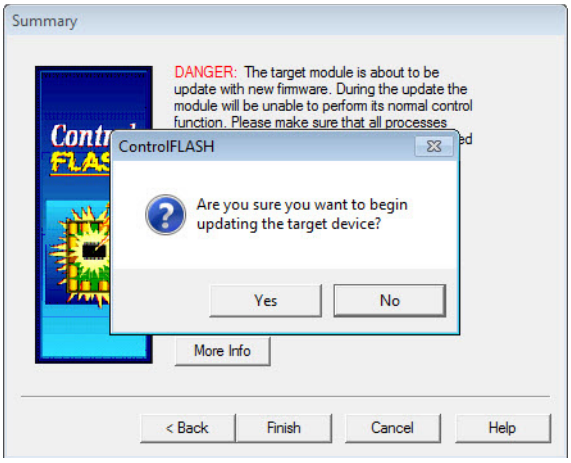

12. To begin the firmware update, click Yes.

    This ControlFLASH warning dialog box appears.

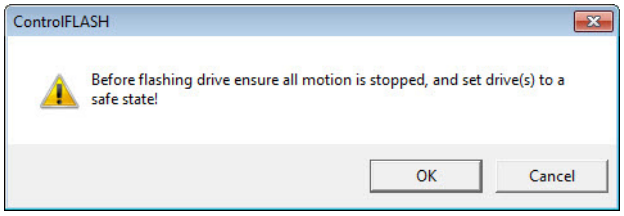

13. Acknowledge the warning and click OK.

    The Progress dialog box appears and updating begins.

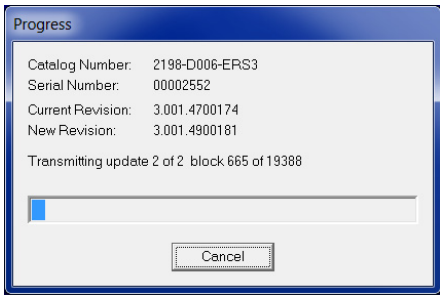

    After the upgrade information is sent to the drive, the drive resets and performs diagnostic checking.

14. Wait for the Progress dialog box to time out.

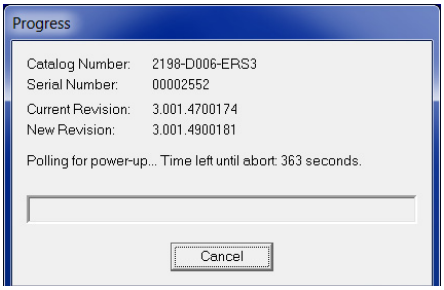

It is normal for this process to take several minutes.

IMPORTANT	Do not cycle power to the drive during this process. A power cycle results in an unsuccessful firmware upgrade and an inoperable module.

15. Verify that the Update Status dialog box appears and indicates success or failure as described below.

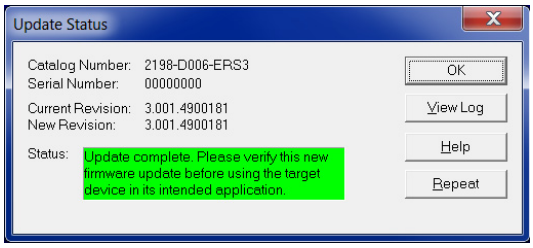

Upgrading Status	If
Success	Update complete appears in a green Status dialog box, then go to step 16.
Failure	Update failure appears in a red Status dialog box, then refer to the ControlFLASH Firmware Upgrade Kit User Manual, publication 1756-UM105 for troubleshooting information.

16. Click OK.

IMPORTANT	You must return to the drive Module Properties>Connection category to clear the Inhibit Module checkbox before resuming normal operation.

Verify the Firmware Upgrade

Follow these steps to verify your firmware upgrade was successful.

TIP Verifying the firmware upgrade is optional.

1. Open your RSLinx software.
2. From the Communications menu, choose RSWho.

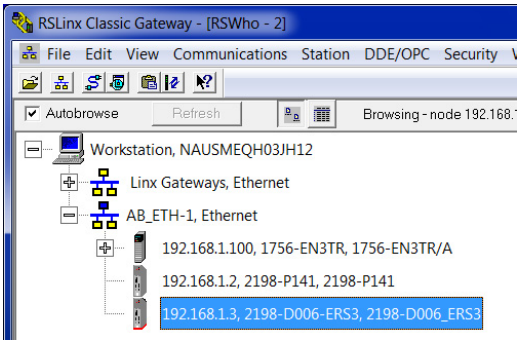

3. Expand your Ethernet node, Logix backplane, and EtherNet/IP network module.
4. Right-click the drive module and choose Device Properties.

   The Device Properties dialog box appears.

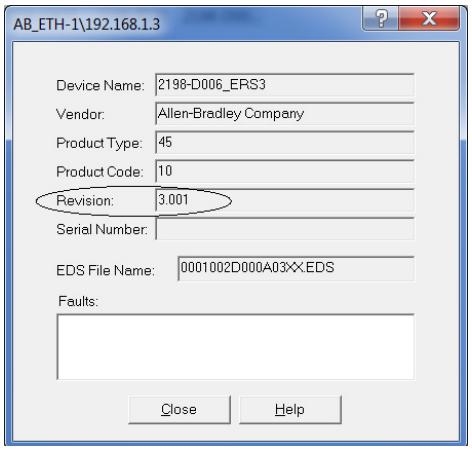

5. Verify the new firmware revision level.
6. Click Close.

Notes:

Size Multi-axis Shared-bus Configurations

This appendix provides information and examples for sizing your Kinetix® 5700 drive system power supplies and inverters in multi-axis shared-bus configurations.

Topic	Page
Shared DC-bus Configurations	395
System Sizing Guidelines	397
System Sizing Example	403
System Sizing Application Example	404

Shared DC-bus Configurations

You can supply power to your Kinetix 5700 shared DC-bus system configuration from following sources:

- Single 2198-P*xxx* DC-bus power supply
- Multiple 2198-P208 DC-bus power supplies (up to three are possible)
- Single 2198-RP*xxx* regenerative bus supply
- Multiple 8720MC-RPS regenerative power supply

Shared DC-bus Definitions

Throughout this manual, these terms are used to describe how drive modules are grouped together.

Table 180 - Shared-bus Terminology

Term	Definition
DC-bus group	Drive modules that are all connected to the same DC bus.
Cluster	Group of power supply and/or drive modules that are directly connected together via Kinetix 5700 DC bus-bars only.
Extended cluster	Group of drive modules that are directly connected together via Kinetix 5700 DC bus-bars and connected to the power supply cluster via customer-supplied DC-bus cable.
Power supply cluster	The cluster that contains the AC to DC converter (power supply).
Extended DC-bus	When 2 drive clusters are part of the same DC-bus group joined by the DC bus-bars and customer-supplied DC-bus cable.

In this example, two drive clusters in the same cabinet are connected by the same 276...747V DC-bus voltage. Kinetix 5700 capacitor modules provide connection points for the DC bus. The extension module is needed only when the DC-bus system current exceeds 104 A, and can support up to 208 A maximum external DC-bus current.

Figure 199 - Extended DC-bus Installation

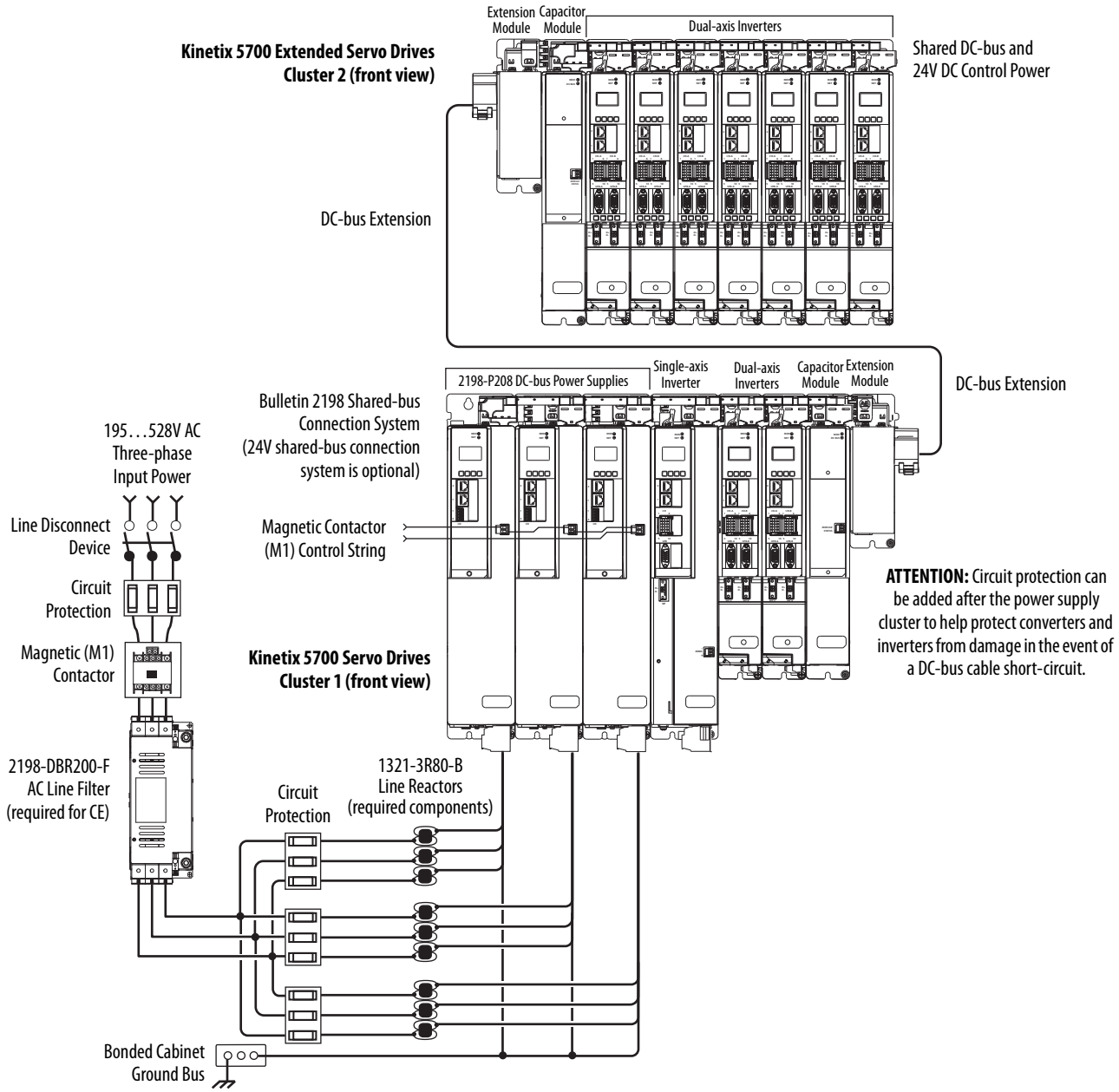

IMPORTANT When two or three DC-bus power supplies are wired together in the same drive cluster, they must all be catalog number 2198-P208.

General Sizing Guidelines

These limitations apply to Kinetix 5700 servo drive systems supplied by a single 2198-P*xxx* or multiple 2198-P208 DC-bus power supplies, or 2198-RP*xxx* regenerative bus supplies:

- The sum of the inverter motor-power cable lengths for all inverters on the same DC bus-sharing group must not exceed 1200 m (3937 ft) to comply with CE requirements when used with 2198-DBR*xx*-F line filters. 2198-DB*xx*-F line filters have a total motor cable length limit of 400 m (1312 ft). See Drive to Motor Cable Lengths on page 153 for additional motor power cable-length limitations.
- The total system capacitance limit is based on the power supply catalog number. DC-bus groups must not exceed the limits as defined in Table 181.
- No more than three 2198-P208 DC-bus power supplies can be used to increase the converter power.
- If using the 24V DC shared-bus connection system to distribute control input power to a cluster of drive modules, current from the 24V power supply must not exceed 40 A.
- The Kinetix 5700 system can have multiple drive clusters in a single DC-bus group. See DC Bus Cluster-to-Cluster Cable Lengths on page 150 for more information on extended clusters.

Refer the 8720MC Regenerative Power Supply Installation Manual, publication 8720MC-RM001, for additional system sizing limitations.

System Sizing Guidelines

You begin the process by selecting the motor for your application and sizing the drive and power supply combinations. Next, calculate whether the motor power cable length, total system capacitance, and 24V current demand are within specifications.

For systems with an iTRAK® power supply, the iTRAK system requirements must be calculated to determine the following:

- Kinetix 5700 DC-bus loading (DC-bus motoring and bus-regulation power requirements)
- 2198-P*xxx* power supply for providing DC-bus to the iTRAK power supplies
- 24V current demand
- Number of iTRAK power supplies required
- Resulting net converter power and bus-regulator capacity

See iTRAK System with TriMax Bearings User Manual, publication 2198T-UM002, or iTRAK 5730 System User Manual, publication 2198T-UM003.

For iTRAK hardware and iTRAK power supplies, proceed to the Calculate System and External-bus Capacitance on page 398.

Select Drive/Motor Combinations

The motor required for a particular application determines the servo drive required for full motor performance.

For best results, use the Motion Analyzer system sizing and selection tool, available at https://motionanalyzer.rockwellautomation.com. Drive/motor performance specifications and torque/speed curves are also available in the Kinetix 5700 Drive Systems Design Guide, publication KNX-RM010.

Select the Power Supply and Define the DC-bus Groups

- Determine the converter DC-bus motoring and bus-regulation power requirements based on the load profile.
- Estimate the net converter and inverter power and bus-regulator capacity, based on the load profiles.
- Determine if 2198-CAPMOD-2240 capacitor modules are required.
- Determine if 2198-DCBUSCOND-RP312 DC-bus conditioner modules are required.

For best results, use the Motion Analyzer system sizing and selection tool, available at https://motionanalyzer.rockwellautomation.com.

Calculate System and External-bus Capacitance

Total system capacitance is the sum of all internal capacitance values from each of the drive modules (single-axis inverters, dual-axis inverters, power supplies, and capacitor modules) in the same DC-bus group.

The total system capacitance must be less than the maximum supported DC-bus capacitance value of the power supply.

IMPORTANT If your total system capacitance value exceeds the maximum supported capacitance value of the DC-bus power supply, perform one of the following:

- Increase the size of the 2198-P*xxx* DC-bus power supply or 2198-RP*xxx* regenerative bus supply
- Use multiple DC-bus power supplies (1…3 power supplies are possible)

Decrease the total system capacitance by removing inverters or capacitor modules from the DC-bus group.

External bus capacitance is the total system capacitance minus the power supply capacitance. The external bus capacitance must be entered into the Logix Designer application for a regenerative power supply to maintain proper control.

Table 181 - Power Supply Capacitance

Power Supply	DC-bus Power Supply Cat. No.	Supported Capacitance, max µF	Internal Capacitance µF
Single DC-bus Power Supply	2198-P031	8,000	585
	2198-P070		780
	2198-P141	13,000	1640
	2198-P208		2050
Multiple DC-bus Power Supplies	2198-P208 x 2	26,000	4100
	2198-P208 x 3	39,000	6150
Regenerative Bus Supplies	2198-RP088	9,000	940
	2198-RP200	15,000	2460
	2198-RP263	25,000	4510
	2198-RP312		5740
iTRAK Power Supply	2198T-W25K-ER	390	0

Table 182 - Internal Inverter and Accessory Module Capacitance

Drive Module	Drive Module Cat. No.	Internal Capacitance µF
Dual-axis Inverters	2198-D006-ERS*x*	165
	2198-D012-ERS*x*	
	2198-D020-ERS*x*	330
	2198-D032-ERS*x*	390
	2198-D057-ERS*x*	705
Single-axis Inverters	2198-S086-ERS*x*	560
	2198-S130-ERS*x*	840
	2198-S160-ERS*x*	1120
	2198-S263-ERS*x*	2050
	2198-S312-ERS*x*	
Capacitor Module	2198-CAPMOD-2240	2240
Extension Module	2198-CAPMOD-DCBUS-IO	0
DC-bus Conditioner Module	2198-DCBUSCOND-RP312	0

Calculate the Total Motor Power Cable Length

To meet CE requirements, the sum of all motor power cable lengths from the same DC-bus group must not exceed 1200 m (3937 ft) when 2198-DBR*xx*-F line filters are used. See Drive to Motor Cable Lengths on page 153 for additional motor power cable-length limitations.

Calculate 24V DC Control Power Current Demand

If using the 24V DC shared-bus connection system to distribute control input power to a drive cluster, output current from the 24V power supply must not exceed 40 A.

Table 183 - Control Power Current Specifications

Drive Module	Drive Module Cat. No.	24V Current Per Module (non-brake motor) A_{DC}	24V Current, max (with maximum brake current) A_{DC}	24V Inrush Current (5) A
DC-bus Power Supplies	2198-P031	0.8	–	4.0
	2198-P070			
	2198-P141	1.9		
	2198-P208			
Regenerative Bus Supplies	2198-RP088	4.3	–	4.0
	2198-RP200	5.4		
	2198-RP263	9.1		
	2198-RP312			
Dual-axis Inverters	2198-D006-ERS*x*	1.4 (2)	5.5 (3)	4.0
	2198-D012-ERS*x*			
	2198-D020-ERS*x*			
	2198-D032-ERS*x*	1.7 (2)	7.7 (3)	
	2198-D057-ERS*x*	2.3 (2)	8.3 (3)	
Single-axis Inverters	2198-S086-ERS*x*	4.6	9.6 (4)	4.0
	2198-S130-ERS*x*			
	2198-S160-ERS*x*			
	2198-S263-ERS*x*			
	2198-S312-ERS*x*			
iTRAK Power Supply (1)	2198T-W25K-ER	1.3	–	2.2
Capacitor Module	2198-CAPMOD-2240	0.1	–	7.0
Extension Module	2198-CAPMOD-DCBUS-IO	–		–
DC-bus Conditioner Module	2198-DCBUSCOND-RP312	0.1		7.0

(1) These values represent only the iTRAK power supply. They do not include the iTRAK motor modules that are connected to the iTRAK power supply and also draw current from this 24V control power input. For more information regarding 24V control power requirements, see iTRAK System with TriMax Bearings User Manual, publication 2198T-UM002, or iTRAK 5730 System User Manual, publication 2198T-UM003.
(2) Values are base current per module.
(3) Values assume two brake motors, each drawing the maximum rating of 2 A, are attached to each module.
(4) Values assume the maximum rated brake current of 5 A.
(5) Inrush current duration is less than 30 ms.

IMPORTANT If the 24V control-power output current (based on your system calculation) exceeds 40 A, you can insert another control-power input wiring connector at any point in your drive cluster. However, the input connector must always extend the 24V DC-bus from left to right.

24V DC Voltage Drop Calculation Example

In this example, the 24V DC power supply is 21.3 m (70 ft) away from the Kinetix 5700 drive system. The drive system includes one 2198-RP312 regenerative bus supply, two 2198-S312-ERS4 single-axis inverters, and two 2198-D057-ERS4 dual-axis inverters. The inverters supply power to six non-brake motors.

Figure 200 - 24V DC Voltage Drop Example System

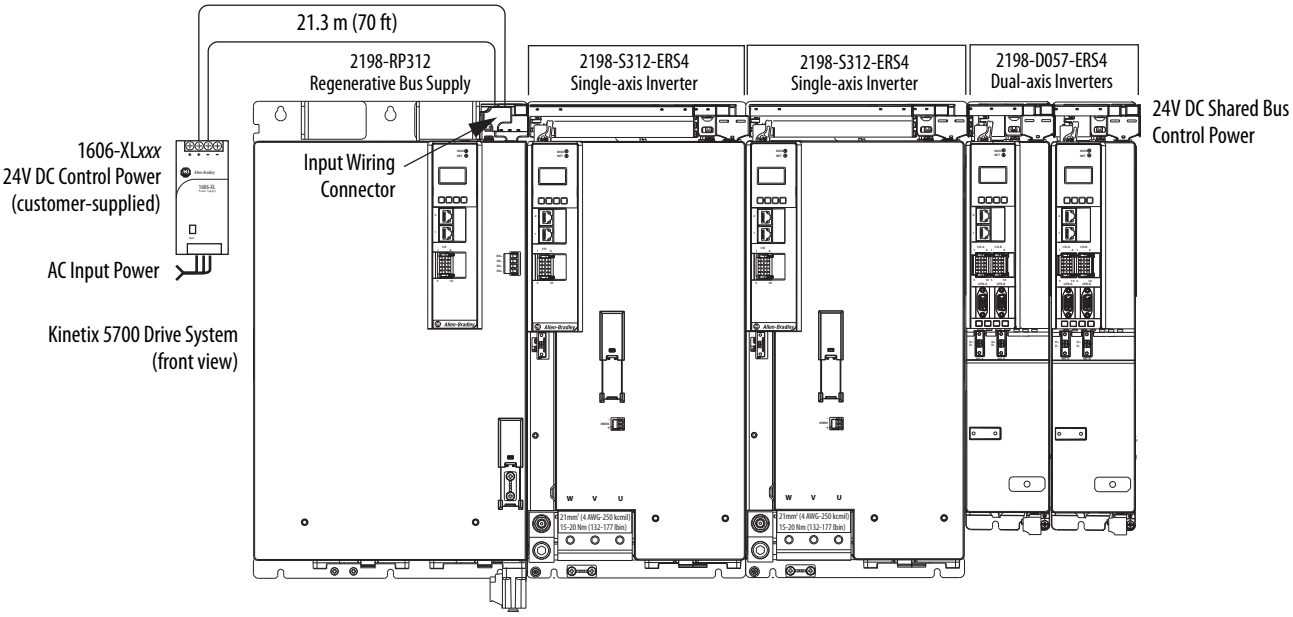

Follow these steps to calculate the voltage drop for your drive system. The system conditions remain the same, but the wire gauge (AWG) is increased to reduce the voltage drop.

1. Determine the 24V DC control power current demand.

   In this example, the total current demand is 22.9 A. See Calculate 24V DC Control Power Current Demand on page 400 for current values.

Module	Qty	Current Demand
2198-RP312	1	9.1 A
2198-S312-ERS4	2	4.6 • 2 = 9.2 A
2198-D057-ERS4	2	2.3 • 2 = 4.6 A
Total current demand		22.9 A

2. Determine the voltage drop across the wire that is used to supply 24V power to the drive system (voltage drop = current draw • resistance of the wire).

You must obtain the wire resistance value from the wire manufacturer. Resistance values used below are only examples.

Wire Length	Wire Gauge mm2 (AWG)	Calculation	Voltage Drop
21.3 m (70 ft)	1.5 (16)	22.9 A • 0.281 Ω	6.43V
	4.0 (12)	22.9 A • 0.111 Ω	2.54V
	6.0 (10)	22.9 A • 0.070 Ω	1.60V

3. Determine if the voltage supplied to the drive system is within its required input-voltage range; 24V ±10% (21.6...26.4V DC).

Wire Length	Wire Gauge	Calculation	Applied Voltage
21.3 m (70 ft)	1.5 (16)	24V – 6.43V	17.57V (insufficient)
	4.0 (12)	24V – 2.54V	21.46V (insufficient)
	6.0 (10)	24V – 1.60V	22.40V (acceptable)

In this example, increasing the wire gauge to 6 mm^2 (10 AWG) is one way to lower the voltage drop. See 24V Control Power Evaluation on page 47 for additional suggestions.

System Sizing Example

This example shows how a single Kinetix 5700 drive cluster meets the total bus capacitance, power cable length, and 24V DC current limitations.

Figure 201 - Example DC-bus Group (single drive cluster)

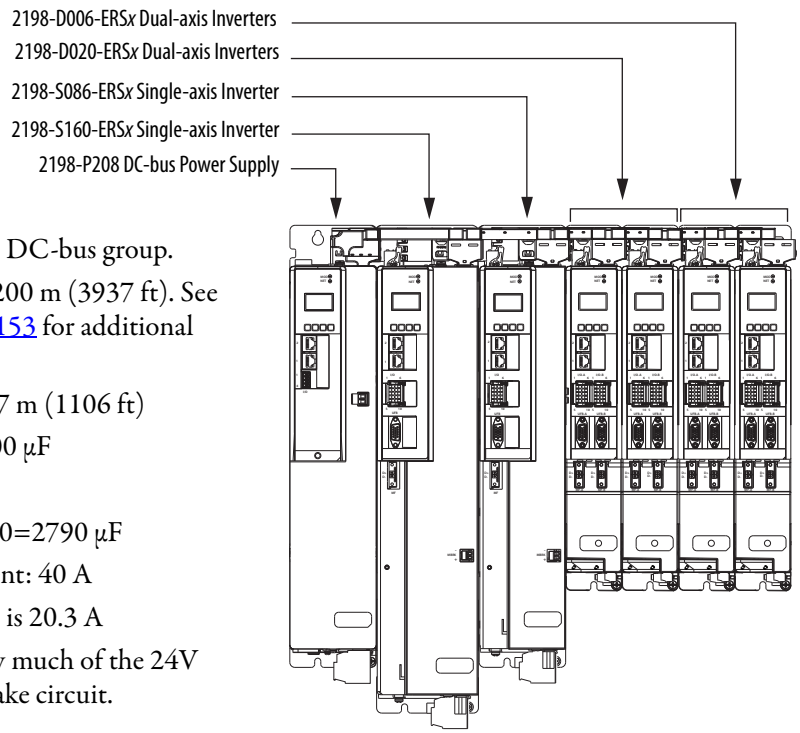

In this example, only 1 drive cluster defines the DC-bus group.

- Maximum motor power cable length: 1200 m (3937 ft). See Drive to Motor Cable Lengths on page 153 for additional motor power cable-length limitations.
  - Total motor power cable length is 337 m (1106 ft)
- Maximum supported capacitance: 13,000 µF
  - Total system capacitance is 4840 µF
  - External bus capacitance is 4840-2050=2790 µF
- Maximum 24V DC control power current: 40 A
  - Total 24V DC control power current is 20.3 A
  - The Coil Current column shows how much of the 24V current is consumed by the motor brake circuit.

All of the total system values are within the acceptable range.

Table 184 - System Sizing Example Data

DC-bus Group Cat. No.	Axis	Internal Capacitance µF	Cable Length m (ft)	Servo Motor		24V DC Control Power Current Calculations		
				Servo Motor Cat. No.	Brake Option Yes/No	Brake Current @ 24V DC A	24V Current (non-brake motor) A_{DC}	Total Current A
2198-P208		2050	–	–	–	–	1.9	1.9
2198-S160-ERS*x*		1120	50 (164)	MPL-B980E	No	–	4.6	4.6
2198-S086-ERS*x*		560	90 (295)	MPL-B660F	Yes	2.1	4.6	6.7
2198-D020-ERS*x*	A	390	20 (66)	VPL-B1152F	No	–	1.4	1.4
	B		15 (49)	VPL-B1152F	No	–		
2198-D020-ERS*x*	A	390	9 (30)	VPL-B1003C	Yes	0.50	1.4	2.4
	B		90 (295)	VPL-B1003C	Yes	0.50		
2198-D006-ERS*x*	A	165	9 (30)	MPL-B310P	Yes	0.50	1.4	1.9
	B		9 (30)	MPL-B310P	No	–		
2198-D006-ERS*x*	A	165	15 (49)	MPL-B310P	No	–	1.4	1.4
	B		30 (98)	MPL-B310P	No	–		
	Totals	**4840**	**337 (1106)**			**3.6**	**16.7**	**20.3**

For more information on motor and motor-brake specifications, refer to the Kinetix Rotary Motion Specifications Technical Data, publication KNX-TD001.

System Sizing Application Example

This example shows how to size the DC-bus power supply for your multi-axis system by using the motor output power (kW). Sizing is based on the largest motor kW value in your drive system.

The Kinetix 5700 drive modules are zero-stacked and use the shared-bus connection system to extend power from the 2198-P*xxx* DC-bus power supply or 2198-RP*xxx* regenerative bus supply to multiple drive modules. For best results, use the Motion Analyzer system sizing and selection tool, available at https://motionanalyzer.rockwellautomation.com.

Table 185 - Kinetix 5700 System Power Supply Continuous Output Power

DC-Bus Power Supply Cat. No.	Continuous Output Power kW	Regenerative Bus Supply Cat. No.	Continuous Output Power kW
2198-P031	7	2198-RP088	24
2198-P070	17	2198-RP200	67
2198-P141	31	2198-RP263	119
2198-P208	46	2198-RP312	140

In this typical system, all axes are running in an asynchronous rapid acceleration/deceleration motion profile. Use this formula to calculate the minimum continuous output-power (kW) for your Kinetix 5700 drive system:

2198-P*xxx* = Largest motor-rated kW x (axis-count x 0.6) + (axis-count x 0.2)

Table 186 - Motor/Drive System Example

Motor Quantity	Motor Cat. No.	Motor Rated Output (1) kW	Drive Cat. No.
1	MPM-B2153F	7.2	2198-S086-ERS*x*
1			2198-S086-ERS*x*
1	MPL-B660F	6.1	2198-S086-ERS*x*
1			2198-S086-ERS*x*
2	VPL-B0753	0.82	2198-D020-ERS*x*
2			2198-D020-ERS*x*
8 = axis count			

(1) For more motor specifications, see the Kinetix Rotary Motion Specifications Technical Data, publication KNX-TD001.

Continuous Output Power, min (kW) = 7.2 x (8 x 0.6) + (8 x 0.2)
kW = 7.2 x 4.8 + 1.6
kW = 36.16

In this example, the MPM-B2153F motor has the largest motor-rated output. As a result, the minimum continuous output-power = 36.16 kW, and the 2198-P208 DC-bus power supply or 2198-RP200 regenerative bus supply is required for the 8-axis system example.

Maximum Motor Cable Lengths for Kinetix 5700 Power Supplies

This appendix provides information on maximum motor cable length limitations for Kinetix® 5700 drive systems.

Topic	Page
DC-bus Power Supply Configurations	406
Regenerative Bus Supply Configurations	409
Third-party Motor Configurations	410

Maximum motor cable lengths for the following configurations are dependent on these configuration variables:

- Kinetix 5700 power supply
  - 2198-P*xxx* DC-bus power supply
  - 2198-RP*xxx* regenerative bus supply
- AC input power type
  - WYE grounded
  - WYE impedance grounded
  - WYE/Delta corner grounded or ungrounded
- AC input voltage
  - 240V AC
  - 480V AC
  - 400V AC
- Whether the regenerative bus supply is operating with DC bus regulation enabled or disabled
  - For more information on DC bus voltage regulation, refer to DC-bus Voltage Regulation on page 40
- Whether the drive cluster includes a DC-bus conditioner module
- Allen-Bradley® servo motor or actuator connected to the inverter

DC-bus Power Supply Configurations

2198-RP*xxx* regenerative power supplies have the same maximum drive-to-motor cable length limits as 2198-P*xxx* DC-bus power supplies when they operate with DC-bus regulation disabled.

Table 187 - DC-bus Power Supply (480V AC input)

AC Input Power Source Type	Motor/Actuator Cat. No.	Drive-to-Motor Cable Length, max m (ft)
WYE Grounded	• LDAT-S*xxxxxx* • LDC-C*xxxxxx* • MPAS-B8*xxx*F-ALM • MPAS-B9*xxx*L-ALM	10 (32.8)
	• VP*x*-B063*xx*, VP*x*-B075*xx* • VPAR-B1*xxxx*, VPAR-B2*xxxx*	90 (295)
	• MPL-B15*xx*, MPL-B2*xx* • MPAR-B1*xxxx*, MPAR-B2*xxxx* • MPAS-B*xxxx*1, MPAS-B*xxxx*2 • MPAI-B*xxxxx*	20 (65)
	• VP*x*-B100*xx*…VP*x*-B300*xx* • MPAR-B3*xxxx* • VPAR-B3*xxxx* • MP*x*-B3*xxx*…MP*x*-B9*xxx* • MPM-B115*xx*…MPM-B215*xx* • HPK-*xxxxxx* • RDB-B*xxxxx*	90 (295)
Delta Corner Grounded	• VP*x*-B063*xx*, VP*x*-B075*xx* • MPL-B15*xx*, MPL-B2*xx* • MPAR-B1*xxxx*, MPAR-B2*xxxx* • VPAR-B1*xxxx*, VPAR-B2*xxxx* • MPAS-B*xxxx*1, MPAS-B*xxxx*2 • MPAI-B*xxxxx*	15 (49.2)
	• VP*x*-B100*xx*…VP*x*-B300*xx* • MPAR-B3*xxxx* • VPAR-B3*xxxx* • MP*x*-B3*xxx*…MP*x*-B9*xxx* • MPM-B115*xx*…MPM-B215*xx* • HPK-*xxxxxx* • RDB-B*xxxxx*	50 (164)
• WYE Impedance Grounded (1) • WYE Ungrounded (2) • Delta Ungrounded (2)	• LDAT-S*xxxxxx* • LDC-C*xxxxxx* • MPAS-B8*xxx*F-ALM • MPAS-B9*xxx*L-ALM	10 (32.8)
	• VP*x*-B063*xx*, VP*x*-B075*xx* • VPAR-B1*xxxx*, VPAR-B2*xxxx*	90 (295)
	• MPL-B15*xx*, MPL-B2*xx* • MPAR-B1*xxxx*, MPAR-B2*xxxx* • MPAS-B*xxxx*1, MPAS-B*xxxx*2 • MPAI-B*xxxxx*	20 (65)
	• VP*x*-B100*xx*…VP*x*-B300*xx* • MPAR-B3*xxxx* • VPAR-B3*xxxx* • MP*x*-B3*xxx*…MP*x*-B9*xxx* • MPM-B115*xx*…MPM-B215*xx* • HPK-*xxxxxx* • RDB-B*xxxxx*	90 (295)

(1) Impedance grounded systems running in ground fault conditions, for prolonged periods of time, cause additional stress to the motor insulation and can cause premature motor failure.

(2) Unbalanced, floating, ungrounded systems can cause additional stress to the motor.

Table 188 - DC-bus Power Supply (400V AC input)

AC Input Power Source Type	Motor/Actuator Cat. No.	Drive-to-Motor Cable Length, max m (ft)
WYE Grounded	• LDAT-S*xxxxxx* • LDC-C*xxxxxx* • MPAS-B8*xxx*F-ALM • MPAS-B9*xxx*L-ALM	10 (32.8)
	• VP*x*-B063*xx*, VP*x*-B075*xx* • MPL-B15*xx*, MPL-B2*xx* • MPAR-B1*xxxx*, MPAR-B2*xxxx* • VPAR-B1*xxxx*, VPAR-B2*xxxx* • MPAS-B*xxxx*1, MPAS-B*xxxx*2 • MPAI-B*xxxxx*	90 (295)
	• VP*x*-B100*xx*…VP*x*-B300*xx* • MPAR-B3*xxxx* • VPAR-B3*xxxx* • MP*x*-B3*xxx*…MP*x*-B9*xxx* • MPM-B115*xx*…MPM-B215*xx* • HPK-*xxxxxx* • RDB-B*xxxxx*	90 (295)
Delta Corner Grounded	• VP*x*-B063*xx*, VP*x*-B075*xx* • MPL-B15*xx*, MPL-B2*xx* • MPAR-B1*xxxx*, MPAR-B2*xxxx* • VPAR-B1*xxxx*, VPAR-B2*xxxx* • MPAS-B*xxxx*1, MPAS-B*xxxx*2 • MPAI-B*xxxxx*	50 (164)
	• VP*x*-B100*xx*…VP*x*-B300*xx* • MPAR-B3*xxxx* • VPAR-B3*xxxx* • MP*x*-B3*xxx*…MP*x*-B9*xxx* • MPM-B115*xx*…MPM-B215*xx* • HPK-*xxxxxx* • RDB-B*xxxxx*	90 (295)
• WYE Impedance Grounded (1) • WYE Ungrounded (2) • Delta Ungrounded (2)	• LDAT-S*xxxxxx* • LDC-C*xxxxxx* • MPAS-B8*xxx*F-ALM • MPAS-B9*xxx*L-ALM	10 (32.8)
	• VP*x*-B063*xx*, VP*x*-B075*xx* • MPL-B15*xx*, MPL-B2*xx* • MPAR-B1*xxxx*, MPAR-B2*xxxx* • VPAR-B1*xxxx*, VPAR-B2*xxxx* • MPAS-B*xxxx*1, MPAS-B*xxxx*2 • MPAI-B*xxxxx*	90 (295)
	• VP*x*-B100*xx*…VP*x*-B300*xx* • MPAR-B3*xxxx* • VPAR-B3*xxxx* • MP*x*-B3*xxx*…MP*x*-B9*xxx* • MPM-B115*xx*…MPM-B215*xx* • HPK-*xxxxxx* • RDB-B*xxxxx*	90 (295)

(1) Impedance grounded systems running in ground fault conditions, for prolonged periods of time, cause additional stress to the motor insulation and can cause premature motor failure.

(2) Unbalanced, floating, ungrounded systems can cause additional stress to the motor.

Table 189 - DC-bus Power Supply (240V AC input)

AC Input Power Source Type	Servo Motor Cat. No.	Drive-to-Motor Cable Length, max m (ft)
WYE Grounded	• VP*x*-A063*xx*, VP*x*-A075*xx* • MPL-A15*xx*, MPL-A2*xx*	90 (295)
	• VP*x*-A100*xx*…VP*x*-A300*xx* • MP*x*-A3*xxx*…MP*x*-A5*xxx* • MPM-A115*xx*…MPM-A215*xx*	
Delta Corner Grounded	• VP*x*-A063*xx*, VP*x*-A075*xx* • MPL-A15*xx*, MPL-A2*xx*	50 (164)
	• VP*x*-A100*xx*…VP*x*-A300*xx* • MP*x*-A3*xxx*…MP*x*-A5*xxx* • MPM-A115*xx*…MPM-A215*xx*	90 (295)
• WYE Impedance Grounded (1) • WYE Ungrounded (2) • Delta Ungrounded (2)	• VP*x*-A063*xx*, VP*x*-A075*xx* • MPL-A15*xx*, MPL-A2*xx*	90 (295)
	• VP*x*-A100*xx*…VP*x*-A300*xx* • MP*x*-A3*xxx*…MP*x*-A5*xxx* • MPM-A115*xx*…MPM-A215*xx*	

(1) Impedance grounded systems running in ground fault conditions, for prolonged periods of time, cause additional stress to the motor insulation and can cause premature motor failure.

(2) Unbalanced, floating, ungrounded systems can cause additional stress to the motor.

Regenerative Bus Supply Configurations

2198-RP*xxx* regenerative bus supplies have limited maximum drive-to-motor cable length when DC-bus regulation is enabled. However, the DC Bus can be extended up to 70 m (230 ft) to remote clusters of Kinetix 5700 inverters. The result is a shorter distance from the inverter to the motor and thus shorter individual motor cable lengths.

Table 190 - Regenerative Bus Supply (480V AC input)

AC Input Power Source Type [1]	Motor/Actuator Cat. No.		Drive-to-Motor Cable Length, max m (ft)	
			With DC-bus Conditioner	Without DC-bus Conditioner
WYE Grounded	• LDAT-S*xxxxxx* • LDC-C*xxxxxx*	• MPAS-B8*xxx*F-ALM • MPAS-B9*xxx*L-ALM	10 (32.8)	10 (32.8)
	• VP*x*-B063*xx*, VP*x*-B075*xx* • MPL-B15*xx*, MPL-B2*xx* • VPAR-B1*xxxx*, VPAR-B2*xxxx*	• MPAR-B1*xxxx*, MPAR-B2*xxxx* • MPAS-B*xxxx*1, MPAS-B*xxxx*2 • MPAI-B*xxxxx*	20 (65.6)	15 (49.2)
	• VP*x*-B100*xx*…VP*x*-B300*xx* • VPAR-B3*xxxx* • MPAR-B3*xxxx* • RDB-B*xxxxx*	• MP*x*-B3*xxx*…MP*x*-B9*xxx* • MPM-B115*xx*…MPM-B215*xx* • HPK-*xxxxxx*	50 (164)	30 (98.4)
WYE Impedance Grounded [2]	• LDAT-S*xxxxxx* • LDC-C*xxxxxx*	• MPAS-B8*xxx*F-ALM • MPAS-B9*xxx*L-ALM	10 (32.8)	10 (32.8)
	• VP*x*-B063*xx*, VP*x*-B075*xx* • MPL-B15*xx*, MPL-B2*xx* • VPAR-B1*xxxx*, VPAR-B2*xxxx*	• MPAR-B1*xxxx*, MPAR-B2*xxxx* • MPAS-B*xxxx*1, MPAS-B*xxxx*2 • MPAI-B*xxxxx*	20 (65.6)	15 (49.2)
	• VP*x*-B100*xx*…VP*x*-B300*xx* • VPAR-B3*xxxx* • MPAR-B3*xxxx* • RDB-B*xxxxx*	• MP*x*-B3*xxx*…MP*x*-B9*xxx* • MPM-B115*xx*…MPM-B215*xx* • HPK-*xxxxxx*	50 (164)	30 (98.4)

(1) Corner-grounded and ungrounded input power can be used, but you must add an isolation transformer to the input power circuit to provide grounded-WYE power. Unbalanced, floating, or ungrounded systems can cause additional stress to the motor. For more information on these input power source types, see Input Power Configurations for Kinetix 5700 Power Supplies on page 123.

(2) Impedance grounded systems running in ground fault conditions, for prolonged periods of time, cause additional stress to the motor insulation and can cause premature motor failure.

Table 191 - Regenerative Bus Supply (400V AC input)

AC Input Power Source Type [1]	Motor/Actuator Cat. No.		Drive-to-Motor Cable Length, max m (ft)	
			With DC-bus Conditioner	Without DC-bus Conditioner
WYE Grounded	• LDAT-S*xxxxxx* • LDC-C*xxxxxx*	• MPAS-B8*xxx*F-ALM • MPAS-B9*xxx*L-ALM	10 (32.8)	10 (32.8)
	• VP*x*-B063*xx*, VP*x*-B075*xx* • MPL-B15*xx*, MPL-B2*xx* • VPAR-B1*xxxx*, VPAR-B2*xxxx*	• MPAR-B1*xxxx*, MPAR-B2*xxxx* • MPAS-B*xxxx*1, MPAS-B*xxxx*2 • MPAI-B*xxxxx*	50 (164)	30 (98.4)
	• VP*x*-B100*xx*…VP*x*-B300*xx* • VPAR-B3*xxxx* • MPAR-B3*xxxx* • RDB-B*xxxxx*	• MP*x*-B3*xxx*…MP*x*-B9*xxx* • MPM-B115*xx*…MPM-B215*xx* • HPK-*xxxxxx*	90 (295)	90 (295)
WYE Impedance Grounded [2]	• LDAT-S*xxxxxx* • LDC-C*xxxxxx*	• MPAS-B8*xxx*F-ALM • MPAS-B9*xxx*L-ALM	10 (32.8)	10 (32.8)
	• VP*x*-B063*xx*, VP*x*-B075*xx* • MPL-B15*xx*, MPL-B2*xx* • VPAR-B1*xxxx*, VPAR-B2*xxxx*	• MPAR-B1*xxxx*, MPAR-B2*xxxx* • MPAS-B*xxxx*1, MPAS-B*xxxx*2 • MPAI-B*xxxxx*	50 (164)	30 (98.4)
	• VP*x*-B100*xx*…VP*x*-B300*xx* • VPAR-B3*xxxx* • MPAR-B3*xxxx* • RDB-B*xxxxx*	• MP*x*-B3*xxx*…MP*x*-B9*xxx* • MPM-B115*xx*…MPM-B215*xx* • HPK-*xxxxxx*	90 (295)	90 (295)

(1) Corner-grounded and ungrounded input power can be used, but you must add an isolation transformer to the input power circuit to provide grounded-WYE power. Unbalanced, floating, or ungrounded systems can cause additional stress to the motor. For more information on these input power source types, see Input Power Configurations for Kinetix 5700 Power Supplies on page 123.

(2) Impedance grounded systems running in ground fault conditions, for prolonged periods of time, cause additional stress to the motor insulation and can cause premature motor failure.

Third-party Motor Configurations

These tables provide maximum drive-to-motor cable lengths for third-party motors with Kinetix 5700 common-bus supplies.

IMPORTANT Kinetix 5700 drive systems do not support the use of disconnection devices between the servo drive and motor.

DC-bus Power Supply Configurations

These tables assume that no output reactor is used between the inverter and the motor. Contact Technical Support for help when applying output reactor solutions.

Table 192 - DC-bus Power Supply (480V AC input)

AC Input Power Source Type	Motor Insulation Rating (3)	Drive-to-Motor Cable Length, max (4) m (ft)
WYE Grounded	1000V	–
	1200V	15 (49.2)
	1488V	90 (295)
	1600V	
Delta Corner Grounded	1000V	–
	1200V	–
	1488V	30 (98.4)
	1600V	90 (295)
• WYE Impedance Grounded (1) • WYE Ungrounded (2) • Delta Ungrounded (2)	1000V	–
	1200V	15 (49.2)
	1488V	90 (295)
	1600V	

(1) Impedance grounded systems running in ground fault conditions, for prolonged periods of time, cause additional stress to the motor insulation and can cause premature motor failure.
(2) Unbalanced, floating, ungrounded systems can cause additional stress to the motor.
(3) Motor Corona Inception Voltage (CIV) or Partial Discharge Inception Voltage (PDIV) ratings for motor phase-to-ground and phase-to-phase insulation systems.
(4) Cable lengths are estimated assuming nominal DC-bus voltage at nominal AC line input voltage. Operation at high AC line voltage or increased DC-bus voltage for prolonged periods of time can cause additional stress to the motor insulation and can cause premature motor failure.

Table 193 - DC-bus Power Supply (400V AC input)

AC Input Power Source Type	Motor Insulation Rating (3)	Drive-to-Motor Cable Length, max (4) m (ft)
WYE Grounded	1000V	10 (32.8)
	1200V	50 (164)
	1488V	90 (295)
	1600V	
Delta Corner Grounded	1000V	–
	1200V	15 (49.2)
	1488V	50 (164)
	1600V	90 (295)
• WYE Impedance Grounded (1) • WYE Ungrounded (2) • Delta Ungrounded (2)	1000V	10 (32.8)
	1200V	50 (164)
	1488V	90 (295)
	1600V	

(1) Impedance grounded systems running in ground fault conditions, for prolonged periods of time, cause additional stress to the motor insulation and can cause premature motor failure.
(2) Unbalanced, floating, ungrounded systems can cause additional stress to the motor.
(3) Motor Corona Inception Voltage (CIV) or Partial Discharge Inception Voltage (PDIV) ratings for motor phase-to-ground and phase-to-phase insulation systems.
(4) Cable lengths are estimated assuming nominal DC-bus voltage at nominal AC line input voltage. Operation at high AC line voltage or increased DC-bus voltage for prolonged periods of time can cause additional stress to the motor insulation and can cause premature motor failure.

Regenerative Bus Supply Configurations

These tables assume that no output reactor is used between the inverter and the motor. Contact Technical Support for help when applying output reactor solutions.

Table 194 - Regenerative Bus Supply (480V AC input)

AC Input Power Source Type (1)	Motor Insulation Rating (3)	Drive-to-Motor Cable Length, max (4) m (ft)	
		With DC-bus Conditioner	Without DC-bus Conditioner
WYE Grounded	1000V	–	–
	1200V	–	–
	1488V	30 (98.4)	15 (49.2)
	1600V	50 (164)	30 (98.4)
WYE Impedance Grounded (2)	1000V	–	–
	1200V	–	–
	1488V	30 (98.4)	15 (49.2)
	1600V	50 (164)	30 (98.4)

(1) Corner-grounded and ungrounded input power can be used, but you must add an isolation transformer to the input power circuit to provide grounded-WYE power. Unbalanced, floating, or ungrounded systems can cause additional stress to the motor. For more information on these input power source types, see Input Power Configurations for Kinetix 5700 Power Supplies on page 123.
(2) Impedance grounded systems running in ground fault conditions, for prolonged periods of time, cause additional stress to the motor insulation and can cause premature motor failure.
(3) Motor Corona Inception Voltage (CIV) or Partial Discharge Inception Voltage (PDIV) ratings for motor phase-to-ground and phase-to-phase insulation systems.
(4) Cable lengths are estimated assuming nominal DC-bus voltage at nominal AC line input voltage. Operation at high AC line voltage or increased DC-bus voltage for prolonged periods of time can cause additional stress to the motor insulation and can cause premature motor failure.

Table 195 - Regenerative Bus Supply (400V AC input)

AC Input Power Source Type (1)	Motor Insulation Rating (3)	Drive-to-Motor Cable Length, max (4) m (ft)	
		With DC-bus Conditioner	Without DC-bus Conditioner
WYE Grounded	1000V	–	–
	1200V	15 (49.2)	15 (49.2)
	1488V	90 (295)	90 (295)
	1600V		
WYE Impedance Grounded (2)	1000V	–	–
	1200V	15 (49.2)	15 (49.2)
	1488V	90 (295)	90 (295)
	1600V		

(1) Corner-grounded and ungrounded input power can be used, but you must add an isolation transformer to the input power circuit to provide grounded-WYE power. Unbalanced, floating, or ungrounded systems can cause additional stress to the motor. For more information on these input power source types, see Input Power Configurations for Kinetix 5700 Power Supplies on page 123.
(2) Impedance grounded systems running in ground fault conditions, for prolonged periods of time, cause additional stress to the motor insulation and can cause premature motor failure.
(3) Motor Corona Inception Voltage (CIV) or Partial Discharge Inception Voltage (PDIV) ratings for motor phase-to-ground and phase-to-phase insulation systems.
(4) Cable lengths are estimated assuming nominal DC-bus voltage at nominal AC line input voltage. Operation at high AC line voltage or increased DC-bus voltage for prolonged periods of time can cause additional stress to the motor insulation and can cause premature motor failure.

Regenerative Bus Supply Sequence Operation

In this appendix the sequencing of CIP™ axis states for Kinetix® 5700 regenerative bus supplies are explained. Timing diagrams illustrate when DC-bus voltage is applied and how the modules progress from PRECHARGE to RUNNING states. When in the RUNNING state, the regenerative bus supply is ready to provide full-line motoring and regenerative power to and from the Kinetix 5700 drive system.

Topic	Page
Converter Startup Method - Enable Request	414
Converter Startup Method - Automatic	417
Sequence Operation of Discharging	418

The Converter Startup Method is configured in the Studio 5000 Logix Designer® application. From the 2198-RP*xxx* module Axis Properties>General category, you can choose between Enable Request (default) and Automatic.

Figure 202 - Axis Properties>General Category

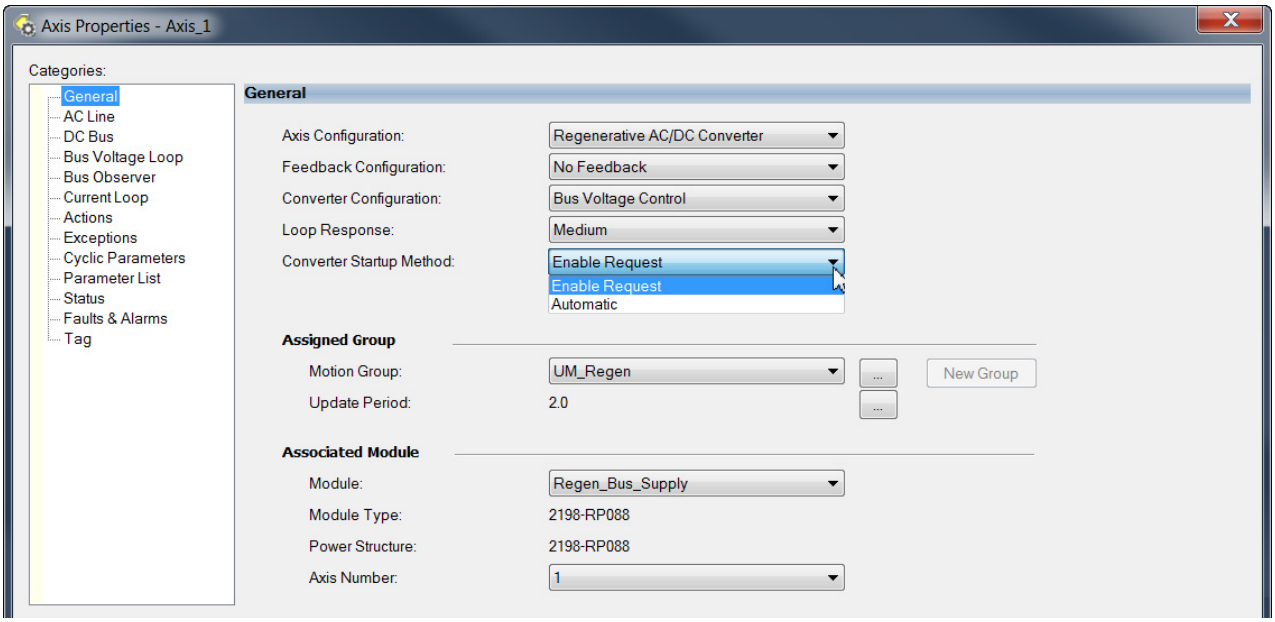

Converter Startup Method - Enable Request

When the Enable Request method is selected, a Motion Servo On (MSO) commend is required for the regenerative bus supply to transition from the STOPPED state to the RUNNING state.

Figure 203 - Sequence Operation of Precharging - Enable Request Method

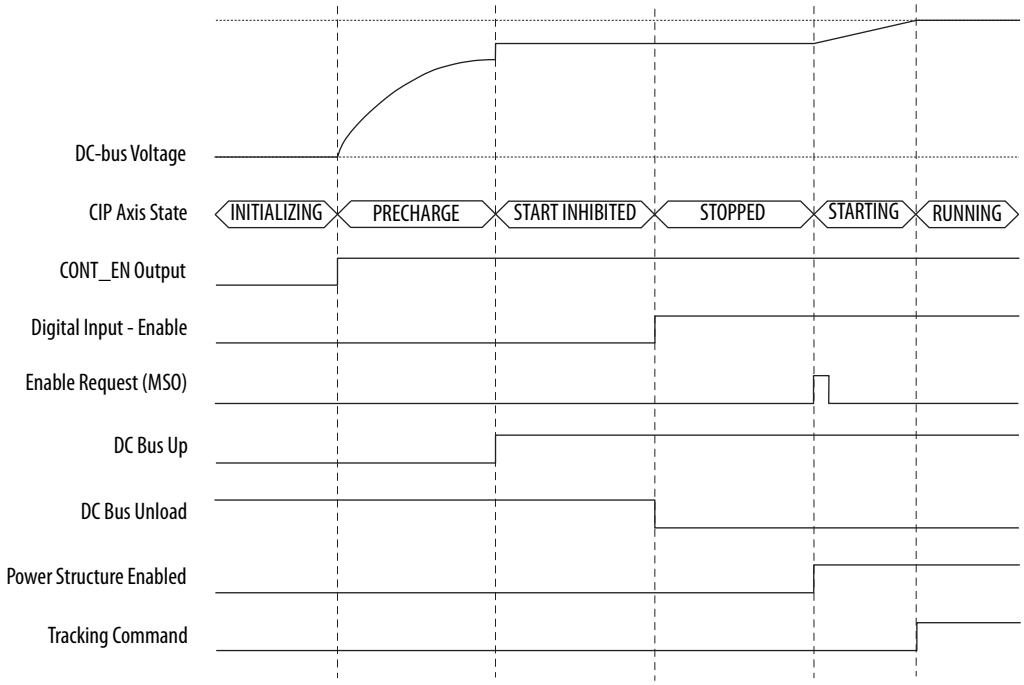

Initialization

The 2198-RP*xxx* regenerative bus supply uses the AB:MotionDevice_Diagnostics:S:0 tag data type.

Initialization consists of these four events:

- A connection is established between the controller and regenerative bus supply, through a forward open request from the controller
- The regenerative bus supply receives the configuration from the controller
- The Group Sync Service synchronizes with the regenerative bus supply
- The configuration and power are verified for the axes and associated modules in the Motion Group.

Following initialization, the regenerative bus supply transitions to the PRECHARGE state.

Precharge

When initialization is complete, the contactor enable relay closes, causing the M1 contactor to close, and precharge begins through the DC-bus resistor (see Regenerative Bus Supply Configuration on page 348 for an example interconnect diagram).

There is approximately 2.4 seconds of DC-bus precharge time plus 1.0 second relay-closing time for approximately 3.4 seconds total precharge time. This is consistent across all four 2198-RP*xxx* units.

The DC-bus resistor is not field replaceable nor can we measure the resistance externally. Once in the PRECHARGE state, the DC Bus Up status goes high and the regenerative bus supply transitions to the START INHIBITED state.

Start Inhibited

The digital inputs associated with the regenerative bus supply can be configured to cause the Converter Axis CIP Drive to go to a START INHIBITED state.

Figure 204 - Configure Digital Inputs

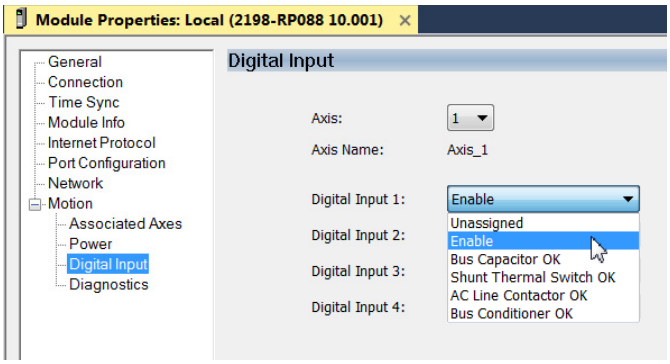

Enable is the default setting for Digital Input 1. When the Enable input is wired in the system it provides the ability to physically control the transition into the RUNNING state.

External 24V DC to IN1 on the IOD connector through the Enable permissive circuit (possibly a red top mushroom E-stop) with 24V DC common to COM on the Digital Inputs (IOD) connector is required to remove the START INHIBITED condition.

See Contactor Wiring for Regenerative Bus Supply on page 358 for an example of how the digital input option is used.

If no Enable digital input is assigned or the correct inputs are seen, the regenerative bus supply moves to the STOPPED state.

Stopped

With DC-bus Up high and DC-bus Unload low, the regenerative bus supply is in a STOPPED state.

When configured for Enable Request, a Motion Servo On (MSO) commend is required for the regenerative bus supply to transition from the STOPPED state to the RUNNING state.

- In the RUNNING state, the regenerative bus supply is ready to provide full-line motoring and regenerative power to and from the Kinetix 5700 drive system.
- While in the STOPPED state, the regenerative bus supply provides full-line motoring power, however, regeneration will not occur.

After issuing a Motion Servo On command, the regenerative bus supply transitions to the STARTING state.

Starting

When the regenerative bus supply is in the STARTING state, the PowerStructureEnabledStatus tag equals 1, the IGBTs turn on, and the DC-bus increases by 5%. The regenerative bus supply then transitions to the RUNNING state.

Running

When the regenerative bus supply is in the RUNNING state, the TrackingCommandStatus tag equals 1 indicating that the regenerative bus supply is capable of both motoring and regenerating requirements.

The following code can be used to indicate that the regenerative bus supply is running and ready for both motoring and regeneration.

Figure 205 - Ready for Motoring and Regeneration

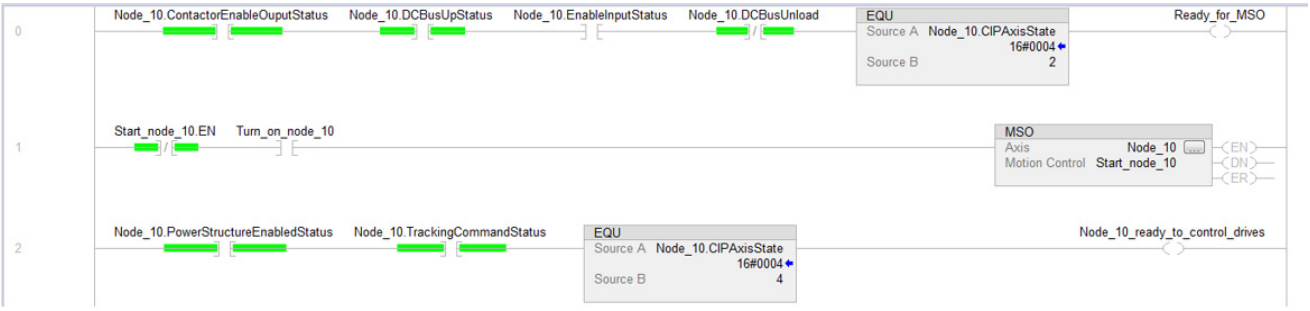

Converter Startup Method - Automatic

With the Automatic method, everything in the Enable Request sequence applies, except there is no STOPPED state or any need for the Motion Servo On (MSO) command. The regenerative bus supply automatically transitions to the RUNNING state.

Figure 206 - Sequence Operation of Precharging - Automatic Method

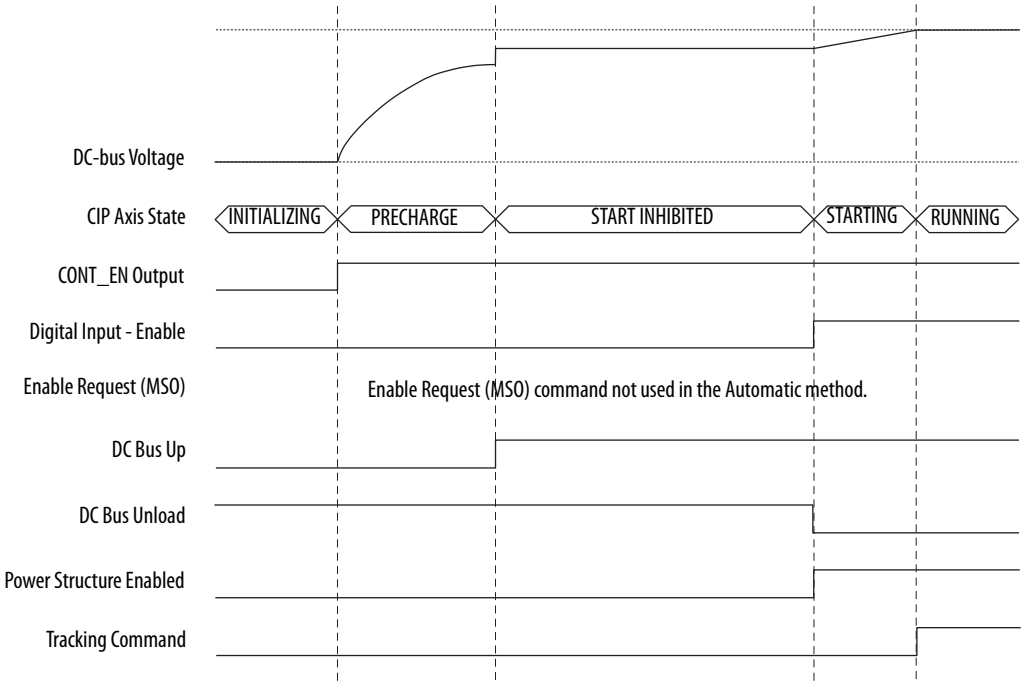

Sequence Operation of Discharging

In the discharging sequence, the regenerative bus supply begins in the RUNNING state and transitions to the STOPPED state following a Motion Servo Off (MSF) command. If a Motion Axis Shutdown (MASD) command is executed, the regenerative bus supply transitions to the SHUTDOWN state, and a Motion Axis Shutdown Reset (MASR) command must be executed to transition out of the SHUTDOWN state.

Figure 207 - Sequence Operation of Discharging - Enable Request Method

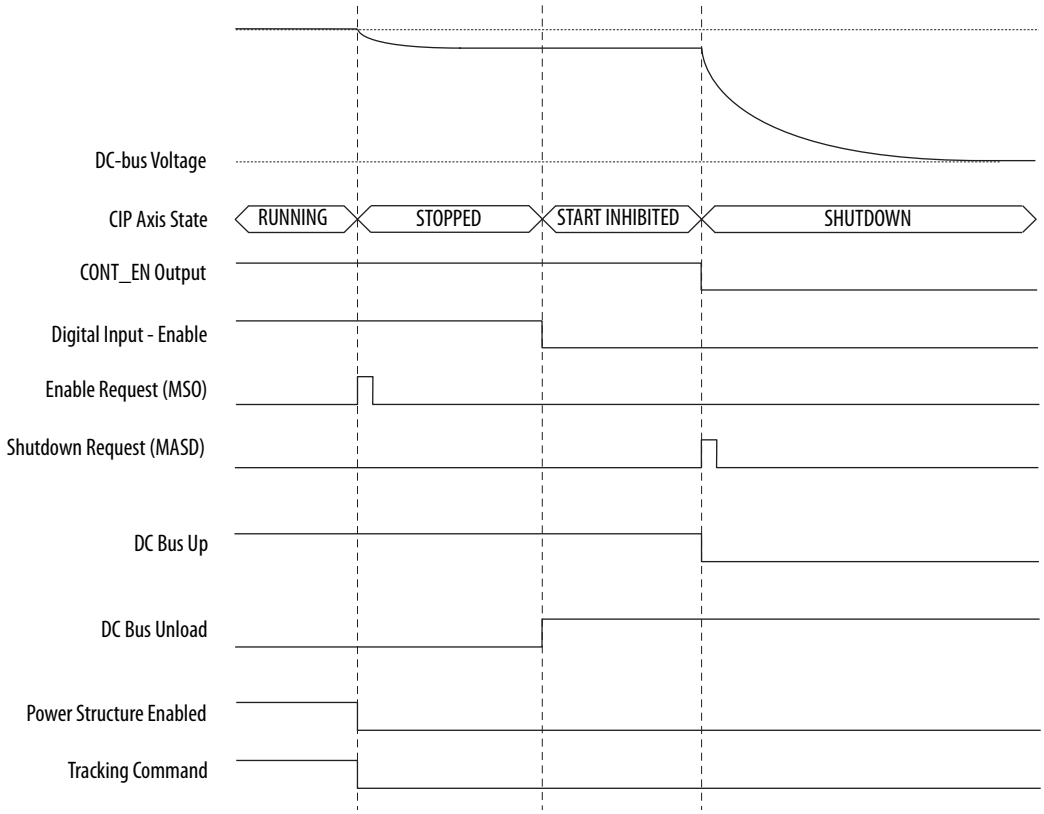

Motor Control Feature Support

This appendix provides feature descriptions for the induction motors and permanent-magnet motors that are supported by Kinetix® 5700 servo drives.

Topic	Page
Frequency Control Methods	420
Current Limiting for Frequency Control	424
Stability Control for Frequency Control	427
Skip Speeds	429
Flux Up	431
Current Regulator Loop Settings	434
Motor Category	434
Selection of Motor Thermal Models	440
Speed Limited Adjustable Torque (SLAT)	442
Motor Overload Retention	453
Phase Loss Detection	454
Velocity Droop	457
Commutation Self-sensing Startup	458
Commutation Test	460
Adaptive Tuning	460
Virtual Torque Sensor	461
Field Weakening Mode	462

Frequency Control Methods

The Kinetix 5700 servo drives support three open-loop frequency control methods. These are the choices:

- **Basic Volts/Hertz** - This method is used in single asynchronous-motor applications
- **Basic Volts/Hertz - Fan Pump** - This method is similar to Basic Volts/Hertz, but is specifically tailored for fan/pump applications
- **Sensorless Vector with Slip Compensation** - This method is used for most constant torque applications. Provides excellent starting, acceleration, and running torque

To configure your induction motor in the Logix Designer application, refer to Configure Induction-motor Frequency-control Axis Properties on page 233.

Open-loop frequency control is suitable in applications such as conveyors, pumps, and fans. Features include the following:

- Start Boost and Run Boost
- Electronic motor thermal-overload protection per Class 10 requirements
- Two skip frequencies, in which the drive does not operate
- All three-phase induction motors, suitable for variable speed drive (VFD) operation, are supported

Table 196 - Motor Specifications

Attribute	Value
Output frequency, max	590 Hz
Pole pairs, max	50
Motor cable length, max	90 m (295 ft) (1)

(1) Applies to all Kinetix 5700 drives and compatible motors/actuators with Hiperface and Hiperface DSL high-resolution absolute feedback. For compatible motors/actuators with incremental feedback, 30 m (98 ft) is the maximum cable length.

Basic Volts/Hertz

Volts/hertz operation creates a fixed relationship between output voltage and output frequency. Voltage is applied to the motor, which is based on the operating frequency command at a fixed volts/hertz ratio. The ratio is calculated from the motor nameplate data and entered into the Logix Designer application>Axis Properties>Frequency Control category.

The Basic Volts/Hertz method provides various patterns. The default configuration is a straight line from zero to rated voltage and frequency. As seen in Figure 208, you can change the volts/hertz ratio to provide increased torque performance when required by programming five distinct points on the curve.

Table 197 - Basic Volts/Hertz Definitions

Curve Feature	Definition
Start boost	Used to create additional torque for breakaway from zero speed and acceleration of heavy loads at lower speeds.
Run boost	Used to create additional running torque at low speeds. The value is typically less than the required acceleration torque. The drive lowers the boost voltage to this level when running at low speeds (not accelerating). This reduces excess motor heating that could result if the higher start/accel boost level were used.
Break voltage/frequency	Used to increase the slope of the lower portion of the Volts/Hertz curve, providing additional torque.
Motor nameplate voltage/ frequency	Sets the upper portion of the curve to match the motor design. Marks the beginning of the constant power region.
Maximum voltage/frequency	Slopes the portion of the curve that is used above base speed.

Figure 208 - Basic Volts/Hertz Method

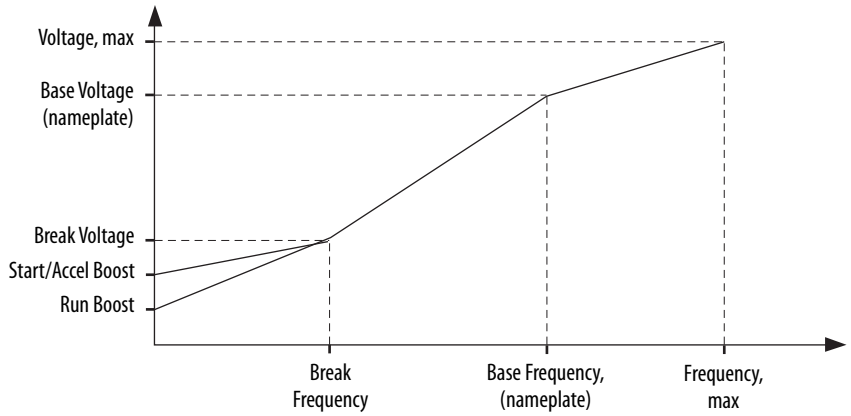

Basic Volts/Hertz for Fan/Pump Applications

The Basic Volts/Hertz Fan/Pump (fan/pump) method is based on the Basic Volts/Hertz (V/Hz) method, but is specifically tailored for fan/pump applications.

Figure 209 - Output Voltage Equation

$$V_x = \left(\frac{f_x}{f_n}\right)^2 \left(V_n - V_{boost}\right) + V_{boost}$$

Where:
V_x = Output voltage
f_x = Output frequency
V_n = Rated voltage
F_n = Rated frequency
V_{boost} = Run boost voltage

For maximum system efficiency, fan/pump loads use variable frequency drives that are equipped with a specific V/Hz curve where voltage is proportional to square of the frequency.

Figure 210 - Basic Volts/Hertz Fan/Pump Method

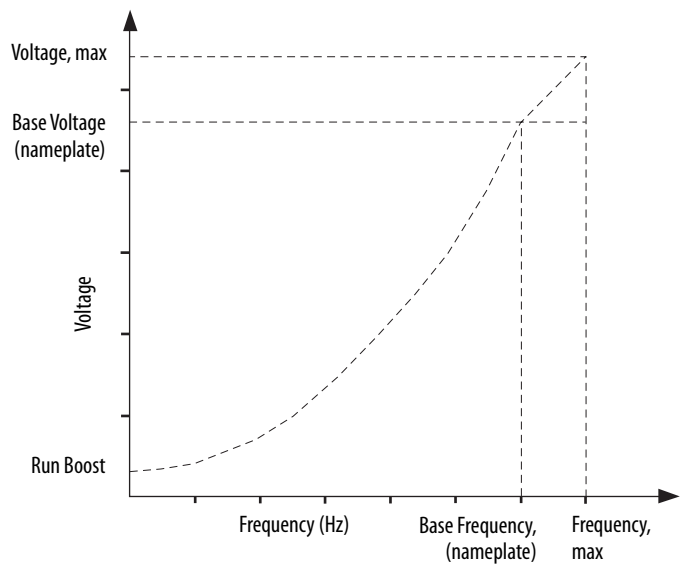

TIP The Fan/Pump control method supports the run-boost attribute, but does not support break-voltage, break-frequency, or start-boost.

Sensorless Vector

The Sensorless Vector method uses a volts/hertz core enhanced by a current resolver, slip estimator, and a voltage-boost compensator based on the operating conditions of the motor.

Figure 211 - Sensorless Vector Method

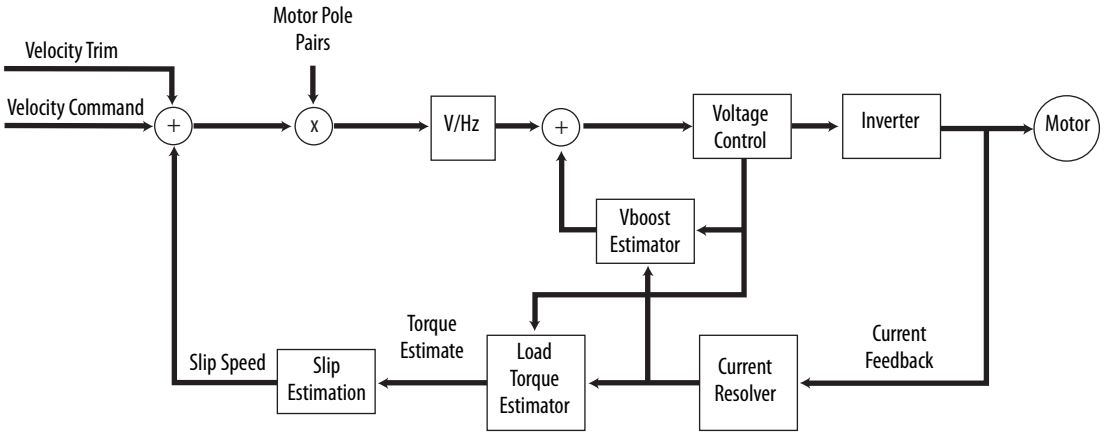

The algorithms operate on the knowledge of the relationship between the rated slip and torque of the motor. The drive uses applied voltages and measured currents to estimate operating slip-frequency. You can enter values to identify the motor resistance value or you can run a motor test to identify the motor resistance value (see Motor Tests and Autotune Procedure on page 436). Motor nameplate data and test results are ways to accurately estimate the required boost voltage.

The sensorless vector method offers better torque production and speed regulation over a wider speed range than basic volts/hertz.

Dynamic boost is applied internally to compensate voltage drop and improve starting torque.

Figure 212 - Approximate Load Curve

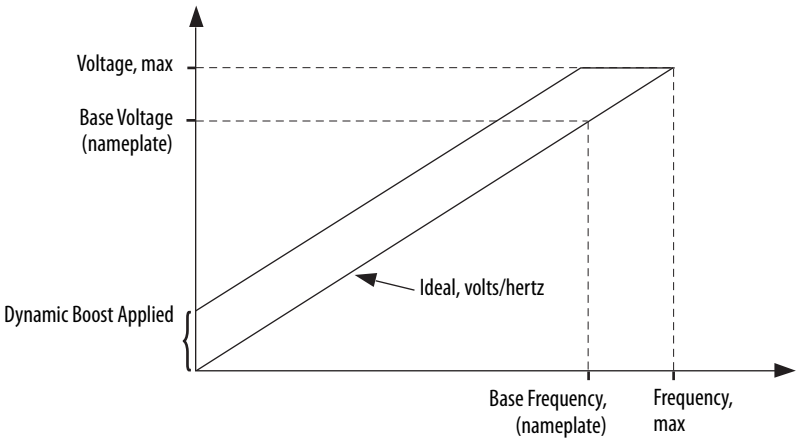

Current Limiting for Frequency Control

The current limiting module prevents the OutputCurrent value from exceeding the OperativeCurrentLimit value when the drive is configured in Frequency Control mode.

Figure 213 - Current Limiting Module

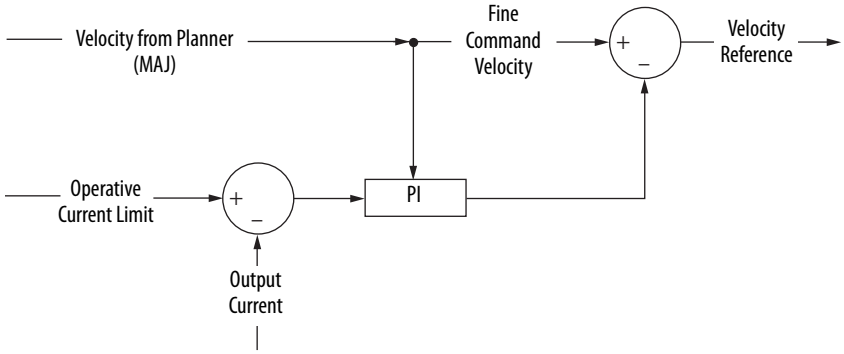

In Frequency Control mode, OperativeCurrentLimit is the minimum value of the motor-thermal current limit, inverter-thermal current limit, motor-peak current limit, drive-peak current limit, and the CurrentVectorLimit value.

The Effects of Current Limiting

Indirect current limiting is available for induction motors configured for frequency control. You can use this feature to help prevent overcurrent faults due to aggressive acceleration/deceleration profiles or impact loads. The Current Limiting attribute uses a PI regulator to control the OutputCurrent by adjusting the velocity reference.

IMPORTANT When configured for Frequency Control (induction motors only), select the Decel and disable stopping action only when the Current Limiting feature is enabled.

Figure 214 - Effects of Current Limiting on an Aggressive Acceleration

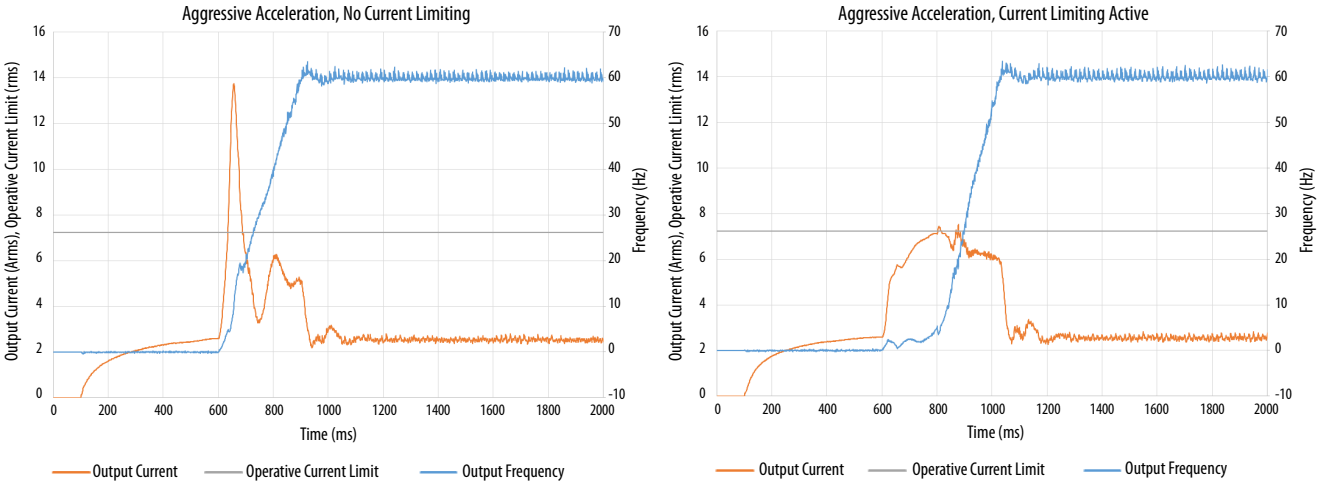

Figure 215 - Effects of Current Limiting on an Impact Load

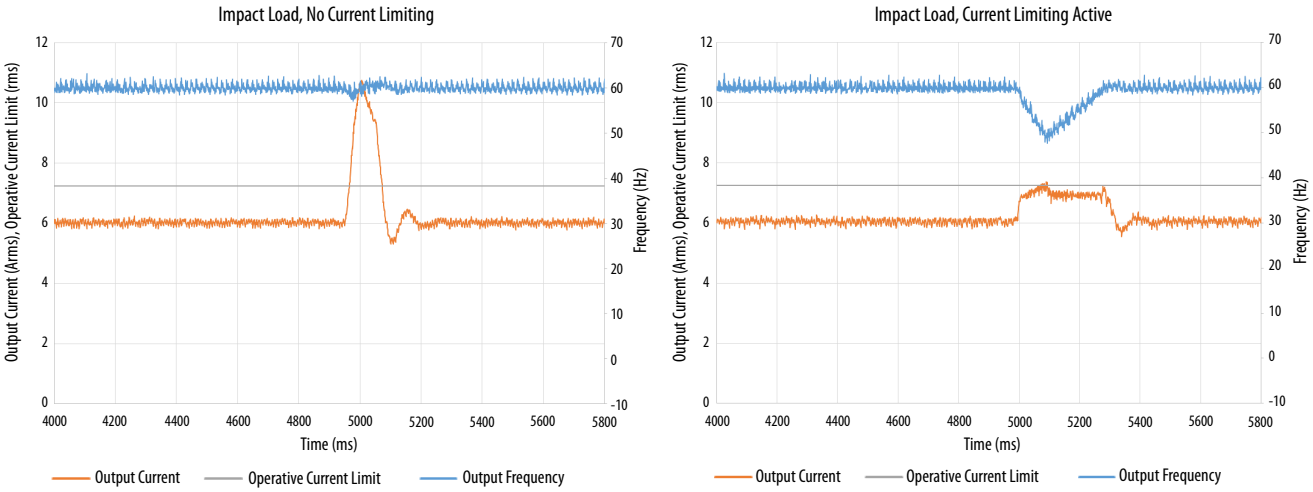

Current limiting for frequency control is not enabled by default. You can enable via messaging by using the following device-specific attributes.

TIP We recommend you leave the Kp, Ki, Kd gains at the default values.

Table 198 - Enable Current Limiting via Messaging

Attribute Offset	Type	Attribute Name	Conditional Implementation	Description
3022	SINT	Current Limiting Enable	Frequency Control Induction Motor only	When enabled, limits the rate of change to the velocity reference during high-current situations for improved current limiting. This feature is only active when executing an MDS command and when configured for Frequency Control. 0 = Current Limiting is disabled 1 = Current Limiting is enabled
3023	REAL	Current Limiting Kd		Derivative gain for the current limiting function. Only functional when configured for Frequency Control and when executing an MDS command. Units of seconds.
3024	REAL	Current Limiting Ki		Integral gain for the current limiting function. Only functional when configured for Frequency Control and when executing an MDS command. Units of feedback counts / (Amp, inst* Seconds).
3025	REAL	Current Limiting Kp		Proportional gain for the current limiting function. Only functional when configured for Frequency Control and when executing an MDS command. Units of feedback counts / Amp, inst.

IMPORTANT For induction motors greater than 5 Hp, it is recommended that the Stability Control feature also be enabled when Current Limiting is enabled.

Enable the Current Limiting Feature

In this example, a Message Configuration (MSG) instruction is configured to set the CurrentLimitingEnable attribute for axis 3 of a dual-axis inverter. The Instance field is used to direct the message to the proper axis. For single-axis inverters the value of 1 is used for Instance.

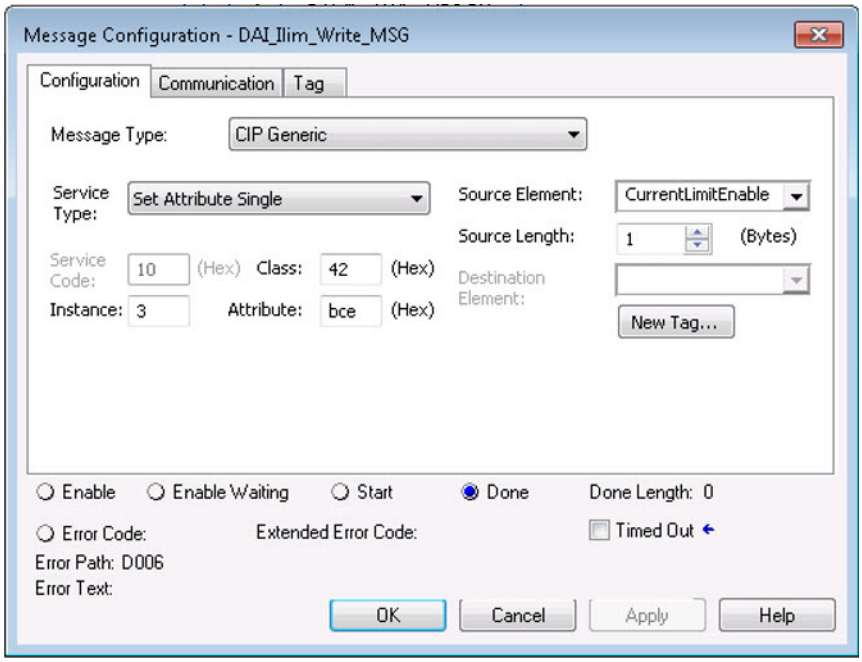

Set the CurrentVectorLimit Attribute Value

For current limiting, the CurrentVectorLimit attribute is used to help determine the OperativeCurrentLimit of the drive. Set the CurrentVectorLimit value to artificially lower OperativeCurrentLimit below the drive or motor peak current limits.

1. Select the Parameter List category and scroll to CurrentVectorLimit.

CoastingTimeLimit	0.0	s
ConversionConstant	1000000.0	Motion Counts/Position Units
CurrentVectorLimit	100.0	% Motor Rated
FluxUpControl	No Delay	
FluxUpTime	0.0	s

2. Set the CurrentVectorLimit value appropriate for your application.

IMPORTANT The CurrentVectorLimit attribute appears in the Parameter List of the Logix Designer application, version 29.00 and later. If you are using a previous version, the CurrentVectorLimit attribute must be set via a Message Configuration (MSG) instruction.

Stability Control for Frequency Control

Stability control is available for induction motors configured for frequency control. This feature can be used to help remove resonances that are sometimes seen on larger motors. The stability control feature adjusts the OutputFrequency and OutputVoltage commands to stabilize the OutputCurrent.

Figure 216 - Effects of Stability Control

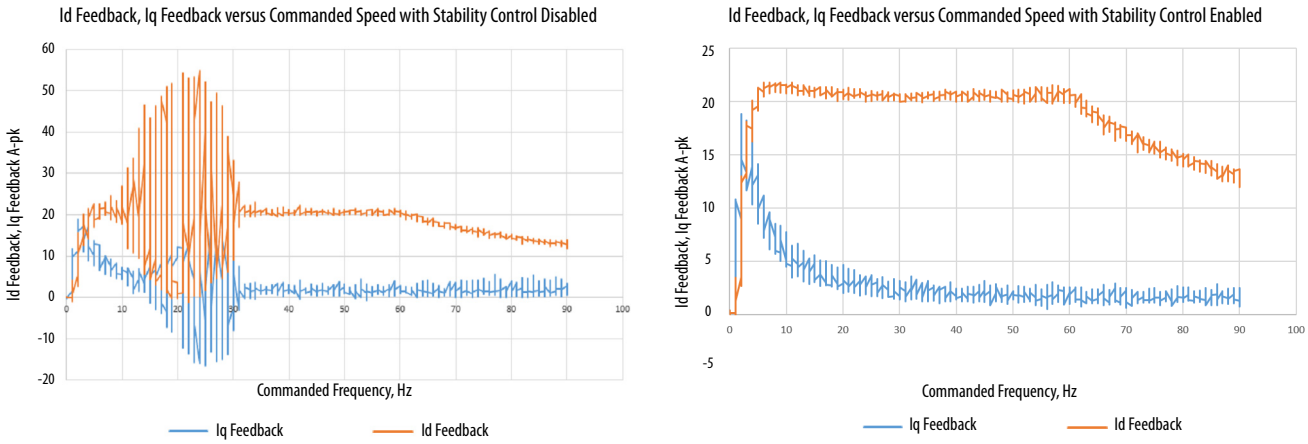

Stability control for frequency control is not enabled by default. You can enable via messaging by using the following device-specific attributes.

TIP We recommend you leave the angle, voltage gains, and filter bandwidth at the default values.

Table 199 - Enable Current Limiting via Messaging

Attribute Offset	Type	Attribute Name	Conditional Implementation	Description
3026	SINT	Stability Control Enable	Frequency Control Induction Motor only	Enables stability control when configured for frequency control. 0 = Stability Control is disabled 1 = Stability Control is enabled
3027	REAL	Stability Filter Bandwidth		Sets the bandwidth of the low-pass filter applied to the current feedback signal. This bandwidth is common to both the angle and voltage stability control algorithms. Units of radians/second.
3028	REAL	Stability Voltage Gain		The gain of the voltage stability control function. Only active when configured for frequency control. Units of Volt (inst,p-n)/Amp (inst).
3029	REAL	Stability Angle Gain		The gain of the electrical angle stability control function. Only active when configured for frequency control. Units of radians/Amp (inst).

IMPORTANT Because the stability control feature works by manipulating the OutputVoltage and OutputFrequency signals, these signals may appear 'noisy' when the feature is enabled.

Enable the Stability Control Feature

In this example, a Message Configuration (MSG) instruction is configured to enable the StabilityControl attribute for axis 3 of a dual-axis inverter. The Instance field is used to direct the message to the proper axis. For single-axis inverters the value of 1 is used for Instance.

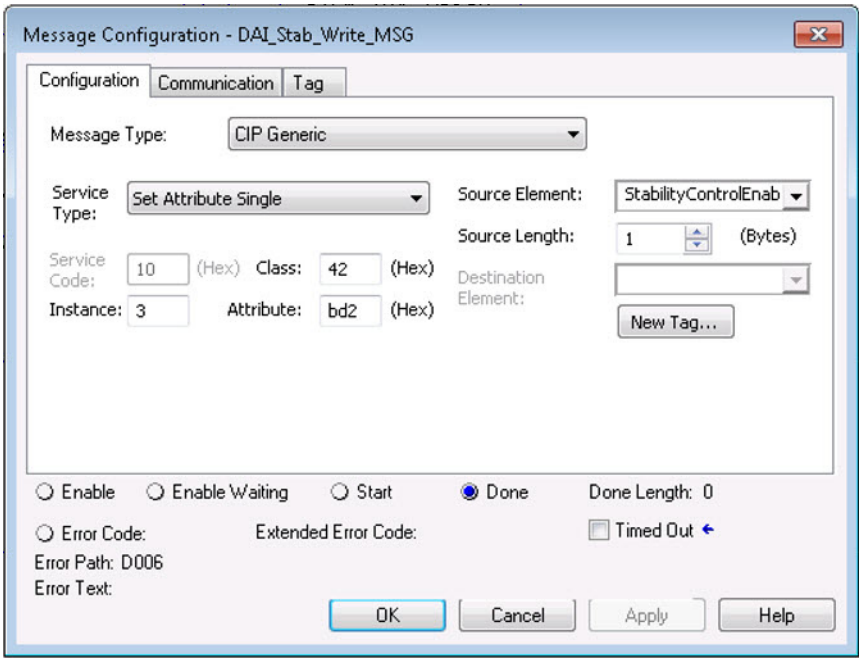

Skip Speeds

Some machines have a resonant operating frequency (vibration speed) that is undesirable or could cause equipment damage. To guard against continuous operation at one or more resonant points, you can configure the skip-speed attributes in the Logix Designer application>Axis Properties>Parameter List category.

The value that is programmed into the SkipSpeed1 or SkipSpeed2 attribute sets the central speed of a skip-speed band within which the drive does not operate. The width of the band is determined by the SkipSpeedBand attribute. The range is split, half above and half below the SkipSpeed*x* attribute. Any command set-point within this band is adjusted by the skip-speed feature to fall at either the upper or lower skip-speed band boundary value. The skip-speed feature contains hysteresis (25% of the SkipSpeedBand value) to prevent frequent switching of VelocityReference.

Figure 217 - Single Skip Speed Example

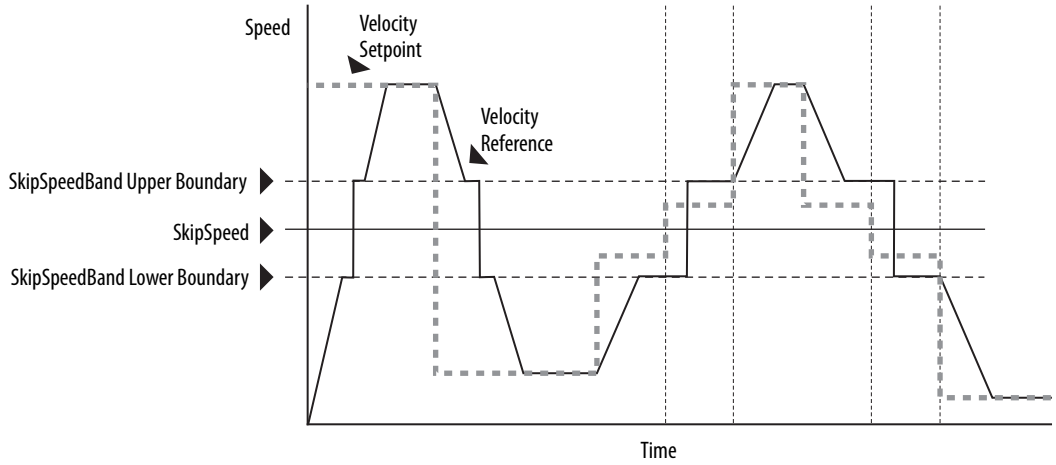

A SkipSpeedBand value of 0 disables the skip-speed feature.

IMPORTANT	When a single SkipSpeed value is desired, the SkipSpeed1 and SkipSpeed2 settings must be the same.

IMPORTANT	Acceleration and deceleration are affected by the skip-speed feature. Too large of a SkipSpeedBand value can result in an overcurrent drive fault.

IMPORTANT	The MaximumFrequency attribute is always enforced. Skip-speed band boundary values beyond the MaximumFrequency value do not apply.

Multiple Skip Speeds

The Kinetix 5700 drives feature two independent skip-speed attributes (SkipSpeed1 and SkipSpeed2) that use the same SkipSpeedBand.

Figure 218 - Multiple Skip Speed Example

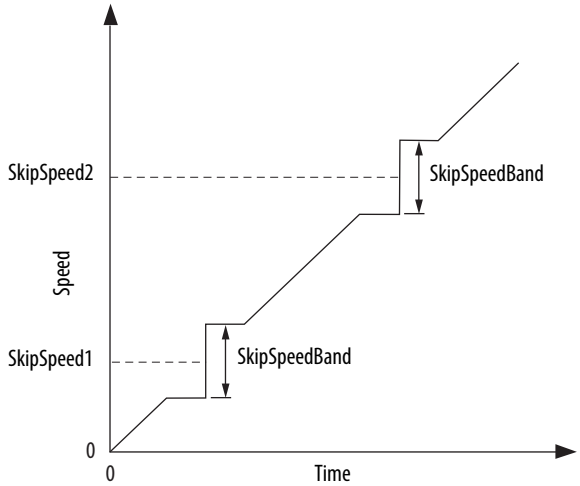

When skip-speed band boundaries of SkipSpeed1 and SkipSpeed2 overlap, the skip-speed hysteresis is calculated using the effective skip band.

In Figure 219, SkipSpeed1 is set to 0 and SkipSpeed2 is set to 15 hz. The skip band is 10 Hz wide.

At point A the axis is enabled, and the motor begins to rotate at -5 Hz even though the command is 0 Hz. As the command reaches hysteresis point the output frequency begins to follow the command. During deceleration, when the command decreases to 0 Hz, the output frequency continues at 5 Hz until the axis is disabled (point B), or the command is changed outside of the skip band.

Figure 219 - Zero-speed Skip Frequency

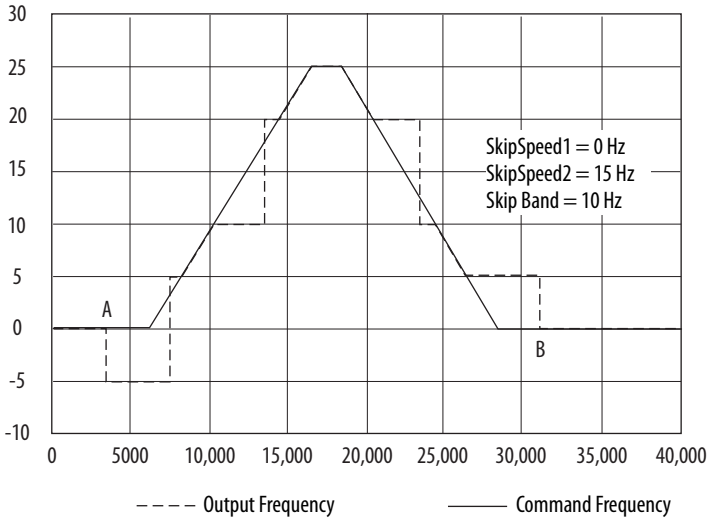

Flux Up

AC induction motors require that flux builds in the motor stator before controlled torque can develop. To build flux, voltage is applied. There are two methods to flux the motor and three configurable FluxUpControl settings.

With the No Delay setting (normal start), flux is established when the output voltage and frequency are applied to the motor. While flux is building, the unpredictable nature of the developed torque can cause the rotor to oscillate even though acceleration of the load can occur. In the motor, the acceleration profile does not follow the commanded acceleration profile due to the lack of developed torque.

Figure 220 - Acceleration Profile during Normal Start - No Flux Up

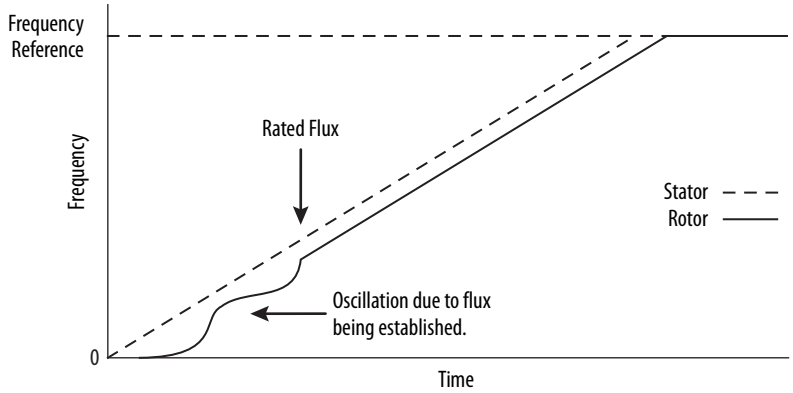

With the Automatic setting (default) DC current is applied to the motor so that flux builds before rotation. The flux-up time period is based on the level of flux-up current and the rotor time constant of the motor. The flux-up current is not adjustable.

In the Manual setting, DC current is applied to the motor so that flux builds before rotation. The flux-up time period is determined by the FluxUpTime attribute. The flux-up current is not adjustable.

Figure 221 - Flux Up Current versus Flux Up Time

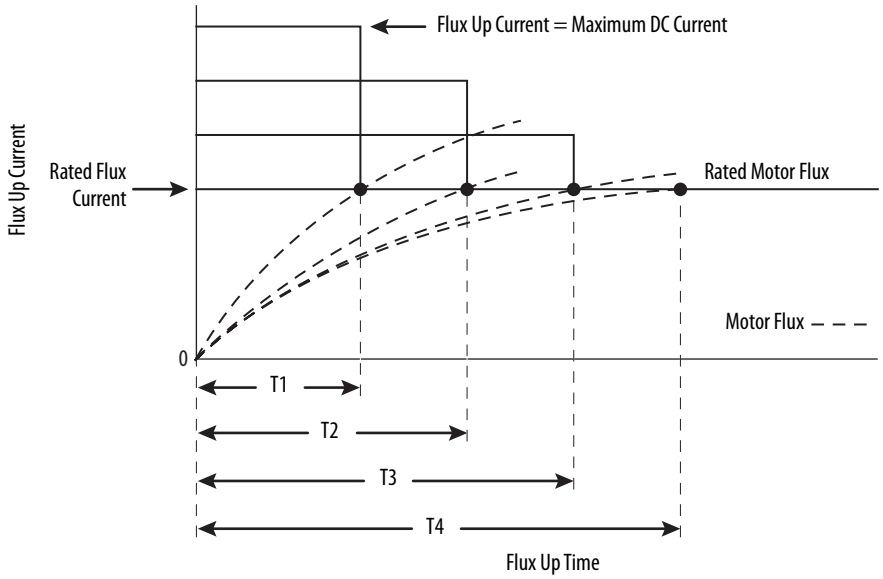

Once rated flux is reached in the motor, normal operation can begin and the desired acceleration profile achieved.

Figure 222 - Rated Flux Reached

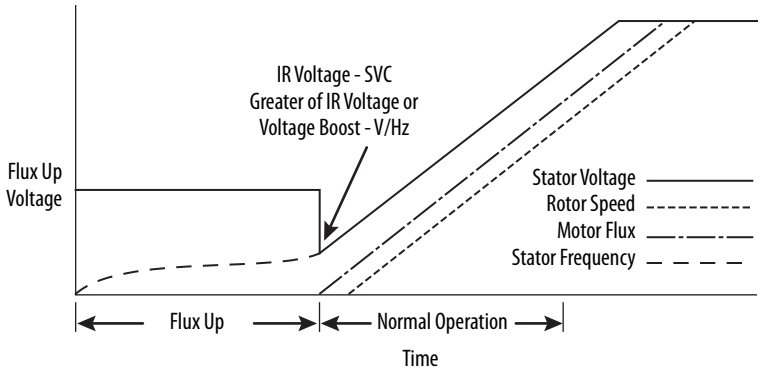

Flux Up Attributes

ID	Access	Attribute	Conditional Implementation
558	Set	Flux Up Control	Ind Motor only 0 = No Delay 1 = Manual Delay 2 = Automatic Delay
559	Set	Flux Up Time (1)	Ind Motor only Units: Seconds Default: 0.0000 Min/Max: 0.0000 / 1000.00

(1) This is the time designated for the Manual Delay setting. This attribute is not supported by the Automatic delay method. The flux-up feature is disabled if FluxUpControl is set to Manual Delay and FluxUpTime is set to 0.

FluxUpControl Attribute

When the motion axis is enabled, DC current is applied to an induction motor to build stator flux before transitioning to the Running state. This attribute controls how an induction motor is to be fluxed in the Starting state prior to transitioning to the Running state.

Table 200 - FluxUp Control Delay Methods

Delay Method	Description
No delay	The axis transitions immediately to the Running state while the motor flux is building.
Manual delay	The axis remains in the Starting state while the motor stator flux is building according to the Flux Up Time attribute.
Automatic delay	The drive determines the amount of delay time to fully flux the motor based on the motor configuration attribute data or measurements.

FluxUpTime Attribute

When FluxUpControl is configured for Manual Delay, this attribute sets the length of delay time to fully flux the motor before transitioning to the Running state.

Configure the Flux Up Attributes

Follow these steps to configure the flux-up attributes.

1. In the Controller Organizer, right-click an axis and choose Properties.
2. Select the Parameter List category and scroll to FluxUpControl.

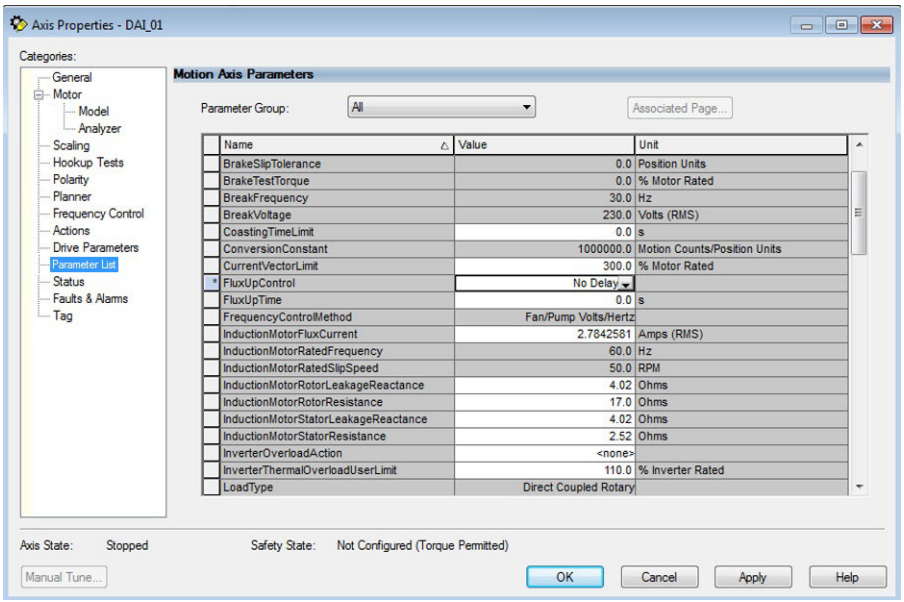

3. From the FluxUpControl pull-down menu, choose the proper delay value appropriate for your application.

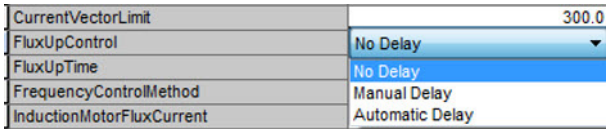

4. If you chose Manual Delay in step 3, enter a value in the FluxUpTime attribute appropriate for your application.

   If you chose No Delay or Automatic Delay in step 3, the FluxUpTime attribute does not apply.

Current Regulator Loop Settings

Current loop bandwidth is set differently based on the selected motor type.

Table 201 - Current Regulator Loop Settings

Motor Type	Default Torque/Current Loop Bandwidth Hz
Rotary permanent magnet	1000
Rotary interior permanent magnet	
Linear permanent magnet	
Rotary induction	400

IMPORTANT The Logix Designer application does not perform calculations when the Torque/Current Loop Bandwidth attribute is updated. This bandwidth affects many other gains and limits. Changing, (lowering) the torque loop bandwidth without updating all the dependent attributes can result in drive/motor instability.

Motor Category

From the Motor category you can enter motor nameplate or datasheet values (phase-to-phase parameters) for rotary induction motors.

In this example, the Motor category>Nameplate / Datasheet parameters, were taken from a typical motor performance datasheet. Max Speed and Peak Current values are typically application dependent.

Figure 223 - Motor Nameplate / Datasheet Example

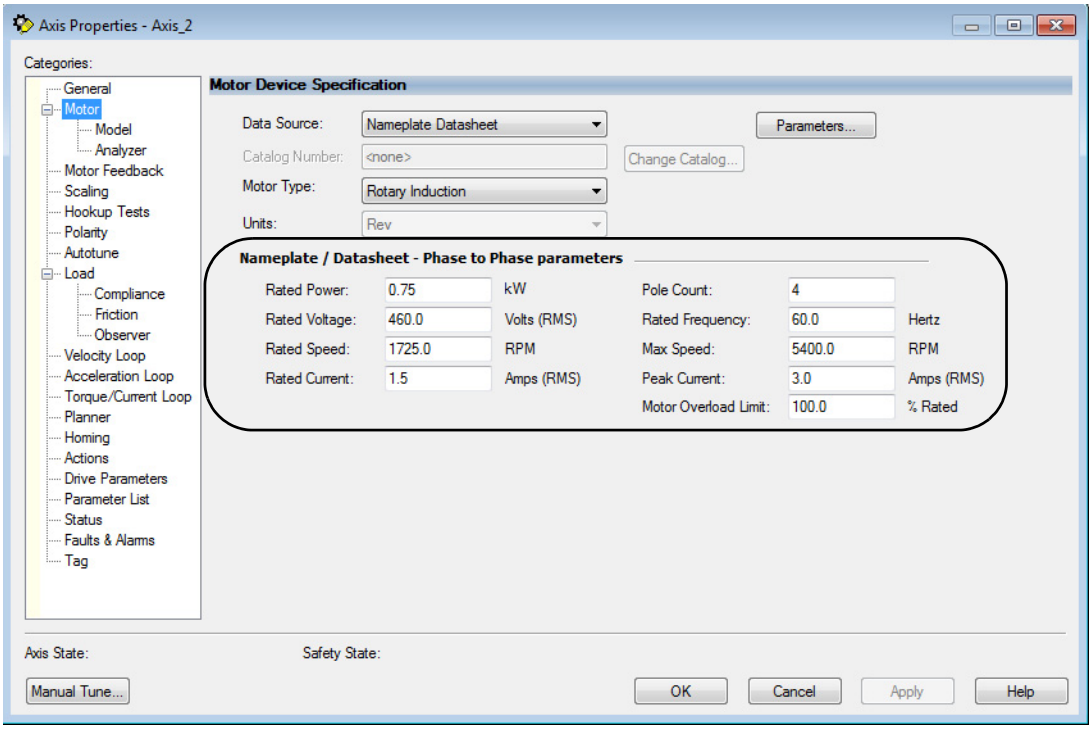

See Figure 224 for motor manufacturer performance data sheet example.

Figure 224 - Motor Manufacturer Performance Data Sheet

CERTIFICATION DATA SHEET

TYPICAL MOTOR PERFORMANCE DATA

HP	kW	SYNC. RPM	F.L. RPM	FRAME	ENCLOSURE	KVA CODE	DESIGN
1	.75	1800	1725	56C	TENV	P	A

PH	Hz	VOLTS	FL AMPS	START TYPE	DUTY	INSL	S.F.	AMB°C	ELEVATION
3	60	460	1.5	INVERTER ONLY	CONTINUOUS	F3	1.0	40	3300

FULL LOAD EFF: 84	3/4 LOAD EFF: 82.5	1/2 LOAD EFF: 78.5	GTD. EFF	ELEC. TYPE	NO LOAD AMPS
FULL LOAD PF: 75	3/4 LOAD PF: 65.5	1/2 LOAD PF: 51	81.5	SQ CAGE INV DUTY	1

F.L. TORQUE	LOCKED ROTOR AMPS	L.R. TORQUE	B.D. TORQUE	F.L. RISE°C
3 LB-FT	30 / 15	10.8 LB-FT 360%	15 LB-FT 500%	65

SOUND PRESSURE @ 3 FT.	SOUND POWER	ROTOR WK^2	MAX. WK^2	SAFE STALL TIME	STARTS / HOUR	APPROX. MOTOR WGT
62 dBA	72 dBA	0.11 LB-FT^2	0 LB-FT^2	0 SEC.	0	42 LBS.

EQUIVALENT WYE CKT.PARAMETERS (OHMS PER PHASE)

R1	R2	X1	X2	XM
8.378	5.6232	10.7068	9.9116	278.036

RM	ZREF	XR	TD	TD0
11132.8	284	1.7	0.0071	0.136

Motor>Model Category

From the Motor>Model category you can enter additional motor nameplate or datasheet values (phase-to-neutral parameters) for induction motors.

The Motor>Model parameters are used in closed-loop induction-motor control mode, sensorless vector control mode, and when FluxUp is enabled, and are estimated automatically by the Logix Designer application based on the motor nameplate data. You can also enter these parameter values directly from the motor nameplate/datasheet or indirectly by running a Motor>Analyzer test.

Figure 225 - Phase-to-Neutral Parameters

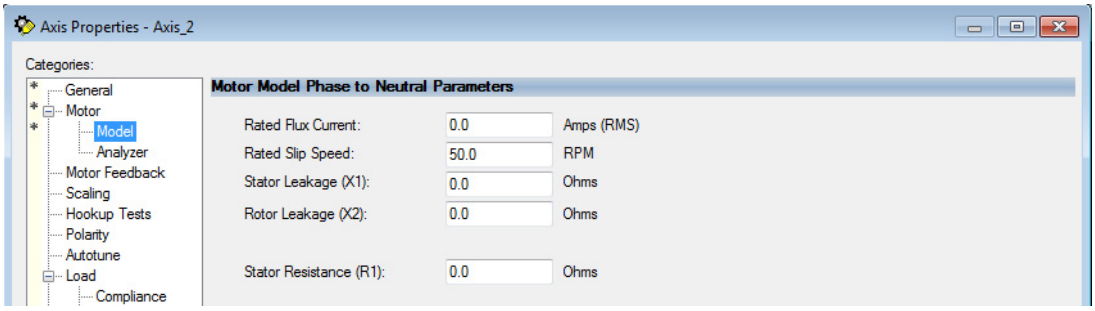

IMPORTANT If you do not know the Stator Leakage, Rotor Leakage, Stator Resistance, Rated Flux Current, and system inertia, you can run the static motor test and Autotune procedure to determine the parameter values.

Motor>Analyzer Category

From the Motor>Analyzer category you can perform three types of tests to identify motor parameters.

In this example, the Calculate Model test was run. If the Motor>Analyzer test executes successfully, and you accept the test values, they populate the Model Parameter attributes.

Figure 226 - Motor Analyzer Category

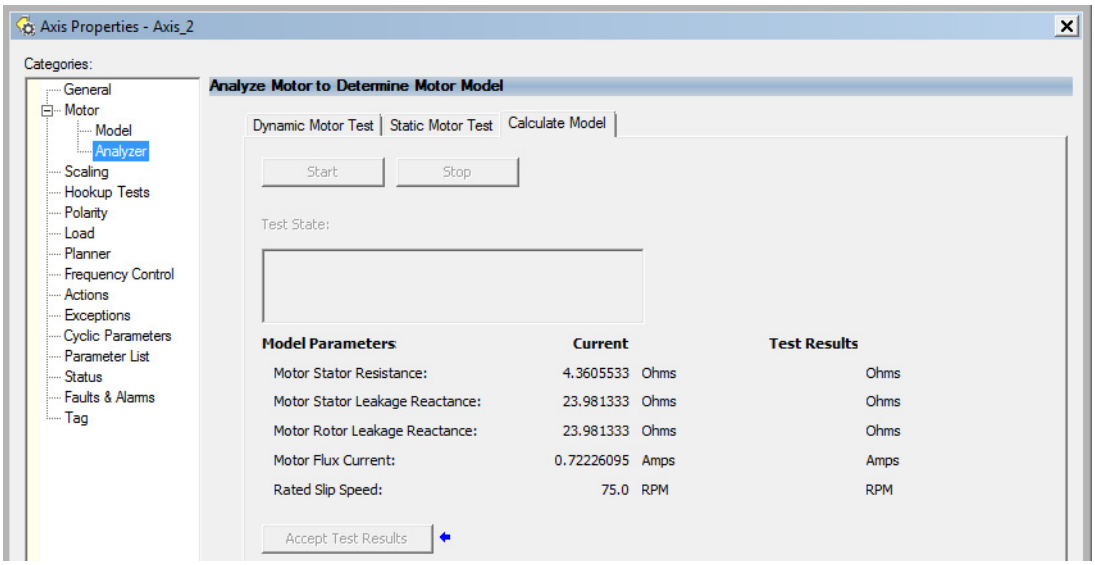

Motor Tests and Autotune Procedure

You can perform three types of tests to identify motor parameters and one test for motor/system inertia. These parameters are used by sensorless-vector frequency-control and induction motor closed-loop modes. Table 202 recommends which test to use based on the control mode and application.

Table 202 - Motor Tests and Autotune Matrix

Control Mode	Description	Calculate	Static	Dynamic	Autotune (inertia test)
Induction motor - Frequency control	Basic volts/hertz	Not required	Not required	Not required	Not required
	Basic volts/hertz for Fan/Pump	Not required	Not required	Not required	Not required
	Sensorless vector	Required (1)	Preferred	Not required	Not required
Induction motor - Closed-loop control		Required (1)	Preferred (2)	Preferred	Required (1) (3)

(1) Not required for the Logix Designer application, version 29.00 and later.
(2) If it is not desired to rotate the motor (due to coupled load) you can perform this test for induction motor closed-loop mode and skip the Dynamic test. The dynamic test provides the best results for induction motor closed-loop mode.
(3) The motor inertia value must be non-zero prior to running a dynamic test. The motor inertia value is estimated automatically based upon the Motor Nameplate data in the Logix Designer application, version 29.00 and later. For previous versions, an Autotune test must be run or the motor inertia value entered directly.

The Motor>Analyzer category offers three choices for calculating or measuring electrical motor data.

Follow these steps to run motor tests and identify motor parameters.

1. In the Controller Organizer, right-click an axis and choose Properties.
2. Select the Motor>Analyzer category.

   Nameplate data was entered on page 434. The nameplate data must be entered before running the Calculate test.

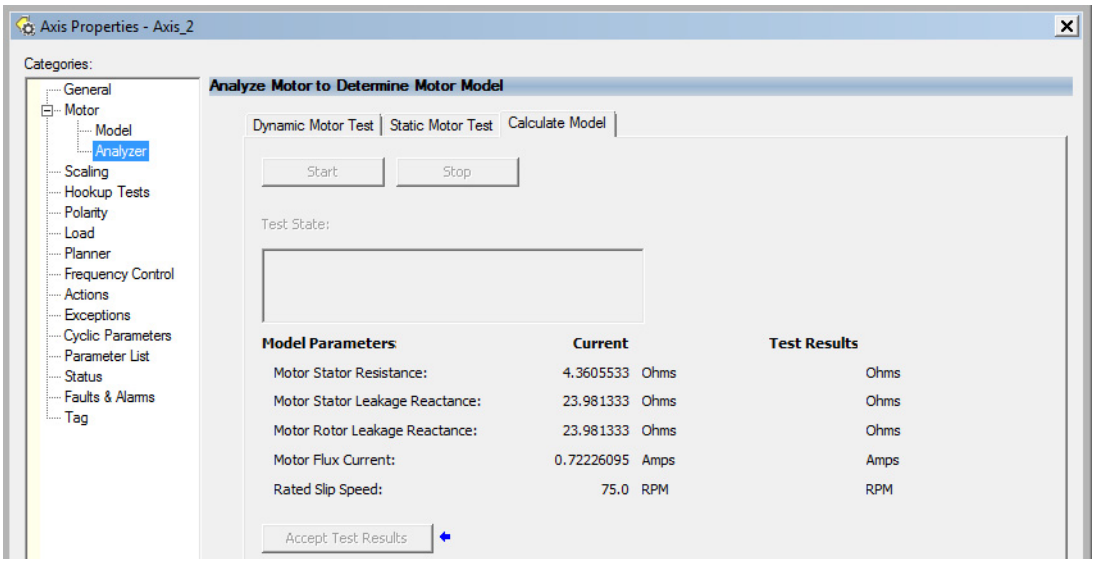

3. Click Start to run the test.
4. Click Accept Test Results to save the values.
5. Click OK.

Motor Analyzer Category Troubleshooting

Calculate Model

When a Calculate test is run, the drive uses motor nameplate data to estimate the motor's Rated Flux Current, Stator Resistance (Rs), Stator Leakage Reactance (X1) and Rotor Leakage Reactance (X2). The drive also calculates the rated slip speed based on rated speed and rated frequency. No measurements are taken when using the Calculate test.

Static Motor Test

Use the Static test if the motor shaft cannot rotate or if it is already coupled to the load. Only tests that do not create motor movement are run. During this test, the Stator Resistance (Rs), Stator Leakage Reactance (X1), and Rotor Leakage Reactance (X2) values are measured during a series of static tests. The Rated Flux Current is estimated, since measurement of this value requires

motor movement. The drive also calculates the rated slip speed based on rated speed and rated frequency.

The Static test requires that you enter initial estimates for Rated Flux Current, Rated Slip Speed, Stator Resistance (Rs), Stator Leakage Reactance (X1), and Rotor Leakage Reactance (X2) into the Motor Model fields.

- For the Logix Designer application, version 29.00 or later, initial estimates are populated by the controller.
- For the Logix Designer application, version 28.00 or earlier, this can be done by running and accepting the results of a Calculate test, or by entering the values directly into the Logix Designer application.

Dynamic Motor Test

Dynamic tests are run with the motor disconnected from the load because the motor shaft turns and there are no travel limits. This is often the most accurate test method. During this test, the Stator Resistance (Rs), Stator Leakage Reactance (X1) and Rotor Leakage Reactance (X2) values are measured in a series of static tests. The Rated Flux Current is measured during a rotational test, in which the drive commands 75% of the motor rated speed.

The rated slip speed is measured during a second rotational test, in which the drive commands a speed (default of 100% of the motor rated speed) and set a torque limit (default of 50% of the motor rated torque). This quickly accelerates the motor to rated speed and then decelerates back to zero speed.

IMPORTANT The Dynamic test does not support travel limits.

The Dynamic test also requires that you enter initial estimates for Rated Flux Current, Rated Slip Speed, Stator Resistance (Rs), Stator Leakage Reactance (X1), and Rotor Leakage Reactance (X2) into the Motor Model fields.

- For the Logix Designer application, version 29.00 or later, initial estimates are automatically populated by the controller.
- For the Logix Designer application, version 28.00 or earlier, this can be done by running and accepting the results of a Calculate test, or by entering the values directly into the Logix Designer application.

The Dynamic test uses the Ramp Acceleration and Ramp Deceleration attributes to set the rotational test ramp-up and ramp-down times. If the resulting acceleration/deceleration times are less than 10 seconds, 10 seconds is used. If these attributes are not supported, 10 seconds is also used.

The Dynamic test also uses the IM Slip Test Velocity Command (percent of rated speed) and IM Slip Test Torque Limit (percent of rated torque) attributes to define the motion profile for the slip measurement. The default values are 100.0 and 50.0 respectively. The speed command dictates the speed that the motor spins up to and the torque dictates how quickly the motor reaches that speed. In general, A higher speed and lower torque results in a longer acceleration and a more accurate rated slip speed.

However, be aware that the dynamic test will not return expected results if the torque limit is set below 30.0.

Table 203 - Slip Test via Messaging

Attribute Offset	Type	Attribute Name	Conditional Implementation	Description
3095	REAL	IM Slip Test Torque Limit	Closed loop induction motor only	Sets positive and negative torque limits for the slip test within the Dynamic motor test (similar to the torque limits in the inertia test). Units are in percent of rated torque.
3096	REAL	IM Slip Test Velocity Command		Sets the velocity command for the slip test within the Dynamic motor test, (similar to the velocity command in the inertia test). Units are in percent of motor rated speed.

The Dynamic test requires the Positive and Negative Torque Limits for said axis are not over-written while the test is in progress. This can be satisfied by making sure that (1) these cyclic attributes are not checked as writable within the Drive Parameters tab of the axis properties and (2) these parameters are not being messaged via an MSG instruction.

When configured for closed-loop control, the Dynamic test requires that an accurate system inertia is set in the Logix Designer application.

- For the Logix Designer application, version 29.00 or later, a default value is automatically populated by the controller.
- For the Logix Designer application, version 28.00 or earlier, this can be done by running and accepting the results of an Autotune test, or by entering the motor inertia value directly into the Logix Designer application.

When configured for closed-loop control, the Dynamic test uses the velocity regulator tuning as entered into the Logix Designer application. If the motor is coupled to a load, the velocity regulator tuning may need to be adjusted to make sure the velocity response is well controlled. The Dynamic test fails if the steady-state velocity feedback is not within a ±30% tolerance of the commanded velocity.

IMPORTANT The Dynamic test is not supported in closed-loop Torque Control.

If using the Dynamic test in Frequency Control mode, uncouple the motor from any load or results may not be valid. In closed-loop control, either a coupled or uncoupled load produces valid results.

Selection of Motor Thermal Models

The Kinetix 5700 drives contain two motor thermal-overload protection algorithms that you can use to prevent the motor from overheating.

Generic Motors

The default thermal model is a generic I^2T Class 10 overload protection algorithm. This model is active if the MotorWindingToAmbientResistance or the MotorWindingToAmbientCapacitance values are 0.0. The purpose of this algorithm is to limit the time a motor is operating with excessive levels of current. The relationship between Motor Overload Factory Limit trip-time and motor output current is shown in Figure 227.

Figure 227 - Motor Overload Curve

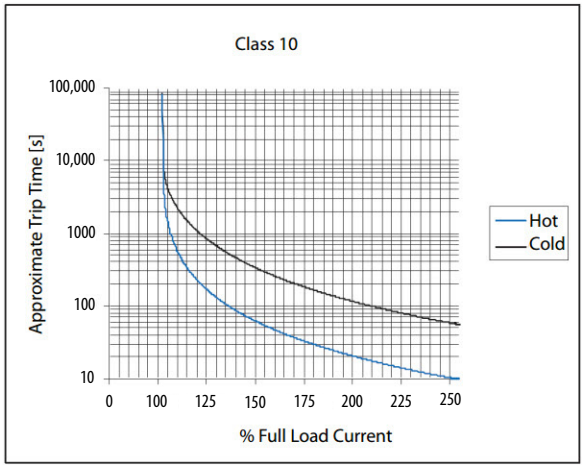

You can use the MotorOverloadLimit attribute (default of 100%, max of 200%) to increase the motor overload trip-time by artificially increasing the motor rated current (for thermal protection only). MotorOverloadLimit should only be increased above 100% if cooling options are applied. Increasing MotorOverloadLimit causes MotorCapacity to increase more slowly.

The generic motor thermal model also derates the motor rated current (for thermal protection only) when operating at low speeds. The derating factor is 30% at 0 Hz and 0% at 20 Hz, with linear interpolation between. Operating at output frequencies less than 20 Hz causes MotorCapacity to increase more quickly.

When the generic motor thermal-model is active, the MotorCapacity attribute increases only if the motor output current is greater than the effective motor rated current (taking into account the MotorOverloadLimit and low speed derating factor). The default MotorThermalOverloadFactoryLimit and MotorThermalOverloadUserLimit values for this thermal model are both 100%.

IMPORTANT The generic motor-thermal model does not support Current Foldback as a Motor Overload Action.

Thermally Characterized Motors

If the MotorWindingToAmbientResistance and MotorWindingToAmbientCapacitance attribute values are both non-zero, the motor is considered thermally characterized and an alternate motor thermal model is run. The purpose of this algorithm is to limit the time a motor is operating with excessive levels of current. This thermal model uses the first-order time constant determined from the MotorWindingToAmbientResistance and MotorWindingToAmbientCapacitance values to estimate the motor thermal capacity based on the motor output current.

The MotorOverloadLimit attribute (default of 100%, max of 200%) can be used to increase the motor overload trip-time by increasing the MotorThermalOverloadFactoryLimit value. The MotorOverloadLimit should be increased above 100% only if cooling options are applied. Increasing MotorOverloadLimit does not change the behavior of MotorCapacity.

This thermal model supports setting the MotorOverloadAction attribute as Current Foldback. Selecting the Current Foldback action results in a reduction in the current reference via the MotorThermalCurrentLimit attribute value that is reduced in proportion the percentage difference between the MotorCapacity and the MotorOverloadLimit values.

When this thermal model is active, the MotorCapacity attribute is non-zero if the motor output current is non-zero. The default MotorThermalOverloadFactoryLimit and MotorThermalOverloadUserLimit values for this thermal model are both 110%.

IMPORTANT This thermal model does not derate the motor-rated current when operating at low speeds. Operating at low output frequencies does not cause the MotorCapacity behavior to change.

Speed Limited Adjustable Torque (SLAT)

Speed limited adjustable torque (SLAT) is a special mode of operation used primarily in web handling applications. While configured for SLAT, the drive typically operates as a torque regulator. The drive can automatically enter velocity regulation based on conditions within the velocity regulator and the magnitude of the velocity regulator's output, relative to the applied TorqueTrim attribute.

A torque regulated application can be described as any process requiring tension control. For example, a winder or unwinder with material being drawn or pulled with a specific tension required. The process also requires that another element set the speed.

When operating as a torque regulator, the motor current is adjusted to achieve the desired torque. If the material being wound or unwound breaks, the load decreases dramatically and the motor can potentially go into a runaway condition.

The SLAT feature is used to support applications that require a robust transition from torque regulation to velocity regulation (and vice versa). The SLAT feature can be configured via the SLATConfiguration attribute as:

Table 204 - SLAT Configuration Descriptions

Name	Description
SLAT Disable	SLAT function is disabled. Normal Velocity Loop operation.
SLAT Min Speed/Torque	Drive automatically switches from Torque regulation to Velocity regulation if VelocityError < 0 and switches back to Torque regulation if VelocityError > SLATSetPoint for SLATTimeDelay.
SLAT Max Speed/Torque	Drive automatically switches from Torque regulation to Velocity regulation if VelocityError > 0 and switches back to Torque regulation if VelocityError < SLATSetPoint for SLATTimeDelay.

Direction of the applied torque and direction of the material movement determine whether SLAT minimum or SLAT maximum mode should be used.

Motion Polarity Setting

The Motion Polarity setting in the Logix Designer application>Axis Properties>Polarity does not affect SLAT behavior, however, you may require clarification on whether to use the SLAT Min Speed/Torque or SLAT Max Speed/Torque configuration when Motion Polarity is set to Inverted. In this case, the velocity error displayed in the Logix Designer application is inverted compared to what is actually used by the axis to control the SLAT function. So, if the SLAT configuration is set to Min and then Motion Polarity is switched to Inverted, change the SLAT configuration to Max.

Table 205 - SLAT Operation When Motion Polarity Is Inverted

Velocity Command	Motion Polarity	SLAT Configuration
Positive (clockwise)	Normal	Min
	Inverted	Max
Negative (CCW)	Normal	Min
	Inverted	Max

SLAT Min Speed/Torque

SLAT Min Speed/Torque is a special mode of operation primarily used in web handling applications. The drive typically operates as a torque regulator, provided that the TorqueTrim attribute is less than the torque output due to the velocity regulator's control effort. The drive can automatically enter velocity regulation based on conditions within the velocity regulator and the magnitude of the velocity regulator's output relative to the torque reference.

When used for SLAT control, an application dependent VelocityCommand value is applied to the drive via an MAJ instruction or MDS instruction (2198-*xxxx*-ERS4 and 2198-*xxxx*-ERS3 series B drives, firmware 9.001 or later). An application dependent TorqueTrim value is also applied via cyclic write. Under normal operation, VelocityCommand is set to a level that results in the velocity regulator's control effort becoming saturated when the motor's speed is mechanically limited. The TorqueReference value equals the TorqueTrim value, resulting in a positive VelocityError value.

Should the mechanical speed limitation be removed (example: web break), the motor accelerates and VelocityError becomes negative. At this time, a forced transition to velocity regulation occurs, and the motor's speed is regulated to the VelocityCommand attribute.

The axis remains in velocity regulation until VelocityError exceeds SLATSetPoint for a time specified by SLATTimeDelay. At this point, the axis returns to operating as a torque regulator.

Figure 228 - SLAT Min Speed/Torque

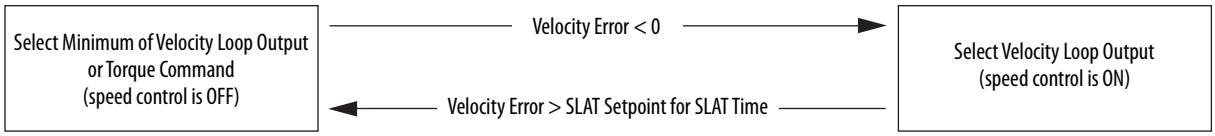

See the Integrated Motion on the EtherNet/IP™ Network Reference Manual, publication MOTION-RM003, for more information on SLAT attributes.

SLAT Max Speed/Torque

SLAT Max Speed/Torque is a special mode of operation primarily used in web handling applications. The drive typically operates as a torque regulator, provided that the TorqueTrim attribute is greater than the torque output due to the velocity regulator's control effort. The drive can automatically enter velocity regulation based on conditions within the velocity regulator and the magnitude of the velocity regulator's output relative to the torque reference.

When used for SLAT control, an application dependent VelocityCommand value is applied to the drive via an MAJ instruction or MDS instruction (2198-*xxxx*-ERS4 and 2198-*xxxx*-ERS3 series B drives, firmware 9.001 or later). An application dependent TorqueTrim value is also applied via cyclic write. Under normal operation, VelocityCommand is set to a level that results in the velocity regulator's control effort becoming saturated when the motor's speed is mechanically limited. The TorqueReference value equals the TorqueTrim value, resulting in a negative VelocityError value.

Should the mechanical speed limitation be removed (example: web break), the motor accelerates and VelocityError becomes positive. At this time, a forced transition to velocity regulation occurs, and the motor's speed is regulated to the VelocityCommand attribute.

The axis remains in velocity regulation until VelocityError is less than SLATSetPoint for a time specified by SLATTimeDelay. At this point, the axis returns to operating as a torque regulator.

Figure 229 - SLAT Max Speed/Torque

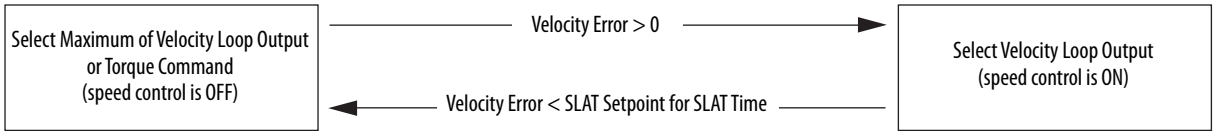

See the Integrated Motion on the EtherNet/IP Network Reference Manual, publication MOTION-RM003, for more information on SLAT attributes.

SLAT Attributes

ID	Access	Attribute	Conditional Implementation
833	Set	SLAT Configuration	0 = SLAT Disable [(1)] 1 = SLAT Min Speed/Torque 2 = SLAT Max Speed/Torque
834	Set	SLAT Set Point	Velocity Units
835	Set	SLAT Time Delay	Seconds

(1) SLAT Disable, when viewed in version 28.00 (and earlier) of the Logix Designer application, reads Torque Only.

Configure the Axis for SLAT

Follow these steps to configure the SLAT attributes.

1. In the Controller Organizer, right-click an axis and choose Properties.
2. Select the General category.

   The General dialog box appears.

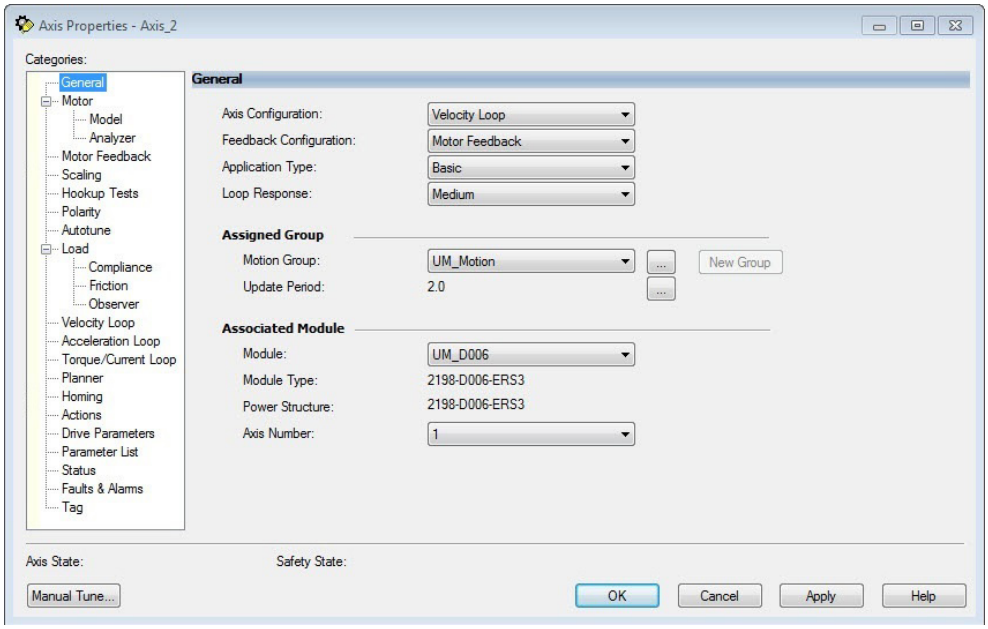

3. From the Axis Configuration pull-down menu, choose Velocity Loop.

   The Velocity Loop dialog box appears.

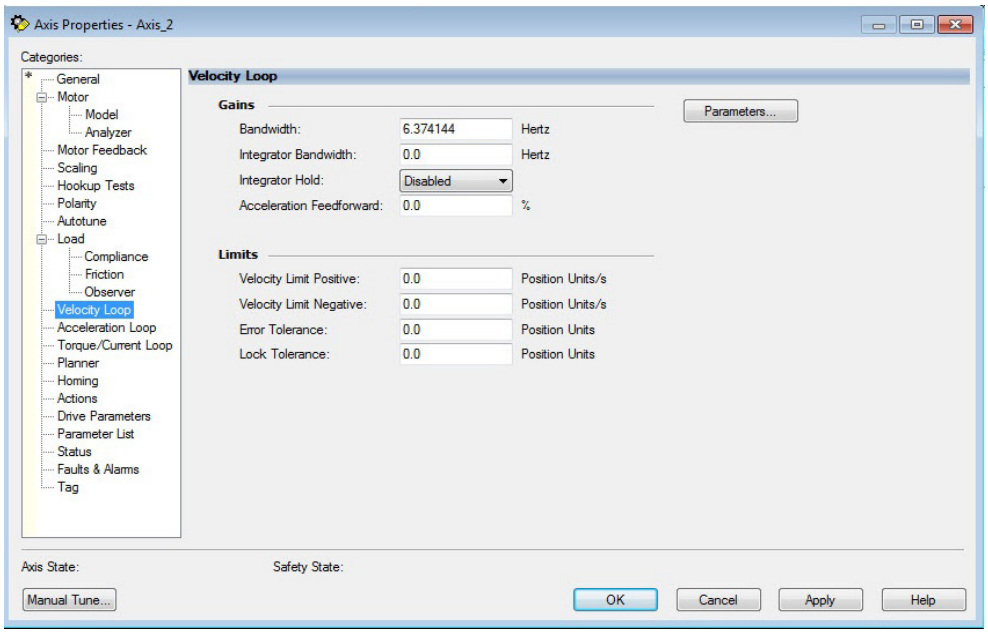

4. Enter values for the Velocity Loop attributes appropriate for your application.

5. Click Apply.
6. Select the Parameters List category.

   The Motion Axis Parameters dialog box appears.

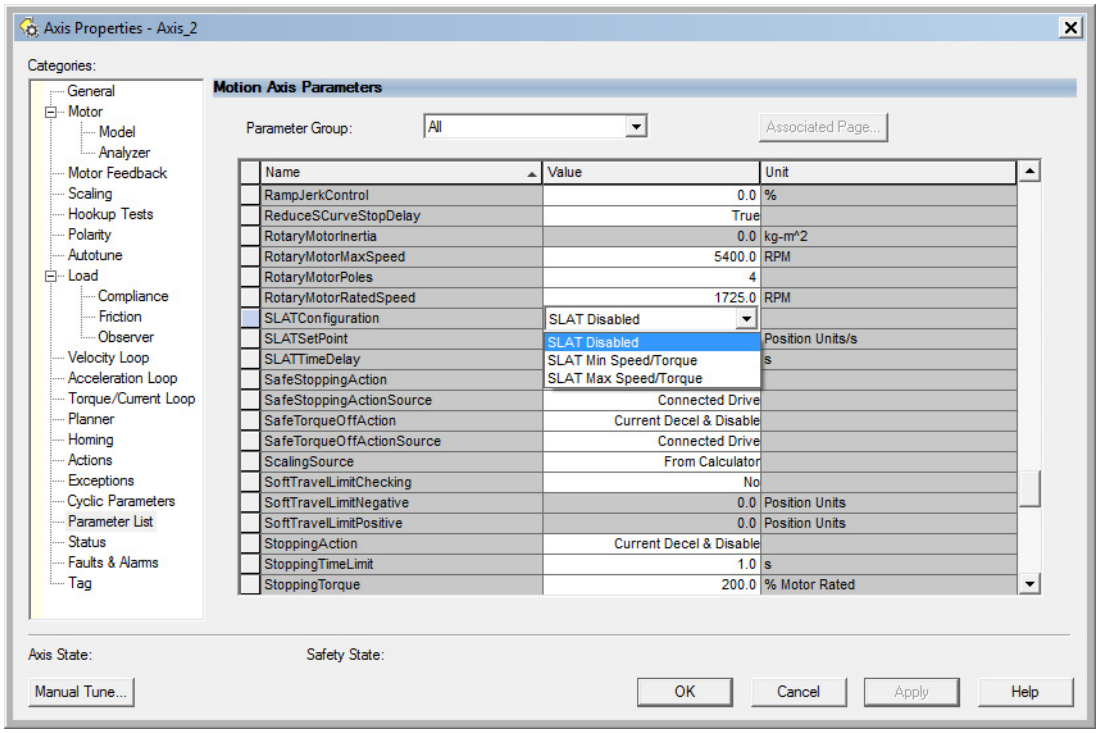

7. From the SLATConfiguration pull-down menu, choose the SLAT configuration appropriate for your application.

IMPORTANT SLAT parameters are configurable only when Velocity Loop is chosen from the General category, Axis Configuration pull-down menu.

8. Click Apply.
9. Enter values for SLATSetPoint and SLATTimeDelay attributes appropriate for your application.

SLATConfiguration	SLAT Max Speed/Torque	
SLATSetPoint	0.0	Position Units/s
SLATTimeDelay	0.0	s

10. Click OK.
11. Select the Drive Parameters category.

The Drive Parameters to Controller Mapping dialog box appears.

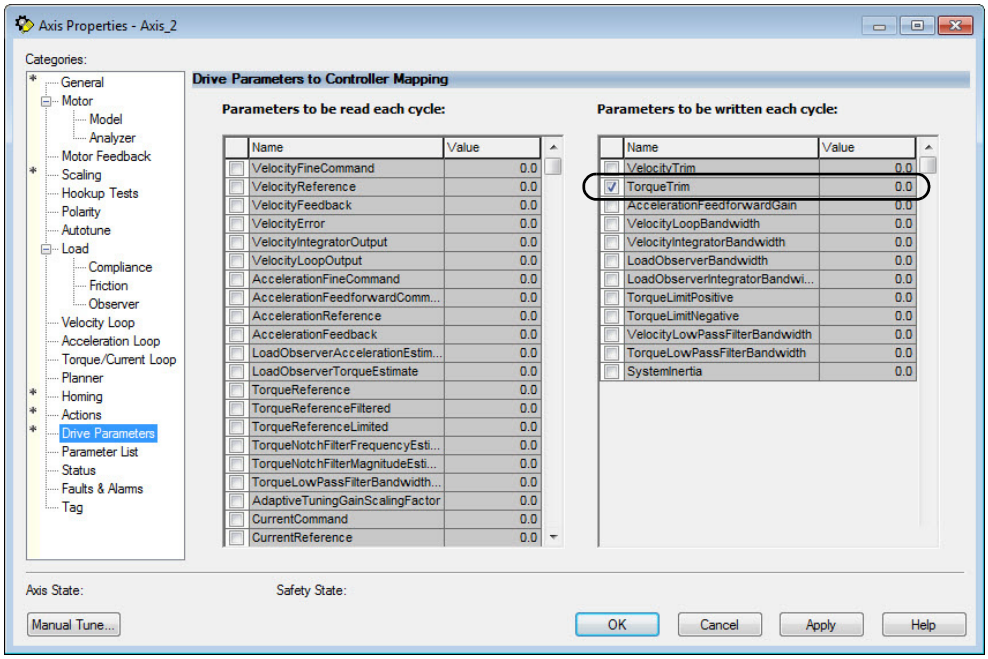

When using SLAT with Kinetix 5700 drives, the velocity command is sent to the drive via an MAJ instruction or MDS instruction (2198-*xxxx*-ERS4 and 2198-*xxxx*-ERS3 series B drives, firmware 9.001 or later). The torque command is sent via the cyclic write TorqueTrim attribute. See the Integrated Motion on the EtherNet/IP Network Reference Manual, publication MOTION-RM003, for more information on cyclic read and cyclic write.

For MAJ instructions:

- When using SLAT, start the axis with the MSO instruction.
- The VelocityCommand is sent via the MAJ instruction.
- The TorqueCommand is sent to AxisTag.TorqueTrim.
- To make changes to the VelocityCommand, you must re-trigger the MAJ with the Speed value or use a MCD (motion change dynamics) instruction.
- To stop the axis use a MAS instruction.
- The axis accelerates and decelerates at the MAJ instruction programmed Acceleration and Deceleration rates.
- You can also change the rates using the MCD instruction.

For MDS instruction (2198-*xxxx*-ERS4 and 2198-*xxxx*-ERS3 series B drives, firmware 9.001 or later):

- When using SLAT, start the axis with an MDS instruction.
- The MDS instruction turns on the power structure enable and tracking command status and also executes the velocity command.

  See sample code in Motion Drive Start (MDS) Instruction.
- The acceleration and deceleration rate is controlled by Ramped Acceleration and Ramped Deceleration by using the SSV instruction.
- The Torque Command is set to Axis Tag.Torque Trim. Make sure the Torque Trim Write is checked in the drive parameter (see Drive Parameters dialog box above). The value can be changed.
  - Alternatively, you can use the Axis Tag.DirectCommandVelocity to alter the Velocity Command when the existing MDS instruction is being executed.

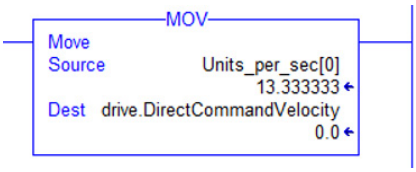

- To stop the axis, use MAS instructions, keeping the Change Decel to NO and by using an SSV instruction to change Ramped Deceleration for the desired rate.

Motion Drive Start (MDS) Instruction

Kinetix 5700 inverters, catalog numbers 2198-*xxxx*-ERS4 and 2198-*xxxx*-ERS3 (series B) with firmware revision 9.001 or later, provide access to the Motion Drive Start (MDS) instruction. Use the MDS instruction to activate the drive control loops for the specified axis and run the motor at the specified speed.

For information regarding the MDS instruction, refer to the Logix 5000™ Controllers Motion Instructions Reference Manual, publication MOTION-RM002.

For the Kinetix 5700 drive, the MDS instruction is valid only when the axis configuration is set to one of these control modes:

- Frequency Control
- Velocity Loop
- Torque Loop

IMPORTANT The MDS instruction is not valid when the axis configuration is set to Position Loop.

Motion Drive Start Instruction Configuration

The MDS instruction is configured in a similar fashion to most motion instructions, as seen in this example.

Figure 230 - Typical MDS Instruction

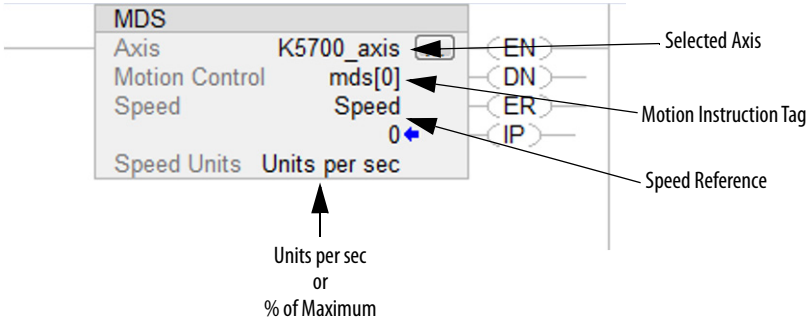

The MDS instruction is similar to a Motion Axis Jog (MAJ) instruction, however, the MDS instruction does not set the acceleration/deceleration rates. The acceleration rate is dynamically set by the ramp attributes configured in a Set System Value (SSV) instruction. See Ramp Attributes on page 451.

TIP The K5700_Axis was configured for revolutions. Therefore, the Speed Units are revolutions per second (rev/s).

Motion Drive Start (MDS) Sample Code

Figure 231 - Start

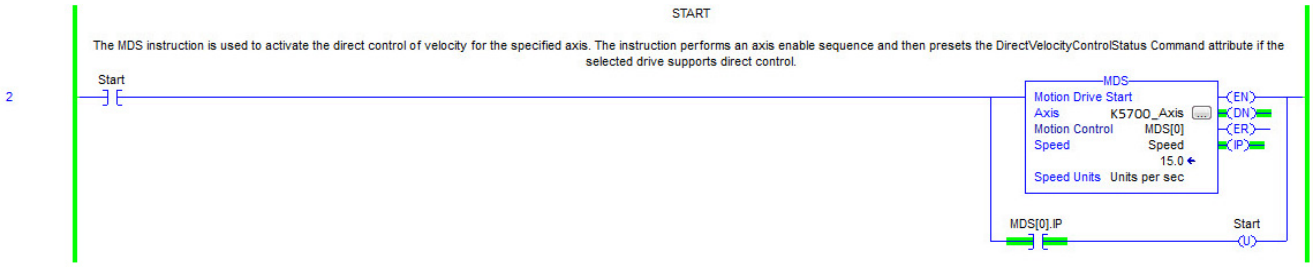

The speed is increased by updating the speed reference and then re-executing the MDS instruction.

Figure 232 - Increase Speed

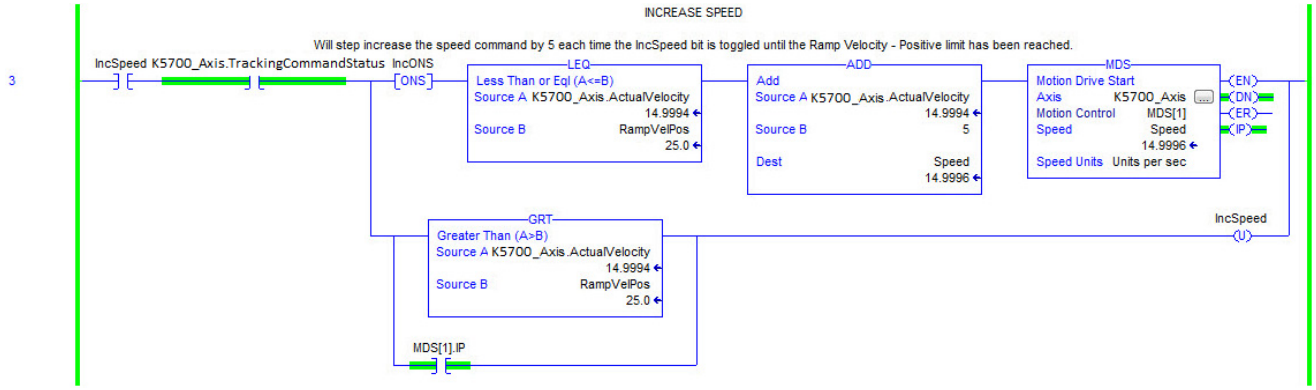

The speed is decreased by updating the speed reference and then re-executing the MDS instruction.

Figure 233 - Decrease Speed

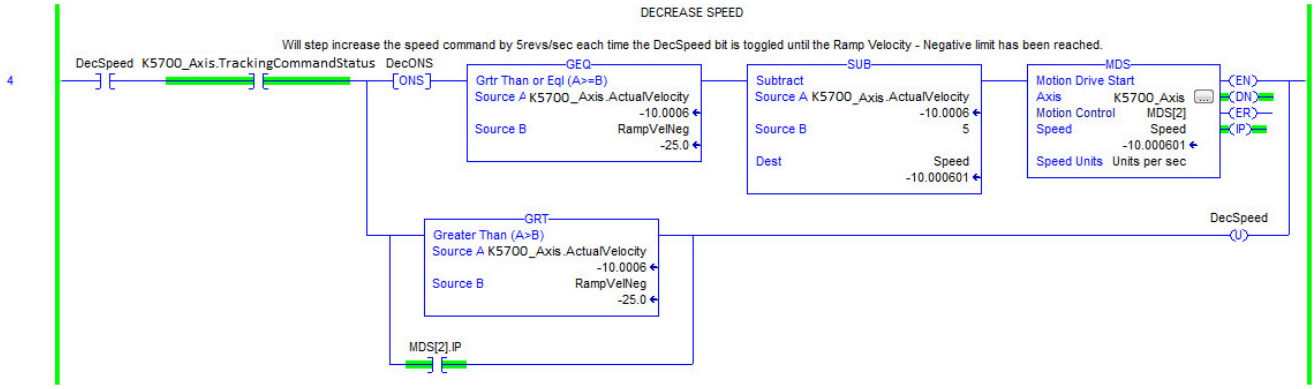

When the axis configuration is in Torque Loop, the Speed attribute within the MDS instruction is not used to command the speed of the drive. The speed is determined by the amount of torque specified in the CommandTorque and/or TorqueTrim attributes.

Figure 234 - Torque Mode

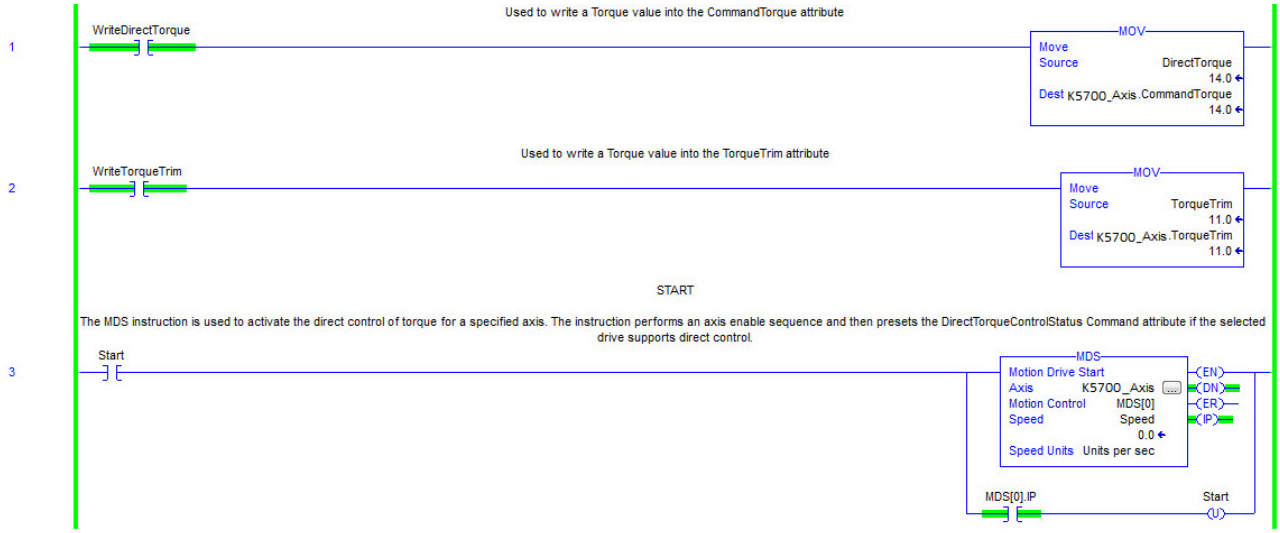

IMPORTANT You must command zero torque in the CommandTorque and TorqueTrim attributes before you can use the Motion Axis Stop (MAS) instruction to stop a specific motion process on an axis or to stop the axis completely. To use the MAS instruction, you must set Change Decel to No. Otherwise, an instruction error can occur. The deceleration rate is set based on the Ramp Deceleration attribute. The Motion Servo Off (MSF) instruction is used to deactivate the drive output for the specified axis and to deactivate the axis' servo loop. If you execute an MSF instruction while the axis is moving, the axis coasts to an uncontrolled stop.

Ramp Attributes

The MDS instruction is validated if the Integrated Motion on EtherNet/IP drive device supports the following five ramp attributes:

- RampAcceleration
- RampDeceleration
- RampVelocity - Positive
- RampVelocity - Negative
- RampJerk - Control

IMPORTANT Ramp attributes are available only when the Kinetix 5700 drive axis configuration is set to Frequency Control or Velocity Loop. Ramp attributes are not available when the axis configuration is set to Torque Loop or Position Loop.

Table 206 - Ramp Attributes

Ramp Attribute	Access	ID	Description
RampVelocity - Positive	Set	374	Ramp Velocity - Positive attribute is a positive value that defines the maximum positive velocity command output of the Ramp Generator.
RampVelocity - Negative	Set	375	Ramp Velocity - Negative attribute is a negative value that defines the maximum negative velocity command output of the Ramp Generator.
RampAcceleration	Set	376	The Ramp Acceleration attribute is a positive value that defines the maximum acceleration (increasing speed) of the velocity command output by the Ramp Generator.
RampDeceleration	Set	377	The Ramp Deceleration attribute is a positive value that defines the maximum deceleration (decreasing speed) of the velocity command output by the Ramp Generator.
RampJerk - Control	Set	379	The Ramp Jerk Control attribute sets the percentage of acceleration or deceleration time that is applied to the speed ramp as jerk limited S-Curve based on a step change in velocity. The S-Curve time is added half at the beginning and half at the end of the ramp. A value of 0 results in no S-Curve, for example, a linear acceleration or deceleration ramp. A value of 100% results in a triangular acceleration profile with the peak being the configured ramp acceleration or deceleration. As the Jerk Control value increases, the derived accelerating jerk value decreases based on the following: 0.5 • 0.01 • Jerk Control • Ramp Vel Positive/Ramp Accel. The decelerating Jerk limit value also decreases according to the following: 0.5 • 0.01 • Jerk Control • Ramp Vel Negative/Ramp Decel.

IMPORTANT The Ramp attributes can be viewed and set with only an SSV or GSV instruction.

Figure 235 - Ramp Attribute Sample Code

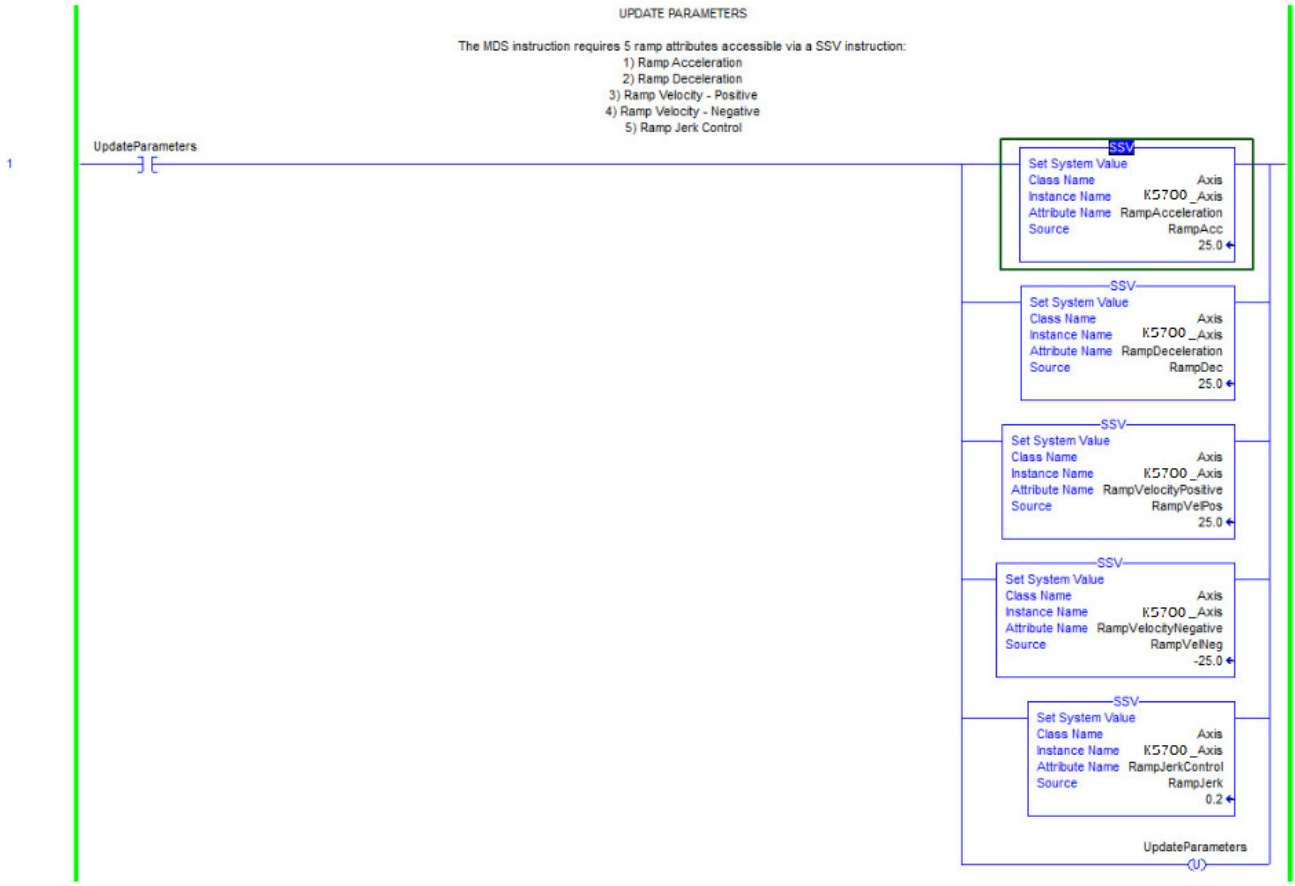

Motor Overload Retention

The motor overload retention feature protects the motor in the event of a drive power-cycle, in which the motor thermal state is lost.

With motor overload retention, upon drive power-up the MotorCapacity attribute initially reads:

- 20% if the motor is configured to use an integral thermal switch or an integral motor winding temperature is available
- 50% if the motor is not configured to use an integral thermal switch or an integral motor winding temperature is not available

If you have a separate monitoring algorithm within your Logix 5000 controller, you can use the InitialMotorCapacity attribute $(3075)_{10}$ or $(C03)_{16}$ to change the initial MotorCapacity value that the motor overload retention feature populates.

- You can write to the InitialMotorCapacity attribute only in the Stopped state after power-up
- You cannot write to the InitialMotorCapacity attribute after the first time the axis is enabled following a power cycle.

Use a message instruction to write to the InitialMotorCapacity value.

In this example, the source element tag motorcapacity is a REAL Data type.

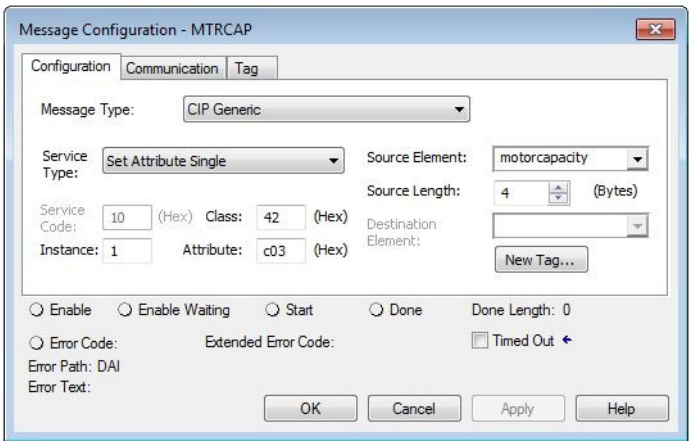

Phase Loss Detection

The phase-loss detection feature is designed to determine if motor power wiring is electrically connected to a motor and that reasonable current control exists. This attribute enables the operation of the drive's torque proving functions that work in conjunction with mechanical brake control.

When the ProvingConfiguration attribute is enabled, the drive performs a torque prove test of the motor current while in the Starting state to prove that current is properly flowing through each of the motor phases before releasing the brake. If the torque prove test fails, the motor brake stays engaged and a FLT-S09 Motor Phase Loss exception (fault) is generated.

IMPORTANT The mechanical brake must be set as soon as the drive is disabled. When the brake is under the control of the axis state machine, this is automatic. But, when controlled externally, failure to set the brake when the drive is disabled can cause a free-fall condition on a vertical application.

Table 207 - Phase-loss Detection Startup Sequence

Startup Phase	Description
Phase 1	When the drive receives an enable request, the Starting state begins execution and torque proving starts.
Phase 2	The torque proving feature ramps current to the motor-phase output connector and verifies that the current feedback circuitry detects current on each of the phases.
Phase 3	Once motor-current feedback has been verified in each motor phase, the drive attempts to enable the current control loop at a user-specified current level, and verifies that the current-loop error tolerance is within range.

Torque proving is available for all motoring configurations including closed-loop servo control and induction motors.

For permanent magnet (PM) motors, the drive attempts to apply current to the motor phases such that all current through the motor is flux current. However, due to the electrical angle of the motor at the time of the MSO instruction, it may not be possible to verify the motor phase wiring with only flux current. Therefore, with a PM motor it is possible that the motor shaft can move slightly during torque proving if no motor brake exists to hold the load.

Phase-loss Detection Attributes

ID	Access	Attribute	Conditional Implementation
590	SSV	ProvingConfiguration	0 = Disabled 1 = Enabled
591	SSV	TorqueProveCurrent	% Motor Rated Units: Amps Default: 0.000 Min/Max: 0/10,000

Phase-loss Detection Configuration

Follow these steps to configure the phase-loss detection attributes.

1. In the Controller Organizer, right-click an axis and choose Properties.
2. Select the Parameter List category and scroll to ProvingConfiguration.

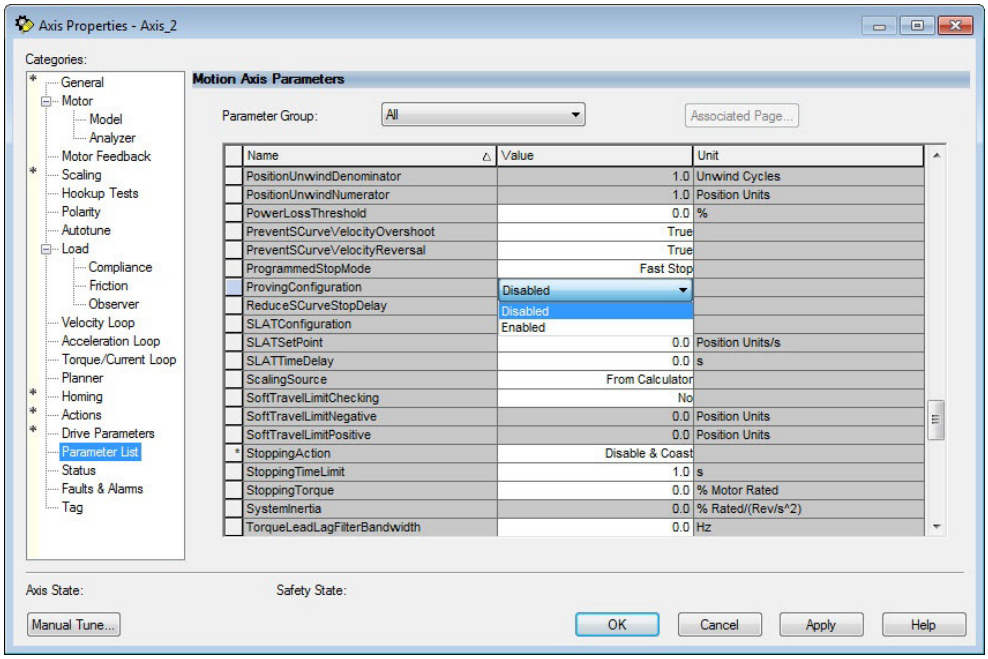

3. From the ProvingConfiguration pull-down menu, choose Enabled to enable the torque proving feature.

TorqueOffset	0.0	% Motor Rated
TorqueProveCurrent	0.0	% Motor Rated
TorqueRateLimit	1000000.0	% Motor Rated/s

4. Enter a value in the TorqueProveCurrent attribute appropriate for your application.
5. Click OK.

The TorqueProveCurrent attribute is active only if ProvingConfiguration is set to Enabled. TorqueProveCurrent lets you specify the amount of current that is used during the torque proving test and calculated as a percentage of motor rating. The higher the TorqueProveCurrent value the more current the drive delivers to the motor to verify that the motor phase wiring is available and capable of that current level. High current levels conversely cause more thermal stress and (potentially) can cause more torque to be driven against the motor brake during the test. If the TorqueProveCurrent level selected is too small, the drive cannot distinguish the proving current from noise, and in this case the drive posts an INHIBIT M04 torque-proving configuration fault code. The minimum amount of torque proving current depends on catalog number of the drive.

Phase Loss Detection Current Example

In this example, a 2198-D032-ERS3 dual-axis inverter is paired with a VPL-B1003T-C motor with 9.58 A rms rated current. Use the phase-loss detection equation and table to calculate the initial minimum torque-proving current as a percentage of motor rated current. Depending on the unique characteristics of your application, the required torque-proving current value can be larger than the initial recommended value.

Figure 236 - Phase-loss Detection Equation

$$\left(\frac{\textit{Rating From Table}}{\textit{Motor Rated Current}}\right) = \frac{0.9337\ \text{A}}{9.58\ \text{A}} = 9.75\%\ \text{motor rated current.}$$

Table 208 - Recommended Phase-loss Detection Current

Drive Cat. No.	Phase-loss Detection Current, min A, rms
2198-S086-ERS*x*	7.183
2198-S130-ERS*x*	9.337
2198-S160-ERS*x*	12.21
2198-S263-ERS*x*	21.492
2198-S312-ERS*x*	27.436
2198-D006-ERS*x*	0.1796
2198-D012-ERS*x*	0.3591
2198-D020-ERS*x*	0.5746
2198-D032-ERS*x*	0.9337
2198-D057-ERS*x*	1.6520

Velocity Droop

The velocity droop function can be useful when some level of compliance is required due to rigid mechanical coupling between two motors. The feature is supported when the axis is configured for Frequency Control, Velocity Control, or Position Control.

Closed Loop Control

The closed-loop velocity droop function is supported when configured for either Velocity or Position control. The velocity error input to the integral term is reduced by a fraction of the velocity regulator's output, as controlled by the VelocityDroop attribute. Therefore, as torque loading on the motor increases, actual motor speed is reduced in proportion to the droop gain. This is helpful when some level of compliance is required due to rigid mechanical coupling between two motors.

IMPORTANT The closed-loop velocity droop function acts to reduce the velocity error input to the integral term, but never changes the polarity of the velocity error.

IMPORTANT When configured for closed-loop control, the units of the VelocityDroop attribute are Velocity Control Units / Sec / % Rated Torque.

Frequency Control

The velocity droop function is also supported when configured for Frequency Control. As the estimated Iq current within the motor increases, the velocity reference is reduced in proportion to the VelocityDroop attribute. Therefore, as torque loading on the motor increases, actual motor speed is reduced in proportion to the droop gain. This is helpful when some level of compliance is required due to rigid mechanical coupling between two motors.

IMPORTANT The frequency-control velocity droop function acts to reduce the velocity reference, but never changes the direction of the velocity reference.

IMPORTANT When configured for frequency control, the units of the VelocityDroop attribute are Velocity Control Units / Sec / % Rated Iq Current.

Velocity Droop Attribute

ID	Access	Attribute	Conditional Implementation
464/321	SSV	Velocity Droop	Velocity Units / Sec / % Rated

Velocity Droop Configuration

Follow these steps to configure the velocity droop attribute.

1. In the Controller Organizer, right-click an axis and choose Properties.
2. Select the Parameter List category and scroll to VelocityDroop.

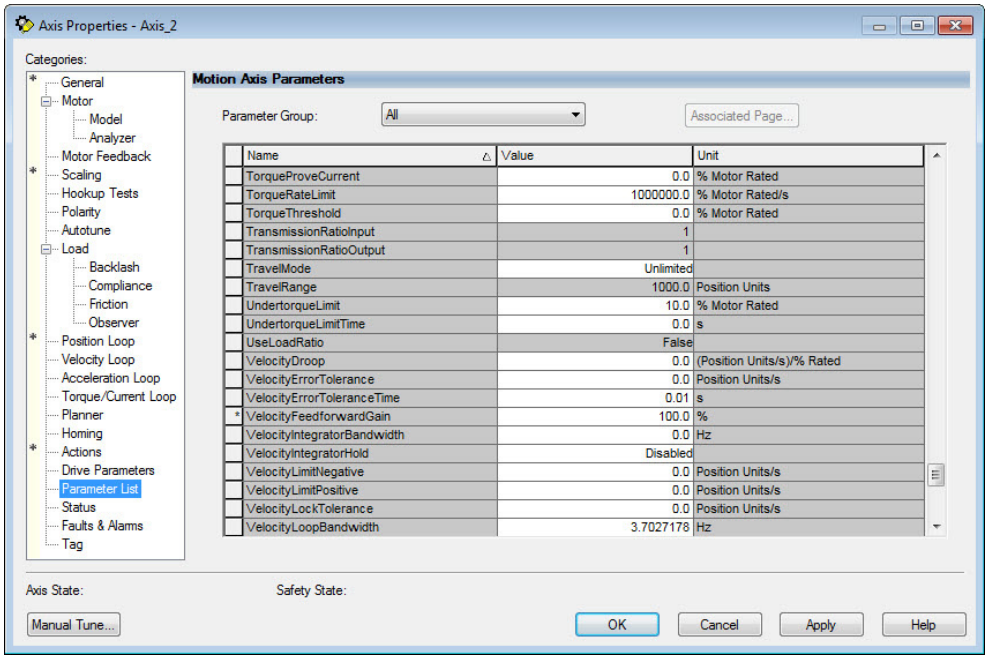

3. Enter a value in the Velocity Droop attribute appropriate for your application.
4. Click OK.

Commutation Self-sensing Startup

The commutation self-sensing feature is used to determine the initial electrical angle for permanent magnet (PM) motors with an incremental encoder that do not have Hall effect sensors. For PM motors that use encoders with Hall sensors, the drive can still be configured to use this feature, however, the Hall effect signals are ignored. When enabled, this feature is executed automatically at powerup and when the system is enabled.

IMPORTANT Following a connection loss to the controller after the initial power-up, the commutation self-sense feature is run again when connection is re-established and motion is commanded.

The self-sense feature takes approximately 5 seconds to execute. Five seconds is the default amount time assuming no retries are required. The axis stays in the Starting state while self-sense executes.

The sequencing of events is as follows.

1. One-second current ramp time
2. One second delay
3. One-second move time
4. One second delay
5. One-second current ramp time

IMPORTANT Self-sensing startup is not commutation diagnostics. You can perform commutation diagnostics on Hall effect or self-sensing motors at any time.

To use the self-sense feature, select the Motor Feedback category and from the Commutation Alignment pull-down menu, choose Self-Sense.

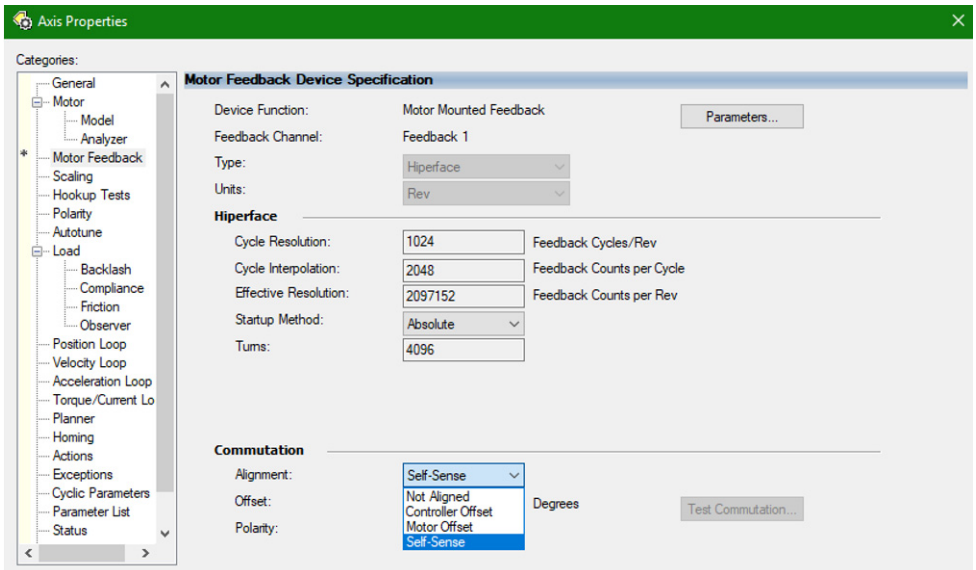

Table 209 - Self-sense Feature Attributes

CIP™ Attribute Number	CIP Attribute Name	Data Type	Description	Semantics of Values
562	Commutation Self-Sensing Current	REAL	The percent of the motors rated peak current to use for self-sensing startup. This value can be adjusted when the motor is moving a high inertia load.	% Motor Rated Peak Current [default = 100]
3102	Self-Sense Direction	USINT	• Forward – indicates the motor moves in only the positive direction during self-sensing startup. • Negative – indicates the motor moves in only the negative direction during self-sensing startup.	0 = Forward - CW (rotary) or Positive (linear) [default] 1 = Reverse - CCW (rotary) or Negative (linear)
3103	Self-Sense Lock Time	REAL	The amount of time the drive uses to build up current to the Self-Sensing Current level specified above.	Seconds [default = 1.0]
3104	Self-Sense Lock Delay	REAL	The amount of time the motor must be in the locked position after reaching the full Self-Sensing Current.	Seconds [default = 1.0]
3105	Self-Sense Move Time	REAL	The amount of time the drive uses for the verification move during self-sensing startup. Applies only to motors with self-sensing startup.	Seconds [default = 1.0]
3106	Self-Sense Move Delay	REAL	The amount of time the drive holds the final position after the verification move during self-sensing startup.	Seconds [default = 1.0]

Commutation Test

The commutation test determines an unknown commutation offset and can also be used to determine the unknown polarity of the start-up commutation wiring. You can also use the commutation test to verify a known commutation offset and the polarity start-up commutation wiring.

IMPORTANT This test applies to third-party or custom permanent-magnet motors equipped with (TTL with Hall and Sine/Cosine with Hall) incremental encoders that are not available as a catalog number in the Motion Database.

IMPORTANT When motors have an unknown commutation offset and are not listed in the Motion Database by catalog number, you cannot enable the axis.

Figure 237 - Hookup Tests - Commutation Tab

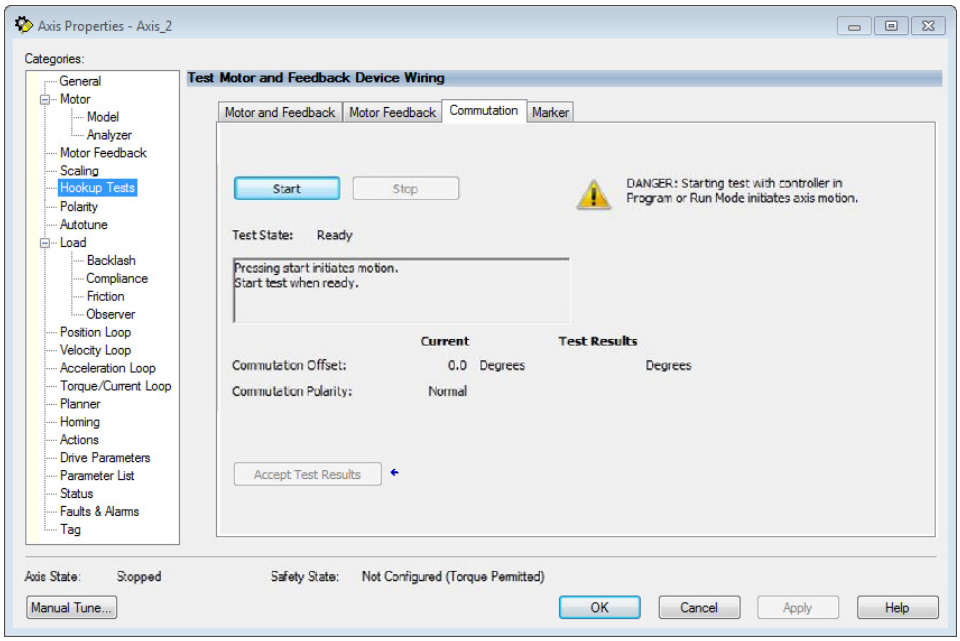

To run the commutation test, see Test the Axes on page 269.

Adaptive Tuning

The adaptive tuning feature is an algorithm inside the Kinetix 5700 servo drives. The algorithm continuously monitors and, if necessary, adjusts or adapts various filter parameters and, in some cases, control-loop gains to compensate for unknown and changing load conditions while the drive is running. Its primary function is to:

- Automatically adjust torque-loop notch and low-pass filter parameters to suppress resonances
- Automatically adjust control-loop gains to avoid instability when detected

See Motion System Tuning Application Techniques, publication MOTION-AT005, for more information on the AdaptiveTuningConfiguration attribute.

Virtual Torque Sensor

The virtual torque sensor feature provides an estimate of the motor torque without having a physical torque sensor. The virtual torque sensor can be leveraged to improve the commissioning and maintenance experience with mechanical systems and to optimize production quality. Some examples of how the feature can be applied include the following:

- Indication of shaft misalignment during commissioning
- Verification of appropriate mechanical belt tensioning during maintenance
- Detection of a material jam during operation

The feature provides an estimate of the motor air-gap torque under dynamic and steady state operating conditions. The air-gap torque is the torque that includes the load torque, motor torque losses, and rotor acceleration torque. The estimated torque does not affect motion control or drive performance.

The virtual torque sensor is available with the following hardware and software:

- Studio 5000 Logix Designer® version 33 and later
- Kinetix 5700 servo drives (catalog numbers 2198-*xxxx*-ERS3 Series B and 2198-*xxxx*-ERS4 Series A) with drive firmware revision 13 and later

For more information on how to apply the virtual torque sensor feature, see Virtual Torque Sensor Application Technique, publication 2198-AT003.

Field Weakening Mode

Kinetix VPC interior permanent-magnet (IPM) motors are designed to operate in Field Weakening mode to widen the speed range. Operation in Field Weakening mode can result in Back EMF voltage increasing to a level that exceeds the DC-bus voltage if a loss of control occurs. When this loss of control occurs, the Back EMF voltage can charge the DC-bus to a level that can overvoltage the DC-bus caps and result in a failure of the common DC-bus.

Figure 238 - Field Weakening Region

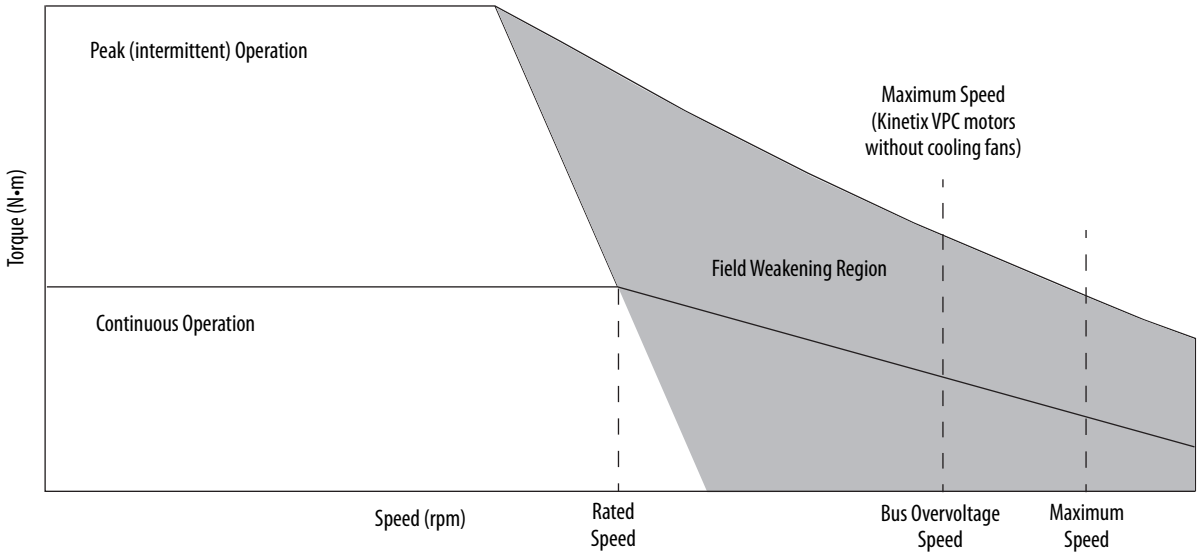

ATTENTION: DC-bus failure can cause damage to all drive modules in the bus group, not just the inverter connected to the Kinetix VPC motor.

Extended Speed Feature

The Extended Speed feature is implemented in the Logix Designer application to help prevent accidental operation at unsafe speeds. With this feature, the controller calculates a Bus Overvoltage Speed based upon the drive's maximum allowable bus-voltage and the Back EMF of the motor. This is the maximum speed that does not risk damaging the drive modules in the bus group. By default, the Extended Speed feature limits motor velocity to the Bus Overvoltage Speed.

Configure Extended Speed Operation

The extended speed feature is only configurable with Kinetix 5700 drives and Kinetix VPC continuous-duty IPM motors. You can configure the Extended Speed feature in Axis Properties>Motor category of the Logix Designer application (version 29.00 or later).

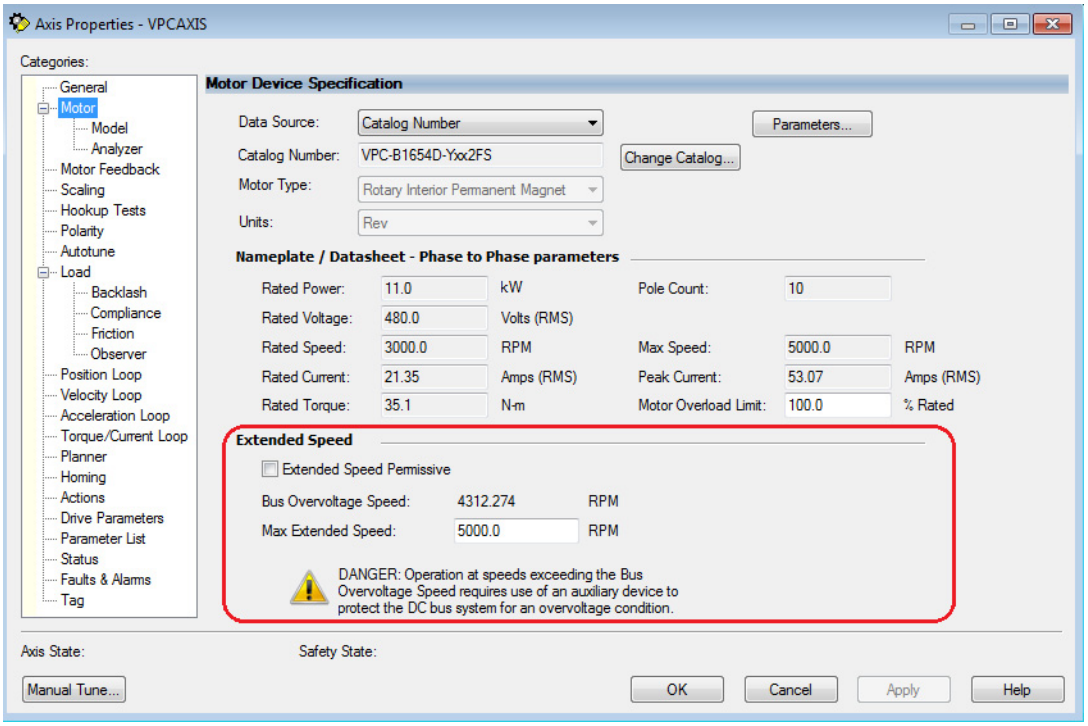

Follow these steps to enable operating at speeds greater than the Bus Overvoltage Speed.

1. In the Extended Speed field, check Extended Speed Permissive.
2. Set the Max Extended Speed attribute as required by your application.

WARNING: Operation at speeds exceeding the Bus Overvoltage Speed requires use of an auxiliary device to protect the DC bus system from an overvoltage condition.

Notes:

History of Changes

This appendix contains the new or updated information for each revision of this publication. These lists include substantive updates only and are not intended to reflect all changes. Translated versions are not always available for each revision.

2198-UM002J-EN-P, June 2020

Change
Corrected the number of motor modules supported by two iTRAK® power supplies.
Added additional settings for drive firmware revision 12.001 to Navigating the iTRAK Power Supply Settings Menu.
Added Configure the iTRAK Power Supply.
Added IMPORTANT message to Apply Power to the Kinetix® 5700 Drive System regarding configurations with multiple iTRAK power supplies.
Added additional fault codes for drive firmware revision 12.001 to iTRAK Power Supply Behavior.
Updated drive behavior of FLT S33 - BUS UNDERVOLT FL.
Corrected system operation timing diagrams.
Corrected the encoder voltage used by VPC-B*xxxx*-Y servo motors.
Added IMPORTANT messages regarding iTRAK power supplies configured for normal and standalone operation.
Added cable length restrictions for Third-party Motor Configurations.
Added callout to Field Weakening Region diagram identifying Bus Overvoltage Speed as the maximum speed for Kinetix VPC motors without cooling fans.

2198-UM002I-EN-P, November 2019

Change
Added references to Knowledgebase Answer ID: 1091727, for fault codes and descriptions.
Added Kinetix 5700 drive compatibility with 2090-CS*x*M1*xx*-*xx*VA*xx* (PVC) and 2090-CSBM1xx-*xx*LF*xx* (Halogen-free PUR) single motor-cables.
Added Kinetix 5700 drive compatibility with VPC-B3004*x*-M servo motors with multi-turn encoder.

2198-UM002H-EN-P, May 2019

Change
Studio 5000 Logix Designer® application is the rebranding of RSLogix 5000® software. General references to RSLogix 5000 software have been replaced by the Logix Designer application. References to specific RSLogix 5000 software versions did not change.
Updated references to safe-off (SO) as safe torque-off (STO), per EN61800-5-2.
Updated references to series A and B drives. The 230V drive modules previously labeled as series A are now series A and C. The 460V drives previously labeled as series B are now series B and C.
Added Kinetix 5700 drive compatibility with Kinetix VP (Bulletin VPH) hygienic stainless-steel servo motors.

2198-UM002H-EN-P, May 2019 (continued)

Change
Added information about the CIP Security™ feature.
Updated Drive to Motor Cable Lengths specifications to distinguish maximum cable length depending on DC-bus power supply (catalog number 2198-P*xxx*).
Added specification that applies to Kinetix 5700 drives that use the CIP Security feature.
Updated ground screw setting for iTRAK power supply.
Added the power conductor AWG to the description for 2198-S*xxx*-ERS*x* single-axis inverters.
Updated Navigating the Inverter Settings Menu selections. Added settings for the Factory Reset menu selection.
Updated the AOP Installation Requirement table with drive firmware, version 11.001 (CIP Security feature).
Added Regenerative Bus Supply Sequence Operation appendix.

2198-UM002G-EN-P, February 2019

Change
Added the following drive module catalog numbers, specifications, features, pinouts, mounting, wiring, configuration in the Logix Designer application, and troubleshooting information: • 2198-RP*xxx* regenerative bus supplies • 2198-S263-ERS*x* and 2198-S312-ERS*x* single-axis inverters • 2198-DCBUSCOND-RP312 DC-bus conditioner module
Added Kinetix VP (Bulletin VPAR) electric cylinders as another compatible linear actuator with Kinetix 5700 servo drives.
Updated the maximum current rating (40 A) for the 24V input power shared-bus connection system.
Moved fault code tables (FLT S*xx*, FLT M*xx*, and INIT FLT for example), previously in Troubleshoot the Kinetix 5700 Drive System (chapter 7), to the attached spreadsheet.
Added 2198-DBR*xx*-F AC line filters.
Added the 2198-BARCON-220DC200 DC-bus link to support the 2198-S263-ERS*x* and 2198-S312-ERS*x* single-axis inverters.
Added the following DC-bus links to support the 2198-RP*xxx* regenerative bus supplies: • 2198-BARCON-165DC200 • 2198-BARCON-275DC200 • 2198-BARCON-440DC200
Added the 842E-CM integrated motion encoder to the star communication topology diagram.
Added DC-bus Voltage Regulation that explains how the regenerative bus supply can be configured to operate as a DC-bus power supply.
Added AC Line Filter Selection that matches line filter catalog numbers to Kinetix 5700 power supplies.
Added AC Line Impedance Considerations that provides guidelines for transformer and line reactor selection.
Added 24V Control Power Evaluation that provides guidelines to minimize 24V control power voltage drop.
Added Passive Shunt Considerations and Active Shunt Considerations that provide guidelines for shunt module selection.
Added Multi-axis Shared DC-bus Configurations that provides guidelines for system sizing.
• Added Accessory Module Selection with DC-bus power supply configurations that moved from Chapter 3. • Added regenerative bus supply system configurations illustrating the minimum number of accessory modules required.
Updated the 8720MC-RPS or Other Regenerative Power Supply example configurations with a DC-bus conditioner module.
Added accessory module flowcharts designed to help determine the minimum number of accessory modules required.
Added the 2198-S312-P-T control power T-connector and bus bar to support 2198-S263-ERS*x* and 2198-S312-ERS*x* single-axis inverters.

2198-UM002G-EN-P, February 2019 (continued)

Change
Added Converter OK Relay that explains how the circuitry is used to support applications that migrate from 8720MC-RPS units to the 2198-RP*xxx* regenerative bus supply.
Added footnotes (1) and (2) to DC-bus Power Supply Wiring Requirements table that further specify wire size to meet CE requirements for 2198-P070 DC-bus power supplies.
Updated Maximum Cable Lengths with examples for 2198-RP*xxx* regenerative bus supplies.
Added Customer-supplied Motor Power Cables to support wiring 2198-S263-ERS*x* and 2198-S312-ERS*x* single-axis inverter applications that require conductors larger than 2 AWG.
Updated External Active-shunt Connections with Powerohm catalog numbers that apply to regenerative bus supplies and added information for wiring regenerative bus supplies to the Active Shunt (RC) connector.
Added Hardware Fault Tolerance (HFT) specifications to the table.
Added Active Shunt Wiring Examples.
Added external-bus capacitance calculations and updated the System Sizing Example with the external-bus capacitance value.
Added the Maximum Motor Cable Lengths for Kinetix 5700 Power Supplies (Appendix D).
Updated Motor Analyzer Category Troubleshooting with rated slip-speed information.

2198-UM002F-EN-P, May 2018

Change
Added features that apply to 2198-*xxxx*-ERS3 (series B) drives. • In many instances, 2198-*xxxx*-ERS3 (series B) drives share features of 2198-*xxxx*-ERS4 drives and this was added to the text • In many instances, it was necessary to distinguish 2198-*xxxx*-ERS3 (series A) drive operation from series B and this was added to the text • Updated single-axis and dual-axis inverter line drawings with locking-leaver I/O (IOD) and safety (STO) connectors that are included with 2198-*xxxx*-ERS3 (series B) and 2198-*xxxx*-ERS4 drives
Added Kinetix 5700 Servo Drives Series Change to describe new features that are available with 2198-*xxxx*-ERS3 (series B) drives.
Updated AC Line Filters installation guidelines.
Corrected the DC-bus power supply IOD-4 description and signal name.
Added information for IEC 61800-3 category C3/C4 compliance with regard to the use of AC line filters on AC input power.
Added bullet statements and other text to describe features of 2198-*xxxx*-ERS3 (series B) drives, including when to use Compatible Module and Exact Match electronic keying options in the Module Definition.
Updated Safety Application Definitions table with safety functions specific to 2198-*xxxx*-ERS3 (series A) drives and 2198-*xxxx*-ERS3 (series B) drives.
Updated content regarding fault code NODE FLT 06 fault behavior.
Added Replacing 2198-*xxxx*-ERS3 (series A) Drives with Series B Drives with text, dialog boxes, and a flowchart to describe when to use Compatible Module and Exact Match electronic keying options in the Module Definition.
Added STO tag name changes to help describe changes in the safe torque-off tag names.
Updated single-axis inverter and dual-axis inverter integrated STO specifications to reflect safe torque-off tag name changes.
Added ladder logic examples to show how STO function tag name changes can appear in your application program.
Added information about changes in drive firmware revision 9.001 and later (2198-*xxxx*-ERS4 and 2198-*xxxx*-ERS3 series B drives) that provides for the use of MDS instructions with Speed Limited Adjustable Torque (SLAT) operation.

Notes:

Numerics

1321 line reactors 13, 18, 45
2090-CFBM7DF-CD 18
2090-CFBM7DF-CE 18
2090-CPBM7DF 18, 158
2090-CPWM7DF 158
2090-CSBM1DE 18, 28, 154
2090-CSBM1DG 18, 28, 154
2090-XXNFMF 18
2198-BARCON-55DC200 17
2198-CAPMOD-2240 36, 57
2198-CAPMOD-DCBUS-IO 36, 57
2198-DBR*xx*-F 18, 38
2198-DB*xx*-F 18, 38
2198-DCBUSCOND-RP312 36, 57
2198-H2DCK 17, 28, 112, 167, 172
  pinout 168
2198-K57CK-D15M 17, 28, 112, 167, 172
  pinout 168
2198-KITCON-DSL 17, 28, 155
2198-KITCON-ENDCAP200 17
2198T-CHBFLS8 18, 22
24V input power connector
  evaluation 47
  pinouts 100
  wiring 140
842E-CM 116
842HR 116
843ES 117
844D 116
847H 116
847T 116
8720MC-RPS 17
  interconnect diagram 356
  minimum accessory modules 62
8720MC-RPS065
  interconnect diagram 352
8720MC-RPS190
  interconnect diagram 354

A

about this publication 11
absolute position feature 119
AC line filters
  2198-DBR*xx*-F 18, 38
  2198-DB*xx*-F 18, 38
  noise reduction 71
accessory modules 57, 81
  capacitor 17, 57
  catalog number 36
  connector locations 98, 176
  DC-bus conditioner 17, 57
  extension 17, 57
  minimum accessory modules flowchart 63
  minimum modules required 57, 59, 62
actions category 245, 249, 254
active shunt
  interconnect diagram 360
  pinouts 101
  use cases 50
  wiring 178
actuators
  compatible actuators 167
adaptive tuning 460
additional resources 13
alarm 281
AOP
  drive module
    firmware 195
  PCDC download 195
application requirements 323
applying power 264
associated axes 202, 206, 210, 216, 221
  category 220, 258
audience for this manual 11
automatic 417
auxiliary feedback encoders 116
axis properties 231, 233, 242, 246, 251, 260
axis unstable 278

B

back EMF 462
basic volts/hertz 235, 421
BC connector
  pinouts 103
  wiring 158
behavior
  DC-bus power supply 282, 284
  drive module 287
  iTRAK power supply 286
Beldon 159
block diagrams
  capacitor module 378
  DC-bus conditioner module 379
  DC-bus power supply 373
  dual-axis inverter 376
  iTRAK power supply 377
  regenerative bus supply 374
  single-axis inverter 375
bonding
  EMI (electromagnetic interference) 65
  examples 66
  high frequency 40
  high frequency energy 67
  subpanels 67
brake relay specifications 109
Bulletin
  MPAI electric cylinders 28
  MPAR electric cylinders 28
  MPAS linear stages 28
Bus Observer 228
bus overvoltage speed 462

bus-sharing
configuration 201, 205, 209, 218
group 201, 205, 209, 218
group example 266
groups 265
regulator 201, 209
BusVoltageReferenceSource 228
BusVoltageSetPoint 225

C

cables
Bulletin 2090 18
cable lengths, max 150, 153, 405
cable preparation
customer-supplied motor power 173
dual-axis power cable 160
motor feedback 169
single-axis power cable 163
catalog numbers 154, 158
categories 70
Ethernet cable length 181
induction motors 159
shield clamp 156, 170
calculate model 437
capacitor module 17, 57, 378
interconnect diagram 345
status indicator 277
wiring requirements 176
catalog numbers
accessory modules 36
DC-bus power supply 36
inverters 36
iTRAK power supply 36
motor cables 154, 158
regenerative bus supply 36
shared-bus connection system 37
category 3
stop category definitions 304
CE compliance 37
CED connector
pinouts 100
wiring 143
certification
application requirements 323
PL and SIL 304
TÜV Rheinland 304
user responsibilities 304
website 304
CIP axis states 413
CIP Security 12
circuit breaker selection 46
clamp 156, 170
spacers 161
clearance requirements 54
cluster 395
commutation offset 270, 460
commutation self-sensing 458
CompactLogix
Ethernet connections 181
compatibility
motor feedback 259
motors and actuators 167
configuration
24V DC voltage drop 401
8720MC-RPS 27
DC-bus power supply 19
extended DC-bus 21
extended regenerative bus supply 26
feedback examples 28
input power to multiple drive systems 25
iTRAK power supply 22
multiple DC-bus power supply 20
regenerative bus supply 23, 24
configuring
actions category 245, 249, 254
axis properties 260
Bus Observer 228
BusVoltageReferenceSource 228
BusVoltageSetPoint 225
converter startup method 225
general category 225
basic volts/hertz 235
CIP axis states 193, 413
controller 196
converter startup method 413
DC-bus power supply 199
download program 263
exceptions category 249, 255
fan/pump volts/hertz 240
feedback-only axis 222, 231
flux up 433
frequency control category 235, 237, 240
general category 231, 233, 242, 246, 251
home screen 184
hookup test 269
induction-motor closed-loop axis properties 251
induction-motor frequency-control axis 233
inverters 212
IP address 194
IPM motor closed-loop axis properties 242
iTRAK power supply 207
load category 244, 248, 256
master feedback 232
MDS instruction 449
menu screens 185, 186, 187, 188
module properties 200, 201, 202, 204, 205, 206, 208, 210, 211, 213, 217, 219, 220, 222, 223, 258
inhibit module 383
motion
group 224
safety 216
motor
analyzer category 239, 257
category 234, 243, 247, 252, 434, 463
feedback 259
feedback category 253, 260, 261, 262, 263
test 268
network parameters 194
parameter list category 236, 238, 241, 245, 250, 255
polarity category 252
power category

bus-sharing group example 266
bus-sharing groups 265
regenerative bus supply 203
safety
application 215
connection 216
scaling category 244, 248, 254
sensorless vector 237
setup
menu 189, 190, 191, 192
screens 188
SLAT 445
SPM motor closed-loop axis properties 246
startup sequence 193
torque proving 455
valid feedback types 260
velocity droop 458
Connected Drive mode 288
connecting
CompactLogix 181
connector kit shield clamp 170
ControlLogix 181
Ethernet cables 181
motor shield clamp 156
Connection mode 216
connector kit
2198-BARCON-55DC200 17
2198-H2DCK 167
2198-K57CK-D15M 17, 167
2198-KITCON-DSL 17, 155
2198-KITCON-ENDCAP200 17
24V
drive system 17
iTRAK PS system 17
cable preparation
motor feedback 169
connector locations 95, 96
accessory modules 98, 176
DC-Bus power supply 92
dual-axis inverters 94
iTRAK power supply 97
regenerative bus supply 93
single-axis inverters 95, 96
contactor enable
connector pinouts 100
relay 108
contactor selection 48
control power
input specifications 111
pinouts 100
wiring 140
ControlFLASH
firmware upgrade 381
troubleshooting 392
ControlFLASH Plus
firmware upgrade 381, 384, 387
troubleshooting 381
controller
and drive behavior 281
CompactLogix 196
configure 196
ControlLogix 196
properties
date/time tab 198
enable time synchronization 198
controller-based
monitoring functions 16
stopping functions 16
ControlLogix
Ethernet connections 181
conventions used in this manual 12
converter kit
2198-H2DCK 17, 167
converter OK
relay 109
converter startup method 225, 413
automatic 417
enable request 414
corner-grounded power configuration 124, 128
CP connector
pinouts 100
wiring 140
current limiting 424
current regulator loop 434
customer supplied cable 173

D

date/time tab 198
DC bus connector
pinouts 101
DC-bus conditioner module 17, 57, 379
interconnect diagram 349
DC-bus group 395
DC-bus power supply 16, 136, 373
behavior 282, 284
catalog numbers 36
configuring 199
connector locations 92
ground screw/jumper 129
menu screen 186
minimum accessory modules 57
setup menu 190
DC-bus Unload 416
DC-bus Up 416
DC-bus voltage regulation
specifications 40, 405
digital encoder
AqB TTL 260
AqB with UVW 261
digital inputs
category 201, 205, 210, 223
pinouts 101
series A connector 144
series B connector 145
specifications 106
wiring 144, 146
disable 281, 286
display 184
download program 263
drilling hole patterns 85
DC-bus power supply 86
regenerative bus supply 87
system mounting toolkit 88

drive module
behavior 287
firmware 195
replacement 329
dual-axis inverter 17, 376
connector locations 94
shield clamp 161
wiring requirements 139
dynamic motor test 438

E

earth ground 134
EMC
motor ground termination 156
EMI (electromagnetic interference)
bonding 65
enable request 414
enable time synchronization 198
enclosure
power dissipation 53
requirements 39
sizing 52
encoder 116
phasing 117
support
DSL 112
universal 112
erratic operation 279
Ethernet connector
pinouts 103
EtherNet/IP
connecting cables 181
connections 107
PORT1 and PORT2 connectors 181
exception 281
action 281
exception actions 281
exceptions category 249, 255
extended
cluster 395
DC-bus 395, 396
speed 180, 462
extended DC-bus
interconnect diagram 350, 351
extended speed
configure 463
extension module 17, 57
external active shunt 74, 75
wiring 178
external passive shunt resistor 72, 73
wiring 177

F

fan/pump 422
volts/hertz 240
fault
code overview 274
code summary 275
feedback
configurations 28
feedback-only axis 222, 231
specifications 112
field weakening 462
firmware upgrade
ControlFLASH Plus 384, 387
ControlFLASH Plus software 381
ControlFLASH software 381
system requirements 381
verify upgrade 393
flux up 431
attributes 432
frequency control category 235, 237, 240
fuse selection 46

G

general
category 200, 204, 208, 213, 231, 233, 242, 246, 251
ground
multiple subpanels 135
screw/jumper 129
grounded-wye power configuration 123, 126
Group Sync Service 414

H

hardwired STO mode 32, 120, 306, 312
operation 312
pinouts 316
HF bonding 65
high-frequency
(HF) bonding 40
energy 67
Hiperface-to-DSL feedback converter kit 167
hold 286
hole patterns 85, 88
DC-bus power supply 86
regenerative bus supply 87
home screen
soft menu 184
hookup test 269, 460

I

I/O
digital inputs specifications 106
IEC 61508 304
IEC 62061 304
ignore 281
impedance
equations 44
impedance-grounded power configuration 124, 127
induction motor control 159
closed-loop axis properties 251
configure flux up 433
control methods

basic volts/hertz 421
fan/pump 422
sensorless vector 423
flux up 431
attributes 432
frequency-control axis 233
motor
analyzer category 436
and inertia tests 436
data sheet 435
model category 435
multiple skip speed 430
open-loop frequency control 420, 424, 427
skip speed 429
SLAT 444
inhibit module 383
input power wiring
24V control 140
contactor enable 143
corner-grounded power configuration 124, 128
determine input power 123
ground screw/jumper 129
grounded-wye power configuration 123, 126
impedance-grounded power configuration 124, 127
mains 142
remove ground screws 132, 133
ungrounded power configuration 125, 128
installing drive accessories
AC line filters 71
external active shunt 74, 75
external passive shunt resistor 72, 73
installing your drive 39
active shunts 50
bonding
examples 66
subpanels 67
cable categories 70
circuit breakers 46
clearance requirements 54
contactor selection 48
enclosure sizing 52
fuse selection 46
HF bonding 65
noise zones 68
passive shunts 49
shared-bus configurations 56
system mounting requirements 39
integrated SS1 mode 35
integrated STO mode 33, 34, 120, 322
drive module
replacement 329
operation 324
STO bypass 332
STO state reset 327
interconnect diagrams
2198 drive with 8720MC-RPS 356
2198 drive with 8720MC-RPS065 leader/follower 352
2198 drive with 8720MC-RPS190 354
2198 drive with HPK 365
2198 drive with LDAT 368
2198 drive with LDC 371, 372
2198 drive with MPAR/MPAI 370
2198 drive with MPAS 369
2198 drive with MPL/VPC-S/MPM/MPF/MPS 364
2198 drive with RDB 366
2198 drive with VPAR 367
2198 drive with VPC-Y 363
2198 drive with VPL/VPC-Q/VPF/VPH/VPS 362
active shunt 360
capacitor module 345
DC-bus conditioner module 349
extended system 350, 351
module status 357, 358
multiple
converter 344
iTRAK power supplies 347
notes 341
passive shunt resistor 359
regenerative bus supply 348
single
converter 343
iTRAK power supply 346
motor cable 362
inverters 94, 95, 96
catalog numbers 36
configuring 212
dual-axis 17
ground screw/jumper 130
menu screen 185
setup menu 189
single-axis 16
IOD connector
pinouts 101
wiring 144, 146
IP address 194
IPD connector
pinouts 100
wiring 142
IPM motor closed-loop axis properties 242
ISO 13849-1 304
stop category definitions 304
iTRAK power supply 137, 377
behavior 286
catalog numbers 36
configuring 207
connector locations 97
ground screw 131
menu screen 188
setup menu 192

L

Lapp 159
LCD display 184
messages 274

LDAT-Series linear thrusters 28
LDC-Series linear motors 28
line impedance
adding line reactor or transformer for
lightning strikes 43
power interruptions 43
voltage dips 43
voltage spikes 43
line reactor use cases 43
transformer 43
line reactor
use cases 43
link
link/activity status indicator 276
speed status indicator 276
load category 244, 248, 256
Logix Designer 194, 196

M

mains input power connector
pinouts 100
wiring 142
major fault 281
MAS instruction 451
master feedback 232
MDS instruction
configure 448
decrease speed sample code 450
increase speed sample code 450
ramp attributes 451, 452
ramp attributes sample code 452
start sample code 449
torque mode sample code 451
menu screens 185, 186, 187, 188
MF connector
pinouts 104
wiring 155, 167
minor fault 281
module definition 214, 215, 258
motion safety 216
safety application 215
safety connection 216
module properties 258
associated axes category 202, 206, 210, 220, 258
digital input category 201, 205, 210, 223
general category 200, 204, 208, 213
module definition 214, 215, 258
new tag 202, 206, 211, 222
power category 200, 204, 208, 217
safety category 219
module status
DC-bus power supply 357
indicator 276
regenerative bus supply 357, 358
module status connector
pinouts 105
monitored safe stop (SS1) 16
motion
direct commands
STO bypass 332
warning messages 333
drive start instruction 448
group 224
safety 216
Motion Analyzer website 13
motor
accel/decel problems 278
analyzer category 239, 257, 436
brake connector
pinouts 103
wiring 158
cable
catalog numbers 154, 158
length 38
length, max 153, 405
category 234, 243, 247, 252
compatible motors 167
data sheet 435
extended speed 463
feedback
category 253, 260, 261, 262, 263
compatibility 259
connector wiring 167
feedback connector
pinouts 104
wiring 155, 167
ground termination 156
induction 159
interconnect diagram 362
model category 435
motor and inertia tests 436
overheating 279
overload retention 453
power connector
pinouts 103
wiring 148, 158
power/brake cable preparation 160
shield clamp wiring 156, 170
testing 268
thermal models 440
tuning 268
universal feedback connector
pinouts 105
velocity 278
mounting your drive
attaching to the panel 88
drilling hole patterns 85
mounting order
accessory modules 57, 81
drive modules 78, 79, 80
shared-bus connection system 82
system mounting toolkit 88
zero-stack tab and cutout 82
MP connector
pinouts 103
wiring 148, 158
MPAI electric cylinders 28
MPAR electric cylinders 28
MPAS linear stages 28
MS connector
pinouts 105
MSF instruction 451
multi-cluster system 81

multiple
converter interconnect diagram 344
iTRAK PS interconnect diagram 347
skip speed 430

N

navigation buttons 184
network
parameters 194
status indicator 276
network encoders 116
new tag
data type 202, 206, 211, 222
noise
abnormal 279
feedback 278
reduction 71
zones 68

O

open-loop frequency control 420
out of box state 306
overtravel fault code 274

P

panel requirements 39
parameter list category 236, 238, 241, 245, 250, 255
passive shunt
connector wiring 177
interconnect diagram 359
pinouts 101
use cases 49
PCDC download 195
PFH definition 305
pinouts
2198-H2DCK 168
2198-K57CK-D15M 168
24V input power connector 100
contactor enable connector 100
DC bus connector 101
digital inputs connector 101
Ethernet connector 103
mains input power connector 100
module status connector 105
motor
brake connector 103
feedback connector 104
power connector 103
safe torque-off 316
shunt connector 101
universal feedback connector 105
planning your installation 39
polarity category 252
power category
bus
configuration 201, 205, 209, 218
regulator 201, 209
bus-sharing
group 201, 205, 209, 218, 265
group example 266
power structure 200, 204, 208, 217
power dissipation 53
power supply
cluster 395
DC-bus power supply 16
regenerative bus supply 16
power up 264
power/brake cable preparation 160
precharge time 415
publications, related 13

R

ramp attributes 452
rated slip speed 437
regenerative bus supply 16, 374
Bus Observer 228
BusVoltageReferenceSource 228
catalog numbers 36
configure axis properties
BusVoltageSetPoint 225
general category 225
configure module properties 203
connector locations 93
converter startup method 225
ground screw/jumper 129
interconnect diagram 348
menu screen 187
minimum accessory modules 59
precharge time 415
sequence operation 413
setup menu 191
wiring requirements 137
related publications 13
remove ground screws 132, 133
remove/replace
remove drive 298
remove power 294
replace drive 299
startup and configure 300
requirements
UL and CE 39
restoring hardwired STO mode 307
routing power and signal wiring 122
Running Controller mode 289

S

SAB 159
safe direction (SDI) 16
safe operational stop (SOS) 16
safe stop 1
integrated configuration 35
safe torque-off 319
bypass wiring 320
cascaded wiring 320
configurations

hardwired 32
integrated 33, 34
explicit messages 309
feature 305
hardwired STO mode 120, 306, 312
specifications 322
timing diagram 313
troubleshooting 314
integrated STO mode 120, 322
specifications 338
STO bypass 332
STO state reset 327
troubleshooting 328
out of box state 306
PFH 305
restoring hardwired STO mode 307
status bits 309
safe torque-off (STO) 16
safely limited position (SLP) 16
safely limited speed (SLS) 16
safety
actions
connected drive 288
running controller 289
application 215
category 219
connection 216
safety feedback interface (SFX) 16
scaling category 244, 248, 254
SDI 16
sensorless vector 237, 423
sequence operation
automatic method 417
discharging 418
enable request method 414
regenerative bus supply 413
series change 16
setup screens 188, 189, 190, 191, 192
SFX 16
shared-bus
connection system 82
catalog numbers 37
shared-bus configurations 56
shield clamp 156, 170
dual-axis inverter 161
single-axis inverter 163
shunt connector
pinouts 101
shunts
active 50
passive 49
shutdown 281, 286
sine/cosine 262
with Hall 263
single
converter interconnect diagram 343
iTRAK PS interconnect diagram 346
motor cable 362
single-axis inverter 16, 95, 96, 375
shield clamp 147, 163
wiring requirements 138
sizing
24V current 400
cluster 395
DC-bus group 395
extended cluster 395
extended DC-bus 395, 396
general guidelines 397
power supply cluster 395
shared-bus configurations 395
system sizing 397
example 403, 404
total system capacitance 398
skip speed 429
SLAT 442
attributes 444
configuring 445
slip test messaging 439
SLP 16
SLS 16
soft menu
home screen 184
software
Logix Designer application 196
overtravel 274
SOS 16
specifications
auxiliary
feedback 112
feedback encoders 116
brake relay 109
contactor enable relay 108
control power input 111
converter OK relay 109
DC-bus voltage regulation 40, 405
digital inputs 106
encoder phasing 117
EtherNet/IP connections 107
hardwired STO mode 322
integrated STO mode 338
motor feedback 112
absolute position 119
EnDat digital 114
EnDat sine/cosine 114
generic TTL incremental 114
Hiperface 113
sin/cos incremental 114
network encoders 116
speed limited adjustable torque 442
SPM motor closed-loop axis properties 246
SS1 stopping function 16, 35
stability control 427
standard actions 288
startup sequence 193
CIP axis states 193
static motor test 437
status indicators
capacitor module 277
link speed status 276
link/activity status 276
module status 276
network status 276
troubleshooting 276

STO connector
pinouts 316
wiring 319
STO stopping function 16
stop
drive 281
planner 281
stopping actions
configure 287
Studio 5000 Logix Designer 194
system
block diagrams
capacitor module 378
DC-bus conditioner module 379
DC-bus power supply 373
dual-axis inverter 376
iTRAK power supply 377
regenerative bus supply 374
single-axis inverter 375
components 16
ground 134
mounting requirements 39
mounting toolkit 88
overview
24V DC voltage drop 401
8720MC-RPS 27
DC-bus power supply 19
EtherNet/IP 29, 30, 31
extended DC-bus 21, 26
iTRAK power supply 22
multiple DC-bus power supplies 20
regenerative bus supply 23, 24
shared DC-bus 25
sizing
example 403, 404
system sizing 397

T

testing axes
hookup test 269
time synchronization 198
timed safe stop (SS1) 16
torque proving 453
attributes 453
configuring 455
total system capacitance 398
transformer 43
troubleshooting
alarm 281
capacitor module status 277
ControlFLASH 392
ControlFLASH Plus 381
controller/drive fault behavior 281
DC-bus supply behavior 282, 284
disable 281, 286
exceptions 281
fault
code overview 274
code summary 275
general system problems
abnormal noise 279
axis unstable 278
erratic operation 279
feedback noise 278
motor accel/decel 278
motor overheating 279
motor velocity 278
no rotation 279
hold 286
ignore 281
inverter behavior 287
iTRAK power supply behavior 286
LCD display messages 274
link speed status indicator 276
link/activity status indicator 276
major fault 281
minor fault 281
module status indicator 276
network status indicator 276
safe torque-off
hardwired STO mode 314
integrated STO mode 328
safety
actions 288
precautions 273
shutdown 281, 286
standard actions 288
status indicators 276
status only 281
stop
drive 281
planner 281
stopping actions 287
definitions 288
typical installation
24V DC voltage drop 401
8720MC-RPS 27
DC-bus power supply 19
EtherNet/IP 29, 30, 31
extended DC-bus 21, 26
iTRAK power supply 22
multiple DC-bus power supplies 20
regenerative bus supply 23, 24
shared DC-bus 25

U

UFB connector
pinouts 105
wiring 167
UL and CE requirements 39
ungrounded power configuration 125, 128
universal feedback connector kit 167
use cases
active shunt 50
passive shunt 49

V

valid feedback types 260
digital AqB TTL 260
digital AqB with UVW 261
sine/cosine 262
sine/cosine with Hall 263

velocity droop 457
attribute 457
configure 458
verify upgrade 393
virtual torque sensor 461
voltage drop
24V input power 47
voltage regulation 40, 405

W

website
certifications 304
Motion Analyzer 13
wiring
active shunt 178
BC connector 158
CED contactor enable 143
connector kit shield clamp 170
corner-grounded power configuration 124, 128
CP connector 140
customer supplied cable 173
earth ground 134
Ethernet cables 181
external
active shunt 178
passive shunt resistor 177
ground screw/jumper 129
grounded-wye power configuration 123, 126
guidelines 140
impedance-grounded power configuration 124, 127
input power type 123
IOD connector 146
IOD digital inputs 144
IPD connector 142
MF connector 155, 167
motor cable shield clamp 156
MP connector 148, 158
passive shunt 177
remove ground screws 132, 133
requirements 122
capacitor module 176
DC-bus power supply 136
dual-axis inverter 139
iTRAK power supply 137
regenerative bus supply 137
single-axis inverter 138
routing power and signal wiring 122
safe torque-off
bypass 320
cascaded 320
STO connector 319
UFB connector 167
ungrounded power configuration 125, 128

Z

zero-stack tab and cutout 82

Notes:

Rockwell Automation Support

Use these resources to access support information.

Technical Support Center	Find help with how-to videos, FAQs, chat, user forums, and product notification updates.	rok.auto/support
Knowledgebase	Access Knowledgebase articles.	rok.auto/knowledgebase
Local Technical Support Phone Numbers	Locate the telephone number for your country.	rok.auto/phonesupport
Literature Library	Find installation instructions, manuals, brochures, and technical data publications.	rok.auto/literature
Product Compatibility and Download Center (PCDC)	Download firmware, associated files (such as AOP, EDS, and DTM), and access product release notes.	rok.auto/pcdc

Documentation Feedback

Your comments help us serve your documentation needs better. If you have any suggestions on how to improve our content, complete the form at rok.auto/docfeedback.

Waste Electrical and Electronic Equipment (WEEE)

At the end of life, this equipment should be collected separately from any unsorted municipal waste.

Rockwell Automation maintains current product environmental information on its website at rok.auto/pec.

Allen-Bradley, CompactLogix, ControlFLASH, ControlFLASH Plus, ControlLogix, Encompass, expanding human possibility, FactoryTalk, GuardLogix, iTRAK, Kinetix, LDC-Series, Logix 5000, PanelView, POINT Guard I/O, POINT I/O, PowerFlex, Rockwell Automation, RSLinx, RSLogix 5000, Stratix, Studio 5000, and Studio 5000 Logix Designer are trademarks of Rockwell Automation, Inc.

CIP, CIP Motion, CIP Safety, CIP Security, CIP Sync, and EtherNet/IP are trademarks of ODVA, Inc.

Trademarks not belonging to Rockwell Automation are property of their respective companies.

Rockwell Otomasyon Ticaret A.Ş. Kar Plaza İş Merkezi E Blok Kat:6 34752, İçerenköy, İstanbul, Tel: +90 (216) 5698400 EEE YÖnetmeliğine Uygundur

Connect with us.

rockwellautomation.com — expanding **human possibility**™

AMERICAS: Rockwell Automation, 1201 South Second Street, Milwaukee, WI 53204-2496 USA, Tel: (1) 414.382.2000, Fax: (1) 414.382.4444
EUROPE/MIDDLE EAST/AFRICA: Rockwell Automation NV, Pegasus Park, De Kleetlaan 12a, 1831 Diegem, Belgium, Tel: (32) 2 663 0600, Fax: (32) 2 663 0640
ASIA PACIFIC: Rockwell Automation, Level 14, Core F, Cyberport 3, 100 Cyberport Road, Hong Kong, Tel: (852) 2887 4788, Fax: (852) 2508 1846

Publication 2198-UM002K-EN-P - October 2020
Supersedes Publication 2198-UM002J-EN-P - June 2020

Copyright © 2020 Rockwell Automation, Inc. All rights reserved. Printed in the U.S.A.