Optical	Sensing Mode	Clear object
	Sensing Distance	1.2m
	Field of View	1.5°
	Transmitting LED	Visible Red 660nm
	Sensitivity Adjustment	Yes, single turn
Electrical	Supply Voltage	10.8-30V DC (DC models), 21.6-264V AC/DC (AC/DC models)
	Current Consumption	35mA maximum
	Protection	False pulse on power up, reverse polarity, output short-circuit protection, overvoltage
	Output Type	Dual NPN and PNP (DC models), MOSFET (AC/DC models)
	Output Load Voltage/Current	100mA @ 30V DC (DC models), 100mA @ 264V AC/DC (AC/DC models)
	Output Energized	Light/Dark operate by catalog number
	Output Response Time	0.5ms (DC models), 1ms (AC/DC models)
Mechanical	Housing Material	Mindel
	Lens Material	Acrylic
	Indicators	Yellow: Output, Green: Power, Orange: Margin/SCP
Environmental	Operating Temperature	-25°C to +70°C (-13°F to +158°F)
	Operating Environment	NEMA 3R, 4X, 6P; IP67 1200psi washdown
	Vibration	10-55Hz, 1mm amplitude, Meets or exceeds IEC 947-5-2
	Shock	30G with 1ms pulse duration, Meets or exceeds IEC 947-5-2
	Relative Humidity	Up to 95%
	Approvals	UL, CSA, CE marked for all applicable directives
Accessories	Supplied	92-90 Reflector
		18mm locknut
	Optional	889D-F4AC-2 cordset (DC models), 889R-F4AEA-2 cordset (AC/DC models)
		60-2649 Tilt/Swivel Mounting Bracket
		60-2657 Mounting bracket, metal

LED Function Tables

DC Models

Label	Color	State	Status
Output	Yellow	OFF	Output de energized
		ON	Output energized
		Flashing	Output SCP active
Margin	Orange	OFF	Margin < 2.5
		ON	Margin >2.5
		Flashing	Output SCP active
Power	Green	OFF	Sensor not powered, output active, SCP active
		ON	Sensor powered

AC/DC Models

Label	Color	State	Status
Output	Yellow	OFF	Output de energized or SCP active
		ON	Output energized
Margin	Orange	OFF	Margin < 2.5
		ON	Margin >2.5
		Flashing	Output SCP active (short circuit)
Power	Green	OFF	Sensor not powered
		ON	Sensor powered or SCP active

Short-Circuit Protection Feature (SCP)

RightSight photoelectric sensors provide short-circuit protection (SCP) on the output leads. This feature is intended to protect the sensor from damage in the event that the output load is shorted to ground. If this condition does occur, the SCP will activate and the orange and yellow LEDs will flash (for AC/DC models only the orange indicator will flash) until the source of the short is removed (power must be reset for AC/DC models). The SCP limits are set to 100mA over the entire voltage range.

Typical Response Curves

Margin Curve

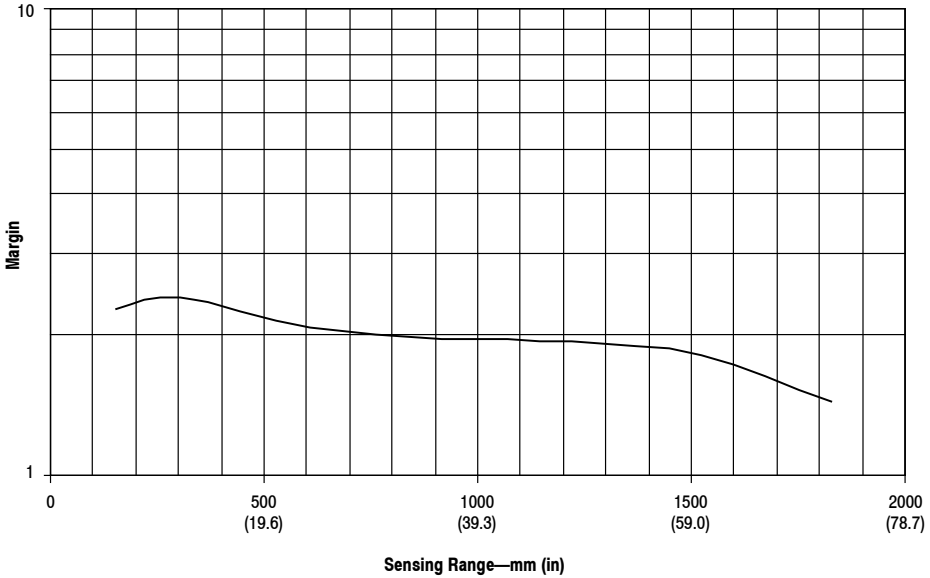

Beam Pattern

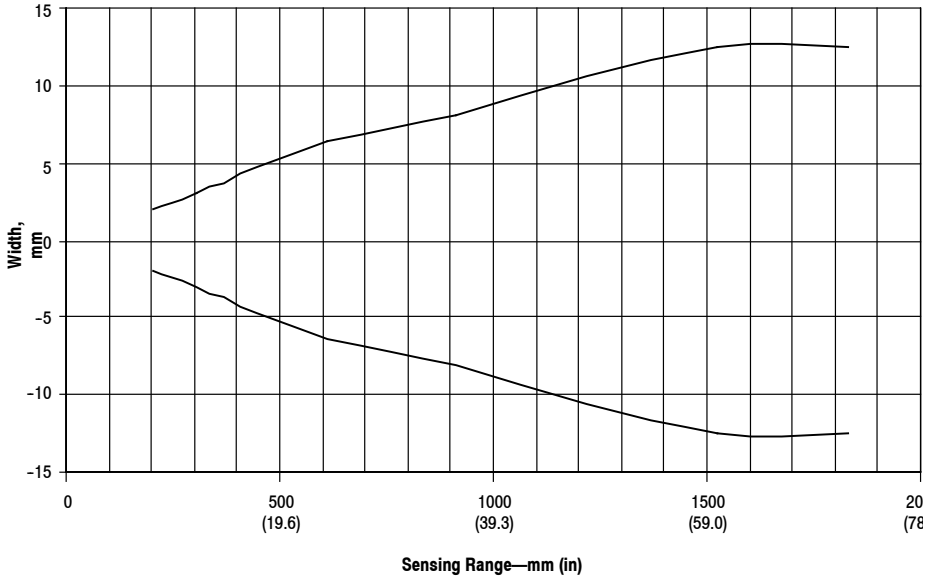

Wiring Diagrams

10.8–30V DC Sensors

Models with Dual NPN and PNP Outputs

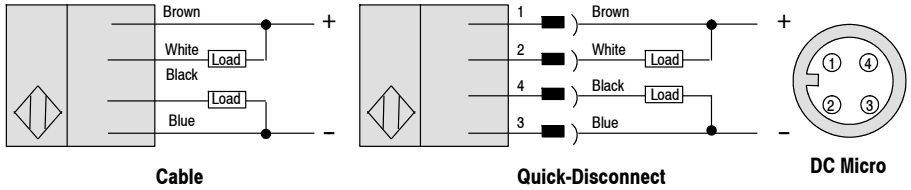

Note: All wire colors on quick-disconnect models shown refer to Allen-Bradley cordsets.

21.6–264V AC/DC Sensors

AC Wiring for 42EF-_ _ _C_ _-_ _ Models

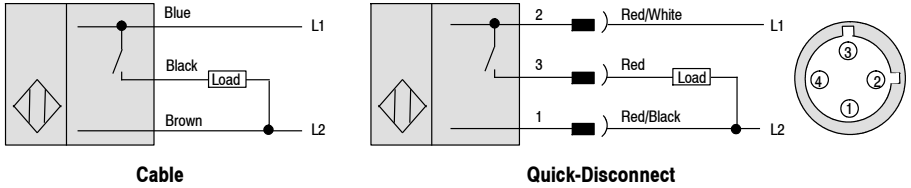

DC Wiring for 42EF-_ _ _C_ _-_ _ Models

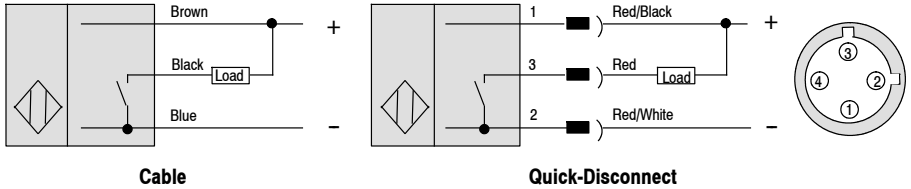

Sensor Dimensions—mm (inches)

AC/DC

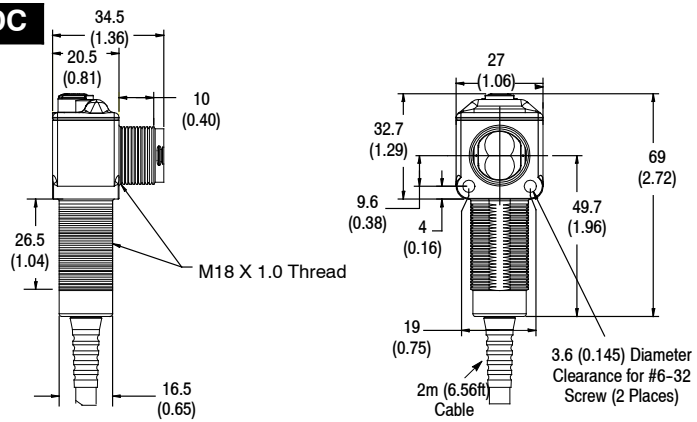

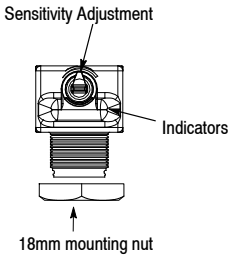

DC

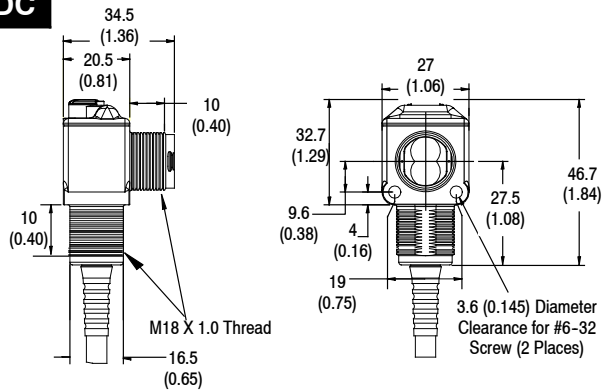

Accessories

Right Angle Bracket #60-2657

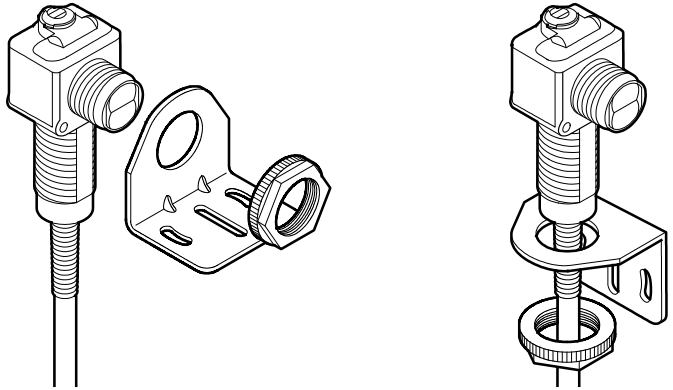

Swivel/Tilt Bracket #60-2649

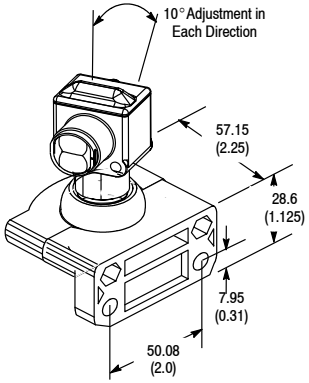

Notes

1. Damage may occur to sensor housing if torque above 20in-lb is applied to the 18mm locknut.
2. Optional mounting kit (60-2716) comes with two 75012-025-01, one 75012-097-01 locknut, internal tooth star washer, and screws/nuts for through-hole mounting.

Configuring the Sensor

All ClearSight RightSight models contain a single turn adjustment knob on the top cover. This knob controls the sensitivity of the sensor to the light being reflected back toward it by the reflector. The factory default setting is at maximum sensitivity

1. Visually align the sensor on the reflector until the yellow output LED turns ON (light operate models) or turns OFF (dark operate models). Also verify that the orange margin LED turns ON.
2. To be certain that the beam is centered, it is required to sweep the sensor in both the horizontal and vertical planes and determine at what position the output indicator goes ON and then goes OFF. Set the sensor midway between both positions. The visible red beam of the sensor will be visisble on the reflector and can be used as an alignment aid.
3. Break the beam with the object to be detected and check if the output indicator turns ON (dark operate models). If this does not occur, turn down the sensitivity adjustment until it does. Restore the light beam by removing the object and check if the indicator turns OFF again and that the orange margin LED comes ON. If this does not occur, increase the size of the reflector or decrease the distance between the reflector and the sensor.

In some applications it may be necessary to slightly angle the sensor and reflector into the target to minimize false triggering of the sensor output. Depending on the type of clear object to be sensed, a sensor with coaxial optics like the ClearSight 10,000 or ClearSight 9000 models may be required.

Accessories—Description	Catalog Number
Mounting Kit	**60-2716**
Clamp Style Bracket	**871A-BP18**
Flush Mount Adaptor	**60-2590**
Field Mount Terminal Chamber—4-pin DC Micro	**871A-TS4-DM**
Cordset—2m (6.5 ft), 4-pin DC Micro	**889D-F4AC-2**
Cordset—2m (6.5 ft), 4-pin AC Micro	**889R-F4AEA-2**
Reflector—1.25 inch diameter	**92-47**
Reflector—3 inch diameter	**92-39**