**Installation Instructions**

Original Instructions

# ArmorKinetix 2090 Cables and Connectors

Catalog Numbers 2090-CDHIFS-12AF, 2090-CDHP1S-12AF, 2090-CSBM1P7-14AF, 2090-CPWFLP7-14AF, 2090-CFBM7S7-CDAF, 2090-CFBFLS7-CDAF, 2090-CDET, 2090-CDHT, 2090-CDFT, 2090-CDPT


| Topic | Page |
|---|---|
| Cable Catalog Numbers | 1 |
| Before You Begin | 3 |
| ArmorKinetix Cable System Overview | 4 |
| Guidelines for Cable and Connector Installation | 5 |
| ArmorKinetix PIM to DSx Hybrid Cable Installation | 5 |
| ArmorKinetix DSx to DSx Hybrid Cable Installation | 6 |
| ArmorKinetix DSD to Kinetix VPL/MPL Motor Power/Feedback Cable Installation | 7 |
| ArmorKinetix DSD to Induction Motor Power Cable Installation | 7 |
| ArmorKinetix DSD to Kinetix Motor Feedback Cable Installation | 8 |
| ArmorKinetix DSD to Induction Motor and Auxiliary (stand-alone) Feedback Cable Installation | 8 |
| ArmorKinetix 2090 Hybrid Connector Communication Extension | 9 |
| Cable Bend Radius Specifications | 9 |
| ArmorKinetix Cables Environmental Specifications | 10 |
| Additional Resources | 10 |


## Cable Catalog Numbers

Catalog numbers consist of various characters, each of which identifies a specific option for that component. Use the catalog numbering charts below to understand the configuration of your component. For the cable type: PUR = Polyurethane and TPE = Thermoplastic Elastomer.

### ArmorKinetix PIM to ArmorKinetix DSx Hybrid Cables

This cable connects the ArmorKinetix® Power Interface Module (PIM) to either the ArmorKinetix Distributed Servo Motor (DSM) or the Distributed Servo Drive (DSD).

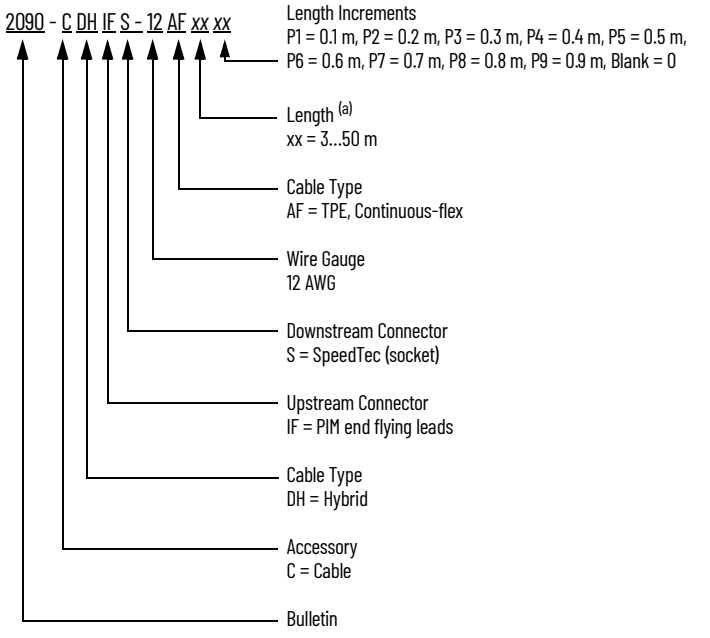


(a) For 3 m to 5 m cable lengths, cables are available in 0.1 m increments. For cable lengths longer than 5 m, cables are available in 0.5 m increments.

## ArmorKinetix DSx to DSx Hybrid Cables

This cable connects distributed servo drives and motors to each other.

2090 - C DH P1 S- 12 AF xx xx

- Length Increments
  P1 = 0.1 m, P2 = 0.2 m, P3 = 0.3 m, P4 = 0.4 m,
  P5 = 0.5 m, P6 = 0.6 m, P7 = 0.7 m, P8 = 0.8 m, P9 = 0.9 m,
  Blank = 0 m
- Length [(a)]
  xx = 0.0....30 m
  J = DSD Zero Stack Hybrid Cable Jumper
- Cable Type
  AF = TPE, Continuous-flex
- Wire Gauge
  12 AWG
- Downstream Connector
  S = SpeedTec (socket)
- Upstream Connector
  P1 = SpeedTec (pin)
- Cable Type
  DH = Hybrid
- Accessory
  C = Cable
- Bulletin

(a) For 0.5...5 m cable lengths, cables are available in 0.1 m increments. For cable lengths longer than 5 m, cables are available in 0.5 m increments.

## ArmorKinetix DSD to Kinetix VPL/MPL Motor Power Cable

This cable connects the distributed servo drive to Kinetix® VPL/MPL motors.

2090 - C SB M1 P7- 14 AF xx

- Length
  xx = 1 m, 2 m, 3 m, 4 m
- Cable Type
  AF = PUR, Continuous-flex
- Wire Gauge
  14 AWG
- DSD Power/Single Connector
  P7 = SpeedTec (pin)
- Motor Hybrid/Single Connector
  M1 = SpeedTec (socket)
- Cable Type
  SB = VP Single and Brake / MP Power and Brake Cable
- Accessory
  C = Cable
- Bulletin

## ArmorKinetix DSD to Induction Motor Power Cable

This cable connects the DSD to induction motors with open loop, Hiperface, incremental TTL, and generic SIN/COS encoders.

2090 - C PW FL P7- 14 AF xx

- Length
  xx = 1 m, 2 m, 3 m, 4 m
- Cable Type
  AF = PUR, Continuous-flex
- Wire Gauge
  14 AWG
- DSD Power/Single Connector
  P7 = SpeedTec (pin)
- Induction Motors
  FL = Flying Lead
- Cable Type
  PW = Power only cable
- Accessory
  C = Cable
- Bulletin

## ArmorKinetix DSD to Kinetix Motor Feedback Cable

This cable connects the Kinetix motor feedback to the distributed servo drive.

2090 - C FB M7 S7- CD AF xx

- Length
  xx = 1 m, 2 m, 3 m, 4 m
- Cable Type
  AF = PUR, Continuous-flex
- Feedback Type
  CD = Hiperface
- DSD Feedback Connector
  S7 = SpeedTec (socket)
- Motor end Connector
  M7 = SpeedTec (socket)
- Cable Type
  FB = Feedback Cable
- Accessory
  C = Cable
- Bulletin

## ArmorKinetix DSD to Induction Motor Feedback or Auxiliary Feedback Cable

This cable connects an induction motor feedback or auxiliary feedback device to the distributed servo drive.

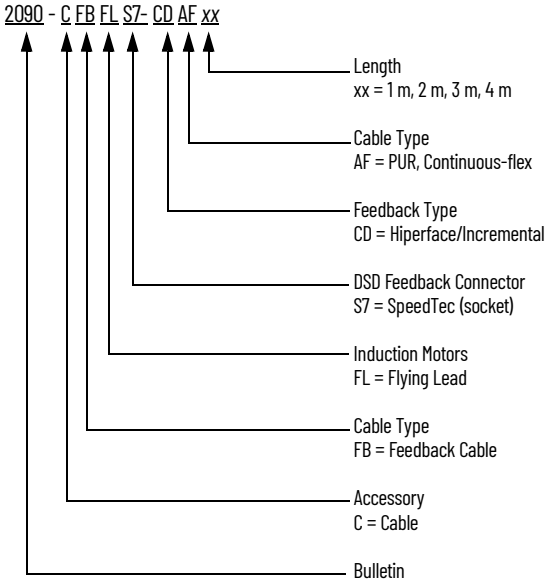


# Before You Begin

Remove all packing material from within and around the item. After unpacking, verify the catalog number against the purchase order, and visually inspect the cable and each connector for damage. If necessary, immediately notify the carrier of any shipping damage.

Cables are stored and shipped in a coil, and will retain this shape unless you straighten the cable. To straighten a cable, hang a short cable from its mid-point or lay a long cable on the floor in a straight line. Any coiling that persists should relax within 24 hours. Doing this results in a cable that is easier to install.

Observe the following precautions when installing the cables in a servo system. Failure to observe these safety notices could result in personal injury or damage to the motor and equipment.

**SHOCK HAZARD:** To avoid the hazard of electrical shock, be sure to ground any cable providing power at a minimum of one point. To prevent the build-up of electrical energy, factory-supplied cables use one of these grounding techniques:
- Bond the overall shield to the connector housing.
- Make sure there is a direct connection-to-ground for each cable shield.
- Connect an exposed cable braid or a ground wire, if present, to the power cable clamp, housing, or another suitable chassis ground.

Failure to observe these safety procedures could result in personal injury or equipment damage.

**ATTENTION:** Arcing or unexpected motion can occur if cables are connected or disconnected while power is applied to the ArmorKinetix system. Before working on an ArmorKinetix system, disconnect power and wait the full time interval as indicated in the warning on the PIM module or verify the DC bus voltage at the PIM module measures less than 60V DC.
Failure to observe this precaution could result in severe bodily injury or loss of life, and damage to the product will occur.

**ATTENTION:** The maximum length of cabling between the PIM and the last DSD or DSM unit in the system must not exceed 140 m (459 ft).

**ATTENTION:** The hybrid connectors on the DSD or DSM modules are designed to be rotated into a fixed position during installation, and remain in that position without further adjustment. Strictly limit the applied forces and the number of times the hybrid connectors are rotated to make sure the connectors meet the specified IP ratings.
Apply force only to the connector and cable plug. Do not apply force to the cable extending from the cable plug. No tools, for example pliers or vise-grips, should be used to assist with the rotation of the connector.
Failure to observe safety precautions could result in damage to the DSD or DSM module and its components.

**ATTENTION:** To avoid personal injury and damage to the DSD or DSM, do not lift or handle the DSD or DSM by the hybrid connectors.

# ArmorKinetix Cable System Overview

Each ArmorKinetix PIM module supports up to 24 ArmorKinetix DSD and/or DSM modules. Total cable length for the ArmorKinetix system (PIM, DSD including motor connections, and DSM modules) is 140 m (459 ft) maximum.

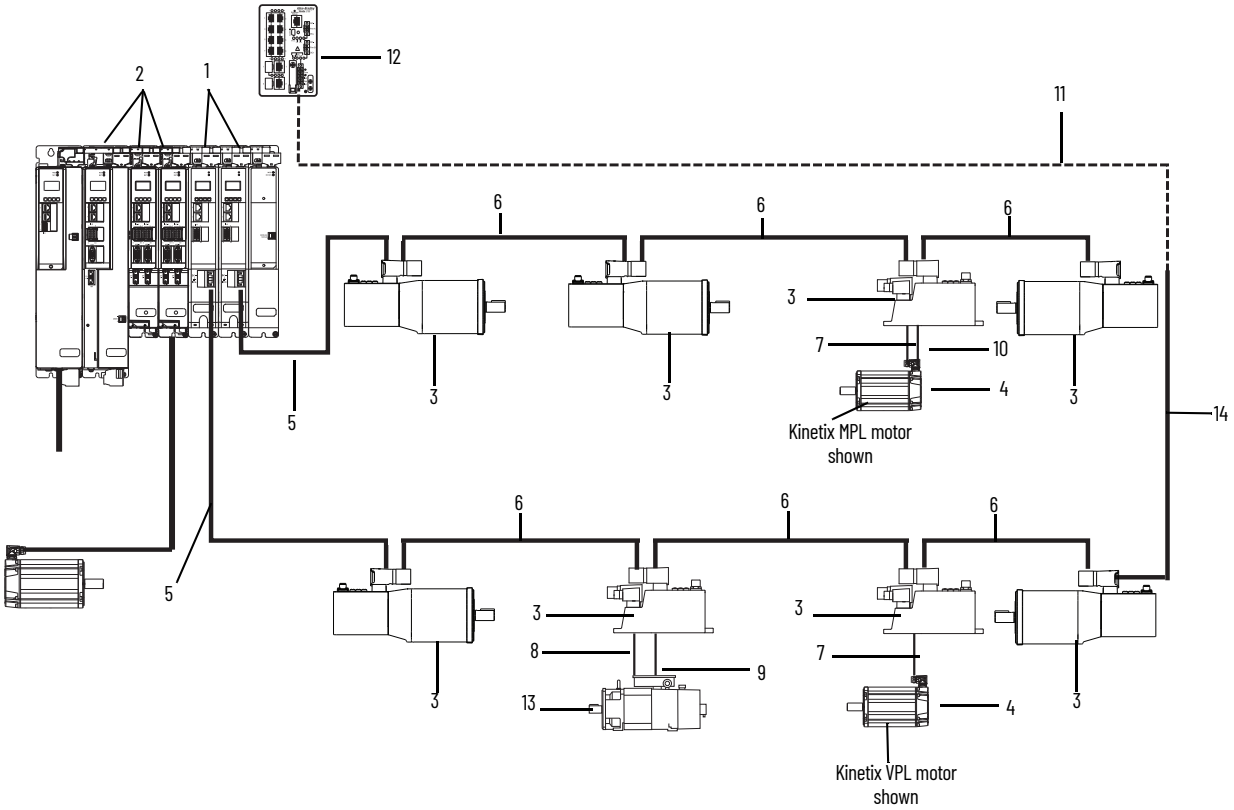


| Item | Description | Item | Description |
|---|---|---|---|
| 1 | ArmorKinetix PIM Modules | 8 | ArmorKinetix DSD to Induction Motor Power Cable (2090-CPWFLP7-14AF*xx*)<br>1...4 m (3.28...13.12 ft) |
| 2 | Kinetix 5700 Servo Drives | 9 | ArmorKinetix DSD to Induction Motor Feedback or Stand-alone Feedback Cable (2090-CFBFLS7-CDAF*xx*) 1...4 m (3.28...13.12 ft) |
| 3 | ArmorKinetix DSD or DSM Module | 10 | ArmorKinetix DSD to Kinetix Motor Feedback Cable (2090-CFBM7S7-CDAF*xx*)<br>1...4 m (3.28...13.12 ft) |
| 4 | Kinetix VPL or Kinetix MPL Motor | 11 | Ethernet patchcord 10/100MB, X-code to D-code (1585D-E8TGD4E-xx)<br>85 m (278 ft) max. |
| 5 | ArmorKinetix PIM to DS*x* Hybrid Cable (2090-CDHIFS-12AF*xxxx*)<br>3...50 m (9.8...164 ft) | 12 | Managed Stratix® Switch |
| 6 | ArmorKinetix DS*x* to DS*x* Hybrid Cable (2090-CDHP1S-12AF*xxxx*)<br>0.5...30 m (1.64...98.4 ft) | 13 | Induction Motor |
| 7 | ArmorKinetix DSD to Kinetix VPL or MPL Motor Power Cable<br>(2090-CSBM1P7-14AF*xx*) 1...4 m (3.28...13.12 ft) | 14 | Communication Extension Jumper Cable (2090-CDET) |

## Guidelines for Cable and Connector Installation

Follow these guidelines when installing cables and see the Installation topics for each cable type.


- ArmorKinetix PIM to DSx Hybrid Cable Installation on page 5
- ArmorKinetix DSx to DSx Hybrid Cable Installation on page 6
- ArmorKinetix DSD to Kinetix VPL/MPL Motor Power/Feedback Cable Installation on page 7
- ArmorKinetix DSD to Induction Motor Power Cable Installation on page 7
- ArmorKinetix DSD to Kinetix Motor Feedback Cable Installation on page 8
- ArmorKinetix DSD to Induction Motor and Auxiliary (stand-alone) Feedback Cable Installation on page 8
- ArmorKinetix 2090 Hybrid Connector Communication Extension on page 9


**ATTENTION:** Arcing or unexpected motion can occur if cables are connected or disconnected while power is applied to the ArmorKinetix system. Before working on an ArmorKinetix system, disconnect power and wait the full time interval as indicated in the warning on the DS*x* module or verify the DC bus voltage at the PIM module measures less than 60V DC.
Failure to observe this precaution could result in severe bodily injury or loss of life, and damage to the product will occur.

Observe these restrictions when installing the connecting cables:

- Connect ArmorKinetix 2090 cables only after the modules are mounted.
- Prevent the cable from flexing within 150 ±25 mm (6 ±1 in.) installation areas.
- Bend cables to a specific shape only in the bend zone area. See Cable Bend Radius Specifications on page 9 for more information.
- Provide cable supports at 3 m (10 ft) intervals along the cable run to reduce tension and flexing at the connectors and other features on the cable.
- Always form a drip loop in the cables directly before each cable enters and exits the module. A drip loop is a low spot in the cable that lets liquids gather and drip off the cable rather than flow along the cable to an electrical connection or the motor.

**ATTENTION:** Cable connectors must be properly aligned before the connection is secured with the recommended degrees of rotation or torque value. Improper connector alignment is indicated by the need for excessive force, such as the use of tools, to fully seat connectors. Failure to observe these safety procedures could result in damage to the device, cables, and connector components.

- Tighten connectors properly.
- Use terminators when no additional connections are made. See page 6 for connector terminator information.

## ArmorKinetix PIM to DSx Hybrid Cable Installation

Use these guidelines as a reference when connecting the hybrid cable to the PIM module.

**ArmorKinetix PIM to DS*x* Hybrid Cable Pinout - 2090-CDHIFS-12AF*xxxx***

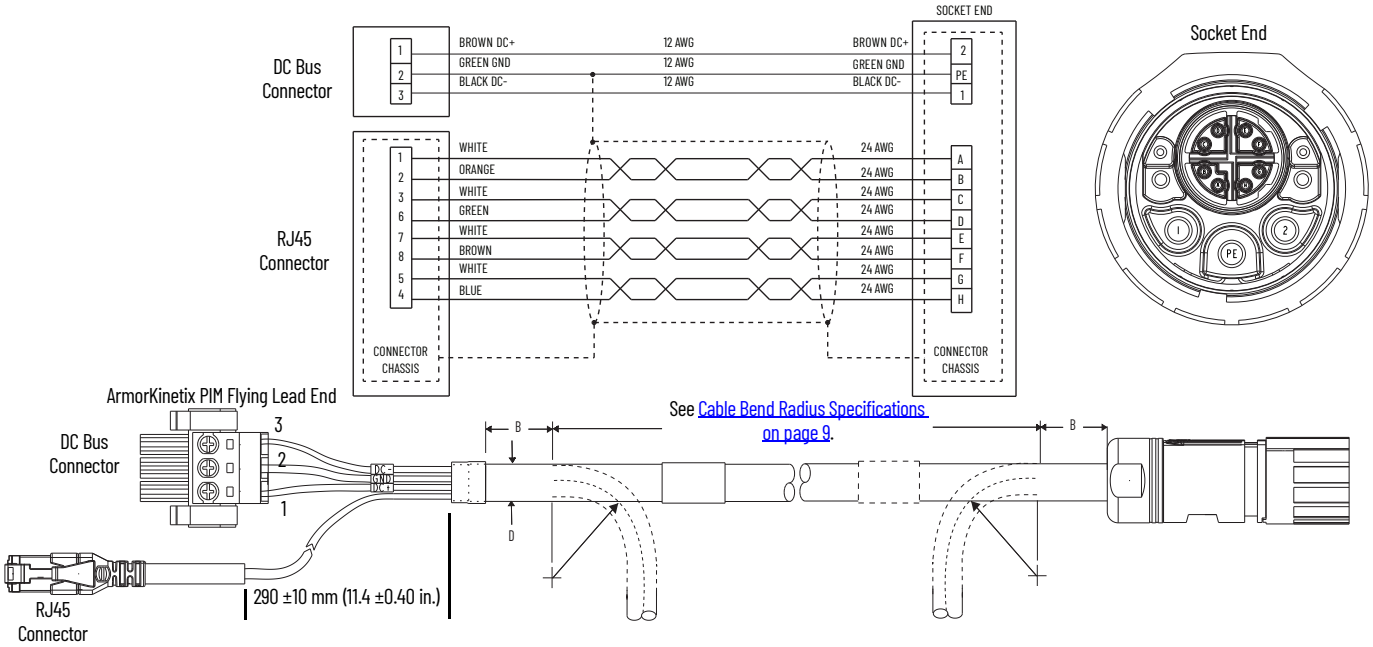


1. Route the cable to the module.
2. Insert the connector plug into the module connector.

**IMPORTANT** There is a maximum of two PIM modules per bus group, therefore, only two ArmorKinetix 2090-CDHIFS-12AF*xxxx* hybrid cables per bus group.

# ArmorKinetix DSx to DSx Hybrid Cable Installation

### ArmorKinetix DSx to DSx Hybrid Cable and ArmorKinetix DSx to DSx Zero Stack Jumper Cable Pinouts - 2090-CDHP1S-12AF*xxxx* and 2090-CDHP1S-12AFJ

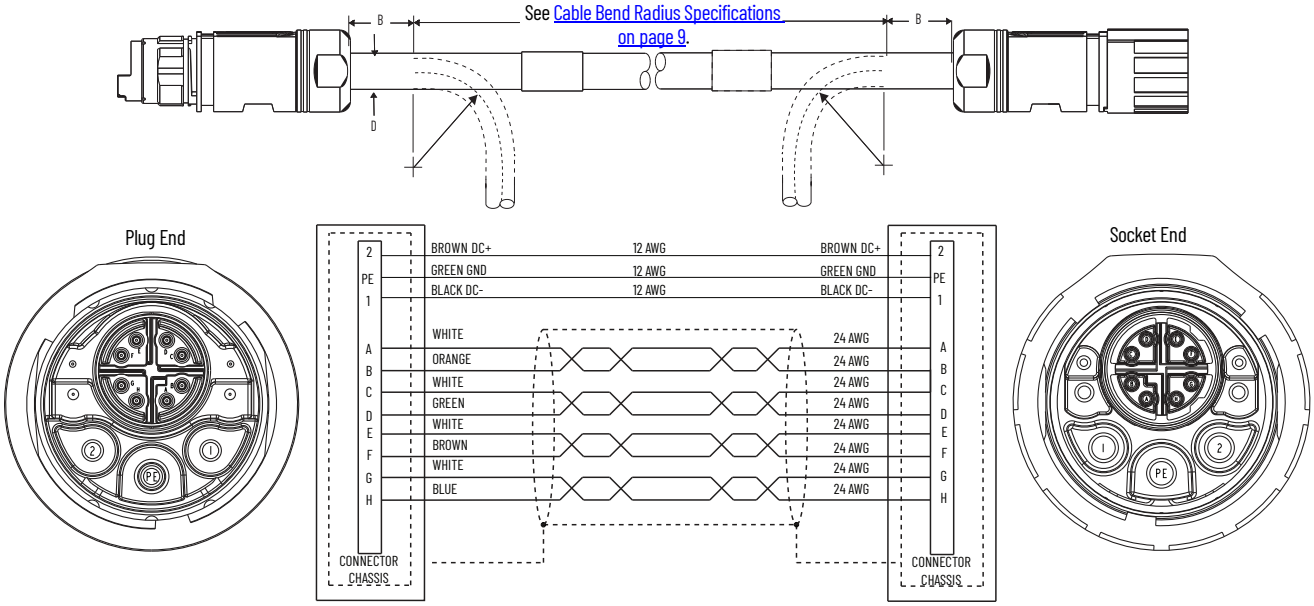


### Connector Terminator Dimensions - 2090-CDHT, 2090-CDFT, 2090-CDPT

Dimensions in millimeters (inches). Dimensions are not intended to be used for manufacturing purposes.

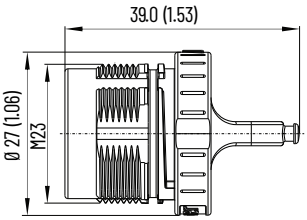


ArmorKinetix DSx Hybrid Connector Output Terminator - 2090-CDHT

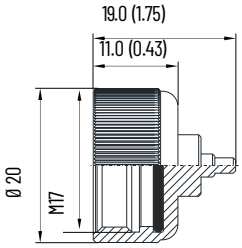


ArmorKinetix DSD Feedback Connector Terminator - 2090-CDFT

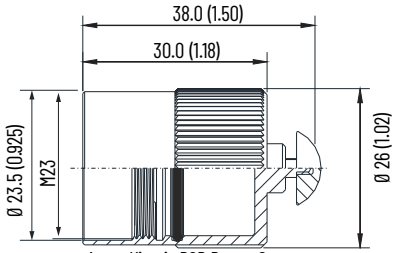


ArmorKinetix DSD Power Connector Terminator - 2090-CDPT

# ArmorKinetix DSD to Kinetix VPL/MPL Motor Power/Feedback Cable Installation

**DSD to VPL/MPL Power Cable (2090-CSBM1P7-14AF*xx*)**

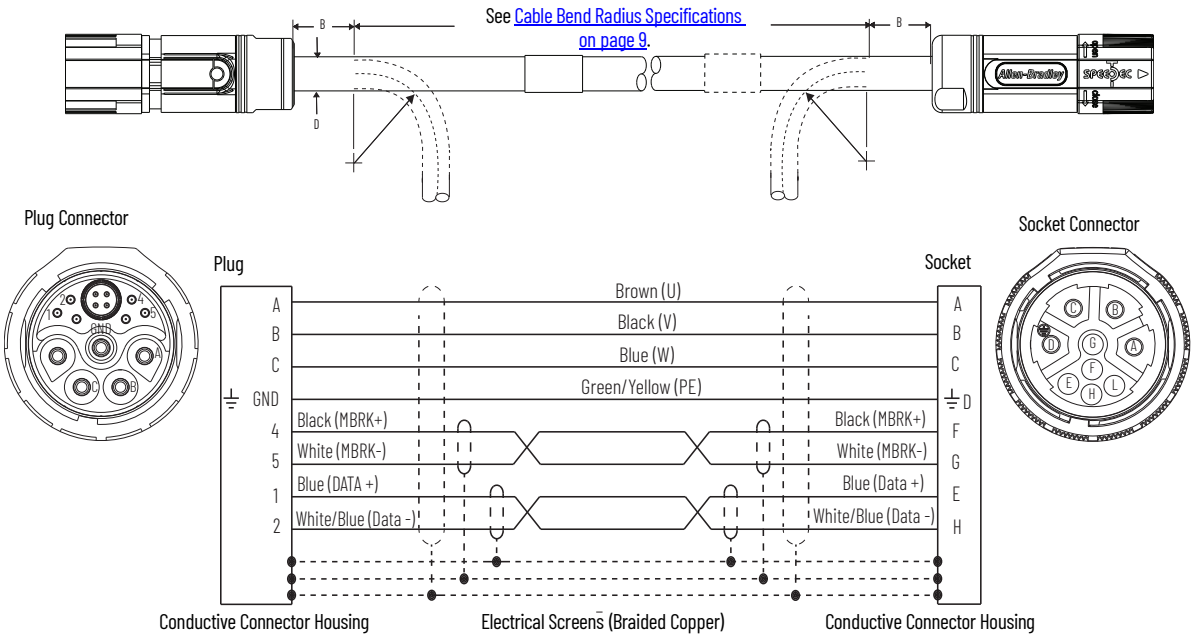


# ArmorKinetix DSD to Induction Motor Power Cable Installation

**DSD to Induction Motor Power Cable (2090-CPWFLP7-14AFxx)**

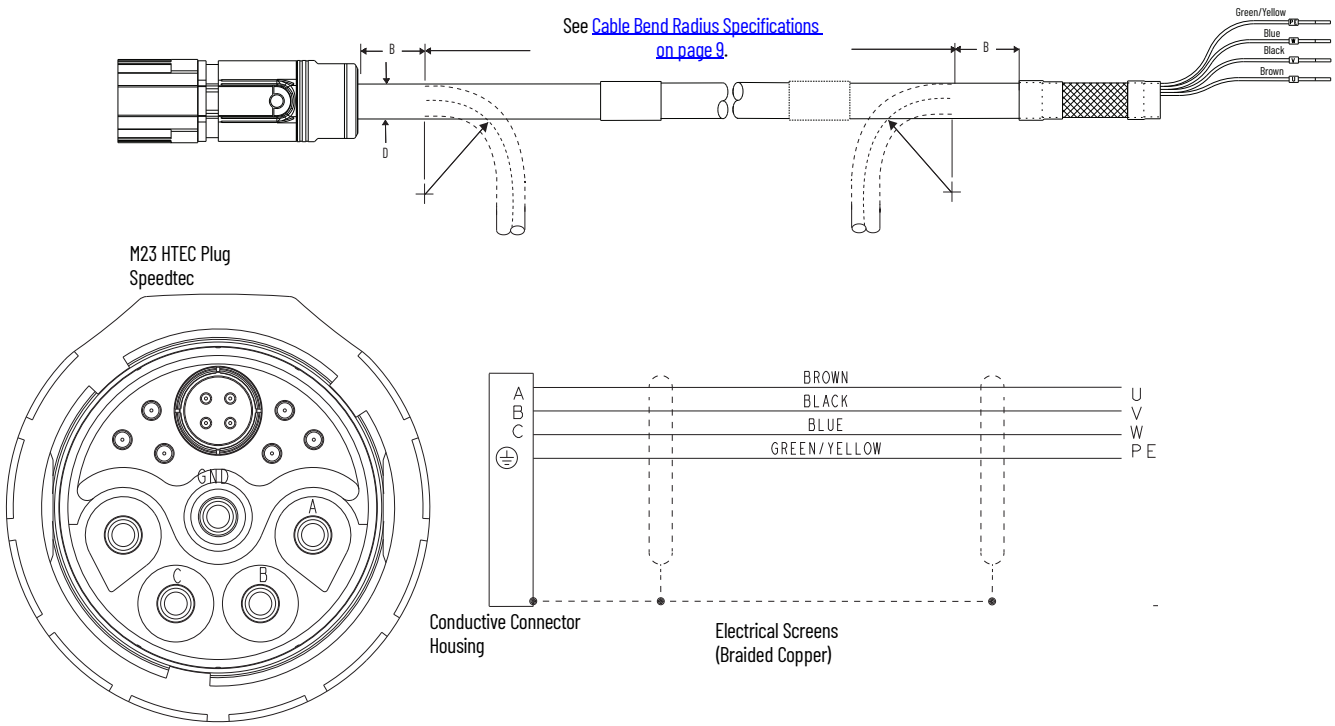

# ArmorKinetix DSD to Kinetix Motor Feedback Cable Installation

**DSD to Kinetix Motor Feedback Cable (2090-CFBM7S7-CDAFxx)**

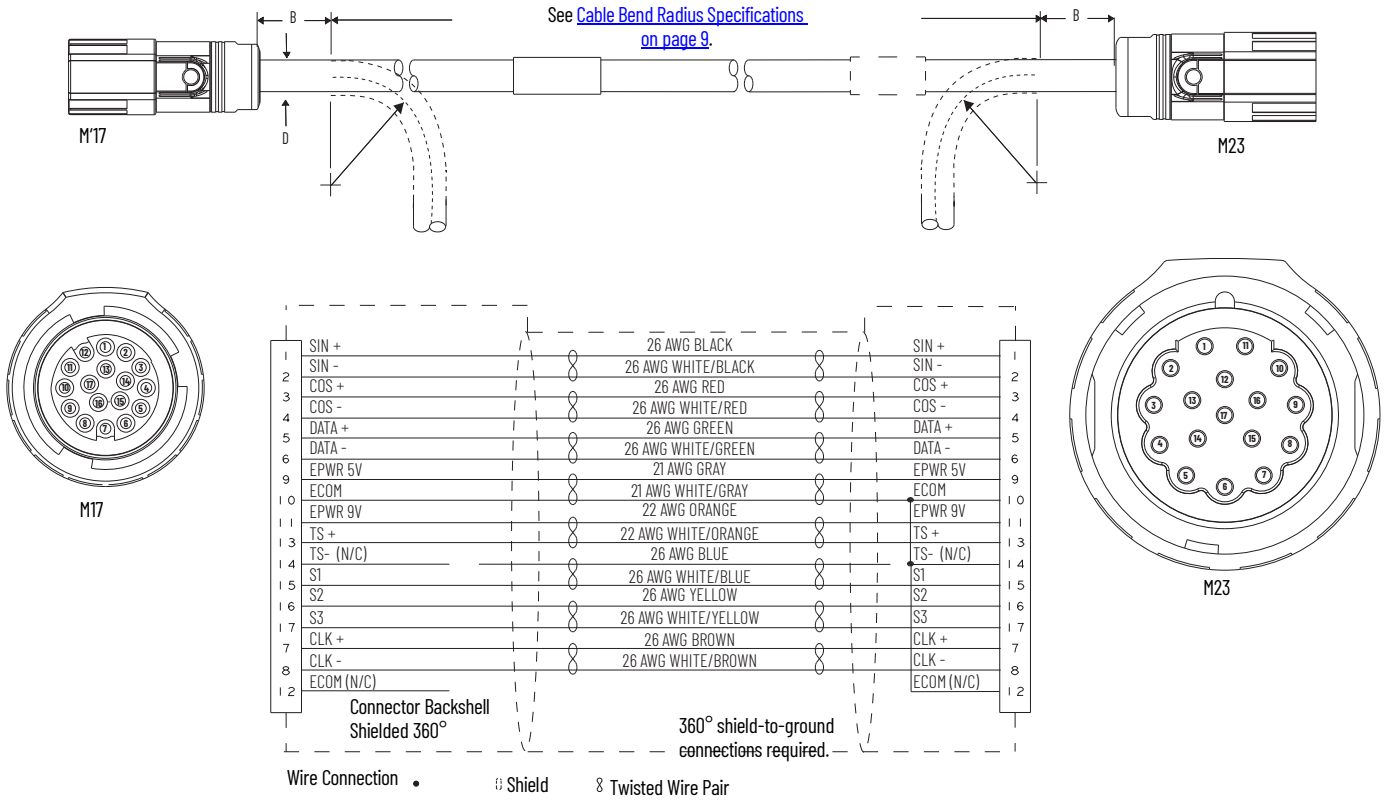


# ArmorKinetix DSD to Induction Motor and Auxiliary (stand-alone) Feedback Cable Installation

**DSD to Induction Motor and Auxiliary Feedback Cable (stand-alone) (2090-CFBFLS7-CDAFxx)**

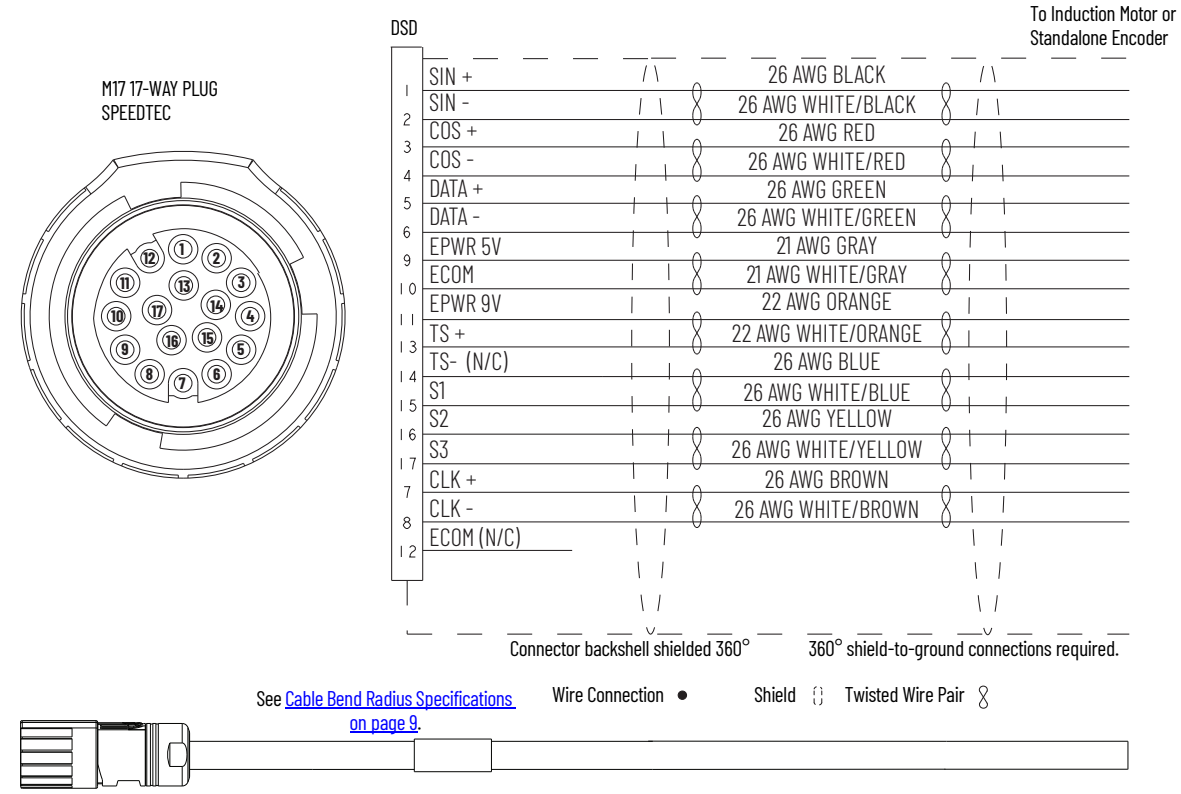

# ArmorKinetix 2090 Hybrid Connector Communication Extension

The hybrid connector communication extension has only the communication/Ethernet pins populated on the M23 side, and passes through to an M12 X-coded Ethernet connection on the other side.

**DSx Hybrid Connector - Communication Extension Jumper-cable (2090-CDET)**

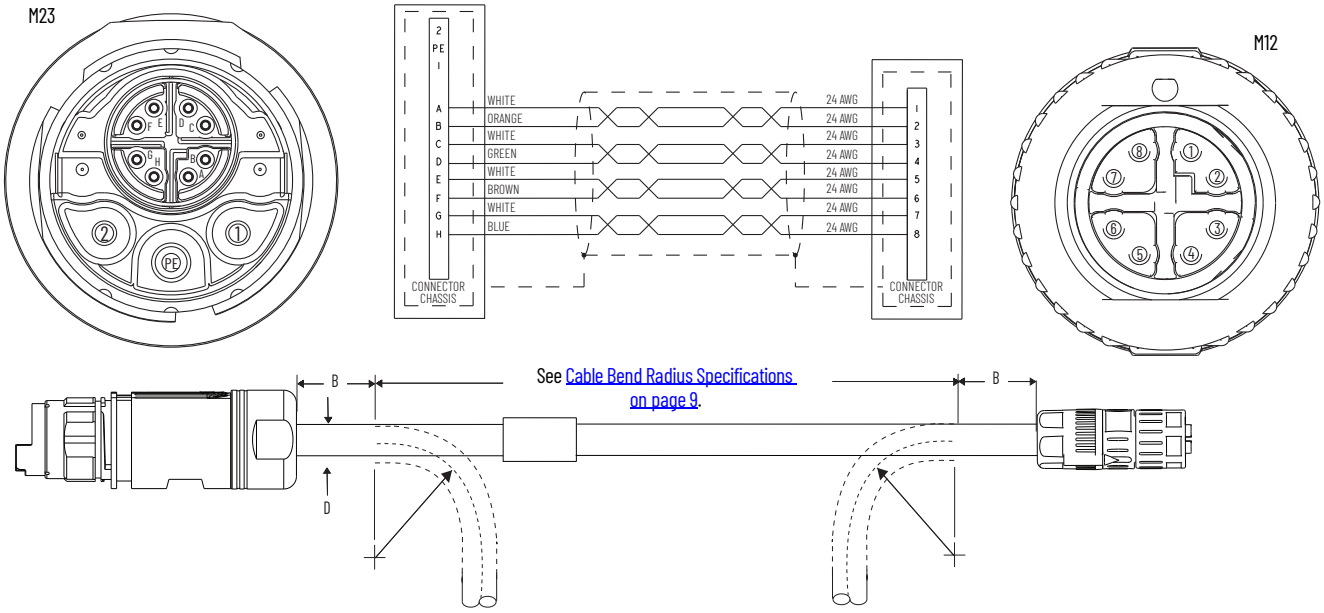


# Cable Bend Radius Specifications

**Bend Radium Definitions**

| Type of Bend Radius | Type of Cable | Description |
|---|---|---|
| Static bend radius | Continuous-flex | The static (installation) bend radius and dimension B is:<br>• 5 times the cable diameter.<br>• Do not begin a static bend inside dimension B.<br>• Use this measurement when routing the cable in a non-flex application between motor and drive (the bend area).<br>• The bend area is where standard (non-flex) or continuous-flex cables can be bent to their specified bend radius. |
| Continuous bend radius | Continuous-flex | The continuous bend radius for Bulletin 2090 single motor cables is:<br>• 10 times the cable diameter.<br>• Secure the continuous-flexing area, the recommended cable diameters (dimension B) from each end of the cable, with a rigid mount that helps prevent the cable from flexing where it connects to the motor or shield clamp. Refer to the cable carrier manufacturer's recommendations for procedure and dimensions related to flexing applications.<br>• Use this measurement when routing the cable in a continuous-flex application between motor and drive (the continuous-flexing area).<br>• The continuous flexing area is where continuous-flex cables can be flexed repeatedly.<br>• Install the cable along the neutral axis to make sure that the cable is not in contact with the inner radius of the cable carrier while flexing. |

**ArmorKinetix Cable Specification - Bend Radius**

| Cable Cat. No. | Wire Size | D | B | Static (installation) bend radius | Continuous Bend Radius | Continuous Bend Radius Factor | Expected Flex cycle at Rated Radius |
|---|---|---|---|---|---|---|---|
| 2090-CDHIFS-12AFxxxx | 12 | 13.2 | 92.4 | 66 | 132 | 10 | 10 M |
| 2090-CDHP1S-12AFxxxx | 12 | 13.2 | 92.4 | 66 | 132 | 10 | 10 M |
| 2090-CSBM1P7-14AFxx | 14 | 15.2 | 76 | 76 | 106.4 | 7 | 10 M |
| 2090-CPWFLP7-14AFxx | 14 | 15.2 | 76 | 76 | 106.4 | 7 | 10 M |
| 2090-CFBM7S7-CDAFxx | — | 9.8 | 68.6 | 49 | 98 | 10 | 10 M |
| 2090-CFBFLS7-CDAFxx | — | 9.8 | 68.6 | 49 | 98 | 10 | 10 M |
| 2090-CDET | 24 | 7 | 49 | 35 | 70 | 10 | 10 M |

## ArmorKinetix Cables Environmental Specifications

| Description | Value |
|---|---|
| Storage Temperature | -40...+85 °C (-40...+185 °F) |
| Humidity | 5...95% noncondensing |
| IP Protection | IP66, IP67 |
| Mechanical Shock and Vibration | 25 g shock and 5 g vibe |
| Oil Resistance | Oil resistance to UL 50E Type 12 |
| UV Resistance | Sunlight resistance per UL 50E Type 12 |
| Water Absorption | Water absorption to be tested per UL 1581 - IEC 60811 for 168 hours (7 days). |

## Additional Resources

These documents contain additional information concerning related products from Rockwell Automation. You can view or download publications at rok.auto/literature.

| Resource | Description |
|---|---|
| ArmorKinetix System User Manual, publication 2198-UM006 | Provides information on installing, configuring, startup, troubleshooting, and applications for your ArmorKinetix drive system. |
| Kinetix® 5700 Servo Drives User Manual, publication 2198-UM002 | Provides information to install, configure, start, and troubleshoot your Kinetix 5700 servo drive system. |
| Kinetix Rotary and Linear Motion Cable Specifications Technical Data, publication KNX-TD004 | Product specifications for Kinetix 2090 motor and interface cables. |
| Kinetix 5700 Drive Systems Design Guide, publication KNX-RM010 | System design guide to select the required (drive specific) drive module, power accessory, feedback connector kit, and motor cable catalog numbers for your Kinetix 5700 drive system. |
| EtherNet/IP Network Devices User Manual, ENET-UM006 | Describes how to configure and use EtherNet/IP devices to communicate on the EtherNet/IP network. |
| Ethernet Reference Manual, ENET-RM002 | Describes basic Ethernet concepts, infrastructure components, and infrastructure features. |
| American Standards, Configurations, and Ratings: Introduction to Motor Circuit Design, publication IC-AT001 | Provides an overview of American motor circuit design based on methods that are outlined in the NEC. |
| Safety Guidelines for the Application, Installation, and Maintenance of Solid-state Control, publication SGI-1.1 | Designed to harmonize with NEMA Standards Publication No. ICS 1.1-1987 and provides general guidelines for the application, installation, and maintenance of solid-state control in the form of individual devices or packaged assemblies incorporating solid-state components. |
| Industrial Automation Wiring and Grounding Guidelines, publication 1770-4.1 | Provides general guidelines for installing a Rockwell Automation industrial system. |
| Product Certifications website, rok.auto/certifications. | Provides declarations of conformity, certificates, and other certification details. |

## Waste Electrical and Electronic Equipment (WEEE)

At the end of life, this equipment should be collected separately from any unsorted municipal waste.

Rockwell Automation maintains current product environmental compliance information on its website at rok.auto/pec.

Your comments help us serve your documentation needs better. If you have any suggestions on how to improve our content, complete the form at rok.auto/docfeedback.
For technical support, visit rok.auto/support.

Rockwell Otomasyon Ticaret A.Ş. Kar Plaza İş Merkezi E Blok Kat:6 34752 İçerenköy, İstanbul, Tel: +90 (216) 5698400 EEE Yönetmeliğine Uygundur

Connect with us.

rockwellautomation.com — expanding **human possibility**®

AMERICAS: Rockwell Automation, 1201 South Second Street, Milwaukee, WI 53204-2496 USA, Tel: (1) 414.382.2000, Fax: (1) 414.382.4444
EUROPE/MIDDLE EAST/AFRICA: Rockwell Automation NV, Pegasus Park, De Kleetlaan 12a, 1831 Diegem, Belgium, Tel: (32) 2 663 0600, Fax: (32) 2 663 0640
ASIA PACIFIC: Rockwell Automation, Level 14, Core F, Cyberport 3, 100 Cyberport Road, Hong Kong, Tel: (852) 2887 4788, Fax: (852) 2508 1846
UNITED KINGDOM: Rockwell Automation Ltd. Pitfield, Kiln Farm Milton Keynes, MK11 3DR, United Kingdom, Tel: (44)(1908) 838-800, Fax: (44)(1908) 261-917

Allen-Bradley, ArmorKinetix, expanding human possibility, Kinetix, and Rockwell Automation are trademarks of Rockwell Automation, Inc.
Trademarks not belonging to Rockwell Automation are property of their respective companies.

Publication 2090-IN053A-EN-P - April 2023
Copyright © 2023 Rockwell Automation, Inc. All rights reserved. Printed in the U.S.A.