Technical Data

Allen-Bradley

E300/E200 Electronic Overload Relay Specifications

Bulletin Numbers 193, 592

Topic	Page
Product Overview	2
Features	2
Catalog Number Explanation	7
Product Selection	10
Specifications	16
Wiring Diagrams	16
Electrical Specifications	18
Product Safety Information	21
Approximate Dimensions	25

Summary

The E300™ and E200™ Electronic Overload Relays are the newest technology for overload protection. The modular design, communication options, diagnostic information, simplified wiring, and integration into Logix technology make it the ideal overload for motor control applications in an automation system.

The E300/E200 relay consists of three modules: sensing, control, and communications. You have choices in each of the three with additional accessories to tailor the electronic overload for the exact needs of your application. The communication module determines whether the complete assembled device is an E300 or an E200 overload relay.

Product Overview

This section gives you an overview of the E300/E200 Electronic Overload Relays and its features.

Relay Type	Bimetallic[1]	E1 Plus[2]	E200	E300
Protection Features				
Overload	✓	✓	✓	✓
Phase Loss		✓	✓	✓
Ground Fault		✓	✓	✓
Current Imbalance	✓		✓	✓
Jam		✓	✓	✓
Over/ Under Voltage			✓	✓
Voltage Imbalance			✓	✓
Over/ Under Power			✓	✓
Diagnostics Features				
% Full Load Amperes (FLA)		✓	✓	✓
% Thermal Capacity Utilization (TCU)		✓	✓	✓
Voltage			✓	✓
Power			✓	✓
Energy			✓	✓
Integration Features				
DeviceLogix™			✓	✓
Logix Controller		✓		✓
Connected Components Workbench™ Software			✓	
EtherNet/IP™		Optional Expansion		Embedded (dual-port)
DeviceNet™		Optional Expansion		Embedded (single-port)
Local Programming Method		EtherNet/IP or DeviceNet[3]	USB Type B[3]	EtherNet/IP or DeviceNet[3]

(1) See publication 193-TD010 for more information.
(2) See publication 193-TD011 for more information.
(3) You can also configure E300/E200 devices using an optional expansion operator diagnostic station.

Features

The E300/E200 Electronic Overload Relay is the newest technology for overload protection. Its modular design, communication options, diagnostic information, simplified wiring, and integration into Logix technology make this the ideal overload for motor control applications in an automation system.

The E300 overload relay offers multiple communication options. In addition to dual-port EtherNet/IP connectivity, the relay now also supports DeviceNet (single-port).

The E200 overload relay (device that uses the Parameter Configuration Module) is another communication module option that is targeted for non-networked (remote applications) electronic motor overload protection applications. The E200 overload relay is part of the E300 product portfolio and is configurable using the Connected Components Workbench software. The E200 relay features a single Type B USB interface port, three rotary dials to set the FLA for the application, and an 8-position DIP switch for trip class and feature selection.

Note: Throughout this document, E300 and E200 are largely interchangeable. An overload system configured with the 193-ECM-PCM communication option correlates to an E200 assembly.

For more information on operation and maintenance of this product, see the user manual, publication 193-UM015.

Single/Three-Phase Operation

You can apply the E300/E200 Electronic Overload Relay to three-phase and single-phase applications. Straight-through wiring is available in both cases.

The E300/E200 overload relay has 54 operating modes that provide motor control functionality for the following motor starter types:

- Overload
- Non-reversing starter
- Reversing starter
- Wye/Delta (Star/Delta) starter
- Two-speed starter
- Monitoring device

Thermal Overload Features

Feature	Description
Thermal Utilization	Based RMS current measurement, the overload relay calculates a thermal model that simulates the actual heating of the motor. Percent of thermal capacity utilization (%TCU) reports this calculated value. An overload trip occurs when the value reaches 100%.
Adjustable Settings	Configure thermal overload protection by programming the motor's full load current (FLC) rating and the desired trip class (5. . .30). Programming the actual values via software ensures the accuracy of the protection.
Thermal Memory	A thermal memory circuit approximates the thermal decay for a Trip Class 20 setting. This means that the thermal model of the connected motor is maintained at all times, even if the supply power is removed.
Reset Modes	You can select between manual and automatic reset for an overload trip. The point of reset is adjustable from 1. . .100% TCU.
Time to Trip	During an overload condition, an estimated time to trip is calculated.
Time to Reset	Following an overload trip, a reset does not occur until the calculated percentage of thermal capacity utilization falls below the reset level. As this value decays, the time to reset adjusts accordingly.
Thermal Warning	A thermal warning bit is set when the calculated percentage of thermal capacity utilization exceeds the programmed thermal warning level, which has a setting range of 0. . .100% TCU.
Two-Speed Protection	There is a second FLA setting for 2-speed motor protection. What used to require two separate overload relays - one for each set of motor windings - is now accomplished with one device.

Current Monitoring Functions

The E300/E200 Electronic Overload Relay allows you to monitor the following operational data over a communications network:

- Individual phase currents — in amperes
- Individual phase currents — as a percentage of motor FLC
- Average current — in amperes
- Average current — as a percentage of motor FLC
- Percentage of thermal capacity utilized
- Current imbalance percentage
- Ground fault current

Feature	Description
Jam (Overcurrent)	The overload relay can take a motor off-line in the event of a mechanical jam. Trip adjustments include a trip setting adjustable from 50. . .600% FLA and a trip delay time with a range of 0.1. . .25.0 seconds. A separate warning setting is adjustable from 50. . .600% FLA.
Underload (Undercurrent)	A sudden drop in motor current can signal conditions such as: • Pump cavitation • Tool breakage • Belt breakage Monitoring for an underload event can provide enhanced protection for motors. The underload trip and warning settings are adjustable from 10. . .100% FLA. The trip function also includes a trip delay time with a range of 0.1. . .25.0 seconds.
Current Imbalance (Asymmetry)	Current imbalance trip and warning settings are adjustable from 10. . .100%. The trip function also includes a trip delay time with a range of 0.1. . .25.0 seconds.
Stall	Stall is a condition where the motor is not able to reach full-speed operation in the appropriate amount of time required by the application. This can result in motor overheating, as current draw is in excess of the motor's full load current rating. The adjustable stall protection has a trip setting with a range of 100. . .600% FLA, and the enable time is adjustable up to 250 seconds.
Phase Loss	Configurable phase loss protection lets you enable or disable the function plus set a time delay setting, adjustable from 0.1. . .25.0 seconds. The trip level is factory set at a current imbalance measurement of 100%.

Ground (Earth) Fault

The E300/E200 Electronic Overload Relay incorporates zero sequence (core balance) sensing into its design for low level (arcing) ground fault detection. Trip and warning settings are adjustable from 20 mA...5.0 A. For devices rated greater than 200 A and for ground fault detection less than 0.5 A, the external core balance current transformer accessory is required. This particular detection has been evaluated for compliance with Ground-Fault Sensing calibration and operating times from the Standard for Ground-Fault Sensing and Relaying Equipment per UL 1053.. The E300/E200 Electronic Overload Relay provides a max. trip-inhibit setting, offering flexibility to help prevent tripping when the ground fault current magnitude exceeds 6.5 A. This can be useful to guard against the opening of the controller when the fault current could potentially exceed the controller's interrupting capacity rating.

Note: The E300/E200 Electronic Overload Relay is not a Ground Fault Circuit Interrupter for personnel protection (or Class I) as defined in article 100 of the U.S. National Electric Code.

Control Module Features

The control module inputs support the connection of devices such as contactors, disconnect auxiliary contacts, pilot devices, limit switches, and float switches. Inputs are rated 24V DC, 120V AC, or 240V AC and are current sinking. Power for the inputs is sourced separately with customer sources. Relay contact outputs can be controlled via the network or DeviceLogix™ function blocks for performing such tasks as contactor operation.

The DeviceLogix engine lets you program custom motor control algorithms. You can write programs for distributed control applications or to turn off a motor smoothly when the network or programmable logic controller is unexpectedly lost.

Control Voltage	I/O		I/O and Protection(1)	
	Inputs	Relay Outputs	Inputs	Relay Outputs
110. . . 120V AC, 50/60 Hz	4	3	2	2
	2	2		
220. . . 240V AC, 50/60 Hz	4	3	2	2
	2	2		
24V DC	6	3	4	2
	2	2		

(1) Includes PTC thermistor and external ground fault.

The control module also monitors positive temperature coefficient (PTC) thermistors.

Sensing Module Features

The E300/E200 sensing module with voltage, current, and ground fault current provides the following:

Feature	Description
Voltage Protection	Protect against voltage issues (such as undervoltage, voltage imbalance, phase loss, frequency, and phase rotation).
Power Protection	Monitor and protect for both excessive and low real power (kW), reactive power (kVAR), apparent power (kVA), and power factor for a specific application (such as pump applications).
Voltage, Power, and Energy Monitoring	Monitor voltage, current, power (kW, kVAR, and kVA), energy (kWh, kVARh, kVAh, kW Demand, kVAR Demand, and kVA Demand), and power quality (power factor, frequency, and phase rotation) down at the motor level.

The sensing module supports:

- Voltage/current/ground fault
- Current/ground fault
- Current
- Current Range [A]
- 0.5...30
- 6...60
- 10...100
- 20...200

Communication Modules

The following communication modules are available:

Communication Module	Description
EtherNet/IP™	The EtherNet/IP communication module has two RJ45 ports that support a star, linear, and ring topology and supports the following: • 2 concurrent Class 1 connections [1 exclusive owner + (1 input only or 1 listen only)] • 6 simultaneous Class 3 connections (explicit messaging) • Embedded web server • SMTP server for trip and warning events (email and text messaging) • Embedded EDS file • Studio 5000 Add-on Profile
DeviceNet™	The DeviceNet communication module has one 5-pin DeviceNet connector and supports the following: • Read and Write of configuration parameters and real-time information at rates of 125 kb, 250 kb, and 500 kb • Communication of 16 bytes of data for I/O (implicit) Messaging to a DeviceNet scanner • Mechanical means to select the node address of the device • Same DeviceNet objects as the existing E3 Plus™ electronic overload relay • E3 Plus emulation mode (with Series B control module only) that lets you reuse configuration parameters when using tools such as ADR, DeviceNet Configuration Terminal (193-DNCT or CEP7-DNCT), and RSNetWorx™ for DeviceNet
Parameter Configuration Module (E200)	The Parameter Configuration Module (PCM) has one Type B USB interface port and supports the following: • Stand-alone non-networked applications • Configurable with Connected Components Workbench™ software • Three rotary dials to set Full Load Amps (FLA) • 8-position DIP switch for trip class and feature selection

Expansion Digital I/O

You can add up to four additional expansion digital modules to the E300/E200 relay expansion bus.

- 4 inputs/2 relay outputs
- 24V DC
- 120V AC
- 240V AC

The remote trip function lets an external device (such as a vibration sensor) induce am trip. External device relay contacts are wired to the discrete inputs. These discrete inputs are configurable with an option for assigning the remote trip function.

Expansion Analog I/O

The E300/E200 analog expansion module lets you protect against over-analog readings from analog-based sensors, such as overtemperature, overflow, or overpressure. The analog expansion module monitors resistance temperature detectors.

You can add up to four additional expansion analog modules to the E300/E200 relay expansion bus.

- 3 universal analog inputs/1 analog output
- 0...10V
- 0...5V
- 1...5V
- 0...20 mA
- 4...20 mA
- RTD (2-wire or 3-wire)
- 0...150 Ω
- 0...750 Ω
- 0...3000 Ω
- 0...6000 Ω (PTC/NTC)

Expansion Power Supply Features

When more than one expansion digital module and one operator station are added to the E300/E200 relay expansion bus, you need an expansion power supply to supplement power for the additional modules. One expansion power supply powers a fully loaded E300/E200 relay expansion bus.

- 120/240V AC
- 24V DC

Expansion Operator Station Features

You can add one operator station to the E300/E200 relay expansion bus to be used as a user interface device. The operator stations provide status indicators and function keys for motor control. The operator stations also support CopyCat™, which lets you upload and download configuration parameters. Using a Series B Control Module and Series B Control/Diagnostic station offers added functionality for the CopyCat feature by also allowing upload and download of any custom DeviceLogix programming.

- Control station
- Diagnostic station

External Current Transformer Options

For those motor overload protection applications greater than 200 A, external current transformers (CTs) can be used to step down the main operating current. This also provides isolation for high current conductors and the E300/E200 Overload Relay. There are different current ranges to select from and also different certification standards (for example, UL or CE) to which the respective CT kits conform.

- UL compliant CT types: 300 A and 600 A
- CE compliant CT types: 300 A and 400 A

Product Selection

This section provides catalog number explanations and product selection information for the E300/E200 overload relays and accessories.

Catalog Number Explanation

Examples given in this section are for reference purposes. This basic explanation should not be used for product selection; not all combinations will produce a valid catalog number.

Sensing Module

193	–	ESM	–	VIG	–	30A	–	C23
a		b		c		d		e

a	
Bulletin Number	
Code	**Description**
193	IEC Overload Relay
592	NEMA Overload Relay

b	
Module Type	
Code	**Description**
ESM	Sensing Module

c	
Sensing Module Type	
Code	**Description**
VIG	Current, Ground Fault Current, Voltage, and Power
IG	Current and Ground Fault Current
I	Current

d	
Sensing Current Range	
Code	**Description**
30A	0.5…30 A
60A	6…60 A
100A	10…100 A
200A	20…200 A

e	
Sensing Module Mounting Style	
Code	**Description**
C23	Mounts to 100-C09…-C23 Contactor. Can also be used for direct mount to Bulletin 300 NEMA contactors.
C55	Mounts to 100-C30…-C55 Contactor. Can also be used for direct mount to Bulletin 300 NEMA contactors.
C97	Mounts to 100-C60…-C97 Contactor. Can also be used for direct mount to Bulletin 300 NEMA contactors.
D180	Mounts to 100-D115…-D180 Contactor. Can also be used for direct mount to Bulletin 300 NEMA contactors.
E146	Mounts to 100-E116…-E146 Contactor
E205	Mounts to 100-E190…-E205 Contactor
S2	Mounts to Bulletin 500 NEMA Size 0…2 Contactor
S3	Mounts to Bulletin 500 NEMA Size 3 Contactor
S4	Mounts to Bulletin 500 NEMA Size 4 Contactor
T	DIN Rail / Panel Mount with Power Terminals
E3T	Replacement DIN Rail / Panel Mount with Power Terminals for an E3 Plus Panel Mount Adapter
P	DIN Rail / Panel Mount with Pass-thru Power Conductors
CT	DIN Rail / Panel Mount with Pass-thru Power Conductors and Voltage Sensing

Control Module

193	–	EIO	–	43	–	120
a		b		c		d

a	
Bulletin Number	
Code	**Description**
193	IEC Overload Relay
592	NEMA Overload Relay

b	
Module Type	
Code	**Description**
EIO	I/O Only Control Module
EIOGP(1)	I/O and Protection Control Module (External Ground Fault Sensing, and PTC)

c	
I/O Count	
Code	**Description**
63	6 Inputs / 3 Relay Outputs
43	4 Inputs / 3 Relay Outputs
42	4 Inputs / 2 Relay Outputs
22	2 Inputs / 2 Relay Outputs

d	
Control Voltage	
Code	**Description**
24D	24V DC
120	110…120V AC, 50/60 Hz
240	220…240V AC, 50/60 Hz

(1) Requires Core Balanced Ground Fault Sensor Cat. No. 193-CBCT_ for external ground fault protection. Sensing module with "G" not required.

Communication Module

193	–	ECM	–	ETR
a		b		c

a	
Bulletin Number	
Code	**Description**
193	IEC Overload Relay

b	
Module Type	
Code	**Description**
ECM	Communication Module

c	
Sensing Module Type	
Code	**Description**
ETR	EtherNet/IP with Dual Ethernet Ports
DNT	DeviceNet
PCM	Parameter Configuration Module (E200)

Digital Expansion Module

193	–	EXP	–	DIO	–	42	–	120
a		b		c		d		e

a	
Bulletin Number	
Code	**Description**
193	IEC Overload Relay

b	
Module Type	
Code	**Description**
EXP	Expansion Module

c	
I/O Type	
Code	**Description**
DIO	Digital I/O

d	
I/O Count	
Code	**Description**
42	4 Inputs / 2 Relay Outputs

e	
Communication Type	
Code	**Description**
120	110. . . 120V AC, 50/60 Hz Inputs
240	220. . . 240V AC, 50/60 Hz Inputs
24D	24V DC Inputs

Analog Expansion Module

193	–	EXP	–	AIO	–	31
a		b		c		d

a	
Bulletin Number	
Code	**Description**
193	IEC Overload Relay

b	
Module Type	
Code	**Description**
EXP	Expansion Module

c	
I/O Type	
Code	**Description**
AIO	Analog I/O

d	
I/O Count	
Code	**Description**
31	3 Universal Analog Inputs / 1 Analog Output

Operator Station

193	–	EOS	–	SCS
a		b		c

a	
Bulletin Number	
Code	**Description**
193	IEC Overload Relay

b	
Module Type	
Code	**Description**
EOS	Operator Station

c	
I/O Type	
Code	**Description**
SCS	Starter Control Station
SDS	Starter Diagnostic Station

Power Supply

193	–	EXP	–	PS	–	AC
a		b		c		d

a	
Bulletin Number	
Code	**Description**
193	IEC Overload Relay

b	
Module Type	
Code	**Description**
EXP	Expansion Module

c	
Function Type	
Code	**Description**
PS	Expansion Bus Power Supply

d	
Supply Voltage	
Code	**Description**
AC	110. . .240V AC, 50/60Hz control voltage
DC	24V DC control voltage

External Current Transformer

193	–	CT	–	UL	–	300A
a		b		c		d

a	
Bulletin Number	
Code	**Description**
193	IEC Overload Relay

b	
Module Type	
Code	**Description**
CT	Current Transformer

c	
Certification Type	
Code	**Description**
CE	CE Compliant
UL	UL Compliant

d	
Current Ratio(1)	
Code	**Description**
300	300:5 A
400	400:5 A
600	600:5 A

(1) You can also use Bulletin 1411 current transformers for different current ratios. See publication 1411-TD001 for more information.

Product Selection

NOTE: Your order must include 1) the Cat. No. of the sensing module, control module, and communication module selected, and 2)if required, Cat. No. of any accessories.

Sensing Modules

Description	Mounting Options	Current Range [A]	For Use With	Cat. No.
Current	IEC Contactors	0.5…30	100-C09…C23	193-ESM-I-30A-C23
			100-C30…C55	193-ESM-I-30A-C55
		6…60	100-C30…C55	193-ESM-I-60A-C55
		10…100	100-C60…100-C97	193-ESM-I-100A-C97
		20…200	100-D115…100-D180	193-ESM-I-200A-D180
			100-E116...100-E146	193-ESM-I-200A-E146
			100-E190...100-E205	193-ESM-I-200A-E205
	DIN Rail / Panel Mount Power Terminals	0.5…30	All contactors and external current transformers	193-ESM-I-30A-T
		6…60	All contactors	193-ESM-I-60A-T
		10…100		193-ESM-I-100A-T
		20…200	All contactors	193-ESM-I-200A-T
	DIN Rail / Panel Mount Power Terminals Directly replaces 193-ECPM_	0.5…30	All contactors and external current transformers.	193-ESM-I-30A-E3T
		6…60	All contactors	193-ESM-I-60A-E3T
		10…100		193-ESM-I-100A-E3T
	DIN Rail / Panel Mount Pass-thru	0.5…30	All contactors and external current transformers	193-ESM-I-30A-P
		6…60	All contactors	193-ESM-I-60A-P
		10…100		193-ESM-I-100A-P
		20…200		193-ESM-I-200A-P
	Bulletin 500 NEMA Contactors	0.5…30	NEMA Size 0…2	592-ESM-I-30A-S2
		6…60		592-ESM-I-60A-S2
		10…100	NEMA Size 3	592-ESM-I-100A-S3
		20…200	NEMA Size 4	592-ESM-I-200A-S4
	Bulletin 300 NEMA Contactors	0.5…30	300-A0_ Series C ,NEMA Size 0	193-ESM-I-30A-C23
			300-A0_ Series B, NEMA Size 0 300-B0_ Series B, NEMA Size 1	193-ESM-I-30A-C55
		6…60	300-C0_ Series C, NEMA Size 2	193-ESM-I-60A-C55
		10…100	300-C0_ Series B, NEMA Size 2 300-D0_ Series D, NEMA Size 3	193-ESM-I-100A-C97
		20…200	300-D0_ Series C, NEMA Size 3 300-E0_ Series B/C, NEMA Size 4	193-ESM-I-200A-D180
		N/A	300-F0_ Series A/B/C NEMA Size 5	193-ESM-I-30A-T(1)

(1) Requires 193-CT-_-300A external CT kit.

Description	Mounting Options	Current Range [A]	For Use With	Cat. No.
Current/Ground Fault	IEC Contactors	0.5…30	100-C09…C23	193-ESM-IG-30A-C23
			100-C30…C55	193-ESM-IG-30A-C55
		6…60	100-C30…C55	193-ESM-IG-60A-C55
		10…100	100-C60…100-C97	193-ESM-IG-100A-C97
		20…200	100-D115…100-D180	193-ESM-IG-200A-D180
			100-E116...100-E146	193-ESM-IG-200A-E146
			100-E190...100-E205	193-ESM-IG-200A-E205
	DIN Rail / Panel Mount Power Terminals	0.5…30	All contactors	193-ESM-IG-30A-T
		6…60		193-ESM-IG-60A-T
		10…100		193-ESM-IG-100A-T
		20…200		193-ESM-IG-200A-T
	DIN Rail / Panel Mount Power Terminals Directly replaces 193-ECPM_	0.5…30		193-ESM-IG-30A-E3T
		6…60		193-ESM-IG-60A-E3T
		10…100		193-ESM-IG-100A-E3T
	DIN Rail / Panel Mount Pass-thru	0.5…30		193-ESM-IG-30A-P
		6…60		193-ESM-IG-60A-P
		10…100		193-ESM-IG-100A-P
		20…200		193-ESM-IG-200A-P
	Bulletin 500 NEMA Contactors	0.5…30	NEMA Size 0…2	592-ESM-IG-30A-S2
		6…60		592-ESM-IG-60A-S2
		10…100	NEMA Size 3	592-ESM-IG-100A-S3
		20…200	NEMA Size 4	592-ESM-IG-200A-S4
	Bulletin 300 NEMA Contactors	0.5…30	300-A0_ Series C, NEMA Size 0	193-ESM-IG-30A-C23
			300-A0_ Series B, NEMA Size 0 300-B0_ Series B, NEMA Size 1	193-ESM-IG-30A-C55
		6…60	300-C0_ Series C, NEMA Size 2	193-ESM-IG-60A-C55
		10…100	300-C0_ Series B, NEMA Size 2 300-D0_ Series D, NEMA Size 3	193-ESM-IG-100A-C97
		20…200	300-D0_ Series C, NEMA Size 3 300-E0_ Series B/C, NEMA Size 4	193-ESM-IG-200A-D180(1)
		—	300-F0_ Series A/B/C, NEMA Size 5	193-ESM-IG-30A-T(1)

(1) Requires 193-CT-_-300A external CT kit.

Description	Mounting Options	Current Range [A]	For Use With	Cat. No.
Voltage/Current/Ground Fault	IEC Contactors	0.5…30	100-C09…C23	193-ESM-VIG-30A-C23
			100-C30…C55	193-ESM-VIG-30A-C55
		6…60	100-C30…C55	193-ESM-VIG-60A-C55
		10…100	100-C60…100-C97	193-ESM-VIG-100A-C97
		20…200	100-D115…100-D180	193-ESM-VIG-200A-D180
			100-E116...100-E146	193-ESM-VIG-200A-E146
			100-E190...100-E205	193-ESM-VIG-200A-E205
	DIN Rail / Panel Mount Power Terminals	0.5…30	All contactors	193-ESM-VIG-30A-T
		6…60		193-ESM-VIG-60A-T
		10…100		193-ESM-VIG-100A-T
		20…200		193-ESM-VIG-200A-T
	DIN Rail / Panel Mount Power Terminals Directly replaces 193-ECPM_	0.5…30		193-ESM-VIG-30A-E3T
		6…60		193-ESM-VIG-60A-E3T
		10…100		193-ESM-VIG-100A-E3T
	DIN Rail / Panel Mount Pass-thru	0.5…30	External current and potential transformers	193-ESM-VIG-30A-CT
	Bulletin 500 NEMA Contactors	0.5…30	NEMA Size 0…2	592-ESM-VIG-30A-S2
		6…60		592-ESM-VIG-60A-S2
		10…100	NEMA Size 3	592-ESM-VIG-100A-S3
		20…200	NEMA Size 4	592-ESM-VIG-200A-S4
	Bulletin 300 NEMA Contactors	0.5…30	300-A0_ Series C, NEMA Size 0	193-ESM-VIG-30A-C23
			300-A0_ Series B, NEMA Size 0 300-B0_ Series B, NEMA Size 1	193-ESM-VIG-30A-C55
		6…60	300-C0_ Series C, NEMA Size 2	193-ESM-VIG-60A-C55
		10…100	300-C0_ Series B, NEMA Size 2 300-D0_ Series D, NEMA Size 3	193-ESM-VIG-100A-C97
		20…200	300-D0_ Series C, NEMA Size 3 300-E0_ Series B/C, NEMA Size 4	193-ESM-VIG-200A-D180
		N/A	300-F0_ Series A/B/C, NEMA Size 5	193-ESM-VIG-30A-T(1)

(1) Requires 193-CT-_-300A external CT kit.

Control Modules

Description	No. of Inputs/Outputs	Rated Control Voltage [V]	Cat. No.
I/O Module	6 in/3 out	24V DC	193-EIO-63-24D
	2 in/2 out		193-EIO-22-24D
	4 in/3 out	110…120V AC, 50/60 Hz	193-EIO-43-120
	2 in/2 out		193-EIO-22-120
	4 in/3 out	220…240V AC, 50/60 Hz	193-EIO-43-240
	2 in/2 out		193-EIO-22-240
I/O and Protection Module Thermistor (PTC) and External Ground Fault Current(1)	4 in/2 out	24V DC	193-EIOGP-42-24D
	2 in/2 out	110…120V AC, 50/60 Hz	193-EIOGP-22-120
	2 in/2 out	220…240V AC, 50/60 Hz	193-EIOGP-22-240

(1) Requires Core Balanced Ground Fault Sensor Cat. No. 193-CBCT_.

Communication Modules

Description	Cat. No.
EtherNet/IP	193-ECM-ETR
DeviceNet	193-ECM-DNT
Parameter Configuration Module (E200)	193-ECM-PCM

Expansion Modules

Description	No. of Inputs/Outputs	Rated Control Voltage [V]	Cat. No.
Digital Expansion Module, 24V DC	4 in/2 out	24V DC	193-EXP-DIO-42-24D
Digital Expansion Module, 120V AC	4 in/2 out	110…120V AC, 50/60 Hz	193-EXP-DIO-42-120
Digital Expansion Module, 240V AC	4 in/2 out	220…240V AC, 50/60 Hz	193-EXP-DIO-42-240
Analog Expansion Module: mA, V, RTD, and Resistance	3 universal in/1 out	—	193-EXP-AIO-31 (1)
Expansion Power Supply	—	24V DC	193-EXP-PS-DC
		110…240V AC, 50/60 Hz	193-EXP-PS-AC
Starter Control Station with 3-Meter Cable	—	—	193-EOS-SCS
Starter Diagnostic Station with 3-Meter Cable	—	—	193-EOS-SDS (1)

(1) Module requires control module firmware v3.000 or higher.

Accessories

Description	For Use With	Pkg. Qty.	Cat. No.
Contactor Coil Module	100-C09…100-C23 contactors	1	193-EIO-CM-C23
	100-C30…100-C55 contactors		193-EIO-CM-C55
	100-C60…100-C97 contactors		193-EIO-CM-C97
1-Meter Expansion Module Cable	—	1	193-EXP-CBL-1M
3-Meter Expansion Module Cable	—	1	193-EXP-CBL-3M
Core Balanced Ground Fault Sensor(1)	193-EIOGP-42-24D 193-EIOGP-22-120 193-EIOGP-22-240 193/592-ESM-IG-_-_ 193/592-ESM-VIG-_-_	1	193-CBCT1 193-CBCT2 193-CBCT3 193-CBCT4

(1) Requires control module with "GP" for internal ground fault protection or sensing module with "G", but not both.

Description	For Use With	Pkg. Qty.	Cat. No.
Replacement Connectors	193-EIO-63-24D	1	193-NCIO-63-CNT
	193-EIO-43-120		193-NCIO-43-CNT
	193-EIO-43-240		
	193-EIOGP-42-24D		193-NCIOGP-42-CNT
	193-EIOGP-22-120		193-NCIOGP-22-CNT
	193-EIOGP-22-240		
	193-ESM-VIG-30A-CT		193-NCSM-VIG-CNT
	193-EXP-DIO-42-24D		193-NCXP-DIO-CNT(1)
	193-EXP-DIO-42-120		
	193-EXP-DIO-42-240		
	193-EXP-AIO-31		193-NCXP-AIO-CNT(1)
	193-EXP-PS-DC		193-NCXP-PS-CNT(1)
	193-EXP-PS-AC		
	193-ECM-DNT		193-NCCM-DNT-CNT

Description			For Use With	Pkg. Qty.	Cat. No.
Panel Mount Screw Adapters			193-ESM-I-30A-T	1	140M-C-N45[2]
			193-ESM-I-60A-T		
			193-ESM-IG-30A-T		
			193-ESM-IG-60A-T		
			193-ESM-VIG-30A-T		
			193-ESM-VIG-60A-T		
			193-ESM-I-30A-P		
			193-ESM-I-60A-P		
			193-ESM-IG-30A-P		
			193-ESM-IG-60A-P		
			193-ESM-VIG-30A-CT		
			193-ESM-I-100A-T		193-ESM-SA-100[3]
			193-ESM-IG-100A-T		
			193-ESM-VIG-100A-T		
			193-ESM-I-100A-P		
			193-ESM-IG-100A-P		
External Current Transformers	CE Certified	Current Ratio: 300:5 A	193-ESM-I-30A-E3T 193-ESM-I-30A-T 193-ESM-I-30A-P 193-ESM-IG-30A-E3T 193-ESM-IG-30A-T 193-ESM-IG-30A-P 193-ESM-VIG-30A-CT	3	193-CT-CE-300A
		Current Ratio: 400:5 A			193-CT-CE-400A
	UL Certified	Current Ratio: 300:5 A			193-CT-UL-300A
		Current Ratio: 600:5 A			193-CT-UL-600A

(1) Supplied with 20 cm expansion bus cable and connectors.
(2) Sold in multiples of 10. Order quantity of 10 to receive a package of 10 pieces.
(3) Sold in multiples of 10. Order quantity of 1 to receive a package of 10 pieces.

Description	For Use With	Cat. No.
Load Side Terminal Cover	193-ESM-I-200A-D180	193-ESM-TCT-200
	193-ESM-I-200A-T	
	193-ESM-I-200A-E146	
	193-ESM-I-200A-E205	
	193-ESM-IG-200A-D180	
	193-ESM-IG-200A-T	
	193-ESM-IG-200A-E146	
	193-ESM-IG-200A-E205	
	193-ESM-VIG-200A-D180	
	193-ESM-VIG-200A-T	
	193-ESM-VIG-200A-E146	
	193-ESM-VIG-200A-E205	
Contactor Terminal Cover	193-ESM-I-200A-D180	193-ESM-TC-D180
	193-ESM-IG-200A-D180	
	193-ESM-VIG-200A-D180	
Line Side Terminal Cover	193-ESM-I-200A-T	193-ESM-TCT-200
	193-ESM-IG-200A-T	
	193-ESM-VIG-200A-T	

Description		For Use With	Cat. No.
EtherNet/IP Communications Auxiliary • DeviceNet to EtherNet/IP linking device	Single Port	193-ECM-DNT	193-DNENCAT
	Dual Port	193-ECM-DNT	193-DNENCATR
DeviceNet Configuration Terminal • Provides interface with objects on DeviceNet		193-ECM-DNT	193-DNCT
USB to DeviceNet Adapter • Provides USB to DeviceNet computer interface		193-ECM-DNT	1784-U2DN
USB to Ethernet Adapter • Provides USB to Ethernet computer interface		193-ECM-ETR	9300-USBE

Specifications

Wiring Diagrams

Figure 1 - Control Module

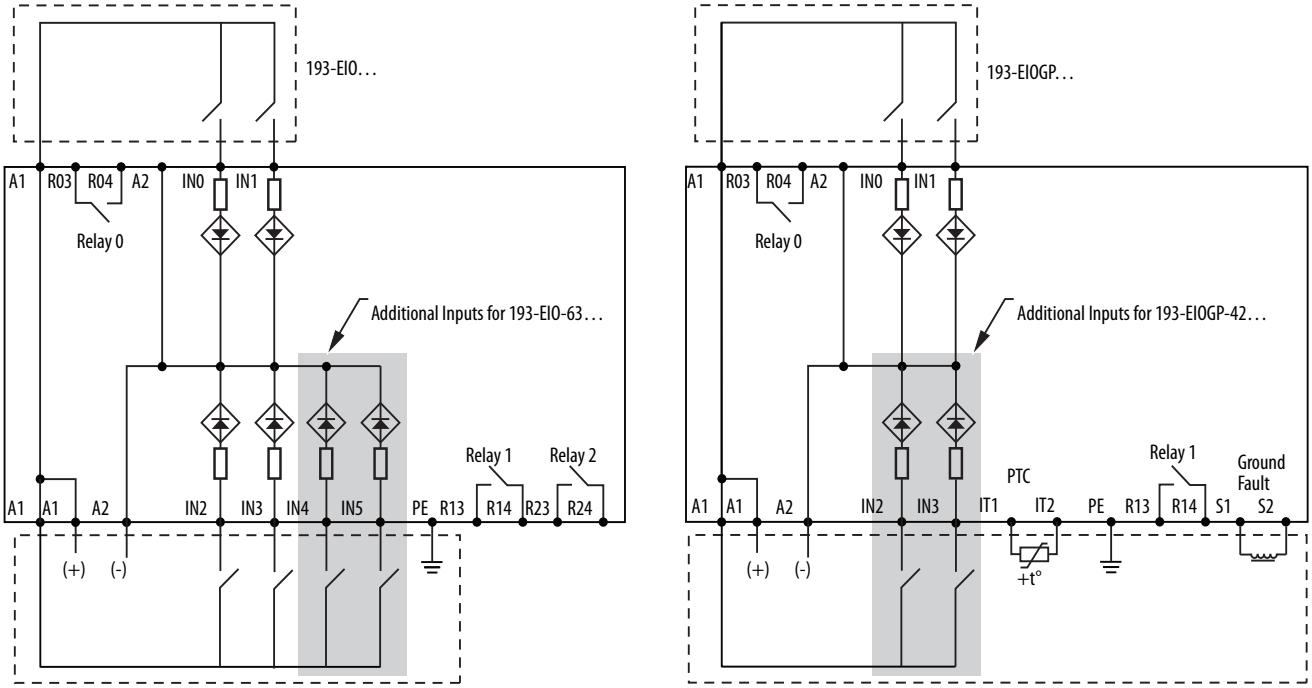

Figure 2 - Expansion Digital I/O Modules 193-EXP-DIO-___

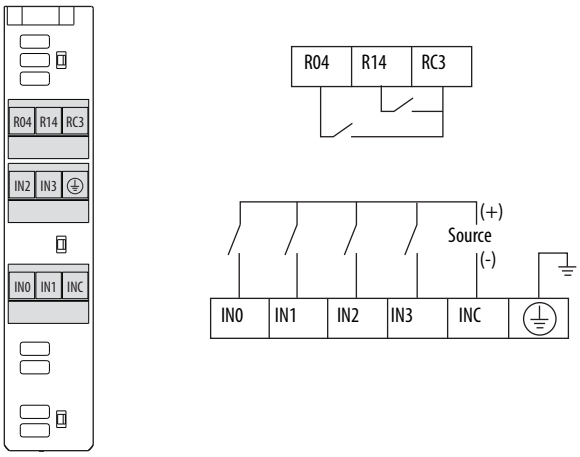

Figure 3 - Expansion Analog I/O Module 193-EXP-AIO-31

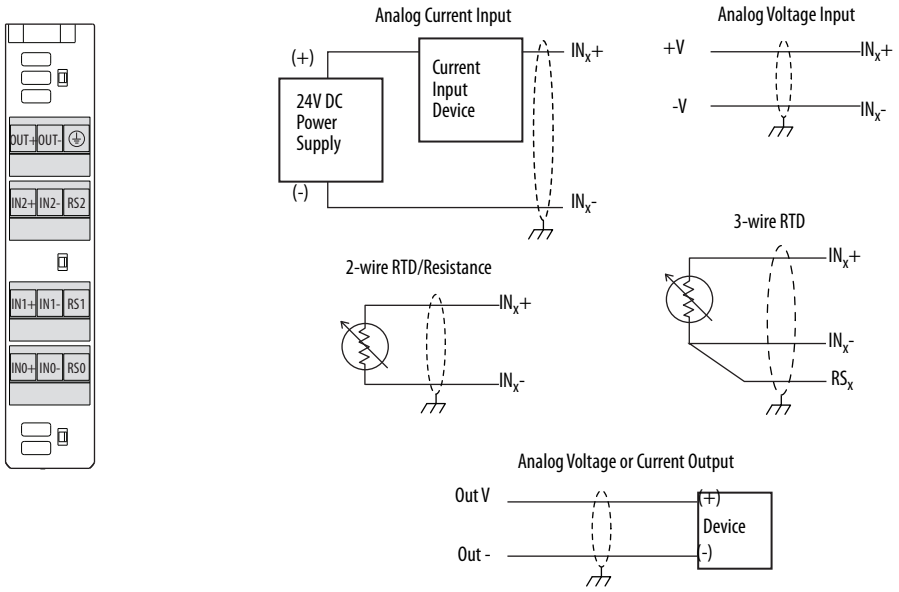

Figure 4 - Expansion Power Supplies 193-EXP-PS-__

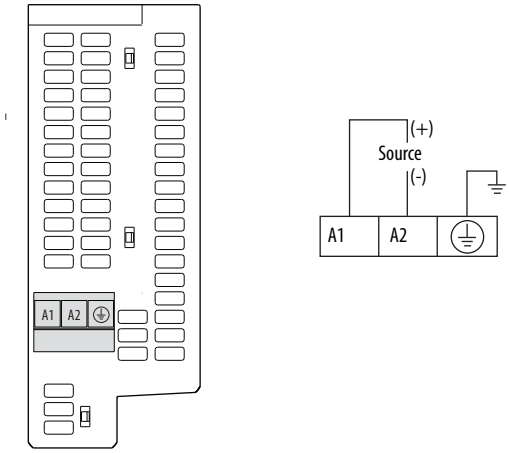

Figure 5 - External Current Transformers 193-CT-__

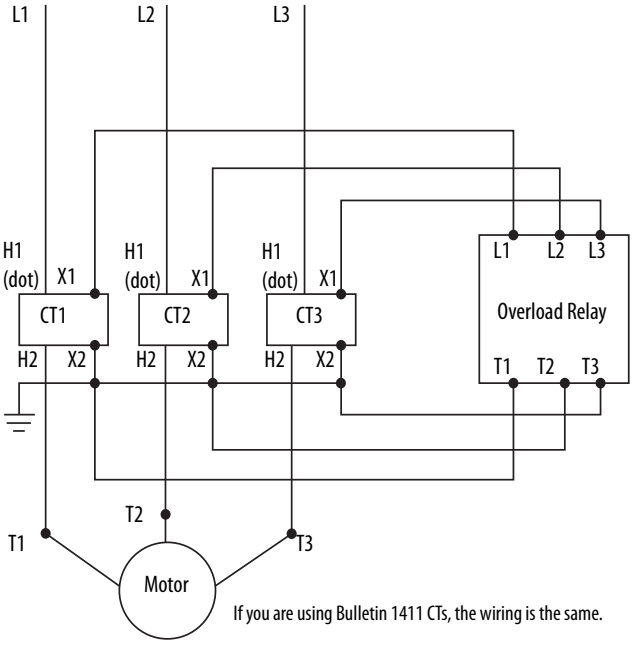

Table 1 - Standards Compliance and Certifications

Standards Compliance	Certifications
CSA22.2, No. 60947-4-1	cULus Listed - File No. E14840; Guide Nos. NKCR, NKCR7
EN 60947-4-1	CE Marked
UL 60947-4-1	RCM (formerly C-tick)
GB/T 14048.4-2010	ABS
IEC 61508	CCC
IEC 61511	KCC
SJ/T 11364, GB/T 26572, SJ/Z 11388	Suitable for use with IE3 Motors (IEC 60034-30)
	SIL 2 Capable - IEC 61508:2010 Parts 1-7 (with Series B Control Module Only)
	Environmental Protection Use Period 25 (China RoHS)

Electrical Specifications

Table 2 - Motor/Load Ratings

Attribute	Rating
Terminals	1/L1, 3/L2, 5/L3, 2/T1, 4/T2, 6/T3
Terminal Style Devices	
Rated Insulation Voltage U_i	690V AC
Rated Operating Voltage U_e, IEC	690V AC
Rated Operating Voltage U_e, UL	690V AC
Pass-thru Style Devices	
Rated Insulation Voltage U_i	1000V AC
Rated Operating Voltage U_e, IEC	1000V AC
Rated Operating Voltage U_e, UL	1000V AC
Rated Impulse Voltage (U_{imp})	6 kV
Rated Operating Current I_e	See product selection table
Rated Frequency	45…65 Hz(1)

(1) Exception: Any E300/E200 Overload Relay that uses an external ground fault sensor is limited to 50/60 Hz detection.

Table 3 - Control Module Power Supply Ratings

Attribute		Rating		
Rated Supply Voltage (U_s)		24V DC	120V AC	240V AC
Operating Range		11…30V DC	85…132V AC	159…265V AC
Maximum Inrush Current		3 A for 30 ms	10 A for 1 ms	8 A for 3 ms
Maximum Power Consumption	E300/E200	6 W		
	E300/E200 with expansion	8 W		
Maximum Power Interruption Time	V_{min}	5 ms	10 ms	10 ms
	V_{max}	5 ms	10 ms	10 ms

Table 4 - Output Relay Ratings (Control Module and Expansion Digital Module)

Attribute	Rating
Relay 0:	R03/R04
Relay 1:	R13/R14
Relay 2:	R23/R24
Type of Contacts	Form A SPST - NO
Rated Thermal Current (I_{the})	5 A
Rated Insulation Voltage (U_i)	300V AC
Rated Operating Voltage (U_e)	250V AC
Rated Operating Current (I_e)	3 A (@120V AC), 1.5 A (@240V AC)
	0.25 A (@110V DC), 0.1 A (@220V DC)
Minimum Operating Current	10 mA @ 5V DC
Rating Designation	B300
Utilization Category	AC-15
Resistive Load Rating (p.f. = 1.0)	5 A, 250V AC/5 A, 30V DC
Inductive Load Rating (p.f. = 0.4) (L/R = 7 ms)	2 A, 250V AC/2 A, 30V DC
Short Circuit Current Rating	1,000 A
Recommended Control Circuit Fuse	KTK-R-6 (6 A, 600 V)
Rated Number of Operations	
Relay 0, Relay 1, and Relay 2:	
W/100-C09…100-C55	5,000,000
W/100-C60…100-C97	2,500,000
W/NEMA Size 0…2	1,000,000
W/NEMA Size 3	300,000

Table 5 - Input Ratings (Control Module and Expansion Digital Module)

Attribute	Rating		
Input 0: Input 1: Input 2: Input 3: Input 4: Input 5:	IN0 IN1 IN2 IN3 IN4 IN5		
Supply Voltage	24V DC	120V AC	240V AC
Type of Inputs	Current Sinking		
On-State Voltage	11V DC	74V AC	159V AC
On-State Current (turn-on)	2 mA	5 mA	5 mA
Off-State Voltage	5V DC	20V AC	40V AC
Off-State Current	1.5 mA	2.5 mA	2.5 mA
Transition Voltage	5...11V DC	20…74V AC	40…159V AC
Transition Current	1.5...2.0 mA	2.5…5 mA	2.5…5 mA

Table 6 - Analog I/O Ratings (Expansion Analog Module)

Module		
Bus to In/Out isolation		1000V AC = 1415V DC (1 min.)
Group Isolation (In/Out)		1000V AC = 1415V DC (1 min.)
Channel to channel isolation		None
Max. current draw		85 mA at 24V
Max. Surge Current at Power-Up		0.5 A @ 24V DC for 1 ms
Input Channels		
Input ranges	Current	0…20 mA, 4…20 mA
	Voltage	0…10V, 1…5V, 0…5V
	RTD	100 Ω, 200 Ω, 500 Ω and 1000 Ω PT385 and Pt3916, 100 Ω Ni618 and Ni672, 10 Ω Cu 426, 604 Ω NiFe 518
	Resistance	0-150 Ω, 0-750 Ω, 0-3000 Ω, 0-6000 Ω
Input Impedance Tolerances	Current	249 Ω ± 1.0%
	Voltage	10M at $10V_{in}$ 4M at $5V_{in}$ 680k at $1V_{in}$
Input resolution		12 bits
Output Channels		
Output ranges	Current	0…20 mA, 4…20 mA
	Voltage	0…10V, 0…5V, 1…5V
Output Resolution		12 bits
Voltage Output Load		2k Ω min. at 10V output (5 mA max.), including wire resistance
Current Output Load		50 …750 Ω max
Output Impedance	Current	1MΩ
	Voltage	<1 Ω
Output Open Circuit detect	Current	O.C. detect supported
	Voltage	O.C. detect not supported
Max Inductive Load (current outputs)		0.1 mH
Max Capacitive Load (voltage outputs)		1μF

Table 7 - Thermistor/PTC Input Ratings (PTC only)

Attribute	Rating
Terminals	IT1, IT2
Type of Control Unit	Mark A
Maximum Number of Sensors	6
Maximum Cold Resistance of PTC Sensor Chain	1500 Ω
Trip Resistance	3400 Ω ± 150 Ω
Reset Resistance	1600 Ω ± 100 Ω
Short-circuit Trip Resistance	25 Ω ± 10 Ω
Maximum Voltage @ PTC Terminals (R_{PTC} = 4 kΩ)	7.5V DC
Maximum Voltage @ PTC Terminals (R_{PTC} =open)	30V DC
Response Time	800 ms

Low Voltage Directive

The E300/E200 Electronic Overload Relay expansion digital modules are tested to comply with EN60947-5-1 Low-voltage switchgear and controlgear Part 5-1: Control circuit devices and switching elements.

Table 8 - Expansion Digital I/O Modules

Expansion Digital I/O Modules	193-EXP-DIO-42		
	24D	120	240
Digital Output Rated Operational Voltage (U_e)	250V AC	250V AC	250V AC
Digital Output Rated Insulation Voltage (U_i)	$2000V_{rms}$ for 1 s		
Rated Impulse Withstand Voltage (U_{imp})	NA		
Conditional Short-Circuit Current	1000 A	1000 A	1000 A
Recommended Control Circuit Fuse	KTK-R (6 A, 600V)		
Utilization Category	AC15, DC13		
Pollution Degree	3		

Table 9 - Expansion Power Supply Modules

Expansion Digital I/O Modules	193-EXP-PS-AC	193-EXP-PS-DC
Rated Operational Voltage (U_e)	100…250V AC	21.6…26.4V DC
Rated Insulation Voltage (U_i)	$2640V_{rms}$ for 1 s	500V for 60s
Rated Impulse Withstand Voltage (U_{imp})	4 kV	0.5 kV
Conditional Short-Circuit Current	NA	NA
Protection against Short Circuits	NA	NA
Utilization Category	NA	NA
Pollution Degree	3	3

Table 10 - Communication Modules

Communication Module	Max. Current Consumption
193-ECM-DNT	50 mA at 24V DC

Environmental Specifications

Note: The E300/E200 Electronic Overload Relay expansion power supplies (Cat. Nos. 193-EXP-PS-AC and 193-EXP-PS-DC) surrounding air temperature must not exceed 55 °C (131 °F).

Attribute	Rating
Ambient Temperature	
Storage	–40…+85 °C (–40…+185 °F)
Operating (open)	–20…+55 °C (–4…+131 °F)
Operating (enclosed)	–20…+40 °C (–4…+104 °F)
Humidity	
Operating	5…95% Non-condensing
Damp Heat – Steady State (per IEC 68-2-3)	92% r.h., 40 °C (104 °F), 56 days
Damp Heat – Cyclic (per IEC 68-2-30)	93% r.h., 25 °C/40 °C (77 °F/104 °F), 21 Cycles
Cooling Method	Natural convection
Vibration (per IEC 68-2-6)	2.5 G operating, 5 G non-operating
Shock (per IEC 68-2-27)	30 G
Maximum Altitude	2000 m(1)
Pollution Environment	Pollution Degree 3
Terminal Marking	EN 50012
Degree of Protection	IP20

(1) Exception: Any E300/E200 Overload Relay that uses an external ground fault sensor is limited to 50/60 Hz detection.

Electromagnetic Compatibility Specifications

Attribute	Rating
Electrostatic Discharge Immunity	
Test Level	8kV Air Discharge, 6kV Contact Discharge
Performance Criteria	1(1)(2)
Radio Frequency Immunity	
Test Level	10V/m
Performance Criteria	1(1)(2)
Electrical Fast Transient/Burst Immunity	
Test Level	4kV (Power), 2kV (Control & Comm)
Performance Criteria	1(1)(2)
Surge Immunity	
Test Level	2kV (L-E), 1kV (L-L)
Performance Criteria	1(1)(2)
Radiated Emissions	Class A
Conducted Emissions	Class A

(1) Performance Criteria 1 requires the DUT to experience no degradation or loss of performance
(2) Environment 2

Protection

Table 11 - General Protection

Protection Type	Trip	Warning
Overload	Yes	Yes
Phase Loss	Yes	No
Ground Fault	Yes	Yes
Stall	Yes	No
Jam	Yes	Yes
Underload	Yes	Yes
Thermistor (PTC)	Yes	Yes
Current Imbalance	Yes	Yes
Remote Trip	Yes	No
Blocked Start/Start Inhibit	Yes	No
Under Voltage L-L	Yes	Yes
Over Voltage L-L	Yes	Yes
Voltage Unbalance	Yes	Yes
Phase Rotation	Yes	Yes
Under Frequency	Yes	Yes
Over Frequency	Yes	Yes
Under Real Power (kW)	Yes	Yes
Over Real Power (kW)	Yes	Yes
Under Reactive Power Consumed (+kVAR)	Yes	Yes
Over Reactive Power Consumed (+kVAR)	Yes	Yes
Under Reactive Power Generated (-kVAR)	Yes	Yes
Over Reactive Power Generated (-kVAR)	Yes	Yes
Under Apparent Power (kVA)	Yes	Yes
Over Apparent Power (kVA)	Yes	Yes
Under Power Factor Lagging (-PF)	Yes	Yes
Over Power Factor Lagging (-PF)	Yes	Yes
Under Power Factor Leading (+PF)	Yes	Yes
Over Power Factor Leading (+PF)	Yes	Yes
Power Value Overflow (kW, kVAR or KVA)	Yes	Yes
Over Analog	Yes	Yes

Table 12 - Overload Protection

Attribute	Rating
Type of Relay	Ambient Compensated Time-Delay Phase Loss Sensitive
Nature of Relay	Solid-State
FLA Setting	See user manual
Trip Rating	120% FLA
Trip Class	5…30
Reset Mode	Automatic or Manual
Overload Reset Level	1…100% TCU

Table 13 - Ground Fault Protection

Attribute	Rating
Type	Core Balanced
Intended Use	Equipment Protection
Classification (Per UL 1053)	Class I and Class II
External Protection Range	20…100 mA
	100…500 mA
	200 mA…1.0 A
	1.0…5.0 A
Internal Protection Range	0.5…5.0 A
Trip & Warning Time Delay	0.1…25.0 s
Protection Inhibit Time	0…250 s

Accuracy

Table 14 - Metering

Attribute	Rating
Current	±2% of Sensing Module Current Range
Ground Fault Current	±5% of Full Scale
Voltage	±2% of Sensing Module Voltage Range
Power	±5% of Sensing Module Current and Voltage Range

Protection Timers

All E300/E200 Electronic Overload Relay trip timers have a resolution of ±0.1 s or 0.1 s/25 s (whichever is greater).

Product Safety Information

This section provides information necessary to design, install, verify, and maintain a Safety Instrumented Function (SIF) utilizing the E300/E200 Electronic Overload Relay. This section provides necessary requirements for meeting the IEC 61508 or IEC 61511 functional safety standards.

Device Description

The E300/E200 Electronic Overload Relay is a microprocessor-based electronic overload relay that is designed to help protect three-phase or single-phase AC electric induction motors that are rated from 0.5 A to 65,000 A. See the E300 User Manual, publication 193-UM015, for a full description of the E300/E200 relay installation and maintenance procedures.

Safety Function

The E300/E200 Electronic Overload relay will properly turn on and monitor the electric current that is drawn by an electric motor. Any E300/E200 output relay configured as a "Trip Relay" will be in a closed position until a Trip event occurs, which will force the relay into an open state. Any E300/E200 output relay configured as a "Control Relay" will allow a communication network or internal DeviceLogix engine to control the relay until a Trip event occurs, which will force the relay into an open state. The E300/E200 overload relay will remain in a Tripped state, and the output relays configured as a Trip or Control relay will remain in an open state until a Trip Reset command is received via an embedded reset button, hardwired input, DeviceLogix command, Web Server command, or network command.

The E300/E200 Electronic Overload relay is intended to be part of a final element subsystem as defined per IEC 61508 and the achieved Safety Integrity Level (SIL) of the designed function must be verified by the designer. All automatic diagnostics that detect failures of the E300/E200 relay are run periodically and detect product faults within a diagnostic test interval of 300 ms. If a diagnostic test does not pass, a trip event occurs and the E300/E200 relay goes into a Tripped state. In the Tripped state, the MS LED illuminates in a solid red color, indicating that there was an unrecoverable fault, and the Trip/Warn LED blinks a red pattern that indicates the reason for the trip event. The end user is responsible for replacing the E300/E200 relay when a diagnostic test does not pass.

Environmental Limits

The designer of an SIF must check that the product is rated for use within the expected environmental limits. See page 20 for more information.

Application Limits

It is especially important that the designer check for material compatibility considering on-site chemical contaminants and air supply conditions. If the E300/E200 relay is used outside of the application limits or with incompatible materials, the reliability data provided becomes invalid.

Design Verification

A detailed Failure Mode, Effects, and Diagnostics Analysis (FMEDA) report is available from Rockwell Automation. This report details all failure rates and failure modes as well as the expected lifetime.

The achieved SIL of an entire SIF design must be verified by the designer via a calculation of PFDavg considering architecture, proof test interval, proof test effectiveness, any automatic diagnostics, average repair time, and the specific failure rates of all products included in the SIF. Each subsystem must be checked to ensure compliance with minimum hardware fault tolerance (HFT) requirements.

When using E300/E200 relay in a redundant configuration, a common cause factor of at least 5% should be included in safety integrity calculations. The failure rate data listed the FMEDA report is only valid for the useful life time of the E300/E200 relay. The failure rates will increase after this time period. Reliability calculations based on the data listed in the FMEDA report for mission times beyond the lifetime may yield results that are too optimistic, that is, the calculated SIL will not be achieved.

Systematic Integrity

The product has met manufacturer design process requirements of SIL 2. These are intended to achieve sufficient integrity against systematic errors of design by the manufacturer. A SIF designed with this product must not be used at a SIL higher than the statement without “prior use” justification by end user or diverse technology redundancy in the design.

Random Integrity

The E300/E200 relay is a Type B Device. Therefore, based on compliance with IEC 61508 Route 2H requirements, when it is used as the only component in a final element subassembly, in a low demand application, a design can meet SIL 2 @ HFT=0.

When the final element assembly consists of many components (this device, actuator, solenoid, quick exhaust valve, etc.) the SIL must be verified for the entire assembly using failure rates from all components. This analysis must account for any hardware fault tolerance and architecture constraints.

ATTENTION: Use only appropriate components or devices that comply with relevant safety standards that correspond to the required safety category and safety integrity level.

- Conformity to requirements of the safety category and safety integrity level must be determined for the entire system.
- We recommend that you consult a certification body regarding assessment of conformity to the required safety integrity level or safety category.

You are responsible for confirming compliance with the applicable standards for the entire system.

Connection of the E300/E200 Electronic Overload Relay to the SIS Logic-solver

The device shall be connected to a safety rated logic solver which actively performs the safety function as well as the automatic diagnostics designed to diagnose potentially dangerous failures within the SIF.

General Requirements

The system’s response time shall be less than process safety time. The device will move to its safe state in less than 100 milliseconds under specified conditions.

All SIS components including the E300/E200 relay must be operational before process startup.

User shall verify that the E300/E200 relay is suitable for use in safety applications by confirming that the E300/E200 relay nameplates are properly marked.

Personnel performing installation, operation, maintenance and testing on the E300/E200 relay shall be competent to do so.

Results from the proof tests shall be recorded and reviewed periodically. The useful life of the E300/E200 relay is discussed in the Failure Modes, Effects, and Diagnostic Analysis Report.

Security

The E300/E200 relay has deployed some security mechanisms to assist in the resiliency to cybersecurity attacks. The E300/E200 overload relay has a security policy feature that is described in the E300 User Manual, publication 193-UM015.

The embedded Web Server of the E300/E200 relay is turned off by default, and it involves a physically lengthy process to enable it. Once the Web Server is enabled, the user must set a unique password the first time the user accesses its web page. This process is described in the E300 User Manual, publication 193-UM015.

Any time that the E300/E200 relay is actively protecting a running motor, or when a Logix Controller has a Class 1 EtherNet/IP connection established with Automatic Device Configuration enabled, the E300/E200 relay also prevents users from making random configuration changes or updating firmware.

The E300/E200 relay firmware files are encrypted and need a digital signature to allow them to be installed and executed in the relay. The E300/E200 relay uses trusted binaries for its firmware files; this prevents users from executing malicious firmware files in the device.

Installation and Commissioning

Installation

The E300/E200 relay must be installed per standard practices outlined in the E300 User Manual, publication 193-UM015. The environment must be checked to verify that environmental conditions do not exceed the specified ratings. The E300/E200 relay must be accessible for physical inspection.

While the product documentation identifies the means to do so, user updates of the software are not permitted for this product when used in functional safety applications. If a software update is required, the product must be updated by Rockwell Automation.

Physical Location and Placement

The E300/E200 relay shall be accessible with sufficient room for electric wiring connections and shall allow manual proof testing.

The E300/E200 relay shall be mounted in a vibration environment that does not exceed the limitations specified on page 20.

Operation and Maintenance

Proof test without automatic testing

The objective of proof testing is to detect failures within the E300/E200 Electronic Overload Relay that are not detected by any automatic diagnostics of the system. The primary concern is undetected failures that prevent the safety instrumented function from performing its intended function.

The frequency of proof testing, or the proof test interval, is to be determined in reliability calculations for the safety instrumented functions using the E300/E200 Electronic Overload Relay. The proof tests must be performed more frequently than, or as frequently as specified in the calculation in order to maintain the required safety integrity of the safety instrumented function.

Table 15 outlines the recommended proof test. The results of the proof test should be recorded and any failures that are detected and that compromise functional safety should be reported to Rockwell Automation.

This test will detect >95% of possible DU failures in the E300/E200 Electronic Overload Relay for stopping an electric motor when in a Tripped state.

IMPORTANT The person(s) performing the proof test of the E300/E200 Electronic Overload Relay should be trained in SIS operations, have the appropriate qualifications and personal protection needed to execute this proof test, and have the proper training for maintenance and company MOC procedures. No special tools are required.

Table 15 - Recommended Proof Test

Step	Action
1	Verify that the electric motor being monitored by the E300/E200 relay, and the process in which the motor is used, can be put safely into a safe state.
2	Turn the E300/E200 relay off by removing the large 7-position connector for AC based control modules or the large 8-position connector for DC-based control modules on the load side of the E300/E200 control module.
3	Turn the E300/E200 relay on by replacing the large 7-position connector for AC based control modules or the large 8-position connector for DC-based control modules on the load side of the E300/E200 control module.
4	Turn on the contactor that is controlling the electric motor.
5	Press and hold for 3 seconds, the blue Reset/Test button on the front of the E300/E200 relay to put the device into a Tripped state
6	Verify that the contactor is de-energized and the electric motor is turned off.
7	Record any failures in your company's SIF inspection database.
8	Press and release the blue Reset/Test button on the front of the E300/E200 communication module to clear the trip event.
9	Resume normal operation of the electric motor.

Repair and replacement

You must follow the repair procedures that are outlined in the E300 User Manual, publication 193-UM015.

Useful Life

The useful life of the E300/E200 Electronic Overload relay is 10 to 15 years, or 5,000,000 operations, whichever results in a shorter useful life.

Manufacturer Notification

If you experience a failure with any safety-certified device, contact your local Rockwell Automation distributor. With this contact, you can do the following:

- Return the device to Rockwell Automation so the failure is appropriately logged for the catalog number affected and a record is made of the failure.
- Request a failure analysis (if necessary) to determine the probable cause of the failure.

Approximate Dimensions

Dimensions are in millimeters (inches). Dimensions are not intended to be used for manufacturing purposes.

Figure 6 - E300/E200 Overload Relay Mounted on Bulletin 100-C09…-C23 Contactor

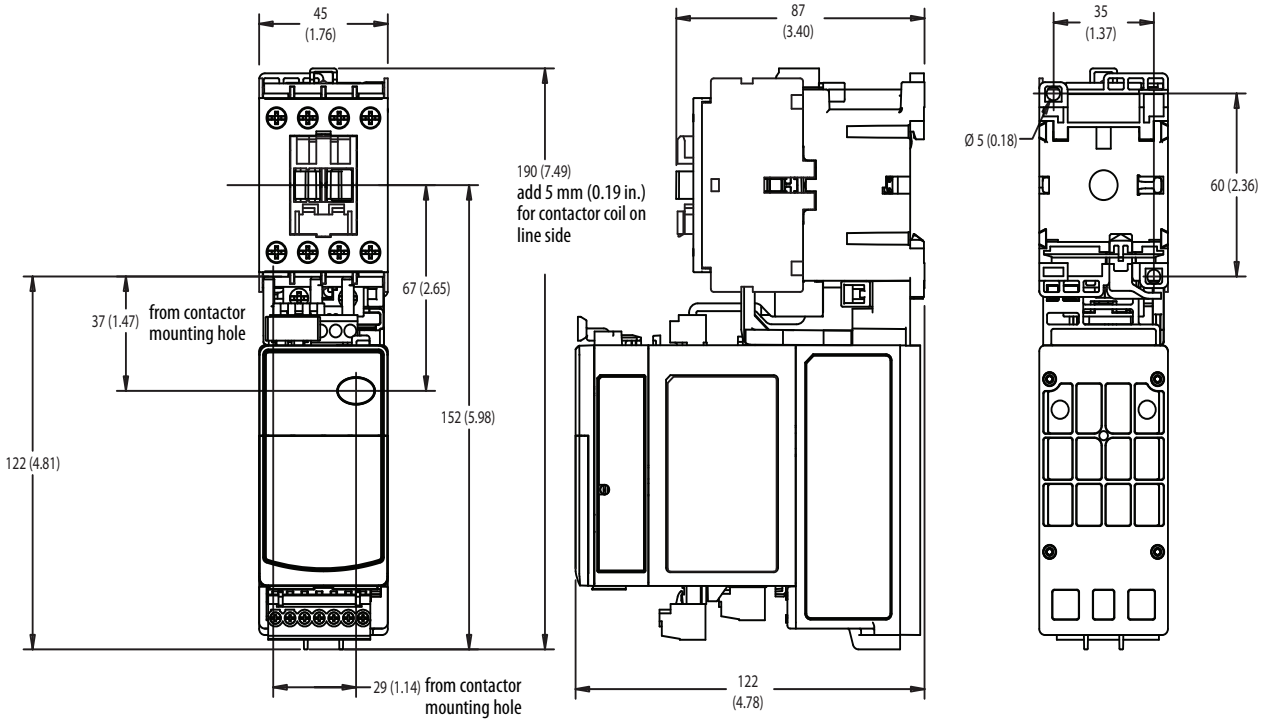

Figure 7 - E300/E200 Overload Relay Mounted on Bulletin 100-C30…-C37 Contactor

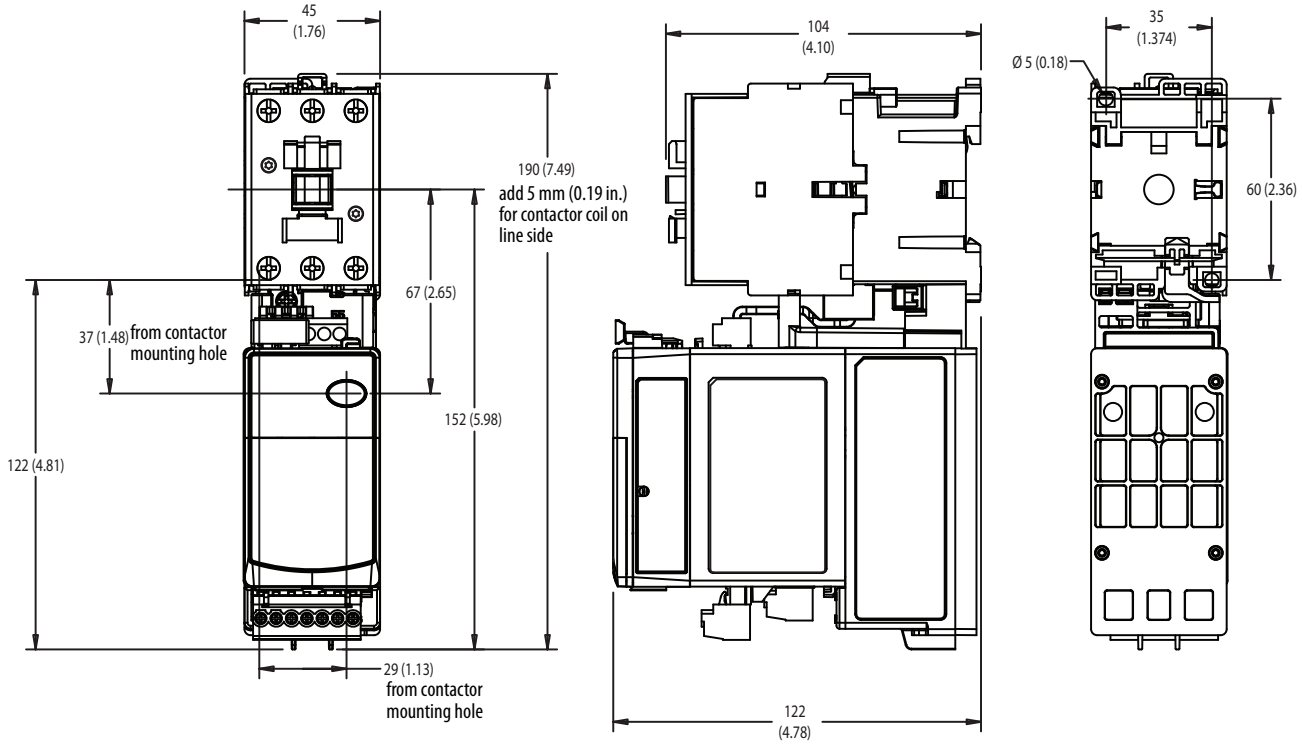

Figure 8 - E300/E200 Overload Relay Mounted on Bulletin 100-C43…-C55 Contactor

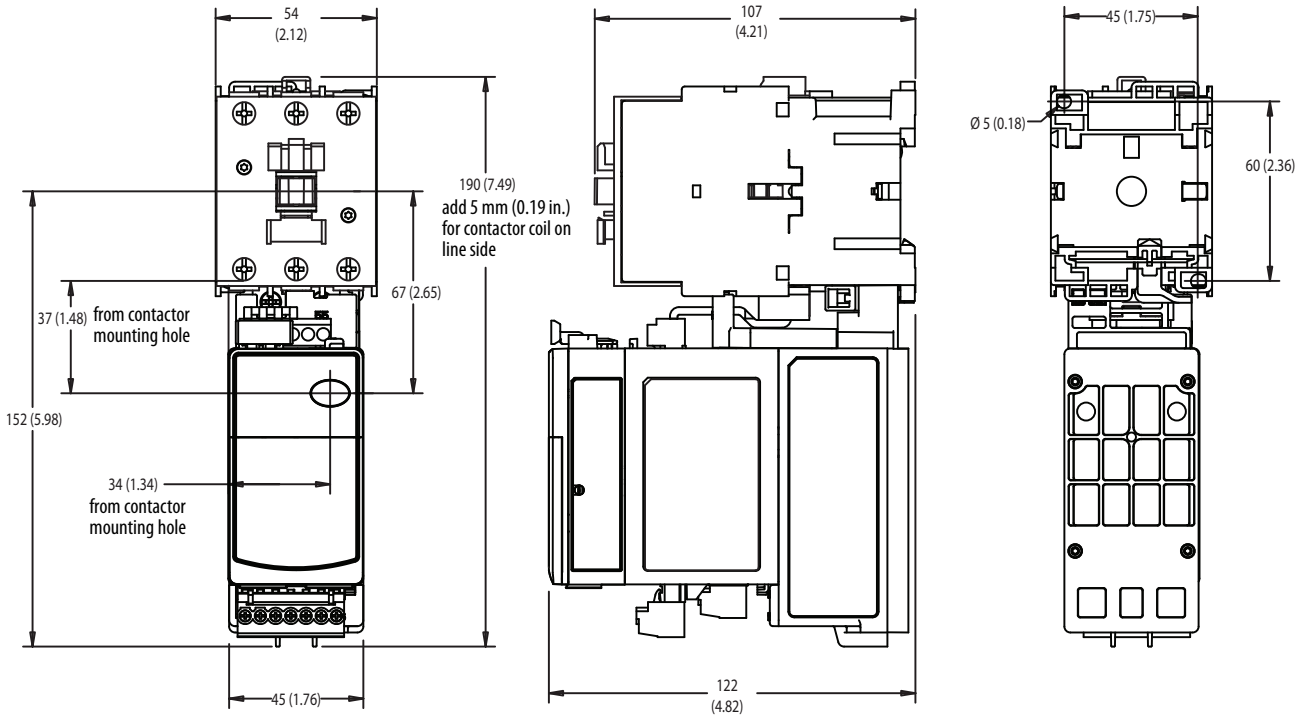

Figure 9 - E300/E200 Overload Relay Mounted on Bulletin 100-C60…-C97 Contactor

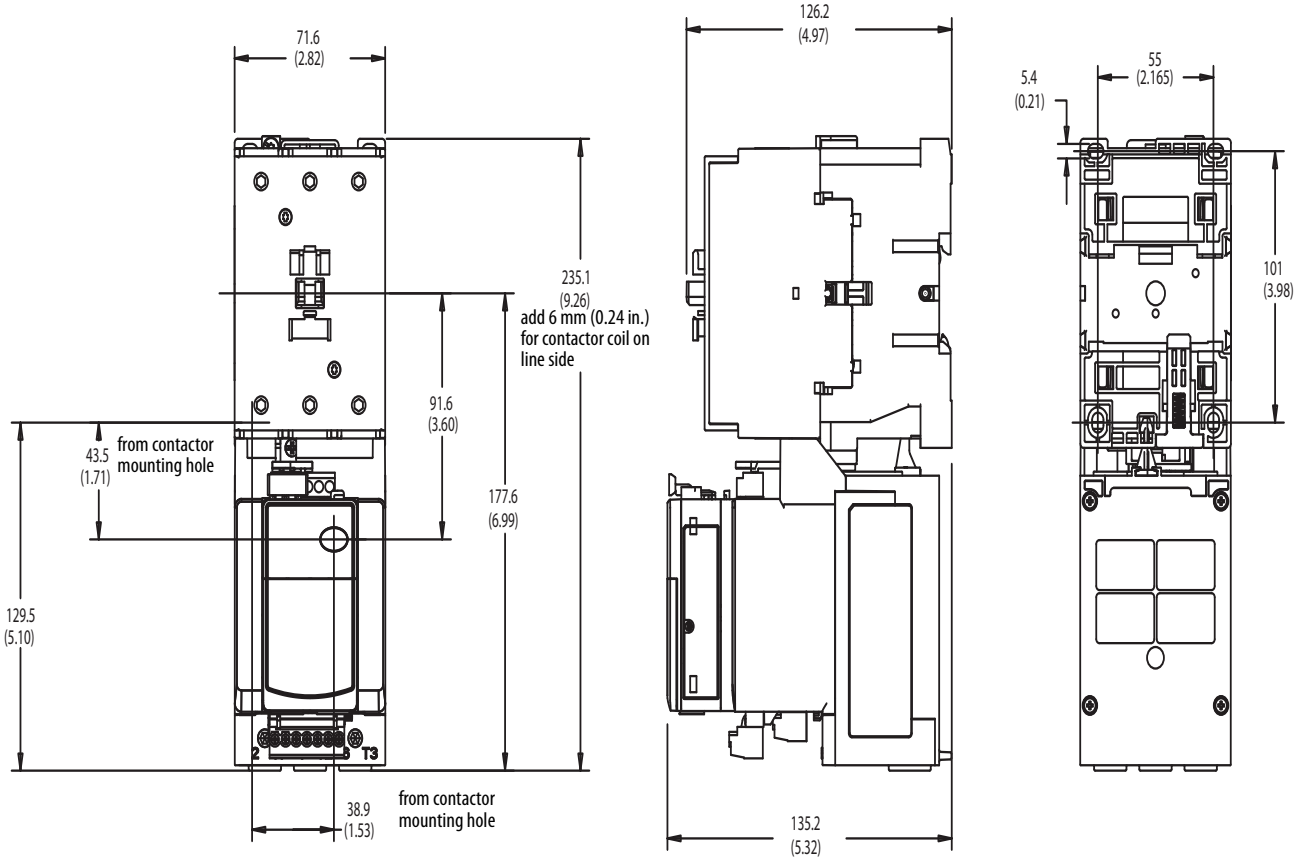

Figure 10 - E300/E200 Overload Relay with 193-ESM-___-__-D180 Sensing Module mounted on 100-D115…-D180 Contactor

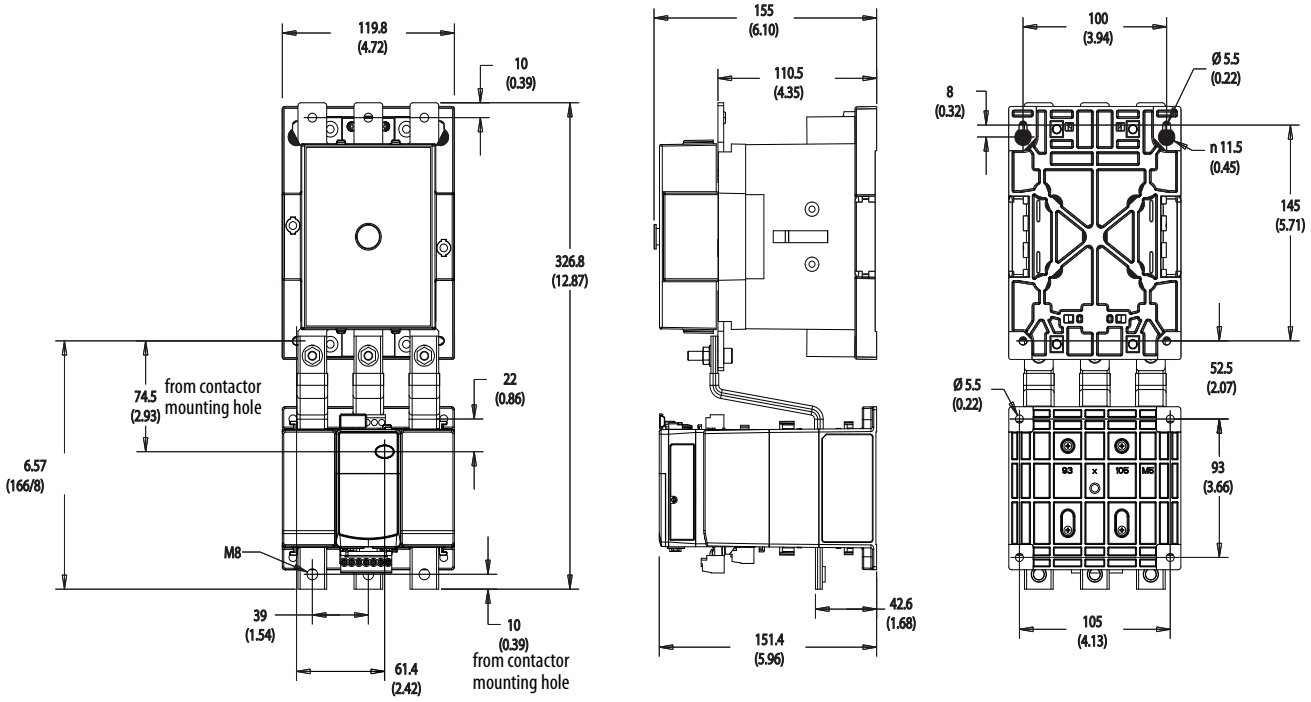

Figure 11 - E300/E200 Overload Relay with 193-ESM-___-__-D180 Sensing Module mounted on 100-D115…-D180 Contactor with Terminal Covers

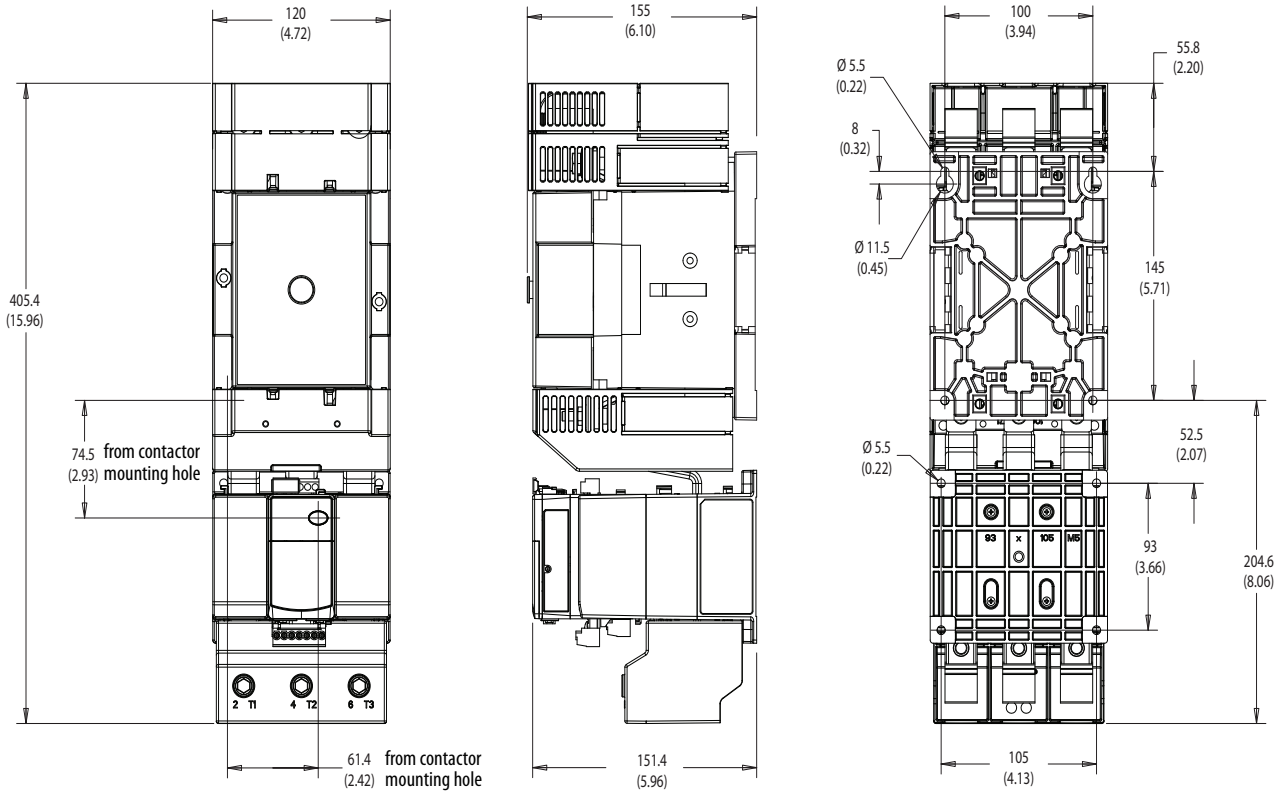

Figure 12 - E300/E200 Overload Relay with 193-ESM… Sensing Module mounted on 100-E116…-E146 Contactor

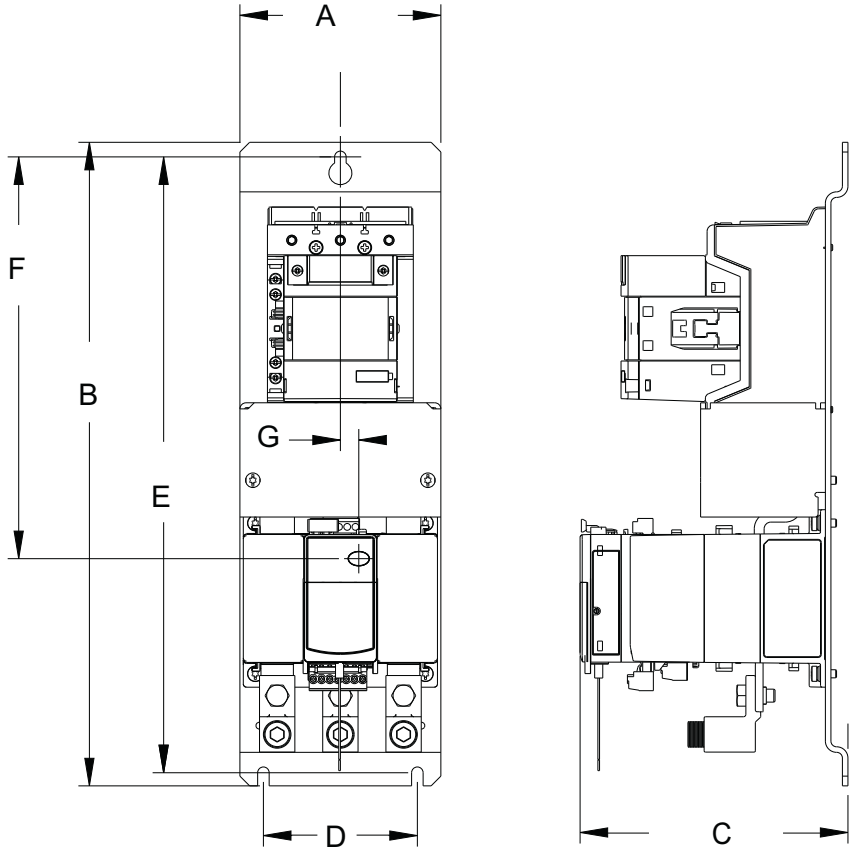

Device	Style	A Width	B Height	B1 Height w/ Lug	C Depth	D Mounting width	E Mounting Height	F Reset	G Reset
100-EMS146	193-EE overload relay	124 (4.88)	397.1 (15.63)	406.6 (16.01)	165.5 (6.5)	95 (3.74)	380 (14.96)	275.6 (10.85)	3.6 (0.14)
100-EMS146	193-ESM overload relay	124 (4.88)	397.1 (15.63)	---	165.3 (6.51)	95 (3.74)	380 (14.96)	247.9 (9.76)	11.4 (0.45)

Figure 13 - E300/E200 Overload Relay with 193-ESM… Sensing Module mounted on 100-E190…-E205 Contactor

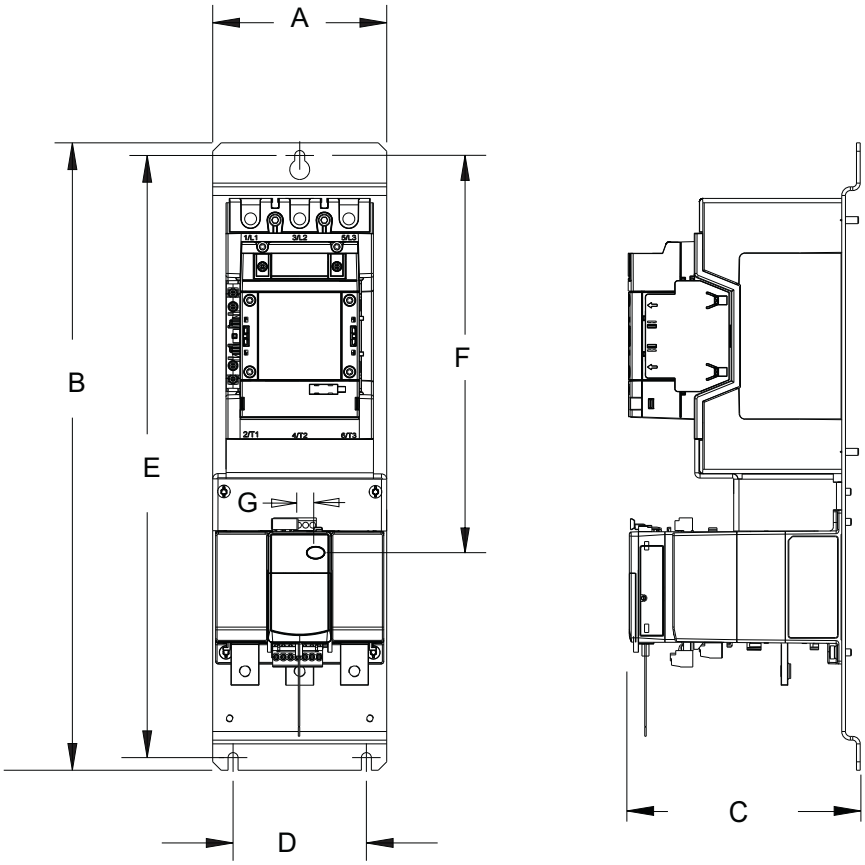

Device	Style	A Width	B Height	B1 Height w/ Lug	C Depth	D Mounting width	E Mounting Height	F Reset	G Reset
100-EMS205	193-EE overload relay	124 (4.88)	447.1 (17.6)		165.4/183* (6.5/7.2*)	95 (3.74)	429.1 (16.89)	325.76 (12.8)	3.6 (0.14)
100-EMS205	193-ESM overload relay	124 (4.88)	447.1 (17.6)	---	165.4/183* (6.5/7.2*)	95 (3.74)	429.1 (16.89)	283.1 (11.14)	11.4 (0.45)

Figure 14 - E300/E200 Overload Relay mounted on Bulletin 500 NEMA Size 0 and Size 1 Contactor

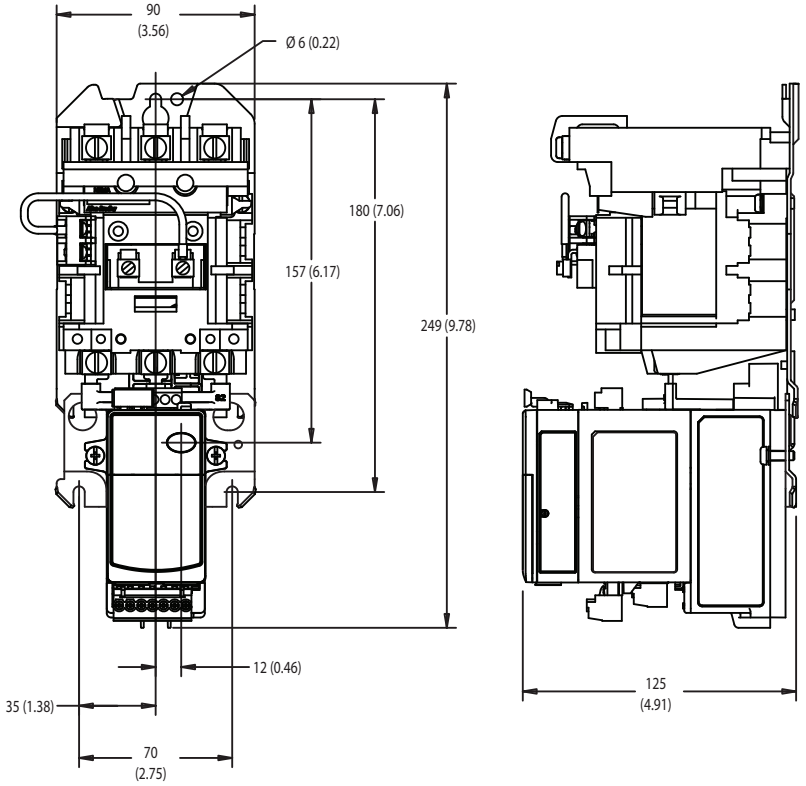

Figure 15 - E300/E200 Overload Relay mounted on Bulletin 500 NEMA Size 2 Contactor

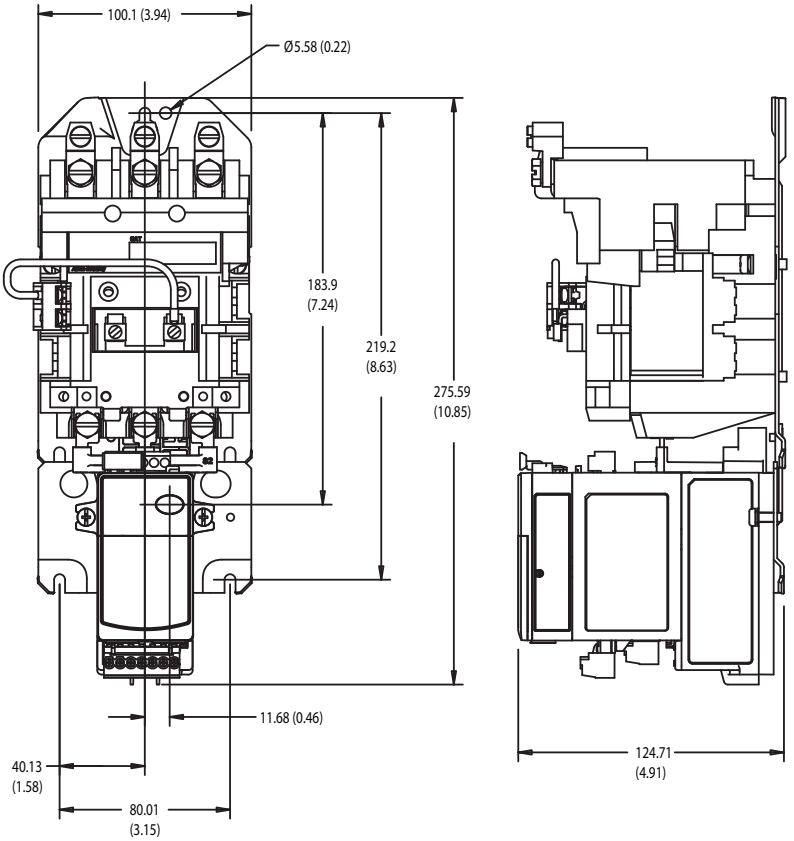

Figure 16 - E300/E200 Overload Relay mounted on Bulletin 500 NEMA Size 3 Contactor

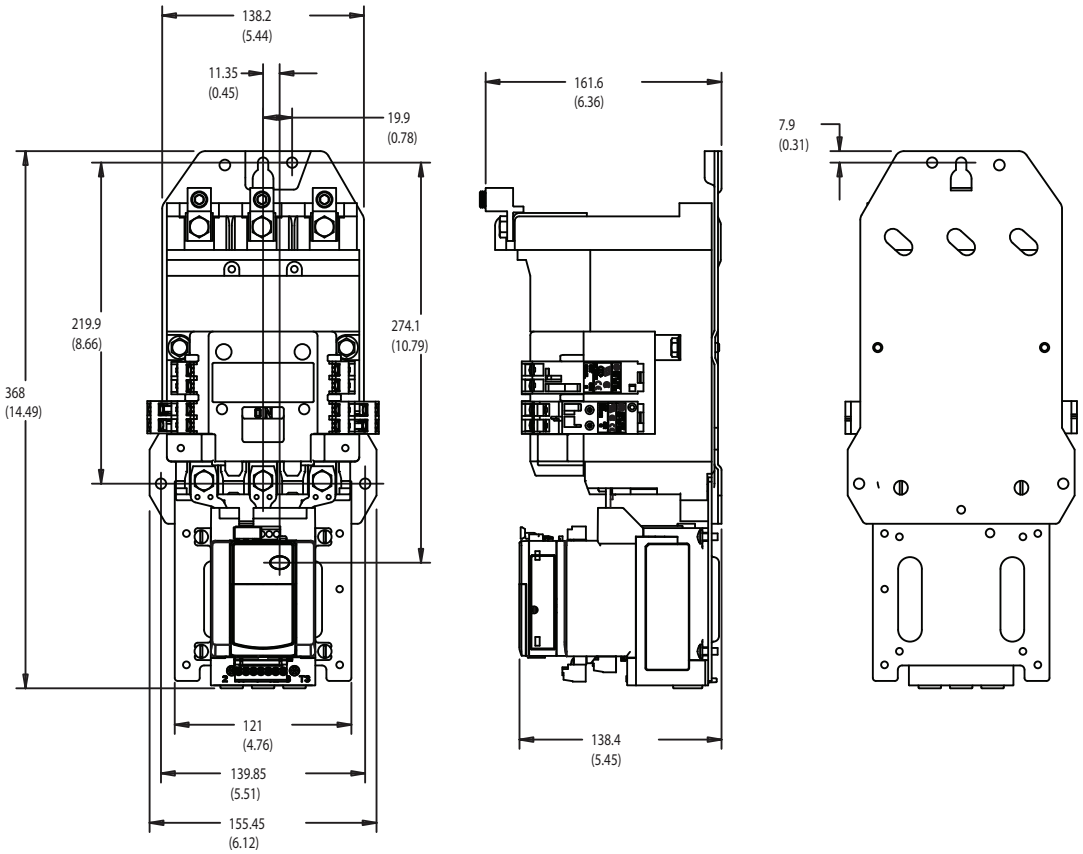

Figure 17 - E300/E200 Overload Relay with 592-ESM-____-___-S4 Sensing Module mounted on NEMA Contactor Size 4

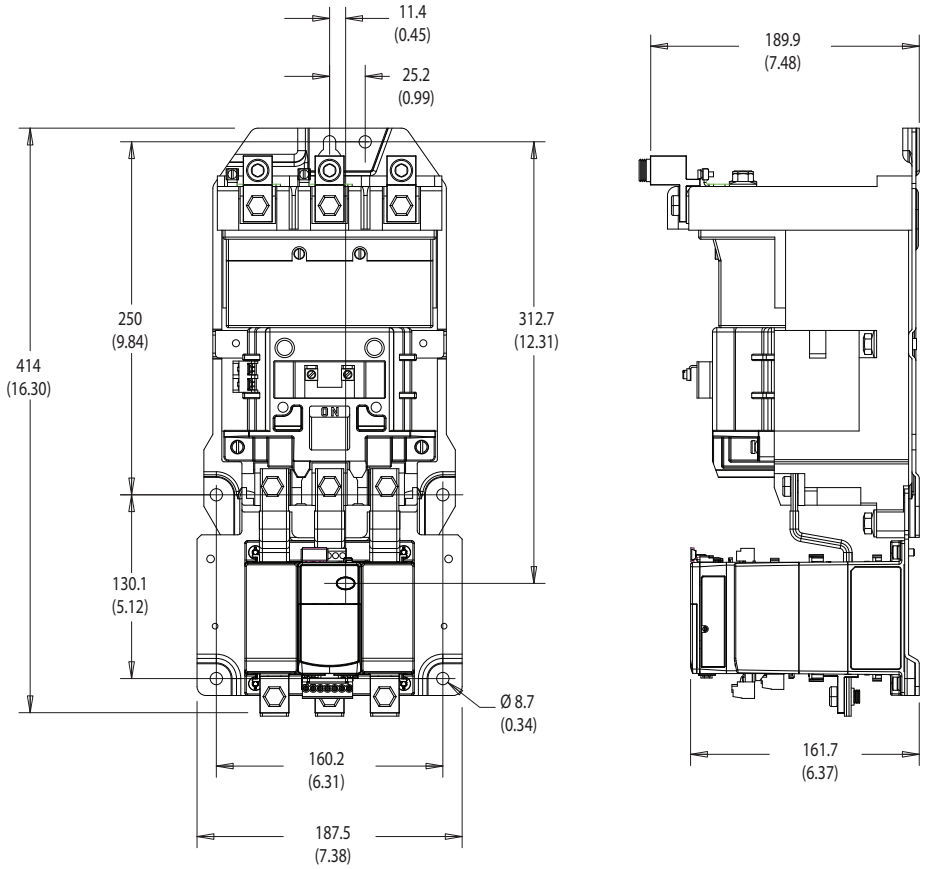

Figure 18 - E300/E200 Overload Relay with 193-ESM-____-30A-E3T or -60A-E3T Sensing Module, DIN Rail/Panel Mounted

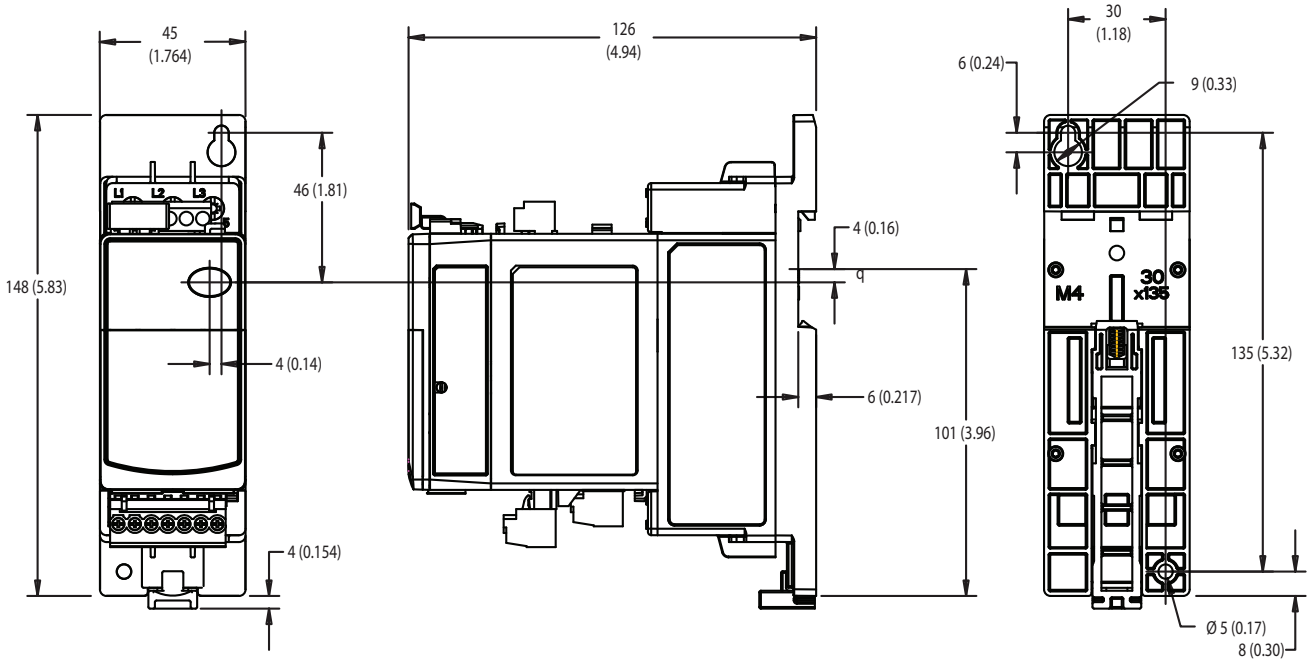

Figure 19 - E300/E200 Overload Relay with 193-ESM-____-100A-E3T Sensing Module, DIN Rail/Panel Mounted

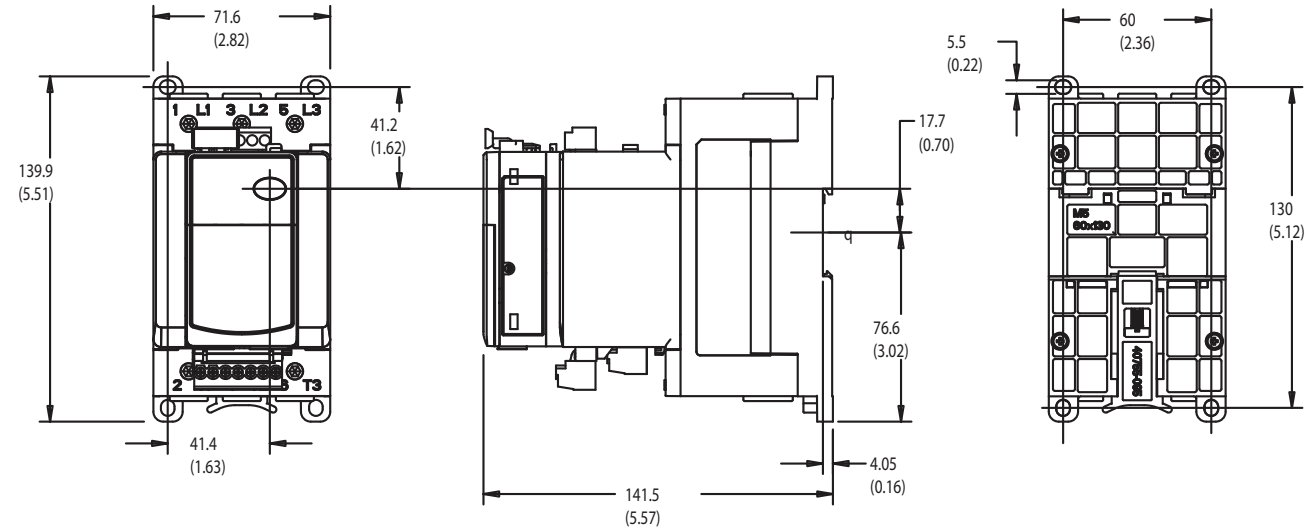

Figure 20 - E300/E200 Overload Relay with 193-ESM-____-30A-T or -60A-T Sensing Module, DIN Rail Mounted

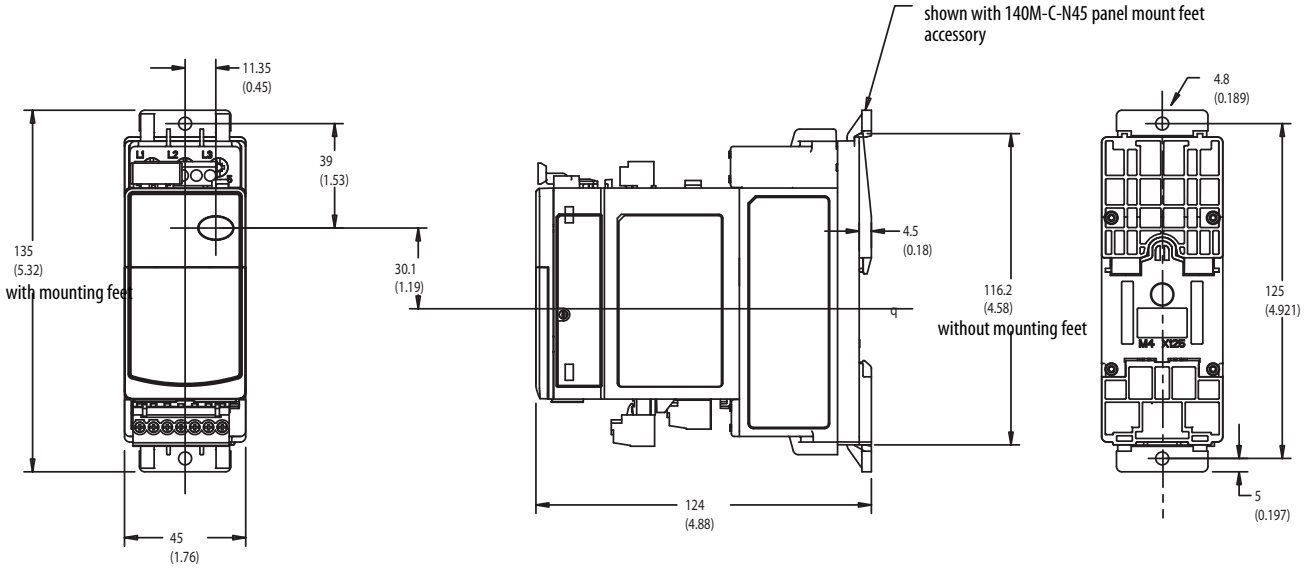

Figure 21 - E300/E200 Overload Relay with 193-ESM-____-100A-T Sensing Module, DIN Rail Mounted

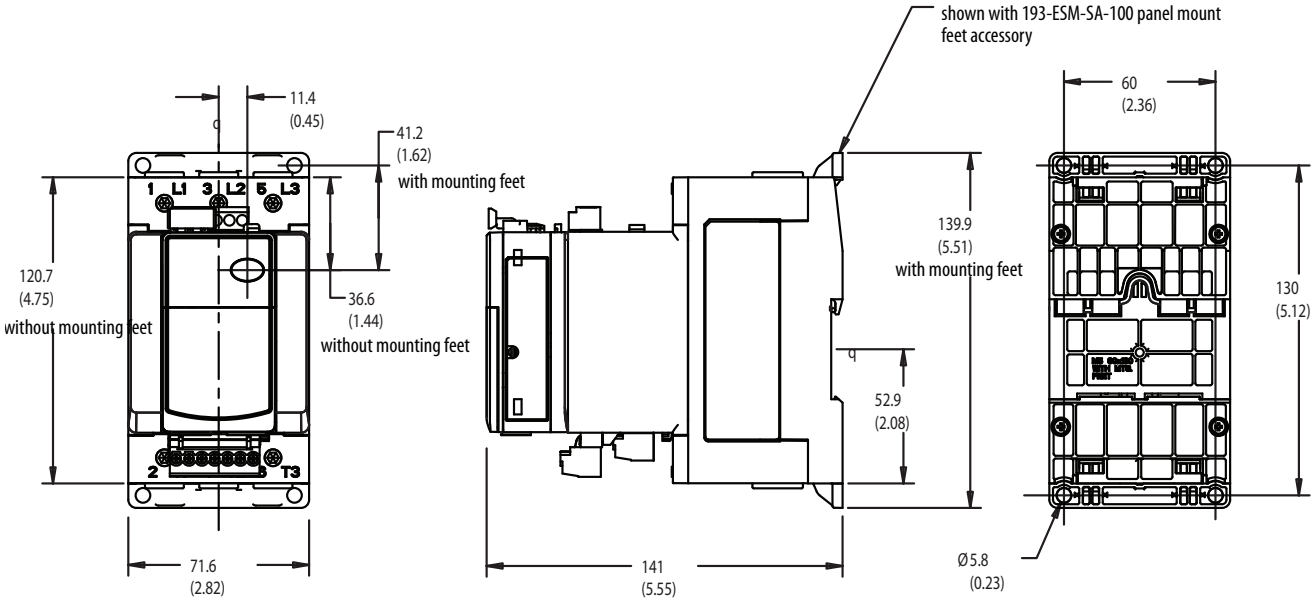

Figure 22 - E300/E200 Overload Relay with 193-ESM-____-200A-T Sensing Module, DIN Rail Mounted

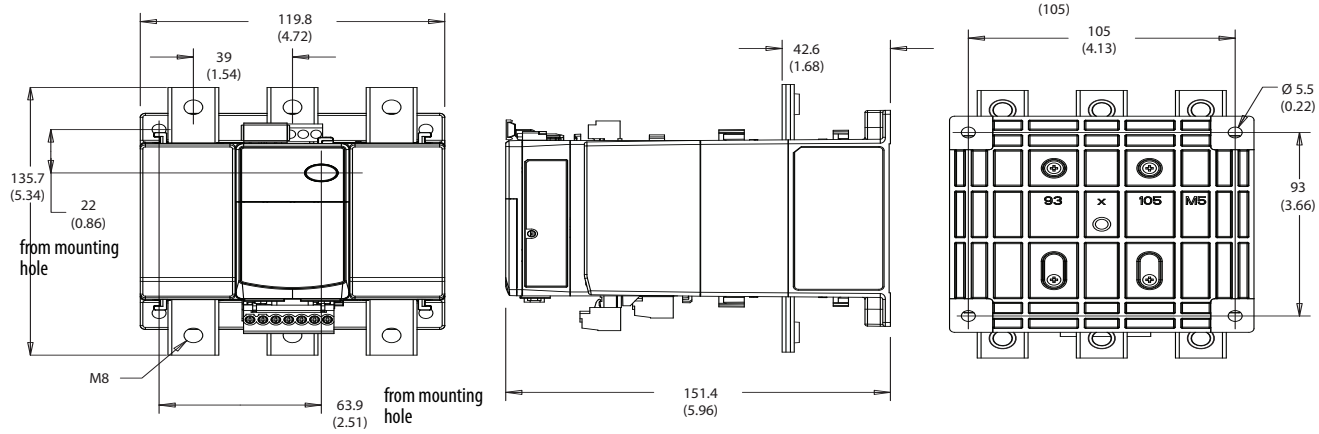

Figure 23 - E300/E200 Overload Relay with 193-ESM-____-200A-T Sensing Module with Terminal Covers

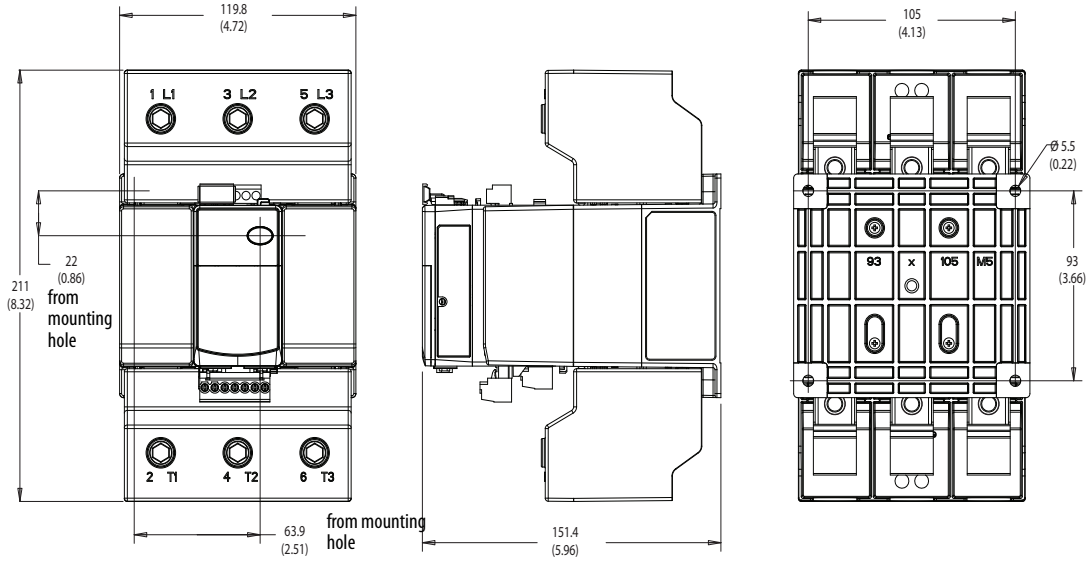

Figure 24 - E300/E200 Overload Relay with 193-ESM-____-30A-P, -60A-P, or -30A-CT Sensing Module, DIN Rail Mounted

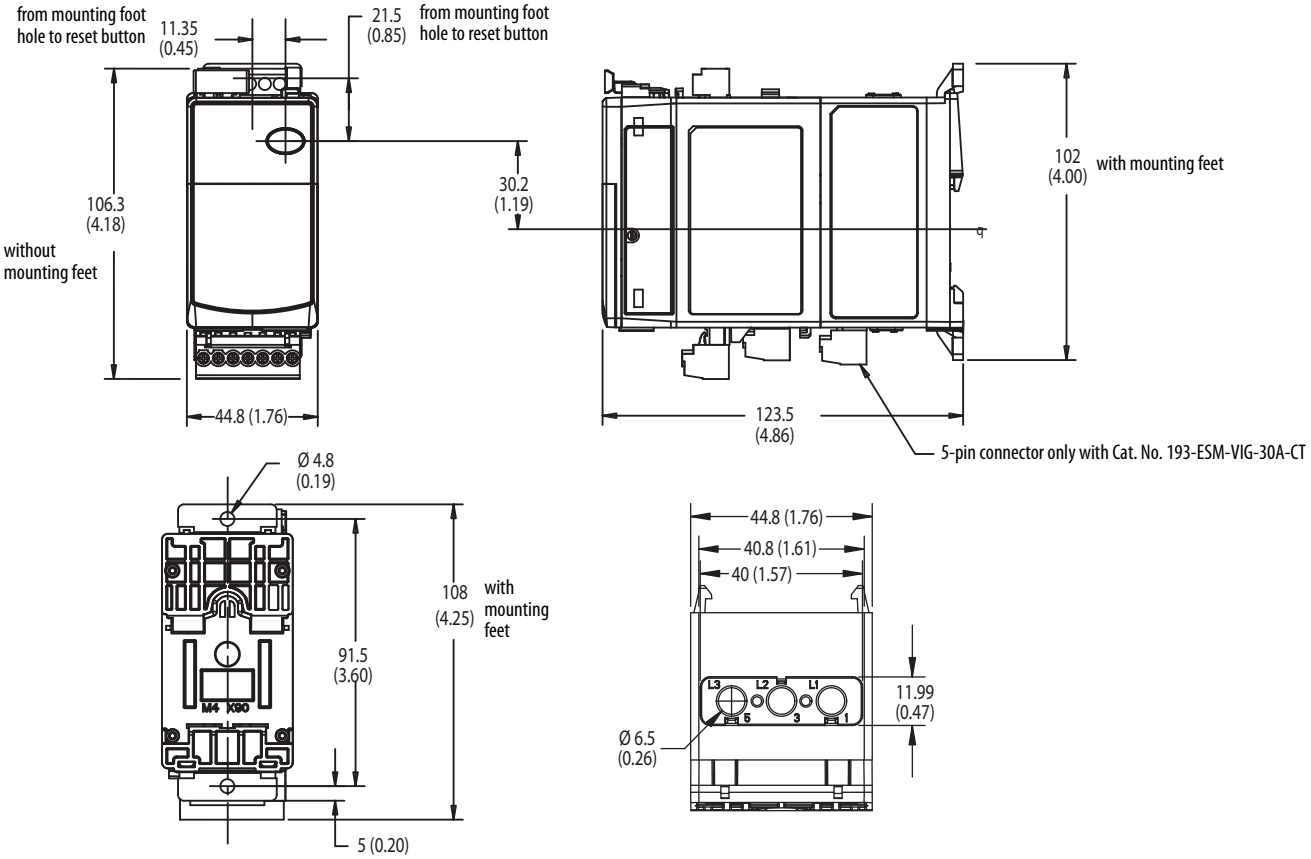

Figure 25 - E300/E200 Overload Relay with 193-ESM-____-100A-P Sensing Module, DIN Rail Mounted

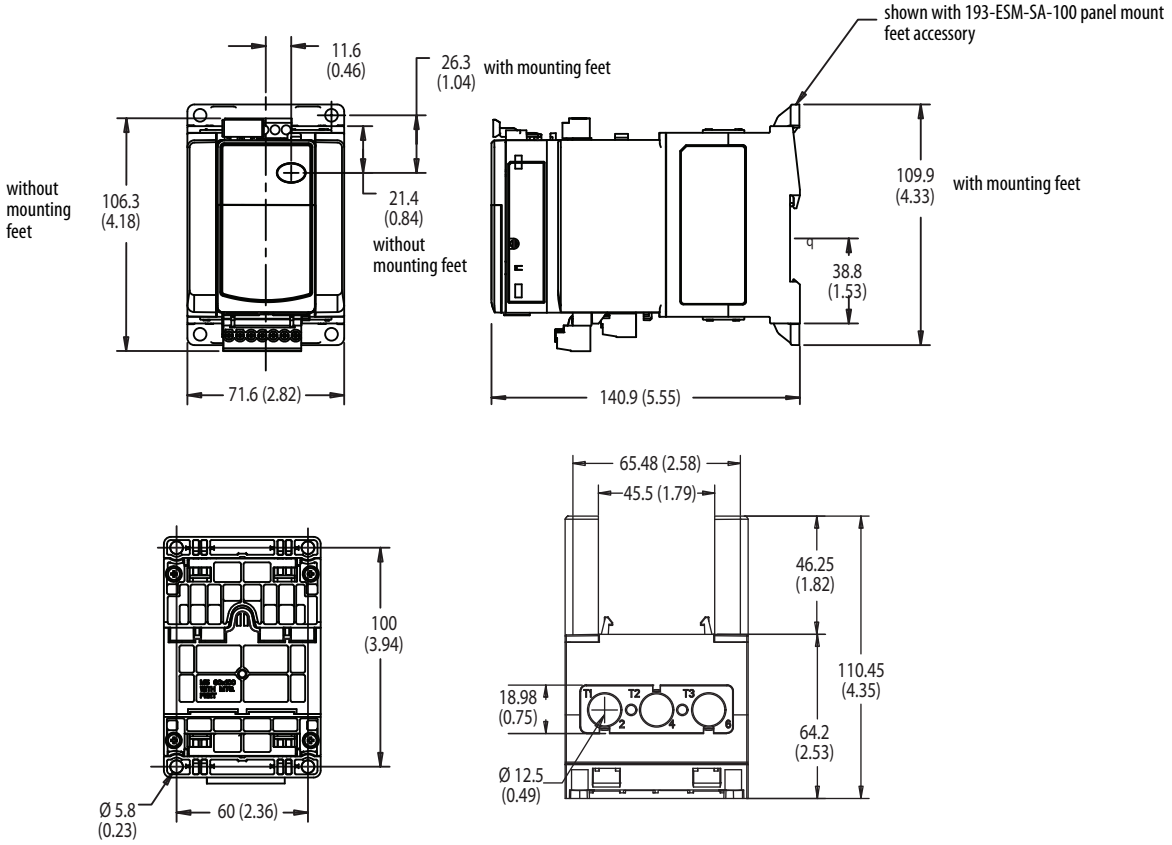

Figure 26 - E300/E200 Overload Relay with 193-ESM-____-200A-P Sensing Module, DIN Rail Mounted

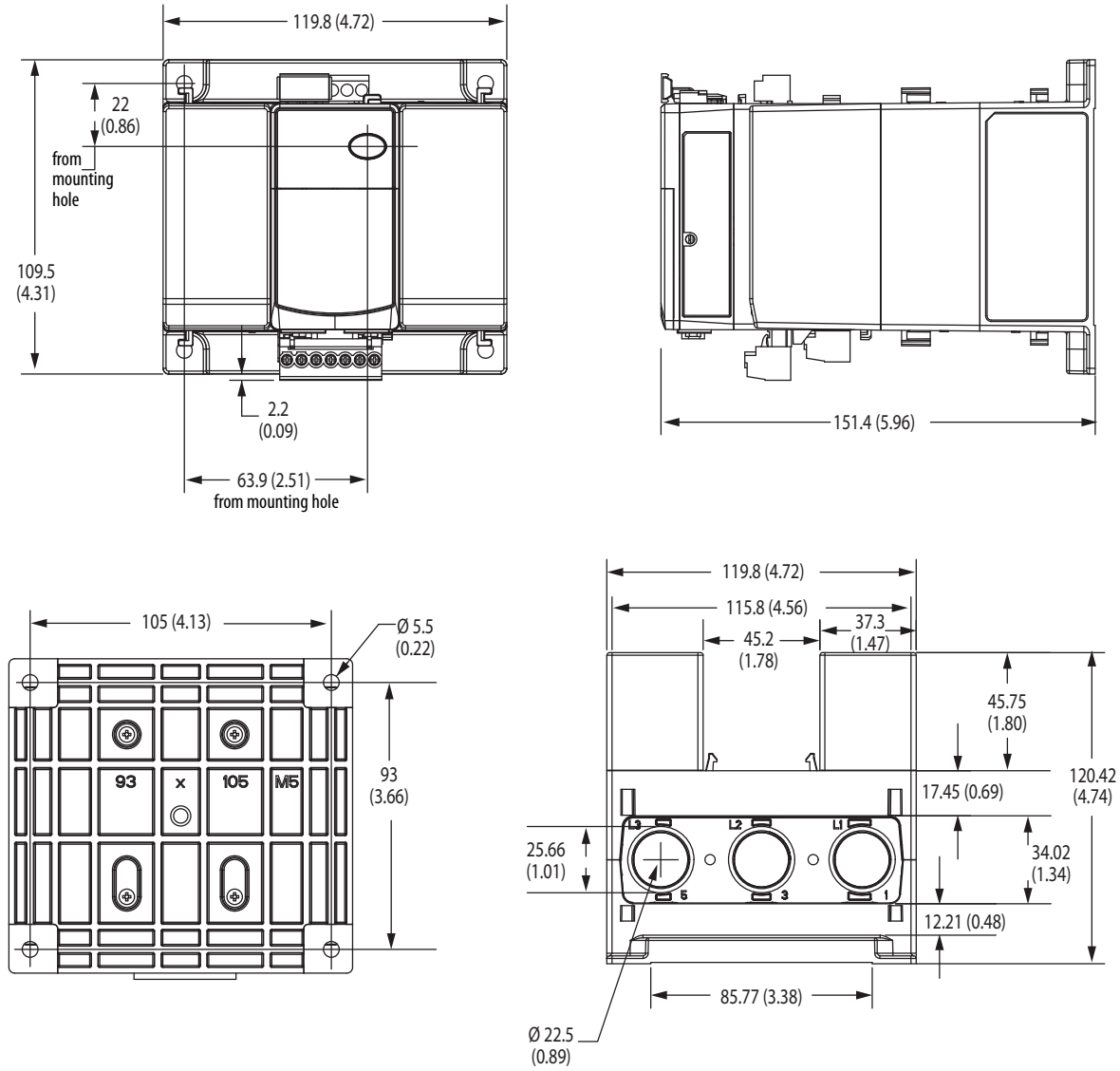

Figure 27 - E300/E200 Digital Expansion Module 193-EXP-DIO-____ and Analog Expansion Module 193-EXP-AIO-31

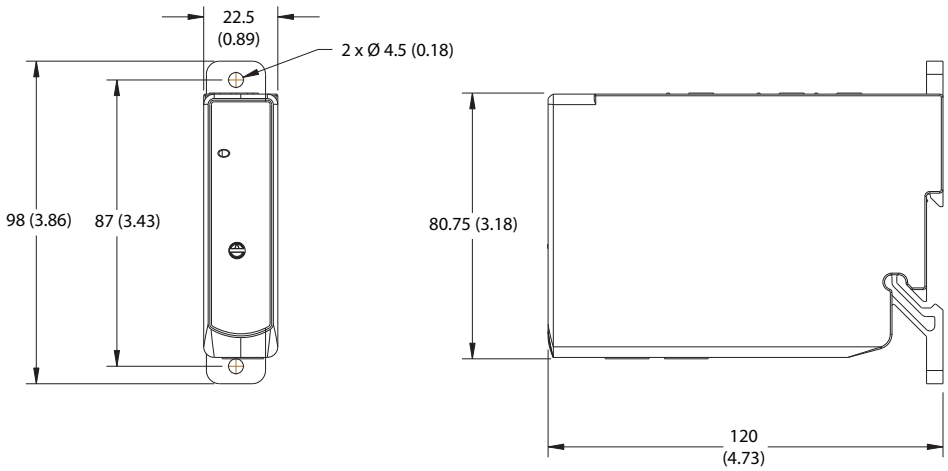

Figure 28 - E300/E200 Expansion Power Supply 193-EXP-PS-____

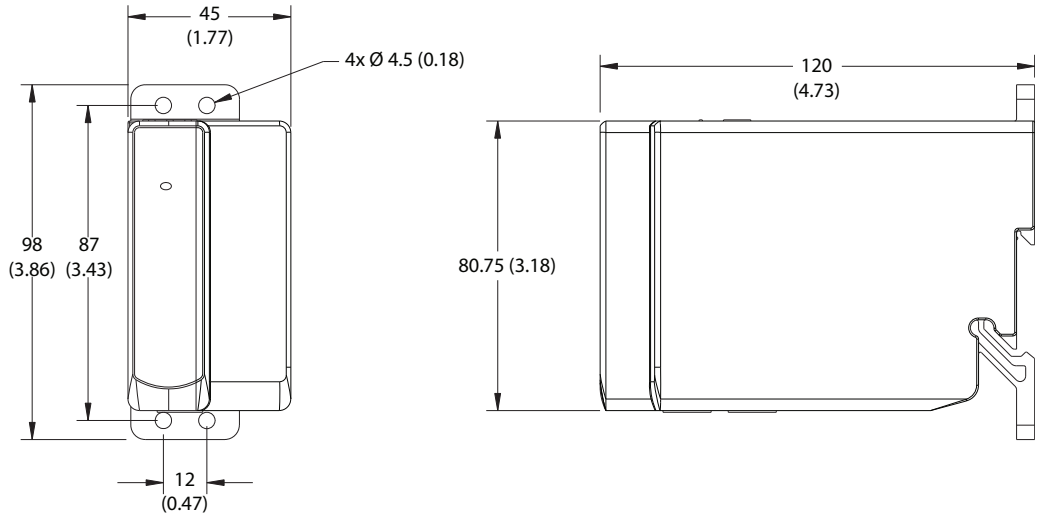

Figure 29 - E300/E200 Starter Control Station 193-EOS-SCS

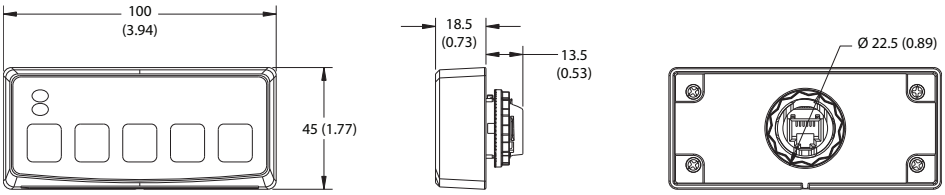

Figure 30 - E300/E200 Starter Diagnostic Station 193-EOS-SDS

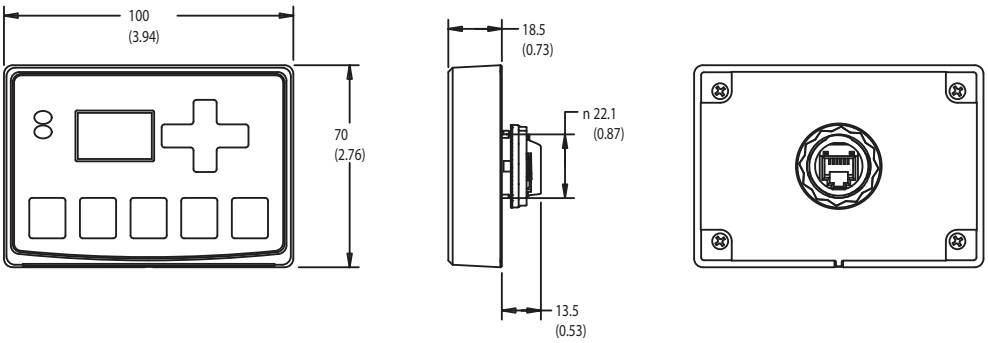

Notes:

Rockwell Automation Support

Use the following resources to access support information.

Technical Support Center	Knowledgebase Articles, How-to Videos, FAQs, Chat, User Forums, and Product Notification Updates.	www.rockwellautomation.com/knowledgebase
Local Technical Support Phone Numbers	Locate the phone number for your country.	www.rockwellautomation.com/global/support/get-support-now.page
Direct Dial Codes	Find the Direct Dial Code for your product. Use the code to route your call directly to a technical support engineer.	www.rockwellautomation.com/global/support/direct-dial.page
Literature Library	Installation Instructions, Manuals, Brochures, and Technical Data.	www.rockwellautomation.com/literature
Product Compatibility and Download Center (PCDC)	Get help determining how products interact, check features and capabilities, and find associated firmware.	www.rockwellautomation.com/global/support/pcdc.page

Documentation Feedback

Your comments will help us serve your documentation needs better. If you have any suggestions on how to improve this document, complete the How Are We Doing? form at http://literature.rockwellautomation.com/idc/groups/literature/documents/du/ra-du002_-en-e.pdf.

Additional Resources

These documents contain additional information concerning related products from Rockwell Automation.

Resource	Description
E300 Electronic Overload Relay User Manual, publication 193-UM015	Provides complete user information for the E300 Electronic Overload Relay.
193-K, 193-T1 Bimetallic Overload Relay Technical Data, publication 193-TD010	Provides technical information for Bulletin 193-K and 193-T1 bimetallic overload relays.
E1 Plus Overload Relay Specifications, publication 193-TD011	Provides technical information for Bulletin 193/592 E1 Plus overload relays.
Bulletin 1411 Current Transformers Technical Data, publication 1411-TD001	Provides technical information for Bulletin 1411 current transformers.
Industrial Automation Wiring and Grounding Guidelines, publication 1770-4.1	Provides general guidelines for installing a Rockwell Automation industrial system.
Product Certifications website, http://www.rockwellautomation.com/global/certification/overview.page	Provides declarations of conformity, certificates, and other certification details.
Safety Guidelines Safety Integrity Level Selection – Systematic Methods Including Layer of Protection Analysis, ISBN 1-55617-777-1, ISA	Describes a systematic method for selecting safety integrity levels for safety instrumented systems.
Control System Safety Evaluation and Reliability, 3rd Edition, ISBN 978-1-934394-80-9, ISA	Provides the detailed background necessary to understand how to meet important new safety regulations and reliability engineering topics
Safety Instrumented Systems Verification, Practical Probabilistic Calculations, ISBN 1-55617- 909-9, ISA	Explains how to do probabilistic calculations to accomplish SIL verification for safety systems.

You can view or download publications at http://www.rockwellautomation.com/global/literature-library/overview.page. To order paper copies of technical documentation, contact your local Allen-Bradley distributor or Rockwell Automation sales representative.

Rockwell Automation maintains current product environmental information on its website at http://www.rockwellautomation.com/rockwellautomation/about-us/sustainability-ethics/product-environmental-compliance.page.

Allen-Bradley, Connected Components Workbench, CopyCat, DeviceLogix, E3 Plus, E200, E300, LISTEN. THINK. SOLVE, Logix, Rockwell Automation, Rockwell Software, and RSNetworx are trademarks of Rockwell Automation, Inc.
DeviceNet and EtherNet/IP are trademarks of ODVA, Inc.
Trademarks not belonging to Rockwell Automation are property of their respective companies.

Rockwell Otomasyon Ticaret A.Ş., Kar Plaza İş Merkezi E Blok Kat:6 34752 İçerenköy, İstanbul, Tel: +90 (216) 5698400

www.rockwellautomation.com

Power, Control and Information Solutions Headquarters

Americas: Rockwell Automation, 1201 South Second Street, Milwaukee, WI 53204-2496 USA, Tel: (1) 414.382.2000, Fax: (1) 414.382.4444
Europe/Middle East/Africa: Rockwell Automation NV, Pegasus Park, De Kleetlaan 12a, 1831 Diegem, Belgium, Tel: (32) 2 663 0600, Fax: (32) 2 663 0640
Asia Pacific: Rockwell Automation, Level 14, Core F, Cyberport 3, 100 Cyberport Road, Hong Kong, Tel: (852) 2887 4788, Fax: (852) 2508 1846

Publication 193-TD006B-EN-P - January 2019
Supersedes Publication 193-TD006A-EN-P - September 2018

Copyright © 2019 Rockwell Automation, Inc. All rights reserved. Printed in the U.S.A.