Technical Data

Original Instructions

Universal Visible-blade Disconnect Switches Specifications

Bulletin Numbers 1494U, 1494V

Topic	Page
Summary of Changes	2
Components Product Selection	3
Accessories Product Selection	5
Catalog Number Explanation	7
Specifications	8
Approximate Dimensions	9
Additional Resources	15

Rockwell Automation

This document provides selection and specification information for the Bulletin 1494U and Bulletin 1494V universal visible-blade disconnect switches. Universal visible-blade disconnect switches can be user- or factory-assembled. These disconnect switches provide visual indication of the ON or OFF status of the knife-blade disconnect design. You can choose from fusible or non-fusible versions. These disconnect switches also allow for either rod or cable operation.

Summary of Changes

Topic	Page
Updated Components Products Selection	3
Updated Product Accessories Selection	5

Components Product Selection

Use the components product selection tables for user-assembled devices

Disconnect Switches

Continuous Current Rating [A] 600V AC 250/600V DC	Maximum Hp - UL and CSA Applications									Maximum kW - IEC Applications (Category AC 23)			Switch with Right-hand Mechanism Cat. No.
	3-Phase, 60 Hz					1 Phase, AC		DC(1)		3-Phase, 50 Hz			
	115V	200...208V	230V	460V	575V	115V	230V	250V	600V	220...240V	380...440V	500...600V	
30	3	7.5	7.5	15	20	2	3	–	15	5.5	11	15	1494U-D30(2)
60	7.5	15	15	30	50	3	10	–	30	11	22	37	1494U-D60(2)
100	–	25	30	60	75	–	–	–	50	22	45	55	1494U-D100(2)
200	–	50...60	60	125	150	–	–	–	40	48	90	110	1494U-D200
400	–	75	125	250	350	–	–	50	–	90	185	257	1494U-D400
600	–	150	200	400	500	–	–	50	–	150	295	375	1494V-DS600

(1) Ratings are based on two poles in series to break one line of the DC supply voltage and the remaining pole to break the second DC supply line.
(2) Aluminum lugs are installed on the line side of each disconnect switch. Additional aluminum lugs are included with each disconnect switch that are to be field-installed on the load side of the switch or on the fuse block.

Connecting Rods

Approximate dimensions are not intended for manufacturing purposes.

Disconnect Switch Size [A]	Enclosure Working Depth [in. (mm)] (1)		Cat. No.
	Minimum	Maximum	
30, 60, 100, 200	6-3/4 (172)	19 (483)	1494U-R1
200	6-3/4 (172)	9-1/8 (232)	1494V-RA3
	9-1/8 (232)	21-5/8 (585)	1494V-RA4
400, 600	9-1/2 (241)	10 (254)	1494V-RB3(2)
	9-1/2 (241)	23 (584)	1494V-RB4(2)

(1) Enclosure depth is measured from the top of the flange to the disconnect switch mounting surface.
(2) Kit includes two connecting rods.

Operating Handles

Handle Type	Description	Mounting	Disconnect Switch Size [A]	Cat. No.
Type 1, 3R, 4, 4X, 12	Nonmetallic	Right or Left Flange	30, 60, 100, 200	1494U-HP1(1)
				1494F-P1
Type 1, 3R, 4, 12	Painted Metal		30, 60, 100, 200	1494U-HM1(1)
				1494F-M1
			400, 600	1494F-M2(1)
Type 4, 4X	Stainless Steel		30, 60, 100, 200	1494U-HS1 (1)
				1494F-S1
			400, 600	1494F-S2(1)

(1) Kits include these versions of the operating handles.

Trailer Fuse Block Kits

Disconnect Switch Size [A]	Fuse	Cat. No.
30	See Fuse Clip Kits	1494U-F30
60		1494U-F60
100		1494U-F100
200		1494U-F200
400		1494U-F400
600	Class J	1494V-FS600
	Class H	1491-N621(1)
	Class R	1491-R621(1)

(1) Three fuse kits are required per application.

Cable Mechanism

Disconnect Switch Size [A]	Cable Length [ft (m)]	Right-hand Cable Mechanism Cat. No.
30, 60, 100	3 (0.91)	1494U-C313
	4 (1.22)	1494U-C314
	5 (1.52)	1494U-C315
	6 (1.83)	1494U-C316
200	4 (1.22)	1494U-C24
	5 (1.52)	1494U-C25
	6 (1.83)	1494U-C26
400	4 (1.22)	1494U-C44
	5 (1.52)	1494U-C45
	6 (1.83)	1494U-C46
600	4 (1.22)	1494U-C64
	5 (1.52)	1494U-C65
	6 (1.83)	1494U-C66

Fuse Clip Kits

Fuse Class	Fuse Clip Rating [A]		Cat. No.(1)
	250V	600V	
H, J	30	–	1494U-FC302J
	60	30	1494U-FC30J
	–	60	1494U-FC60J
	100	100	1494U-FC100J
R	30	–	1494U-FC302R
	60	30	1494U-FC30R
	–	60	1494U-FC60R
	100	100	1494U-FC100R
H, J	200	200	1401-N45
	400	400	1401-N46
J(2)	200	200	–
	400	400	–
	600	600	–
R	200	200	1401-N54
	400	400	1401-N55
H, R(3)	600	600	–

(1) Six clips included per kit.
(2) Fuse clips are not required when bolted to a terminal.
(3) Included with Bulletin 1491 separately mounted fuse blocks.

Accessories Product Selection

Optional accessories are available for all universal disconnect sizes.Auxiliary Contacts and Electrical Interlocks

Disconnect Switch Size [A]	Description	Cat. No.
Auxiliary Contacts		
30...200	1 N.O., 10 A rated, A600, Q600, standard contact	1494U-NO
	1 N.C., 10 A rated, A600, Q600, standard contact	1494U-NC
	1 N.O. low voltage, 2.5 A rated, C300, R150, QuadConnect™ contact	1494U-NOLV
	1 N.C. low voltage, 2.5 A rated, C300, R150, QuadConnect contact	1494U-NCLV
400	1 N.O., 10 A rated, A600, Q600, standard contact	1495-N8
	1 N.C., 10 A rated, A600, Q600, standard contact	1495-N9
600	1 N.O., 10 A rated, A600, Q600, standard contact	595-A
	1 N.C., 10 A rated, A600, Q600, standard contact	595-B
	Contact Adapter Kit(1)	595-N1
Electrical Interlocks		
30...100	2 N.O., 10 A rated, 250V AC/DC	1494U-AE
400	1 N.O. and 1 N.C., early break, **right-**hand mechanism	1495-N43
600		1495-N34(2)
200	2 N.O. and 2 N.C., early break, standard contact	1494U-AE200
400	2 N.O. and 2 N.C., early break, **right-**hand mechanism	1495-N44
600		1495-N35(1)

(1) One adapter kit required per auxiliary contact.
(2) Additional adapter kit Cat. No. 1495-N36 is required for installation.

Protective Covers

Disconnect Switch Size [A]	Fuse Class	Fuse Cover Cat. No.
30, 60, 100	Non-fusible	1494U-PC1
30	H, J	
30	R	
30	H, J	
60	H, J	
100	H, J	1494U-PC2
30	R	
60	R	
100	R	
200	H, J, R	1494U-PC200
400	H, J, R	1494U-PC400
600	Non-fusible	1495-N61
600	J	
600	H, J, R	1495-N69(1)

(1) For use with separately mounted fuse blocks; catalog numbers 1491-R621 or 1491-N621.

Adapters

Disconnect Switch Size [A]	Description	Cat. No.
30...100	Line Terminal Adapter (2 per package) - Terminals are connected to L1 and L2 to provide power even when the switch is de-energized. Wire Size: 14...8 AWG, copper	1494U-ALT31
	Cross Bar Adapter - The adapter attaches to the 1494U switch so that it can retrofit in existing 1494V and 1494C switch installations.	1494U-AC
200	Line Terminal Adapter (2 per package)	1494U-ALT200
400	Line Terminal Adapter (2 per package)	1494R-N19
600	Line Terminal Adapter (2 per package)	1494U-ALT600

Lug Connectors (3 per package)

Disconnect Switch Size	Lug		Wiring Compatibility		Catalog No.
	Description	Material	Material	Size[1]	
30-100A	Single Port	Aluminum	Copper	14...10 AWG	1494U-LA36
			Aluminum	12...10 AWG	
			Copper/Aluminum	14...2 AWG	
	Single Port	Copper	Copper	14...4 AWG	1494U-LC36
			Copper	14...8 AWG	
			Copper	16 AWG	
	Multi-port, (x6)	Aluminum	Copper	14...4 AWG	1494U-LM31
			Aluminum	12...4 AWG	
			Copper/Aluminum	10 AWG	
	Single Port	Aluminum	Copper	14...1/0 AWG	1494U-LA100
			Aluminum	12...1/0 AWG	
			Copper/Aluminum	12...4 AWG	
	Single Port	Copper	Copper	8...1/0 AWG	1494U-LC100
200A	Single Port	Aluminum	Copper/Aluminum	6...250 MCM AWG	1494U-LA200
	Single Port	Copper	Copper	6...250 MCM AWG	1494U-LC200
	Multi-port, (x6)	Aluminum	Copper	14...4 AWG	1494U-LM200
			Aluminum	12...4 AWG	
			Copper/Aluminum	10 AWG	
400A	Single Port	Aluminum	Copper/Aluminum	6...300 MCM AWG	1494U-LA400
	Single Port	Copper	Copper	4...500MCM	1494R-N15
	Single Port	Copper	Copper	1/0...250 MCM AWG	1494R-N14
	Multi-port, (x12)	Aluminum	Copper	14...4 AWG	1494U-LM400
			Aluminum	12...4 AWG	
			Copper/Aluminum	10 AWG	
600A	Single Port	Aluminum	Copper/Aluminum	1/0...500 MCM AWG	1494U-LA600
	Single Port	Copper	Copper	1/0...350 MCM AWG	1494R-N10
	Single Port	Copper	Copper	1/0...350 MCM AWG	1494R-N11[2]
	Multi-port, (x12)	Aluminum	Copper	14...4 AWG	1494U-LM600
			Aluminum	12...4 AWG	
			Copper/Aluminum	10 AWG	

(1) Wiring must be consistent in gauge, material, and type across each lug and terminal.
(2) For use with Cat. No. 1491-N621 or 1491-R621 fuse blocks.

Replacement Parts Product Selection

Description	Cat. No.
Hardware Kit for 30...100 A Disconnect Switches-The kit includes (4) mounting screws and (1) line-side shield.	1494U-K31
Hardware Kit for 30...100 A Fuse Blocks-The kit includes (2) mounting screws and (2) phase barriers.	1494U-PB31
200 A Phase Barrier	1494U-PB200

Kits Product Selection

Use the kits product selection tables for factory-assembled devices.

Catalog Number Explanation

Examples that are given in this section are not intended to be used for product selection.

1494U	-	R	30	-	C3	LA	M	PC
a		b	c		d			

a	
Bulletin Number	
Code	**Description**
1494U	Disconnect switch, rod, or cable operated[2]

b	
Fusing	
Code	**Description**
N	Non-fusible
J	Class J clips
R	Class R clips

c	
Switch Rating	
Code	**Description**
30	30 A
60	60 A
100	100 A
200	200 A
400	400 A
600	600 A

d	
Options[1]	
Code	**Description**
CR	Threaded rod
C3	Cable length – 3 ft (0.91 m)
C4	Cable length – 4 ft (1.2 m)
C5	Cable length – 5 ft (1.5 m)
C6	Cable length – 6 ft (1.8 m)
HJ	H/J fuse clip[3]
LA	Lugs – Aluminum
LC	Lugs – Copper
M	Painted metal handle
N	Non-metallic handle
NC	(1) N.C. auxiliary contact – 10 A
NO	(1) N.O. auxiliary contact – 10 A
PC	Protective cover – for line and load
S	Stainless steel handle

(1) Operating mechanism, lugs, and handle are required selections. Options must be listed in alphabetical order to validate.
(2) Aluminum lug/line kits are provided with each disconnect switch, sizes 30...100 only.
(3) If using H Class fusing, this accessory is required. It is optional if using J Class fusing, as there is a direct mount capability.

Specifications

Auxiliary Contact Electrical Ratings							
Standard Contact 1 N.O. or 1 N.C.	NEMA/EEMAC	A600[2], Q600					
	IEC	AC 15, DC 13 to IEC/EN60947-5-1 and UL 508, 17V, 5 mA minimum					
Low-Level Contact 1 N.O. or 1 N.C.	NEMA/EEMAC	C300, R150					
	IEC	AC 15, DC 13 to IEC/EN60947-5-1 and UL 508, 5V, 1 mA minimum					
Electrical Interlock Ratings							
Standard Contact 2 N.O.	NEMA/EEMAC	10 A: 250V AC, 0.3 A: 250V DC					
Mechanical							
Degree of Protection	Operating handles	Non-metallic Type 1, 3R, 4, 4X, 12 Painted Type 1, 3R, 4, 12 Stainless steel Type 4, 4X				Painted Type 1, 3R, 4, 12 Stainless steel Type 4, 4X	
Switch Size		30 A	60 A	100 A	200 A	400 A	600 A
Mechanical Life (typical operations)		10 000			8000	6000	5000
Switching Frequency (operations/min), maximum		6			5	4	3
Environmental							
Ambient Temperature	Open	-20...+60 °C (-4...+140 °F)					
	Enclosed	-20...+40 °C (-4...+104 °F)					
	Storage	-40...+65 °C (-40...+149 °F)					
Altitude (per IEC 947-1)		2000 m (6562 ft					
Relative Humidity (per IEC 947-1)		90% at 20 °C (68 °F) and 50% at 40 °C (104 °F)					
Design Specification/Test Requirements							
Dielectric Strength		2200V for 1 minute					
Short-circuit Withstand Capability		10 000 A, 600V AC/DC: unfused or with Class H fuses 10 000 A, 600V DC: with Class J or Class R fuses 200 000 A, 600V AC: with Class J or Class R fuses					
Construction							
Switch Body Material		Glass-filled thermoplastic				Glass-filled thermoset plastic	
Switch Size		30 A	60 A	100 A	200 A	400 A	600 A
Conductor Size		See Lug Connectors (3 per package) on page 6.					
Recommended Torque	Switch side Lug to terminal[1]	45 lb•in 20 lb•in	45 lb•in 50 lb•in	150 lb•in 90 lb•in	275 lb•in 175 lb•in	275 lb•in 175 lb•in	275 lb•in 275 lb•in
Switches, Mechanisms, and Accessory Kits		Zinc-plated steel, RoHS Compliant finish					

(1) See lug instructions or switch label.
(2) The rating for 1 N.O., 200 A is B600.

Approximate Dimensions

Universal Disconnect Switch and Fuse Block, 30...60 A

Approximate dimensions are shown in inches. Dimensions are not intended to be used for manufacturing purposes.

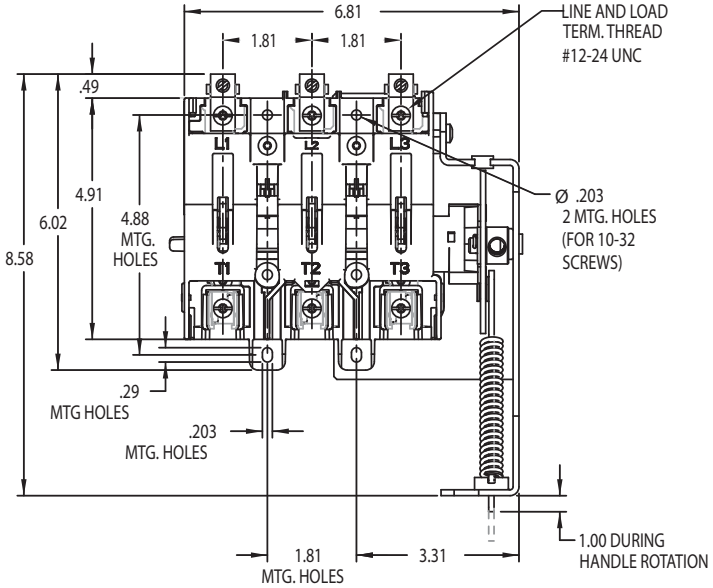

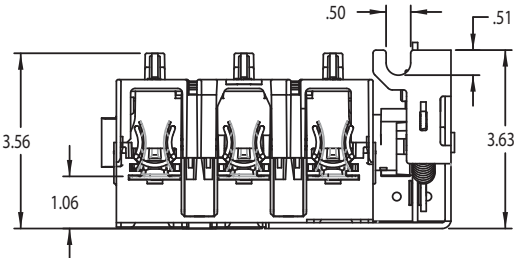

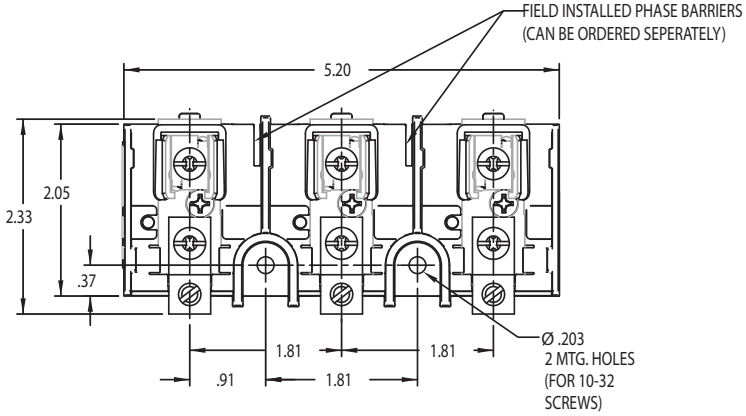

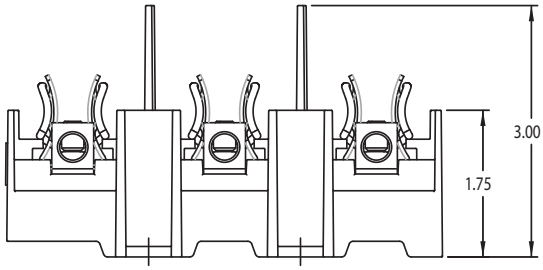

Universal Disconnect Switch and Fuse Block, 100 A

Approximate dimensions are shown in inches. Dimensions are not intended to be used for manufacturing purposes.

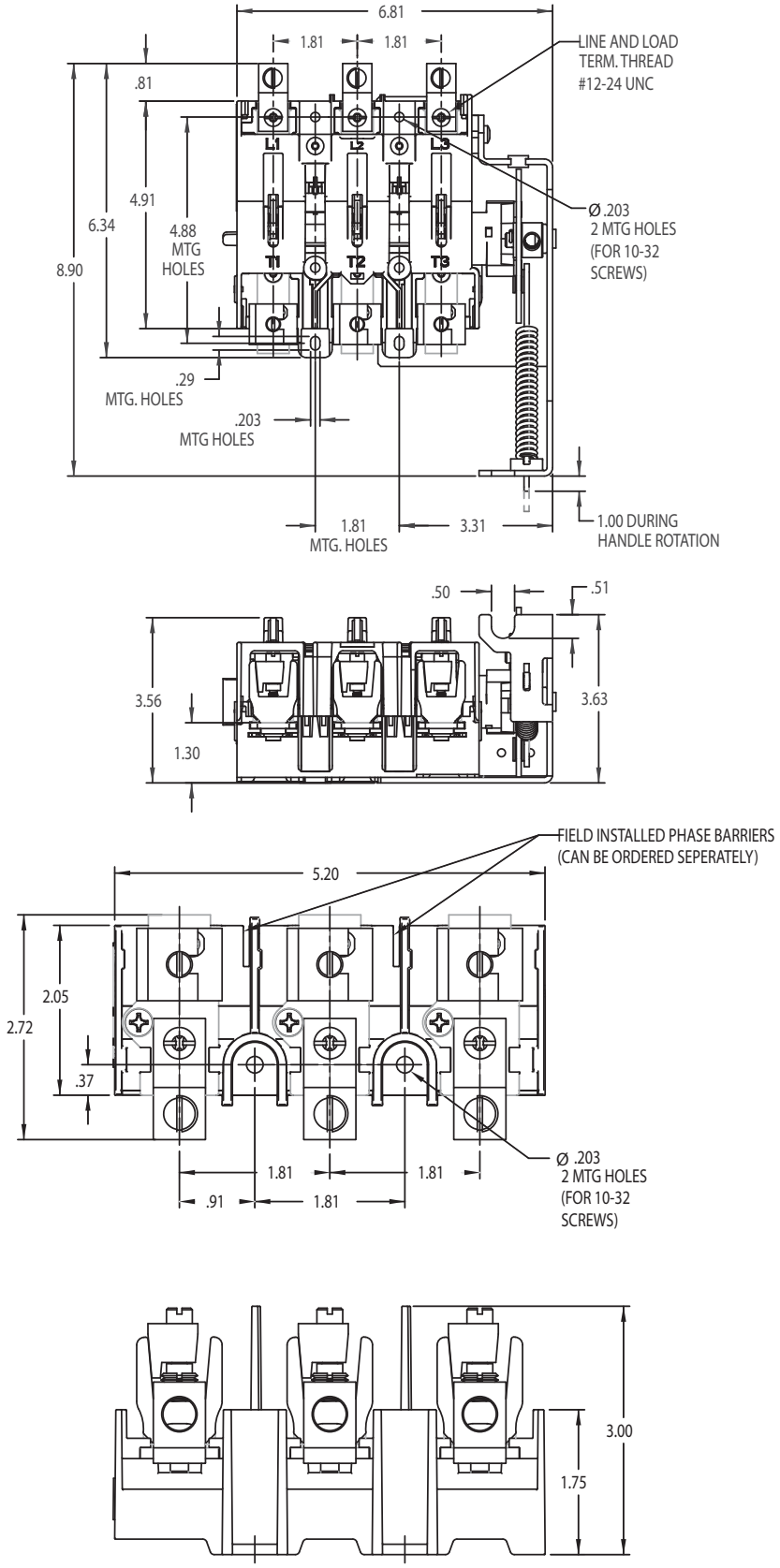

Universal Disconnect Switch and Fuse Block, 200 A

Approximate dimensions are shown in inches. Dimensions are not intended to be used for manufacturing purposes.

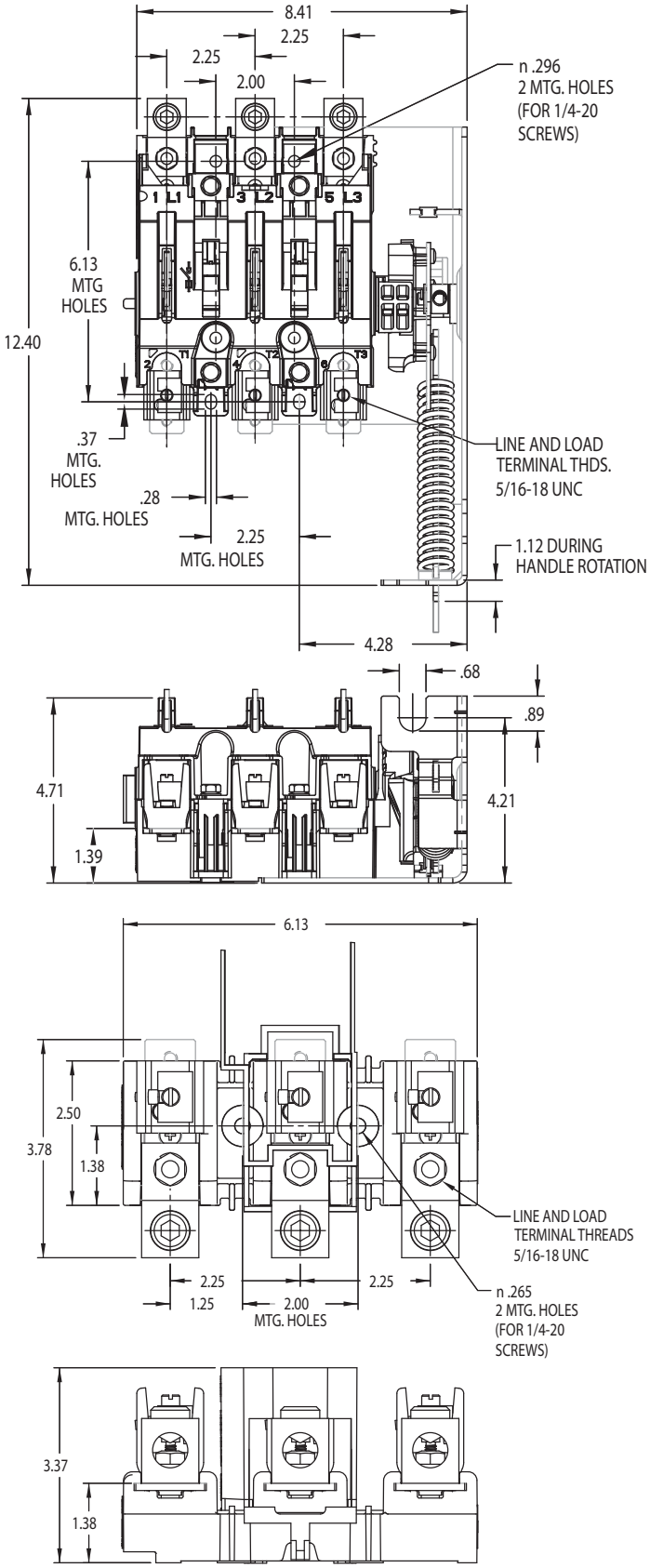

Universal Disconnect Switch and Fuse Block, 400 A

Approximate dimensions are shown in inches. Dimensions are not intended to be used for manufacturing purposes.

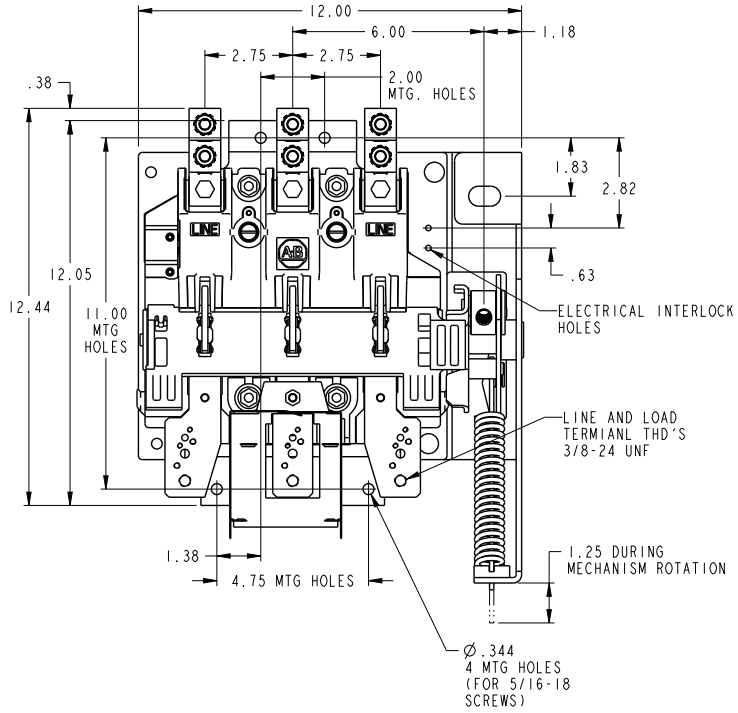

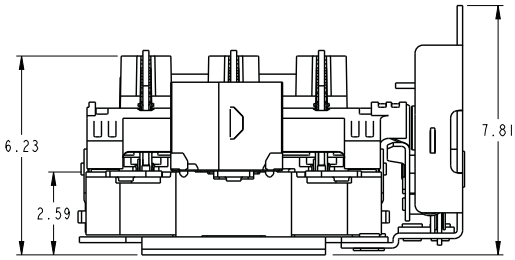

F

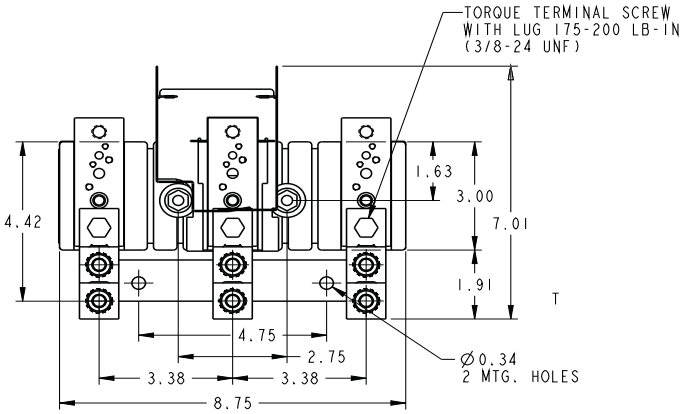

T

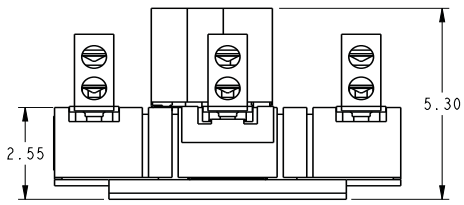

Universal Disconnect Switch and Fuse Block, 600 A

Approximate dimensions are shown in inches. Dimensions are not intended to be used for manufacturing purposes.

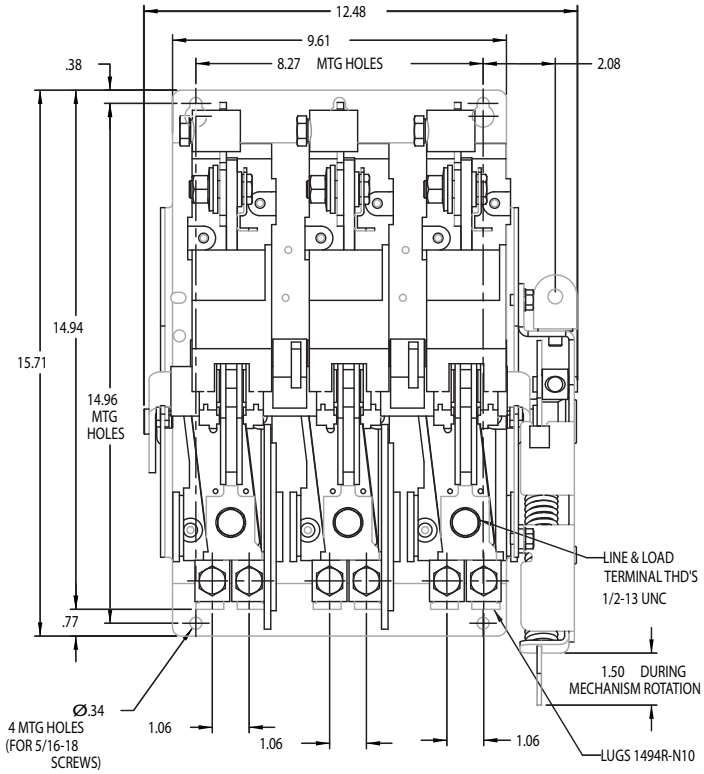

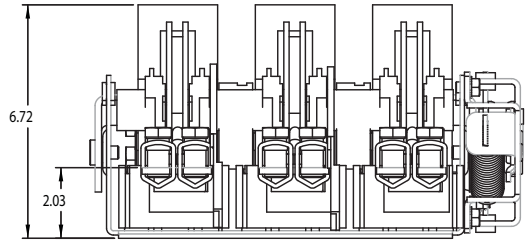

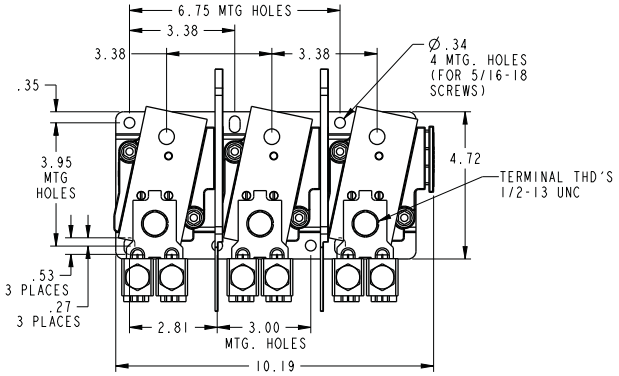

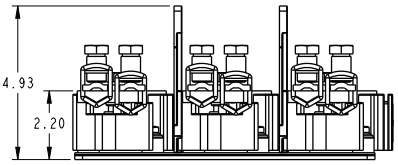

Universal Handle with Support Bracket, 30...200 A

Approximate dimensions are shown in inches. Dimensions are not intended for to be used manufacturing purposes.

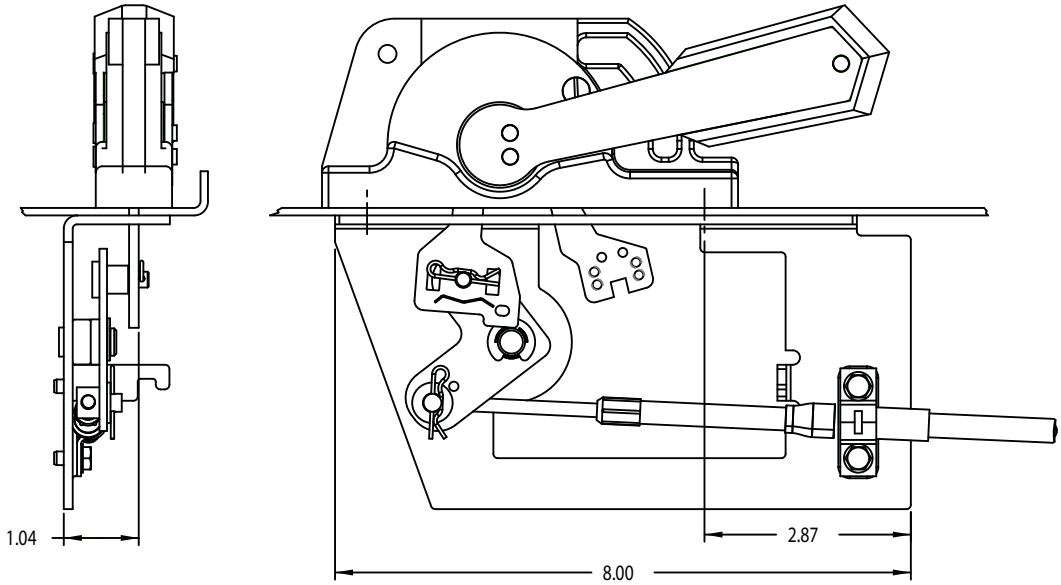

Additional Resources

These documents contain additional information concerning related products from Rockwell Automation.

Resource	Description
Installing Your Main Disconnect Handle Just Became Easy, publication 1494U-AT001	Provides information for disconnect handle installation.
Industrial Automation Wiring and Grounding Guidelines, publication 1770-4.1	Provides general guidelines for installing a Rockwell Automation industrial system.
Product Certifications website, rok.auto/certifications.	Provides declarations of conformity, certificates, and other certification details.

You can view or download publications at rok.auto/literature.

Rockwell Automation Support

Use these resources to access support information.

Technical Support Center	Find help with how-to videos, FAQs, chat, user forums, and product notification updates.	rok.auto/support
Knowledgebase	Access Knowledgebase articles.	rok.auto/knowledgebase
Local Technical Support Phone Numbers	Locate the telephone number for your country.	rok.auto/phonesupport
Literature Library	Find installation instructions, manuals, brochures, and technical data publications.	rok.auto/literature
Product Compatibility and Download Center (PCDC)	Get help determining how products interact, check features and capabilities, and find associated firmware.	rok.auto/pcdc

Documentation Feedback

Your comments help us serve your documentation needs better. If you have any suggestions on how to improve our content, complete the form at rok.auto/docfeedback.

Allen-Bradley, expanding human possibility, QuadConnect, Rockwell Automation, and Rockwell Software are trademarks of Rockwell Automation, Inc.
EtherNet/IP is a trademark of ODVA, Inc.
Trademarks not belonging to Rockwell Automation are property of their respective companies.

Rockwell Automation maintains current product environmental information on its website at rok.auto/pec.

Rockwell Otomasyon Ticaret A.Ş. Kar Plaza İş Merkezi E Blok Kat:6 34752, İçerenköy, İstanbul, Tel: +90 (216) 5698400 EEE YÖnetmeliğine Uygundur

Connect with us.

rockwellautomation.com — expanding **human possibility**™

AMERICAS: Rockwell Automation, 1201 South Second Street, Milwaukee, WI 53204-2496 USA, Tel: (1) 414.382.2000, Fax: (1) 414.382.4444
EUROPE/MIDDLE EAST/AFRICA: Rockwell Automation NV, Pegasus Park, De Kleetlaan 12a, 1831 Diegem, Belgium, Tel: (32) 2 663 0600, Fax: (32) 2 663 0640
ASIA PACIFIC: Rockwell Automation, Level 14, Core F, Cyberport 3, 100 Cyberport Road, Hong Kong, Tel: (852) 2887 4788, Fax: (852) 2508 1846

Publication 1494U-TD001B-EN-P - April 2020
Supersedes Publication 1494U-TD001A-EN-P - September 2018

Copyright © 2020 Rockwell Automation, Inc. All rights reserved. Printed in the U.S.A.