Installation Instructions
42JT VisiSight™ Photoelectric Color Mark Sensors with IO-Link

IMPORTANT: SAVE THESE INSTRUCTIONS FOR FUTURE USE.

Default Settings:

Output Mode: Light Operate (Output ON when the color mark is detected after being taught)
Output Type: PNP or NPN (Push-Pull) or IO-Link

Sensor User Interface

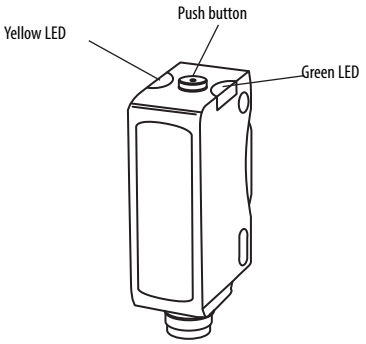

LED Status

The table below provides LED status in the RUN mode i.e., during operation, the sensor is always in RUN mode, except when being taught.

Push-Pull PNP/NPN Operation

Green	OFF	Power is OFF
	ON	Power is ON
	Flashing (1.5 Hz)	Output short circuit protection active
Yellow*	OFF	Output de-energized
	ON	Output energized

*LED status shown when the load is connected as PNP. The LED status reverses when the load is connected as NPN (e.g. LED is ON when the output is de-energized and OFF when is energized).

IO-Link Operation

Green	OFF	Power is OFF
	Flashing (1 Hz)	Power is ON
Yellow*	OFF	Output de-energized
	ON	Output energized

Mounting the Sensor

Securely mount the sensor on a firm, stable surface or support. An application which is subject to excessive vibration or shifting may cause intermittent operation. For installation convenience, Rockwell Automation offers a wide range of mounting brackets (see the Accessories section for more details).

General Specifications

	42JT-F5LET1-[1]
Environmental	
Certifications	cULus and CE Marked for all applicable directives
Operating Environment	IP67, IP69K, ECOLAB [2]
Vibration	10…55 Hz, 1 mm amplitude, meets or exceeds IEC 60947-5-2
Shock	30 g with 1 ms pulse duration, meets or exceeds IEC 60947-5-2
Operating Temperature [C (F)]	-20…+60° (-4…+140°) [3]
Storage Temperature [C (F)]	-20…+80° (-4…+179°)
Optical	
Light Source	Visible white LED
Sensing Range [mm (in.)]	12 (0.47)
Tolerance [mm (in.)]	+/- 2.5 (+/- 0.1)
Spot Size [mm (in.)]	1 x 4 (0.4 x 0.15)
Adjustments	Push button
Electrical	
Voltage	10…30V DC [4]
Current Consumption	25 mA max.
Sensor Protection	Reverse polarity, short circuit protection
Outputs	
Response Time	50 µs
Output Type	PNP or NPN (Push-Pull)
Output Function	Selectable light operate or dark operate
Output Current	100 mA max.
Output Leakage Current	10 µA max.
Mechanical	
Housing Material	ABS
Lens Material	PMMA
Cover Material	PMMA
Optional Accessories	Mounting brackets, cordsets

1 See Connection Types table.
2 ECOLAB on -P4 and -A2 models only.
3 UL: -20…+50°C (-4…122°F)
4 UL: Class 2 source

Connection Types

Cat. No. Suffix	Description
-A2	2 m cable
-P4	Integral 4-pin pico (M8) QD
-F4	4-pin DC micro (M12) QD on 150 mm (6 in.) pigtail
-Y4	4-pin pico (M8) QD on 150 mm (6 in.) pigtail

Sensor Alignment

Position the 42JT VisiSight contrast sensor so that the distance from the object to the sensor is 12 mm. High reflectivity surfaces can impact the reliability of the color mark detection. We recommend that you angle the sensor 10° to help improve the color mark detection as shown below.

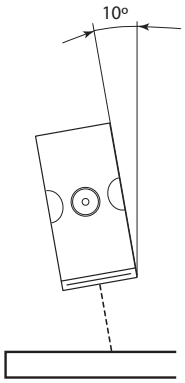

VisiSight™ Configuration

The 42JT VisiSight is configured using the push button or Remote Teach or via IO-Link and the LED indicators on the sensor. There are four features that can be configured:

- Static Teach
- Dynamic Teach (running process)
- Light operate (LO) or dark operate (DO) output
- Push button lock/unlock

The sensor output is disabled during Teach.

Teach

Teaching the color mark is a two step process:

1. Teach the color mark (first condition).

t > 3 s 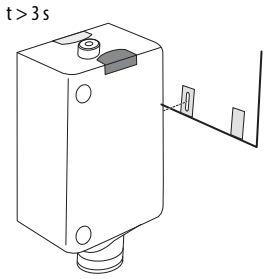	Place the sensor 12 mm (0.47 in.) from the color mark and aim it at the mark. Press and hold the button for three seconds, until the yellow LED starts flashing. Release the button. Although the sensor will operate within a tolerance of +/-2.5 mm (0.1 in.) from the focal distance, the sensor should be installed at 12 mm (0.47 in.) for optimal performance.

2. Teach the background (second condition).

t < 0.5 s 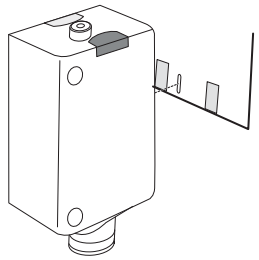	Present the background to the sensor. Press and release the button. The teach process is complete. If the push button is not pressed within 30 seconds, the sensor exits teach mode and returns to RUN mode without learning the new setting. However, if the contrast of the color mark vs. the background is not sufficient (e.g., a yellow mark on a white background) the sensor is unable to detect the color mark. If that is the case, the white LED (light spot) flashes 10 times. A flashing white LED (light spot) indicates the following: Flashes (10 times): insufficient contrast level Flashes (3 times): small contrast level No flashing: good contrast level If the white LED flashes, angle the sensor 10° (see "Sensor Alignment," at left), and repeat the teach process. If the sensor is still unable to detect the color mark and indicates "insufficient contrast level," a higher end sensor may be necessary, such as the 45CRM color mark sensor.

Dynamic Teach (Running Process)

If the targets to be detected are moving with the sensor aimed at the running process, press and hold the button for three seconds, until the yellow LED starts flashing. The color mark will automatically be taught in the next 30 seconds provided the sensor sees two cycles of mark and background.

Teach Light Operate (L.O.) or Dark Operate (D.O.)

The default setting of the output is Light Operate (L.O.: output ON when the color mark is detected after being taught.)

If the application requires the output to turn OFF when the color mark is detected, the setting may be changed to Dark Operate (D.O.)

1. To access the teach output mode setting:

t > 6 s 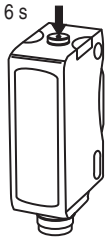	Press and hold button for six seconds, until green LED starts flashing. Release the button. The current setting is indicated by the yellow LED: L.O.: Yellow LED ON D.O.: Yellow LED OFF

2. To change the sensor output mode setting:

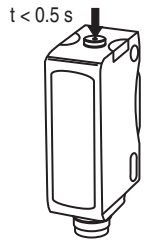	Press and release the button within ten seconds to toggle from L.O. to D.O., the selection indicated by the yellow LED. The sensor retains the setting per the last button depression and returns to the RUN mode ten seconds after the last button is depressed.

Push Button Lock/Unlock

The push button or remote teach (RT) can be used to prevent unauthorized users from changing teach settings.

To lock the push button: press and release the button three times within three seconds. Both LEDs flash synchronously for three seconds indicating that the push button is now locked.

To unlock the push button: press and release the button three times within three seconds. Both LEDs flash asynchronously for three seconds indicating that the push button is now unlocked.

Permanent Lock: The push button may be permanently locked by connecting the white wire (pin 2) to –V.

Remote Teach (RT)

The sensor can be taught remotely via the white wire (pin 2). Connection to +V acts the same as the button being pressed and no connection is the same as the button not being pressed. The sensor can be taught by following the same teach/timing sequence as used in the push button teach. For example, connect to the +V for more than three seconds to align and install the reflector, disconnect from the +V; while the reflector is in the sensor's field of view and there is no target, connect to the +V for less than one second to complete the teach process. All push button functions can also be carried out via RT.

IO-Link

See instructions for IO-Link on www.ab.com. Remote Teach (pin 2) is disabled on IO-Link operation. If output is selected as dedicated NPN, IO-Link communication is unavailable.

Wiring Diagrams

The quick-disconnect connector is shown in the following diagrams. The pin numbers correspond to male connectors on the sensor.

Micro (M12) Male QD on Pigtail and Integral Pico (M8) Male QD

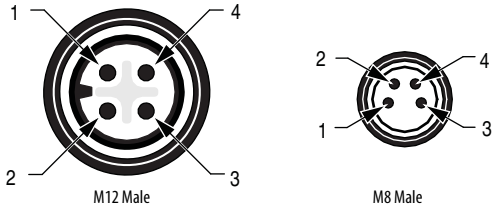

Output Wiring

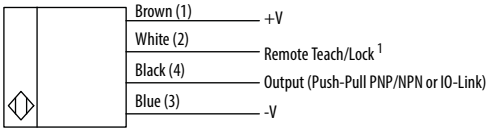

1 **Normal operation**: no connection (disabled in IO-Link operation).
Remote Teach: connect to +V. Refer to the Remote Teach section.
Push button lock: connect to -V. Refer to the Push Button Lock/Unlock section.

Margin Curve

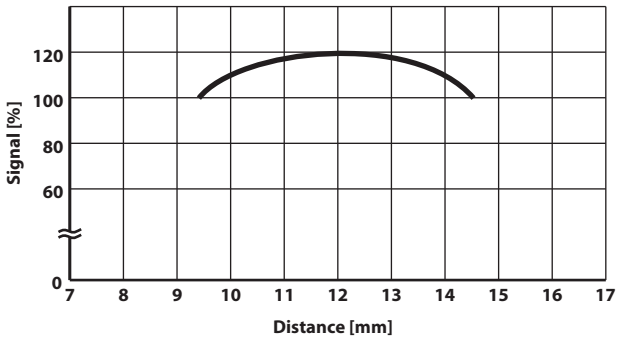

Allen-Bradley • Rockwell Software
Rockwell Automation

Approximate Dimensions [mm (in.)]

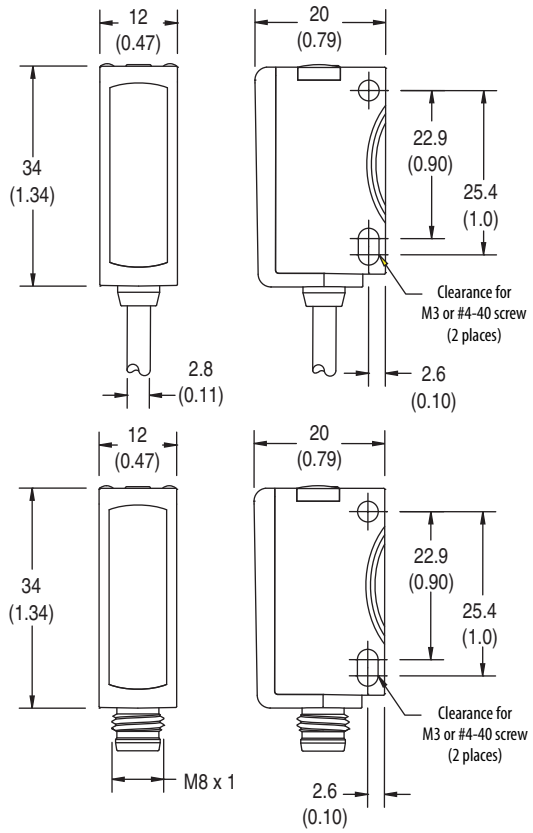

Accessories

Stainless Steel Mounting Brackets

1) 60-BJS-L1

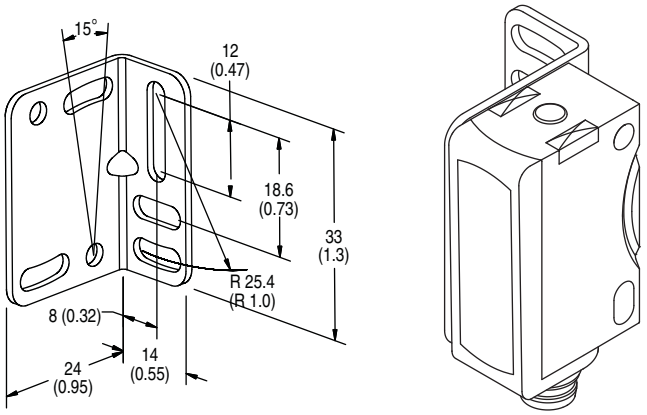

2) 60-BJT-L2

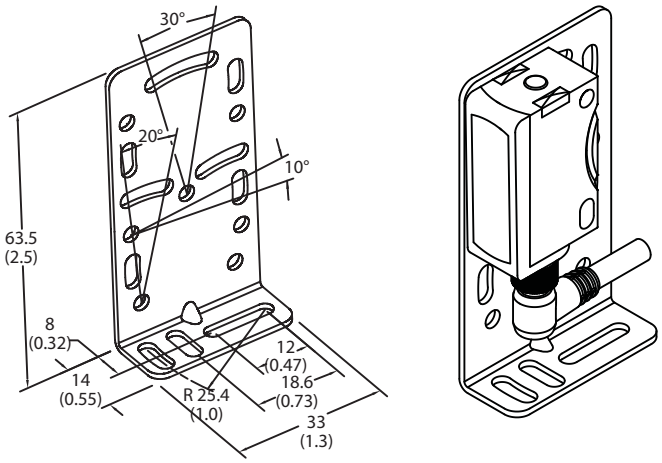

3) 60-2619 VisiSight compatible swivel/tilt mounting bracket

Rockwell Automation maintains current product environmental information on its website at
http://www.rockwellautomation.com/rockwellautomation/about-us/sustainability-ethics/product-environmental-compliance.page.

Allen-Bradley, Rockwell Software, and Rockwell Automation are trademarks of Rockwell Automation, Inc. Trademarks not belonging to Rockwell Automation are property of their respective companies.

Rockwell Otomasyon Ticaret A.Ş., Kar Plaza İş Merkezi E Blok Kat:6 34752 İçerenköy, İstanbul, Tel: +90 (216) 5698400

www.rockwellautomation.com

Power, Control and Information Solutions Headquarters

Americas: Rockwell Automation, 1201 South Second Street, Milwaukee, WI 53204-2496 USA, Tel: (1) 414.382.2000, Fax: (1) 414.382.4444
Europe/Middle East/Africa: Rockwell Automation NV, Pegasus Park, De Kleetlaan 12a, 1831 Diegem, Belgium, Tel: (32) 2 663 0600, Fax: (32) 2 663 0640
Asia Pacific: Rockwell Automation, Level 14, Core F, Cyberport 3, 100 Cyberport Road, Hong Kong, Tel: (852) 2887 4788, Fax: (852) 2508 1846

Publication 42JT-IN005C-EN-P - 10000234774 Ver 02 - September 2015
Supersedes 42JT-IN005B-EN-P - 10000234774 Ver 01 - December 2012

068-14549

Copyright © 2015 Rockwell Automation, Inc. All rights reserved. Printed in the U.S.A.