Installation Instructions
847T 2 in. Diameter Solid Shaft Incremental Encoders

IMPORTANT: SAVE THESE INSTRUCTIONS FOR FUTURE USE.

Selection Guide

847 T - P Y 1 4 - R C 01204
a b c d e f g h

a

Code	Encoder Diameter/Type
T	2 in. diameter, solid shaft

b

Code	Mounting Configuration
D	Standard square flange
H	Standard servo mount
P	5 PY mounting*
*P can be ordered only with option Y from table c	

c

Code	Shaft Size
K	6 mm diameter shaft with flat
L	10 mm diameter shaft with flat
M	1/4 in. diameter shaft with flat
N	3/8 in. diameter shaft with flat
Y	5/8 in. diameter extended shaft with flat**
**Y can be ordered only with option P from table b	

d

Code	Power Supply
1	4.5…5.5V DC
2	8…30V DC

e

Code	Output Configuration
Signal Phasing A-leads-B, Z gated A	
4	4.5…5.5V line driver outputs
5	4.5…5.5V open collector outputs ❶
6	8…30V line driver outputs ❷
7	8…30V open collector outputs ❷
Signal Phasing B-leads-A, Z gated BN	
A	4.5…5.5V line driver outputs
B	4.5…5.5V open collector outputs ❶
C	8…30V line driver outputs ❷
D	8…30V open collector outputs ❷

❶ Options 5 and B cannot be ordered with option 2 from table d.
❷ Options 6, 7, C and D cannot be ordered with option 1 from table d.

f

Code	Connector/Cable Exit
R	Radial exit

g

Code	Connector/Cable Type
A	M12 connector, 8-pin with mating connector
B	M12 connector, 8-pin
C	MS connector, 6-pin with mating connector
D	MS connector, 6-pin
E	MS connector, 7-pin with mating connector
F	MS connector, 7-pin
G	MS connector, 10-pin with mating connector
H	MS connector, 10-pin
P	Cable with 1.5 m (4.92 ft) length
Q	Cable with 5 m (16.4 ft) length
R	Cable with 10 m (32.8 ft) length

h

Code:	Resolution
00001…65536	00001…65536 pulses/revolution

Accessories

Description	Part Number
High-performance flexible coupling ❶	845-FC-*-*
Measuring wheels ❶	845-MW-A-*
Mounting plates ❶	845-MB-*
Servo clamps ❶	845-SC
Pre-wired cables	845-CA-*-*
Mating connectors	845-6P 845-7P 845-7P-RT 845-10P 845-10P-RT
Differential encoder buffer board	845-BB*
M12 cable	889D-F8FB-*

❶Not available for PY mounting
* See http://ab.rockwellautomation.com/Motion-Control/High-Resolution-Incremental-Optical-Encoder for selection.

Specifications

Electrical	
Code format	Incremental, 2 channels with zero index
Signal options, clockwise rotation viewed from shaft end	A-leads-B, 180° marker gated with A, or B-leads-A, 180° marker gated with BN

Electrical (continued)

Signal phase relation	90° ± 22° channels
Symmetry	50% ± 10%
Zero index channel	Gated 1/2 cycle
Supply current	50 mA
Frequency response	4.5…5.5V line driver output: 820 kHz 8…30V line driver output: 820 kHz Open collector: 150 kHz
Resolution	1…65536 pulses/revolution
Load current	30 mA for all output types
Output drivers	4.5…5.5V line driver - IC HD2 8…30V line driver - IC HD2 Open collector - 7406
Electrical protection	Reverse polarity and short circuit for all output types
Cable outer diameter	0.25 in (6.2 mm)
Cable type	300V, 105 °C, 26 AWG, 9-conductor with overall braided shield, UL AWM type 20327 for use in fixed (non-flexing) installations; RoHs compliant
Cable bend radius	Minimum 5x outer diameter

Mechanical

Maximum operating speed	9000 RPM
Angular acceleration	500,000 radians/s^2
Moment of inertia	15 g•cm^2
Startup torque at 20 °C (68 °F)	0.8 N•cm
Operating torque at 20 °C (68 °F)	0.6 N•cm
Approximate weight [kg (lb)]	0.22 (0.50) square flange mounting with M12 connector 0.34 (0.75) PY mounting with M12 connector

Mechanical (continued)

MTTFd (EN ISO 13849-1)	330 years
Shaft loading	80 N radial, 20 mm (0.79 in.) from front bearing and 40 N axial provide L10 life of 3.6 x10^9 revolutions at 9,000 RPM and 80 °C ambient temperature
Shaft diameter [mm (in.)]	6 (0.24), 10 (0.39), 6.4 (0.25), and 9.2 (0.38) diameter for solid shaft encoders 7.94 (0.313) for encoder with PY mounting

Environmental

Enclosure type rating	Shaft: IP65 Housing, connector version with mating connector installed: IP67 Housing, cable version: IP67
Temperature	-30…+80 °C (-22…+176 °F) operating -40…+100 °C (-4…+212 °F) storage
Relative humidity	90% noncondensing
Shock	100 G/11 ms duration
Vibration	30 G/10…2000 Hz
EMC	EN 61000-6-2 and EN 61000-6-3 (M12 connector)
Housing material	EN AC-47100 die-cast aluminum
Housing finish	Powder coat paint, color RAL 9005, Pantone black C (jet black)
Flange material	6061-T6 aluminum
Shaft material	SAE 303 stainless steel
Certifications	RoHS compliant CE Marked for all applicable directives, UL listed only with cable or M12 connections For use in NFPA 79 applications only

Output Waveforms

Complementary signals AN, BN, and ZN are supplied only on units with line driver outputs.

Signals and marker option - A leads B (CW rotation)

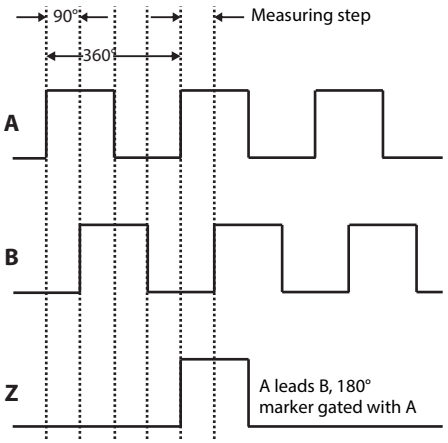

Clockwise rotation when facing encoder shaft

Signals and marker option - B leads A (CW rotation)

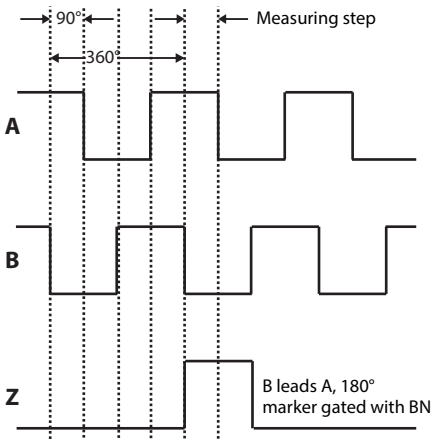

Clockwise rotation when facing encoder shaft

Allen-Bradley • Rockwell Software
Rockwell Automation

Connector Pins and Signal Availability

Signal Name	MS 6-pin	MS 7-pin	MS 10-pin	M12 8-pin	Cable wire colors
V DC	B	D	D	8	Red
Common	A	F	F	7	Black with red band
A output	E	A	A	2	White
AN output	-	-	H	1	Black with white band
B output	D	B	B	4	Blue
BN output	-	-	I	3	Black with blue band
Z output	C	C	C	6	Green
ZN output	-	-	J	5	Black with green band
Zero set input	-	E	E	-	Yellow
Case	F	G	G	-	Black
Encoder connectors	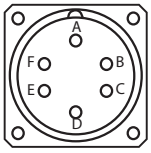	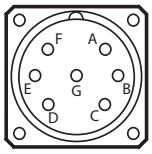	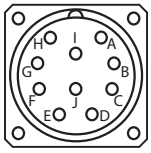	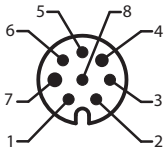	-
Recommended mating cable Cat. No.	**845-CA-A-***	**845-CA-B-***	**845-CA-C-***	**889D-F8FB-***	(Attached to encoder)

Approximate Dimensions [mm (in.)]

Square Flange Mounting with Radial M12 Connector

Shaft Options		
Nominal	Shaft dia., A	Flat dim., B
1/4 in.	6.327/6.312 (0.2491/0.2485)	5.5 (0.22)
3/8 in.	9.507/9.492 (0.3743/0.3737)	8.5 (0.33)
6 mm	6.000/5.988 (0.2362/0.2357)	5.5 (0.22)
10 mm	9.977/9.962 (0.3928/0.3922)	9 (0.35)

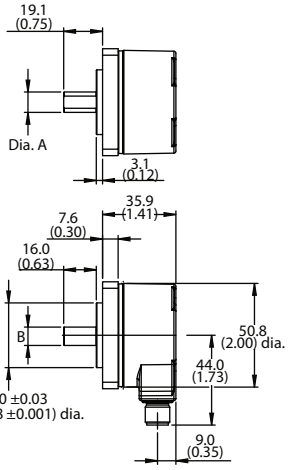

Servo Flange Mounting with Radial M12 Connector

Shaft Options		
Nominal	Shaft dia. A	Flat dim. B
1/4 in.	6.327/6.312 (0.2491/0.2485)	5.5 (0.22)
3/8 in.	9.507/9.492 (0.3743/0.3737)	8.5 (0.33)
6 mm	6.000/5.988 (0.2362/0.2357)	5.5 (0.22)
10 mm	9.977/9.962 (0.3928/0.3922)	9 (0.35)

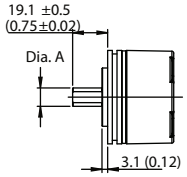

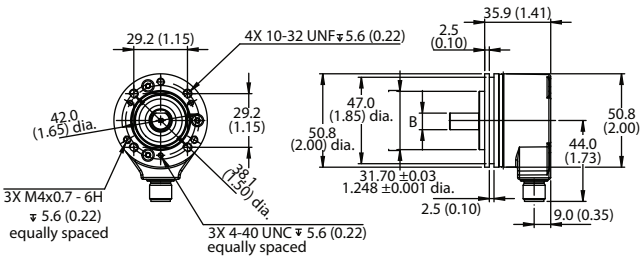

Square Flange Mounting with Radial M12 Connector

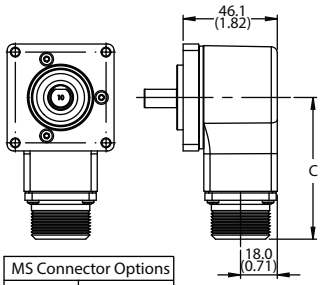

MS Connector Options	
Type	C
6 pin	63.9 (2.52)
7 pin	63.9 (2.52)
10 pin	69.4 (2.73)

Square Flange Mounting with RadialCable

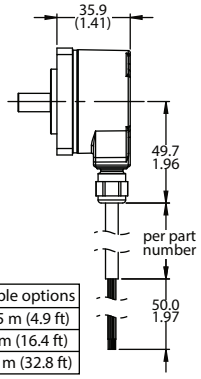

Cable options
1.5 m (4.9 ft)
5 m (16.4 ft)
10 m (32.8 ft)

Servo Flange Mounting with Radial MS Connector

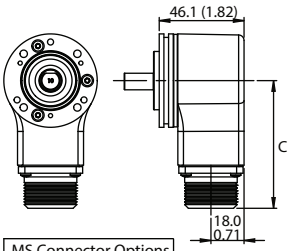

MS Connector Options	
Type	C
6 pin	63.9 (2.52)
7 pin	63.9 (2.52)
10 pin	69.4 (2.73)

Servo Flange Mounting with Radial Cable

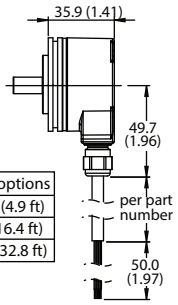

Cable options
1.5 m (4.9 ft)
5 m (16.4 ft)
10 m (32.8 ft)

Allen-Bradley • Rockwell Software
Rockwell Automation

Approximate Dimensions [mm (in.)] (continued)

PY Flange Mounting with Radial M12 Connector

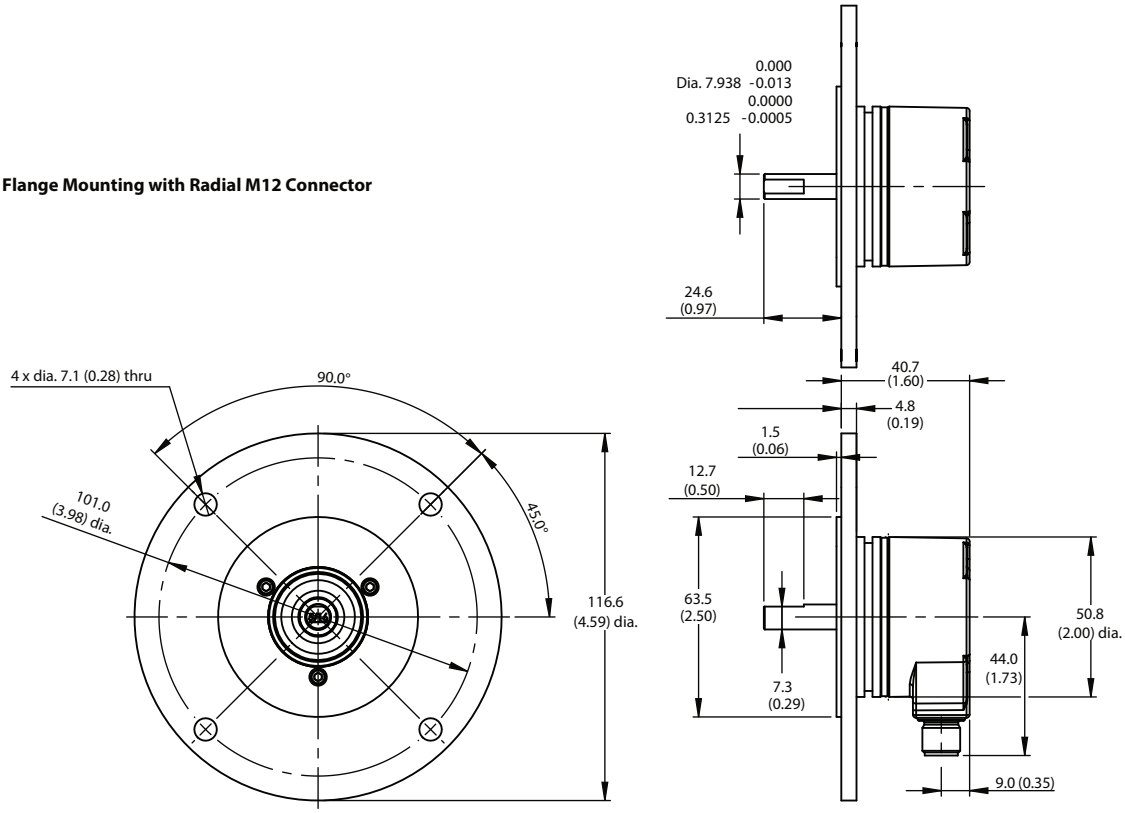

PY Flange Mounting with Radial MS Connector

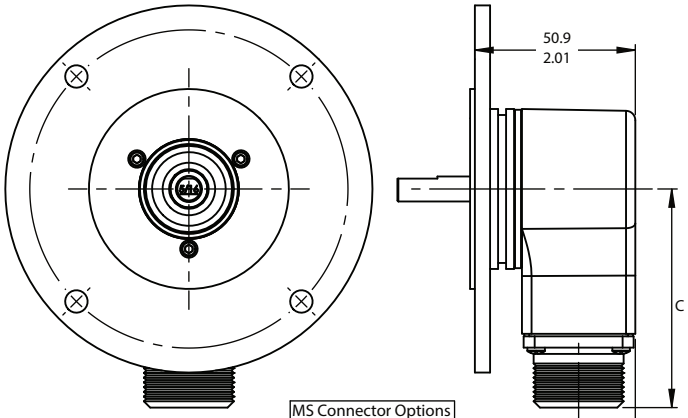

MS Connector Options	
Type	C
6 pin	63.9 (2.52)
7 pin	63.9 (2.52)
10 pin	69.4 (2.73)

PY Flange Mounting with Radial Cable

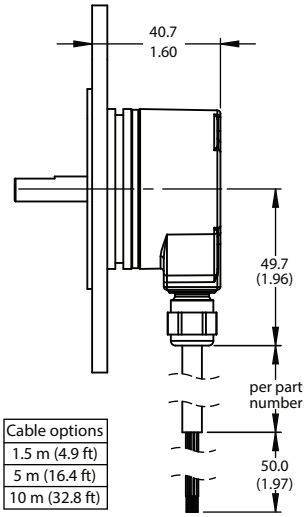

Cable options
1.5 m (4.9 ft)
5 m (16.4 ft)
10 m (32.8 ft)

Rockwell Automation maintains current product environmental information on its website at
http://www.rockwellautomation.com/rockwellautomation/about-us/sustainability-ethics/product-environmental-compliance.page.

www.rockwellautomation.com

Power, Control and Information Solutions Headquarters

Americas: Rockwell Automation, 1201 South Second Street, Milwaukee, WI 53204-2496 USA, Tel: (1) 414.382.2000, Fax: (1) 414.382.4444
Europe/Middle East/Africa: Rockwell Automation NV, Pegasus Park, De Kleetlaan 12a, 1831 Diegem, Belgium, Tel: (32) 2 663 0600, Fax: (32) 2 663 0640
Asia Pacific: Rockwell Automation, Level 14, Core F, Cyberport 3, 100 Cyberport Road, Hong Kong, Tel: (852) 2887 4788, Fax: (852) 2508 1846

Publication 847T-IN001B-EN-P - March 2016 10001065811 Ver 01

Supersedes Publication 847T-IN001A-EN-P - July 2014

Copyright © 2016 Rockwell Automation, Inc. All rights reserved. Printed in the U.S.A.