Installation Instructions

DeviceNet ArmorBlock Network Powered 8-input/8-output Module

Catalog Number 1732D-8I8O1212D

Topic	Page
Important User Information	2
Environment and Enclosure	3
Prevent Electrostatic Discharge	3
About the Module	4
Install the Module	5
Mount the Module	6
Communicate with Your Module	11
Interpret the Status Indicators	12
Specifications	14

Allen-Bradley • Rockwell Software

Rockwell Automation

Important User Information

Solid state equipment has operational characteristics differing from those of electromechanical equipment. Safety Guidelines for the Application, Installation and Maintenance of Solid State Controls (Publication SGI-1.1 available from your local Rockwell Automation sales office or online at http://literature.rockwellautomation.com) describes some important differences between solid state equipment and hard-wired electromechanical devices. Because of this difference, and also because of the wide variety of uses for solid state equipment, all persons responsible for applying this equipment must satisfy themselves that each intended application of this equipment is acceptable.

In no event will Rockwell Automation, Inc. be responsible or liable for indirect or consequential damages resulting from the use or application of this equipment.

The examples and diagrams in this manual are included solely for illustrative purposes. Because of the many variables and requirements associated with any particular installation, Rockwell Automation, Inc. cannot assume responsibility or liability for actual use based on the examples and diagrams.

No patent liability is assumed by Rockwell Automation, Inc. with respect to use of information, circuits, equipment, or software described in this manual.

Reproduction of the contents of this manual, in whole or in part, without written permission of Rockwell Automation, Inc., is prohibited.

Throughout this manual, when necessary, we use notes to make you aware of safety considerations.

WARNING	Identifies information about practices or circumstances that can cause an explosion in a hazardous environment, which may lead to personal injury or death, property damage, or economic loss.
IMPORTANT	Identifies information that is critical for successful application and understanding of the product.
ATTENTION	Identifies information about practices or circumstances that can lead to personal injury or death, property damage, or economic loss. Attentions help you identify a hazard, avoid a hazard and recognize the consequences.
SHOCK HAZARD	Labels may be located on or inside the equipment (for example, drive or motor) to alert people that dangerous voltage may be present.
BURN HAZARD	Labels may be located on or inside the equipment (for example, drive or motor) to alert people that surfaces may be dangerous temperatures.

Environment and Enclosure

ATTENTION

This equipment is intended for use in overvoltage Category II applications (as defined in IEC 60664-1), at altitudes up to 2000 meters (6562 ft) without derating.

This equipment is considered Group 1, Class A industrial equipment according to IEC/CISPR 11. Without appropriate precautions, there may be difficulties with electromagnetic compatibility in residential and other environments due to conducted and radiated disturbances.

This equipment is supplied as enclosed equipment. It should not require additional system enclosure when used in locations consistent with the enclosure type ratings stated in the Specifications section of this publication. Subsequent sections of this publication may contain additional information regarding specific enclosure type ratings, beyond what this product provides, that are required to comply with certain product safety certifications.

In addition to this publication, see:

- Industrial Automation Wiring and Grounding Guidelines, Allen-Bradley publication 1770-4.1, for additional installation requirements.
- NEMA Standards 250 and IEC 60529, as applicable, for explanations of the degrees of protection provided by different types of enclosure.

Prevent Electrostatic Discharge

ATTENTION

This equipment is sensitive to electrostatic discharge, which can cause internal damage and affect normal operation. Follow these guidelines when you handle this equipment.

- Touch a grounded object to discharge potential static.
- Wear an approved grounding wriststrap.
- Do not touch connectors or pins on component boards.
- Do not touch circuit components inside the equipment.
- Use a static-safe workstation, if available.
- Store the equipment in appropriate static-safe packaging when not in use.

About the Module

The DeviceNet 1732D ArmorBlock I/O family consists of stand-alone 24V DC I/O modules that communicate via the DeviceNet network. The sealed IP69K housing of these modules requires no enclosure. Note that it is possible that environmental requirements other than IP69K require an additional appropriate enclosure. I/O connectors are sealed M12 style.

The DeviceNet network uses advanced network technology, producer/consumer communication, to increase network functionality and throughput. Visit our web site at http://www.ab.com/networks for producer/consumer technology information and updates.

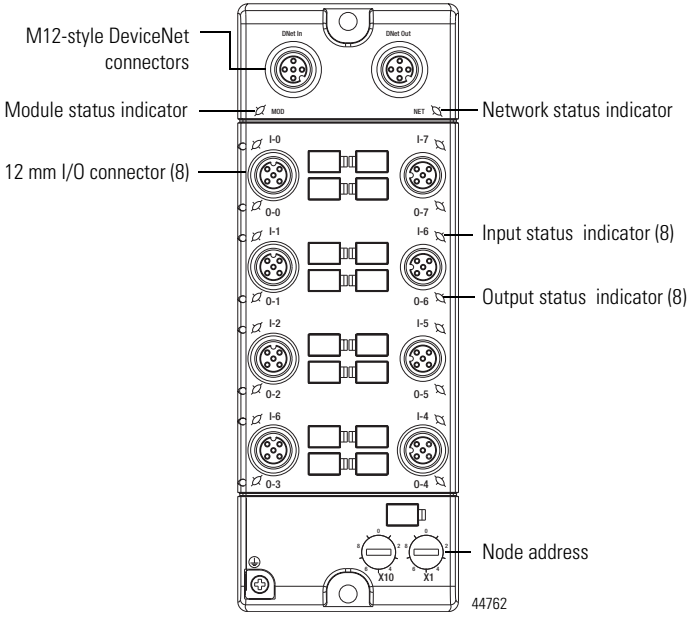

Catalog Number Explanation

The catalog number 1732D-8I8O1212D identifies a DeviceNet 24V DC 8-port, with one input and one output per port, 8-input 8-output 0.5 A M12-style network connector module.

Install the Module

To install the module:

- Set the node address
- Mount the module
- Connect the cord sets

Set the Node Address

Valid node addresses are 00 through 63.

Set the node address using either the rotary switches, RSNetWorx for DeviceNet, DeviceNetManager, or another software configuration tool. Setting the switches at any number from 64 through 99 lets the software have address control.

Each module is shipped set for node address 63. Remove the caps on the front of the module to access the switches. The two switches are:

- X10 (most significant digit) - left side of module
- X1 (least significant digit) - right side of module

To reset the node address:

1. Rotate the switches using a small blade screwdriver.
2. Line up the small black dot on the switch with the number setting you wish to use.
3. Cycle power.

Example shows default node address set at 63.

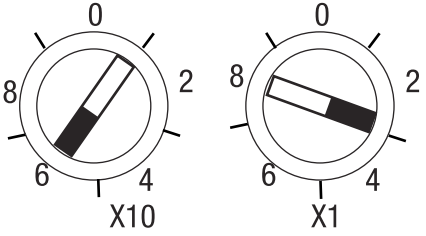

43968

The rotary switches are read periodically. If the switches have been changed since the last time they were read and they no longer match the online address, a minor fault occurs, which is indicated by a flashing red MOD LED.

Settings of 64 through 99 cause the module to use the last valid node address stored internally. For example, the last setting internally was 40. If a change is made to 68, and then you power up, the address defaults to 40.

The module is equipped with AutoBaud detect. AutoBaud lets the module read the settings already in use on your DeviceNet network and automatically adjusts to those settings.

Mount the Module

Two sets of mounting holes are used to mount the module directly to a panel or machine. Mounting holes accommodate #6 (M3) pan head screws. The torque specification is 0.64 Nm (6 in-lb).

Product Dimensions

Refer to the mounting dimensions illustration to help you mount the module.

Module Dimensions

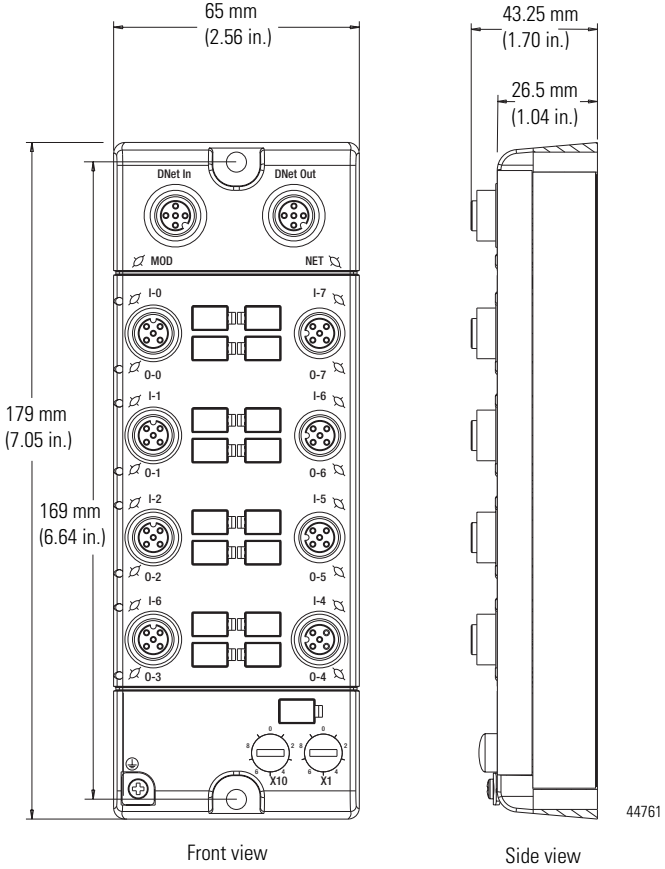

Mounting the Module in High Vibration Areas

If you mount the module in an area that is subject to shock or vibration, we recommend that you use a flat and a lock washer to mount the module. Mount the flat and the lock washer as shown in the mounting illustration. Torque the mounting screws to 0.64 Nm (6 in-lb).

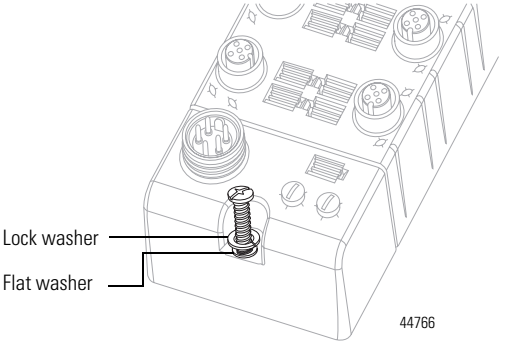

Connect the I/O Cord Sets to the Module

The ArmorBlock DeviceNet family has 5-pin micro-style connectors.

We provide caps to cover the unused connectors on your module.
Connect the quick-disconnect cord sets that you selected for your module to the appropriate ports.

Network Connector

Refer to the pinout diagram for the network connector.

M12-style Input Connectors

Male

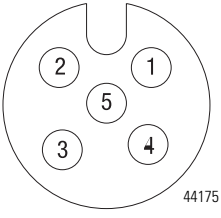

(View into Connector)

Pin 1	Drain
Pin 2	V+ (Red)
Pin 3	V- (Black)
Pin 4	CAN_H (White)
Pin 5	CAN_L (Blue)

Female

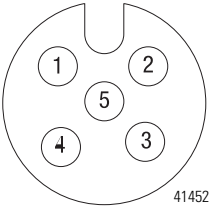

I/O Connector

Refer to the pinout diagram for the I/O connector.

M12-style 5-pin Female Input Connector

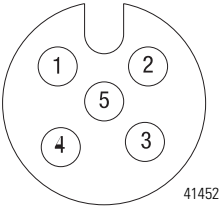

(View into Connector)

Pin 1	Sensor Source Voltage
Pin 2	Output
Pin 3	Return
Pin 4	Input
Pin 5	PE

Refer to publication M116-CA001 for Rockwell Automation cable and cord set offerings or access the Connection Systems website at http://www.ab.com/sensors/products/connection_systems/.

ATTENTION

If any I/O devices connected to this equipment require Class 2 power to operate, this equipment and all connected I/O must be powered by a Class 2 source.

To comply with the CE Low Voltage Directive (LVD), this equipment and all connected I/O must be powered from a source compliant with the following: Safety Extra Low Voltage (SELV) or Protected Extra Low Voltage (PELV).

ATTENTION

Make sure all connectors and caps are securely tightened to properly seal the connections against leaks and maintain IP enclosure type requirements.

Communicate with Your Module

This module's I/O is exchanged with the master through a cyclic, polled, or change-of-state connection.

Cyclic - allows configuration of the block as an I/O client. The block will produce and consume its I/O cyclically at the rate configured.

Polled - a master initiates communication by sending its polled I/O message to the module. The module consumes the message, updates outputs, and produces a response. The response has input data.

Change-of-State - productions occur when an input changes or a fault condition occurs. If no input or fault condition change occurs within the expected packet rate, a heartbeat production occurs. This heartbeat production tells the scanner module that the I/O module is alive and ready to communicate. Consumption occurs when data changes and the master produces new output data to the I/O block.

Refer to the Module Data Definitions table for more information.

1732-8I8O1212D Data Definitions

Byte	Bit 7	Bit 6	Bit 5	Bit 4	Bit 3	Bit 2	Bit 1	Bit 0
Produce 0	I7	I6	I5	I4	I3	I2	I1	I0
Produce 1	In short	Out short						
Consume 0	O7	O6	O5	O4	O3	O2	O1	O0
Where:	I=Input Data; 0=Off, 1=On In Short 0=Working, 1=Sensor Source Voltage Fault Out Short 0=Working, 1=Output Fault (Short) O=Output Data; 0=Off, 1=On							

Interpret the Status Indicators

This module has the following indicators:

- Network status indicator for DeviceNet
- Module status indicator for DeviceNet
- Individual I/O status indicators for inputs and outputs

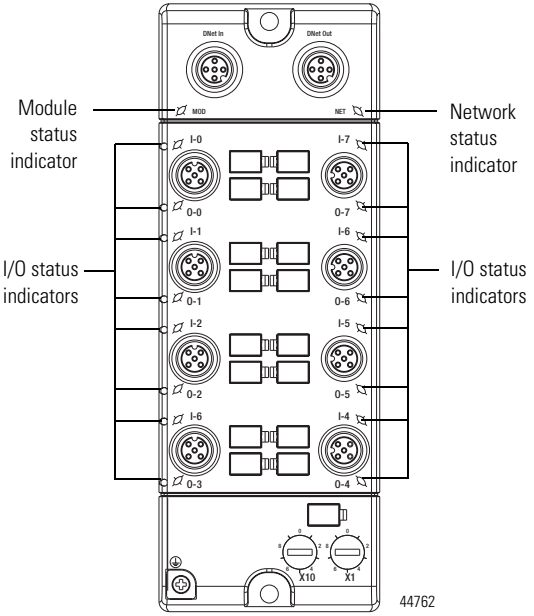

Indicator	Status	Description
Network status	Off	Device is not online. - Device has not completed dup_MAC-id test. - Device not powered – check module status indicator.
	Green	Device operating normally and is online with connections in the established state. As a Group 2 module, it means that the module is allocated to a master.
	Flashing green	Device is online with no connections in the established state.
	Red	Critical link failure – failed communications module.
	Flashing red	Recoverable fault – an I/O connection has timed out.
Module status	Off	No power applied to the device.
	Green	Device is operating normally.
	Flashing green	Device needs commissioning due to missing, incomplete, or incorrect configuration.
	Flashing red	Recoverable fault – input or output short circuit.
	Red	Critical fault – Device timed out or has an unrecoverable fault.
I/O status	Off	Output is not energized or input is not valid.
	Yellow	Output is energized or input is valid.

Specifications

DeviceNet 1732 ArmorBlock Network Powered 8-input/8-output Module, Series A - 1732D-8I8O1212D Inputs

Attribute	Value
Number of inputs	8
Off-state input voltage, max	5V DC
On-state input voltage, max	25V DC
On-state input voltage, nom	24V DC
On-state input voltage, min	11V DC
Sensor source voltage, max	25V DC
Sensor source voltage, min	11V DC
Off-state input current, max	1.5 mA @ 5V DC
On-state input current, max	5 mA @ 25V DC
Input delay time[1] OFF to ON ON to OFF	0…16000 µs

(1) Input OFF to ON or ON to OFF delay is time from a valid input signal to recognition by the module.

DeviceNet 1732 ArmorBlock Network Powered 8-input/8-output Module, Series A - 1732D-8I8O1212D Outputs

Attribute	Value
Number of outputs	8
On-state output voltage drop, max	0.5V DC
Off-peak blocking voltage, min	25V DC
On-state output voltage, max	25V DC
On-state output voltage, min	11V DC
On-state output voltage, nom	24V DC
On-state output current, max	0.5 A
Current per module, max	4 A (all outputs)
Off-state output leakage current, max	50 μA
Surge current per output, max	1.2 A for 10 ms, repeatable every 2 s

General Specifications

Attribute	Value
Power consumption	2.2 W
Power dissipation	11.2 btu/h
Isolation voltage	No isolation
DeviceNet power voltage, max	25V DC
DeviceNet power voltage, min	11V DC
DeviceNet current	100 mA plus sum of sensor and output currents
Sensor source current per module, max	500 mA
Communication rate	125 Kbps @ 500 m (1640 ft) for thick cable, flat media length 375 m (1230 ft) 250 Kbps @ 200 m (600 ft) for thick cable, flat media length 150 m (492 ft) 500 Kbps @ 100 m (330 ft) for thick cable, flat media length 75 m (246 ft)
Pilot duty rating	Not rated
Enclosure type rating	Meets IP65/66/67/69K (when marked), and NEMA 4X/6P with receptacle dust caps or cable termination
Wiring category[(1)]	1 - on signal ports 1 - on power ports 2 - on communications ports
Indicators	1 green/red module status 1 green/red network status 8 yellow input status and 8 yellow output status
Dimensions (HxWxD), approx.	179 x 65 x 43.25 mm (7.05 x 2.56 x 1.70 in.)
Weight, approx.	0.392 kg (0.864 lb)

(1) Use this Conductor Category information for planning conductor routing. Refer to Industrial Automation Wiring and Grounding Guidelines, publication 1770-4.1.

Environmental Specifications

Attribute	Value
Temperature, operating	IEC 60068-2-1 (Test Ad, Operating Cold), IEC 60068-2-2 (Test Bd, Operating Dry Heat), IEC 60068-2-14 (Test Nb, Operating Thermal Shock): -20…60 °C (-4…140 °F)
Temperature, non-operating	IEC 60068-2-1 (Test Ab, Un-packaged Non-operating Cold), IEC 60068-2-2 (Test Bb, Un-packaged Non-operating Dry Heat), IEC 60068-2-14 (Test Na, Un-packaged Non-operating Thermal Shock): -45…85 °C (-49…185 °F)
Relative humidity	IEC 60068-2-30 (Test Db, Un-packaged Damp Heat): 5…95% non-condensing
Vibration	IEC60068-2-6 (Test Fc, Operating): 5 g @ 10…500 Hz
Shock, operating	IEC60068-2-27 (Test Ea, Unpackaged Shock): 30 g
Shock, non-operating	IEC60068-2-27 (Test Ea, Unpackaged Shock): 50 g
Emissions	CSPR 11: Group 1, Class A
ESD immunity	IEC 61000-4-2: 8 kV contact dischargess 8 kV air discharges
Radiated RF immunity	IEC 61000-4-3: 10V/m with 1 kHz sine-wave 80% AM from 80…2000 MHz 10V/m with 200 Hz 50% Pulse 100% AM at 900 MHz 10V/m with 200 Hz 50% Pulse 100% AM at 1890 MHz 1V/m with 1 kHz line-wave 80% AM from 2000…2700 MHz

Environmental Specifications (Continued)

Attribute	Value
EFT/B immunity	IEC 61000-4-4: ±3 kV at 5 kHz on power ports ±3 kV at 5 kHz on signal ports ±2 kV at 5 kHz on communications ports
Surge transient immunity	IEC 61000-4-5: ±1 kV line-line(DM) and ±2 kV line-earth(CM) on power ports ±1 kV line-line(DM) and ±2 kV line-earth(CM) on signal ports ±2 kV line-earth(CM) on communications ports
Conducted RF immunity	IEC 61000-4-6: 10V rms with 1 kHz sine-wave 80% AM from 150…80000 kHz

Certifications

Certification (when product is marked)[1]	Value
c-UL-us	UL Listed Industrial Control Equipment, certified for US and Canada. See UL File E322657.
CE	European Union 2004/108/EC EMC Directive, compliant with: EN 61326-1; Meas./Control/Lab., Industrial Requirements EN 61000-6-2; Industrial Immunity EN 61000-6-4; Industrial Emissions EN 61131-2; Programmable Controllers (Clause 8, Zone A & B)
C-Tick	Australian Radiocommunications Act, compliant with: AS/NZS CISPR 11; Industrial Emissions
ODVA	ODVA conformance tested to DeviceNet specifications

(1) See the Product Certification link at http://www.ab.com for Declaration of Conformity, Certificates, and other certification details.

Rockwell Automation Support

Rockwell Automation provides technical information on the Web to assist you in using its products. At http://support.rockwellautomation.com, you can find technical manuals, a knowledge base of FAQs, technical and application notes, sample code and links to software service packs, and a MySupport feature that you can customize to make the best use of these tools.

For an additional level of technical phone support for installation, configuration, and troubleshooting, we offer TechConnect support programs. For more information, contact your local distributor or Rockwell Automation representative, or visit http://support.rockwellautomation.com.

Installation Assistance

If you experience a problem within the first 24 hours of installation, please review the information that's contained in this manual. You can also contact a special Customer Support number for initial help in getting your product up and running.

United States	1.440.646.3434 Monday – Friday, 8 a.m. – 5 p.m. EST
Outside United States	Please contact your local Rockwell Automation representative for any technical support issues.

New Product Satisfaction Return

Rockwell Automation tests all of its products to ensure that they are fully operational when shipped from the manufacturing facility. However, if your product is not functioning and needs to be returned, follow these procedures.

United States	Contact your distributor. You must provide a Customer Support case number (see phone number above to obtain one) to your distributor in order to complete the return process.
Outside United States	Please contact your local Rockwell Automation representative for the return procedure.

Allen-Bradley, ArmorBlock, RSNetWorx for DeviceNet, DeviceNetManager, Rockwell Automation, and TechConnect are trademarks of Rockwell Automation, Inc.
Trademarks not belonging to Rockwell Automation are property of their respective companies.

www.rockwellautomation.com

Power, Control and Information Solutions Headquarters

Americas: Rockwell Automation, 1201 South Second Street, Milwaukee, WI 53204-2496 USA, Tel: (1) 414.382.2000, Fax: (1) 414.382.4444
Europe/Middle East/Africa: Rockwell Automation, Vorstlaan/Boulevard du Souverain 36, 1170 Brussels, Belgium, Tel: (32) 2 663 0600, Fax: (32) 2 663 0640
Asia Pacific: Rockwell Automation, Level 14, Core F, Cyberport 3, 100 Cyberport Road, Hong Kong, Tel: (852) 2887 4788, Fax: (852) 2508 1846

Publication 1732D-IN010A-EN-E - April 2009 PN-43626

Copyright © 2009 Rockwell Automation, Inc. All rights reserved.