Technical Data

Original Instructions

FLEXHA 5000 I/O System Specifications

Catalog Numbers

Universal I/O Module	5015-U8IHFTXT
EtherNet/IP Adapter	5015-AENFTXT
Power Conditioner	5015-PB100FTXT
Adapter Base	5015-A2AXT
I/O Base	5015-A4IOXT
Media Landing Card	5015-MLTRXT
Backplane Interface Module	5015-BIMXT
Bank Expansion Bases	5015-BEBLXT, 5015-BEBRXT
Backplane Communication Extension Cable	5015-BECCOMXT
Backplane Power Extension Cable	5015-BECPWRXT
Fillers	5015-N2IOXT, 5015-N2SAXT, 5015-N2RTBXT
Back Plate Grounding Lug	5015-BPGNDXT
Mounting Plates	5015-MP300XT, 5015-MP700XT, 5015-MP900XT, 5015-MP1250XT
Removable Terminal Blocks	5015-RTBPWPXT, 5015-RTBPXT, 5015-RTBRPXT, 5015-RTBSAJXT, 5015-STBPXT
End Cap	5015-ECRXT

Topic	Page
I/O Modules	3
EtherNet/IP Adapters	15
Media Landing Cards	16
Power Conditioner	17
Accessories	19
Minimum Spacing Requirements	29
Additional Resources	31

System Overview

A FLEXHA 5000™ I/O system is a fault-tolerant I/O system. An EtherNet/IP™ adapter pair and I/O modules in a Duplex configuration provide High Availability (HA) for communications and I/O portions of the system. A Simplex configuration of the I/O modules, where only one module obtains the field signal, maintains HA for the communications but does not provide HA in the I/O signal.

The HA concept uses device and network duplication to establish redundancy in the system and maintain control in the event of a faulted HA device. A faulted redundant system component can be serviced while the control application continues to operate.

I/O Modules

5015-U8IHFTXT

The FLEXHA 5000™ 8-channel Universal I/O module is a fault-tolerant I/O module with eight isolated channels that can individually be configured to function as digital inputs, digital outputs, analog inputs, or analog outputs. For channels that are configured as analog input or analog output, HART functionality is also available. The I/O modules reside on an I/O base, catalog number 5015-A4IOXT.

Wiring Diagrams

This section provides the following example diagrams:

- Analog Input Wiring Diagrams
- Analog Output Wiring Diagrams
- Digital Input Wiring Diagrams
- Digital Output Wiring Diagrams

IMPORTANT

- Rows A...D are part of the I/O removable terminal block (RTB). The shield terminal block (STB), catalog number 5015-STBPXT, at the bottom of each diagram is the shield terminal block that is installed on the mounting plate chase below the I/O modules.
- The FLEXHA 5000 I/O system uses shielding constructs identical to EtherNet/IP™ systems, for example, as used with DLR ports. The STB has eight individually isolated resistor-capacitor (RC)-MOV terminations that provide EMI noise mitigation. The STB introduces an embedded RC filter that improves shielding performance through termination at multiple terminals without introducing the risk of ground loops. The RC terminations **do not** earth the shield and you **cannot** use them to claim conformance to any safety agencies.
  For some installations, for example, Ex installations, more restrictive grounding can be required and the cable shields can be terminated directly to the mounting plate screw chase. To terminate the shields directly to the mounting screw chase, use an ST 4.8 screw and an appropriately sized wire crimp eyelet.

  We recommend that all shielded cables be terminated on the module side to the STB and terminate the device side shield directly to earth. If you do not use the STB, directly ground the cable shield to earth at one point. Do not use the STB without additional ground termination at the other end.

Analog Input Wiring Diagrams

Figure 1 - Analog Inputs 2-wire and 3-wire Current Mode with Internal Loop Power

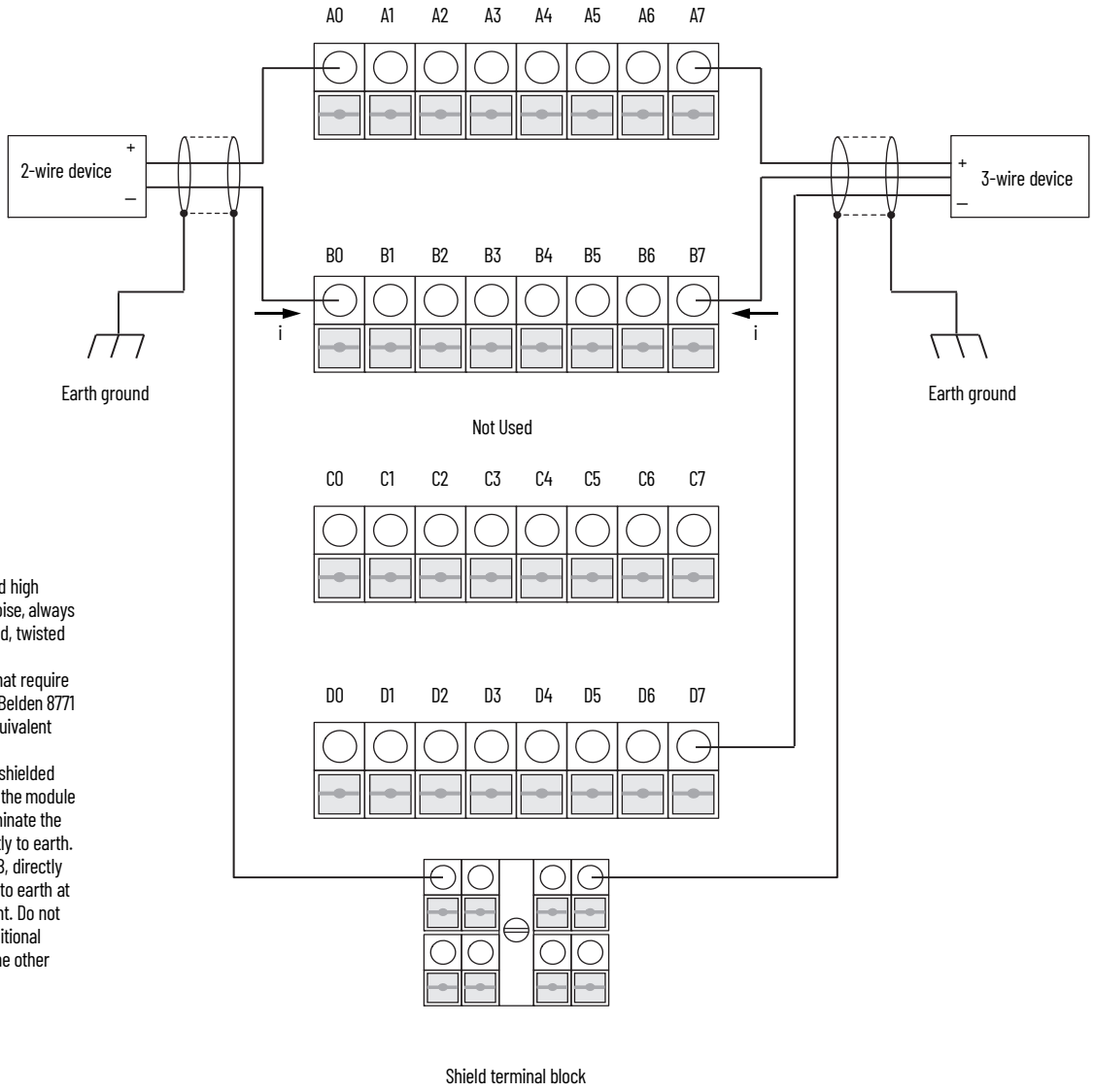

IMPORTANT:

- For proper operation and high immunity to electrical noise, always use Belden 8761 (shielded, twisted pair) or equivalent wire.
  For termination points that require three wires, always use Belden 8771 (shielded, twisted) or equivalent wire.
- We recommend that all shielded cables be terminated on the module side to the STB and terminate the device side shield directly to earth. If you do not use the STB, directly ground the cable shield to earth at a single termination point. Do not use the STB without additional ground termination at the other end.

Figure 2 - Analog Inputs 3-wire and 4-wire Current Mode with External Power Loop

In this example, an external power supply provides power to the transmitter. You can also source power for the transmitter from the FLEXHA 5000 I/O system as described in Figure 1.

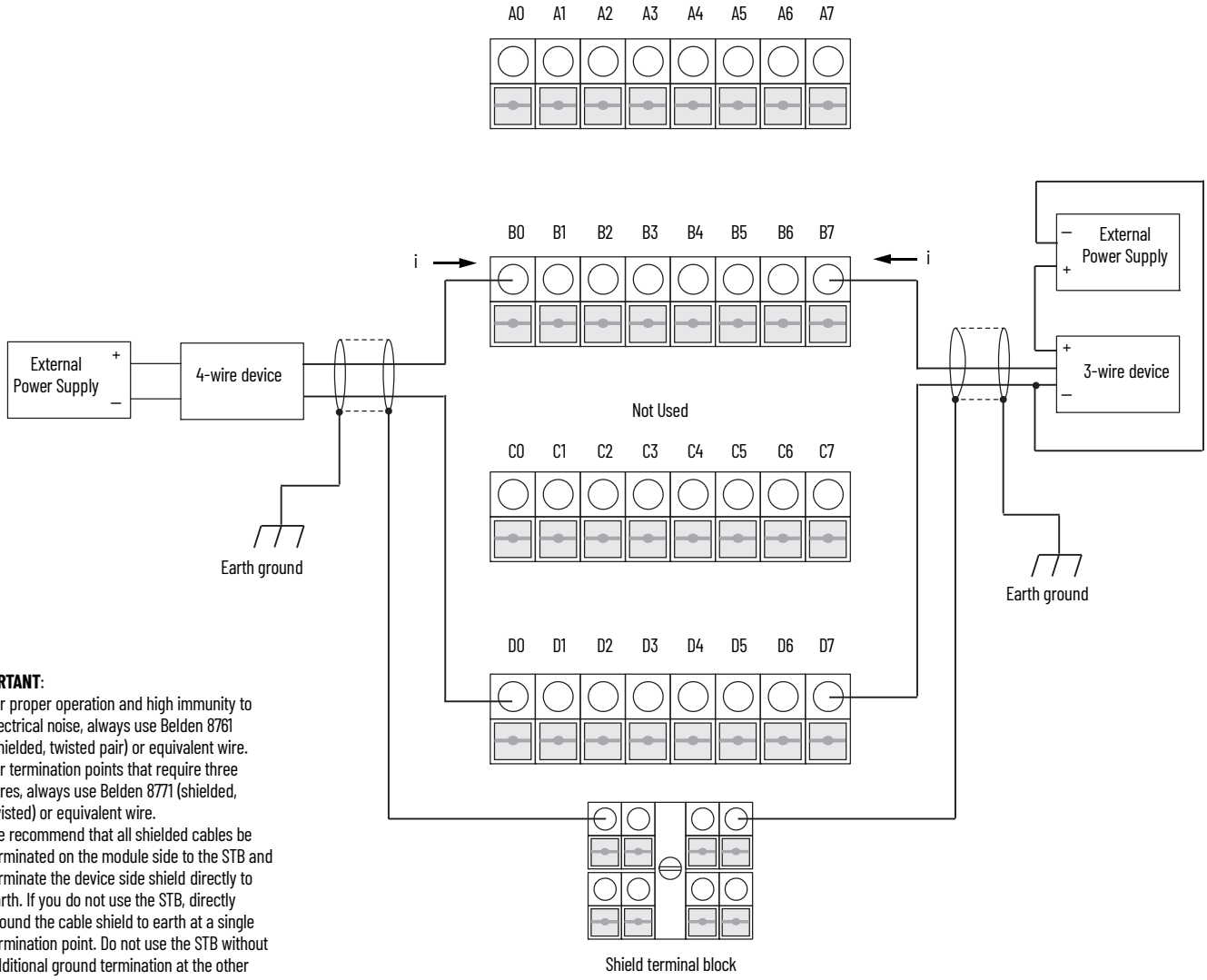

IMPORTANT:

- For proper operation and high immunity to electrical noise, always use Belden 8761 (shielded, twisted pair) or equivalent wire. For termination points that require three wires, always use Belden 8771 (shielded, twisted) or equivalent wire.
- We recommend that all shielded cables be terminated on the module side to the STB and terminate the device side shield directly to earth. If you do not use the STB, directly ground the cable shield to earth at a single termination point. Do not use the STB without additional ground termination at the other end.

Analog Output Wiring Diagrams

Figure 3 - Analog Outputs 2-wire and 4-wire Load

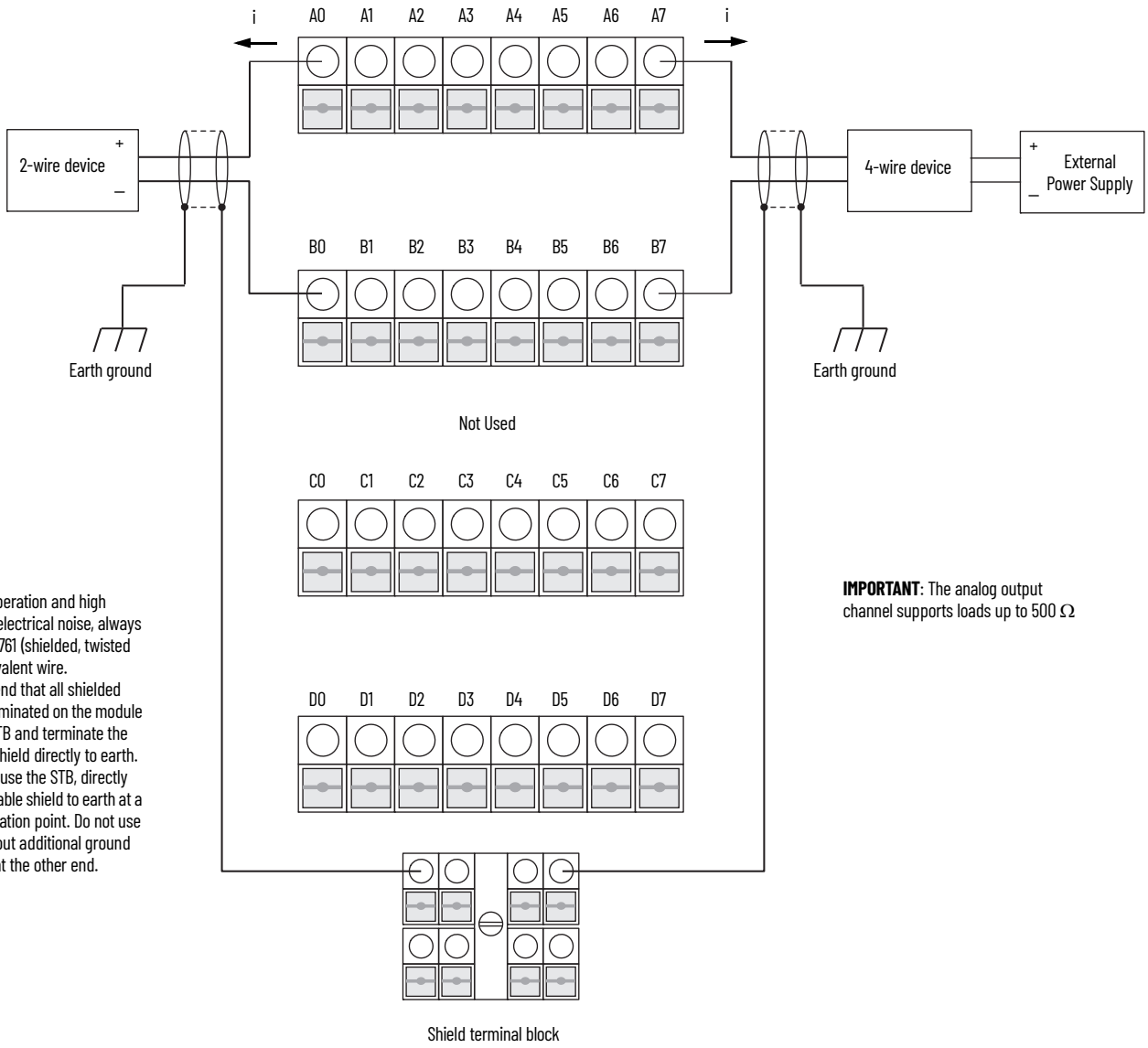

IMPORTANT:
- For proper operation and high immunity to electrical noise, always use Belden 8761 (shielded, twisted pair) or equivalent wire.
- We recommend that all shielded cables be terminated on the module side to the STB and terminate the device side shield directly to earth. If you do not use the STB, directly ground the cable shield to earth at a single termination point. Do not use the STB without additional ground termination at the other end.

IMPORTANT: The analog output channel supports loads up to 500 Ω

Digital Input Wiring Diagrams

Figure 4 - Digital Inputs 2-wire Devices

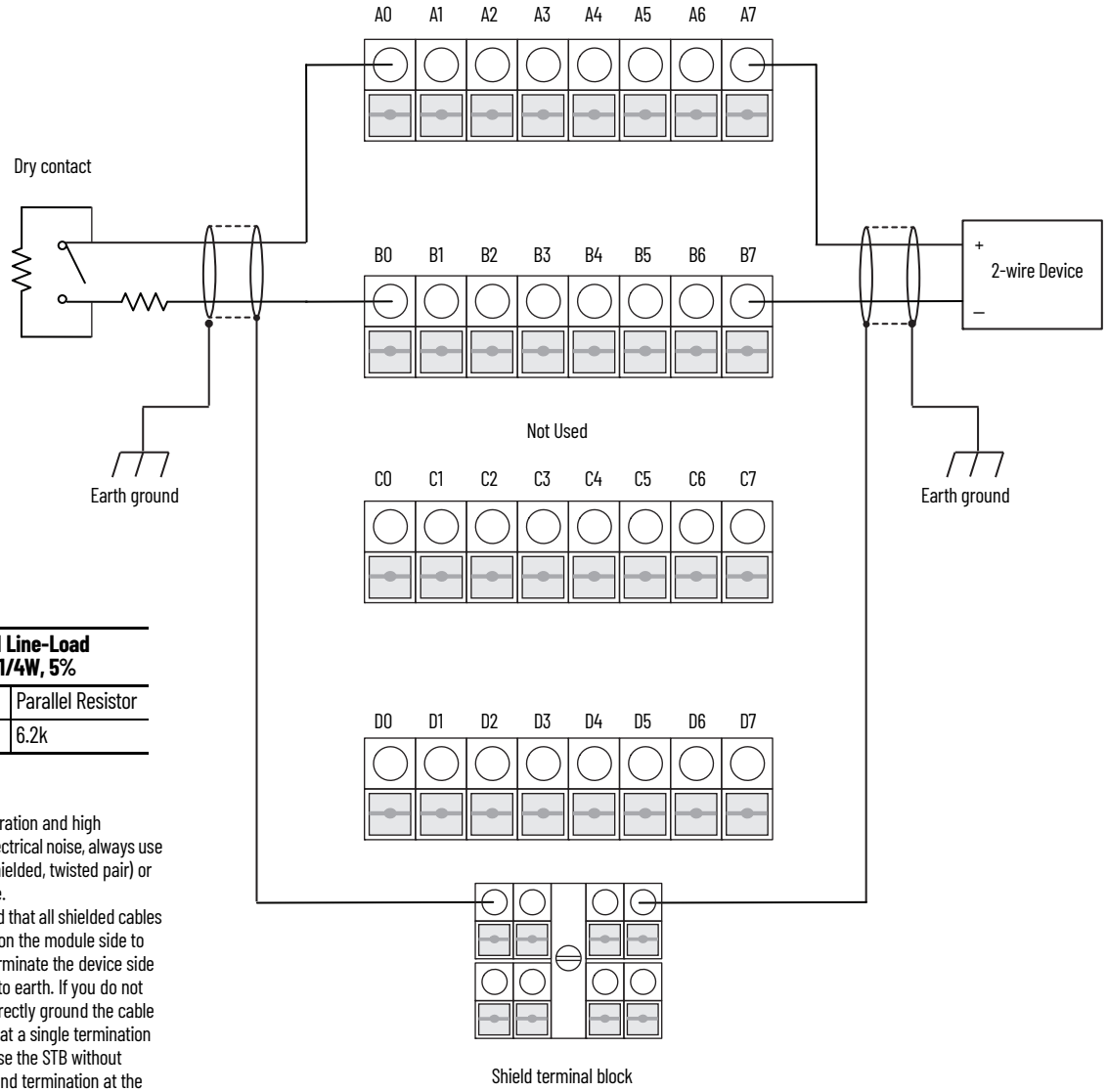

Recommended Line-Load Resistors Size 1/4W, 5%	
Series Resistor	Parallel Resistor
1.5k	6.2k

IMPORTANT:
- For proper operation and high immunity to electrical noise, always use Belden 8761 (shielded, twisted pair) or equivalent wire.
- We recommend that all shielded cables be terminated on the module side to the STB and terminate the device side shield directly to earth. If you do not use the STB, directly ground the cable shield to earth at a single termination point. Do not use the STB without additional ground termination at the other end.

Digital Output Wiring Diagrams

Figure 5 - Digital Outputs 2-wire Devices

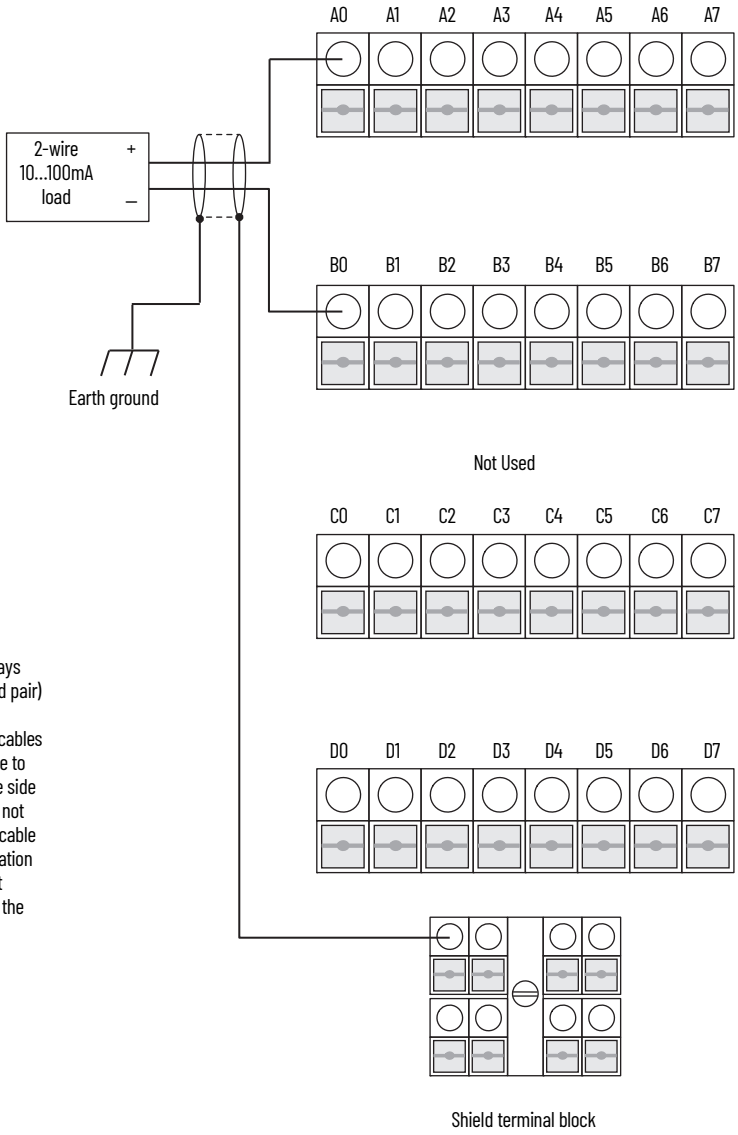

IMPORTANT:

- For proper operation and high immunity to electrical noise, always use Belden 8761 (shielded, twisted pair) or equivalent wire.
- We recommend that all shielded cables be terminated on the module side to the STB and terminate the device side shield directly to earth. If you do not use the STB, directly ground the cable shield to earth at a single termination point. Do not use the STB without additional ground termination at the other end.

Figure 6 - Digital Outputs - External Power Source Mode

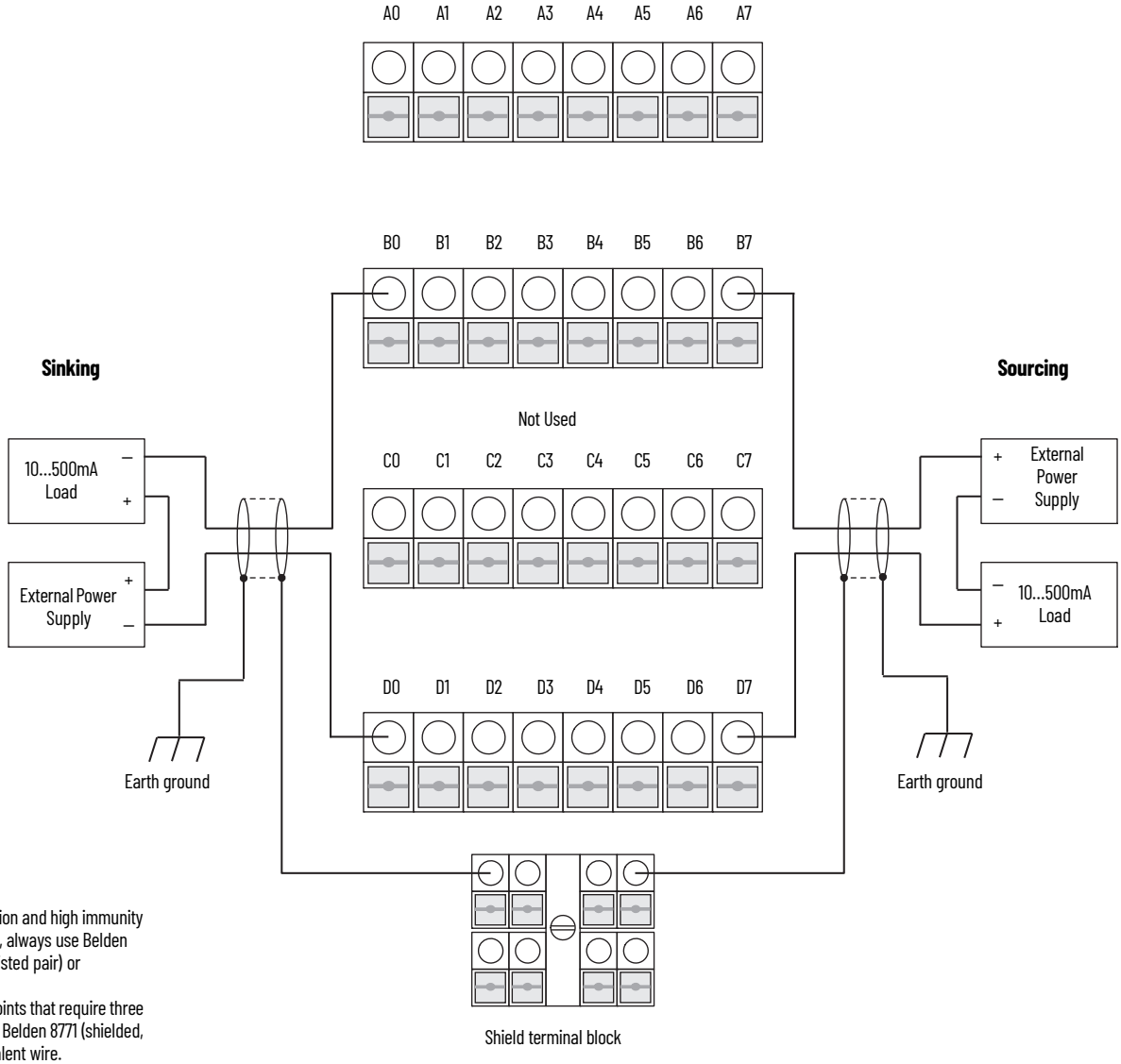

IMPORTANT:

- For proper operation and high immunity to electrical noise, always use Belden 8761 (shielded, twisted pair) or equivalent wire.
  For termination points that require three wires, always use Belden 8771 (shielded, twisted) or equivalent wire.
- We recommend that all shielded cables be terminated on the module side to the STB and terminate the device side shield directly to earth. If you do not use the STB, directly ground the cable shield to earth at a single termination point. Do not use the STB without additional ground termination at the other end.

Functional Block Diagram

The following figure shows the 5015-U8IHFTXT universal I/O module functional block diagram.

5015-U8IHFTXT Functional Block Diagram

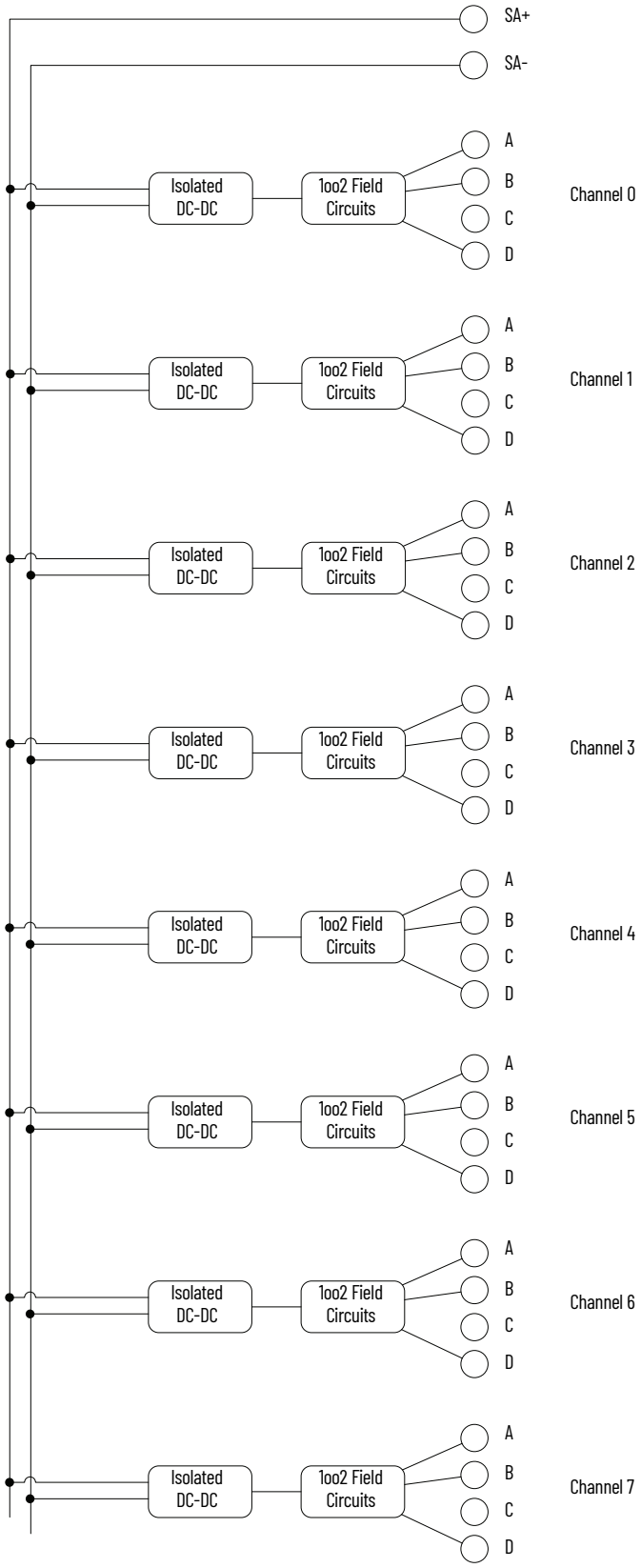

Table 1 provide specifications that apply to the Universal I/O module regardless what mode it is configured for.

Table 1 - General Specifications - 5015-U8IHFTXT

Attribute	5015-U8IHFTXT
Voltage and current ratings	
Sensor actuator power (SA)	1.5 A @ 24V DC, nom 20.8...28.8V DC, full range 32V DC, fault voltage
Analog Input (AI), HART (SINK/SOURCE) channel type	4...20 mA/50 mA max
Analog Output (AO), HART (SINK/SOURCE) channel type	4...20 mA/25 mA max
Digital Input (DI), (SINK/SOURCE) channel type	24V DC, 2.5 mA/30 mA
Digital Output (DO), (SINK/SOURCE) channel type	24V DC, 0.5 A/100 mA
Surge current on SA power	2 A max for 100 ms, repeatable every 2 seconds(1)
Overvoltage protection, max	+/- 32V DC
Overtemperature protection	Yes
Isolation voltage	250V (continuous), Basic Insulation Type Channel to Channel 250V (continuous), Basic Insulation Backplane to Field
Supported mounting orientation	Horizontal, vertical, vertical and inverted
Module keying	Mechanical
Wiring category(2)	2 - power ports 2 - signal ports (Via RTB on I/O Base)
Status indicators	One green/red MODULE status One green/red REDUNDANCY status One green/red BACKPLANE A status One green/red BACKPLANE B status One green/red S/A PWR status Eight yellow/red ANALOG IN status Eight yellow/red ANALOG OUT status Eight yellow/red DIGITAL IN status Eight yellow/red DIGITAL OUT status
Dimensions	140 x 38 x 118 mm (5.51 x 1.50 x 4.65 in.) D x W X H(3)
RTB(4)	• 5015-RTBPXT (Push-in Simplex)(5) • 5015-RTBRPXT (Push-in Duplex)(6)
Weight, approx.	245 g (0.54 lb)
Enclosure type	None (open-style)

(1) This can limit the number of channels that can see a simultaneous inrush/surge. You must keep the inrush/surge below this level to avoid possible I/O module damage.

(2) Use this Conductor Category information for planning conductor routing as described in the appropriate System Level Installation Manual. Also refer to Industrial Automation Wiring and Grounding Guidelines, publication 1770-4.1, for more installation information.

(3) Depth represents the distance from the top of the component to the bottom. Width represents the distance from side to side. Height represents the distance from the front of the component to where it touches the base.

(4) You must use shielded wire with the Universal I/O module.

(5) For more information on this RTB, see page 22.

(6) For more information on this RTB, see page 23.

Table 2 provides specifications that apply when channels on the Universal I/O module are used as analog inputs.

Table 2 - Technical Specifications - 5015-U8IHFTXT - Analog Inputs

Attribute	5015-U8IHFTXT
Channels	Eight individually isolated HART (Sinking and sourcing)
Input impedance	Simplex mode • 50 Ω, minimum non-HART • 230 Ω, minimum HART Duplex mode • 25 Ω, minimum non-HART • 230 Ω, minimum HART
Requested packet interval (RPI), min	Simplex mode - 10 ms Duplex mode - 20 ms
CIP Sync™	Yes
HART handheld compliance	Yes
Onboard data alarming	Yes
Scaling to engineering units	Yes
Data format	IEEE 754, 32-bit floating point
Step response time	Simplex mode - 35 ms without filtering (includes the RPI) Duplex mode - 65 ms without filtering (includes the RPI)
Overcurrent protection	25 mA
Input over temperature detection	Yes
Accuracy	0.15% of range @ 25° C (77° F) 0.3% of range over temperature
Filtering	One of the following (user-configured): • 10 Hz • 20 Hz • 50 Hz
Scan time per channel	Once per RPI (new data)
Real-time channel sampling	Yes 16 bit rolling time (ms)
Module conversion method	Not constrained
Time stamp of inputs	Yes, rolling time stamp per channel
Comment mode noise rejection	75 dB @ 50/60 Hz
Sourcing voltage	18...32V DC
Channel bandwith	Dependent on filter selection

Table 3 provides specifications that apply when channels on the Universal I/O module are used as analog outputs.

Table 3 - Technical Specifications - 5015-U8IHFTXT - Analog Outputs

Attribute	5015-U8IHFTXT
Channels	Eight individually isolated HART (Sinking and sourcing)
Requested packet interval (RPI), min	Simplex mode - 10 ms Duplex mode - 20 ms
CIP Sync	Yes
HART handheld compliance	Yes
Onboard data alarming	Yes
Scaling to engineering units	Yes
Data format	IEEE 754, 32-bit floating point
Resolution	16-bit DAC resolution (0.38 µA/bit) 4...20 mA
Step response time	63% of desired output within 1 ms (HART disabled)
Drive capability	500 Ω, max
Inductive load, max	1 mH
Accuracy	0.1% of range @ 25° C (77° F) 0.4% of range over temperature
Repeatability	better than accuracy
Output over temperature detection	Yes
Output control in communication fault state per point	0 mA
Output states in program mode per point	0 mA
Output states in final fault mode per point	0 mA

Table 4 provides specifications that apply when channels on the Universal I/O module are used as digital inputs.

Table 4 - Technical Specifications - 5015-U8IHFTXT - Digital Inputs

Attribute	5015-U8IHFTXT
Channels	Eight individually isolated Sourcing digital input
On-state current	Simplex - Limited to 2.5 mA @ 24V DC Duplex - Limited to 5 mA @ 24V DC
Off/On state voltage	User-defined
Requested packet interval (RPI), min	Simplex mode - 10 ms Duplex mode - 20 ms
Input over temperature detection	Yes
CIP Sync	Yes
Input delay time	RPI + user-configured filter value

Table 5 provides specifications that apply when channels on the Universal I/O module are used as digital outputs.

Table 5 - Technical Specifications - 5015-U8IHFTXT - Digital Outputs

Attribute	5015-U8IHFTXT
Channels	Eight individually isolated Sourcing and sinking Driving current: 10...100mA using internal power source 10...500 mA using external power source
Requested packet interval (RPI), min	Simplex mode - 10 ms Duplex mode - 20 ms
CIP Sync	Yes
Off-state voltage, max	5V DC
On-state voltage, nom	24V DC (sinking and sourcing)
On-state current, min	10 mA
On-state current, max	100 mA or 500 mA, depending on source
Off-state leakage current per point, max	0.5 mA per point
Output current rating, max	100 mA per channel with internal power (sourcing) 500 mA per channel with external power (sinking and sourcing)
External power supply, power rating	24V DC, nom 20.8...28.8V DC, full range
Surge current per point	120% for 10 ms, repeatable every 2 seconds. (120 mA internal power, 600 mA external power).
Output delay time, max	
Time: Off to On	Simplex - 12.2 ms + RPI Duplex - 22.2 ms + RPI
Time: On to Off	Simplex - 10.1 ms + RPI Duplex - 20.1 ms + RPI
Output control in network (connection timeout) fault state per point	Off
Output states in program mode per point	Off
Duration of fault mode per point Go to another defined state after duration has expired	Off
Scheduled outputs	No

EtherNet/IP Adapters

5015-AENFTXT

Redundant EtherNet/IP adapters are used in a FLEXHA 5000 I/O system. Each adapter facilitates communication between the FLEXHA 5000 I/O system and other devices, such as, ControlLogix® 1756-EN4TR communication modules, across an EtherNet/IP network. The EtherNet/IP adapters reside in the Adapter Base.

Table 6 - General Specifications - 5015-AENFTXT

Attribute	5015-AENFTXT
Backplane power (BP)	550 mA @ 15V DC **IMPORTANT**: This value represents the total backplane power for the FLEXHA 5000 EtherNet/IP adapter and FLEXHA 5000 Media Landing Card.
Power dissipation, max	8.25 W
Thermal dissipation, max	28.15 BTU/hr
EtherNet/IP communication rate	10 Mbps 100 Mbps 1 Gbps
USB port	One 2.0 port with Type B connector (Behind door)
Isolation voltage	250V (continuous), Basic Insulation Type, USB to Backplane
Keying	Mechanical
Wiring category(1)	2 - signal ports (USB)
Status indicators	One 4-character display One green/red MODULE status One green/red REDUNDANCY status One green/red BACKPLANE A status One green/red BACKPLANE B status One green/red NETWORK status One green/red SD CARD status (behind door)
Dimensions	127 x 50 x 118 mm (5.00 x 2.00 x 4.65) D x W x H(2)
Weight, approx.	418 g (0.92 lb)

(1) Use this Conductor Category information for planning conductor routing as described in the appropriate System Level Installation Manual. Also refer to Industrial Automation Wiring and Grounding Guidelines, publication 1770-4.1, for more installation information.

(2) Depth represents the distance from the top of the component to the bottom. Width represents the distance from side to side. Height represents the distance from the front of the component to where it touches the base.

Media Landing Cards

5015-MLTRXT

Redundant 5015-MLTRXT media landing cards (MLCs) are used in a FLEXHA 5000 I/O system--one for each EtherNet/IP adapter. An MLC connects the EtherNet/IP adapter to up to two Ethernet/IP cables via two Ethernet RJ45 connections. The MLCs reside in the Adapter Base.

Table 7 - General Specifications - 5015-MLTRXT

Attribute	5015-MLTRXT
Backplane power (BP)	550 mA @ 15V DC **IMPORTANT**: This value represents the total backplane power for the FLEXHA 5000 Media Landing Card and the FLEXHA 5000 EtherNet/IP adapter, catalog number 5015-AENFTXT.
Isolation voltage	250V (continuous), Basic Insulation Type, Ethernet ports to Backplane 250V (continuous), Basic Insulation Type, Ethernet port to Ethernet
Wiring category(1)	2 - signal ports (Ethernet)
Ethernet ports	Two RJ45 ports
EtherNet/IP communication rate	10 Mbps 100 Mbps 1 Gbps
Keying	None
Status indicators	One green/red MODULE status One green LINK 1 status One green LINK 2 status
Dimensions	83 x 37 x 77 mm (3.27 x 1.46 x 3.03 in.) D x W x H(2)
Weight, approx.	76 g (0.17 lb)

(1) Use this Conductor Category information for planning conductor routing as described in the appropriate System Level Installation Manual. Also refer to Industrial Automation Wiring and Grounding Guidelines, publication 1770-4.1, for more installation information.

(2) Depth represents the distance from the top of the component to the bottom. Width represents the distance from side to side. Height represents the distance from the front of the component to where it touches the base.

IMPORTANT The MLC is used with the EtherNet/IP adapter. The MLC is tested to the same standards as the EtherNet/IP adapter. The MLC is not tested alone.

Power Conditioner

5015-PB100FTXT

Redundant power conditioners are used in FLEXHA 5000 I/O systems. Each power conditioner converts externally sourced power to backplane power. The power conditioners reside in the Adapter Base.

You can install a 5015-RTBPXT on the power conditioner and wire 2-wire dry contact devices to the diagnostic inputs that monitor power conditions. Figure 7 shows 2-wire contacts. Consider the following:

- The maximum wire length from a device to an RTB terminal is 10 m (32.8 ft).
- Shielded cable is optional. In this example, the devices that are connected to the A and B terminals do not use shielded cable. The devices that are connected to the C and D terminals do use shielded cable.
- If shielded cable is used, you must ground it at an earth ground. This may be done by applying a crimp eyelet to the drain wire to allow connection to the mounting plate with ST4.8 screw torqued to 0.7 +/-0.11 Nm (6 +/-1 in•lb).

Figure 7 - 2-wire Devices Connected to a 5015-RTBPXT

Recommended Line-Load Resistors Size 1/4W, 5%	
Series Resistor	Parallel Resistor
1.5k	6.2k

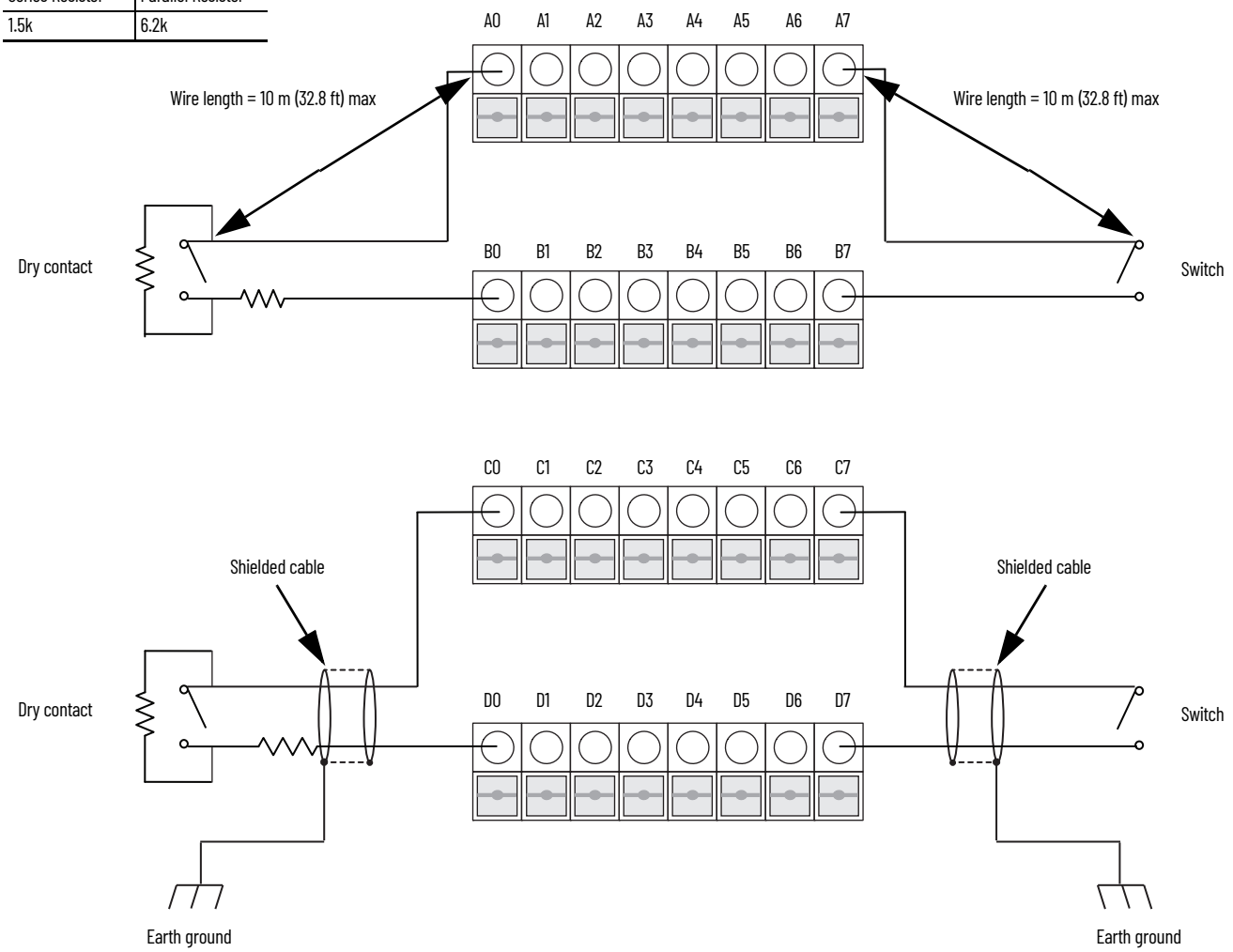

Table 8 - General Specifications - 5015-PB100FTXT

Attribute	5015-PB100FTXT
Voltage and current ratings	
Input: Module power (MP)	SELV/PELV 24V DC, nom., 20.8V...28.8V DC, 120W Max, 32V DC Fault Voltage
Output: Backplane power (BP)	6.6 A @ 15V DC, 100 W Max
Wiring category(1)	2 - power ports (via RTBs on Adapter Base)
Isolation voltage	250V (continuous), Basic Insulation Type, Module Power to Backplane 250V (continuous), Basic Insulation Type, Diagnostic I/O to Backplane
Keying	Mechanical
Status indicators	One green/red MODULE status One green/red SYSTEM POWER status One green/red DC IN status Sixteen yellow diagnostic input status
RTBs	5015-RTBPWPXT - MOD power(2) 5015-RTBPXT - Diagnostic inputs
Dimensions	140 x 38 x 118 mm (5.51 x 1.50 x 4.65 in.) D x W x H(3)
Weight, approx.	266 g (0.59 lb)

(1) Use this Conductor Category information for planning conductor routing as described in the appropriate System Level Installation Manual. Also refer to Industrial Automation Wiring and Grounding Guidelines, publication 1770-4.1, for more installation information.

(2) Two RTBs are needed--one to connect MOD power A and one to connect MOD power B.

(3) Depth represents the distance from the top of the component to the bottom. Width represents the distance from side to side. Height represents the distance from the front of the component to where it touches the base.

Accessories

This section describes the accessories that are used in a FLEXHA 5000 I/O system.

IMPORTANT FLEXHA 5000 I/O accessories are tested to the Environmental Specifications and Certification standards that are listed in each section with their parent components. Accessories are not tested individually.

The parent for each accessory is the component (or components) with which it is used. For example, the Adapter Base is tested with the power conditioners and EtherNet/IP adapters.

Bases

Adapter Base - 5015-A2AXT

The 5015-A2AXT Adapter base is used to install the following:

- Power conditioners
- Power and diagnostic RTBs
- EtherNet/IP adapters
- MLCs
- BIMs

IMPORTANT You must install an Adapter Base in the horizontal orientation.

Table 9 - General Specifications - 5015-A2AXT

Attribute	5015-A2AXT
Wiring category(1)	2 - signal ports (Diag. In) 2 - power ports (power) (Via RTBs on Adapter Base)
Isolation voltage	250V (continuous), Basic Insulation Type
Dimensions	220 x 240 x 56 mm (8.66 x 9.45 x 2.20 in.) D x W x H(2)
Weight, approx.	767 g (1.69 lb)

(1) Use this Conductor Category information for planning conductor routing as described in the appropriate System Level Installation Manual. Also refer to Industrial Automation Wiring and Grounding Guidelines, publication 1770-4.1, for more installation information.

(2) Depth represents the distance from the top of the component to the bottom. Width represents the distance from side to side. Height represents the distance from the front of the component to where it touches the base.

I/O Base - 5015-A4IOXT

The 5015-A4IOXT I/O base is used to install the following (not all are required):

- I/O modules
- BIMs
- SA power RTBs
- SA power jumpers
- Duplex RTBs
- Simplex RTBs
- Slot fillers
- End cap

Table 10 - General Specifications - 5015-A4IOXT

Attribute	5015-A4IOXT
Wiring category[1]	2 - signal ports (I/O) 2 - power ports (Via RTBs on I/O Base)
Isolation voltage	250V (continuous), Basic Insulation Type
Dimensions	220 x 198 x 56 mm (8.66 x 7.80 x 2.20 in.) D x W x H[2]
Weight, approx.	650 g (1.43 lb)

(1) Use this Conductor Category information for planning conductor routing as described in the appropriate System Level Installation Manual. Also refer to Industrial Automation Wiring and Grounding Guidelines, publication 1770-4.1, for more installation information.

(2) Depth represents the distance from the top of the component to the bottom. Width represents the distance from side to side. Height represents the distance from the front of the component to where it touches the base.

Backplane Interface Module

5015-BIMXT

The 5015-BIMXT backplane interface modules (BIMs) facilitate, and participate in, backplane communication and slot addressing. There are two BIMs in every base.

Table 11 - General Specifications - 5015-BIMXT

Attribute	5015-BIMXT
Backplane power (BP)	134 mA @ 15V DC
Power dissipation, max	2 W
Thermal dissipation, max	6.82 BTU/hr
Keying	Mechanical
Status indicators	One green/red module status One green/red link status for the module to the left of the BIM One green/red link status for the module to the right of the BIM
Dimensions	14 x 45 x 84 mm (0.55 x 1.77 x 3.31 in.) D x W x H
Weight, approx.	41 g (0.09 lb)

Removable Terminal Blocks

You can use the following RTBs in a FLEXHA 5000 I/O system.

- Removable Terminal Block for MOD Power/SA Power, Push-in (5015-RTBPWPXT)
- Removable Terminal Block, Push-in, Simplex or Diagnostic Input (5015-RTBPXT)
- Removable Terminal Block, Push-in, Duplex (5015-RTBRPXT)
- Shield RTB, Push-in (5015-STBPXT)
- Removable Terminal Block, Jumper for SA Power (5015-RTBSAJXT)

Removable Terminal Block for MOD power/SA power, Push-in - 5015-RTBPWPXT

You use this RTB for the following purposes:

- Connect MOD power to the Adapter Base
- Connect SA power to an I/O Base

Table 12 - General Specifications - 5015-RTBPWPXT

Attribute	5015-RTBPWPXT
RTB keying	None
Voltage rating	24V DC, nom 20.8...28.8V DC
Current rating	20 A
Wiring category(1)	2 - power ports (Adapter Base or I/O Base)
Wire size(2), (3)	• 4 mm^2 (12 AWG) solid copper wire, max • 4 mm^2 (12 AWG) stranded copper wire, without ferrule, max(4) • 2.5 mm^2 (14 AWG) stranded copper wire, with ferrule, max(5), (6), (7), (8) • 2.5 mm^2 (14 AWG) stranded copper wire, without ferrule, max(8)
Insulation-stripping length	8...10 mm (0.31...0.39 in.)
Torque (to secure to base)	0.7 Nm (6 in•lb)
Dimensions	63 x 6.6 x 44 mm (2.48 x 0.26 x 1.73 in.) D x W x H(9)
Weight, approx.	98 g (0.22 lb)
Isolation voltage	250V (continuous), Basic Insulation Type between terminals

(1) Use this Conductor Category information for planning conductor routing as described in the appropriate System Level Installation Manual. Also refer to Industrial Automation Wiring and Grounding Guidelines, publication 1770-4.1, for more installation information.

(2) Maximum insulation for all wire sizes is 1.2 mm (3/64 in.).

(3) Use wire temperature ratings that are appropriate for your application.

(4) Requires that you push in the release actuator to insert the wire.

(5) You must use a 4 mm^2 ferrule.

(6) Ferrule according to DIN 46 228/1.

(7) You can use ferrules with or without plastic sleeves.

(8) Ferrule stripping length, max is 8 mm...10 mm (0.31...0.4 in.)

(9) Depth represents the distance from the top of the component to the bottom. Width represents the distance from side to side. Height represents the distance from the front of the component to where it touches the base.

Removable Terminal Block, Push-in, Simplex or Diagnostic Input - 5015-RTBPXT

You can use this RTB for the following purposes:

- Connect field devices to Simplex I/O modules
- Connect to the Adapter base to monitor system power conditions, for example, to connect to power supply and field power redundancy device (FPRD) contacts

Table 13 - General Specifications - 5015-RTBPXT

Attribute	5015-RTBPXT
Voltage rating	24V DC, nom 28.8V DC, max 32V DC, fault voltage
Current rating	2 A/terminal
RTB keying	None
Wiring category(1)	2 - signal ports (Adapter Base or I/O Base)
Wire size(2), (3)	• 0.34...4 mm^2 (22...12 AWG) solid copper wire, max • 0.14...2.5 mm^2 (26...14 AWG) stranded copper wire, with ferrule, max(4), (5), (6) • 0.34...2.5 mm^2 (22...14 AWG) stranded copper wire, without ferrule, max(7)
Insulation-stripping length, max	8...10 mm (0.31...0.39 in.)
Torque (to secure to base)	0.7 Nm (6 in•lb)
Dimensions	67 x 44 x 46 mm (2.64 x 1.73 x 1.81 in.) D x W x H(8)
Weight, approx.	98 g (0.22 lb)
Isolation voltage	250V (continuous), Basic Insulation Type between terminals

(1) Use this Conductor Category information for planning conductor routing as described in the appropriate System Level Installation Manual. Also refer to Industrial Automation Wiring and Grounding Guidelines, publication 1770-4.1, for more installation information.

(2) You must use shielded wire the Universal I/O module, and the maximum insulation for all wire sizes is 1.2 mm (3/64 in.).

(3) Use wire temperature ratings that are appropriate for your application.

(4) Ferrule according to DIN 46 228/1.

(5) You can use ferrules with or without plastic sleeves.

(6) Ferrule stripping length, max is 8 mm...10 mm (0.31...0.4 in.)

(7) Requires that you push in the release actuator to insert the wire.

(8) Depth represents the distance from the top of the component to the bottom. Width represents the distance from side to side. Height represents the distance from the front of the component to where it touches the base.

Removable Terminal Block, Push-in, Duplex - 5015-RTBRPXT

You use this RTB to connect field devices to duplex I/O module pairs.

Table 14 - General Specifications - 5015-RTBRPXT

Attribute	5015-RTBRPXT
Voltage category	24V DC, nom 28.8V DC, max 32V DC, fault voltage
Current rating	2 A/terminal
RTB keying	None
Wiring category(1)	2 - signal ports (I/O) (I/O Base)
Wire size(2), (3)	• 0.34...4 mm^2 (22...12 AWG) solid copper wire, max • 0.14...2.5 mm^2 (26...14 AWG) stranded copper wire, with ferrule, max(4), (5), (6) • 0.34...2.5 mm^2 (22...14 AWG) stranded copper wire, without ferrule, max(7)
Insulation-stripping length, max	8...10 mm (0.31...0.39 in.)
Torque (to secure to base)	0.7 Nm (6 in•lb)
Dimensions	67 x 89 x 46 mm (2.64 x 3.50 x 1.81 in.) D x W x H(8)
Weight, approx.	130 g (0.29 lb)
Isolation voltage	250V (continuous), Basic Insulation Type between terminals

(1) Use this Conductor Category information for planning conductor routing as described in the appropriate System Level Installation Manual. Also refer to Industrial Automation Wiring and Grounding Guidelines, publication 1770-4.1, for more installation information.

(2) You must use shielded wire the Universal I/O module, and the maximum insulation for all wire sizes is 1.2 mm (3/64 in.).

(3) Use wire temperature ratings that are appropriate for your application.

(4) Ferrule according to DIN 46 228/1.

(5) You can use ferrules with or without plastic sleeves.

(6) Ferrule stripping length, max is 8 mm...10 mm (0.31...0.4 in.)

(7) Requires that you push in the release actuator to insert the wire.

(8) Depth represents the distance from the top of the component to the bottom. Width represents the distance from side to side. Height represents the distance from the front of the component to where it touches the base.

Removable Terminal Block Jumper for SA power, Push-in - 5015-RTBSAJXT

You use this RTB to connect SA Power between I/O Bases when SA Power is not provided independently on I/O Bases via separate SA Power RTBs.

Table 15 - General Specifications - 5015-RTBSAJXT

Attribute	5015-RTBSAJXT
Voltage rating	24V DC, nom 28.8V DC, max
Current rating	20 A
Wiring category(1)	2 - power ports (I/O Base)
RTB keying	None
Dimensions	63 x 19 x 43 mm (2.48 x 0.75 x 1.69 in) D x W x H(2)
Weight, approx.	15 g (0.03 lb)

(1) Use this Conductor Category information for planning conductor routing as described in the appropriate System Level Installation Manual. Also refer to Industrial Automation Wiring and Grounding Guidelines, publication 1770-4.1, for more installation information.

(2) Depth represents the distance from the top of the component to the bottom. Width represents the distance from side to side. Height represents the distance from the front of the component to where it touches the base.

Shield RTB, Push-in - 5015-STBPXT

You use this RTB to terminate I/O cable shields.

Table 16 - General Specifications - 5015-STBPXT

Attribute	5015-STBPXT
Current rating	2 A/terminal
Voltage rating	30V DC, max
RTB keying	None
Wiring category(1), (2)	2 - signal ports (I/O) (I/O Base)
Wire size	• 0.34...4 mm^2 (22...12 AWG) solid copper wire, max • 0.14...2.5 mm^2 (26...14 AWG) stranded copper wire, with ferrule, max(3), (4), (5) • 0.34...2.5 mm^2 (22...14 AWG) stranded copper wire, without ferrule, max(6)
Insulation-stripping length	8...10 mm (0.31...0.39 in.)
Torque (to secure to base)	2 +/-0.11 Nm (18 +/-1 in•lb)
Dimensions	30 x 35 x 45 mm (1.18 x 1.38 x 1.77 in.) D x W x H(7)
Weight, approx.	45 g (0.10 lb)

(1) Use this Conductor Category information for planning conductor routing as described in the appropriate System Level Installation Manual. Also refer to Industrial Automation Wiring and Grounding Guidelines, publication 1770-4.1, for more installation information.

(2) Use wire temperature ratings that are appropriate for your application.

(3) Ferrule according to DIN 46 228/1.

(4) You can use ferrules with or without plastic sleeves.

(5) Ferrule stripping length, max is 8 mm...10 mm (0.31...0.4 in.)

(6) Requires that you push in the release actuator to insert the wire.

(7) Depth represents the distance from the top of the component to the bottom. Width represents the distance from side to side. Height represents the distance from the front of the component to where it touches the base.

Bank Expansion/Backplane Extension Components

You can use the following bank expansion/backplane extension components in a FLEXHA 5000 I/O system.

- Bank Expansion Base
- Backplane Communication extension cables
- Backplane Power extension cables

These components are used in pairs. The specifications are listed for one component of each type.

Bank Expansion Bases - 5015-BEBLXT, 5015-BEBRXT

The 5015-BEBLXT, 5015-BEBRXT Bank Expansion Bases are used to extend backplane communication and power from one base to another via backplane communication extension cables and backplane power extension cables, respectively. The data A and data B ports on the modules are keyed so that only specific ends of the backplane communication extension cables fit into the ports.

Table 17 - General Specifications - 5015-BEBLXT, 5015-BEBRXT

Attribute	5015-BEBLXT, 5015-BEBRXT
Backplane power	6 A @ 15V DC
Cable rating	5015-BECCOMXT cable - UL AWM style 20276 80C 30V VW1 5015-BECPWRXT - UL AWM style 2103 105C 300V VW-1
Wiring category(1)	3 - signal ports (Data) 3 - power ports (Power)
Dimensions	220 x 57 x 32 mm (8.66 x 2.24 x 1.26 in.) D x W x H(2)
Weight, approx.	214 g (0.47 lb)

(1) Use this Conductor Category information for planning conductor routing as described in the appropriate System Level Installation Manual. Also refer to Industrial Automation Wiring and Grounding Guidelines, publication 1770-4.1, for more installation information.

(2) Depth represents the distance from the top of the component to the bottom. Width represents the distance from side to side. Height represents the distance from the front of the component to where it touches the base.

Backplane Communication Extension Cable - 5015-BECCOMXT

The 5015-BECCOMXT backplane communication extension cables are connected to bank expansion bases and are used to extend backplane communication from one base to another.

General Specifications - 5015-BECCOMXT

Attribute	5015-BECCOMXT
Voltage rating	30V DC, min
Bend radius	42 mm (1.65 in.), min
Length	2 m (6.5 ft.)
Weight, approx.	120 g (0.26 lb)

Backplane Power Extension Cable - 5015-BECPWRXT

The 5015-BECPWRXT backplane power extension cables are connected to backplane extension modules and are used to extend backplane power from one base to another.

Table 18 - General Specifications - 5015-BECPWRXT

Attribute	5015-BECPWRXT
Current rating	6 A at steady state
Backplane surge current, max	7.5 A for 100 ms repeatable every 1 s
Voltage rating	30V DC, min
Voltage drop	<0.6V DC with 6 A load
Bend radius	35 mm (1.38 in.), min
Length	2 m (6.5 ft.)
Weight, approx.	234 g (0.52 lb)

Slot Fillers

The FLEXHA 5000 I/O system uses the following slot fillers to protect unused connectors from unintended electrical contact, mechanical damage, corrosive elements in the environment:

- I/O Slot Filler
- SA Power Filler
- Removable Terminal Block (RTB) Filler

I/O Slot Filler - 5015-N2IOXT

The 5015-N2IO I/O slot filler is used instead of an I/O module.

Table 19 - General Specifications - 5015-N2IOXT

Attribute	5015-N2IOXT
Dimensions	140 x 38 x 118 mm (5.51 x 1.50 x 4.65 in.) D x W x H(1)
Weight, approx.	108 g (0.24 lb)

(1) Depth represents the distance from the top of the component to the bottom. Width represents the distance from side to side. Height represents the distance from the front of the component to where it touches the base.

SA Power Filler - 5015-N2SAXT

The 5015-N2SAXT SA Power filler is installed on the right side of an I/O Base when the system does not use the SA Power RTB or SA power jumper on the right side.

Table 20 - General Specifications - 5015-N2SAXT

Attribute	5015-N2SAXT
Dimensions	61 x 7 x 29 mm (2.40 x 0.28 x 1.14 in.) D x W x H(1)
Weight, approx.	4 g (0.01 lb)

(1) Depth represents the distance from the top of the component to the bottom. Width represents the distance from side to side. Height represents the distance from the front of the component to where it touches the base.

Removable Terminal Block Filler - 5015-N2RTBXT

One 5015-N2RTBXT RTB filler is used instead of a Simplex RTB when a module is not used. Two RTB fillers are used instead of a Duplex RTB when a Duplex Pair is not used.

Table 21 - General Specifications - 5015-N2RTBXT

Attribute	5015-N2RTBXT
Dimensions	67 x 44 x 46 mm (2.64 x 1.73 x 1.81 in.) D x W x H(1)
Weight, approx.	30 g (0.07 lb)

(1) Depth represents the distance from the top of the component to the bottom. Width represents the distance from side to side. Height represents the distance from the front of the component to where it touches the base.

Backplane Grounding Lug

5015-BPGNDXT

The 5015-BPGNDXT backplane grounding lug facilitates the connection of the mounting plate to installation ground.

Table 22 - General Specifications - 5015-BPGNDXT

Attribute	5015-BPGNDXT
Current rating	30 A
Ground wire size	3.26...4.11 mm^2 (8...6 AWG)
Torque (to secure to chase)	2 +/-0.11 Nm (18 +/-1 in•lb)
Dimensions	31 x 15 x 24 mm (1.22 x 0.59 x 0.94 in.) D x W x H(1)
Weight, approx.	41 g (0.09 lb)

(1) Depth represents the distance from the top of the component to the bottom. Width represents the distance from side to side. Height represents the distance from the front of the component to where it touches the mounting plate.

Mounting Plates

5015-MP300XT, 5015-MP700XT, 5015-MP900XT, 5015-MP1250XT

The 5015-MP300XT, 5015-MP700XT, 5015-MP900XT, 5015-MP1250XT mounting plates are connected to the cabinet and support the FLEXHA 5000 I/O system.

Table 23 - General Specifications - 5015-MP300XT, 5015-MP700XT, 5015-MP900XT, 5015-MP1250XT

Attribute	5015-MP300XT, 5015-MP700XT, 5015-MP900XT, 5015-MP1250XT
Current rating	30 A
Torque (to connect to cabinet)	Based on screw type used: • M4 screws: 1.3 Nm (11.5 in•lb) • #10...24 screws: 2.2 Nm (19 in•lb) • #10...32 screws: 3.3 Nm (29 in•lb)
Dimensions	
5015-MP300XT	192 x 300 x 15 mm (7.56 x 11.81 x 0.59 in.) D x W x H(1)
5015-MP700XT	192 x 700 x 15 mm (7.56 x 27.56 x 0.59 in.) D x W x H(1)
5015-MP900XT	192 x 900 x 15 mm (7.56 x 35.43 x 0.59 in.) D x W x H(1)
5015-MP1250XT	192 x 1250 x 15 mm (7.56 x 47.24 x 0.59 in.) D x W x H(1)
Weight, approx.	
5015-MP300XT	742 g (1.63 lb)
5015-MP700XT	1729 g (3.81 lb)
5015-MP900XT	2228 g (4.91 lb)
5015-MP1250XT	3094 g (6.82 lb)

(1) Depth represents the distance from the top of the mounting plate to the bottom. Width represents the distance from side to side. Height represents the distance from the front of the base to where it touches the cabinet.

End Cap

5015-ECRXT

The 5015-ECRXT end cap covers the last base-to-base connector of an I/O bank to protect the connector.

Table 24 - General Specifications - 5015-ECRXT

Attribute	5015-ECRXT
Dimensions	50 x 10 x 19 mm (1.97 x 0.39 x 0.75 in.) D x W x H
Weight, approx.	3 g (0.01 lb)

Minimum Spacing Requirements

This section provides minimum distances of the enclosure and between the FLEXHA 5000 I/O system.

IMPORTANT Before you install the correctly-sized cabinet and the FLEXHA 5000 I/O system, you must calculate the correct enclosure size based on the power dissipation of the system and the ambient temperature.

The following requirements are used to maintain spacing in the FLEXHA 5000 I/O system.

- Minimum enclosure depth
- Minimum distance from I/O system banks to enclosure walls, wireways, and adjacent equipment.
- Minimum distance between I/O system banks in a multi-bank system.

FLEXHA 5000 I/O System Spacing - Recommended Enclosure Depth

The enclosure must be a minimum of 203 mm (8 in.) deep.

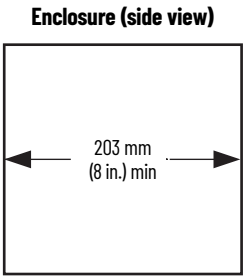

FLEXHA 5000 Spacing - Single Bank

The sides of a system bank must be at least 100 mm (4 in.) from enclosure walls, wireways, and adjacent equipment. The distance from the system bank to the front of the enclosure must be at least 50 mm (2 in.).

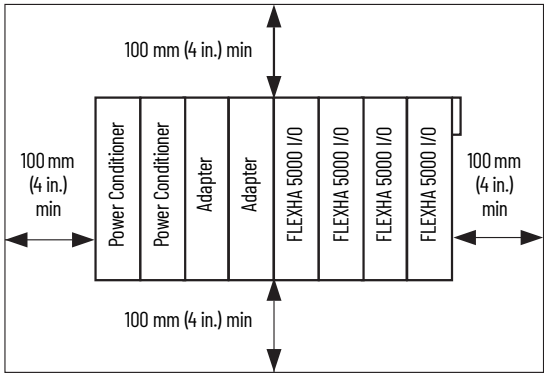

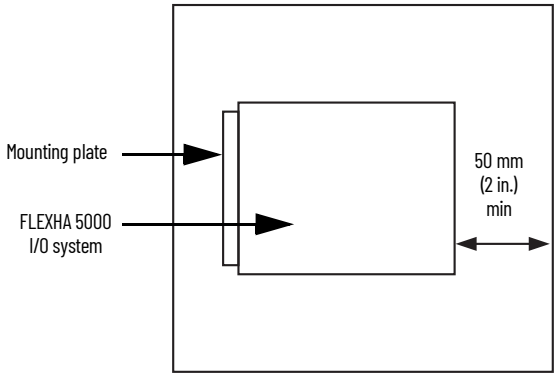

FLEXHA 5000 Spacing - Multiple Banks

When you install multiple banks, in addition to maintaining a minimum distance of 100 mm (4 in.) from enclosure walls, wireways, and adjacent equipment, you must also maintain a minimum of 100 mm (4 in.) between banks, as shown in the examples below. The distance from the system bank to the front of the enclosure must be at least 50 mm (2 in.).

Enclosure (front view)

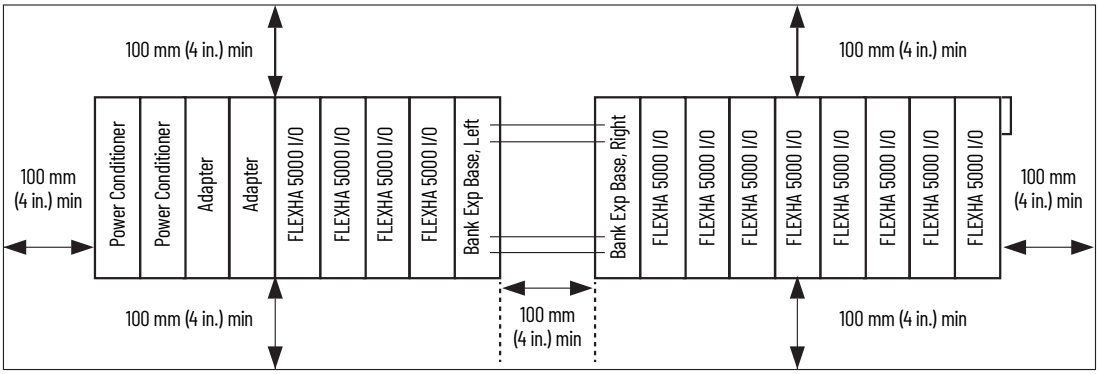

Enclosure (front view)

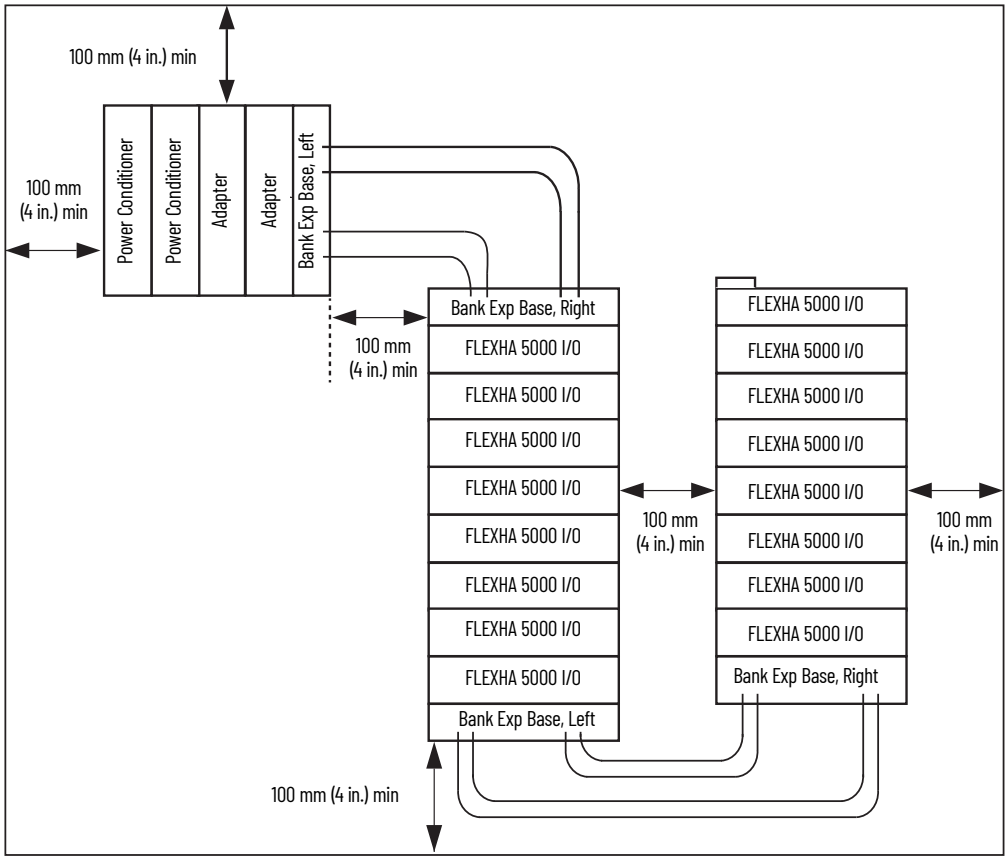

Additional Resources

These documents contain additional information about FLEXHA 5000 I/O systems and documentation.

Resource	Description
FLEXHA 5000 I/O System Installation Instructions, publication 5015-IN001	Describes how to install a FLEXHA 5000 I/O system.
FLEXHA 5000 I/O System User Manual, publication 5015-UM001	Provides information on how configure, operate and maintain FLEXHA 5000 I/O systems.
Industrial Automation Wiring and Grounding Guidelines, publication 1770-4.1	Provides general guidelines for installing a Rockwell Automation industrial system.
Product Certifications website, http://rok.auto/certifications	Provides declarations of conformity, certificates, and other certification details.

Rockwell Automation Support

Use these resources to access support information.

Technical Support Center	Find help with how-to videos, FAQs, chat, user forums, and product notification updates.	rok.auto/support
Knowledgebase	Access Knowledgebase articles.	rok.auto/knowledgebase
Local Technical Support Phone Numbers	Locate the telephone number for your country.	rok.auto/phonesupport
Literature Library	Find installation instructions, manuals, brochures, and technical data publications.	rok.auto/literature
Product Compatibility and Download Center (PCDC)	Download firmware, associated files (such as AOP, EDS, and DTM), and access product release notes.	rok.auto/pcdc

Documentation Feedback

Your comments help us serve your documentation needs better. If you have any suggestions on how to improve our content, complete the form at rok.auto/docfeedback.

Allen-Bradley, ControlLogix, expanding human possibility, FLEXHA 5000, and Rockwell Automation are trademarks of Rockwell Automation, Inc.
CIP Sync and EtherNet/IP are trademarks of ODVA, Inc.
Trademarks not belonging to Rockwell Automation are property of their respective companies.

Rockwell Automation maintains current product environmental compliance information on its website at rok.auto/pec.

Rockwell Otomasyon Ticaret A.Ş. Kar Plaza İş Merkezi E Blok Kat:6 34752, İçerenköy, İstanbul, Tel: +90 (216) 5698400 EEE Yönetmeliğine Uygundur

Connect with us.

rockwellautomation.com — expanding **human possibility**™

AMERICAS: Rockwell Automation, 1201 South Second Street, Milwaukee, WI 53204-2496 USA, Tel: (1) 414.382.2000, Fax: (1) 414.382.4444
EUROPE/MIDDLE EAST/AFRICA: Rockwell Automation NV, Pegasus Park, De Kleetlaan 12a, 1831 Diegem, Belgium, Tel: (32) 2 663 0600, Fax: (32) 2 663 0640
ASIA PACIFIC: Rockwell Automation, Level 14, Core F, Cyberport 3, 100 Cyberport Road, Hong Kong, Tel: (852) 2887 4788, Fax: (852) 2508 1846

Publication 5015-TD001A-EN-P - November 2022

Copyright © 2022 Rockwell Automation, Inc. All rights reserved. Printed in the U.S.A.