User Manual

Allen-Bradley

ArmorStart® LT Distributed Motor Controller

Catalog Numbers 290D, 291D, 294D

DeviceNet

Allen-Bradley • Rockwell Software

Rockwell Automation

Important User Information

Because of the variety of uses for the products described in this publication, those responsible for the application and use of this control equipment must satisfy themselves that all necessary steps have been taken to assure that each application and use meets all performance and safety requirements, including any applicable laws, regulations, codes and standards.

The illustrations, charts, sample programs and layout examples shown in this guide are intended solely for purposes of example. Since there are many variables and requirements associated with any particular installation, Rockwell Automation does not assume responsibility or liability (to include intellectual property liability) for actual use based upon the examples shown in this publication.

Solid-state equipment has operational characteristics differing from those of electromechanical equipment. *Safety Guidelines for the Application, Installation and Maintenance of Solid State Controls* (Publication SGI-1.1 available from your local Rockwell Automation sales office or online at http://www.rockwellautomation.com/literature/) describes some important differences between solid-state equipment and hard-wired electromechanical devices. Because of this difference, and also because of the wide variety of uses for solid-state equipment, all persons responsible for applying this equipment must satisfy themselves that each intended application of this equipment is acceptable.

In no event will Rockwell Automation, Inc. be responsible or liable for indirect or consequential damages resulting from the use or application of this equipment.

The examples and diagrams in this manual are included solely for illustrative purposes. Because of the many variables and requirements associated with any particular installation, Rockwell Automation, Inc. cannot assume responsibility or liability for actual use based on the examples and diagrams.

No patent liability is assumed by Rockwell Automation, Inc. with respect to use of information, circuits, equipment, or software described in this manual.

Reproduction of the contents of this manual, in whole or in part, without written permission of Rockwell Automation, Inc., is prohibited.

Throughout this manual, when necessary, we use notes to make you aware of safety considerations.

	WARNING: Identifies information about practices or circumstances that can cause an explosion in a hazardous environment, which may lead to personal injury or death, property damage, or economic loss.
	ATTENTION: Identifies information about practices or circumstances that can lead to personal injury or death, property damage, or economic loss. Attentions help you identify a hazard, avoid a hazard, and recognize the consequence.
	SHOCK HAZARD: Labels may be on or inside the equipment, for example, a drive or motor, to alert people that dangerous voltage may be present.
	BURN HAZARD: Labels may be on or inside the equipment, for example, a drive or motor, to alert people that surfaces may reach dangerous temperatures.
IMPORTANT	Identifies information that is critical for successful application and understanding of the product.

General Precautions

In addition to the precautions listed throughout this manual, the following statements, which are general to the system, must be read and understood.

ATTENTION: This manual is intended for qualified service personnel responsible for setting up and servicing these devices. The user must have previous experience with and a basic understanding of electrical terminology, configuration procedures, required equipment, and safety precautions.

WARNING: The National Electrical Code (NEC), NFPA79, and any other governing regional or local code will overrule the information in this manual. Rockwell Automation cannot assume responsibility for the compliance or proper installation of the ArmorStart LT or associated equipment. A hazard of personal injury and/or equipment damage exists if codes are ignored during installation.

ATTENTION: The controller contains ESD (electrostatic discharge) sensitive parts and assemblies. Static control precautions are required when installing, testing, servicing, or repairing the assembly. Component damage may result if ESD control procedures are not followed. If you are not familiar with static control procedures, refer to Publication 8000-4.5.2, Guarding against Electrostatic Discharge, or any other applicable ESD protection handbooks.

ATTENTION: Only personnel familiar with the controller and associated machinery should plan or implement the installation, startup, and subsequent maintenance of the system. Failure to do this may result in personal injury and/or equipment damage.

Precautions for Bulletin 294D Applications

ATTENTION: Only qualified personnel familiar with adjustable frequency AC drives and associated machinery should plan or implement the installation, startup, and subsequent maintenance of the system. Failure to do this may result in personal injury and/or equipment damage.

Software Requirements

The table lists the versions of software that are required.

Software	Version
RSLinx Classic	2.56 or later
RSLogix 5000	17.01 or later Download the most current version of the Add-On Profile from http://www.rockwellautomation.com/support/downloads.html.
RSNetworx	11 or later

Additional Resources

These documents and websites contain additional information concerning related Rockwell Automation products.

You can view or download publications at http:/www.rockwellautomation.com/literature/. To order paper copies of technical documentation, contact your local Allen-Bradley distributor or Rockwell Automation sales representative.

Table 1 - Rockwell Automation Industrial Network Resources

Resource	Description
http://www.ab.com/networks/	Rockwell Automation networks and communication website
http://www.rockwellautomation.com/services/networks/ http://www.rockwellautomation.com/services/security/	Rockwell Automation network and security services websites
http://www.ab.com/networks/architectures.html	Education series webcasts for IT and controls professionals
Industrial Automation Wiring and Grounding Guidelines, Publication 1770-4.1	Provides general guidelines for installing a Rockwell Automation industrial system.
Wiring and Grounding Guidelines, (PWM) AC Drives, Publication DRIVES-IN001	Describes wiring and grounding guidelines for Pulse Width Modulated (PWM) AC Drives
Product Certifications website, http://www.rockwellautomation.com/products/certification	Provides declarations of conformity, certificates, and other certification details.

Table 2 - ODVA Resources

Resource	Description
http://www.odva.org/	Open DeviceNet Vendors Association (ODVA) website
http://www.odva.org/default.aspx?tabid=54	The CIP Advantage website • CIP features and benefits • How to get started

Table 3 - Product Selection Resources

Resource	Description
Industrial Controls catalog website, http://www.ab.com/catalogs/	Industrial Controls catalog website
ArmorStart LT Distributed Motor Controller Selection Guide, Publication 290-SG001	Product selection guide

Rockwell Automation Support

Rockwell Automation provides technical information on the Web to assist you in using its products. At http://www.rockwellautomation.com/support/, you can find technical manuals, a knowledge base of FAQs, technical and application notes, sample code and links to software service packs, and a MySupport feature that you can customize to make the best use of these tools.

Installation Assistance

If you experience a problem within the first 24 hours of installation, contact Customer Support.

United States or Canada	1.440.646.3434
Outside United States or Canada	Use the Worldwide Locator at http://www.rockwellautomation.com/support/americas/phone_en.html, or contact your local Rockwell Automation representative.

New Product Satisfaction Return

Rockwell Automation tests all of its products to ensure that they are fully operational when shipped from the manufacturing facility. However, if your product is not functioning and needs to be returned, follow these procedures.

United States	Contact your distributor. You must provide a Customer Support case number (call the phone number above to obtain one) to your distributor to complete the return process.
Outside United States	Please contact your local Rockwell Automation representative for the return procedure.

Notes:

New and Updated Information

This table contains the changes made to this revision.

Topic	Page

Notes:

European Communities (EC) Directive Compliance

If this product has the CE mark it is approved for installation within the European Union and European Economic Area (EEA). It has been designed and tested to meet the following directives.

Low Voltage and EMC Directives

This product is tested to meet the European Union (EU) Council 2006/95/EC Low Voltage Directive and the EU Council 2004/108/EC Electromagnetic Compatibility (EMC) Directive by applying the following standard(s):

- Bulletin 290D_/291D_: EN 60947-4-1 — Low-voltage switchgear and controlgear — Part 4-1: Contactors and motor-starters — Electromechanical contactors and motor-starters.

- Bulletin 294D_: EN 61800-3 — Adjustable speed electronic power drive systems — Part 3: EMC product standard including specific test methods EN 61800-5-1:2003 — Adjustable speed electrical power drive systems — Part 5-1: Safety requirements — Electrical, thermal and energy.

This product is intended for use in an industrial environment.

Introduction

The ArmorStart LT is an integrated, pre-engineered, motor starting solution designed for use in material handling applications. ArmorStart LT is the latest addition to the ArmorStart portfolio. ArmorStart LT is a leader in the market place given its compact size and high performance features in network, I/O, and motor control. This manual will guide you through the features and functionality when installing the product. Thank you for choosing ArmorStart LT for your distributed motor control needs. If you have any questions please refer to the "Support Section" for contact information.

Important User Information 2
General Precautions 3
Precautions for Bulletin 294D Applications 3
Software Requirements 4
Additional Resources 4
Rockwell Automation Support 5

Summary of Changes

New and Updated Information 7

Preface

European Communities (EC) Directive Compliance 9
Low Voltage and EMC Directives 9
Introduction 10

Chapter 1

Product Overview

Description 18
Features 19
Feature Description 20
  Standard Features Across Product Family 20
  DeviceNet Network Capabilities 20
Factory-Installed Options 21
ArmorStart LT Characteristics 22
Catalog Number Explanation 23
ArmorStart LT Characteristics 24
Catalog Number Explanation 25
Basic Operation 26
  Group Motor Installations for USA and Canada Markets 26
  Control Circuit 26
  Motor Circuit 28
  Local I/O 28
  Overload Protection 28
Mode of Operation
Bulletin 290D/291D 28
  Full-Voltage Start 28
Mode of Operation
Bulletin 294D 29
  Sensorless Vector Performance 29
Status LEDs and Reset 30
  Electronic Data Sheet (EDS) 30
Fault Diagnostics 31
  Protection Faults 31
  Protection Warnings 32
Optional HOA Selector Keypad 34
  Keypad Local Control 34

Optional HOA Keypad Configuration (Bulletin 290D/291D only) 34
Optional HOA Selector Keypad with Jog Function (Bulletin 294D only) 36
Keypad Disable Parameter 37
Source Brake Contactor and Connector (Bulletin 294D only) 37

Chapter 2

Installation and Wiring

Receiving 39
Unpacking 39
Inspecting 39
Storing 39
Installation Precautions 40
Precautions for Bulletin 290D/291D Applications 40
Precautions for Bulletin 294D Applications 40
Dimensions 40
Dimensions 41
Connection Locations 43
Wiring Terminal Detail 44
Branch Circuit Protection 46
Typical System Example 47
ArmorConnect Power Media 48
ArmorConnect Cable Ratings 49
Branch Circuit Protection Requirements for ArmorConnect Three-Phase Power Media 49
Electrical Wiring 50
Group Motor Installations for USA and Canada Markets 55
Wiring 55
Cable Workmanship Guidelines 55
Service Space 56
Hand Operation (HOA) Considerations 56
General Wiring Considerations 56
Grounding 57
Grounding Safety Grounds 57
Grounding PE or Ground 57
Grounding Motors 57
Power Distribution 58
Delta/Wye with Grounded Wye Neutral 58
AC Line Voltage 58
Line Reactor 58
Bulletin 294D Motor Cable Considerations 59
Unshielded Cable 59
Shielded Cable 60
Recommended Cable Connectors/Glands 60
Recommended Cord Grips 61
Shield Terminating Connectors 61

Electromagnetic Compatibility (EMC) 62
General Notes (Bulletin 294D only) 62
Ethernet, DeviceNet, and I/O Connections 63
DeviceNet Connector (M18) 63
ArmorConnect Power Media Receptacles 64
Optional Locking Clip 65

Chapter 3

Product Commissioning

Configuring DeviceNet Address. 67
Manually Configure the Network Address Switches 67
DeviceNet™ Commissioning 69
Establishing a DeviceNet Node Address. 69
Node Commissioning using Hardware. 69
Node Commissioning using Software 69
Registering an EDS file 71
Using the Node Commissioning Tool Inside RSNetWorx for DeviceNet. 73
System Configuration 75

Chapter 4

Bulletin 290D/291D/294D Programmable Parameters

Electronic Data Sheet (EDS) 85
Basic Setup Parameters 85
Parameter Groups 86
ArmorStart LT DeviceNet Parameters 88
Introduction 88
Parameter Programming 88
Bulletin 290D/291D 88
Basic Status Group 88
Trip Status Group 93
Basic Configuration Group 97
Starter Protection Group 98
User I/O Configuration Group. 101
Miscellaneous Configuration Group 105
Advanced Configuration. 106
Bulletin 294D 122
Basic Status Group 122
Trip Status Group 128
Motor and Control Group 131
Speed Control Group. 133
Starter Protection Group 135
User I/O Configuration Group. 138
Miscellaneous Configuration Group 142
Advanced Configuration. 143

Chapter 5

Diagnostics

Overview 167
Status LEDs and Reset 167
Fault Diagnostics 168
Protection Faults 168
Quick Reference Troubleshooting 170
Fault LED Indications 170
Bulletin 290D/291D Faults 170
Bulletin 294D Faults 172

Chapter 6

Specifications

Bulletin 290D/291D 175
Motor Overload Trip Curves 180
Bulletin 100-K/104-K Life-Load Curves 181
Bulletin 294D 182
Motor Overload Trip Curves 188

Appendix A

Applying More Than One ArmorStart LT Motor Controller in a Single Branch Circuit on Industrial Machinery

Introduction 189
ArmorStart LT Product Family 190
Multiple-Motor Branch Circuits and Motor Controllers Listed for Group Installation – General 191
Maximum Fuse Ampere Rating According to 7.2.10.4(1) and 7.2.10.4(2) 193
Complete Text - 193
Explanatory Example 195
Input and Output Conductors of Bulletin 290D and 291D Controllers (a) 201
Input and Output Conductors of Bulletin 294D Controllers (b) 201
Combined Load Conductors (c) 201

Appendix B

CIP Information

High Level Product Description 203
Product Codes and Name Strings 203
CIP Explicit Connection Behavior 204
EDS Files 204
CIP Object Requirements 204
Identity Object 205
CLASS CODE 0x0001 205
Message Router 206
CLASS CODE 0x0002 206
DeviceNet Object 206
Assembly Object 207
CLASS CODE 0x0004 207
I/O Assemblies 207

Connection Object 216
CLASS CODE 0x0005 216
Discrete Input Point Object 219
CLASS CODE 0x0008 219
Discrete Output Point Object 220
CLASS CODE 0x0009 220
Discrete Output Point Object Special Requirements 221
Analog Input Point Object 225
CLASS CODE 0x000A
(Implemented in Bulletin 294D units only) 225
Analog Output Point Object 225
CLASS CODE 0x000B
(Implemented in Bulletin 294D units only) 225
Parameter Object 226
CLASS CODE 0x000F 226
Parameter Group Object 227
CLASS CODE 0x0010 227
Discrete Input
Group Object 228
CLASS CODE 0x001D 228
Discrete Output
Group Object 228
CLASS CODE 0x001E 228
Control Supervisor Object 229
CLASS CODE 0x0029 229
Overload Object 230
CLASS CODE 0x002C 230
DPI Fault Object 231
CLASS CODE 0x0097 231
DPI Alarm Object 235
CLASS CODE 0x0098 235
DeviceNet Interface Object 236
CLASS CODE 0x00B4 236
ZIP Object 238
CLASS CODE 0x032E 238
ZIP Enable 238
Attribute Symantics 240
Behavior 242

Appendix C

Using DeviceLogix™

Introduction 245
DeviceLogix Programming 246
DeviceLogix Programming Example 246

Notes:

Product Overview

Bulletin	**290/291**	**294**
Network Communications:		
EtherNet/IP	✓	✓
DeviceNet	✓	✓
Horsepower Range:		
0.5…5 Hp (0.37…3.3 kW)	✓	—
0.5…2 Hp (0.37…1.5 kW)		
Starting Method:		
Full-Voltage and Reversing	✓	—
VFD (V/Hz)	—	✓
Environmental Rating:		
IP66/UL Type 4/12	✓	✓
Control Voltage:		
24V DC	✓	✓
Internal Power Supply (sourced from 3-phase)	✓	✓
Operational Voltage Ratings:		
200…480V DC	✓	—
380…480V DC	—	✓
Rated for Group Motor Installations	✓	✓
Local logic using DeviceLogic™	✓	✓
Peer-to-Peer (ZIP)	✓ DeviceNet Version Only	✓ DeviceNet Version Only
I/O Capability:		
Six Self-Configurable Points	✓	✓
LED Status Indication	✓	✓
Gland Plate Entry:		
Conduit Entrance	✓	✓
ArmorConnect® Power and Control Media (option)	✓	✓
Quick Disconnects: I/O and Communications	✓	✓
EMI Filter	—	✓
Factory Installed Options:		
Manual-Auto-Off HOA Keypad	✓	✓
Source Brake Contactor	—	✓
Internal 24V DC Power Supply	✓	✓
Optional Motor Cables	✓	✓
ArmorConnect Gland	✓	✓

Description

ArmorStart LT is available with Full Voltage, Full Voltage Reversing, or Variable Speed motor control performance. It comes equipped with a UL Listed At-motor disconnect that supports a lock-out tag-out (LOTO) provision. ArmorStart LT is listed as suitable for group installations per UL and can be applied with either branch circuit breaker protection or fuse protection. It provides a robust IP66/ UL Type 4/12❶ enclosure suitable for water washdown environments in a single box construction that will minimize inventory needs. All external connections are made from the bottom of the unit minimizing accidental contact by moving equipment. ArmorStart LT as a standard will come with quick disconnect receptacles for the I/O and network connections. And finally, ArmorStart LT will include DeviceLogix, a high-performing local logic engine when a fast I/O response is critical to the application.

ArmorStart LT leverages the capabilities of the Rockwell Automation® Integrated Architecture so you can achieve an unmatched level of integration and ease of use. The architecture of ArmorStart LT allows Premiere Integration with Allen-Bradley® ControlLogix® or CompactLogix™ line of Automation Controllers and PLCs.

The ArmorStart LT is available with options that can further reduce installation and commissioning time and cost, such as:

- Quick disconnect receptacles for power, control, and motor connections
- Local Hand-Off-Auto keypad for manual control.
- Internal power supply (IPS) eliminating the need to run additional control power to each unit
- Bulletin 294 can be ordered with an electromechanical brake connection (source brake)
- EDS Tag Generator tool with RSLogix 5000

❶ The G2 gland option is rated IP66/ UL Type 4

Features

The ArmorStart LT provides many features and benefits that are unsurpassed in the market place:

- Robust IP66, UL Type 4/12 enclosure
- UL Listed, Suitable for Group Motor Applications
- UL Listed, At-motor disconnect switch
- Native support for DeviceNet
- 6 user configurable I/O points
- DeviceLogix
- Zone interlock protocol (ZIP)
- Optional internal power supply
- Optional electromechanical brake contactor
- Optional local control via Hand-Off-Auto keypad
- Optional quick disconnect for power and motor connections

IMPORTANT Not all options are available for Bulletin 290D/291D/294D. Refer to the catalog configurator for details.

Feature Description

Standard Features Across Product Family

UL Listed "Suitable for Group Motor Applications" — Where NFPA 70 (NEC) or 79 are required installation standards, this Listing allows two or more motors to be connected to the same branch circuit without individual motor branch short circuit or ground fault protection. Refer to Appendix A for details.

At-motor disconnect switch — ArmorStart LT offers a local ON/Off motor disconnecting means with lockout-tagout provision. Industrial standards require a local at-motor disconnect to be within eye sight of the motor for maintenance or other shutdown reasons. Refer to your installation code for details.

User configurable I/O — ArmorStart LT offers 6 user configurable I/O points to be used with sensors and actuators. By default all 6 points are configured as sinking 24V DC inputs. The user has the option to select any point as a sourcing 24V DC output.

DeviceNet Network Capabilities

The ArmorStart Distributed Motor Controller delivers advanced capabilities to access parameter settings and provides fault diagnostics, and remote start-stop control.

DeviceLogix — ArmorStart LT offers local programmable logic via DeviceLogix. DeviceLogix is a stand-alone program that resides within the ArmorStart LT. It is programmed locally using the Add-On-Profile and implements operations such as, AND, OR, NOT, Timers, Counters, Latches, and Analog operations. DeviceLogix can run as a stand-alone application, independent of the network or collaboratively with the PLC. However, unswitched control power must be maintained for DeviceLogix to operate.

Zone Interlock Protocol (ZIP) — The zone control capabilities of ArmorStart LT is ideal for motored conveyors. Zone Interlocking Parameters (ZIP) allow one ArmorStart to receive data directly, from up to four other DeviceNet nodes, without going through a network scanner. These direct communications between conveyor zones are beneficial in a merge, diverter, or accumulation conveyor application.

Quick disconnect for I/O and network — ArmorStart LT offers quick disconnect connectors for I/O and communications.

DeviceNet node address — ArmorStart LT offers external accessible address switches for device node address configuration. The address can be set statically or dynamically.

EMI filter — ArmorStart LT for VFD application (Bulletin 294) provides an internal EMI filter and is CE compliant. For CE compliant installations refer to the recommended EMI/RFI cord grip accessory. For availability of the quick

disconnect shielded motor cable contact your local sales representative for details.

Local and remote status and diagnostics — ArmorStart LT offers comprehensive status and diagnostics for I/O, Network, and device health via 12 LEDs found on the electronic control module (ECM). If a fault occurs a local fault reset button allows the user to quickly get the process started after corrective action is taken. The user can also configure the embedded web server to send an e-mail when a fault or warning occurs.

Gland plate entrance — ArmorStart LT offers different methods of connecting three-phase, control power, and motor. ArmorStart LT has conduit entrance openings, as standard.

Factory-Installed Options

Internal power supply (IPS) — ArmorStart LT offers the user an optional 24V DC internal power supply. The internal power supply provides all control and I/O power needs and is sourced from the incoming 3-phase power. This eliminates the need to run separate control power to each unit, reducing installation time and cost. The local at-motor disconnect will remove power from the motor terminals and outputs when in the OFF condition.

Hand/Off/Auto (HOA) keypad — ArmorStart LT offers an optional local Hand-Off-Auto keypad. This key pad allows local start/stop motor control regardless of PLC status. This option can be used for troubleshooting or maintenance operations. The HOA can also be disabled when local control is not allowed, using parameter 67.

Source brake — ArmorStart LT provides an optional, internally-controlled electromechanical motor brake contactor. The motor brake power is sourced from 3-phase power, L1 and L2.

Quick disconnect gland — ArmorStart LT offers a plug -n- play solution that simplifies wiring and installation. These factory installed quick disconnect receptacles provide connectivity to ArmorConnect® media for three-phase, control, and motor connections. The cables are ordered separately.

ArmorStart LT Characteristics

Figure 1 - Bulletin 290D/291D ArmorStart LT

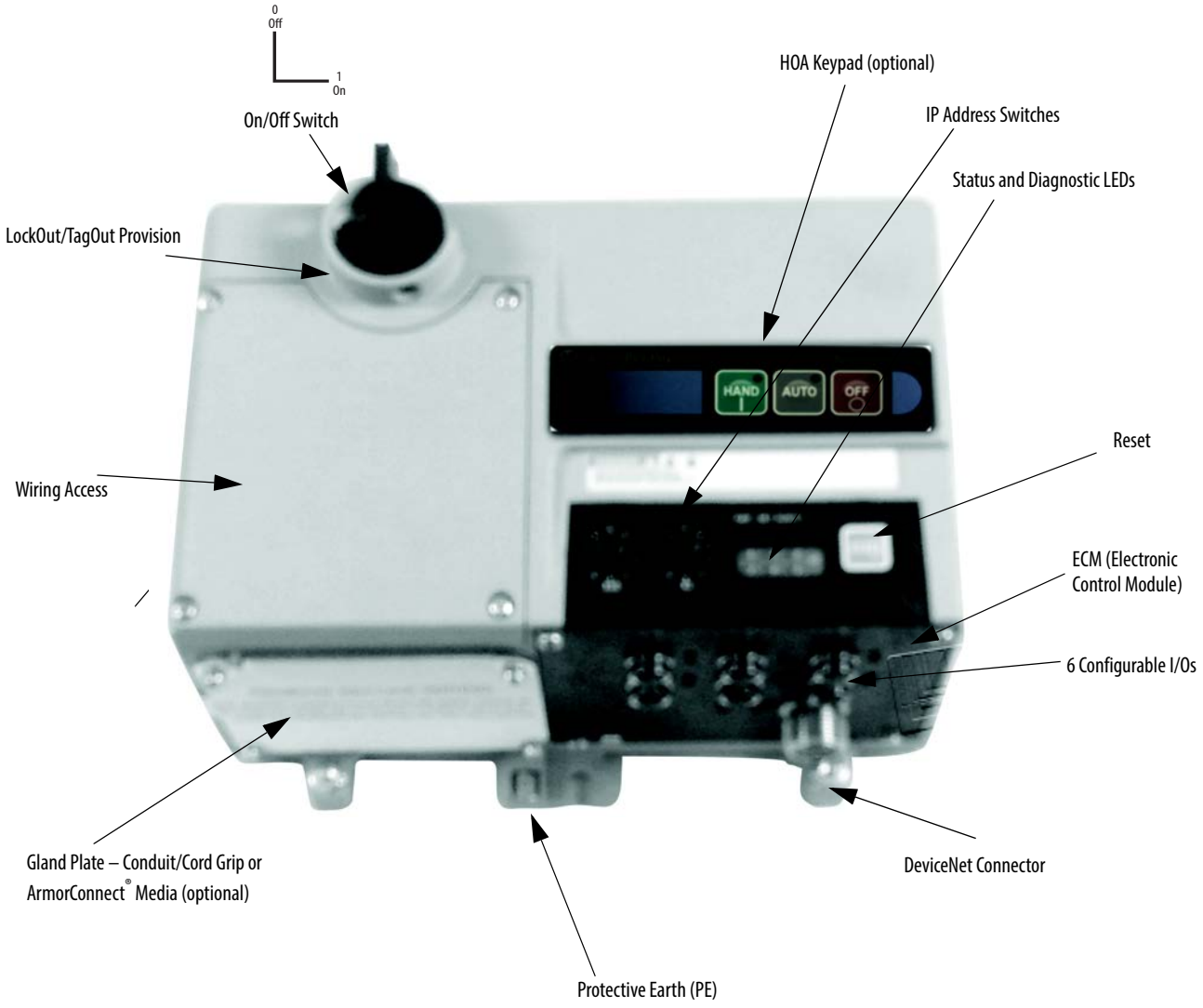

Catalog Number Explanation

Examples given in this section are for reference purposes. This basic explanation should not be used for product selection; not all combinations will produce a valid catalog number.

290	E	-	F	A	Z	-	G1	-	Option 1	-	Option 2
a	*b*		*c*	*d*	*e*		*f*		*g*		*h*

a

Bulletin Number	
Code	Description
290	Full-Voltage Starter
291	Reversing Starter

b

Communications	
Code	Description
E	EtherNet/IP
D	DeviceNet

c

Enclosure Type	
Code	Description
F	UL Type 4/12 ❶

d

Overload Selection	
Code	Description
A	0.25…3.5 A
B	1.1…7.6 A

e

Control Voltage	
Code	Description
Z	External 24V DC control power
P	Internal power supply

f

Gland Plate Options (Power and Motor)	
Code	Description
G1	Conduit entry
G2	ArmorConnect
G3	Gland Kit❷

g

Option 1	
Code	Description
3	Hand/Off/Auto selector keypad
3FR	Hand/Off/Auto selector keypad with Forward/Reverse

h

Option 2	
Code	Description
blank ❸	No option

❶ IP66/UL Type 4 is available with all gland options. UL Type 4/12 is available with G1 and G3 gland option.
❷ See selection guide 290-SG001_-EN-P Accessories section for gland configurations and ordering
❸ Leave blank unless there is a customer-specific option defined by the factory.

ArmorStart LT Characteristics

Figure 2 - Bulletin 294D ArmorStart LT

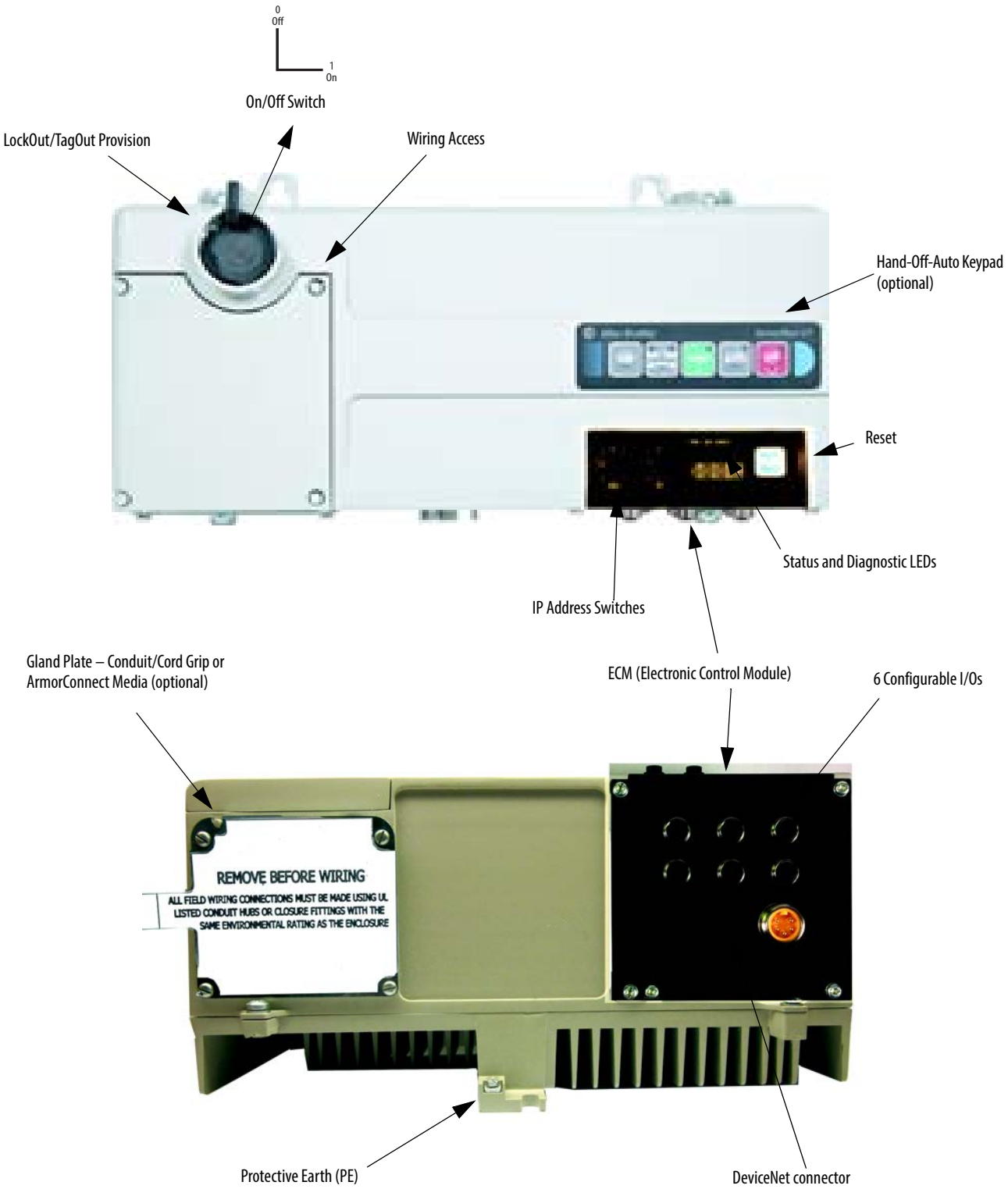

Bottom View

Catalog Number Explanation

Examples given in this section are for reference purposes. This basic explanation should not be used for product selection; not all combinations will produce a valid catalog number.

294	E	-	F	D1P5	Z	-	G1	-	Option 1	-	Option 2
a	*b*		*c*	*d*	*e*		*f*		*g*		*h*

a

Bulletin Number	
Code	Description
294	VFD Starter

b

Communications	
Code	Description
E	EtherNet/IP
D	DeviceNet

c

Enclosure Type	
Code	Description
F	UL Type 4/12 ❶

d

Output Current	
Code	Description
D1P5	1.5 A (0.4 kW), 0.5 Hp
D2P5	2.5 A (0.75 kW), 1.0Hp
D4P2	3.6 A (1.5 kW), 2.0Hp

e

Control Voltage	
Code	Description
Z	External 24V DC control power
P	Internal power supply

f

Gland Plate Options (Power and Motor)	
Code	Description
G1	Conduit entry
G2	ArmorConnect
G3	Gland Kits ❷

g

Option 1	
Code	Description
3	Hand/Off/Auto selector keypad with Jog function

h

Option 2	
Code	Description
SB	Source Brake
blank ❸	No option

❶ IP66/UL Type 4 is available with all gland options. UL Type 4/12 is available with G1 and G3 gland option.
❷ Leave blank unless there is a customer-specific option defined by the factory.

Basic Operation

Group Motor Installations for USA and Canada Markets

The ArmorStart LT Distributed Motor controllers are listed for use with each other in group installations per NFPA 79, Electrical Standard for Industrial Machinery and NFPA 70, the National Electrical Code. When applied according to the group motor installation requirements, two or more motors are permitted on a single branch circuit. Group Motor Installation has been successfully used for many years in the USA and Canada.

Note: For additional information regarding group motor installations with the ArmorStart LT Distributed Motor Controller, see Appendix A.

Control Circuit

ArmorStart LT accepts a 24V DC Class 2 input power supply for switched and unswitched power. The control voltage provides power to the inputs (unswitched) and outputs (switched). Unswitched control voltage is used to ensure no loss of network connectivity, sensor, or other field input status under normal operation. The control power terminal connections are labeled A1, A2, and A3. Switched power is identified as (+A1) (-A2). Unswitched power is identified as (+A3) (-A2).

As an option, ArmorStart LT can be supplied with an internal power supply (IPS) eliminating the need for an external control power. The IPS is sourced from the line side of 3-phase power and is not impacted by the status of the local at-motor disconnect switch.

Figure 3 - Control Circuit Wiring Diagram — Single External Power Supply

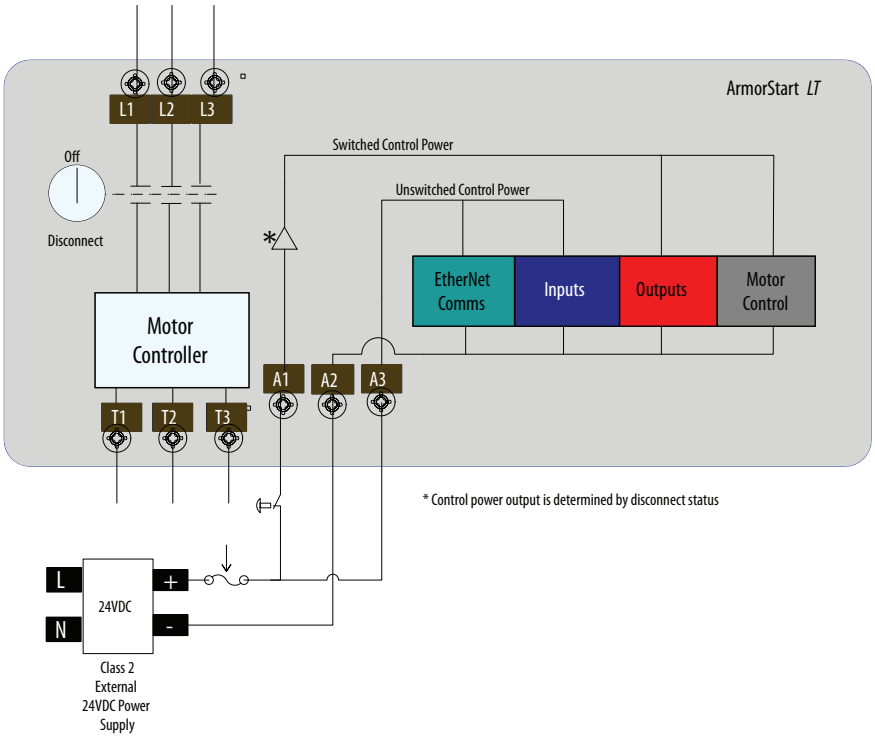

Figure 4 - Control Circuit Wiring Diagram — Multiple External Power Supplies

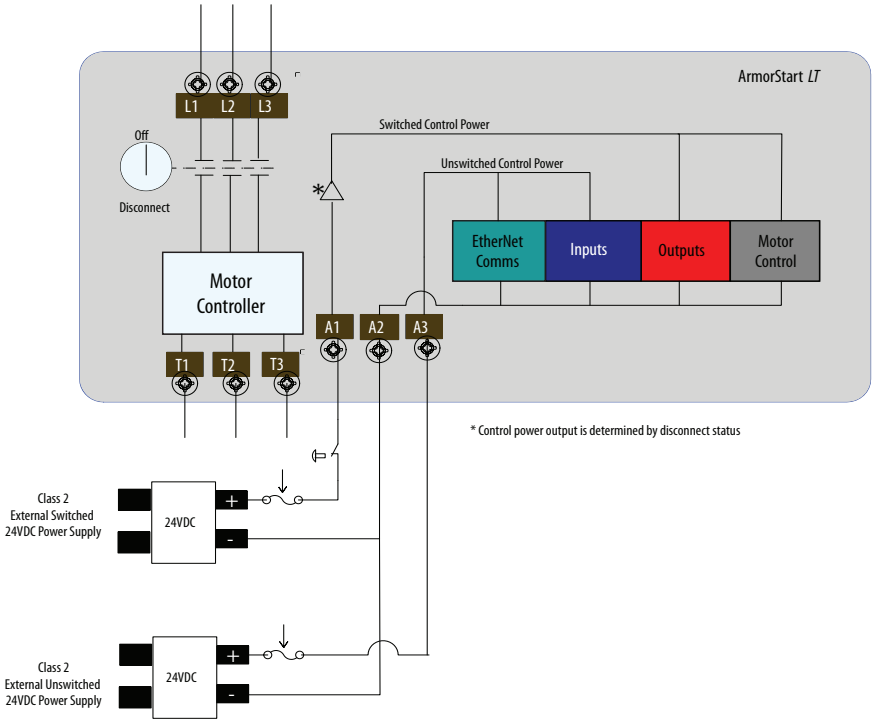

Figure 5 - Control Circuit Wiring Diagram — Internal Power Supply (optional)

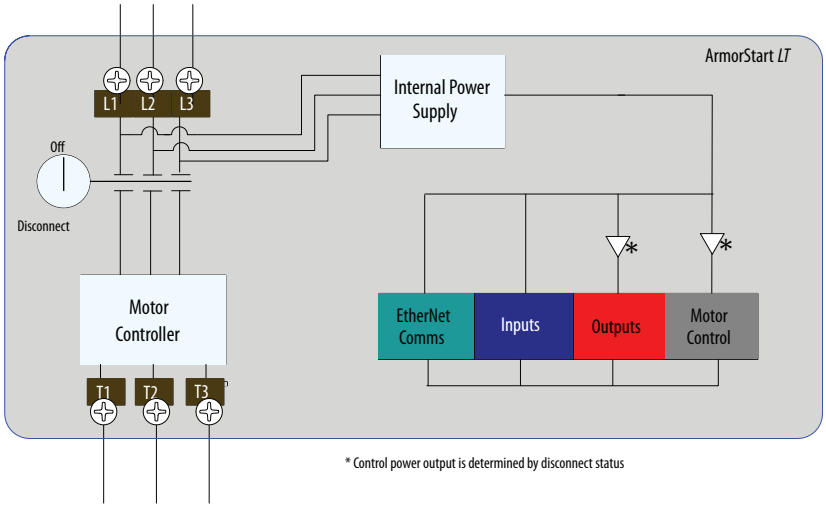

Motor Circuit

The ArmorStart LT Distributed Motor Controllers are rated to operate the following types of three-phase squirrel-cage induction motors:

Bulletin 290D/291D:
0.5 Hp (0.37 kW) to 5 Hp (3 kW) @ 480/277V AC
Bulletin 294D:
0.5 Hp (0.37 kW) to 2 Hp (1.5 kW) @ 480/277V AC

Local I/O

The ArmorStart LT provides as standard, 6 user configurable I/O points. By default, all points are configured as an Input. The user will need to refer to parameter 49 [IOPointConfiguration], to define an output point.

Overload Protection

The ArmorStart LT Distributed Motor Controller incorporates, as standard, electronic motor overload protection. This overload protection is accomplished electronically with an I^2t algorithm. The ArmorStart LTs overload protection is programmable via the communication network, providing the user with greater flexibility.

The Bulletin 290D/291D includes programmable overload Class 10, 15, and 20 protection. The Bulletin 294D provides overload protection: 150% for 60 s and 200% for 3 s.

Refer to Chapter 6, Specifications, for additional information.

Mode of Operation Bulletin 290D/291D

Full-Voltage Start

This method is used in applications requiring across-the-line starting, in which full inrush current and locked-rotor torque are realized. The ArmorStart LT Bulletin 290D offers full-voltage starting and Bulletin 291D offers full-voltage starting for reversing applications, from 0.5 Hp (0.37 kW) to 5 Hp (3 kW) at 480Y/277V AC, 3-phase power.

Figure 6 - Full-Voltage Start

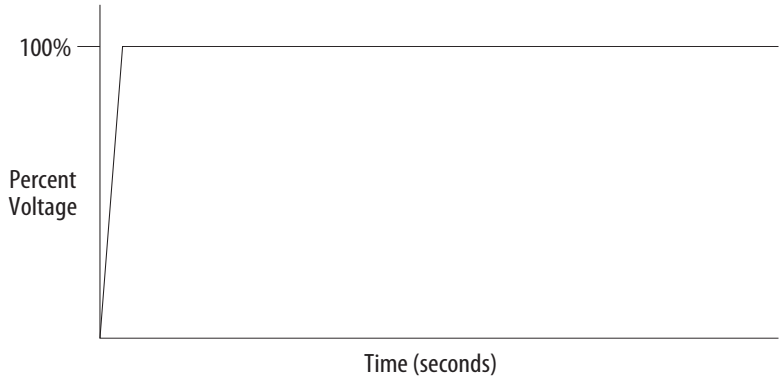

Mode of Operation Bulletin 294D

Sensorless Vector Performance

Using a distributed AC drive to operate mechanical equipment at optimum speed helps reduce energy costs and eliminates mechanical wear and tear that can occur in the mechanical parts. The advance monitoring found in ArmorStart LT protects critical equipment against unplanned downtime with advanced diagnostics and notification of irregular operating parameters. ArmorStart LT provides open-loop speed regulation (V/Hz) with slip compensation. This provides excellent speed regulation and high levels of torque across the entire speed range of the drive, and improved speed regulation as loading increases.

Open Loop Speed Regulation with Slip Compensation allows the VFD to automatically adjust the output frequency to compensate for speed changes due to motor loading. This feature utilizes an open loop, current feedback, slip compensation circuit. Slip Compensation works as an open loop speed regulator that increases the output frequency of the drive as the load is increased, or decreases the frequency as the load drops. This feature is used where the motor must run at a relatively constant speed regardless of torque output.

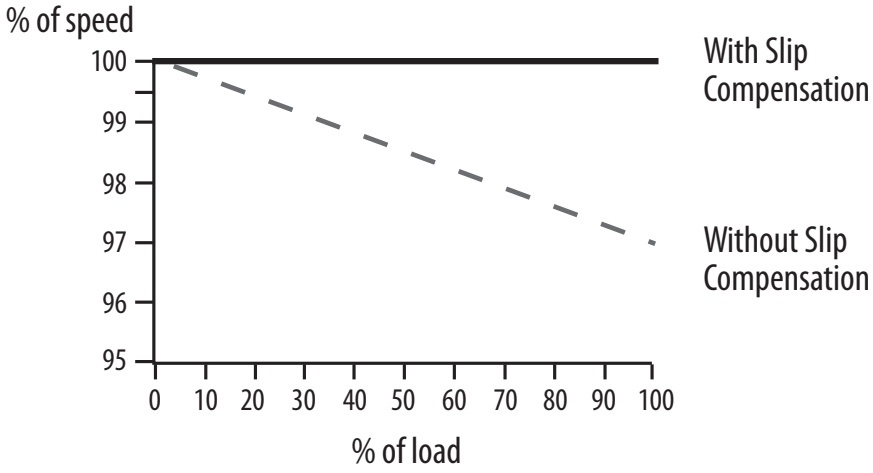

Status LEDs and Reset

Figure 7 - Status, Diagnostic LEDs, and Reset

ArmorStart LT provides comprehensive status and diagnostics via 12 individually marked LEDs shown in Figure 7, located on the ECM module. In addition, a local reset is provide for clearing of faults. Table 4 details the diagnostic and status LEDs.

Table 4 - ArmorStart LT Status and Diagnostics Indicators

Indicator	Description	Color_1	Color_2
PWR LED	The bicolor (green/yellow) LED shows the state of the control voltage. When LED is off, switched and/or unswitched power is not present.	Solid green is illuminated when switched and unswitched control power is within its specified limits and has the proper polarity.	Solid yellow is illuminated when switched or unswitched control power is outside its specified limits or has incorrect polarity.
RUN/FLT LED	The bicolor (green/red) LED combines the functions of the Run and Fault LEDs.	Solid green is illuminated when a Run command is present.	The LED will blink red in a prescribed fault pattern when a protection fault (trip) condition is present. See Table 5 for fault blink patterns.
NET – Network Status LED	The bicolor (green/red) LED indicates the status of the CIP network connection. See Network Status Indicator for further information. Flashing bicolor (red/green) indicates a self-test on power up.	Flashing green indicates an IP address is configured, no CIP connections are established, and an Exclusive Owner connection has not timed out. Steady green indicates at least one CIP connection is established and an Exclusive Owner connection has not timed out.	Flashing red indicates the connection has timed out. Steady Red indicates a duplicate IP Address detected.
I/O Status Enunciators 0…5 LEDs	Six yellow LEDs are numbered 0…5 and indicate the status of the input/output connectors. One LED for each I/O point.	Yellow is illuminated when input is valid or output is on.	Off when input is not valid or the output is not turned on.
Reset Button	The blue reset button will cause a protection fault reset to occur.	—	—

Electronic Data Sheet (EDS)

ArmorStart LT EtherNet/IP has an embedded electronic data sheet. An EDS consists of specially formatted text files, as defined by the CIP™. EDS files contain details about the readable and configurable parameters of the device. They also provide information about the I/O connections that the device supports and the content of the associated data structures. EDS are used by device configuration tools, such as RSNetWorx™, and data servers such as RSLinx® Classic.

EDS files for all ArmorStart LT devices can be uploaded directly from the device via the web server interface. Rockwell Automation product EDS files are also available on the internet at: http://www.ab.com/networks/eds.

Fault Diagnostics

Fault diagnostics capabilities built in the ArmorStart LT Distributed Motor Controller are designed to help you pinpoint a problem for easy troubleshooting and quick re-starting.

Protection Faults

Protection faults will be generated when potentially dangerous or damaging conditions are detected. Protection faults are also known as “trips” or “faults”. These faults will be reported in multiple formats, including:

- Bit enumeration in the TripStatus parameter 16 in DeviceLogix
- In the ArmorStart LT web server for ArmorStart EtherNet/IP version
- As a sequence of LED flashes on the ECM

Table 5 - Protection Faults

LED Flash	Bit Enumeration	290D/291D Trip Status Bits	294D Trip Status Bits
1	0	OverloadTrip ❶	OverloadTrip ❶
2	1	PhaseLossTrip	PhaseLShortTrip
3	2	UnderPowerTrip ❶	UnderPowerTrip ❶
4	3	SensorShortTrip ❶	SensorShortTrip ❶
5	4	PhaseImbalTrip	OverCurrentTrip
6	5	NonVolMemoryTrip ❶	NonVolMemoryTrip ❶
7	6	reserved	ParamSyncTrip ❶
8	7	JamTrip	DCBusOrDiscnnct ❶
9	8	StallTrip	StallTrip ❶
10	9	UnderloadTrip	OverTemperature ❶
11	10	reserved	GroundFault ❶
12	11	reserved	RestartRetries
13	12	reserved	DriveHdwFault ❶
14	13	OutputShortTrip ❶	OutputShortTrip ❶
15	14	UserDefinedTrip	UserDefinedTrip
16	15	HardwareFltTrip ❶	HardwareFltTrip ❶

❶ Cannot be disabled.

Protection Warnings

ArmorStart LT supports fault warnings. Refer to the WarningStatus parameter (param 17).

The following describes the warning conditions for 290D/291D units:

Bit Number	Bit Enumeration	Description
0	OverloadWarning	This warning is generated when the value of %ThermalUtilized (param n5) becomes greater than the value of the OLWarningLevel parameter (param 69).
2	UnderPowerWarn	This warning is generated when switched power dips below 19.2 V for more than 4 ms.
4	PhaseImbalWarn	This warning is generated in firmware by monitoring the relative levels of the three phase currents. When the % imbalance becomes greater than the hard coded warning limit, the warning is generated.
7	JamWarning	This warning is generated in firmware when RMS current is greater than the JAMWarningLevel (param 73) after the JamInhibitTime (param 70) has expired.
9	UnderloadWarning	This warning is generated in firmware when RMS current is less than the ULWarningLevel (param 79) after the ULInhibitTime (param 76) has expired.
14	UnswitchedPwrWarn	This warning is generated when unswitched power dips below 19.2 V for 4 ms.
15	ConfigWarning	This warning is generated when parameter configuration values that are inconsistent with certain device options are written. This warning may not be disabled.

The following describes the warning conditions for 294D units:

Bit Number	Bit Enumeration	Description
2	UnderPowerWarn	This warning is generated when switched power dips below 19.2 V for more than 4 ms.
6	DriveParamInit	This warning is generated when a Full Control Module to Drive parameter sync is in progress, either on power up, or after an internal comms loss has been remedied.
12	FanWarning	This warning indicates that either the fan is running between 62% and 70% of rated RPM or that the “kick start” was needed to turn on the fan.
14	UnswitchedPwrWarn	This warning is generated when unswitched power dips below 19.2 V for 4 ms.
15	ConfigWarning	This warning is generated when parameter configuration values that are inconsistent with certain device options are written. This warning may not be disabled.

Table 6 - Configuration Warnings

The following conditions will result in a configuration warning being generated:

Warning Type	Warning Code	Description
BrakeConfig	41	If Param 89 (BrakeMode) is set to anything other than 0=NoBrakeControl when brake hardware not present OR If Param 89 (BrakeMode) is set to 1=AboveFrequency and Param 90 (BrakeFreqThresh) is set to a value above Param 35 (MaximumFreq) OR If Param 89 (BrakeMode) is set to 2=AboveCurrent and Param 91 (BrakeCurrThresh) is set to a value above Param 31 (CurrentLimit)
IOPointConfig	42	If Param 58 (Input00Function) thru Param 63 (Input05Function) are set to 5=BrakeRelease and no brake is present OR If Param 58 (Input00Function) thru Param 63 (Input05Function) are set t0 anything other than 0=NoFunction while the corresponding bit in Param 49 (IOPointConfigure) is set to configure it as an output.
ZIPConfig	43	If Param 114 (Zone1PtMask) thru Param 121 (Zone4PtOffset) are set to have a mapping overlap, and Param 143 (ZoneCtrlEnable) set to Enabled OR If Param 122 (Zone1AnalogMask) thru Param 129 (Zone4AnOffset) are set to have a mapping overlap, and Param 143 (ZoneCtrlEnable) set to Enabled
JamConfig	44	If Param 72 (JamTripLevel) is less than Param 73 (JamWarningLevel)
UnderLoadConfig	45	If Param 78 (ULTripLevel) is greater than Param 79 (ULWarningLevel)

Optional HOA Selector Keypad

Keypad Local Control

The HOA Selector Keypad allows for local start/stop/jog control in forward/reverse motor direction. If two buttons are pressed simultaneously, this action is ignored by the device unless one of the buttons is the Off button. If the Off button is pressed at any time, the unit will go to the off state. When local Hand mode is entered, speed reference is switched to Internal Frequency. When in "Auto" mode the unit the speed reference is switched to the mode specified in parameter 33 "SpeedReference".

	HAND	The Hand key will initiate starter operation
	AUTO	The Auto key allows for Start/Stop control via the communications network
	OFF	If the starter is running, pressing the OFF key will cause the starter to stop.
	DIR Arrow	The Dir arrow selects the direction of the motor, either forward or reverse.
	JOG	When pressed, JOG will be initiated if no other control devices are sending a stop command. Releasing the key will cause the drive to stop, using selected stop mode.

Optional HOA Keypad Configuration (Bulletin 290D/291D only)

The ArmorStart LT offers optional factory-installed Hand/Off/Auto (HOA) configurations: Standard (Bulletin 290D) and Forward/Reverse (Bulletin 291D).

Figure 8 - Bulletin 290D Standard HOA

Figure 9 - Bulletin 291D Forward/Reverse HOA

Bulletin 290D

With the KeypadMode parameter (parameter 66) set to 1 = Maintained, pressing the buttons reacts like a maintained switch.

Key Press	Current Mode		
	OFF	**HAND**	**AUTO**
AUTO	Auto Mode — Motor Off	—	—
HAND	If no fault, Motor On	—	—
OFF	—	Motor turns Off	Motor turns Off
FAULT PRESENT	—	Motor turns Off	Motor turns Off

With the KeypadMode parameter (parameter 66) set to 0 = Momentary, pressing the buttons reacts like a momentary switch.

Key Press	Current Mode		
	OFF Key	**HAND**	**AUTO Key**
NO KEY PRESSED	—	Motor Off	—
AUTO	Auto Mode — Motor Off	—	—
HAND	If no fault, Motor On	—	—
OFF	—	Motor Off	Motor Off
PROTECTION FAULT PRESENT	—	Motor Off	—

Bulletin 291D

With the KeypadMode parameter (parameter 66) set to 1 = Maintained, pressing the buttons reacts like a maintained switch.

Key Press	Current Mode		
	OFF	**HAND**	**AUTO**
FWD/REV	FWD LED Set REV LED REV LED Set FWD LED	—	—
AUTO	Auto Mode — Motor Off	—	—
HAND	If no fault, Motor On	—	—
OFF	Ignore	Motor Off	Motor Off
PROTECTION FAULT PRESENT	Ignore	Motor Off	—

With the KeypadMode parameter (parameter 66) set to 0 = Momentary, pressing the buttons reacts like a momentary switch.

Key Press	Current Mode		
	OFF	**HAND**	**AUTO**
NO KEY PRESSED	—	Motor Off	—
FWD/REV	FWD LED Set REV LED REV LED Set FWD LED	—	—
AUTO	Auto Mode — Motor Off	—	—
HAND	If no fault, Motor On	—	—
OFF	—	Motor Off	Motor Off
PROTECTION FAULT PRESENT	—	Motor Off	—

Optional HOA Selector Keypad with Jog Function (Bulletin 294D only)

The HOA Selector Keypad with Jog function allows for local start/stop control with capabilities to jog in forward/reverse motor directions.

Figure 10 - Bulletin 294D Jog/Forward/Reverse HOA

Keypad Local Control

With the KeypadMode parameter (parameter 66) set to 1 = Maintained, pressing the buttons reacts like a maintained switch.

Key Press	Current Mode			
	OFF	HAND	JOG	AUTO
NO KEY PRESSED	—	—	Motor Off	—
FWD/REV	FWD LED Set REV LED REV LED Set FWD LED	FWD LED Set REV LED REV LED Set FWD LED	—	—
JOG	If no fault, Jog Motor	—	—	—
AUTO	Auto Mode — Motor Off	—	—	—
HAND	If no fault, Motor On	—	—	—
OFF	—	Motor Off	Motor Off	Motor Off
PROTECTION FAULT PRESENT	—	Motor Off	Motor Off	—

With the KeypadMode parameter (parameter 66) set to 0 = Momentary, pressing the buttons reacts like a momentary switch.

Key Press	Current Mode			
	OFF	HAND	JOG	AUTO
NO KEY PRESSED	—	Motor Off	Motor Off	—
FWD/REV	FWD LED Set REV LED REV LED Set FWD LED	FWD LED Set REV LED REV LED Set FWD LED	—	—
JOG	If no fault, Jog Motor	—	—	—
AUTO	Auto Mode — Motor Off	—	—	—
HAND	If no fault, Motor On	—	—	—
OFF	—	Motor Off	Motor Off	Motor Off
PROTECTION FAULT PRESENT	—	Motor Off	Motor Off	—

IMPORTANT If multiple buttons are pressed at the same time, the software interprets this as a "no button pressed" condition. The only exception to this rule is if multiple buttons are pressed and one of them is the Off button. If the Off button is pressed in combination with any combination of other buttons, the processor will behave as if the Off button were pressed by itself.

Keypad Disable Parameter

"Keypad Disable", parameter 67, only inhibits the "HAND", "FWD", "REV" and "JOG" buttons on the HOA keypad. The "OFF" and "AUTO" buttons are always enabled, even if parameter 67 is set to "1=Disable". The keypad OFF button can not be disabled.

Source Brake Contactor and Connector (Bulletin 294D only)

An internal contactor is used to switch the electromechanical motor brake On/Off. The motor brake contactor is actuated via the internal power which supplies L1 and L2 voltage to the mechanical brake in the motor. The source brake can be configured for independent control via parameter configuration.

The internal contactor, electromechanical motor brake, and associated motor branch cable are protected by the branch circuit protective device. There is no resettable or replaceable protective device in ArmorStart LT.

WARNING: If the branch circuit protective device trips, the user must ensure that the Source Brake function is still operational prior to putting the equipment back in service. If the source brake function is not working properly, loss of brake function or motor damage can occur.

Notes:

Installation and Wiring

Receiving

It is the responsibility of the user to thoroughly inspect the equipment before accepting the shipment from the freight company. Check the item(s) received against the purchase order. If any items are damaged, it is the responsibility of the user not to accept delivery until the freight agent has noted the damage on the freight bill. Should any concealed damage be found during unpacking, it is also the responsibility of the user to notify the freight agent. The shipping container must be left intact and the freight agent should be requested to make a visual inspection of the equipment.

Unpacking

Remove all packing material, wedges, or braces from within and around the ArmorStart LT distributed motor controller and other device(s). Check the contents of the package to see if all contents are included. Contact your local Allen-Bradley representative if any items are missing.

IMPORTANT Before the installation and start-up of the drive, a general inspection of mechanical integrity (i.e. loose parts, wires, connections, packing materials, etc.) must be made.

Inspecting

After unpacking, check nameplate catalog number(s) of the item(s) against the purchase order. See Chapter 1 for an explanation of the catalog numbering system which will aid in nameplate interpretation.

Storing

The controller should remain in the shipping container prior to installation. If the equipment is not to be used for a period of time, it must be stored according to the following instructions in order to maintain warranty coverage.

- Store in a clean, dry location.
- Store within an ambient temperature range of –25...+85 °C (–13...+185 °F).
- Store within a relative humidity range of 0...95%, noncondensing.
- Do not store equipment where it could be exposed to a corrosive atmosphere.
- Do not store equipment in a construction area.

Installation Precautions

The following statements must be read and understood.

ATTENTION: The earth ground terminal shall be connected to a solid earth ground via a low-impedance connection.

ATTENTION: Copper ground conductors are recommended. The ArmorStart LT external protective earth (PE) pad is aluminum. Refer to your local electrical installation standard for proper bonding and protection when dissimilar metals are used.

ATTENTION: An incorrectly applied or installed controller can damage components or reduce product life. Wiring or application errors, such as undersizing the motor, incorrect or inadequate AC supply, or out of range ambient temperatures, may result in malfunction of the system.

Precautions for Bulletin 290D/291D Applications

SHOCK HAZARD: To prevent electrical shock, open appropriate machine disconnect switch prior to connecting and disconnecting cables. Risk of shock — environment rating may not be maintained with open receptacles.

Precautions for Bulletin 294D Applications

SHOCK HAZARD: The drive contains high voltage capacitors which take time to discharge after removal of mains supply. Before working on drive, ensure isolation of mains supply from line inputs (L1, L2, L3). Wait three minutes for capacitors to discharge to safe voltage levels. Failure to do so may result in personal injury or death.

Dimensions

ArmorStart LT consists of three components that are non-replaceable. The Electronic Control Module (ECM); a gland plate for wire entry; and the aluminum alloy enclosure which makes up the back cover, top housing, and wiring access door. The ECM includes communications, discrete I/O, status and diagnostic LEDs, and the node address switches. All mating surfaces are sealed using foam in place gasket or o-ring.

Dimensions

Dimensions are shown in millimeters (inches). Dimensions are not intended to be used for manufacturing purposes. All dimensions are subject to change.

Figure 11 - Dimensions for Bulletin 290D/291D

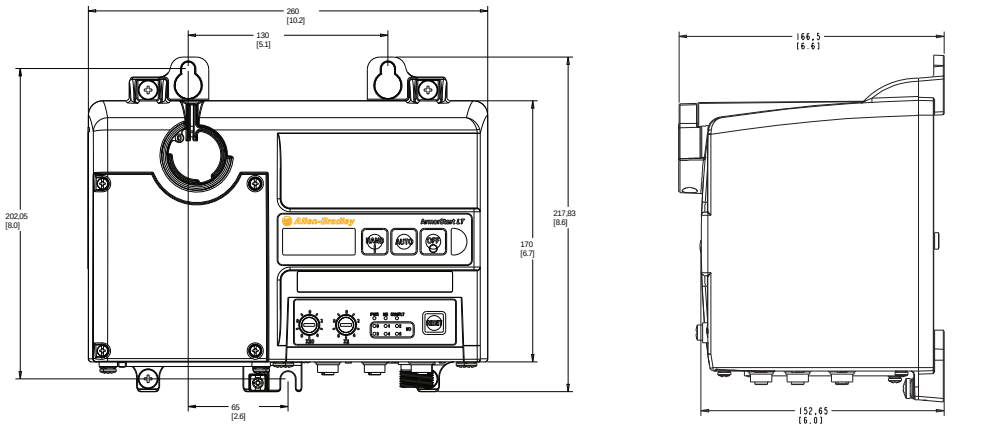

Front View

Right Side View

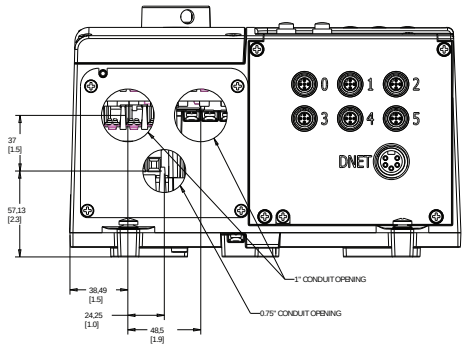

Conduit Gland Entrance

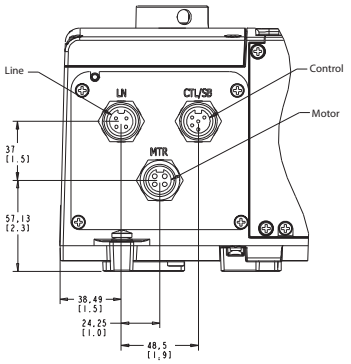

ArmorConnect Media Gland Entrance (optional)

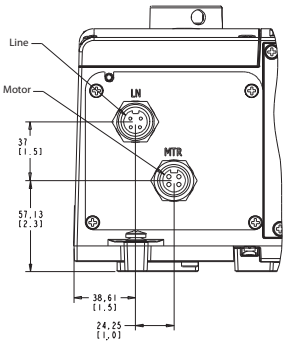

ArmorConnect Internal Power Supply Gland Plate (optional)

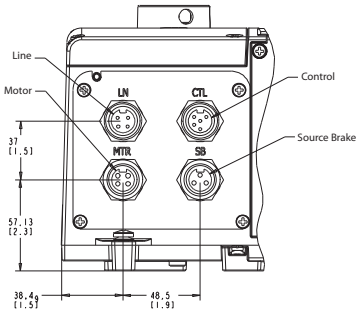

ArmorConnect Source Brake Gland Plate (optional)

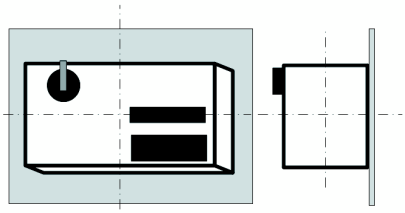

IMPORTANT For proper heat dissipation and product operation, mount the ArmorStart LT in the vertical orientation as shown.

Figure 12 - Dimensions for Bulletin 294D

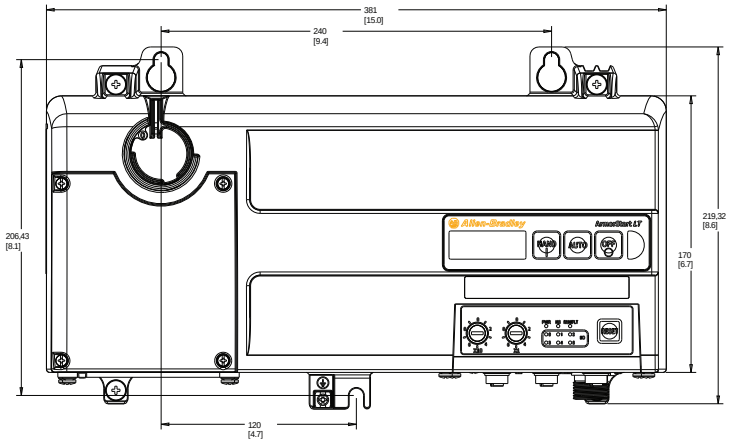

Front View

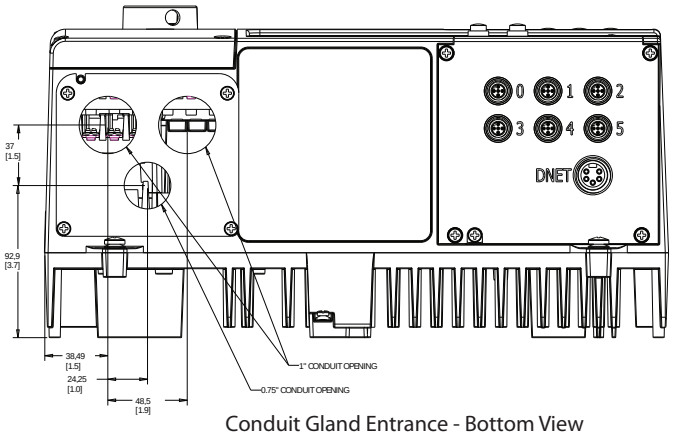

Conduit Gland Entrance - Bottom View

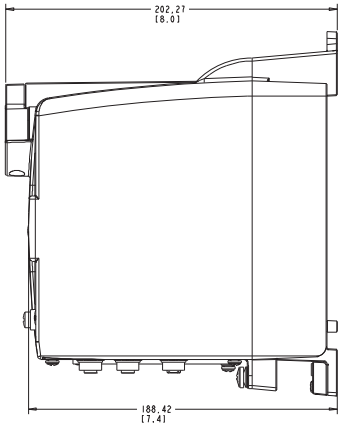

Right Side View

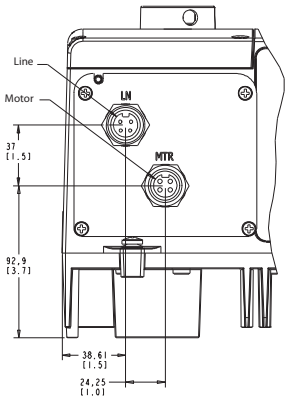

ArmorConnect Internal Power Supply Gland Plate (optional)

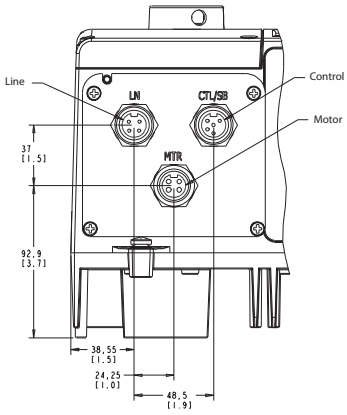

ArmorConnect Media Gland Entrance (optional)

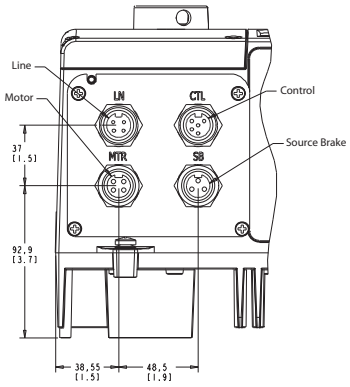

ArmorConnect Gland Entrance with Source Brake (optional)

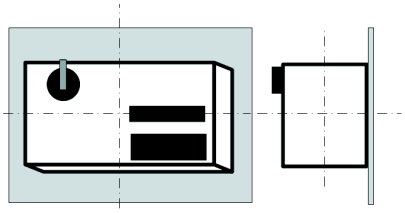

IMPORTANT For proper heat dissipation and product operation, mount the ArmorStart LT in the vertical orientation as shown.

Dimensions are shown in millimeters (inches). Dimensions are not intended to be used for manufacturing purposes. All dimensions are subject to change.

Figure 13 - ArmorStart LT Gland Plate Matrix

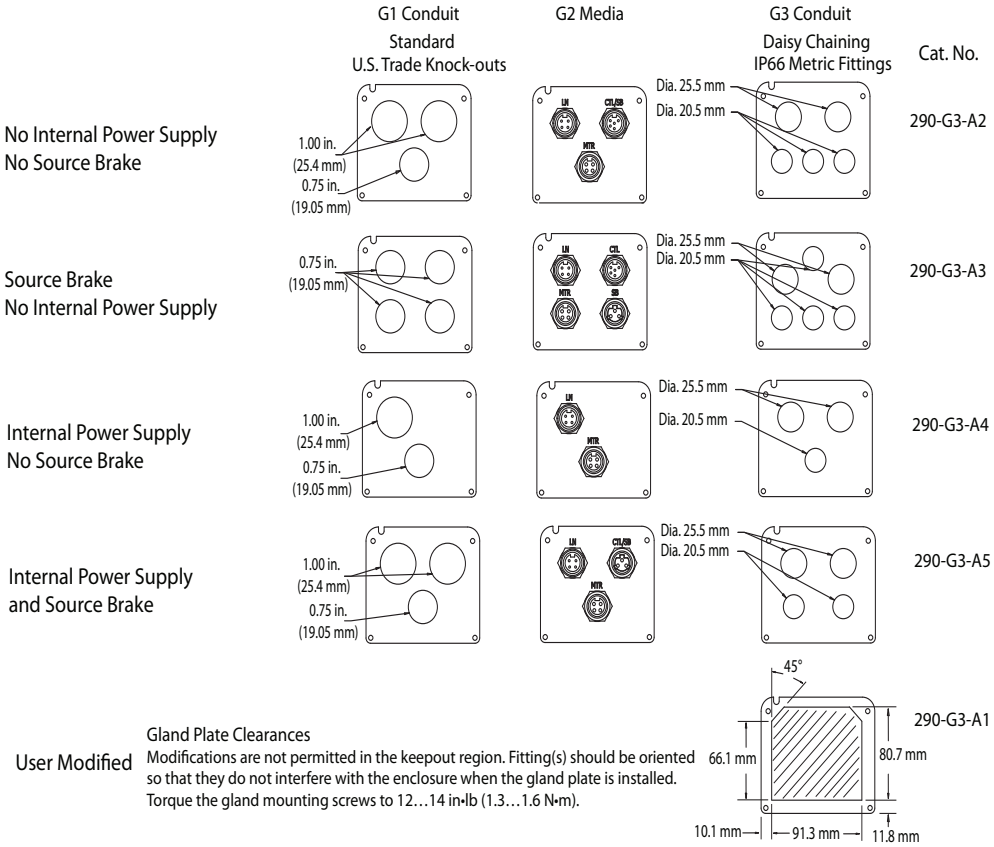

Connection Locations

Figure 14 - Internal Power, Control, and Ground Locations

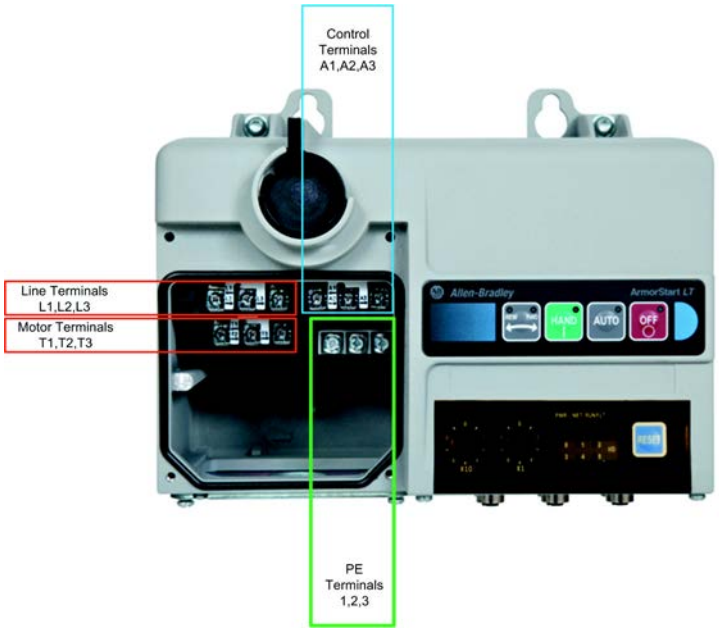

Figure 15 - Gland Connection

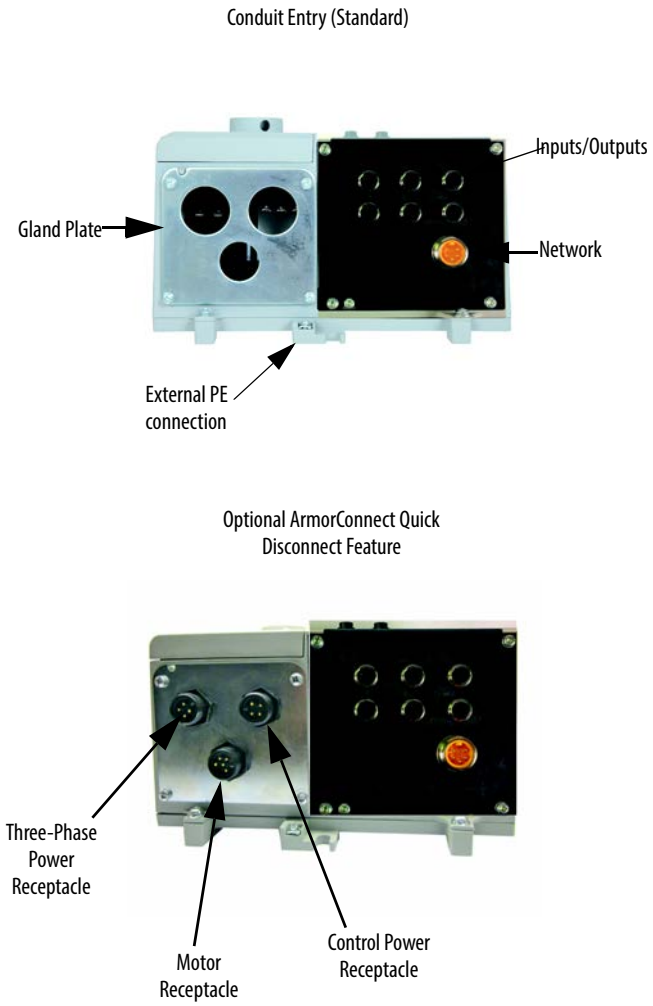

Wiring Terminal Detail

The power, control, and ground wire capacity and the tightening torque requirements are shown in Table 8. The maximum number of connections per terminal are shown in Table 7. As shown in Figure 16 all the terminals are found in the wiring area. Access can be gained by removing the terminal access cover plate.

Figure 16 - ArmorStart LT Power and Control Terminals

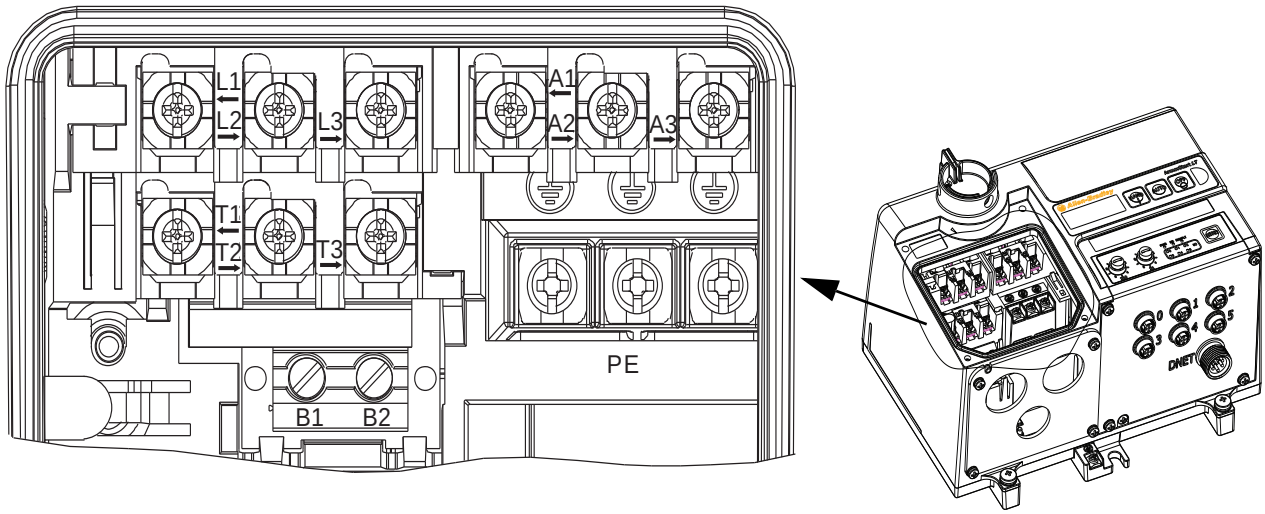

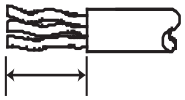

Wire Strip Length
0.35 ± 0.01 in.
(9 ± 0.2 mm)

Table 7 - Power, Control, and Ground Terminal Designations

Terminal Designations	Wires/Connections	Description
A1	2	Switched 24V DC Control Power (+) ❶
A2	2	Control Power Common (–) ❶
A3	2	Unswitched 24V DC Control Power (+) ❶
PE	2	Ground
L1	2	Line Power – Phase A
L2	2	Line Power – Phase B
L3	2	Line Power – Phase C
T1	1	Motor Connection – Phase A
T2	1	Motor Connection – Phase B
T3	1	Motor Connection – Phase C
B1	1	Source Brake Connection – B1 ❷
B2	1	Source Brake Connection – B2 ❷

❶ When internal power supply option is selected, no connection is made here.
❷ Available only with Bulletin 294E.

Table 8 - Power, Control, and Ground Wire Capacity and the Tightening Torque Requirements

Power Terminals	Wire Size	(2) #18…#10 AWG (0.8…5.2 mm^2) per terminal
	Tightening Torque	10.6 +/– 2 lb•in (1.2 +/– 0.2 N•m)
Motor Terminals	Wire Size	#18…#10 AWG (0.8…5.2 mm^2) per terminal
	Tightening Torque	10.6 +/– 2 lb•in (1.2 +/– 0.2 N•m)
Control Terminals	Wire Size	(2) #18…#10 AWG (0.8…5.2 mm^2) per terminal
	Tightening Torque	10.6 +/– 2 lb•in (1.2 +/– 0.2 N•m)
PE/Ground	Wire Size	(2) #16…#10 AWG (1.3…5.2 mm^2) per terminal
	Tightening Torque	18 +/– 2 lb•in (2 +/– 0.2 N•m)
Source Brake (Bulletin 294)	Wire Size	#16 …#10 AWG (1.0…4.0 mm^2) per terminal
	Tightening Torque	4.8 ± 2 lb•in (0.5 ± 0.2 N•m)

IMPORTANT ArmorStart LT is UL Listed for use with 14 AWG wire or preassemble power cable. Refer to your local electrical code(s) when applying 16 AWG wire or cable in a motor circuit.

Branch Circuit Protection

ATTENTION: Select the motor branch circuit protection that complies with the NFPA79/ or NFPA70 (NEC) and any other governing regional or local codes.

The ArmorStart LT is Underwriters Laboratory (UL) Group Motor listed. Refer to the product Specifications, Chapter 6 for maximum branch fuse and circuit breaker ratings. Select the motor branch circuit protection device that complies with NFPA70 (NEC) or NFPA79, and any other governing regional or local codes. The installer shall observe the product nameplate markings and not apply the ArmorStart LT where the maximum perspective short circuit current is exceeded. The ArmorStart LT shall be applied to a solidly grounded WYE power distribution system that does not exceed 480V AC, 60 Hz or 400V AC, 50 Hz.

WARNING: Do not install the ArmorStart LT where the maximum available fault current exceeds the product rating.

Typical System Example

The primary function of ArmorStart LT is to control and protect a three-phase squirrel cage induction motor. Three-phase power enters through terminals that are connected to a manually operated disconnect switch. The three-phase power may also connect internally to an optional three-phase to 24V DC power supply (IPS). Wired in series with the disconnect is an electrically operated contactor or a variable frequency drive. For Bulletin 294D an optional source brake contactor may also be connected to the disconnect output terminals. The source brake contactor is used to control an electromechanical brake physically attached to the motor. The microcontroller and interface circuits are contained in the ECM. The ECM also houses 6 user configurable I/O points. These six I/O points are used for system level control and are accessible via by the communication network or DeviceLogix.

The user has the flexibility to coordinate the appropriate safety function for their application. ArmorStart LT does not provide a safe torque-off input. Therefore, the safety function is configured externally from the controller and based upon the risk assessment.

For example, the risk assessment may require a safety circuit with a high level of performance. In this example, a safety relay with redundant safety contactors and emergency stop function can be integrated into the machine controls. Figure 17 below is an example of this configuration. Contact your local Rockwell Automation supplier for additional support regarding the safety circuit or for a risk assessment of your machinery.

Figure 17 -

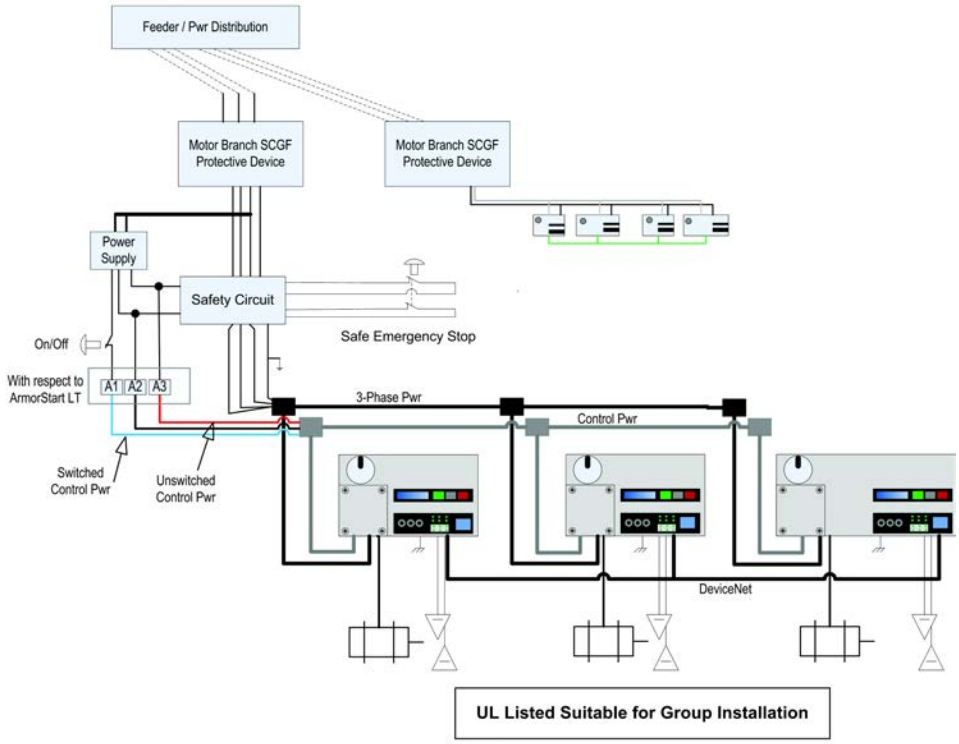

ArmorConnect Power Media

For greater flexibility and faster installations the user may also use ArmorConnect media for a complete plug-n-play solution. This solution provides plug-in style stop stations, as shown in Figure 18. The ArmorConnect power media offers both three-phase and control power cable cord set systems. These include patchcords, receptacles, tees, reducers and accessories to be utilized with the ArmorStart LT Distributed Motor Controller. This cable system allows quick connections and reduced installation time by utilizing pre-manufactured cable assemblies for more reliable connection of the three phase and control power.

IMPORTANT When specifying power media for use with the ArmorStart LT Distributed Motor Controllers (Bulletin 290D/291D and Bulletin 294D) use only ArmorConnect power media. The use of any other power media will void the UL Listing of the motor controller.

Figure 18 - Media Diagram

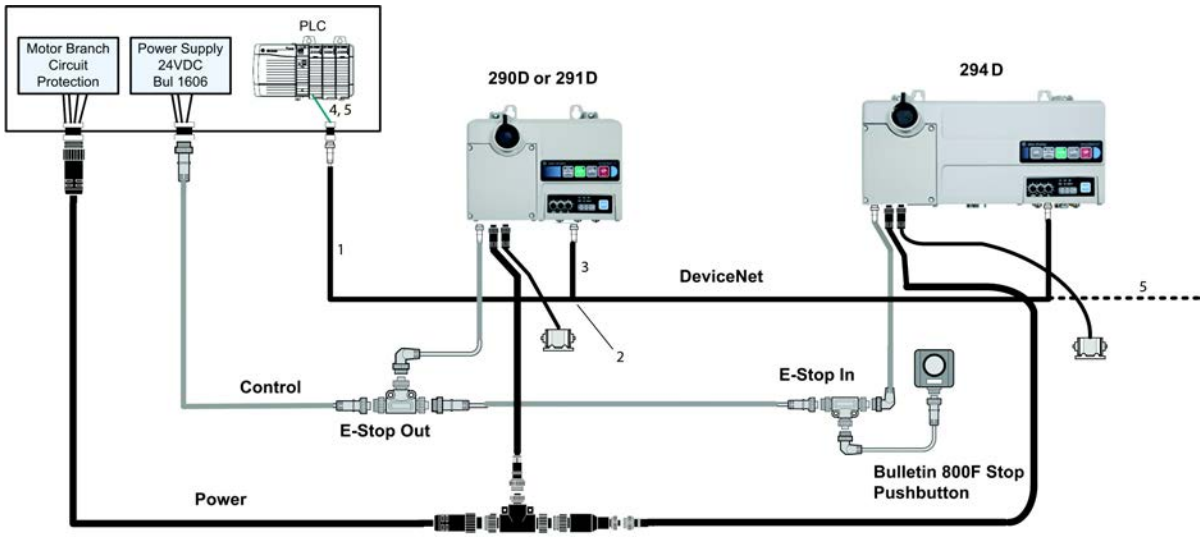

IMPORTANT A single channel Stop is pictured. It is necessary to perform a risk assessment and determine specific application requirements.

1. DeviceNet Trunk Cable - Patchcord trunk cable with integral female or male connector on each end (example 1485C-P*N5-M5)
2. DeviceNet Mini- T-Port Tap - T-ports are used for connecting drops to the trunk line (example 1485P-P1N5-MN5KM)
3. DeviceNet Drop Cable - Drop cables and patch cords are used to connect devices to the network (example 1485G-P*M5-Z5)
4. DeviceNet Receptacle - Recepatcles are used when connections present but required (example 1485A–CXN5–M5)
5. DeviceNet Terminator - Properly designed DeviceNet networks require terminating resistors (example 1485A–T1N5)

IMPORTANT See the On-Machine Connectivity catalog for specific Ethernet media components

Figure 19 - On-Machine Stop Stations

Enclosure Type	Quick Connect	Knockout Type	Operator	Illumination Voltage	Contact Configuration	Cat. No.
Plastic	Mini Receptacle	Metric	Twist to Release	24V AC/DC	1 N.C./1 N.O.	800F-1YMQ4
Metal				24V AC/DC		800F-1MYMQ4

ArmorConnect Cable Ratings

The ArmorConnect Power Media cables are rated per UL Type TC 600V 90°C Dry 75°C Wet, Exposed Run (ER) or MTW 600V 90°C or STOOW 105°C 600V - Canadian Standards Association (CSA) STOOW 600V FT2.
For additional information regarding ArmorConnect Power Media refer to ArmorStart LT selection guide, publication 290-SG001.

Branch Circuit Protection Requirements for ArmorConnect Three-Phase Power Media

When using ArmorConnect Three-Phase Power Media, fuses or circuit breakers may be used for the motor branch circuit ground fault protection if properly sized and allowed by product labeling.

Circuit Breaker:

Where ArmorStart LT is used with ArmorConnect — suitable for use on a circuit capable of delivering not more than 10 000 RMS Symmetrical Amperes at 480Y/277V AC maximum when protected by Cat. No. 140U-D6D3-C30 circuit breaker, refer to the Specifications, Chapter 6.

WARNING: The total circuit impedance including each cable assembly's own impedance, must be low enough to ensure any short-circuit or ground fault current that can flow through any assembly, will be large enough to operate the magnetic trip of the Cat. No. 140U-D63-C circuit breaker. Refer to NFPA 70 and NFPA 79 or your local electrical code for guidance in coordinating over current protective devices and the circuit being protected.

Fusing:

Where ArmorStart LT is used with ArmorConnect — suitable for use on a circuit capable of delivering not more than 10 000 RMS Symmetrical Amperes (SCCR) at 480/277V AC maximum when protected by 40 A CC, J, and T class fuses, refer to the Specifications, Chapter 6.

Electrical Wiring

ArmorStart LT EtherNet/IP utilizes 24V DC control power for communications and I/O. The control power terminal connections are labeled A1, A2, and A3. Switched power (A1) will supply outputs and motor control. Unswitched power (A3) will supply logic power, communications, and sensor inputs.

IMPORTANT EtherNet/IP is an unpowered network, therefore if device status is important, the A3 terminal must have an unswitched power source.

Figure 20 - Bulletin 290D Full Voltage

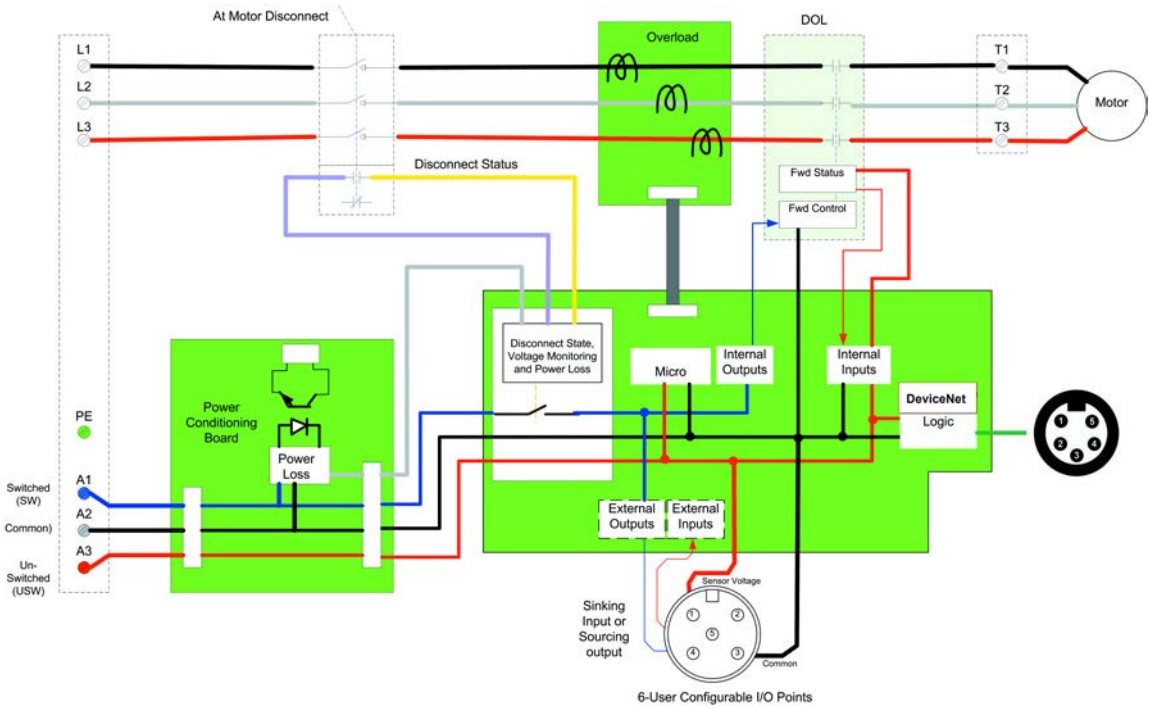

Figure 21 - Bulletin 291D Full Voltage Reversing

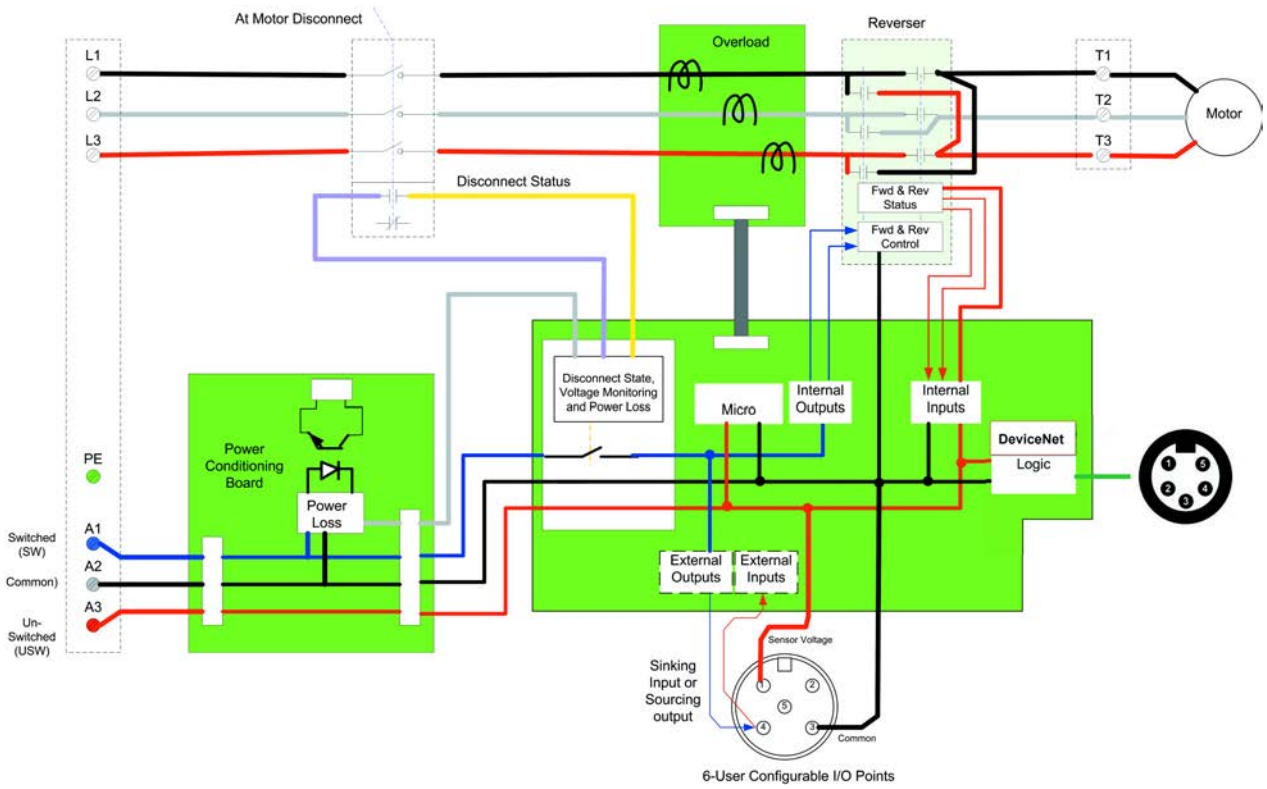

Figure 22 - Bulletin 294D VFD

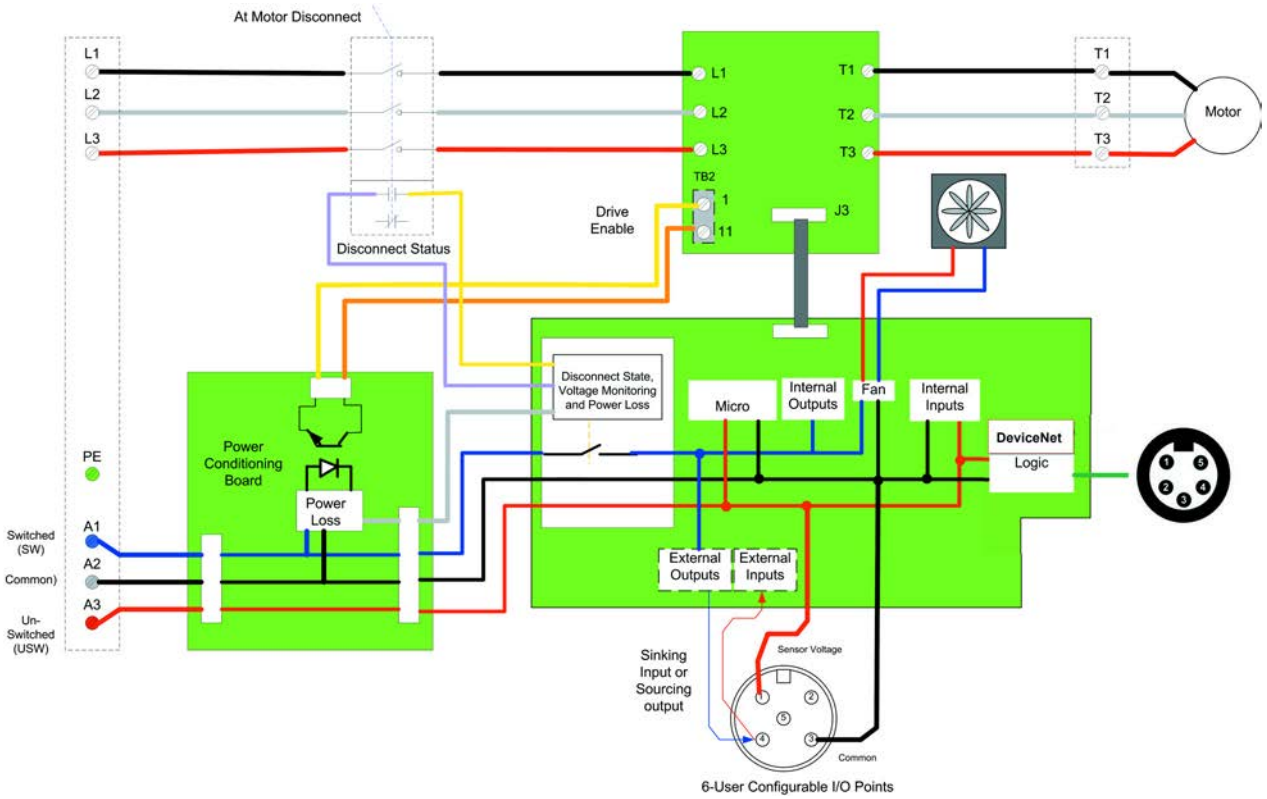

Figure 23 - Bulletin 294D VFD with -SB

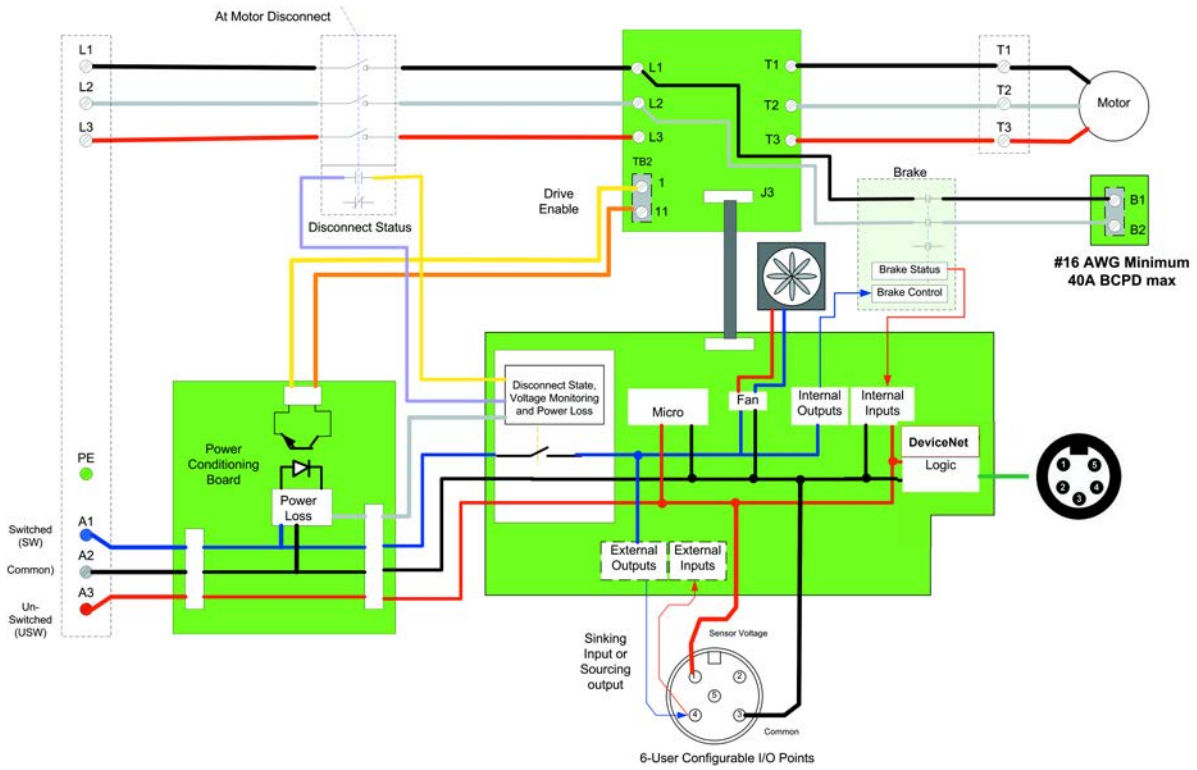

Figure 24 - Bulletin 290D Full Voltage with -IPS

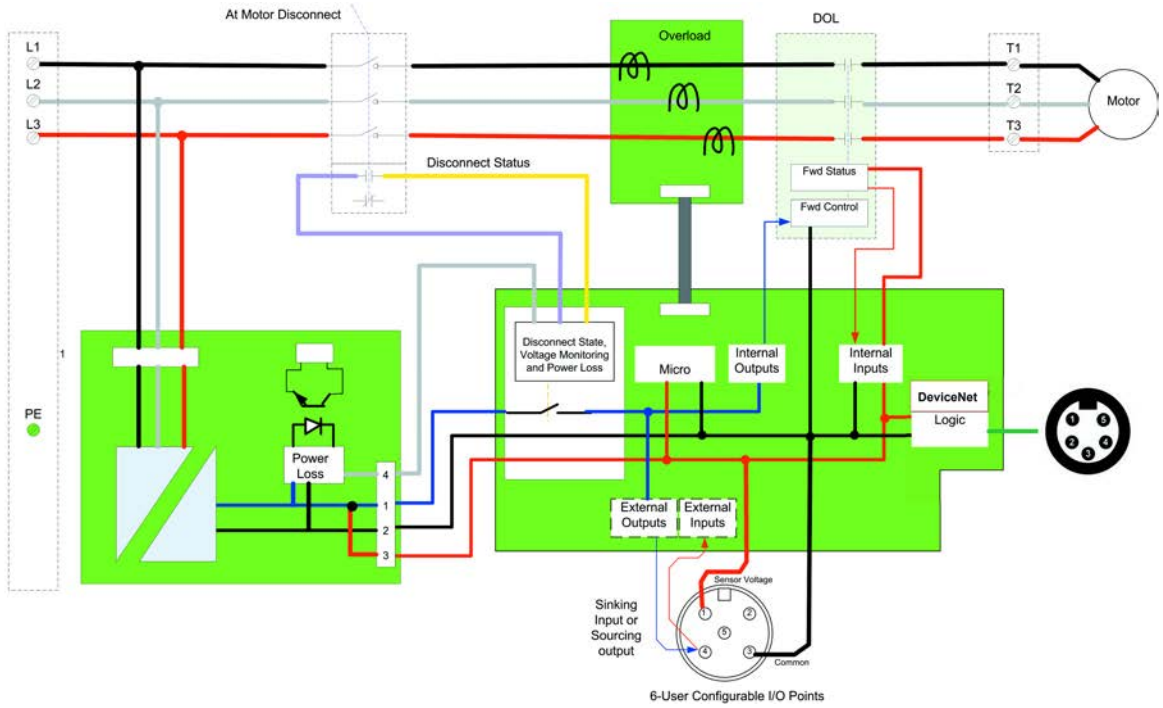

Figure 25 - Bulletin 291D Full Voltage Reversing with -IPS

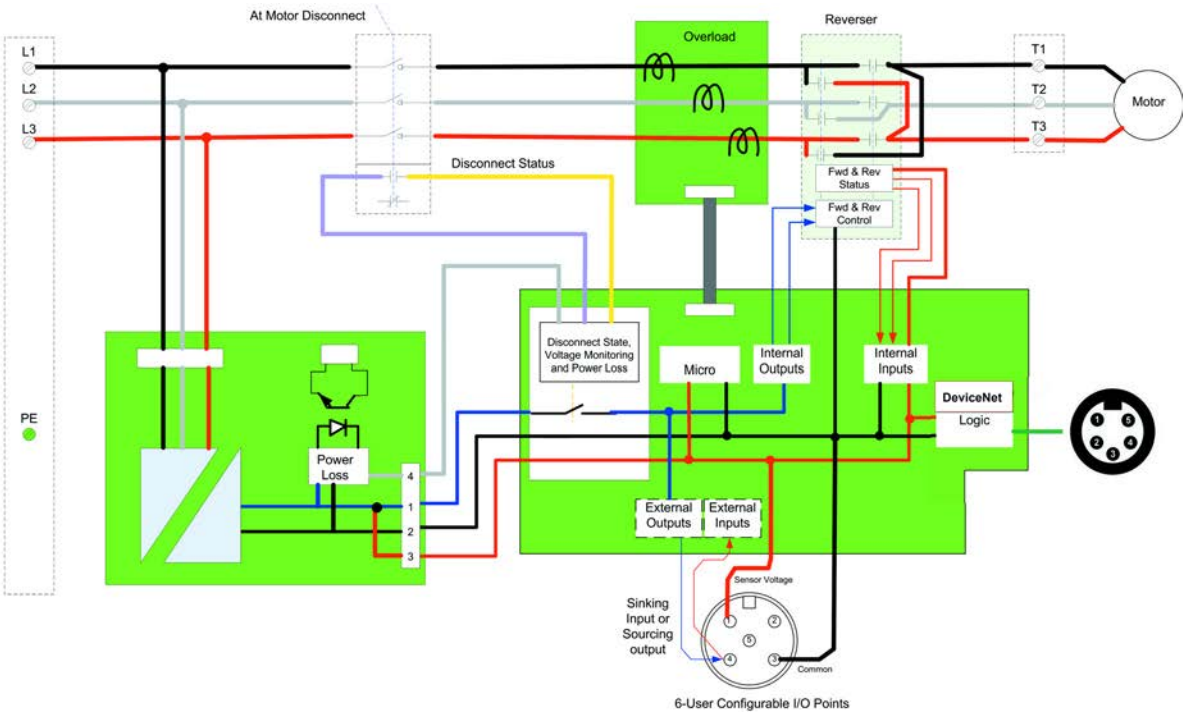

Figure 26 - Bulletin 294D VFD with -IPS

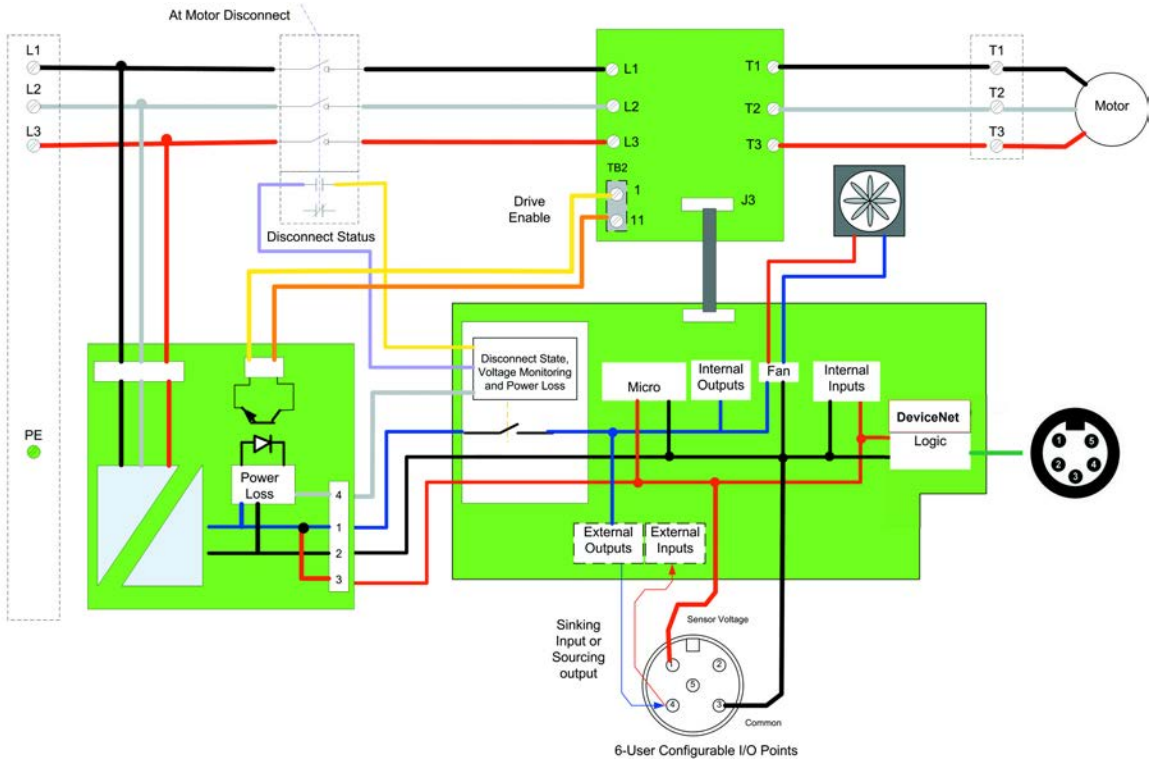

Figure 27 - Bulletin 294D VFD with -IPS, -SB

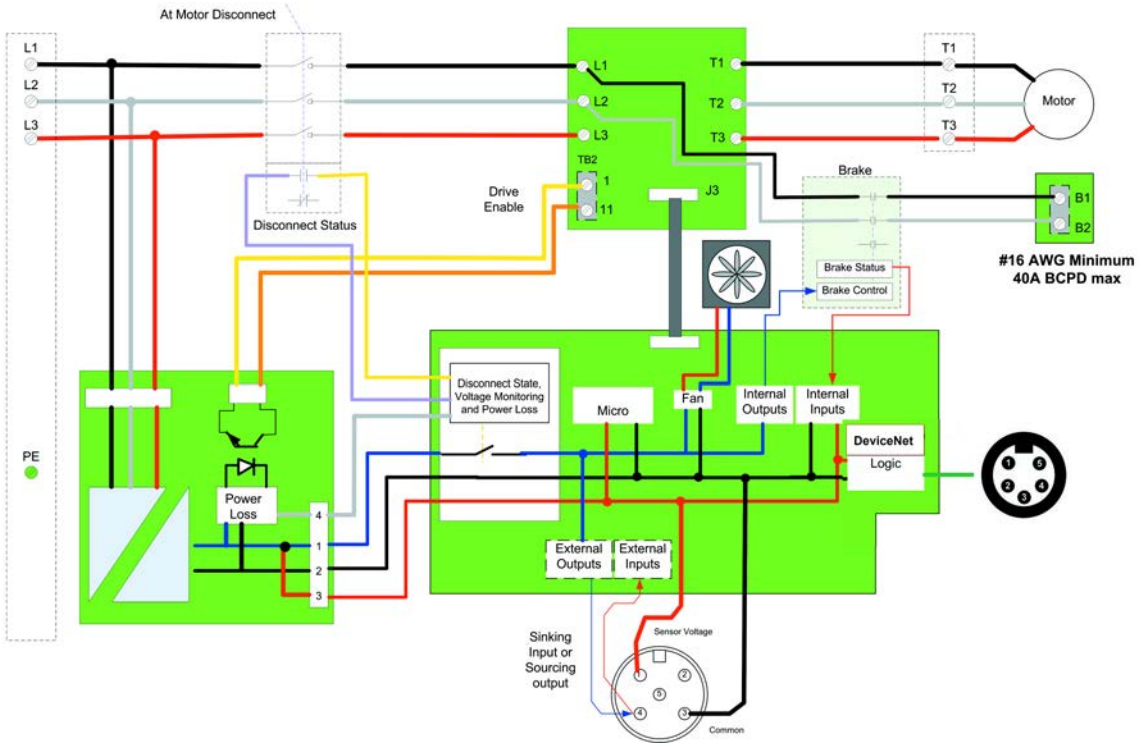

Group Motor Installations for USA and Canada Markets

When ArmorStart LT is applied according to group motor installation requirements, two or more motors of any rating or controller type, are permitted on a single branch circuit. Group Motor Installation has been successfully used for many years in the USA and Canada.

IMPORTANT For additional information regarding group motor installations with the ArmorStart LT Distributed Motor Controller, see Appendix A

Wiring

Cable Workmanship Guidelines

In addition to conduit and seal-tite raceway, it is acceptable to utilize cable that is dual rated Tray Cable Exposed Runs (TC-ER) and Cord, STOOW, for power and control wiring on ArmorStart LT installations. In the USA and Canada installations, the following guidance is outlined by the National Electrical Code (NEC) and National Fire Protection Association (NFPA) 79.

In industrial establishments where the conditions of maintenance and supervision ensure that only qualified persons service the installation, and where the exposed cable is continuously supported and protected against physical damage using mechanical protection, such as struts, angles, or channels, Type TC tray cable that complies with the crush and impact requirements of Type MC (Metal Clad) cable and is identified for such use with the marking Type TC-ER (Exposed Run)❶ shall be permitted between a cable tray and the utilization equipment or device as open wiring. The cable shall be secured at intervals not exceeding 6 ft (1.8 m) and installed in a "good workman-like" manner. Equipment grounding for the utilization equipment shall be provided by an equipment grounding conductor within the cable.

While the ArmorStart LT is intended for installation in factory floor environments of industrial establishments, the following must be taken into consideration when locating the ArmorStart LT in the application:

- Cables, including those for control voltage including 24V DC and communications, are not to be exposed to an operator or building traffic on a continuous basis.
- Location of the ArmorStart LT to minimize exposure to continual traffic is recommended. If location to minimize traffic flow is unavoidable, other barriers to minimize inadvertent exposure to the cabling should be considered.
- Routing cables should be done in such a manner to minimize inadvertent exposure and/or damage.
- If conduit or other raceways are not used, it is recommended that strain relief fittings be utilized when installing the cables for the control and power wiring through the conduit openings.

❶ Historically cable meeting these crush and impact requirements was designated and marked "Open Wiring." Cable so marked is equivalent to the present Type TC-ER and can be used.

Service Space

The working space around the ArmorStart LT can be minimized as the ArmorStart LT does not require examination, adjustment, servicing or maintenance while energized. In lieu of this service, the ArmorStart LT is meant to be unplugged and replaced after proper lock-out/tag-out procedures have been employed.

Hand Operation (HOA) Considerations

The Hand/Off/Auto (HOA) is a factory-installed option that the user may select. The HOA keypad may require the ArmorStart LT to be installed as follows, if the application requires frequent use of the hand operated interface by the equipment operator:

1. Install not less than 2 ft (0.6 m) above the servicing level and within easy reach of the operator, who is in a normal working position.
2. Install where the operator is not placed in a hazardous situation when operating the equipment.
3. Install where the possibility of inadvertent operation is minimized.

Where inadvertent operation may cause adverse effects the HOA can be disabled via parameter 67.

General Wiring Considerations

Wire in an industrial control application can be divided into three groups: power, control, and signal. The following recommendations for physical separation between these groups is provided to reduce the coupling effect:

- Minimum spacing between different wire groups in the same tray should be 6 in. (16 cm).
- Wire runs outside an enclosure should be run in conduit or have shielding/armor with equivalent attenuation.
- Different wire groups should be run in separate conduits.
- Minimum spacing between conduits containing different wire groups should be 3 in. (8 cm).
- Minimum spacing between 3-phase power cabling and DeviceNet or I/O cabling should be at least 6 in. (16 cm) to avoid noise issues, unless properly shielded.

Grounding

An effectively grounded product is one that is "intentionally connected to earth through a ground connection or connections of sufficiently low impedance and having sufficient current-carrying capacity to prevent the buildup of voltages which may result in undue hazard to connected equipment or to persons" (as defined by the US National Electric Code NFPA70, Article 100B). Grounding is done for two basic reasons: safety (defined above) and noise containment or reduction. While the safety ground scheme and the noise current return circuit may sometimes share the same path and components, they should be considered different circuits with different requirements.

Grounding Safety Grounds

The object of safety grounding is to ensure that all metalwork is at the same ground (or Earth) potential at power frequencies. Impedance between the drive and the building scheme ground must conform to the requirements of national and local industrial safety regulations or electrical codes. These will vary based on country, type of distribution system and other factors. Periodically check the integrity of all ground connections.

General safety dictates that all metal parts are connected to earth with separate copper wire or wires of the appropriate gauge. Most equipment has specific provisions to connect a safety ground or PE (protective earth) directly to it.

Grounding PE or Ground

The safety ground - PE must be connected to earth ground. This point must be connected to an adjacent building steel (girder, joist), a floor ground rod, a bus bar or a building ground grid. Grounding points must comply with national and local industrial safety regulations or electrical codes. Some codes may require redundant ground paths and periodic examination of connection integrity.

IMPORTANT To avoid electrolytic corrosion on the external earth terminal, avoid spraying moisture directly on the terminal. When used in washdown environments apply a sealant or other corrosion inhibitor on the external ground terminal to minimize any negative effects of galvanic or electro-chemical corrosion. Ground connections should be inspected on a regular basis.

Grounding Motors

The motor frame or stator core must be connected directly to the PE connection with a separate ground conductor. It is recommended that each motor frame be grounded to building steel at the motor.

Power Distribution

The type of transformer and the connection configuration feeding an ArmorStart LT Bulletin 294D plays an important role in its performance and safety.

Delta/Wye with Grounded Wye Neutral

Figure 28 -

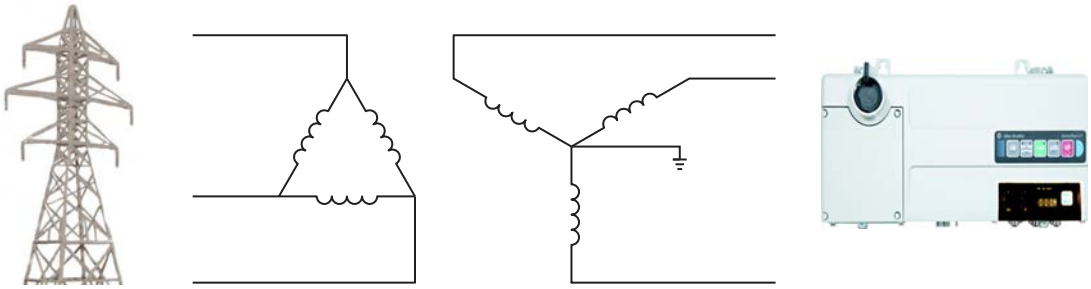

Delta/Wye with Grounded Wye Neutral is the most common type of distribution system. The grounded neutral provides a direct path for common mode current caused by the drive output.

SHOCK HAZARD: ArmorStart LT requires the use of grounded Wye power systems.

AC Line Voltage

Incoming voltage imbalances greater than 2% can cause large unequal currents in a drive. An input line reactor may be necessary when line voltage imbalances are greater than 2%.

Line Reactor

In general, ArmorStart LT does not require line reactors. In most applications, the ArmorStart LT is further away from the power distribution panel, therefore the length of cable provides additional impedance as compared to an in-panel solution.

Through design and engineering, the need for a line reactor is significantly reduced.

Therefore, ArmorStart LT does not define a minimum line impedance specification, and does not require a line reactor. Its design trades the external reactor supplied by the customer for an internal fan integral to the controller. This improves the overall life of the product. To achieve maximum electrical life of Bulletin 294, an 800µH line reactor for the group can be applied to extend total service life.

In addition, if line disturbance mitigation is also necessary, the ArmorStart LT is equipped with an EMI filter and when used with a shielded motor cable reduces the impact of the power switching components. For CE compliant installations refer to the recommended EMI/RFI cord grip accessory or quick disconnect shielded motor cable. Contact your local sales representative for details.

If however, the customer specifications require input line reactors or transformers, the recommendation is to group the ArmorStarts at the distribution panel under one line reactor (not individual reactors or transformers). Keep in mind where full voltage ArmorStarts are included with VFD ArmorStarts, the starting currents of the full voltage ArmorStarts can be significant. The current must be accounted for in the selection of the line reactor or you run the risk of nuisance undervoltage faults of the VFD ArmorStarts while the full voltage ArmorStarts are starting their motors.

ATTENTION: For 50°C ambients ArmorStart LT must be derated and applied with a minimum of 800 uH to1200 uH line reactor. Failure to follow this application requirement will result in premature product failure. Contact your local Rockwell Automation representative for assistance.

Bulletin 294D Motor Cable Considerations

The majority of recommendations regarding drive cable address issues are caused by the nature of the drive output. A PWM drive creates AC motor current by sending DC voltage pulses to the motor in a specific pattern. These pulses affect the wire insulation and can be a source of electrical noise. The rise time, amplitude, and frequency of these pulses must be considered when choosing a wire/cable type. The choice of cable must consider:

1. The effects of the drive output once the cable is installed
2. The need for the cable to contain noise caused by the drive output
3. The amount of cable charging current available from the drive
4. Possible voltage drop (and subsequent loss of torque) for long wire runs

Keep the motor cable lengths less than 45 ft from the ArmorStart LT.

Unshielded Cable

Properly designed multi-conductor cable can provide superior performance in wet applications, significantly reduce voltage stress on wire insulation and reduce cross coupling between drives.

The use of cables without shielding is generally acceptable for installations where electrical noise created by the drive does not interfere with the operation of other devices such as: communications cards, photoelectric switches, weigh scales, and others. Be certain the installation does not require shielded cable

to meet specific EMC standards for CE, C-Tick or FCC. Cable specifications depend on the installation type.

Figure 29 - Unshielded Multi-Conductor Cable

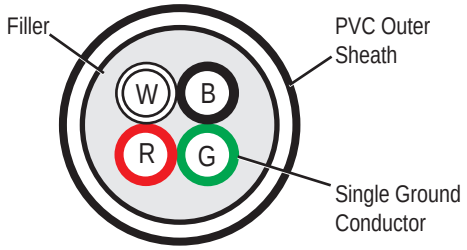

Shielded Cable

Shielded cable contains all of the general benefits of multi-conductor cable with the added benefit of a copper braided shield that can contain much of the noise generated by a typical AC Drive. Strong consideration for shielded cable should be given for installations with sensitive equipment such as weigh scales, capacitive proximity switches, and other devices that may be affected by electrical noise in the distribution system. Applications with large numbers of drives in a similar location, imposed EMC regulations, or a high degree of communications/networking are also good candidates for shielded cable.

An acceptable shielded cable will have 4 XLPE insulated conductors with a 100% coverage foil and an 85% coverage copper braided shield (with drain wire) surrounded by a PVC jacket.

Figure 30 - Shielded Cable with Four Conductors

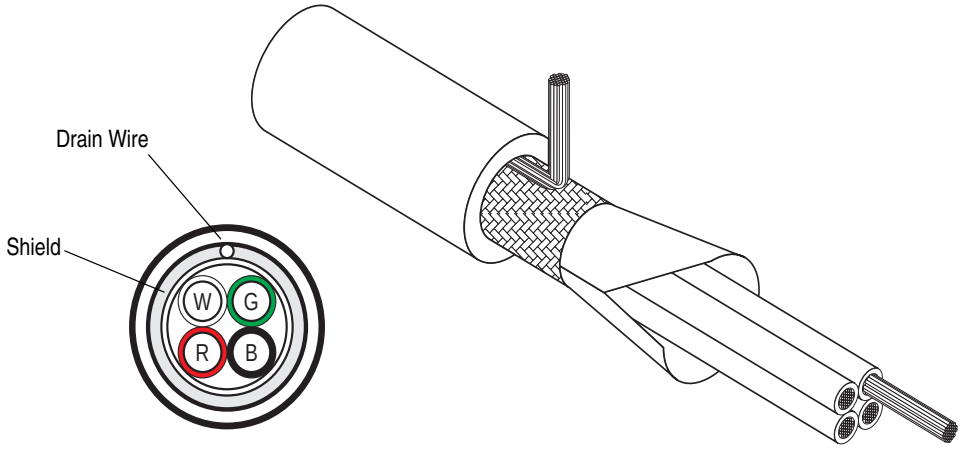

Recommended Cable Connectors/Glands

Choose cable connectors or glands that offer the best cable protection, shield termination, and ground contact.

Recommended Cord Grips

The following are recommended cord grips to be used for ArmorStart LT installations.

Table 9 - Cord grip for Motor, Power, and Control Recommended Thomas and Betts Cord Grips for G1 and G3 Glands.

Description	Gland	Knockout Size	Cable Diameter Range (in.^{2})	Thomas and Betts Part Nos.		
				Cord Grip	Sealing Ring	Lock Nut
Motor/Source Brake	G1	0.75 in.	0.500…0.750	2932NM	5263	142TB
Motor/Source Brake	G1	0.75 in.	0.660…0.780	2675	5263	142TB
Power	G1	1.0 in.	0.660…0.780	2676	5264	143
Power	G1	1.0 in.	0.770…0.895	2677	5264	143
Control Power, Motor/Source Brake	G3	M20	0.236…0.473	CC-ISO20-G	–	GMN-M20
3-Phase Power	G3	M25	0.512…0.709	CC-ISO25-G	–	GMN-M25

Shield Terminating Connectors

The cable connector selected must provide good 360° contact and low transfer impedance from the shield or armor of the cable to the conduit entry plate at both the motor and the ArmorStart LT for electrical bonding. SKINTOP® MS-SC/MS-SCL cable grounding connectors and NPT/PG adapters from LAPPUSA are good examples of this type of shield terminating gland.

Figure 31 - Terminating the Shield with a Connector

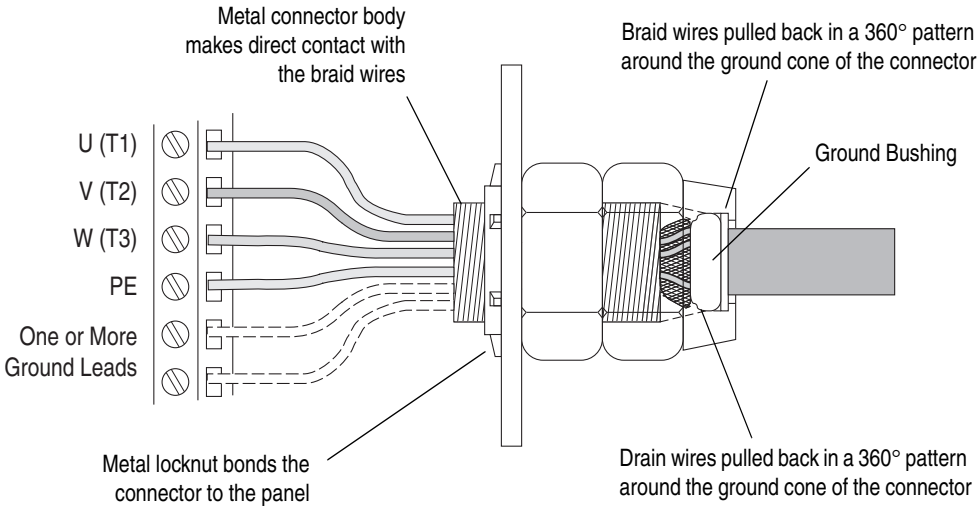

ATTENTION: Shielded connector or motor cable is mandatory for CE compliant installations.

Electromagnetic Compatibility (EMC)

The following guidelines are provided for EMC installation compliance.

General Notes (Bulletin 294D only)

- The motor cable should be kept as short as possible in order to avoid electromagnetic emissions as well as capacitive currents. CE conformity of ArmorStart LT with EMC directive does not guarantee the entire machine installation complies with CE EMC requirements. Many factors can influence total machine/installation compliance.
- The EMI filter may result in relatively high ground leakage currents. Therefore, ArmorStart LT must only be applied in installations that are solidly grounded (bonded) to the building power distribution ground.

ATTENTION: RFI Filter Grounding. Due to the presence of an integral EMI filter, this product may draw more that 3.5 mA of leakage current. The controller must only be used in installations with grounded AC supply systems and be permanently installed and solidly grounded (bonded) to the building power distribution ground. Grounding should not include any form of plug or socket that would permit inadvertent disconnection. Consult your local codes regarding redundant ground connections and/or size of protective earthing conductor. The integrity of all connections should be periodically checked.

Ethernet, DeviceNet, and I/O Connections

DeviceNet Connector (M18)

Pin 1 – Drain (no connection)
Pin 2 – +VDNET
Pin 3 – -VDNET
Pin 4 – CAN_H
Pin 5– CAN_L

Ethernet/IP Connector D-coded (M12)

M12 Female Ethernet Connector
Pin 1 – Tx+
Pin 2 – Rx+
Pin 3 – Tx–
Pin 4 – Rx–

I/O Connector (M12)

Pin 1 – Sensor Source Voltage
Pin 2 – Not Used
Pin 3 – Common
Pin 4 – Input or Output
Pin 5 – Not Used

ArmorConnect Power Media Receptacles

ArmorStart LT utilizes a M22 male receptacle for power inputs and a M22 female receptacle for motor or motor brake output.

Motor Connector (optional)

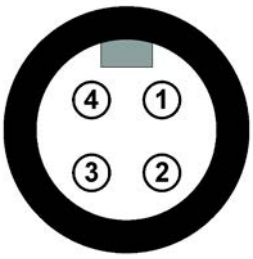

Pin 1 - T1 (black)
Pin 2 - T2 (white)
Pin 3 - T3 (red)
Pin 4 - Ground (green/yellow)

Source Brake Connector (optional)

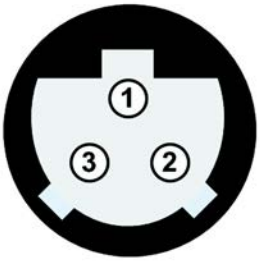

Pin 1 - Ground (green/yellow)
Pin 2 - B1(black)
Pin 3 -B2 (white)

Incoming Control Power (optional) – 24V DC Only

Pin 1 – (+V) Unswitched (A3/red)
Pin 2 – (–V) Common (A2/black)
Pin 3 – Not used (green)
Pin 4 – Not used (blank)
Pin 5 – (+V) Switched (A1/blue)
Pin 6 – Not used (white)

Incoming Three-Phase Power (optional)

Pin 1 - L1 (black)
Pin 2 - L2 (white)
Pin 3 - L3 (red)
Pin 4 - Ground (green/yellow)

Optional Locking Clip

The locking clip is an optional device that can be used, if desired. The clam shell design clips over power quick disconnect connections to limit customer access to disconnection.

Figure 32 -

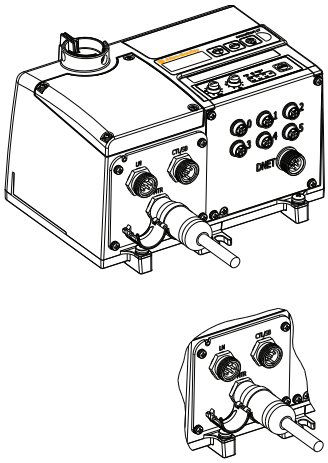

SHOCK HAZARD: DO NOT connect or disconnect power or motor connections while power is applied to ArmorStart LT. Proper Lock-Out Tag-Out procedures should be followed to reduced the risk of severe injury.

SHOCK HAZARD: The ArmorStart LT local disconnect will only isolate the motor power and remove switched power when turned OFF. Power inputs must be switched OFF properly from their respective sources before connection or disconnection of incoming power. Proper Lock-Out Tag-Out procedures should be followed to reduced the risk of severe injury.

Notes:

Product Commissioning

Configuring DeviceNet Address

The ArmorStart® is shipped with a default switch setting of 99 and Autobaud enabled. When a value greater than 63 is read, then the node address will be set to the value stored in memory. From the factory the node address will be set to 63.

The Each device on a DeviceNet network must have a unique node address which can be set to a value from 0 to 63. Keep in mind that most DeviceNet systems use address 0 for the master device (Scanner) and node address 63 should be left vacant for introduction of new slave devices. The ArmorStart offers two methods for node commissioning .The node address for a device can be changed using software or by setting hardware switches that reside on electronic control module (ECM). While both methods yield the same result, it is good practice to choose one method and deploy it throughout the system. For software configuration ensure that the node address is set to 99 and use RS Networx node commissioning wizard.

Manually Configure the Network Address Switches

Remove the protective caps from the rotary switches.

Figure 33 - Switches on the I/O module

Set the network address by adjusting the two rotary switches on the front of the ECM.

Figure 34 - Network Address Example

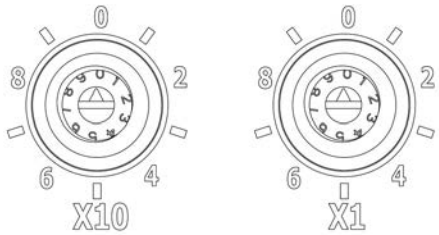

This example shows the node address set to 00.

The switch value of 88 allows the user to reset to factory default configuration including configuration parameters. This setting is useful in situations where the user wishes to decommission a module or when the user wishes to commission a previously-used module that has an unknown configuration. When the switches are set to 888, upon the next power cycle the ArmorStart LT will return to factory default settings and cease all communications. The Module Status LED shall transition to blinking red and the Network Status LED shall transition to off.

After reset, the user will then need to change the IP address to a valid setting and power cycle. The purpose of this is to prevent the user from resetting the module and then never changing the switch setting from 88.

IMPORTANT Setting the node address to "88" followed by a power cycle will reset the device to its factory default configuration. To resume network communication the address **MUST** be set to a valid address and power cycled again.

DeviceNet™ Commissioning

Establishing a DeviceNet Node Address

The ArmorStart® LT is shipped with a default node address of 63 and Autobaud enabled. Each device on a DeviceNet network must have a unique node address or MAC ID which can be set to a value from 0 to 63. Keep in mind that most DeviceNet systems use address 0 for the master device (Scanner) and node address 63 should be left vacant for introduction of new slave devices. The ArmorStart offers two methods for node commissioning as shown below.

The node address for a device can be changed using software or by setting hardware switches that reside on the back of the control module. While both methods yield the same result, it is good practice to choose one method and deploy it throughout the system.

Node Commissioning using Hardware

The ArmorStart is shipped with the hardware rotary switches set to a value of (99). If the switches are set to a value (64) or above, the device will automatically configure itself to the software node address. If the switches are set to a value of (63) or less, the device will be at the node address designated by the switch configuration.

To set an address using the hardware rotary switches, simply set the switches to the desired node address and cycle power to the unit. The Device will re-start at the new address.

Node Commissioning using Software

To set the node address of the ArmorStart using software or other handheld tools, leave the hardware switches in there default position (99) or insure that they are set to something greater than (63). With the hardware switches set, use the software or handheld tool to change the address.

To begin the configuration of ArmorStart using software, execute the RSNetWorx™ software and complete the following procedure. You must use RSNetWorx Revision 11 or later.

1. Go on-line using RSNetWorx for DeviceNet. This can be accomplished by selecting the ***Network*** menu, and then choosing ***RSWho***.

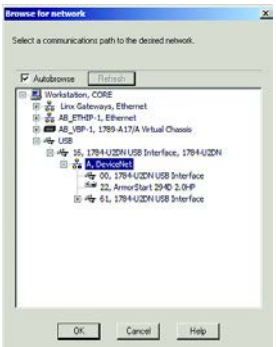

2. Choose the appropriate DeviceNet PC interface.

   Note: DeviceNet drivers must be configured using RSLinx prior to being available to RSNetWorx.

3. Click ***OK***.

4. RSNetWorx will notify the user to upload or download devices before viewing configuration. Click ***OK***.

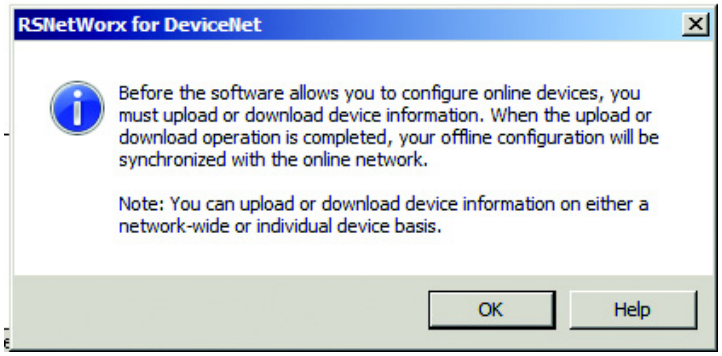

5. RSNetWorx will now browse the network and display all of the nodes it has detected on the network. For some versions of RSNetWorx software the ArmorStart EDS files and icon may not be included and will show up as an "Unregistered Device". Refer to Registering an EDS file for details.

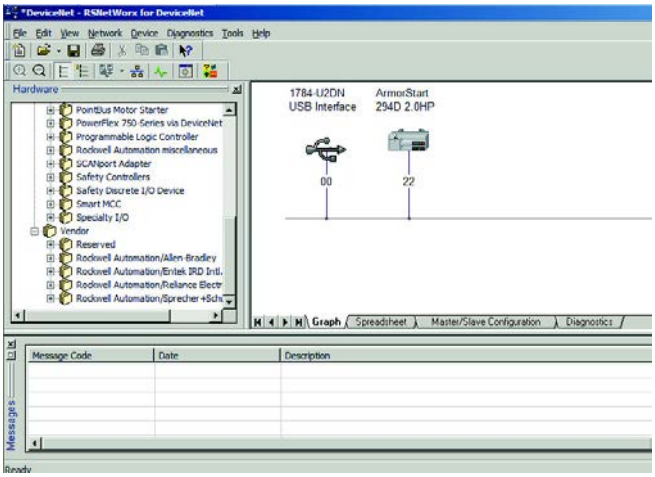

6. If RSNetWorx recognizes the device as an ArmorStart LT, skip ahead to the following section Changing the Node address (MAC ID)

Registering an EDS file

The EDS file defines how RSNetWorx for DeviceNet will communicate to the ArmorStart. Follow the steps below to build and register the EDS file.

To register a device you must first obtain the EDS file from the following web page: ***http://www.ab.com/networks/eds***

You are also able to upload the eds directly from the product if online.

After obtaining the files do the following:

1. Right mouse click on the "Unrecognized Device" icon and choose ***Register Device*** from the menu.
2. Click ***Next***. The following screen appears:

3. Choose "Register an EDS file(s)" as shown above and then click the ***Next*** button.
4. Choose to "Register a single file" or "Register a directory of EDS files" and specify the file name or location using the ***Browse*** button to locate the EDS file on your computer.

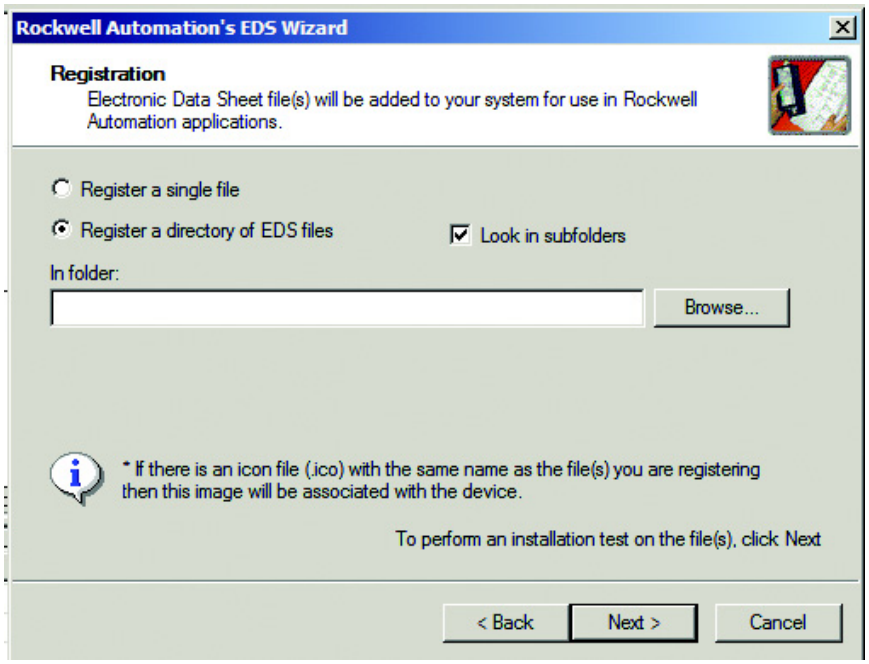

5. Click the ***Next*** button.
6. The following screen will display any warning or errors if a problem occurs while registering the file. If a problem occurs insure that you have the correct file and try again. Click the ***Next*** button when no errors occur.

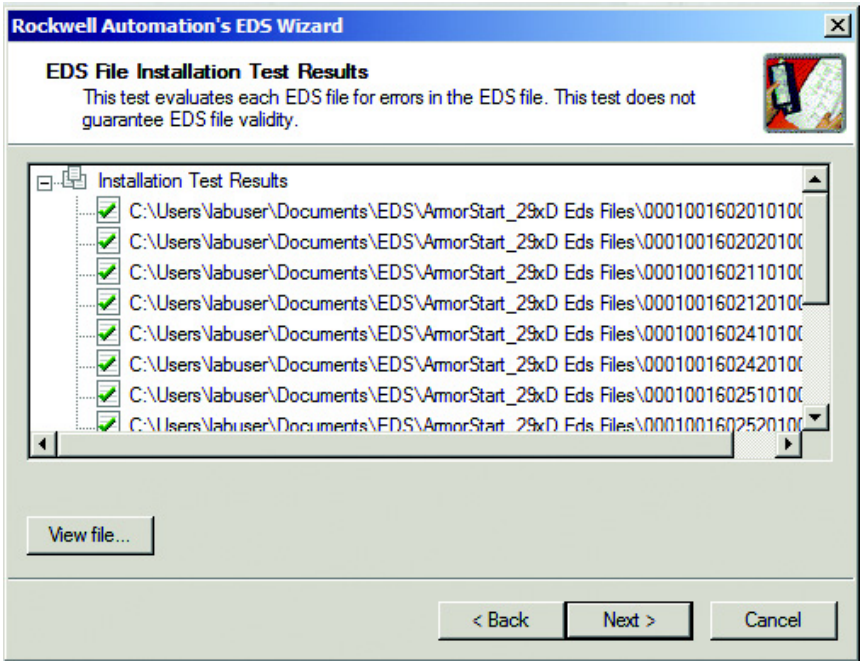

7. Click the ***Next*** button

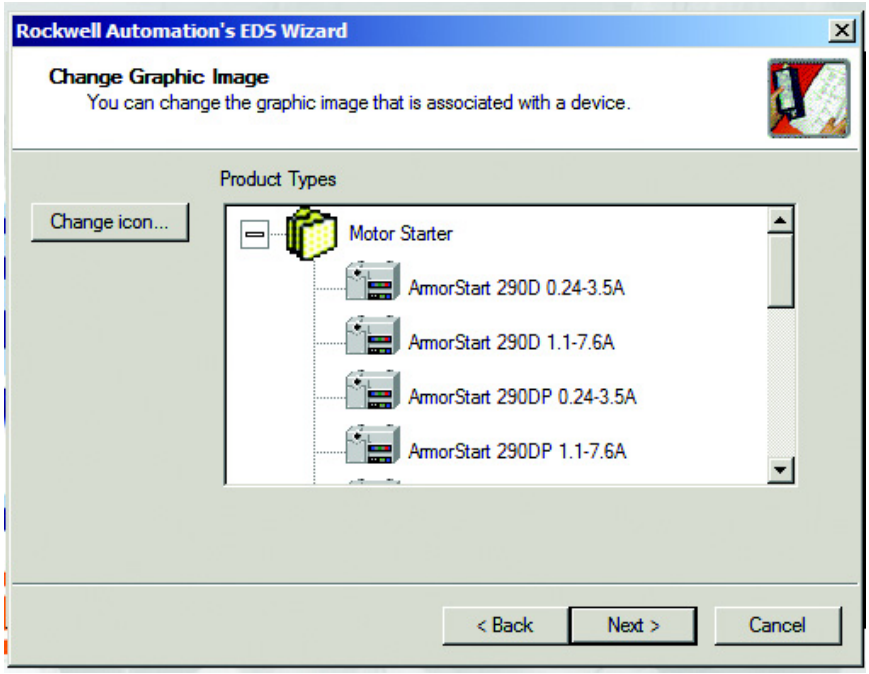

8. Click the ***Finish*** button. After a short while RSNetWorx will update your online screen by replacing the unrecognized device with the name and icon given by the EDS file you have just registered.

Using the Node Commissioning Tool Inside RSNetWorx for DeviceNet

1. Choose "***Node Commissioning***" from the "**Tools**" menu at the top of the screen.
2. Clicking on ***Browse...*** will prompt a screen similar to the one below to appear.

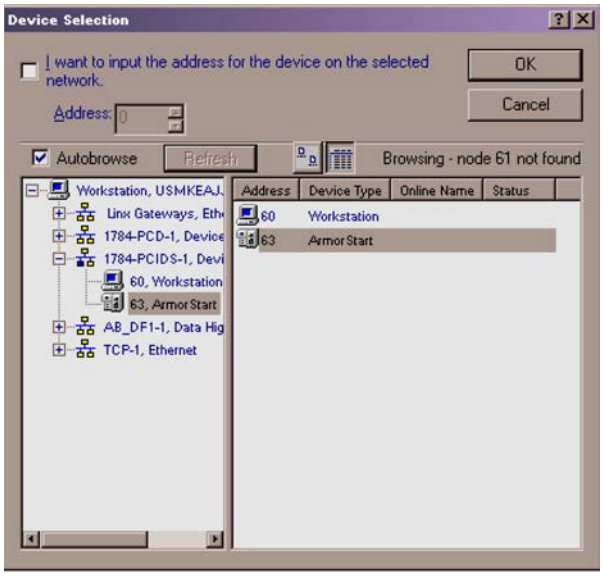

3. Select the ArmorStart located at node 63, and then click ***OK***. The node commissioning screen will have the "Current Device Settings" entries completed. It will also provide the current network baud rate in the "New ArmorStart Settings" area. Do not change the baud rate unless you absolutely sure that this value needs to be changed.
4. Enter the desired node address in the "New Device Settings" section. In this example, the new node address is **5**. Click ***Apply*** to apply the new node address.
5. When the new node address has been successfully applied, the "Current Device Settings" section of the window is updated as follows. If an error occurs, check to make sure the device is properly powered up and connected to the network.

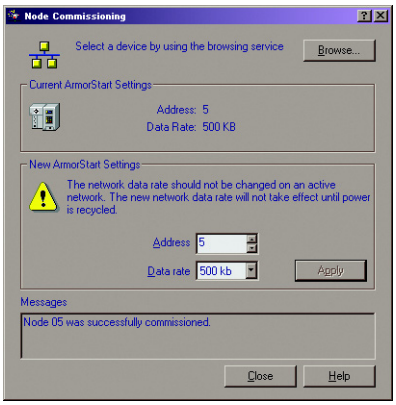

6. Click ***Close*** to exit the node commissioning tool.
7. Choose "**Single Pass Browse**" from the "**Network**" menu to update RSNetWorx and verify that the node address is set correctly.

System Configuration

Selection of produced and consumed I/O assemblies (sometimes referred to as input and output assemblies) define the format of I/O message data that is exchanged between the ArmorStart and other devices on the network. The consumed information is generally used to command the state of its outputs, and produced information typically contains the state of the inputs and the current fault status of the device.

The default consumed and produced assemblies are shown below; for additional formats refer to Appendix B. The ArmorStart default configuration varies depending on the type of starter.

Choosing the size and format of the I/O data that is exchanged by the ArmorStart is done by choosing a consumed assembly instance number. This instance number is written to the *Consumed IO Assy* parameter. The different instances/formats allow user programming flexibility and network optimization.

IMPORTANT The *Consumed and Produced IO Assy* parameter values can not be changed while the ArmorStart is online with a scanner. Any attempts to change the value of this parameter while online with a scanner will result in the error message "Object State Conflict".

Table 10 - Default Consume Assembly for Bulletin 294D

Instance 154 "Drive Cmd" – Default Consumed Assembly for 294 Starters								
Byte	Bit 7	Bit 6	Bit 5	Bit 4	Bit 3	Bit 2	Bit 1	Bit 0
0				JogReverse	JogForward	ResetFault	RunReverse	**RunForward**
1	Decel2	Accel2	**Out05**	**Out04**	**Out03**	**Out02**	**Out01**	**Out00**
2	**CommandFreq (Low) (xxx.x Hz)**							
3	**CommandFreq (High) (xxx.x Hz)**							
4	Pt07DeviceIn	Pt06DeviceIn	Pt05DeviceIn	Pt04DeviceIn	Pt03DeviceIn	Pt02DeviceIn	Pt01DeviceIn	Pt00DeviceIn
5	Pt15DeviceIn	Pt14DeviceIn	Pt13DeviceIn	Pt12DeviceIn	Pt11DeviceIn	Pt10DeviceIn	Pt09DeviceIn	Pt08DeviceIn
6	AnalogDeviceIn (low byte)							
7	AnalogDeviceIn (high byte)							

Table 11 - Default Compact Produce Assembly for Bulletin 294D

Instance 155 "Compact Status" - Compact Produced Assembly for 294D Starters								
Byte	Bit 7	Bit 6	Bit 5	Bit 4	Bit 3	Bit 2	Bit 1	Bit 0
0	AtReference	NetRefStatus	NetControlStatus	Ready	RunningReverse	RunningForward	WarningPresent	TripPresent
1	BrakeStatus	DisconnectClosed		KeyPadJogging	KeyPadHand	KeyPadOff	KeyPadAuto	DLXEnabled
2	OutputFrequency (Low) (xxx.x Hz)							
3	OutputFrequency (High) (xxx.x Hz)							
4			Pt05	Pt04	Pt03	Pt02	Pt01	Pt00
5								
6	Pt07DeviceOut	Pt06DeviceOut	Pt05DeviceOut	Pt04DeviceOut	Pt03DeviceOut	Pt02DeviceOut	Pt001DeviceOut	Pt00DeviceOut
7	Pt15DeviceOut	Pt14DeviceOut	Pt13DeviceOut	Pt12DeviceOut	Pt11DeviceOut	Pt10DeviceOut	Pt09DeviceOut	Pt08DeviceOut

Table 12 - Bulletin 294D Produced Assembly Status Tags

Table 13 - Bulletin 294D Consume Assembly/Command Tag Explanation

Device Output Command Tags	Tag Description/Use
RunForward	Command VFD forward
RunReverse	Command VFD reverse
ResetFault	Fault reset
JogForward	Command Jog forward per internal frequency
JogReverse	Command Jog reverse per internal frequency
Pt00Data	If user defined as output, commnd output ON
Pt01Data	If user defined as output, commnd output ON
Pt02Data	If user defined as output, commnd output ON
Pt03Data	If user defined as output, commnd output ON
Pt04Data	If user defined as output, commnd output ON
Pt05Data	If user defined as output, commnd output ON
Accel2	VFD acceleration ramp 2
Decel2	VFD deceleration ramp 2
FreqCommand	Logix command frequency
Pt00DeviceIn	Network input to DeviceLogix engine
Pt01DeviceIn	Network input to DeviceLogix engine
Pt02DeviceIn	Network input to DeviceLogix engine
Pt03DeviceIn	Network input to DeviceLogix engine
Pt04DeviceIn	Network input to DeviceLogix engine
Pt05DeviceIn	Network input to DeviceLogix engine
Pt06DeviceIn	Network input to DeviceLogix engine
Pt07DeviceIn	Network input to DeviceLogix engine
Pt08DeviceIn	Network input to DeviceLogix engine
Pt09DeviceIn	Network input to DeviceLogix engine
Pt10DeviceIn	Network input to DeviceLogix engine
Pt11DeviceIn	Network input to DeviceLogix engine
Pt12DeviceIn	Network input to DeviceLogix engine
Pt13DeviceIn	Network input to DeviceLogix engine
Pt14DeviceIn	Network input to DeviceLogix engine
Pt15DeviceIn	Network input to DeviceLogix engine
Int00DeviceIn	Network analog input to DeviceLogix engine

Table 14 - Bulletin 294E Produced Assembly/Status Tag Explanation

Device Input Status Tags	Tag Description/Use
Fault	Communication fault between PLC and device (all 1s = fault, all 0s = normal)
TripPresent	Fault exists within unit
WarningPresent	Warning of potential fault
RunningForward	Motor commanded to run forward
RunningReverse	Motor commanded to run reverse
Ready	Control and 3-phase power present
NetworkControlStatus	Start and Stop command comes from network (PLC or Connected Explicit Messaging)

Device Input Status Tags	Tag Description/Use
NetworkReferenceStatus	Speed reference comes from the network (not DeviceLogix)
AtReference	At commanded speed reference
DeviceLogixEnabled	DeviceLogix is enabled
KeypadAuto	HOA is in Auto mode
KeypadOff	HOA is in Off mode
KeypadHand	HOA is in Hand mode
KeypadJogging	HOA is in Jog mode
DisconnectClosed	Disconnect is closed
BrakeContactorStatus	Source brake contactor status (1 = close, 0 = open)
OutputFrequency	VFD frequency
Pt00Data	User-configured I/O status
Pt01Data	User-configured I/O status
Pt02Data	User-configured I/O status
Pt03Data	User-configured I/O status
Pt04Data	ASLT_DEMO:I.Pt04Data
Pt05Data	User-configured I/O status
Pt00DeviceOut	DeviceLogix network output status
Pt01DeviceOut	DeviceLogix network output status
Pt02DeviceOut	DeviceLogix network output status
Pt03DeviceOut	DeviceLogix network output status
Pt04DeviceOut	DeviceLogix network output status
Pt05DeviceOut	DeviceLogix network output status
Pt06DeviceOut	DeviceLogix network output status
Pt07DeviceOut	DeviceLogix network output status
Pt08DeviceOut	DeviceLogix network output status
Pt09DeviceOut	DeviceLogix network output status
Pt10DeviceOut	DeviceLogix network output status
Pt11DeviceOut	DeviceLogix network output status
Pt12DeviceOut	DeviceLogix network output status
Pt13DeviceOut	DeviceLogix network output status
Pt14DeviceOut	DeviceLogix network output status
Pt15DeviceOut	DeviceLogix network output status
Int00DeviceOut	DeviceLogix network analog output
OutputCurrent	VFD output current — Parameter 3
OutputVoltage	VFD output voltage — Parameter 4
DCBusVoltage	VFD DC bus voltage — Parameter 5
SwitchedVoltageLevel	Switched control power voltage — Parameter 11
UnswitchedVoltageLevel	Unswitched control power voltage — Parameter 12
InternalFanRPM	VFD fan speed — Parameter 13
OperatingHours	Elapse run hours — Parameter 14
DriveTemperature	VFD internal temperature — Parameter 15
TripStatus	Bit enumerate trip status — Parameter 16
WarningStatus	Bit enumerate warning status — Parameter 17

Table 15 - Default Consume Assembly for Bulletin 290D/291D

Instance 150 "Starter Cmd" - DeviceLogix Consumed Assembly for 290D / 291D Starters								
Byte	Bit 7	Bit 6	Bit 5	Bit 4	Bit 3	Bit 2	Bit 1	Bit 0
0						**ResetFault**	RunReverse	RunForward
1			**Out05**	Out04	Out03	Out02	Out01	Out00
2	Pt07DeviceIn	Pt06DeviceIn	Pt05DeviceIn	Pt04DeviceIn	Pt03DeviceIn	Pt02DeviceIn	Pt01DeviceIn	Pt00DeviceIn
3	Pt15DeviceIn	Pt14DeviceIn	Pt13DeviceIn	Pt12DeviceIn	Pt11DeviceIn	Pt10DeviceIn	Pt09DeviceIn	Pt08DeviceIn
4	AnalogDeviceIn (low byte)							
5	AnalogDeviceIn (high byte)							

Table 16 - Default Produce Compact Assembly for Bulletin 290D/291D

Instance 151 "Compact Status" - Compact Produced Assembly for 290D / 291D Starters								
Byte	Bit 7	Bit 6	Bit 5	Bit 4	Bit 3	Bit 2	Bit 1	Bit 0
0	CurrentFlowing		NetControlStatus	Ready	RunningReverse	RunningForward	WarningPresent	TripPresent
1		DisconnectClosed			KeyPadHand	KeyPadOff	KeyPadAuto	DLXEnabled
2			Pt05	Pt04	Pt03	Pt02	Pt01	Pt00
3								
4	Pt07DeviceOut	Pt06DeviceOut	Pt05DeviceOut	Pt04DeviceOut	Pt03DeviceOut	Pt02DeviceOut	Pt01DeviceOut	Pt00DeviceOut
5	Pt15DeviceOut	Pt14DeviceOut	Pt13DeviceOut	Pt12DeviceOut	Pt11DeviceOut	Pt10DeviceOut	Pt09DeviceOut	Pt08DeviceOut

The following table provides a brief explanation for the tag function:

Table 17 - Bulletin 290D/291D Consume Assembly Command Tag Explanation

Device Output Command Tags	Tag Description/Use
RunForward	Command VFD forward
RunReverse	Command VFD reverse
ResetFault	Fault reset
Pt00Data	If user defined as output, commnd output ON
Pt01Data	If user defined as output, commnd output ON
Pt02Data	If user defined as output, commnd output ON
Pt03Data	If user defined as output, commnd output ON
Pt04Data	If user defined as output, commnd output ON
Pt05Data	If user defined as output, commnd output ON
Pt00DeviceIn	Network input to DeviceLogix engine
Pt01DeviceIn	Network input to DeviceLogix engine
Pt02DeviceIn	Network input to DeviceLogix engine
Pt03DeviceIn	Network input to DeviceLogix engine
Pt04DeviceIn	Network input to DeviceLogix engine
Pt05DeviceIn	Network input to DeviceLogix engine
Pt06DeviceIn	Network input to DeviceLogix engine
Pt07DeviceIn	Network input to DeviceLogix engine
Pt08DeviceIn	Network input to DeviceLogix engine
Pt09DeviceIn	Network input to DeviceLogix engine
Pt10DeviceIn	Network input to DeviceLogix engine
Pt11DeviceIn	Network input to DeviceLogix engine
Pt12DeviceIn	Network input to DeviceLogix engine
Pt13DeviceIn	Network input to DeviceLogix engine
Pt14DeviceIn	Network input to DeviceLogix engine
Pt15DeviceIn	Network input to DeviceLogix engine
Int00DeviceIn	Network analog input to DeviceLogix engine

Table 18 - Bulletin 290D/291D Produced Assembly Status Tag Explanation

Device Input Status Tags	Tag Description/Use
Fault	Communication fault between PLC and device (all 1s = fault, all 0s = normal)
TripPresent	Fault exists within unit
WarningPresent	Warning of potential fault
RunningForward	Motor commanded to run forward
RunningReverse	Motor commanded to run reverse
Ready	Control and 3-phase power present
CurrentFlowing	Current is passing to motor
DeviceLogixEnabled	DeviceLogix is enabled
KeypadAuto	HOA is in Auto mode
KeypadOff	HOA is in Off mode
KeypadHand	HOA is in Hand mode
DisconnectClosed	Disconnect is closed
Pt00Data	User-configured I/O status
Pt01Data	User-configured I/O status
Pt02Data	User-configured I/O status
Pt03Data	User-configured I/O status
Pt04Data	ASLT_DEMO:I.Pt04Data
Pt05Data	User-configured I/O status
Pt00DeviceOut	DeviceLogix network output status
Pt01DeviceOut	DeviceLogix network output status
Pt02DeviceOut	DeviceLogix network output status
Pt03DeviceOut	DeviceLogix network output status
Pt04DeviceOut	DeviceLogix network output status
Pt05DeviceOut	DeviceLogix network output status
Pt06DeviceOut	DeviceLogix network output status
Pt07DeviceOut	DeviceLogix network output status
Pt08DeviceOut	DeviceLogix network output status
Pt09DeviceOut	DeviceLogix network output status
Pt10DeviceOut	DeviceLogix network output status
Pt11DeviceOut	DeviceLogix network output status
Pt12DeviceOut	DeviceLogix network output status
Pt13DeviceOut	DeviceLogix network output status
Pt14DeviceOut	DeviceLogix network output status
Pt15DeviceOut	DeviceLogix network output status
Int00DeviceOut	DeviceLogix network analog output
L1Current	Phase A current
L2Current	Phase B current
L3Current	Phase C current
AvgCurrent	Average phase A, B, and C current
PercentTCU	Overload percentage thermal utilization (100% = overload trip)
SwitchedVoltageLevel	Switched control power voltage — Parameter 11

Device Input Status Tags	Tag Description/Use
UnswitchedVoltageLevel	Unswitched control power voltage — Parameter 12
TripStatus	Bit enumerate trip status — Parameter 16
WarningStatus	Bit enumerate warning status — Parameter 17

Notes:

Bulletin 290D/291D/294D Programmable Parameters

Electronic Data Sheet (EDS)

An embedded EDS file can be uploaded directly from the ArmorStart LT. EDS files are also available on the internet at: http://www.ab.com/networks/eds.

Basic Setup Parameters

Table 19 lists the minimum setup configurations required for Bulletin 290D/291D or Bulletin 294D.

RSLogix 5000 is the recommended commissioning software. Download the Add-On-Profile (AOP) from http://support.rockwellautomation.com/controlflash/LogixProfiler.asp for additional functionality. There are additional capabilities that are not enabled or left at their default values.

Table 19 - Quick Parameter Setup

Bulletin 290D/291D	Bulletin 294D
28 FLASetting **29** OLResetLevel **30** OverloadClass **49** IOPointConfiguration	**28** MotorNPVolts **29** MotorNPHertz **30** MotorOLCurrent **32** StopMode **34** MinimumFreq **35** MaximumFreq **36** AccelTime1 **37** DecelTime1 **49** IOPointConfiguration

IMPORTANT All I/O points are configured as inputs, by default. Identify which points are outputs, when needed for proper operation, using parameter 49 [IOPointConfiguration].

Parameter Groups

Bulletin 290D/291D Units	Bulletin 294D Units	Common to Bulletin 290D/291D and Bulletin 294D Units		Bulletin 290D/291D Units
Basic Status		**Trip Status**		**Basic Config**
1 PhaseL1Current **2** PhaseL2Current **3** PhaseL3Current **4** AverageCurrent **5**%ThermalUtilized **6** StarterStatus **7** StarterCommand **8** AuxIOStatus **9** NetworkStatus **10** DLXControlStatus **11** OutputSourceV **12** SensorSourceV **13** Reserved **14** Reserved **15** Reserved	**1** OutputFreq **2** CommandFreq **3** OutputCurrent **4** OutputVoltage **5** DCBusVoltage **6** StarterStatus **7** StarterCommand **8** AuxIOStatus **9** NetworkStatus **10** DLXControlStatus **11** OutputSourceV **12** SensorSourceV **13** InternalFanRPM **14** ElapsedRunTime **15** DriveTemperature	**16** TripStatus **17** WarningStatus **18** TripLog0 **19** TripLog1	**20** TripLog2 **21** TripLog3 **22** TripLog4	**28** FLASetting **29** OLResetLevel **30** OverloadClass **31**…**40** Reserved
		Bulletin 290D/291D Units	**Bulletin 294D Units**	
		Trip Status		
		23 SnapShotL1Amps **24** SnapShotL2Amps **25** SnapShotL3Amps **26** SnapShotAvgAmps **27** SnapShot%Thermal	**23** SnapShotOutFreq **24** SnapShotOutAmps **25** SnapShotOutVolts **26** SnapShotBusVolts **27** SnapShotDrvTemp	

Bulletin 294D Units		Common to Bulletin 290D/291D and Bulletin 294D Units		
Motor and Control	**Speed Control**	**Starter Protection**	**User I/O Config.**	**Miscellaneous Config.**
28 MotorNPVolts **29** MotorNPHertz **30** MotorOLCurrent **31** CurrentLimit **32** StopMode	**33** SpeedReference **34** MinimumFreq **35** MaximumFreq **36** AccelTime1 **37** DecelTime1 **38** SCurvePercent **39** JogFrequency **40** JogAccelDecel	**41** ProtFltResetMode **42** ProtectFltEnable **43** WarningEnable **44** ProtectFltReset **45** RunNetFltAction **46** RunNetFaultValue **47** RunNetIdleAction **48** RunNetIdleValue	**49** IOPointConfigure **50** FilterOffOn **51** FilterOnOff **52** OutProtFltState **53** OutProtFltValue **54** OutNetFaultState **55** OutNetFaultValue **56** OutNetIdleState **57** OutNetIdleValue **58** Input00Function **59** Input01Function **60** Input02Function **61** Input03Function **62** Input04Function **63** Input05Function	**64** NetworkOverride **65** CommsOverride **66** KeypadMode **67** KeypadDisable **68** SetToDefaults
Bulletin 290D/291D Units	**Bulletin 294D Units**	**Network Group**	**ZIP Group**	
Advanced Config.				
69 OLWarningLevel **70** JamInhibitTime **71** JamTripDelay **72** JamTripLevel **73** JamWarningLevel **74** StallEnabledTime **75** StallTripLevel **76** ULInhibitTime **77** ULTripDelay **78** ULTripLevel **79** ULWarningLevel	**69** AccelTime2 **70** Dtention **72** InternalFreq **73** SkipFrequency **74** SkipFreqBand **75** DCBrakeTime **76** DCBrakeLevel **77** ReverseDisable **78** FlyingStartEna **79** Compensation **80** SlipHertzAtFLA **81** BusRegulateMode **82** MotorOLSelect **83** SWCurrentTrip **84** AutoRestartTries **85** AutoRestartDelay **86** BoostSelect **87** MaximumVoltage **88** MotorNamPlateFLA **89** BrakeMode **90** BrakeFreqThresh **91** BrakeCurrThresh **92** OptionMatch	**100** AutobaudEnable **101** ConsumedIOAssy **102** ProducedIOAssy	**103** AutoRunZip **104** ZoneProducedEPR **105** ZoneProducedPIT **106** Zone1MacId **107** Zone2MacId **108** Zone3MacId **109** Zone4MacId **110** Zone1Health **111** Zone2Health **112** Zone3Health **113** Zone4Health **114** Zone1PtMask **115** Zone2PtMask **116** Zone3PtMask **117** Zone4PtMask **118** Zone1PtOffset **119** Zone2PtOffset **120** Zone3PtOffset **121** Zone4PtOffset **122** Zone1AnalogMask **123** Zone2AnalogMask	**124** Zone3AnalogMask **125** Zone4AnalogMask **126** Zone1AnOffset **127** Zone2AnOffset **128** Zone3AnOffset **129** Zone4AnOffset **130** Zone1EPR **131** Zone2EPR **132** Zone3EPR **133** Zone4EPR **134** Zone1Control **135** Zone2Control **136** Zone3Control **137** Zone4Control **138** Zone1Key **139** Zone2Key **140** Zone3Key **141** Zone4Key **142** DeviceValueKey **143** ZoneCtrlEnable

ArmorStart LT DeviceNet Parameters

Introduction

This chapter describes each programmable parameter and its function.

Parameter Programming

Each Distributed Motor Controller type will have a common set of parameters and a set of parameters that pertain to the individual starter type. Parameters 41…68 are common to all ArmorStart LTs.

IMPORTANT Parameter setting changes take effect immediately unless otherwise noted in the parameter listing. These changes maybe immediate even during the "running" status.

Bulletin 290D/291D

Basic Status Group

PhaseL1Current This parameter determines the actual Phase L1 current.	Parameter Number	1
	Access Rule	GET
	Data Type	INT
	Group	Basic Status
	Units	x.xx Amps
	Minimum Value	0
	Maximum Value	32767
	Default Value	0

PhaseL2Current This parameter determines the actual Phase L2 current.	Parameter Number	2
	Access Rule	GET
	Data Type	INT
	Group	Basic Status
	Units	x.xx Amps
	Minimum Value	0
	Maximum Value	32767
	Default Value	0

PhaseL3Current This parameter determines the actual Phase L3 current.	Parameter Number	3
	Access Rule	GET
	Data Type	INT
	Group	Basic Status
	Units	x.xx Amps
	Minimum Value	0
	Maximum Value	32767
	Default Value	0

AverageCurrent This parameter determines the average of 3 Phase currents.	Parameter Number	4
	Access Rule	GET
	Data Type	INT
	Group	Basic Status
	Units	x.xx Amps
	Minimum Value	0
	Maximum Value	32767
	Default Value	0

%ThermalUtilized This parameter determines the percent of Thermal Capacity used.	Parameter Number	5
	Access Rule	GET
	Data Type	USINT
	Group	Basic Status
	Units	Percent
	Minimum Value	0
	Maximum Value	100
	Default Value	0

StarterStatus This parameter provides the status of the starter.	Parameter Number	6
	Access Rule	GET
	Data Type	WORD
	Group	Basic Status
	Units	—
	Minimum Value	0
	Maximum Value	0x4FBF
	Default Value	0

Bit																Function
15	**14**	**13**	**12**	**11**	**10**	**9**	**8**	**7**	**6**	**5**	**4**	**3**	**2**	**1**	**0**	
—	—	—	—	—	—	—	—	—	—	—	—	—	—	—	X	TripPresent
—	—	—	—	—	—	—	—	—	—	—	—	—	—	X	—	WarningPresent
—	—	—	—	—	—	—	—	—	—	—	—	—	X	—	—	RunningForward
—	—	—	—	—	—	—	—	—	—	—	—	X	—	—	—	RunningReverse
—	—	—	—	—	—	—	—	—	—	—	X	—	—	—	—	Ready
—	—	—	—	—	—	—	—	—	—	X	—	—	—	—	—	NetControlStatus
—	—	—	—	—	—	—	—	—	X	—	—	—	—	—	—	Reserved
—	—	—	—	—	—	—	—	X	—	—	—	—	—	—	—	CurrentFlowing
—	—	—	—	—	—	—	X	—	—	—	—	—	—	—	—	DLXEnabled
—	—	—	—	—	—	X	—	—	—	—	—	—	—	—	—	KeyPadAuto
—	—	—	—	—	X	—	—	—	—	—	—	—	—	—	—	KeyPadOff
—	—	—	—	X	—	—	—	—	—	—	—	—	—	—	—	KeyPadHand
—	—	X	X	—	—	—	—	—	—	—	—	—	—	—	—	Reserved
—	X	—	—	—	—	—	—	—	—	—	—	—	—	—	—	DisconnectClosed
X	—	—	—	—	—	—	—	—	—	—	—	—	—	—	—	Reserved

StarterCommand The parameter provides the Run Command status to the starter.	Parameter Number	7
	Access Rule	GET
	Data Type	WORD
	Group	Basic Status
	Units	—
	Minimum Value	0
	Maximum Value	0x3F07
	Default Value	0

Bit																Function
15	**14**	**13**	**12**	**11**	**10**	**9**	**8**	**7**	**6**	**5**	**4**	**3**	**2**	**1**	**0**	
—	—	—	—	—	—	—	—	—	—	—	—	—	—	—	X	RunForward
—	—	—	—	—	—	—	—	—	—	—	—	—	—	X	—	RunReverse
—	—	—	—	—	—	—	—	—	—	—	—	—	X	—	—	ResetFault
—	—	—	—	—	—	—	—	X	X	X	X	X	—	—	—	Reserved
—	—	—	—	—	—	—	X	—	—	—	—	—	—	—	—	Out00
—	—	—	—	—	—	X	—	—	—	—	—	—	—	—	—	Out01
—	—	—	—	—	X	—	—	—	—	—	—	—	—	—	—	Out02
—	—	—	—	X	—	—	—	—	—	—	—	—	—	—	—	Out03
—	—	—	X	—	—	—	—	—	—	—	—	—	—	—	—	Out04
—	—	X	—	—	—	—	—	—	—	—	—	—	—	—	—	Out05
X	X	—	—	—	—	—	—	—	—	—	—	—	—	—	—	Reserved

AuxIOStatus The parameter provides the status of hardware input/output points.	Parameter Number	8
	Access Rule	GET
	Data Type	WORD
	Group	Basic Status
	Units	—
	Minimum Value	0
	Maximum Value	0x3F
	Default Value	0

Bit																Function
15	**14**	**13**	**12**	**11**	**10**	**9**	**8**	**7**	**6**	**5**	**4**	**3**	**2**	**1**	**0**	
—	—	—	—	—	—	—	—	—	—	—	—	—	—	—	X	Pt00
—	—	—	—	—	—	—	—	—	—	—	—	—	—	X	—	Pt01
—	—	—	—	—	—	—	—	—	—	—	—	—	X	—	—	Pt02
—	—	—	—	—	—	—	—	—	—	—	—	X	—	—	—	Pt03
—	—	—	—	—	—	—	—	—	—	—	X	—	—	—	—	Pt04
—	—	—	—	—	—	—	—	—	—	X	—	—	—	—	—	Pt05
X	X	X	X	X	X	X	X	X	X	—	—	—	—	—	—	Reserved

NetworkStatus The parameter provides the status of the network connections.	Parameter Number	9
	Access Rule	GET
	Data Type	WORD
	Group	Basic Status
	Units	—
	Minimum Value	0
	Maximum Value	0xDF
	Default Value	0

Bit																Function:
15	14	13	12	11	10	9	8	7	6	5	4	3	2	1	0	
—	—	—	—	—	—	—	—	—	—	—	—	—	—	—	X	ExplicitCnxn
—	—	—	—	—	—	—	—	—	—	—	—	—	—	X	—	I/OConnection
—	—	—	—	—	—	—	—	—	—	—	—	—	X	—	—	ExplicitCnxnFlt
—	—	—	—	—	—	—	—	—	—	—	—	X	—	—	—	IOCnxnFault
—	—	—	—	—	—	—	—	—	—	—	X	—	—	—	—	IOCnxnIdle
—	—	—	—	—	—	—	—	X	X	X	—	—	—	—	—	Reserved
—	—	—	—	—	—	—	X	—	—	—	—	—	—	—	—	ZIP1Cnxn
—	—	—	—	—	—	X	—	—	—	—	—	—	—	—	—	ZIP1CnxnFlt
—	—	—	—	—	X	—	—	—	—	—	—	—	—	—	—	ZIP2Cnxn
—	—	—	—	X	—	—	—	—	—	—	—	—	—	—	—	ZIP2CnxnFlt
—	—	—	X	—	—	—	—	—	—	—	—	—	—	—	—	ZIP3Cnxn
—	—	X	—	—	—	—	—	—	—	—	—	—	—	—	—	ZIP3CnxnFlt
—	X	—	—	—	—	—	—	—	—	—	—	—	—	—	—	ZIP4Cnxn
X	—	—	—	—	—	—	—	—	—	—	—	—	—	—	—	ZIP4CnxnFlt

DLXControlStatus The parameter provides the DeviceLogix Control Status. 0 = Controlled in Logix programs. 1 = Controlled in local DLX programs.	Parameter Number	10
	Access Rule	GET
	Data Type	UINT
	Group	Basic Status
	Units	—
	Minimum Value	0
	Maximum Value	0XFF
	Default Value	0

Bit								Function:
7	6	5	4	3	2	1	0	
—	—	—	—	—	—	—	X	RunForward
—	—	—	—	—	—	X	—	RunReverse
—	—	—	—	—	X	—	—	Out00
—	—	—	—	X	—	—	—	Out01

Bit								Function:
7	6	5	4	3	2	1	0	
—	—	—	X	—	—	—	—	Out02
—	—	X	—	—	—	—	—	Out03
—	X	—	—	—	—	—	—	Out04
X	—	—	—	—	—	—	—	Out05

OutputSourceV (IPS) [SwitchedVolts] This parameter determines the incoming switched control voltage across terminals A1…A2. (IPS) Available voltage on User Output Pin 4 for all I/O points	Parameter Number	11
	Access Rule	GET
	Data Type	UINT
	Group	Basic Status
	Units	x.xx Volts
	Minimum Value	0
	Maximum Value	65535
	Default Value	0

SensorSourceV (IPS) [UnswitchedVolts] This parameter determines the incoming unswitched control voltage across terminals A2…A3. (IPS) Available voltage on Input Sensor Source Pin 1 for all I/O points	Parameter Number	12
	Access Rule	GET
	Data Type	UINT
	Group	Basic Status
	Units	x.xx Volts
	Minimum Value	0
	Maximum Value	65535
	Default Value	0

Trip Status Group

TripStatus This parameter provides the fault condition that caused any current trip.	Parameter Number	16
	Access Rule	GET
	Data Type	WORD
	Group	Trip Status
	Units	—
	Minimum Value	0
	Maximum Value	0xE3BF
	Default Value	0

Bit																Function
15	14	13	12	11	10	9	8	7	6	5	4	3	2	1	0	
—	—	—	—	—	—	—	—	—	—	—	—	—	—	—	X	OverloadTrip
—	—	—	—	—	—	—	—	—	—	—	—	—	—	X	—	PhaseLossTrip
—	—	—	—	—	—	—	—	—	—	—	—	—	X	—	—	UnderPowerTrip
—	—	—	—	—	—	—	—	—	—	—	—	X	—	—	—	SensorShortTrip
—	—	—	—	—	—	—	—	—	—	—	X	—	—	—	—	PhaseImbalanceTrip
—	—	—	—	—	—	—	—	—	—	X	—	—	—	—	—	NonVolMemoryTrip
—	—	—	—	—	—	—	—	—	X	—	—	—	—	—	—	Reserved
—	—	—	—	—	—	—	—	X	—	—	—	—	—	—	—	JamTrip
—	—	—	—	—	—	—	X	—	—	—	—	—	—	—	—	StallTrip
—	—	—	—	—	—	X	—	—	—	—	—	—	—	—	—	UnderloadTrip
—	—	—	X	X	X	—	—	—	—	—	—	—	—	—	—	Reserved
—	—	X	—	—	—	—	—	—	—	—	—	—	—	—	—	OutputShortTrip
—	X	—	—	—	—	—	—	—	—	—	—	—	—	—	—	UserDefinedTrip
X	—	—	—	—	—	—	—	—	—	—	—	—	—	—	—	HardwareFltTrip

WarningStatus	Parameter Number	17
This parameter provides the current warning condition.	Access Rule	GET
	Data Type	WORD
	Group	Trip Status
	Units	—
	Minimum Value	0
	Maximum Value	0xC295
	Default Value	

Bit																Function
15	14	13	12	11	10	9	8	7	6	5	4	3	2	1	0	
—	—	—	—	—	—	—	—	—	—	—	—	—	—	—	X	OverloadWarning
—	—	—	—	—	—	—	—	—	—	—	—	—	—	X	—	Reserved
—	—	—	—	—	—	—	—	—	—	—	—	—	X	—	—	UnderPowerWarn
—	—	—	—	—	—	—	—	—	—	—	—	X	—	—	—	Reserved
—	—	—	—	—	—	—	—	—	—	—	X	—	—	—	—	PhaseImbalanceWarn
—	—	—	—	—	—	—	—	—	X	X	—	—	—	—	—	Reserved
—	—	—	—	—	—	—	—	X	—	—	—	—	—	—	—	JamWarning
—	—	—	—	—	—	—	X	—	—	—	—	—	—	—	—	Reserved
—	—	—	—	—	—	X	—	—	—	—	—	—	—	—	—	UnderloadWarning
—	—	X	X	X	X	—	—	—	—	—	—	—	—	—	—	Reserved
—	**X**	—	—	—	—	—	—	—	—	—	—	—	—	—	—	DNetPwrWarn
X	—	—	—	—	—	—	—	—	—	—	—	—	—	—		ConfigWarning

TripLog1 This parameter provides the last trip to occur.	Parameter Number	18
	Access Rule	GET
	Data Type	UINT
	Group	Trip Status
	Units	—
	Minimum Value	0
	Maximum Value	75
	Default Value	0

TripLog2 This parameter provides the second last trip to occur.	Parameter Number	19
	Access Rule	GET
	Data Type	UINT
	Group	Trip Status
	Units	—
	Minimum Value	0
	Maximum Value	75
	Default Value	0

TripLog3 This parameter provides the third last trip to occur.	Parameter Number	20
	Access Rule	GET
	Data Type	UINT
	Group	Trip Status
	Units	—
	Minimum Value	0
	Maximum Value	75
	Default Value	0

TripLog4 This parameter provides the fourth last trip to occur.	Parameter Number	21
	Access Rule	GET
	Data Type	UINT
	Group	Trip Status
	Units	—
	Minimum Value	0
	Maximum Value	75
	Default Value	0

TripLog5 This parameter provides the fifth last trip to occur.	Parameter Number	22
	Access Rule	GET
	Data Type	UINT
	Group	Trip Status
	Units	—
	Minimum Value	0
	Maximum Value	75
	Default Value	0

SnapShotL1Amps This parameter provides a snapshot of actual Phase L1 current at time of last trip.	Parameter Number	23
	Access Rule	GET
	Data Type	INT
	Group	Trip Status
	Units	x.xx Amps
	Minimum Value	0
	Maximum Value	32767
	Default Value	

SnapShotL2Amps This parameter provides a snapshot of actual Phase L2 current at time of last trip.	Parameter Number	24
	Access Rule	GET
	Data Type	INT
	Group	Trip Status
	Units	x.xx Amps
	Minimum Value	0
	Maximum Value	32767
	Default Value	0

SnapShotL3Amps This parameter provides a snapshot of actual Phase L3 current at time of last trip.	Parameter Number	25
	Access Rule	GET
	Data Type	INT
	Group	Trip Status
	Units	x.xx Amps
	Minimum Value	0
	Maximum Value	32767
	Default Value	0

SnapShotLAvgAmps This parameter provides a snapshot of average of 3 Phase currents at time of last trip.	Parameter Number	26
	Access Rule	GET
	Data Type	INT
	Group	Trip Status
	Units	x.xx Amps
	Minimum Value	0
	Maximum Value	32767
	Default Value	0

SnapShot%Thermal This parameter provides a snapshot of the percentage of Thermal Capacity used at time of last trip.	Parameter Number	27
	Access Rule	GET
	Data Type	USINT
	Group	Trip Status
	Units	Percent
	Minimum Value	0
	Maximum Value	100
	Default Value	0

Basic Configuration Group

FLASetting The motor's full load current rating is programmed in this parameter.	Parameter Number	28
	Access Rule	GET/SET
	Data Type	INT
	Group	Basic Configuration
	Units	x.xx Amps
	Minimum Value	See Table 20.
	Maximum Value	See Table 20.
	Default Value	See Table 20.

Table 20 - FLA Setting Ranges and Default Values (with indicated setting precision)

FLA Current Range (A)				Default Value
	460V AC	Minimum Value	Maximum Value	
290D/1_-FA_*	3 Hp	0.24	3.5	0.24
290D/1_-FB_*	5 Hp	1.1	7.6	1.1

OLResetLevel This parameter determines the % Thermal Capacity which an overload can be cleared.	Parameter Number	29
	Access Rule	GET/SET
	Data Type	BYTE
	Group	Basic Configuration
	Units	% TCU
	Minimum Value	75
	Maximum Value	100
	Default Value	75

OverloadClass This parameter provides the overload trip classification. 1 = 10 2 = 15 3 = 20	Parameter Number	30
	Access Rule	GET
	Data Type	USINT
	Group	Basic Configuration
	Units	—
	Minimum Value	1
	Maximum Value	3
	Default Value	1

Starter Protection Group

ProtFltResetMode This parameter configures the Protection Fault reset mode. 0 = Manual 1 = Automatic	Parameter Number	41
	Access Rule	GET/SET
	Data Type	BOOL
	Group	Starter Protection
	Units	—
	Minimum Value	0
	Maximum Value	1
	Default Value	0

ProtectFltEnable This parameter enables or disables protection faults (not all faults can be disabled).	Parameter Number	42
	Access Rule	GET
	Data Type	WORD
	Group	Trip Status
	Units	—
	Minimum Value	0
	Maximum Value	0xE3BF
	Default Value	0

Bit																Function
15	14	13	12	11	10	9	8	7	6	5	4	3	2	1	0	
—	—	—	—	—	—	—	—	—	—	—	—	—	—	—	X	OverloadTrip
—	—	—	—	—	—	—	—	—	—	—	—	—	—	X	—	PhaseLossTrip
—	—	—	—	—	—	—	—	—	—	—	—	—	X	—	—	UnderPowerTrip
—	—	—	—	—	—	—	—	—	—	—	—	X	—	—	—	SensorShortTrip
—	—	—	—	—	—	—	—	—	—	—	X	—	—	—	—	PhaseImbalanceTrip
—	—	—	—	—	—	—	—	—	—	X	—	—	—	—	—	NonVolMemoryTrip
—	—	—	—	—	—	—	—	—	X	—	—	—	—	—	—	Reserved
—	—	—	—	—	—	—	—	X	—	—	—	—	—	—	—	JamTrip
—	—	—	—	—	—	—	X	—	—	—	—	—	—	—	—	StallTrip
—	—	—	—	—	—	X	—	—	—	—	—	—	—	—	—	UnderloadTrip
—	—	—	X	X	X	—	—	—	—	—	—	—	—	—	—	Reserved
—	—	X	—	—	—	—	—	—	—	—	—	—	—	—	—	OutputShortTrip
—	X	—	—	—	—	—	—	—	—	—	—	—	—	—	—	UserDefinedTrip
X	—	—	—	—	—	—	—	—	—	—	—	—	—	—	—	HardwareFltTrip

The highlighted functions are enabled by default.

WarningStatus	Parameter Number	43
This parameter provides the current warning condition.	Access Rule	GET
	Data Type	WORD
	Group	Trip Status
	Units	—
	Minimum Value	0
	Maximum Value	0xC295
	Default Value	

Bit																Function
15	14	13	12	11	10	9	8	7	6	5	4	3	2	1	0	
—	—	—	—	—	—	—	—	—	—	—	—	—	—	—	X	OverloadWarning
—	—	—	—	—	—	—	—	—	—	—	—	—	—	X	—	Reserved
—	—	—	—	—	—	—	—	—	—	—	—	—	X	—	—	UnderPowerWarn
—	—	—	—	—	—	—	—	—	—	—	—	X	—	—	—	Reserved
—	—	—	—	—	—	—	—	—	—	—	X	—	—	—	—	PhasImbalanceWarn
—	—	—	—	—	—	—	—	—	X	X	—	—	—	—	—	Reserved
—	—	—	—	—	—	—	—	X	—	—	—	—	—	—	—	JamWarning
—	—	—	—	—	—	—	X	—	—	—	—	—	—	—	—	Reserved
—	—	—	—	—	—	X	—	—	—	—	—	—	—	—	—	UnderloadWarning
—	—	X	X	X	X	—	—	—	—	—	—	—	—	—	—	Reserved
—	X	—	—	—	—	—	—	—	—	—	—	—	—	—	—	UnswitchedPwrWarn
X	—	—	—	—	—	—	—	—	—	—	—	—	—	—	—	ConfigWarning

ProtectFltReset This parameter resets a Protection Fault by setting the bit to 1. 0 = NoAction 0 > 1 = ResetFault	Parameter Number	44
	Access Rule	GET/SET
	Data Type	BOOL
	Group	Starter Protection
	Units	—
	Minimum Value	0
	Maximum Value	1
	Default Value	0

RunNetFltAction This parameter in conjunction with Parameter 46 (RunNetFltValue) defines how the starter will respond when a fault occurs. 0 = GoToFaultValue 1 = HoldLastState	Parameter Number	45
	Access Rule	GET/SET
	Data Type	BOOL
	Group	Starter Protection
	Units	—
	Minimum Value	0
	Maximum Value	1
	Default Value	0

RunNetFltValue This parameter determines how the starter will be commanded in the event of a fault. State the starter will go to on a NetFlt if Parameter 45 (RunNetFltAction) = 1 (GotoFault-Value). 0 = OFF 1 = ON	Parameter Number	46
	Access Rule	GET/SET
	Data Type	BOOL
	Group	Starter Protection
	Units	—
	Minimum Value	0
	Maximum Value	1
	Default Value	0

RunNetIdlAction This parameter in conjunction with Parameter 48 (RunNetIdlValue) defines how the starter will respond when a network is idle as determined by Parameter 48. 0 = GoToIdleValue 1 = HoldLastState	Parameter Number	47
	Access Rule	GET/SET
	Data Type	BOOL
	Group	Starter Protection
	Units	—
	Minimum Value	0
	Maximum Value	1
	Default Value	0

RunNetIdlValue This parameter determines the state that starter assumes when the network is idle and Parameter 47 (RunNetIdlAction) is set to 1. 0 = OFF 1 = ON	Parameter Number	48
	Access Rule	GET
	Data Type	BOOL
	Group	Starter Protection
	Units	—
	Minimum Value	0
	Maximum Value	1
	Default Value	0

User I/O Configuration Group

IOPointConfigure This parameter determines the point that is configured: 0 = Input 1 = Output	Parameter Number	49
	Access Rule	GET/SET
	Data Type	WORD
	Group	User I/O Config.
	Units	—
	Minimum Value	0
	Maximum Value	0x3F
	Default Value	0

Bit						**Function**
5	**4**	**3**	**2**	**1**	**0**	
—	—	—	—	—	X	Pt00
—	—	—	—	X	—	Pt01
—	—	—	X	—	—	Pt02
—	—	X	—	—	—	Pt03
—	X	—	—	—	—	Pt04
X	—	—	—	—	—	Pt05

FilterOffOn This parameter determines the input (which must be present for this time) before being reported ON.	Parameter Number	50
	Access Rule	GET/SET
	Data Type	USINT
	Group	User I/O Config.
	Units	msecs
	Minimum Value	0
	Maximum Value	64
	Default Value	0

FilterOnOff This parameter determines the input (which must be absent for this time) before being reported OFF.	Parameter Number	51
	Access Rule	GET/SET
	Data Type	USINT
	Group	User I/O Config.
	Units	msecs
	Minimum Value	0
	Maximum Value	64
	Default Value	0

OutProtFltState This parameter in conjunction with Parameter 53 (OutProtFltValue) defines how the starter outputs will respond when a fault occurs. 0 = GoToPrFltValue 1 = IgnorePrFlt	Parameter Number	52
	Access Rule	GET/SET
	Data Type	BOOL
	Group	User I/O Config.
	Units	—
	Minimum Value	0
	Maximum Value	1
	Default Value	0

OutProtFltValue This parameter determines how the starter outputs will be commanded in the event of a protection fault if Parameter 52 (OutProtFltState) = 0. 0 = OFF 1 = ON	Parameter Number	53
	Access Rule	GET/SET
	Data Type	BOOL
	Group	User I/O Config.
	Units	—
	Minimum Value	0
	Maximum Value	1
	Default Value	0

OutNetFaultState This parameter in conjunction with Parameter 55 (OutNetFaultValue) defines how the starter outputs will respond on an Ethernet fault. 0 = GoToFaultValue 1 = HoldLastState	Parameter Number	54
	Access Rule	GET/SET
	Data Type	BOOL
	Group	User I/O Config.
	Units	—
	Minimum Value	0
	Maximum Value	1
	Default Value	0

OutNetFaultValue	Parameter Number	55
This parameter determines the state of the starter outputs when an Ethernet fault occurs and Parameter 54 (OutNetFaultState) is set to 0. 0 = OFF 1 = ON	Access Rule	GET
	Data Type	BOOL
	Group	User I/O Config.
	Units	—
	Minimum Value	0
	Maximum Value	1
	Default Value	0

OutNetIdleState	Parameter Number	56
This parameter in conjunction with Parameter 57 (OutNetIdleValue) defines how the starter outputs will respond when a network is idle. 0 = GoToIdleValue 1 = HoldLastState	Access Rule	GET/SET
	Data Type	BOOL
	Group	User I/O Config.
	Units	—
	Minimum Value	0
	Maximum Value	1
	Default Value	0

OutNetIdleValue	Parameter Number	57
This parameter determines the state that starter outputs assumes when the network is idle and Parameter 56 (OutNetIdleState) is set to 0. 0 = OFF 1 = ON	Access Rule	GET
	Data Type	BOOL
	Group	User I/O Config.
	Units	—
	Minimum Value	0
	Maximum Value	1
	Default Value	0

Input00Function	Parameter Number	58
This parameter determines the special function for User Input 0: 0 = NoFunction 1 = FaultReset 2 = MotionDisable❶ 3 = ForceSnapShot 4 = UserFault 5 = BrakeRelease❶ ❶ These choices are level sensitive. All others are edge sensitive	Access Rule	GET/SET
	Data Type	USINT
	Group	User I/O Config.
	Units	—
	Minimum Value	0
	Maximum Value	4
	Default Value	0

Input01Function	Parameter Number	59
This parameter determines the special function for User Input 1: 0 = NoFunction 1 = FaultReset 2 = MotionDisable❶ 3 = ForceSnapShot 4 = UserFault 5 = BrakeRelease❶ ❶ These choices are level sensitive. All others are edge sensitive	Access Rule	GET/SET
	Data Type	USINT
	Group	User I/O Config.
	Units	—
	Minimum Value	0
	Maximum Value	4
	Default Value	0

Input02Function	Parameter Number	60
This parameter determines the special function for User Input 2: 0 = NoFunction 1 = FaultReset 2 = MotionDisable❶ 3 = ForceSnapShot 4 = UserFault 5 = BrakeRelease❶ ❶ These choices are level sensitive. All others are edge sensitive	Access Rule	GET/SET
	Data Type	USINT
	Group	User I/O Config.
	Units	—
	Minimum Value	0
	Maximum Value	4
	Default Value	0

Input03Function	Parameter Number	61
This parameter determines the special function for User Input 3: 0 = NoFunction 1 = FaultReset 2 = MotionDisable❶ 3 = ForceSnapShot 4 = UserFault 5 = BrakeRelease❶ ❶ These choices are level sensitive. All others are edge sensitive	Access Rule	GET/SET
	Data Type	USINT
	Group	User I/O Config.
	Units	—
	Minimum Value	0
	Maximum Value	4
	Default Value	0

Input04Function	Parameter Number	62
This parameter determines the special function for User Input 4: 0 = NoFunction 1 = FaultReset 2 = MotionDisable❶ 3 = ForceSnapShot 4 = UserFault 5 = BrakeRelease❶ ❶ These choices are level sensitive. All others are edge sensitive	Access Rule	GET/SET
	Data Type	USINT
	Group	User I/O Config.
	Units	—
	Minimum Value	0
	Maximum Value	4
	Default Value	0

Input05Function	Parameter Number	63
This parameter determines the special function for User Input 5: 0 = NoFunction 1 = FaultReset 2 = MotionDisable❶ 3 = ForceSnapShot 4 = UserFault 5 = BrakeRelease❶ ❶ These choices are level sensitive. All others are edge sensitive	Access Rule	GET/SET
	Data Type	USINT
	Group	User I/O Config.
	Units	—
	Minimum Value	0
	Maximum Value	4
	Default Value	0

Miscellaneous Configuration Group

Network0verride	Parameter Number	64
This parameter allows for the local logic to override a Network fault. 0 = Disable 1 = Enable	Access Rule	GET/SET
	Data Type	BOOL
	Group	Misc. Config.
	Units	—
	Minimum Value	0
	Maximum Value	1
	Default Value	0

Comms0verride	Parameter Number	65
This parameter allows for local logic to override an I/O connection timeout. 0 = Disable 1 = Enable	Access Rule	GET/SET
	Data Type	BOOL
	Group	Misc. Config.
	Units	—
	Minimum Value	0
	Maximum Value	1
	Default Value	0

KeypadMode	Parameter Number	66
This parameter selects if the keypad operation is maintained or momentary. 0 = Momentary 1 = Maintained	Access Rule	GET/SET
	Data Type	BOOL
	Group	Misc. Config.
	Units	—
	Minimum Value	0
	Maximum Value	1
	Default Value	0

KeypadDisable This parameter disables all keypad function except for the "OFF" and "RESET" buttons. 0 = KeypadEnabled 1 = KeypadDisabled	Parameter Number	67
	Access Rule	GET/SET
	Data Type	BOOL
	Group	Misc. Config.
	Units	—
	Minimum Value	0
	Maximum Value	1
	Default Value	0

SetToDefaults This parameter if set to "1" will set the device to the factory defaults. 0 = NoAction 1 = SetToDefaults	Parameter Number	68
	Access Rule	GET/SET
	Data Type	BOOL
	Group	Misc. Config.
	Units	—
	Minimum Value	0
	Maximum Value	1
	Default Value	0

Advanced Configuration

OLWarningLevel This parameter determines the Overload Warning Level in % Thermal Capacity Used (%TCU).	Parameter Number	69
	Access Rule	GET
	Data Type	USINT
	Group	Advanced Config.
	Units	%TCU
	Minimum Value	0
	Maximum Value	100
	Default Value	85

JamInhibitTime This parameter determines the time during motor starting that Jam detection is inhibited.	Parameter Number	70
	Access Rule	GET
	Data Type	USINT
	Group	Advanced Config.
	Units	secs.
	Minimum Value	0
	Maximum Value	250
	Default Value	10

JamTripDelay This parameter determines how much time above the Jam Level before the unit will trip.	Parameter Number	71
	Access Rule	GET
	Data Type	USINT
	Group	Advanced Config.
	Units	x.x secs
	Minimum Value	1
	Maximum Value	25.0
	Default Value	5.0

JamTripLevel This parameter determines the Jam Trip Level as a percentage of Full Load Amps.	Parameter Number	72
	Access Rule	GET
	Data Type	UINT
	Group	Advanced Config.
	Units	%FLA
	Minimum Value	50
	Maximum Value	600
	Default Value	250

JamWarningLevel This parameter determines the Jam Warning Level as a percentage of Full Load Amps.	Parameter Number	73
	Access Rule	GET
	Data Type	UINT
	Group	Advanced Config.
	Units	%FLA
	Minimum Value	50
	Maximum Value	600
	Default Value	150

StallEnabledTime This parameter determines the time that stall detection is enabled during motor starting.	Parameter Number	74
	Access Rule	GET
	Data Type	USINT
	Group	Advanced Config.
	Units	secs
	Minimum Value	0
	Maximum Value	250
	Default Value	10

StallTripLevel This parameter determines the Stall Trip Level as a percentage of Full Load Amps.	Parameter Number	75
	Access Rule	GET
	Data Type	UINT
	Group	Advanced Config.
	Units	%FLA
	Minimum Value	100
	Maximum Value	600
	Default Value	600

ULInhibitTime This parameter determines the time during motor starting that Underload detection is inhibited.	Parameter Number	76
	Access Rule	GET
	Data Type	USINT
	Group	Advanced Config.
	Units	secs
	Minimum Value	0
	Maximum Value	250
	Default Value	10

ULTripDelay This parameter determines the time below Underload Level before the unit will trip.	Parameter Number	77
	Access Rule	GET
	Data Type	USINT
	Group	Advanced Config.
	Units	x.x secs
	Minimum Value	1
	Maximum Value	25.0
	Default Value	5.0

ULTripLevel This parameter determines the Underload Trip Level as a percentage of Full Load Amps.	Parameter Number	78
	Access Rule	GET
	Data Type	USINT
	Group	Advanced Config.
	Units	%FLA
	Minimum Value	10
	Maximum Value	100
	Default Value	50

ULWarningLevel This parameter determines the Underload Warning Level as a percentage of Full Load Amps.	Parameter Number	79
	Access Rule	GET
	Data Type	USINT
	Group	Advanced Config.
	Units	%FLA
	Minimum Value	10
	Maximum Value	100
	Default Value	70

OptionMatch If product options do not match value, a hardware fault will occur.	Parameter Number	92
	Access Rule	GET/SET
	Data Type	DWORD
	Group	Advance Config
	Units	–
	Minimum Value	0
	Maximum Value	0xffffffff
	Default Value	0

Bit					**Function**
4-31	**3**	**2**	**1**	**0**	
—	—	—	—	X	KeypadPreesent
—	—	—	X	—	KeypadNotPresent
—	—	X	—	—	BrakePresent
—	X	—	—	—	BrakeNotPresent
X	—	—	—	—	Reserved

AutobaudEnable Autobaud enabled when set 0=Disable 1=Enable	Parameter Number	100
	Access Rule	SET
	Data Type	BOOL
	Group	Network
	Units	–
	Minimum Value	0
	Maximum Value	1
	Default Value	1

ConsumedIOAssy Selects the format of the I/O data consumed 290 default = 150	Parameter Number	101
	Access Rule	SET
	Data Type	USINT
	Group	Network
	Units	–
	Minimum Value	3
	Maximum Value	150
	Default Value	150

ProducedIOAssy Selects the format of the I/O data consumed 290 default = 151	Parameter Number	102
	Access Rule	SET
	Data Type	USINT
	Group	Network
	Units	–
	Minimum Value	52
	Maximum Value	151
	Default Value	151

AutoRunZip Enables this device to produce COS messages on powerup 0=Disable 1=Enable	Parameter Number	103
	Access Rule	SET
	Data Type	BOOL
	Group	ZIP
	Units	–
	Minimum Value	0
	Maximum Value	1
	Default Value	0

ZoneProducedEPR Expected Packet Rate for producing Zip COS connection	Parameter Number	104
	Access Rule	SET
	Data Type	UINT
	Group	ZIP
	Units	msec
	Minimum Value	1
	Maximum Value	65535
	Default Value	75

ZoneProducedPIT Production Inhibit Time for the producing Zip connection	Parameter Number	105
	Access Rule	SET
	Data Type	UINT
	Group	ZIP
	Units	msec
	Minimum Value	1
	Maximum Value	65535
	Default Value	75

Zone1ProducedMacId The MacId address of the device in Zone 1	Parameter Number	106
	Access Rule	SET
	Data Type	USINT
	Group	ZIP
	Units	–
	Minimum Value	0
	Maximum Value	64
	Default Value	64

Zone2ProducedMacId The MacId address of the device in Zone 2	Parameter Number	107
	Access Rule	SET
	Data Type	USINT
	Group	ZIP
	Units	–
	Minimum Value	0
	Maximum Value	64
	Default Value	64

Zone3ProducedMacId The MacId address of the device in Zone 3	Parameter Number	108
	Access Rule	SET
	Data Type	USINT
	Group	ZIP
	Units	–
	Minimum Value	0
	Maximum Value	64
	Default Value	64

Zone4ProducedMacId The MacId address of the device in Zone 4	Parameter Number	109
	Access Rule	SET
	Data Type	USINT
	Group	ZIP
	Units	–
	Minimum Value	0
	Maximum Value	64
	Default Value	64

Zone1Health The status of the DeviceNet connection to the Zone 1 device 0=Healthy 1=NotHealthy	Parameter Number	110
	Access Rule	GET
	Data Type	BOOL
	Group	ZIP
	Units	–
	Minimum Value	0
	Maximum Value	1
	Default Value	0

Zone2Health The status of the DeviceNet connection to the Zone 2device 0=Healthy 1=NotHealthy	Parameter Number	111
	Access Rule	GET
	Data Type	BOOL
	Group	ZIP
	Units	–
	Minimum Value	0
	Maximum Value	1
	Default Value	0

Zone3Health The status of the DeviceNet connection to the Zone 3device 0=Healthy 1=NotHealthy	Parameter Number	112
	Access Rule	GET
	Data Type	BOOL
	Group	ZIP
	Units	–
	Minimum Value	0
	Maximum Value	1
	Default Value	0

Zone4Health The status of the DeviceNet connection to the Zone 4device 0=Healthy 1=NotHealthy	Parameter Number	113
	Access Rule	GET
	Data Type	BOOL
	Group	ZIP
	Units	–
	Minimum Value	0
	Maximum Value	1
	Default Value	0

Zone1PtMask Chooses consumed bytes to be placed in Zone Data Point table	Parameter Number	114
	Access Rule	SET
	Data Type	DWORD
	Group	ZIP
	Units	–
	Minimum Value	0
	Maximum Value	255
	Default Value	0

Zone2PtMask Chooses consumed bytes to be placed in Zone Data Point table	Parameter Number	115
	Access Rule	SET
	Data Type	DWORD
	Group	ZIP
	Units	–
	Minimum Value	0
	Maximum Value	255
	Default Value	0

Zone3PtMask Chooses consumed bytes to be placed in Zone Data Point table	Parameter Number	116
	Access Rule	SET
	Data Type	DWORD
	Group	ZIP
	Units	–
	Minimum Value	0
	Maximum Value	255
	Default Value	0

Zone4PtMask Chooses consumed bytes to be placed in Zone Data Point table	Parameter Number	117
	Access Rule	SET
	Data Type	DWORD
	Group	ZIP
	Units	–
	Minimum Value	0
	Maximum Value	255
	Default Value	0

Zone1Pt0ffset Byte offset in Zone Data Point table to place masked data	Parameter Number	118
	Access Rule	SET
	Data Type	UINT
	Group	ZIP
	Units	–
	Minimum Value	0
	Maximum Value	7
	Default Value	0

Zone2Pt0ffset Byte offset in Zone Data Point table to place masked data	Parameter Number	119
	Access Rule	SET
	Data Type	UINT
	Group	ZIP
	Units	–
	Minimum Value	0
	Maximum Value	7
	Default Value	0

Zone3Pt0ffset Byte offset in Zone Data Point table to place masked data	Parameter Number	120
	Access Rule	SET
	Data Type	UINT
	Group	ZIP
	Units	–
	Minimum Value	0
	Maximum Value	7
	Default Value	0

Zone1Pt0Offset Byte offset in Zone Data Point table to place masked data	Parameter Number	121
	Access Rule	SET
	Data Type	UINT
	Group	ZIP
	Units	–
	Minimum Value	0
	Maximum Value	7
	Default Value	0

Zone1AnalogMask Byte offset in Zone Data Point table to place masked data	Parameter Number	122
	Access Rule	SET
	Data Type	WORD
	Group	ZIP
	Units	–
	Minimum Value	0
	Maximum Value	255
	Default Value	0

Zone2AnalogMask Byte offset in Zone Data Point table to place masked data	Parameter Number	123
	Access Rule	SET
	Data Type	WORD
	Group	ZIP
	Units	–
	Minimum Value	0
	Maximum Value	255
	Default Value	0

Zone3AnalogMask Byte offset in Zone Data Point table to place masked data	Parameter Number	124
	Access Rule	SET
	Data Type	WORD
	Group	ZIP
	Units	–
	Minimum Value	0
	Maximum Value	255
	Default Value	0

Zone4AnalogMask Byte offset in Zone Data Point table to place masked data	Parameter Number	125
	Access Rule	SET
	Data Type	WORD
	Group	ZIP
	Units	–
	Minimum Value	0
	Maximum Value	255
	Default Value	0

Zone1AnOffset Word offset in Analog Zone Data to place masked analog data	Parameter Number	126
	Access Rule	SET
	Data Type	UINT
	Group	ZIP
	Units	–
	Minimum Value	0
	Maximum Value	7
	Default Value	0

Zone2AnOffset Word offset in Analog Zone Data to place masked analog data	Parameter Number	127
	Access Rule	SET
	Data Type	UINT
	Group	ZIP
	Units	–
	Minimum Value	0
	Maximum Value	7
	Default Value	0

Zone3AnOffset Word offset in Analog Zone Data to place masked analog data	Parameter Number	128
	Access Rule	SET
	Data Type	UINT
	Group	ZIP
	Units	–
	Minimum Value	0
	Maximum Value	7
	Default Value	0

Zone4AnOffset Word offset in Analog Zone Data to place masked analog data	Parameter Number	129
	Access Rule	SET
	Data Type	UINT
	Group	ZIP
	Units	–
	Minimum Value	0
	Maximum Value	7
	Default Value	0

Zone1EPR Expected Packet Rate for Zone 1 consuming connection	Parameter Number	130
	Access Rule	SET
	Data Type	UINT
	Group	ZIP
	Units	msec
	Minimum Value	0
	Maximum Value	65535
	Default Value	75

Zone2EPR Expected Packet Rate for Zone 2 consuming connection	Parameter Number	131
	Access Rule	SET
	Data Type	UINT
	Group	ZIP
	Units	msec
	Minimum Value	0
	Maximum Value	65535
	Default Value	75

Zone3EPR Expected Packet Rate for Zone 3 consuming connection	Parameter Number	132
	Access Rule	SET
	Data Type	UINT
	Group	ZIP
	Units	msec
	Minimum Value	0
	Maximum Value	65535
	Default Value	75

Zone4EPR Expected Packet Rate for Zone 4 consuming connection	Parameter Number	133
	Access Rule	SET
	Data Type	UINT
	Group	ZIP
	Units	msec
	Minimum Value	0
	Maximum Value	65535
	Default Value	75

Zone1Control Enables/Disables options for Zone 1 control	Parameter Number	134
	Access Rule	SET
	Data Type	BYTE
	Group	ZIP
	Units	–
	Minimum Value	0
	Maximum Value	0x3F
	Default Value	0x02

Bit								Function
7	**6**	**5**	**4**	**3**	**2**	**1**	**0**	
—	—	—	—	—	—	—	X	SecurityEnable
—	—	—	—	—	—	X	—	COSCnxn
—	—	—	—	—	X	—	—	PollCnxn
—	—	—	—	X	—	—	—	StrobeCnxn
—	—	—	X	—	—	—	—	MulticastPoll
—	—	X	—	—	—	—	—	FragmentedIO
X	X	—	—	—	—	—	—	Reserved

Zone2Control Enables/Disables options for Zone 2 control	Parameter Number	135
	Access Rule	SET
	Data Type	BYTE
	Group	ZIP
	Units	–
	Minimum Value	0
	Maximum Value	0x3F
	Default Value	0x02

Bit								Function
7	6	5	4	3	2	1	0	
—	—	—	—	—	—	—	X	SecurityEnable
—	—	—	—	—	—	X	—	COSCnxn
—	—	—	—	—	X	—	—	PollCnxn
—	—	—	—	X	—	—	—	StrobeCnxn
—	—	—	X	—	—	—	—	MulticastPoll
—	—	X	—	—	—	—	—	FragmentedIO
X	X	—	—	—	—	—	—	Reserved

Zone3Control Enables/Disables options for Zone 3 control	Parameter Number	136
	Access Rule	SET
	Data Type	BYTE
	Group	ZIP
	Units	–
	Minimum Value	0
	Maximum Value	0x3F
	Default Value	0x02

Bit								Function
7	6	5	4	3	2	1	0	
—	—	—	—	—	—	—	X	SecurityEnable
—	—	—	—	—	—	X	—	COSCnxn
—	—	—	—	—	X	—	—	PollCnxn
—	—	—	—	X	—	—	—	StrobeCnxn
—	—	—	X	—	—	—	—	MulticastPoll
—	—	X	—	—	—	—	—	FragmentedIO
X	X	—	—	—	—	—	—	Reserved

Zone4Control Enables/Disables options for Zone 4 control	Parameter Number	137
	Access Rule	SET
	Data Type	BYTE
	Group	ZIP
	Units	–
	Minimum Value	0
	Maximum Value	0x3F
	Default Value	0x02

Bit								Function
7	**6**	**5**	**4**	**3**	**2**	**1**	**0**	
—	—	—	—	—	—	—	X	SecurityEnable
—	—	—	—	—	—	X	—	COSCnxn
—	—	—	—	—	X	—	—	PollCnxn
—	—	—	—	X	—	—	—	StrobeCnxn
—	—	—	X	—	—	—	—	MulticastPoll
—	—	X	—	—	—	—	—	FragmentedIO
X	X	—	—	—	—	—	—	Reserved

Zone1Key Device Value Key for the device in Zone 1	Parameter Number	138
	Access Rule	SET
	Data Type	UINT
	Group	ZIP
	Units	–
	Minimum Value	0
	Maximum Value	65535
	Default Value	0

Zone2Key Device Value Key for the device in Zone 2	Parameter Number	139
	Access Rule	SET
	Data Type	UINT
	Group	ZIP
	Units	–
	Minimum Value	0
	Maximum Value	65535
	Default Value	0

Zone3Key Device Value Key for the device in Zone 3	Parameter Number	140
	Access Rule	SET
	Data Type	UINT
	Group	ZIP
	Units	–
	Minimum Value	0
	Maximum Value	65535
	Default Value	0

Zone4Key Device Value Key for the device in Zone 4	Parameter Number	141
	Access Rule	SET
	Data Type	UINT
	Group	ZIP
	Units	–
	Minimum Value	0
	Maximum Value	65535
	Default Value	0

DeviceValueKey Device Value Key for this device	Parameter Number	142
	Access Rule	SET
	Data Type	UINT
	Group	ZIP
	Units	–
	Minimum Value	0
	Maximum Value	65535
	Default Value	0

ZoneCtrlEnable Enables or disables this device's Zip functionality 0=Disable 1=Enable	Parameter Number	143
	Access Rule	SET
	Data Type	BOOL
	Group	ZIP
	Units	–
	Minimum Value	0
	Maximum Value	1
	Default Value	0

Bulletin 294D

Basic Status Group

OutputFreq This parameter provides the output frequency at motor terminals T1, T2, T3.	Parameter Number	1
	Access Rule	GET
	Data Type	UINT
	Group	Basic Status
	Units	x.x Hz
	Minimum Value	0
	Maximum Value	999.9
	Default Value	0

CommandFreq This parameter provides the commanded frequency even if the starter is not running.	Parameter Number	2
	Access Rule	GET
	Data Type	UINT
	Group	Basic Status
	Units	x.x Hz
	Minimum Value	0
	Maximum Value	999.9
	Default Value	0

OutputCurrent This parameter provides the output current at motor terminals T1, T2, T3.	Parameter Number	3
	Access Rule	GET
	Data Type	UINT
	Group	Basic Status
	Units	x.xx Amps
	Minimum Value	0
	Maximum Value	8.00
	Default Value	0

OutputVoltage This parameter provides the output voltage at motor terminals T1, T2, T3.	Parameter Number	4
	Access Rule	GET
	Data Type	UINT
	Group	Basic Status
	Units	x.xV AC
	Minimum Value	0
	Maximum Value	999.9
	Default Value	0

DCBusVoltage This parameter provides the present DC bus voltage level.	Parameter Number	5
	Access Rule	GET
	Data Type	UINT
	Group	Basic Status
	Units	V DC
	Minimum Value	0
	Maximum Value	1200
	Default Value	0

Starter Status This parameter provides the status of the starter.	Parameter Number	6
	Access Rule	GET
	Data Type	WORD
	Group	Basic Status
	Units	—
	Minimum Value	0
	Maximum Value	0xDFFF
	Default Value	0

Bit																**Function**
15	**14**	**13**	**12**	**11**	**10**	**9**	**8**	**7**	**6**	**5**	**4**	**3**	**2**	**1**	**0**	
—	—	—	—	—	—	—	—	—	—	—	—	—	—	—	X	TripPresent
—	—	—	—	—	—	—	—	—	—	—	—	—	—	X	—	WarningPresent
—	—	—	—	—	—	—	—	—	—	—	—	—	X	—	—	RunningForward
—	—	—	—	—	—	—	—	—	—	—	—	X	—	—	—	RunningReverse
—	—	—	—	—	—	—	—	—	—	—	X	—	—	—	—	Ready
—	—	—	—	—	—	—	—	—	—	X	—	—	—	—	—	NetControlStatus
—	—	—	—	—	—	—	—	—	X	—	—	—	—	—	—	NetRefStatus
—	—	—	—	—	—	—	—	X	—	—	—	—	—	—	—	AtReference
—	—	—	—	—	—	—	X	—	—	—	—	—	—	—	—	DLXEnabled
—	—	—	—	—	—	X	—	—	—	—	—	—	—	—	—	KeyPadAuto
—	—	—	—	—	X	—	—	—	—	—	—	—	—	—	—	KeyPadOff
—	—	—	—	X	—	—	—	—	—	—	—	—	—	—	—	KeyPadHand
—	—	—	X	—	—	—	—	—	—	—	—	—	—	—	—	KeyPadJogging
—	—	X	—	—	—	—	—	—	—	—	—	—	—	—	—	Reserved
—	X	—	—	—	—	—	—	—	—	—	—	—	—	—	—	DisconnectClosed
X	—	—	—	—	—	—	—	—	—	—	—	—	—	—	—	BrakeStatus

StarterCommand The parameter provides the command status of the starter.	Parameter Number	7
	Access Rule	GET
	Data Type	WORD
	Group	Basic Status
	Units	—
	Minimum Value	0
	Maximum Value	0xFF1F
	Default Value	0

Bit																Function
15	**14**	**13**	**12**	**11**	**10**	**9**	**8**	**7**	**6**	**5**	**4**	**3**	**2**	**1**	**0**	
—	—	—	—	—	—	—	—	—	—	—	—	—	—	—	X	RunningForward
—	—	—	—	—	—	—	—	—	—	—	—	—	—	X	—	RunningReverse
—	—	—	—	—	—	—	—	—	—	—	—	—	X	—	—	ResetFault
—	—	—	—	—	—	—	—	—	—	—	—	X	—	—	—	JogForward
—	—	—	—	—	—	—	—	—	—	—	X	—	—	—	—	JogReverse
—	—	—	—	—	—	—	—	X	X	X	—	—	—	—	—	Reserved
—	—	—	—	—	—	—	X	—	—	—	—	—	—	—	—	Out00
—	—	—	—	—	—	X	—	—	—	—	—	—	—	—	—	Out01
—	—	—	—	—	X	—	—	—	—	—	—	—	—	—	—	Out02
—	—	—	—	X	—	—	—	—	—	—	—	—	—	—	—	Out03
—	—	—	X	—	—	—	—	—	—	—	—	—	—	—	—	Out04
—	—	X	—	—	—	—	—	—	—	—	—	—	—	—	—	Out05
—	X	—	—	—	—	—	—	—	—	—	—	—	—	—	—	Accel2
X	—	—	—	—	—	—	—	—	—	—	—	—	—	—	—	Decel2

AuxIOStatus Status of the hardware input/output points.	Parameter Number	8
	Access Rule	GET
	Data Type	WORD
	Group	Basic Status
	Units	—
	Minimum Value	0
	Maximum Value	0x3F
	Default Value	0

Bit																Function:
15	14	13	12	11	10	9	8	7	6	5	4	3	2	1	0	
—	—	—	—	—	—	—	—	—	—	—	—	—	—	—	X	Pt00
—	—	—	—	—	—	—	—	—	—	—	—	—	—	X	—	Pt01
—	—	—	—	—	—	—	—	—	—	—	—	—	X	—	—	Pt02
—	—	—	—	—	—	—	—	—	—	—	—	X	—	—	—	Pt03
—	—	—	—	—	—	—	—	—	—	—	X	—	—	—	—	Pt04
—	—	—	—	—	—	—	—	—	—	X	—	—	—	—	—	Pt05
X	X	X	X	X	X	X	X	X	X	—	—	—	—	—	—	Reserved

NetworkStatus The parameter provides the status of the network connections.	Parameter Number	9
	Access Rule	GET
	Data Type	WORD
	Group	Basic Status
	Units	—
	Minimum Value	0
	Maximum Value	0xDF
	Default Value	0

Bit																Function:
15	14	13	12	11	10	9	8	7	6	5	4	3	2	1	0	
—	—	—	—	—	—	—	—	—	—	—	—	—	—	—	X	ExplicitCnxn
—	—	—	—	—	—	—	—	—	—	—	—	—	—	X	—	IOConnection
—	—	—	—	—	—	—	—	—	—	—	—	—	X	—	—	ExplicitCnxnFlt
—	—	—	—	—	—	—	—	—	—	—	—	X	—	—	—	IOCnxnFault
—	—	—	—	—	—	—	—	—	—	—	X	—	—	—	—	IOCnxnIdle
—	—	—	—	—	—	—	—	X	X	X	—	—	—	—	—	Reserved
—	—	—	—	—	—	—	X	—	—	—	—	—	—	—	—	ZIP1Cnxn
—	—	—	—	—	—	X	—	—	—	—	—	—	—	—	—	ZIP1CnxnFlt
—	—	—	—	—	X	—	—	—	—	—	—	—	—	—	—	ZIP2Cnxn
—	—	—	—	X	—	—	—	—	—	—	—	—	—	—	—	ZIP2CnxnFlt
—	—	—	X	—	—	—	—	—	—	—	—	—	—	—	—	ZIP3Cnxn
—	—	X	—	—	—	—	—	—	—	—	—	—	—	—	—	ZIP3CnxnFlt
—	X	—	—	—	—	—	—	—	—	—	—	—	—	—	—	ZIP4Cnxn
X	—	—	—	—	—	—	—	—	—	—	—	—	—	—	—	ZIP4CnxnFlt

DLXControlStatus The parameter provides the DeviceLogix Control Status. 0 = Controlled in Logix Programs 1 = Controlled in local DLX programs.	Parameter Number	10
	Access Rule	GET
	Data Type	UINT
	Group	Basic Status
	Units	—
	Minimum Value	0
	Maximum Value	0x1FFF
	Default Value	0

Bit																**Function:**
15	**14**	**13**	**12**	**11**	**10**	**9**	**8**	**7**	**6**	**5**	**4**	**3**	**2**	**1**	**0**	
—	—	—	—	—	—	—	—	—	—	—	—	—	—	—	X	RunForward
—	—	—	—	—	—	—	—	—	—	—	—	—	—	X	—	RunReverse
—	—	—	—	—	—	—	—	—	—	—	—	—	X	—	—	Out00
—	—	—	—	—	—	—	—	—	—	—	—	X	—	—	—	Out01
—	—	—	—	—	—	—	—	—	—	—	X	—	—	—	—	Out02
—	—	—	—	—	—	—	—	—	—	X	—	—	—	—	—	Out03
—	—	—	—	—	—	—	—	—	X	—	—	—	—	—	—	Out04
—	—	—	—	—	—	—	—	X	—	—	—	—	—	—	—	Out05
—	—	—	—	—	—	—	X		—	—	—	—	—	—	—	JogForward
—	—	—	—	—	—	X	—	—	—	—	—	—	—	—	—	JogReverse
—	—	—	—	—	X	—	—	—	—	—	—	—	—	—	—	Accel2
—	—	—	—	X	—	—	—	—	—	—	—	—	—	—	—	Decel2
—	—	—	X	—	—	—	—	—	—	—	—	—	—	—	—	Command Freq
X	X	X	—	—	—	—	—	—	—	—	—	—	—	—	—	Reserved

OutputSourceV (IPS) [SwitchedVolts] This parameter determines the incoming switched control voltage across terminals A1…A2. (IPS) available voltage on User Output Pin 4 for all I/O points.	Parameter Number	11
	Access Rule	GET
	Data Type	UINT
	Group	Basic Status
	Units	x.xx Volts
	Minimum Value	0
	Maximum Value	65535
	Default Value	0

SensorSourceV (IPS) [UnswitchedVolts] This parameter determines the incoming unswitched control voltage across terminals A2…A3. (IPS) available voltage on input Sensor Source Pin 1 for all I/O points.	Parameter Number	12
	Access Rule	GET
	Data Type	UINT
	Group	Basic Status
	Units	x.xx Volts
	Minimum Value	0
	Maximum Value	65535
	Default Value	0

InternalFanRPM This parameter determines the Revolutions Per Minute (RPM) of the internal cooling fan.	Parameter Number	13
	Access Rule	GET
	Data Type	UINT
	Group	Basic Status
	Units	RPM
	Minimum Value	0
	Maximum Value	65535
	Default Value	0

ElapsedRunTime This parameter determines the accumulated run time displayed in 10 hour increments. 1 = 10 Hrs	Parameter Number	14
	Access Rule	GET
	Data Type	UINT
	Group	Basic Status
	Units	—
	Minimum Value	0
	Maximum Value	9999
	Default Value	0

DriveTemperature This parameter determines the present operating temperature of the power section.	Parameter Number	15
	Access Rule	GET
	Data Type	UINT
	Group	Basic Status
	Units	°C
	Minimum Value	0
	Maximum Value	9999
	Default Value	0

Trip Status Group

TripStatus This parameter provides the fault condition that caused any current trip.	Parameter Number	16
	Access Rule	GET
	Data Type	WORD
	Group	Trip Status
	Units	—
	Minimum Value	0
	Maximum Value	0xFFFF
	Default Value	0

Bit																**Function**
15	**14**	**13**	**12**	**11**	**10**	**9**	**8**	**7**	**6**	**5**	**4**	**3**	**2**	**1**	**0**	
—	—	—	—	—	—	—	—	—	—	—	—	—	—	—	X	OverloadTrip
—	—	—	—	—	—	—	—	—	—	—	—	—	—	X	—	PhaseShortTrip
—	—	—	—	—	—	—	—	—	—	—	—	—	X	—	—	UnderPowerTrip
—	—	—	—	—	—	—	—	—	—	—	—	X	—	—	—	SensorShortTrip
—	—	—	—	—	—	—	—	—	—	—	X	—	—	—	—	OverCurrentTrip
—	—	—	—	—	—	—	—	—	—	X	—	—	—	—	—	NonVolMemoryTrip
—	—	—	—	—	—	—	—	—	X	—	—	—	—	—	—	ParamSyncTrip
—	—	—	—	—	—	—	—	X	—	—	—	—	—	—	—	DCBusTrip/ OpenDisconnect
—	—	—	—	—	—	—	X	—	—	—	—	—	—	—	—	StallTrip
—	—	—	—	—	—	X	—	—	—	—	—	—	—	—	—	OverTemperature
—	—	—	—	—	X	—	—	—	—	—	—	—	—	—	—	GroundFault
—	—	—	—	X	—	—	—	—	—	—	—	—	—	—	—	RestartRetries
—	—	—	X	—	—	—	—	—	—	—	—	—	—	—	—	DriveHdwFault
—	—	X	—	—	—	—	—	—	—	—	—	—	—	—	—	OutputShortTrip
—	X	—	—	—	—	—	—	—	—	—	—	—	—	—	—	UserDefinedTrip
X	—	—	—	—	—	—	—	—	—	—	—	—	—	—	—	HardwareFltTrip

WarningStatus This parameter provides the current warning condition.	Parameter Number	17
	Access Rule	GET
	Data Type	WORD
	Group	Trip Status
	Units	—
	Minimum Value	0
	Maximum Value	0xC044
	Default Value	0

Bit																Function
15	14	13	12	11	10	9	8	7	6	5	4	3	2	1	0	
—	—	—	—	—	—	—	—	—	—	—	—	—	—	X	X	Reserved
—	—	—	—	—	—	—	—	—	—	—	—	—	X	—	—	UnderPowerWarn
—	—	—	—	—	—	—	—	—	—	X	X	X	—	—	—	Reserved
—	—	—	—	—	—	—	—	—	X	—	—	—	—	—	—	DriveParamInit
—	—	X	—	X	X	X	X	X	—	—	—	—	—	—	—	Reserved
—	—	—	X	—	—	—	—	—	—	—	—	—	—	—	—	FanWarning
—	X	—	—	—	—	—	—	—	—	—	—	—	—	—	—	DNetPwrWarn
X	—	—	—	—	—	—	—	—	—	—	—	—	—	—	—	ConfigWarning

TripLog0 This parameter provides the last trip to occur.	Parameter Number	18
	Access Rule	GET
	Data Type	UINT
	Group	Trip Status
	Units	—
	Minimum Value	0
	Maximum Value	75
	Default Value	0

TripLog1 This parameter provides the second last trip to occur.	Parameter Number	19
	Access Rule	GET
	Data Type	UINT
	Group	Trip Status
	Units	—
	Minimum Value	0
	Maximum Value	75
	Default Value	0

TripLog2 This parameter provides the third last trip to occur.	Parameter Number	20
	Access Rule	GET
	Data Type	UINT
	Group	Trip Status
	Units	—
	Minimum Value	0
	Maximum Value	75
	Default Value	0

TripLog3 This parameter provides the fourth last trip to occur.	Parameter Number	21
	Access Rule	GET
	Data Type	UINT
	Group	Trip Status
	Units	—
	Minimum Value	0
	Maximum Value	75
	Default Value	0

TripLog4 This parameter provides the fifth last trip to occur.	Parameter Number	22
	Access Rule	GET
	Data Type	UINT
	Group	Trip Status
	Units	—
	Minimum Value	0
	Maximum Value	75
	Default Value	0

SnapShotOutFreq This parameter provides a snapshot of output frequency at time of last trip.	Parameter Number	23
	Access Rule	GET
	Data Type	UINT
	Group	Trip Status
	Units	x.x Hz
	Minimum Value	0
	Maximum Value	999.9
	Default Value	0

SnapShotOutAmps This parameter provides a snapshot of output current at time of last trip.	Parameter Number	24
	Access Rule	GET
	Data Type	UINT
	Group	Trip Status
	Units	x.xx Amps
	Minimum Value	0
	Maximum Value	4.60
	Default Value	0

SnapShotOutVolts This parameter provides a snapshot of output voltage at time of last trip.	Parameter Number	25
	Access Rule	GET
	Data Type	UINT
	Group	Trip Status
	Units	x.x V AC
	Minimum Value	0
	Maximum Value	999.9
	Default Value	0

SnapShotBusVolts This parameter provides a snapshot of DC bus voltage level at time of last trip.	Parameter Number	26
	Access Rule	GET
	Data Type	UINT
	Group	Trip Status
	Units	V DC
	Minimum Value	0
	Maximum Value	1200
	Default Value	0

SnapShotDrvTemp This parameter provides a snapshot of operating temperature at time of last trip.	Parameter Number	27
	Access Rule	GET
	Data Type	UINT
	Group	Trip Status
	Units	°C
	Minimum Value	0
	Maximum Value	9999
	Default Value	0

Motor and Control Group

MotorNPVolts O Stop drive before changing this parameter. Set to the motor nameplate rated voltage.	Parameter Number	28
	Access Rule	GET/SET
	Data Type	UINT
	Group	Motor and Control
	Units	V AC
	Minimum Value	35
	Maximum Value	460
	Default Value	460

MotorNPHertz	Parameter Number	29
O Stop drive before changing this parameter.	Access Rule	GET/SET
	Data Type	UINT
Set to the motor nameplate rated frequency.	Group	Motor and Control
	Units	Hz
	Minimum Value	10
	Maximum Value	400
	Default Value	60

MotorOLCurrent				Parameter Number	30
Set to the maximum allowable motor current.				Related Parameter	31, 80, 82…83
				Access Rule	GET/SET
				Data Type	UINT
				Group	Motor and Control
Cat. No.	**Hp (kW)**	**Min Amps**	**Default Amps**	Units	x.x Amps
294_FD1P5	0.5 (0.4)	0	1.5	Minimum Value	0
294_FD2P5	1.0 (0.75)	0	2.5	Maximum Value	Cat. No. Dependent
294_FD4P2	2.0 (1.5)	0	3.6	Default Value	Cat. No. Max Output

CurrentLimit			Parameter Number	31
Maximum output current allowed before current limiting occurs			Related Parameters	
			Access Rule	GET/SET
			Data Type	UINT
			Group	Motor and Control
Cat. No.	**Hp (kW)**		Units	x.x Amps
294_FD1P5	0.5 Hp	Min = 0; Max = 2.7; Default = 2.2	Minimum Value	0
294_FD2P5	1.0 Hp	Min = 0; Max = 4.5; Default = 3.7	Maximum Value	Cat. No. Dependent
294_FD4P2	2.0 Hp	Min = 0; Max = 7.5; Default = 6.3	Default Value	Cat. No. Dependent

StopMode	Parameter Number	32
Valid Stop Mode for the Bulletin 294E ArmorStart LT are the following: 0 = **RampToStop,** "Stop" command clears active fault 1 = **Coast to Stop,** "Stop" command clears active fault 2 = **DCBrake,** DC Injection Braking Stop, "Stop" command clears active fault 3 = **DCBrakeAuto,** DC Injection Stop with Auto Shutoff Standard DC Injection Braking for value set in Parameter 75 (DC Brake Time) or Drive shuts off if current limit is exceeded.	Related Parameters	
	Access Rule	GET/SET
	Data Type	UINT
	Group	Motor and Control
	Units	—
	Minimum Value	0
	Maximum Value	3
	Default Value	0

Speed Control Group

SpeedReference		
Sets the source of the speed reference: 0 = Logix (Network or DeviceLogix) 1 = InternalFreq	Parameter Number	33
	Related Parameters	1, 2, 36, 37, 72
	Access Rule	GET/SET
	Data Type	UINT
	Group	Speed Control
	Units	—
	Minimum Value	0
	Maximum Value	2
	Default Value	0

MinimumFreq		
Sets the lowest frequency the drive will output continuously.	Parameter Number	34
	Related Parameter	1, 2, 35
	Access Rule	GET/SET
	Data Type	UINT
	Group	Speed Control
	Units	x.x Hz
	Minimum Value	0.0
	Maximum Value	400.0
	Default Value	0.0

MaximumFreq		
O Stop drive before changing this parameter. Sets the highest frequency the drive will output.	Parameter Number	35
	Related Parameter	1, 2, 34, 35, 139
	Access Rule	GET/SET
	Data Type	UINT
	Group	Speed Control
	Units	Hz
	Minimum Value	0.0
	Maximum Value	400
	Default Value	60

AccelTime1		
Sets the rate of acceleration for all speed increases. $\frac{\text{Maximum Freq}}{\text{Accel Time}} = \text{Accel Rate}$ 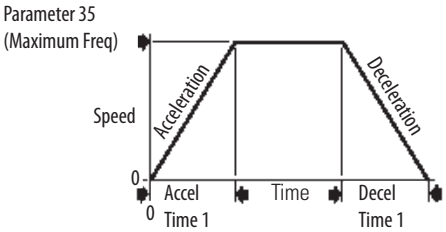 	Parameter Number	36
	Related Parameters	33, 37
	Access Rule	GET/SET
	Data Type	UINT
	Group	Speed Control
	Units	x.x secs
	Minimum Value	0.0
	Maximum Value	600.0
	Default Value	10.0

DecelTime1	Parameter Number	37
Sets the rate of deceleration for all speed decreases.	Related Parameters	33, 36
$\frac{\text{Maximum Freq}}{\text{Decel Time}} = \text{Decel Rate}$	Access Rule	GET/SET
	Data Type	UINT
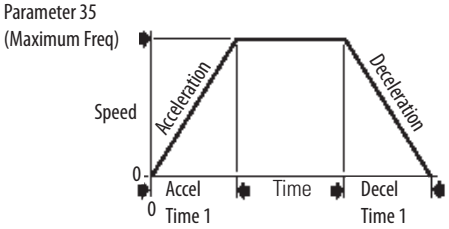	Group	Speed Control
	Units	x.x secs
	Minimum Value	0.1
	Maximum Value	600.0
	Default Value	10.0

SCurvePercent	Parameter Number	38
Sets the percentage of acceleration or deceleration time that is applied to ramp as S Curve. Time is added, half at the beginning and half at the end of the ramp.	Access Rule	GET/SET
	Data Type	UINT
	Group	Speed Control
	Units	Percentage
	Minimum Value	0
	Maximum Value	100
	Default Value	0

Figure 35 - S Curve

Example:
Accel Time = 10 Seconds
S Curve Setting = 50%
S Curve Time = 10 x 0.5 = 5 Seconds
Total Time = 10 + 5 = 15 Seconds

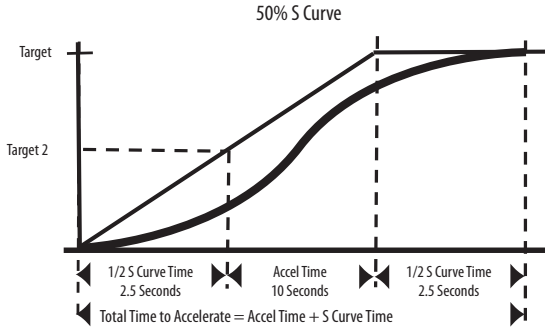

JogFrequency	Parameter Number	39
Sets the output frequency when the jog command is issued.	Related Parameters	35, 40
	Access Rule	GET/SET
	Data Type	UINT
	Group	Drive Advanced Setup
	Units	x.x Hz
	Minimum Value	0.0
	Maximum Value	400.0
	Default Value	10.0

JogAccelDecel Sets the acceleration and deceleration time when a jog command is issued.	Parameter Number	40
	Related Parameters	39
	Access Rule	GET/SET
	Data Type	UINT
	Group	Drive Advanced Setup
	Units	x.x secs
	Minimum Value	0.1
	Maximum Value	600.0
	Default Value	10.0

Starter Protection Group

ProtFltResetMode This parameter configures the Protection Fault reset mode. 0 = Manual 1 = Automatic	Parameter Number	41
	Access Rule	GET/SET
	Data Type	BOOL
	Group	Starter Protection
	Units	—
	Minimum Value	0
	Maximum Value	1
	Default Value	0

ProtectFltEnable This parameter enables the Protection Fault by setting the bit to 1.	Parameter Number	42
	Access Rule	GET/SET
	Data Type	WORD
	Group	Starter Protection
	Units	—
	Minimum Value	0
	Maximum Value	0xFFFF
	Default Value	0xBFFF

Bit																Function
15	14	13	12	11	10	9	8	7	6	5	4	3	2	1	0	
—	—	—	—	—	—	—	—	—	—	—	—	—	—	—	X	OverloadTrip
—	—	—	—	—	—	—	—	—	—	—	—	—	—	X	—	PhaseShortTrip
—	—	—	—	—	—	—	—	—	—	—	—	—	X	—	—	UnderPowerTrip
—	—	—	—	—	—	—	—	—	—	—	—	X	—	—	—	SensorShortTrip
—	—	—	—	—	—	—	—	—	—	—	X	—	—	—	—	OverCurrentTrip
—	—	—	—	—	—	—	—	—	—	X	—	—	—	—	—	NonVolMemoryTrip
—	—	—	—	—	—	—	—	—	X	—	—	—	—	—	—	ParamSyncTrip
—	—	—	—	—	—	—	—	X	—	—	—	—	—	—	—	DCBusTrip/ OpenDisconnect
—	—	—	—	—	—	—	X	—	—	—	—	—	—	—	—	StallTrip
—	—	—	—	—	—	X	—	—	—	—	—	—	—	—	—	OverTemperature
—	—	—	—	—	X	—	—	—	—	—	—	—	—	—	—	GroundFault
—	—	—	—	X	—	—	—	—	—	—	—	—	—	—	—	RestartRetries
—	—	—	X	—	—	—	—	—	—	—	—	—	—	—	—	DriveHdwFault
—	—	X	—	—	—	—	—	—	—	—	—	—	—	—	—	OutputShortTrip
—	X	—	—	—	—	—	—	—	—	—	—	—	—	—	—	UserDefinedTrip
X	—	—	—	—	—	—	—	—	—	—	—	—	—	—	—	HardwareFltTrip

The functions highlighted are enabled by default

WarningEnable	Parameter Number	43
This parameter enables a warning by setting the bit to 1.	Access Rule	GET/SET
	Data Type	WORD
	Group	Starter Protection
	Units	—
	Minimum Value	0
	Maximum Value	0xC044
	Default Value	0

Bit																Function
15	14	13	12	11	10	9	8	7	6	5	4	3	2	1	0	
—	—	—	—	—	—	—	—	—	—	—	—	—	—	X	X	Reserved
—	—	—	—	—	—	—	—	—	—	—	—	—	X	—	—	UnderPowerWarn
—	—	—	—	—	—	—	—	—	—	X	X	X	—	—	—	Reserved
—	—	—	—	—	—	—	—	—	X	—	—	—	—	—	—	DriveParamInit
—	—	X	—	X	X	X	X	X	—	—	—	—	—	—	—	Reserved
—	—	—	X	—	—	—	—	—	—	—	—	—	—	—	—	FanWarning
—	X	—	—	—	—	—	—	—	—	—	—	—	—	—	—	DNetPwrWarn
X	—	—	—	—	—	—	—	—	—	—	—	—	—	—	—	ConfigWarning

ProtectFltReset This parameter resets a Protection Fault by setting the bit to 1. 0 = NoAction 0 > 1 = ResetFault	Parameter Number	44
	Access Rule	GET/SET
	Data Type	BOOL
	Group	Starter Protection
	Units	—
	Minimum Value	0
	Maximum Value	1
	Default Value	0

RunNetFltAction This parameter in conjunction with Parameter 46 (RunNetFltValue) defines how the starter will respond when a network fault occurs as determined. 0 = GoToFaultValue 1 = HoldLastState	Parameter Number	45
	Access Rule	GET/SET
	Data Type	BOOL
	Group	Starter Protection
	Units	—
	Minimum Value	0
	Maximum Value	1
	Default Value	0

RunNetFltValue This parameter determines how the starter will be commanded in the event of a fault. State the starter will go to on a NetFlt if Parameter 45 (RunNetFltAction) = 1 (GotoFault-Value). 0 = OFF 1 = ON	Parameter Number	46
	Access Rule	GET/SET
	Data Type	BOOL
	Group	Starter Protection
	Units	—
	Minimum Value	0
	Maximum Value	1
	Default Value	0

RunNetIdlAction This parameter in conjunction with Parameter 48 (RunNetIdlValue) defines how the starter will respond when a network is idle as determined by Parameter 48. 0 = GoToIdleValue 1 = HoldLastState	Parameter Number	47
	Access Rule	GET/SET
	Data Type	BOOL
	Group	Starter Protection
	Units	—
	Minimum Value	0
	Maximum Value	1
	Default Value	0

RunNetIdlValue This parameter determines the state that starter assumes when the network is idle and Parameter 47 (RunNetIdlAction) is set to 1. 0 = OFF 1 = ON	Parameter Number	48
	Access Rule	GET
	Data Type	BOOL
	Group	Starter Protection
	Units	—
	Minimum Value	0
	Maximum Value	0x3F
	Default Value	0

User I/O Configuration Group

IOPointConfigure This parameter determines the point that is configured: 0 = Input 1 = Output	Parameter Number	49
	Access Rule	GET/SET
	Data Type	WORD
	Group	User I/O Config.
	Units	—
	Minimum Value	0
	Maximum Value	0x3F
	Default Value	0

Bit						Function
5	**4**	**3**	**2**	**1**	**0**	
—	—	—	—	—	X	Pt00
—	—	—	—	X	—	Pt01
—	—	—	X	—	—	Pt02
—	—	X	—	—	—	Pt03
—	X	—	—	—	—	Pt04
X	—	—	—	—	—	Pt05

FilterOffOn This parameter determines the input (which must be present for this time) before being reported ON.	Parameter Number	50
	Access Rule	GET/SET
	Data Type	USINT
	Group	User I/O Config.
	Units	msecs
	Minimum Value	0
	Maximum Value	64
	Default Value	0

FilterOnOff This parameter determines the input (which must be absent for this time) before being reported OFF.	Parameter Number	51
	Access Rule	GET/SET
	Data Type	USINT
	Group	User I/O Config.
	Units	msecs
	Minimum Value	0
	Maximum Value	64
	Default Value	0

OutProtFltState This parameter in conjunction with Parameter 53 (OutProtFltValue) defines how the starter outputs will respond when a fault occurs. 0 = GoToPrFltValue 1 = IgnorePrFlt	Parameter Number	52
	Access Rule	GET/SET
	Data Type	BOOL
	Group	User I/O Config.
	Units	—
	Minimum Value	0
	Maximum Value	1
	Default Value	0

OutProtFltValue This parameter determines how the starter outputs will be commanded in the event of a protection fault if Parameter 52 (OutProtFltState) = 0. 0 = OFF 1 = ON	Parameter Number	53
	Access Rule	GET/SET
	Data Type	BOOL
	Group	User I/O Config.
	Units	—
	Minimum Value	0
	Maximum Value	1
	Default Value	0

OutNetFaultState This parameter in conjunction with Parameter 55 (OutNetFaultValue) defines how the starter outputs will respond on an Ethernet fault. 0 = GoToFaultValue 1 = HoldLastState	Parameter Number	54
	Access Rule	GET/SET
	Data Type	BOOL
	Group	User I/O Config.
	Units	—
	Minimum Value	0
	Maximum Value	1
	Default Value	0

OutNetFaultValue	Parameter Number	55
This parameter determines the state that starter outputs when an Ethernet fault occurs and Parameter 54 (OutNetFaultState) is set to 0. 0 = OFF 1 = ON	Access Rule	GET
	Data Type	BOOL
	Group	User I/O Config.
	Units	—
	Minimum Value	0
	Maximum Value	1
	Default Value	0

OutNetIdleState	Parameter Number	56
This parameter in conjunction with Parameter 57 (OutNetIdleValue) defines how the starter outputs will respond when a network is idle. 0 = GoToIdleValue 1 = HoldLastState	Access Rule	GET/SET
	Data Type	BOOL
	Group	User I/O Config.
	Units	—
	Minimum Value	0
	Maximum Value	1
	Default Value	0

OutNetIdleValue	Parameter Number	57
This parameter determines the state that starter outputs assumes when the network is idle and Parameter 56 (OutNetIdleState) is set to 0. 0 = OFF 1 = ON	Access Rule	GET
	Data Type	BOOL
	Group	User I/O Config.
	Units	—
	Minimum Value	0
	Maximum Value	1
	Default Value	0

Input00Function	Parameter Number	58
This parameter determines the special function for User Input 0: 0 = NoFunction 1 = FaultReset 2 = MotionDisable❶ 3 = ForceSnapShot 4 = UserFault 5 = BrakeRelease❶ ❶ These choices are level sensitive. All others are edge sensitive	Access Rule	GET/SET
	Data Type	USINT
	Group	User I/O Config.
	Units	—
	Minimum Value	0
	Maximum Value	5
	Default Value	0

Input01Function	Parameter Number	59
This parameter determines the special function for User Input 1: 0 = NoFunction 1 = FaultReset 2 = MotionDisable❶ 3 = ForceSnapShot 4 = UserFault 5 = BrakeRelease❶ ❶ These choices are level sensitive. All others are edge sensitive	Access Rule	GET/SET
	Data Type	USINT
	Group	User I/O Config.
	Units	—
	Minimum Value	0
	Maximum Value	5
	Default Value	0

Input02Function	Parameter Number	60
This parameter determines the special function for User Input 2: 0 = NoFunction 1 = FaultReset 2 = MotionDisable❶ 3 = ForceSnapShot 4 = UserFault 5 = BrakeRelease❶ ❶ These choices are level sensitive. All others are edge sensitive	Access Rule	GET/SET
	Data Type	USINT
	Group	User I/O Config.
	Units	—
	Minimum Value	0
	Maximum Value	5
	Default Value	0

Input03Function	Parameter Number	61
This parameter determines the special function for User Input 3: 0 = NoFunction 1 = FaultReset 2 = MotionDisable❶ 3 = ForceSnapShot 4 = UserFault 5 = BrakeRelease*❶ ❶ These choices are level sensitive. All others are edge sensitive	Access Rule	GET/SET
	Data Type	USINT
	Group	User I/O Config.
	Units	—
	Minimum Value	0
	Maximum Value	5
	Default Value	0

Input04Function	Parameter Number	62
This parameter determines the special function for User Input 4: 0 = NoFunction 1 = FaultReset 2 = MotionDisable❶ 3 = ForceSnapShot 4 = UserFault 5 = BrakeRelease❶ ❶ These choices are level sensitive. All others are edge sensitive	Access Rule	GET/SET
	Data Type	USINT
	Group	User I/O Config.
	Units	—
	Minimum Value	0
	Maximum Value	5
	Default Value	0

Input05Function This parameter determines the special function for User Input 5: 0 = NoFunction 1 = FaultReset 2 = MotionDisable❶ 3 = ForceSnapShot 4 = UserFault 5 = BrakeRelease❶ ❶ These choices are level sensitive. All others are edge sensitive	Parameter Number	63
	Access Rule	GET/SET
	Data Type	USINT
	Group	User I/O Config.
	Units	—
	Minimum Value	0
	Maximum Value	5
	Default Value	0

Miscellaneous Configuration Group

Network0verride This parameter allows for the local logic to override a Network fault. 0 = Disable 1 = Enable	Parameter Number	64
	Access Rule	GET/SET
	Data Type	BOOL
	Group	Misc. Config.
	Units	—
	Minimum Value	0
	Maximum Value	1
	Default Value	0

Comms0verride This parameter allows for local logic to override an I/O connection timeout. 0 = Disable 1 = Enable	Parameter Number	65
	Access Rule	GET/SET
	Data Type	BOOL
	Group	Misc. Config.
	Units	—
	Minimum Value	0
	Maximum Value	1
	Default Value	0

KeypadMode This parameter selects if the keypad operation is maintained or momentary. 0 = Momentary 1 = Maintained	Parameter Number	66
	Access Rule	GET/SET
	Data Type	BOOL
	Group	Misc. Config.
	Units	—
	Minimum Value	0
	Maximum Value	1
	Default Value	0

KeypadDisable	Parameter Number	67
This parameter disables all keypad function except for the "OFF" and "RESET" buttons. 0 = KeypadEnabled 1 = KeypadDisabled	Access Rule	GET/SET
	Data Type	BOOL
	Group	Misc. Config.
	Units	—
	Minimum Value	0
	Maximum Value	1
	Default Value	0

SetToDefaults	Parameter Number	68
This parameter if set to "1" will set the device to the factory defaults. 0 = NoAction 1 = SetToDefaults	Access Rule	GET/SET
	Data Type	BOOL
	Group	Misc. Config.
	Units	—
	Minimum Value	0
	Maximum Value	1
	Default Value	0

Advanced Configuration

AccelTime2	Parameter Number	69
When active, sets the rate of acceleration for all speed increases except for jog. $\frac{\text{Maximum Freq}}{\text{Accel Time}} = \text{Accel Rate}$ 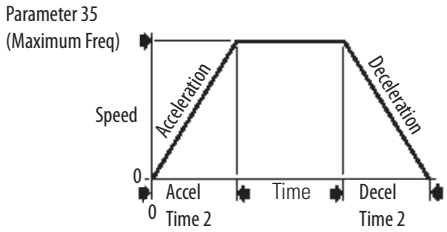 	Related Parameters	36
	Access Rule	GET/SET
	Data Type	UINT
	Group	Advanced Config.
	Units	x.x secs
	Minimum Value	0.0
	Maximum Value	600.0
	Default Value	20.0

DecelTime2		
When active, sets the rate of deceleration for all speed decreases except for jog. $\frac{\text{Maximum Freq}}{\text{Decel Time}} = \text{Decel Rate}$ 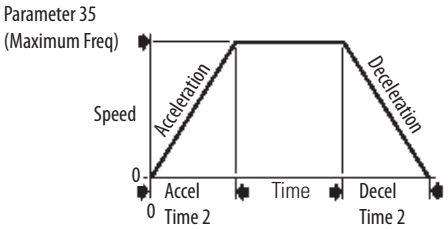	Parameter Number	70
	Related Parameters	37
	Access Rule	GET/SET
	Data Type	UINT
	Group	Advanced Config.
	Units	x.x secs
	Minimum Value	0.0
	Maximum Value	600.0
	Default Value	20.0

MotorOLRetention		
Enables/disables the Motor overload Retention function. When Enabled, the value held in the motor overload counter is saved at power-down and restored at power-up. A change to this parameter setting resets the counter. 0 = Disabled (Default) 1 = Enabled	Parameter Number	71
	Access Rule	GET/SET
	Data Type	UINT
	Group	Advanced Config.
	Units	—
	Minimum Value	0
	Maximum Value	1
	Default Value	0

InternalFreq		
Provide the frequency command to drive when Parameter 33 (Speed-Reference) = 1 (InternalFreq). When enabled, this parameter will change the frequency command in real time.	Parameter Number	72
	Related Parameters	33
	Access Rule	GET/SET
	Data Type	UINT
	Group	Advanced Config.
	Units	x.x Hz
	Minimum Value	0.0
	Maximum Value	400.0
	Default Value	60.0

SkipFrequency Sets the frequency at which the drive will not operate.	Parameter Number	73
	Related Parameters	74
	Access Rule	GET/SET
	Data Type	UINT
	Group	Advanced Config.
	Units	Hz
	Minimum Value	0
	Maximum Value	400 Hz
	Default Value	0 Hz

SkipFrqBand Determines the band width around Parameter 73 (SkipFrequency). Parameter 74 (SkipFreqBand) is split applying 1/2 above and 1/2 below the actual skip frequency. A setting of 0.0 disables this parameter.	Parameter Number	74
	Related Parameters	73
	Access Rule	GET/SET
	Data Type	UINT
	Group	Advanced Config.
	Units	x.x Hz
	Minimum Value	0.0 Hz
	Maximum Value	30.0 Hz
	Default Value	0.0 Hz

Figure 36 - Skip Frequency Band

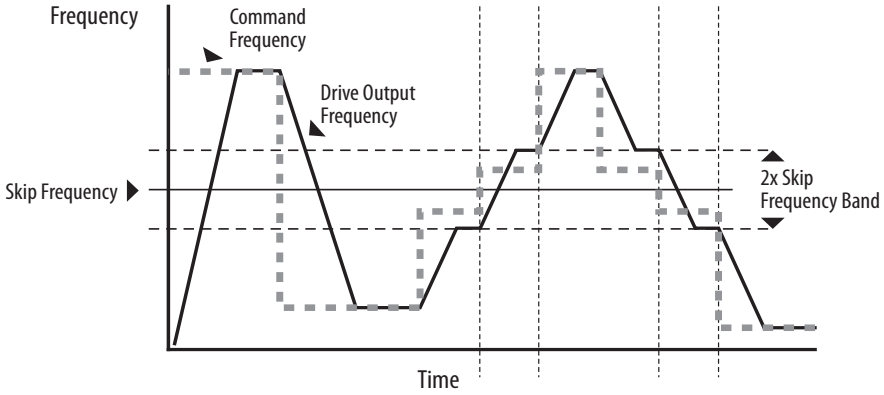

DCBrakeTime Sets the length of time that DC brake current is injected into the motor. Refer to Parameter 76 (DCBrakeLevel).	Parameter Number	75
	Related Parameters	32, 76
	Access Rule	GET/SET
	Data Type	UINT
	Group	Advanced Config.
	Units	x.x secs
	Minimum Value	0.0
	Maximum Value	99.9 (Setting of 99.9 = Continuous)
	Default Value	0.0

DCBrakeLevel Defines the maximum DC brake current, in amps, applied to the motor when Parameter 32 (StopMode) is set to either 0 = RAMP or 2 = DC BRAKE.	Parameter Number	76
	Related Parameters	32, 75
	Access Rule	GET/SET
	Data Type	UINT
	Group	Advanced Config.
	Units	x.x Amps
	Minimum Value	0.0
For 0.5 Hp units – Min = 0; Max = 2.7; Default = .1 For 1.0 Hp units – Min = 0; Max = 4.5; Default = .1 For 2.0Hp units – Min = 0; Max = 7.5; Default = .2	Maximum Value	Hp Dependant
	Default Value	Hp Dependant

ATTENTION:

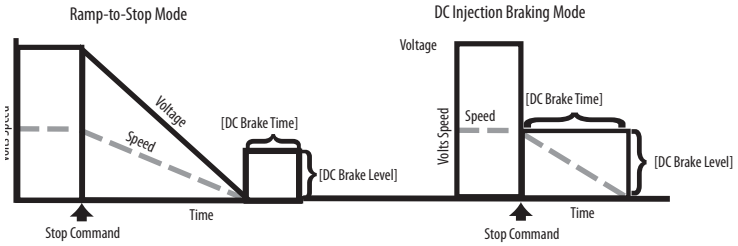

- If a hazard of injury due to movement of equipment or material exists, an auxiliary mechanical braking device must be used.
- This feature should not be used with synchronous or permanent magnet motors. Motors may be demagnetized during braking.

ReverseDisable	Parameter Number	77
O Stop drive before changing this parameter.	Related Parameters	—
	Access Rule	GET/SET
Enables/disables the function that allows the direction of the motor rotation to be changed. 0 = Enabled 1 = Disabled	Data Type	UINT
	Group	Advanced Config.
	Units	—
	Minimum Value	0
	Maximum Value	1
	Default Value	0

FlyingStartEn	Parameter Number	78
Sets the condition that allows the drive to reconnect to a spinning motor at actual RPM. 0 = Disabled 1 = Enabled	Access Rule	GET/SET
	Data Type	UINT
	Group	Advanced Config.
	Units	—
	Minimum Value	0
	Maximum Value	1
	Default Value	0

Compensation	Parameter Number	79
Enables/disables correction options that may improve problems with motor instability, 0 = Disabled 1 = Electrical (Default) Some drive/motor combinations have inherent instabilities which are exhibited as non-sinusoidal motor currents. This setting attempts to correct this condition 2 = Mechanical Some motor/load combinations have mechanical resonances which can be excited by the drive current regulator. This setting slows down the current regulator response and attempts to correct this condition. 3 = Both	Access Rule	GET/SET
	Data Type	UINT
	Group	Advanced Config.
	Units	—
	Minimum Value	0
	Maximum Value	3
	Default Value	1

SlipHertzAtFLA Compensates for the inherent slip in an induction motor. This frequency is added to the commanded output frequency based on motor current.	Parameter Number	80
	Related Parameters	30
	Access Rule	GET/SET
	Data Type	UINT
	Group	Advanced Config.
	Units	x.x Hz
	Minimum Value	0.0 Hz
	Maximum Value	10.0 Hz
	Default Value	2.0 Hz

BusRegulateMode Controls the operation of the drive voltage regulation, which is normally operational at deceleration or when the bus voltage rises. 0 = Disable 1 = Enabled	Parameter Number	81
	Related Parameters	—
	Access Rule	GET/SET
	Data Type	UINT
	Group	Advanced Config.
	Units	—
	Minimum Value	0
	Maximum Value	1
	Default Value	0

ATTENTION: The bus regulator mode function is extremely useful for preventing nuisance overvoltage faults resulting from aggressive decelerations, overhauling loads, and eccentric loads. However, it can also cause either of the following two conditions to occur.

1. Fast positive changes in input voltage or imbalanced input voltages can cause uncommanded positive speed changes;
2. Actual deceleration times can be longer than commanded deceleration times. However, a "Stall Fault" is generated if the drive remains in this state for 1 minute. If this condition is unacceptable, the bus regulator must be disabled.

MotorOLSelect Drive provides Class 10 motor overload protection. Sets the derating factor for I^2T motor overload function. 0 = NoDerating 1 = MinDerating 2 = MaxDerating	Parameter Number	82
	Related Parameters	29, 30
	Access Rule	GET/SET
	Data Type	UINT
	Group	Advanced Config.
	Units	—
	Minimum Value	0
	Maximum Value	2
	Default Value	0

Figure 37 - Overload Trip Curves

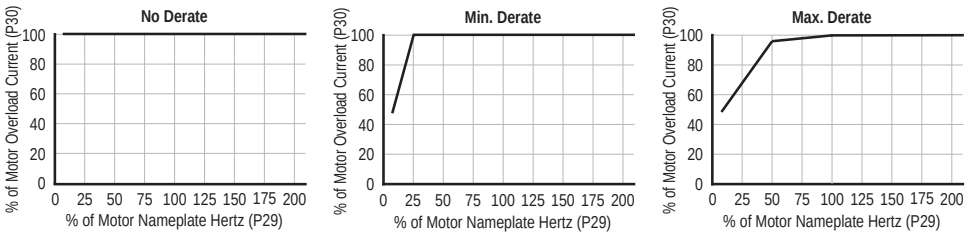

SWCurrentTrip Enables/disables a software instantaneous (within 100 ms) current trip.	Parameter Number	83
	Related Parameter	30
	Access Rule	GET/SET
	Data Type	UINT
	Group	Advanced Config.
	Units	x.x Amps
For 0.5 Hp units – Min = 0; Max = 3.0; Default = 0 For 1.0 Hp units – Min = 0; Max = 5.0; Default = 0 For 2.0Hp units – Min = 0; Max = 8.4; Default = 0	Minimum Value	0.0
	Maximum Value	Hp Dependent
	Default Value	0.0 (Disabled)

AutoRstrtTries Set the maximum number of times the drive attempts to reset a fault and restart.	Parameter Number	84
	Related Parameter	85
	Access Rule	GET/SET
	Data Type	UINT
	Group	Advanced Config.
	Units	—
	Minimum Value	0
	Maximum Value	9
	Default Value	0

Clear a Type 1 Fault and Restart the Drive

1. Set Parameter 84 (AutoRestartTries) to a value other than 0.
2. Set Parameter 85 (AutoRestartDelay) to a value other than 0.

Clear an Overvoltage, Undervoltage, or Heatsink OvrTmp Fault without Restarting the Drive

1. Set Parameter 84 (AutoRestartTries) to a value other than 0.
2. Set Parameter 85 (AutoRestartDelay) to 0.

ATTENTION: Equipment damage and/or personal injury may result if this parameter is used in an inappropriate application. Do not use this function without considering applicable local, national, and international codes, standards, regulations, or industry guidelines.

AutoRstrtDelay Sets time between restart attempts when Parameter 84(Auto Rstrt Tries) is set to a value other than zero.	Parameter Number	85
	Related Parameter	84
	Access Rule	GET/SET
	Data Type	UINT
	Group	Advanced Config.
	Units	x.x secs
	Minimum Value	0.0
	Maximum Value	120.0
	Default Value	1.0

BoostSelect Sets the boost voltage (% of Parameter 28 [MotorNPVolts]) and redefines the Volts per Hz curve. See Table 21 for details.	Parameter Number	86
	Related Parameters	28, 29
	Access Rule	GET/SET
	Data Type	UINT
	Group	Advanced Config.
	Units	—
	Minimum Value	1
	Maximum Value	14
	Default Value	8

Table 21 - Boost Select Options

Options	Description	
	Custom V/Hz	Variable Torque (Typical fan/pump curves)
1	30.0, VT	
2	35.0, VT	
3	40.0, VT	
4	45.0, VT	
5	0.0 no IR	Constant Torque
6	0.0	
7	2.5, CT	
8	5.0, CT (default)	
9	7.5, CT	
10	10.0, CT	
11	12.5, CT	
12	15.0, CT	
13	17.5, CT	
14	20.0, CT	

Figure 38 - Boost Select

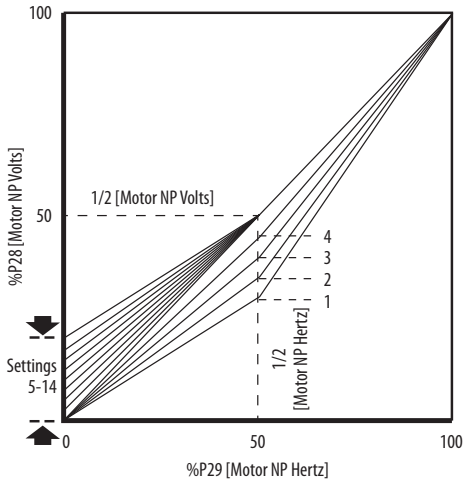

MaximumVoltage Sets the highest voltage the drive will output.	Parameter Number	87
	Related Parameters	—
	Access Rule	GET/SET
	Data Type	UINT
	Group	Advanced Config.
	Units	V AC
	Minimum Value	20V AC
	Maximum Value	460V AC
	Default Value	2V AC

MotorNamePlateFLA Set to the motor nameplate Full Load Amps.	Parameter Number	88
	Related Parameters	—
	Access Rule	GET/SET
	Data Type	UINT
	Group	Advanced Config.
	Units	x.x Amps
	Minimum Value	0.0
For 0.5 Hp units – Min = 0; Max = 3.0; Default = 1.5 For 1.0 Hp units – Min = 0; Max = 5.0; Default = 2.5 For 2.0Hp units – Min = 0; Max = 8.4; Default = 3.6	Maximum Value	Hp Dependent
	Default Value	Hp Dependent

BrakeMode This parameter determines the source brake control mode. 0 = NoBrakeControl 1 = AboveFrequency 2 = AboveCurrent	Parameter Number	89
	Related Parameters	—
	Access Rule	GET/SET
	Data Type	UINT
	Group	Advanced Config.
	Units	—
	Minimum Value	0
	Maximum Value	2
	Default Value	1

BrakeFreqThresh This parameter determines the frequency above which the source brake is released.	Parameter Number	90
	Related Parameters	—
	Access Rule	GET/SET
	Data Type	UINT
	Group	Advanced Config.
	Units	x.x Hz
	Minimum Value	0.0
	Maximum Value	999.9
	Default Value	0.0

BrakeCurrThresh This parameter determines the motor current above which the source brake is released.	Parameter Number	91
	Related Parameters	—
	Access Rule	GET/SET
	Data Type	UINT
	Group	Advanced Config.
	Units	x.xx Amps
	Minimum Value	0.0
	Maximum Value	8.0
	Default Value	0.0

IMPORTANT For parameter 90 and 91 the value of the threshold can be set beyond the operational maximum limit of the product, or at a level which may cause multiple transitions during operation. Threshold values near the operational levels should be avoided.

OptionMatch If product options do not match value, a hardware fault will occur.	Parameter Number	92
	Access Rule	GET/SET
	Data Type	DWORD
	Group	Advance Config
	Units	–
	Minimum Value	0
	Maximum Value	0xffffffff
	Default Value	0

Bit					Function
4-31	**3**	**2**	**1**	**0**	
—	—	—	—	X	KeypadPreesent
—	—	—	X	—	KeypadNotPresent
—	—	X	—	—	BrakePresent
—	X	—	—	—	BrakeNotPresent
X	—	—	—	—	Reserved

AutobaudEnable Autobaud enabled when set 0=Disable 1=Enable	Parameter Number	100
	Access Rule	SET
	Data Type	BOOL
	Group	Network
	Units	–
	Minimum Value	0
	Maximum Value	1
	Default Value	1

ConsumedIOAssy Selects the format of the I/O data consumed 294 default = 154	Parameter Number	101
	Access Rule	SET
	Data Type	USINT
	Group	Network
	Units	–
	Minimum Value	3
	Maximum Value	154
	Default Value	154

ProducedIOAssy Selects the format of the I/O data consumed 294 default = 155	Parameter Number	102
	Access Rule	SET
	Data Type	USINT
	Group	Network
	Units	–
	Minimum Value	52
	Maximum Value	190
	Default Value	155

AutoRunZip Enables this device to produce COS messages on powerup 0=Disable 1=Enable	Parameter Number	103
	Access Rule	SET
	Data Type	BOOL
	Group	ZIP
	Units	–
	Minimum Value	0
	Maximum Value	1
	Default Value	0

ZoneProducedEPR Expected Packet Rate for producing Zip COS connection	Parameter Number	104
	Access Rule	SET
	Data Type	UINT
	Group	ZIP
	Units	msec
	Minimum Value	1
	Maximum Value	65535
	Default Value	75

ZoneProducedPIT Production Inhibit Time for the producing Zip connection	Parameter Number	105
	Access Rule	SET
	Data Type	UINT
	Group	ZIP
	Units	msec
	Minimum Value	1
	Maximum Value	65535
	Default Value	75

Zone1ProducedMacId The MacId address of the device in Zone 1	Parameter Number	106
	Access Rule	SET
	Data Type	USINT
	Group	ZIP
	Units	–
	Minimum Value	0
	Maximum Value	64
	Default Value	64

Zone2ProducedMacId The MacId address of the device in Zone 2	Parameter Number	107
	Access Rule	SET
	Data Type	USINT
	Group	ZIP
	Units	–
	Minimum Value	0
	Maximum Value	64
	Default Value	64

Zone3ProducedMacId The MacId address of the device in Zone 3	Parameter Number	108
	Access Rule	SET
	Data Type	USINT
	Group	ZIP
	Units	–
	Minimum Value	0
	Maximum Value	64
	Default Value	64

Zone4ProducedMacId The MacId address of the device in Zone 4	Parameter Number	109
	Access Rule	SET
	Data Type	USINT
	Group	ZIP
	Units	–
	Minimum Value	0
	Maximum Value	64
	Default Value	64

Zone1Health The status of the DeviceNet connection to the Zone 1 device 0=Healthy 1=NotHealthy	Parameter Number	110
	Access Rule	GET
	Data Type	BOOL
	Group	ZIP
	Units	–
	Minimum Value	0
	Maximum Value	1
	Default Value	0

Zone2Health The status of the DeviceNet connection to the Zone 2device 0=Healthy 1=NotHealthy	Parameter Number	111
	Access Rule	GET
	Data Type	BOOL
	Group	ZIP
	Units	–
	Minimum Value	0
	Maximum Value	1
	Default Value	0

Zone3Health The status of the DeviceNet connection to the Zone 3device 0=Healthy 1=NotHealthy	Parameter Number	112
	Access Rule	GET
	Data Type	BOOL
	Group	ZIP
	Units	–
	Minimum Value	0
	Maximum Value	1
	Default Value	0

Zone4Health The status of the DeviceNet connection to the Zone 4device 0=Healthy 1=NotHealthy	Parameter Number	113
	Access Rule	GET
	Data Type	BOOL
	Group	ZIP
	Units	–
	Minimum Value	0
	Maximum Value	1
	Default Value	0

Zone1PtMask Chooses consumed bytes to be placed in Zone Data Point table	Parameter Number	114
	Access Rule	SET
	Data Type	DWORD
	Group	ZIP
	Units	–
	Minimum Value	0
	Maximum Value	255
	Default Value	0

Zone2PtMask Chooses consumed bytes to be placed in Zone Data Point table	Parameter Number	115
	Access Rule	SET
	Data Type	DWORD
	Group	ZIP
	Units	–
	Minimum Value	0
	Maximum Value	255
	Default Value	0

Zone3PtMask Chooses consumed bytes to be placed in Zone Data Point table	Parameter Number	116
	Access Rule	SET
	Data Type	DWORD
	Group	ZIP
	Units	–
	Minimum Value	0
	Maximum Value	255
	Default Value	0

Zone4PtMask Chooses consumed bytes to be placed in Zone Data Point table	Parameter Number	117
	Access Rule	SET
	Data Type	DWORD
	Group	ZIP
	Units	–
	Minimum Value	0
	Maximum Value	255
	Default Value	0

Zone1Pt0Offset Byte offset in Zone Data Point table to place masked data	Parameter Number	118
	Access Rule	SET
	Data Type	UINT
	Group	ZIP
	Units	–
	Minimum Value	0
	Maximum Value	7
	Default Value	0

Zone2Pt0Offset Byte offset in Zone Data Point table to place masked data	Parameter Number	119
	Access Rule	SET
	Data Type	UINT
	Group	ZIP
	Units	–
	Minimum Value	0
	Maximum Value	7
	Default Value	0

Zone3Pt0Offset Byte offset in Zone Data Point table to place masked data	Parameter Number	120
	Access Rule	SET
	Data Type	UINT
	Group	ZIP
	Units	–
	Minimum Value	0
	Maximum Value	7
	Default Value	0

Zone1Pt0Offset Byte offset in Zone Data Point table to place masked data	Parameter Number	121
	Access Rule	SET
	Data Type	UINT
	Group	ZIP
	Units	–
	Minimum Value	0
	Maximum Value	7
	Default Value	0

Zone1AnalogMask Byte offset in Zone Data Point table to place masked data	Parameter Number	122
	Access Rule	SET
	Data Type	WORD
	Group	ZIP
	Units	–
	Minimum Value	0
	Maximum Value	255
	Default Value	0

Zone2AnalogMask Byte offset in Zone Data Point table to place masked data	Parameter Number	123
	Access Rule	SET
	Data Type	WORD
	Group	ZIP
	Units	–
	Minimum Value	0
	Maximum Value	255
	Default Value	0

Zone3AnalogMask Byte offset in Zone Data Point table to place masked data	Parameter Number	124
	Access Rule	SET
	Data Type	WORD
	Group	ZIP
	Units	–
	Minimum Value	0
	Maximum Value	255
	Default Value	0

Zone4AnalogMask Byte offset in Zone Data Point table to place masked data	Parameter Number	125
	Access Rule	SET
	Data Type	WORD
	Group	ZIP
	Units	–
	Minimum Value	0
	Maximum Value	255
	Default Value	0

Zone1AnOffset Word offset in Analog Zone Data to place masked analog data	Parameter Number	126
	Access Rule	SET
	Data Type	UINT
	Group	ZIP
	Units	–
	Minimum Value	0
	Maximum Value	7
	Default Value	0

Zone2AnOffset Word offset in Analog Zone Data to place masked analog data	Parameter Number	127
	Access Rule	SET
	Data Type	UINT
	Group	ZIP
	Units	–
	Minimum Value	0
	Maximum Value	7
	Default Value	0

Zone3AnOffset Word offset in Analog Zone Data to place masked analog data	Parameter Number	128
	Access Rule	SET
	Data Type	UINT
	Group	ZIP
	Units	–
	Minimum Value	0
	Maximum Value	7
	Default Value	0

Zone4AnOffset Word offset in Analog Zone Data to place masked analog data	Parameter Number	129
	Access Rule	SET
	Data Type	UINT
	Group	ZIP
	Units	–
	Minimum Value	0
	Maximum Value	7
	Default Value	0

Zone1EPR Expected Packet Rate for Zone 1 consuming connection	Parameter Number	130
	Access Rule	SET
	Data Type	UINT
	Group	ZIP
	Units	msec
	Minimum Value	0
	Maximum Value	65535
	Default Value	75

Zone2EPR Expected Packet Rate for Zone 2 consuming connection	Parameter Number	131
	Access Rule	SET
	Data Type	UINT
	Group	ZIP
	Units	msec
	Minimum Value	0
	Maximum Value	65535
	Default Value	75

Zone3EPR Expected Packet Rate for Zone 3 consuming connection	Parameter Number	132
	Access Rule	SET
	Data Type	UINT
	Group	ZIP
	Units	msec
	Minimum Value	0
	Maximum Value	65535
	Default Value	75

Zone4EPR Expected Packet Rate for Zone 4 consuming connection	Parameter Number	133
	Access Rule	SET
	Data Type	UINT
	Group	ZIP
	Units	msec
	Minimum Value	0
	Maximum Value	65535
	Default Value	75

Zone1Control Enables/Disables options for Zone 1 control	Parameter Number	134
	Access Rule	SET
	Data Type	BYTE
	Group	ZIP
	Units	–
	Minimum Value	0
	Maximum Value	0x3F
	Default Value	0x02

Bit								Function
7	**6**	**5**	**4**	**3**	**2**	**1**	**0**	
—	—	—	—	—	—	—	X	SecurityEnable
—	—	—	—	—	—	X	—	COSCnxn
—	—	—	—	—	X	—	—	PollCnxn
—	—	—	—	X	—	—	—	StrobeCnxn
—	—	—	X	—	—	—	—	MulticastPoll
—	—	X	—	—	—	—	—	FragmentedIO
X	X	—	—	—	—	—	—	Reserved

Zone2Control Enables/Disables options for Zone 2 control	Parameter Number	135
	Access Rule	SET
	Data Type	BYTE
	Group	ZIP
	Units	–
	Minimum Value	0
	Maximum Value	0x3F
	Default Value	0x02

Bit								Function
7	**6**	**5**	**4**	**3**	**2**	**1**	**0**	
—	—	—	—	—	—	—	X	SecurityEnable
—	—	—	—	—	—	X	—	COSCnxn
—	—	—	—	—	X	—	—	PollCnxn
—	—	—	—	X	—	—	—	StrobeCnxn
—	—	—	X	—	—	—	—	MulticastPoll
—	—	X	—	—	—	—	—	FragmentedIO
X	X	—	—	—	—	—	—	Reserved

Zone3Control Enables/Disables options for Zone 3 control	Parameter Number	136
	Access Rule	SET
	Data Type	BYTE
	Group	ZIP
	Units	–
	Minimum Value	0
	Maximum Value	0x3F
	Default Value	0x02

Bit								Function
7	**6**	**5**	**4**	**3**	**2**	**1**	**0**	
—	—	—	—	—	—	—	X	SecurityEnable
—	—	—	—	—	—	X	—	COSCnxn
—	—	—	—	—	X	—	—	PollCnxn
—	—	—	—	X	—	—	—	StrobeCnxn
—	—	—	X	—	—	—	—	MulticastPoll
—	—	X	—	—	—	—	—	FragmentedIO
X	X	—	—	—	—	—	—	Reserved

Zone4Control Enables/Disables options for Zone 4 control	Parameter Number	137
	Access Rule	SET
	Data Type	BYTE
	Group	ZIP
	Units	–
	Minimum Value	0
	Maximum Value	0x3F
	Default Value	0x02

Bit								Function
7	**6**	**5**	**4**	**3**	**2**	**1**	**0**	
—	—	—	—	—	—	—	X	SecurityEnable
—	—	—	—	—	—	X	—	COSCnxn
—	—	—	—	—	X	—	—	PollCnxn
—	—	—	—	X	—	—	—	StrobeCnxn
—	—	—	X	—	—	—	—	MulticastPoll
—	—	X	—	—	—	—	—	FragmentedIO
X	X	—	—	—	—	—	—	Reserved

Zone1Key Device Value Key for the device in Zone 1	Parameter Number	138
	Access Rule	SET
	Data Type	UINT
	Group	ZIP
	Units	–
	Minimum Value	0
	Maximum Value	65535
	Default Value	0

Zone2Key Device Value Key for the device in Zone 2	Parameter Number	139
	Access Rule	SET
	Data Type	UINT
	Group	ZIP
	Units	–
	Minimum Value	0
	Maximum Value	65535
	Default Value	0

Zone3Key Device Value Key for the device in Zone 3	Parameter Number	140
	Access Rule	SET
	Data Type	UINT
	Group	ZIP
	Units	–
	Minimum Value	0
	Maximum Value	65535
	Default Value	0

Zone4Key Device Value Key for the device in Zone 4	Parameter Number	141
	Access Rule	SET
	Data Type	UINT
	Group	ZIP
	Units	–
	Minimum Value	0
	Maximum Value	65535
	Default Value	0

DeviceValueKey Device Value Key for this device	Parameter Number	142
	Access Rule	SET
	Data Type	UINT
	Group	ZIP
	Units	–
	Minimum Value	0
	Maximum Value	65535
	Default Value	0

ZoneCtrlEnable Enables or disables this device's Zip functionality 0=Disable 1=Enable	Parameter Number	143
	Access Rule	SET
	Data Type	BOOL
	Group	ZIP
	Units	–
	Minimum Value	0
	Maximum Value	1
	Default Value	0

Notes:

Diagnostics

Overview

This chapter describes the fault diagnostics of the ArmorStart LT Distributed Motor Controller and the conditions that cause various faults to occur.

Status LEDs and Reset

Figure 39 - Status and Diagnostic LEDs and Reset

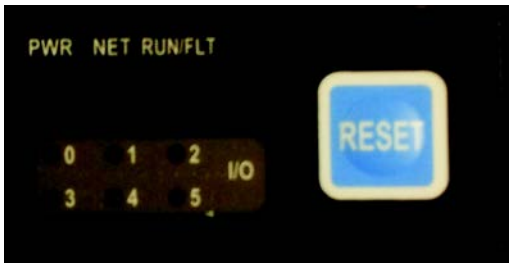

ArmorStart LT provides comprehensive status and diagnostics via 12 individually marked LEDs shown in Figure 39, located on the ECM module. In addition, a local reset is provide for clearing of faults. Table 22 details the diagnostic and status LEDs.

Table 22 - ArmorStart LT Status and Diagnostics Indicators

Indicator	Description	Color_1	Color_2
PWR LED	The bicolor (green/yellow) LED shows the state of the control voltage. When LED is off, switched and/or unswitched power is not present.	Solid green is illuminated when switched and unswitched control power is within its specified limits and has the proper polarity.	Solid yellow is illuminated when switched or unswitched control power is outside its specified limits or has incorrect polarity. Flashing yellow indicates line voltage is not present (294 units only).
RUN/FLT LED	The bicolor (green/red) LED combines the functions of the Run and Fault LEDs.	Solid green is illuminated when a Run command is present.	The LED will blink red in a prescribed fault pattern when a protection fault (trip) condition is present. See table for fault blink patterns.
NET – Network Status LED	The bicolor (green/red) LED indicates the status of the CIP network connection. See Network Status Indicator for further information. Flashing bicolor (red/green) indicates a self-test on power up.	Flashing green indicates a node address is configured, no CIP connections are established, and an Exclusive Owner connection has not timed out. Steady green indicates at least one CIP connection is established and an Exclusive Owner connection has not timed out.	Flashing red indicates the connection has timed out. Steady Red indicates a duplicate IP Address detected.
I/O Status Enunciators 0…5 LEDs	Six yellow LEDs are numbered 0…5 and indicate the status of the input/output connectors. One LED for each I/O point.	Yellow is illuminated when input is valid or output is on.	Off when input is not valid or the output is not turned on.
Reset Button	The blue reset button will cause a protection fault reset to occur.	—	—

Fault Diagnostics

Fault diagnostics capabilities built in the ArmorStart LT Distributed Motor Controller are designed to help you pinpoint a problem for easy troubleshooting and quick restarting.

Protection Faults

Protection faults will be generated when potentially dangerous or damaging conditions are detected. Protection faults are also known as “trips” or “faults”. These faults will be reported in multiple formats, including:

- Bit enumeration in the TripStatus parameter (parameter 16) used as discrete bits or in DeviceLogix
- In the ArmorStart LT web server for ArmorStart EtherNet/IP version
- As a sequence of LED flashes on the ECM

LED Flash	Bit Enumeration	290D/291D Trip Status Bits	294D Trip Status Bits
1	0	OverloadTrip ❶	OverloadTrip ❶
2	1	PhaseLossTrip	PhaseLShortTrip
3	2	UnderPowerTrip ❶	UnderPowerTrip ❶
4	3	SensorShortTrip ❶	SensorShortTrip ❶
5	4	PhaseImbalTrip	OverCurrentTrip
6	5	NonVolMemoryTrip ❶	NonVolMemoryTrip ❶
7	6	reserved	ParamSyncTrip ❶
8	7	JamTrip	DCBusOrOpenDiscnnct ❶
9	8	StallTrip	StallTrip ❶
10	9	UnderloadTrip	OverTemperature ❶
11	10	reserved	GroundFault ❶
12	11	reserved	RestartRetries
13	12	reserved	DriveHdwFault ❶
14	13	OutputShortTrip ❶	OutputShortTrip ❶
15	14	UserDefinedTrip	UserDefinedTrip
16	15	HardwareFltTrip ❶	HardwareFltTrip ❶

❶ Can not be disabled.

A “ProtectFltEnable” parameter (param 42) is used to enable and disable individual protection faults. This parameter will be a bit enumerated parameter with each “disable-able fault” bit enumerated. Not all Faults can be disabled. Setting a bit to the value “1” enables the corresponding protection fault. Clearing a bit disables the protection fault. For protection faults that can not be disabled the value is always “1”.

There are two Protection Fault Reset modes: manual and automatic. When parameter 41 “ProtFltResetMode” is set to the value 0=Manual mode, a manual fault reset must occur before the fault is reset. When manual reset mode faults are

latched until a fault reset command has been detected either locally or remotely. A Manual reset operation is either remotely via the network, locally via the "Reset" button on the front keypad, or via a DeviceLogix program. A rising edge (0 to 1 transition) of the "ResetFault" tag will attempt a reset. A rising edge of the parameter 44 "ProtectFltReset" will attempt a reset. A press of the local blue "Reset" button on the front keypad will attempt a reset. A rising edge of the "ResetFault" DeviceLogix tag will attempt a reset. When "ProtFltResetMode" is set to the value 1=Automatic, "auto-reset" faults are cleared automatically when the fault condition goes away.

Quick Reference Troubleshooting

The LEDs on the front of the ArmorStart LT provide an indication as to the health of the device and network. The following is a brief troubleshooting guide.

Table 23 - LED Status Indication

Status LED	Description	Recommended Action
PWR (Control) Status Indicator		
Off	The PWR LED is not illuminated at all.	Verify power is connected and with proper polarity.
Green	Voltage is present.	No action
Flashing Yellow	Power has fallen below minimum acceptable level.	Verify that the control power is between 19.2 and 26V DC.
RUN/FLT Status Indicator		
Off	The RUN/FLT LED is not illuminated when a Run command has been issued.	Verify that PLC is in Run mode. Verify that the correct run bit is being controlled. Verify that a stop condition does not exist.
Green	Valid start command	No action
Flashing Red	Protection fault	Count flashes and refer to Table 24 and 25.
NS – Network Status Indicator		
Off	The NS LED is not illuminated.	Check to make sure the product is properly wired and configured on the network.
Steady Green	CIP connection is established.	No action
Flashing Green	An IP address is configured, but no CIP connections are established, and an Exclusive Owner connection has not timed out.	Check to make sure the product is properly wired and configured on the network.
Flashing Red	Connection has timed out.	Check to make sure the PLC is operating correctly and that there are no media/cabling issues. Check to see if other network devices are in a similar state.
Solid Red	Duplicate IP address detected	Check for node address conflict and resolve.
Flashes Green-Red	The device has not completed the initialization, is not on an active network, or has not finished self test at power up.	Remove or change the IP address of the conflicting device.
I/O Status Indicators		
Off	The user has plugged into the I/O, but the indicator did not illuminate, once initiated.	Verify the wiring of Input or Output is correct. When used as an output point, ensure the corresponding bit in parameter 49 [IOPointConfiguration] is set to Output.

Fault LED Indications

The RUN/FLT LED will blink red in a prescribed fault pattern when a protection fault (trip) condition is present. The LED will blink in 0.5 second intervals when indicating a fault code. Once the pattern is finished, there will be a 2 second pause after which the pattern will be repeated.

Bulletin 290D/291D Faults

Bulletin 290D/291D faults are detected by the main control board. When the [ProtFltResetMode] Parameter 41 is set to the value 1=Automatic, the auto resettable faults in the table will reset automatically when the fault condition is no longer present.

Table 24 - Fault LED Indicator for Bulletin 290D/291D

Blink Pattern	Auto-Reset	Disable	Default	Bulletin 290D/ 291D Trip Status	Description	Action
1	Yes	No	On	Overload Trip	The load has drawn excessive current and based on the trip class selected, the device has tripped.	Verify that the load is operating correctly and is properly set-up, [FLASetting] Parameter 28, [OLResetLevel] Parameter 29. The fault may be reset only after the motor has sufficiently cooled.
2	Yes	Yes	Off	Phase Loss Trip	The ArmorStart LT has detected a missing phase.	This fault is generated by monitoring the relative levels of the 3-phase currents. Correct phase imbalance or disable fault using [ProtectFltEnable] Parameter 42.
3	Yes	No	On	Under Power Trip	The ArmorStart LT detected switched or unswitched power dip below 19.2 V for greater than 50 ms, or 13 V for greater than 4 ms.	Check control voltage, wiring, and proper polarity (A1/ A2/A3 terminal).
4	No	No	On	Sensor Short Trip	This error indicates a shorted sensor, shorted input device, wiring input mistakes.	Correct, isolated or remove wiring error prior to restarting the system.
5	Yes	Yes	Off	Phase Imbalance Trip	The ArmorStart LT has detected a current imbalance in one of the phases.	Check the power system for current imbalance and correct. Correct phase imbalance or disable fault using [ProtectFltEnable] Parameter 42.
6	No	No	On	Non-Volatile Memory Trip	This is a major fault, which renders the ArmorStart LT inoperable. Possible causes of this fault are transients induced during Non-Volatile Storage (NVS) routines.	1. If the fault was initiated by a transient, power cycling may clear the problem. 2. This fault may be reset by a [SetToDefaults] Parameter 68. 3. Replacement of the ArmorStart LT may be required.
7	—	—	—	Reserved	—	—
8	No	Yes	Off	Jam Trip	During normal running (after starting period), the RMS current draw exceeds the prescribed fault level. This fault is generated when current is greater than the Jam Trip Level for longer than the Jam Delay time after the Jam Inhibit time has expired.	1. Check for the source of the jam (for example, excessive load or mechanical transmission component failure). 2. Check [JamInhibitTime] Parameter 70, [JamTripDelay] Parameter 71, and [JamTripLevel] Parameter 72 setting.
9	No	Yes	Off	Stall Trip	During starting, the motor did not reach running speed within the prescribed period. This fault is generated when the RMS current is greater than [StallTripLevel] Parameter 75 or longer than [StallEnbldTime] Parameter 74 during motor starting.	1. Check for source of stall (for example, excessive load, or mechanical transmission component failure). 2. Check [StallEnabledTime] Parameter 74 and [StallTripLevel] Parameter 75. 3. Check if [FLASetting] Parameter 28 is set correctly.
10	No	Yes	Off	Underload Trip	Underload protection is for undercurrent monitoring. A trip occurs when the motor current drops below the trip level.	Check motor and mechanical system for broken shaft, belts, or gear box. Check [ULInhibitTime] Parameter 76, [ULTripDelay] Parameter 77, [ULTripLevel] Parameter 78, and [ULWarningLevel] Parameter 79.
11	—	—	—	Reserved	—	—
12	—	—	—	Reserved	—	—
13	—	—	—	Reserved	—	—
14	No	No	On	Output Short Trip	This fault is generated when a hardware output short circuit condition is detected.	Correct, isolate or remove wiring error prior to restarting the system.
15	Yes	Yes	Off	User Defined Trip	This fault is generated either in response to the rising edge of user input 0...5, [Input00Function...Input- 05Function] Parameter 58...63, or by DeviceLogix.	This fault is generated based on user configuration. This fault may be reset after the condition that caused it is removed. For example, the Auxiliary Input goes low or the DeviceLogix logic drives the bit low.
16	No	No	On	Hardware Fault Trip	This fault indicates that a serious hardware problem exists.	Power cycle to correct. If fault persists the ArmorStart LT requires replacement.

Bulletin 294D Faults

Bulletin 294E faults are detected by the main control board and/or the internal drive. When there is an internal drive fault, the main control board simply polls the drive for the existence of faults and reports the fault state. Writing a value to [ProtFltResetMode] Parameter 41 determines auto-reset ability for some faults. The auto-reset ability of faults that are generated on the drive are controlled by [AutoRestartTries] Parameter 84 and [AutoRestar Delay] Parameter 85.

Auto Reset

Table 25 - Auto Reset Ability

Auto Reset	Function	Description
Drive Control	Auto-Reset/Run	When this type of fault occurs, and [AutoRestartTries] Parameter 84 is set to a value greater than "0," a user-configurable timer, [AutoRestartDelay] Parameter 85, begins. When the timer reaches zero, the drive attempts to automatically reset the fault. If the condition that caused the fault is no longer present, the fault will be reset and the drive will be restarted.
No	User Action Needed	This type of fault requires drive or motor repair, or is caused by wiring or programing errors. The cause of the fault must be corrected before the fault can be cleared via manual or network reset. A rising edge of the "Fault Reset" DeviceLogix bit will also clear the fault.
Yes	[ProtFltResetMode] Parameter 41 = 1 which is automatic	Faults are cleared automatically when the fault condition goes away.

Table 26 - Fault LED Indicator for Bulletin 294D

Blink Pattern	Auto-Reset Capable	Disable	Default	Bulletin 294E Trip Status	Description	Action
1	Drive Controlled	No	On	Overload Trip *(PF 4M Codes 7 and 64)*	This fault is a result of the drive's Motor Overload fault or the Drive Overload fault. Exceeding the Drive overload rating of 150% for 1 minute or 200% for 3 seconds caused the device to trip.	The fault may be reset only after the overload algorithm determines that the motor has sufficiently cooled or that the Drive heatsink temperature falls to an acceptable level. Check the following: 1. Excessive motor load. Reduce load so drive output current does not exceed the current set by [MotorOLCurrent] Parameter 30. 2. Verify [BoostSelect] Parameter 86 setting.
2	No	No	On	Phase Short *(PF 4M Codes 38…43)*	This fault is a result of the drive's Phase to Ground Short faults *(Codes 38…40)* or Phase to Phase Short faults *(Codes 41…43)*.	1. Check the wiring between the drive and motor. 2. Check motor for grounded phase. 3. Replace ArmorStart LT if fault cannot be cleared.
3	Yes	No	On	Under Power Trip	The ArmorStart LT detected switched or unswitched power dip below 19.2 V for greater than 50 ms, or 13 V for greater than 4 ms.	Check control voltage, wiring, and proper polarity (A1/A2 terminal). Correct power loss or disable fault using [ProtectFltEnable] Parameter 42.
4	No	No	On	Sensor Short Trip	This error indicates a shorted sensor, shorted input device, wiring input mistakes.	Correct, isolated or remove wiring error prior to restarting the system.
5	Drive Controlled	No	On	Over Current *(PF 4M Codes 12 and 63)*	This fault is a result of the drive's HW OverCurrent fault or it's SW OverCurrent fault.	1. Check for excess load, improper [BoostSelect] Parameter 86 setting or other causes of excess current or 2. Check load requirements and [SWCurrentTrip] Parameter 83 setting.
6	No	No	On	Non-Volatile Memory Trip *(PF 4M Code 100)*	This is a major fault, which renders the ArmorStart LT inoperable. Possible causes of this fault are transients induced during Non-Volatile Storage (NVS) routines.	1. If the fault was initiated by a transient, power cycling may clear the problem. 2. This fault may be reset by a [SetToDefaults] Parameter 68. 3. Replacement of the ArmorStart LT may be required.

Table 26 - Fault LED Indicator for Bulletin 294D

Blink Pattern	Auto-Reset Capable	Disable	Default	Bulletin 294E Trip Status	Description	Action
7	Yes	No	On	Parameter Sync *(PF 4M Codes 48, 71 and 81)*	This fault is generated during the parameter synchronization procedure between the Control Module and the internal drive when the syncing process fails resulting in the drive configuration not matching the Control Module configuration.	1. The most common cause of this fault is that the disconnect has been opened, or that power has been removed from the drive. To clear the fault, repower the drive and activate a reset. 2. The drive may have been commanded to default values. Clear the fault or cycle power to the drive.
8	Drive Controlled	No	On	DCBusOrDiscnnct ❶ *(PF 4M Codes 3, 4 and 5)*	This fault is a result of the drive's Power Loss *(PF 4M Code 3)*, UnderVoltage *(PF 4M Code 4)* and OverVoltage *(PF 4M Code 5)* faults. When an Undervoltage occurs because the Disconnect has been opened, the condition will be diagnosed as an "Open Disconnect" trip	1. The most common cause of this fault is that the disconnect has been opened, or that power has been removed from the drive. To Clear the fault, repower the drive and activate a reset. 2. Monitor the incoming line for phase loss or line imbalance, low voltage or line power interruption. high line voltage or transient conditions. Bus OverVoltage can also be caused by motor regeneration. 3. Extending the [DecelTime1] Parameter 37 or [DecelTime2] Parameter 70 may also help with this fault.
9	Drive Controlled	No	On	Stall Trip *(PF 4M Code 6)*	During starting the motor did not reach running speed within the prescribed period. This fault occurs when the drive detects a motor stall condition during acceleration.	1. Check for source of stall (for example, excessive load, or mechanical transmission component failure). 2. Increase [AccelTime1] Parameter 36 or [AccelTime2] Parameter 69 or reduce load so drive output current does not exceed the current set by [CurrentLimit] Parameter 31.
10	Drive Controlled	No	On	Over Temperature *(PF 4M Code 8)*	This fault occurs when the drive detects a heat sink over temperature condition.	Check for blocked or dirty heat sink fins. Verify that ambient temperature has not exceeded 40° C (104° F).
11	No	No	On	Ground Fault *(PF 4M Code 13)*	This fault occurs a current path to earth ground has been detected at one or more of the drive output terminals.	Check the motor and external wiring to the drive output terminals for a grounded condition.
12	No	No	On	Restart Retries *(PF 4M Code 33)*	Drive unsuccessfully attempted to reset a fault and resume running for the programmed number of auto retries.	Correct the cause of the fault and manually clear. Check [AutoRestartTries] Parameter 84 and [AutoRestartDelay] Parameter 85 meets application needs.
13	No	No	On	Drive Hardware Fault	Failure has been detected in the drive power section.	1. Cycle power. 2. Replace unit if failure can not be cleared.
14	No	No	On	Output Short	This fault is generated when a hardware output short circuit condition is detected.	Correct, isolate or remove wiring error prior to restarting the system.
15	Yes	Yes	Off	User Defined	This fault is generated either in response to the rising edge of user input 0...5, [Input00Function...Input- 05Function] Parameter 58...63.	This fault is generated based on user configuration. This fault may be reset after the condition that caused it is removed. For example, the Auxiliary Input goes low or the DeviceLogix logic drives the bit low.
16	No	No	On	Hardware Fault Trip	This fault indicates that a serious hardware problem exists. This fault is generated when either the PF 4M drive is not detected or an invalid factory configuration setting is detected.	Power cycle to correct. If fault persists the ArmorStart LT requires replacement.

❶ In the case of a Disconnect open fault, reclosing the disconnect will cause a reset to be issued.

Notes:

Specifications

Bulletin 290D/291D

Electrical Ratings				
Power Circuit	Application	Three-phase		
	Number of Poles	3		
	Input Power Terminals	L1, L2, L3		
	Motor Power Terminals	T1, T2, T3		
	PE (Earth Ground) Terminal	4 PE terminals		
	Maximum Rated Operating Voltage	400Y/230…480Y/277 (-15%, +10%)		
	Rated Impulsed Voltage (U_{imp})	4 kV		
	Dielectric Withstand	**UL**: 1960V AC, **IEC**: 2500V AC		
	Operating Frequency	50/60 Hz (±10%)		
	Maximum Rated Operating Current	**Cat. No.**	**Hp (kW)**	**Overload Range**
		290_-____-A-* 291_-____-A-*	2 (1.5)	0.24…3.5 A
		290_-____-B-* 291_-____-B-*	5 (3)	1.1…7.6 A
	Overload Type	Solid-state I^2T		
	Trip Class	**[10]**, 15, 20 with thermal memory retention (see Motor Overload Trip Curves)		
	Trip Rating — Full Load Current (FLC)	120% of FLC		
	Reset Mode	Automatic or manual		
	Overload Reset Level	1…100% TCU		
	Overvoltage Category	III		

Electrical Ratings				
Control Circuit (External Source)	Power Supply	NEC Class 2		
	Rated Operating Voltage	24V DC (+10%, -20%)		
	Overvoltage Protection	Reverse-polarity protected		
	Unswitched Power Supply Requirements	Voltage	19.2…26.4V DC	
		Nominal Current	150 mA	
		Power	3.6 W	
		Input Current (each) ❶	50 mA	
		Maximum Current	450 mA	
		Maximum Power	14.4 W	
		Peak Inrush ❷	<5 A for 35 ms	
	Switched Power Supply Requirements	Voltage	19.2…26.4V DC	
		Nominal Current	125 mA	
		Power	3 W	
		Output Current (each) ❶	500 mA	
		Maximum Current	1.625 A	
		Maximum Power	42 W	
		Peak Inrush ❷	<5 A for 35 ms	
	Switched and Unswitched Power Supply Requirements	Voltage	19.2…26.4V DC	
		Nominal Current	275 mA	
		Power	6.6 W	
		Number of Inputs (x 50 mA)	user defined	
		Number of Outputs (x 500 mA)	user defined	
		Maximum Current	275 mA + user defined	
		Maximum Power	6.6 W + (24V DC x user defined)	
		Peak Inrush ❷	<10 for 35 ms	
Control Circuit (Internal Source)	An internal 50 W power supply sources 24V DC for input, outputs, and logic control.			
Short Circuit Current Rating (SCCR)	**Cat. No.**	**Sym. Amps RMS**	**Circuit Breaker**	**Fuse**
	290/1_-*-G1 (or G3)	10 kA @ 480Y/277	When used with Allen Bradley Cat. No. 140U-D6D3-C30	CC, J, or T fuse (maximum 45 A)
	290/1_-*-G1 (or G3)	5 kA @ 480Y/277		UL Class fuse (maximum 45 A)
	290/1_-*-G2	10 kA @ 480Y/277		CC, J, or T fuse (maximum 40 A)
Short Circuit Coordination	Type 1			
	Size per NFPA 70 (NEC) or NFPA 79 for Group Motor Applications			

❶ I/O is configurable to either input or output.

❷ Assumes zero wire resistance. Wire impedance will reduce current inrush.

Input and Output Ratings		
Input	Supply Voltage	Unswitched power A3/A2
	Type of Inputs	24V DC current sinking
	Connection Type	Single keyed M12, quick disconnect
	Input per Connection	1/each
	Rated Operating Voltage	24V DC
	On-State Input Voltage (pin 4)	10…26.4V DC, nominal 24V DC
	Off-State Input Voltage	5V DC
	On-State Input Current (pin 4)	1…3.7 mA, 2.6 mA @ 24V DC
	Off-State Input Current	<1.5 mA
	Maximum Sensor Leakage Current	<2.5 mA
	Maximum Number of Input Devices	6
	Maximum Sensor Sourcing Current (pin 1)	50 mA per point (max 300 mA total for sourcing one device)
	Sensor Operating Voltage Range	19.2…26V DC
	Input Bounce Filter ❶ (Software Configurable)	Off-On or On-Off: 0.5 ms + 64 ms
	Filtering	100 µs
	DeviceLogix I/O Response	2 ms (500 Hz)
Output	Supply Voltage (Switched Power)	A1/A2
	Type of Outputs	DC sourcing
	Load Types	Resistive or light inductive
	Utilization Category (IEC)	DC-1, DC-13
	Output State	Normally Open (N.O.)
	Connection Type	Single keyed M12, quick disconnect
	Output per Connection	1/each
	Overcurrent Protection ❷	1.5 A (the sum of all outputs cannot exceed this value)
	Rated Insulation Voltage (U_i)	**UL:** 1500V AC, **IEC:** 2000V AC
	Rated Operating Voltage (U_e)	19.2…26.4V DC
	Maximum Blocking Voltage	35V DC
	Nominal Operating Current (I_e)	500 mA per point
	Maximum Thermal Current (I_{the})	500 mA per point
	Maximum Off-state Leakage Current	1 µA
	Maximum Number of Outputs	6
	Surge Suppression	Integrated diode to protect against switching loads

❶ Input ON-to-OFF delay time is the time from a valid input signal to recognition by the module.

❷ If an output exceeds 1.5 A for greater than 7 ms, a fault is generated.

Environmental Ratings	
Operating Temperature Range	-20…+50 °C (-4…+122 °F)
Storage and Transportation Temperature Range	-25...+85 °C (-13…+185 °F)
Altitude	2000 m
Humidity	5…95% (non-condensing)
Pollution Degree	3
Enclosure Ratings	IP66/UL Type 4/12 ❶
Approximate Shipping Weight	4.6 kg (10 lb)

Mechanical Ratings				
Resistance to Shock	Operational	30 G, exceeds IEC 60947-1		
	Non-Operational	50 G, exceeds IEC 60947-1		
Resistance to Vibration	Operational	2.5 G, tested to MIL-STD-810G, exceeds IEC 60947-1		
	Non-Operational	5 G, tested to MIL-STD-810G, exceeds IEC 60947-1		
Disconnect Lock Out	Maximum of 3/8 in. (9.5 mm) diameter lock shackle or hasp			
Disconnect LOTO Locks	Up to 2 locks or hasps are supported			
Disconnect Mechanical Life	200 000 operations			
Contractor Utilization Category (IEC)	AC-1, AC-3, AC-4 (refer to Life Load Curves)			
Contactor Opening Delay	8…12 ms			
Contactor Closing Delay	18…40 ms			
Minimum Off Time	200 ms			
Contactor Mechanical Life	15 million operations			
	Power Terminals	**Motor Terminals**	**Control Terminals**	**PE/Ground**
Wire Size	(2) #18 …#10 AWG (0.8…5.2 mm^2) per terminal	#18…#10 AWG (0.8…5.2 mm^2) per terminal	(2) #18 …#10 AWG (0.8…5.2 mm^2) per terminal	(2) #16 …#10 AWG (1.3…5.2 mm^2) per terminal
Wire Type	Multi-strand copper wire			
Tightening Torque	10.6 ± 2 lb•in (1.2 ± 0.2 N•m)			18 ± 2 lb•in (2 ± 0.2 N•m)
Wire Strip Length	0.35 ± 0.01 in. (9 ± 2 mm)			
Power Rating	600V AC/25 Amp VAC	600 V AC/10 Amp VAC	600 V AC/10 Amp VAC	—

Emission and Immunity Ratings		
Emission	Conducted	EN 60947-4-1 Class A
	Radiated	
	Electrostatic Discharge	4 kV contact, 8 kV air
	Radio Frequency Electromagnetic Field	EN 60947-4-1 10V/m, 80 MHz…1 GHz 10V/m, 1.4 GHz…2 GHz
Immunity	Fast Transient	2 kV (Power) 2 kV (PE) 1 kV (Communication and control)
	Surge Transient	1 kV (12) $_{L-L}$, 2 kV (2) $_{L-N}$ (earth)
	Radio Frequency Conducted Disturbance	10V, 150 kHz…80 MHz

❶ IP66/UL Type 4 is available with gland options G1-3. IP66/UL Type 4/12 available with G1 and G3 gland option

Standards Compliance and Certifications			
	UL/CSA	**EN/IEC**	**Other Agencies**
Standards Compliance	UL 508 Industrial Control Equipment – Suitable for Group Installation CSA C22.2, No. 14	EN 60947-4-1 Low Voltage Switchgear CE Marked per Low Voltage Directive 2006/95/EC and EMC Directive 2004/108/EC	CCC (Pending) KCC C-Tick ODVA for EtherNet/IP and DeviceNet
Certifications	cULus (File No. E3125, Guide NLDX, NLDX7)		

Communication Ratings		
	Rated Insulation Voltage	250V
	Operating Dielectric Withstand	**UL/NEMA**: 1500V AC, **IEC**: 2000V AC
EtherNet/IP	EtherNet/IP ODVA – Conformance Testing	EtherNet/IP Interoperability Performance – Per A9 PF 2.1
	Ethernet Communication Rate	10/100 Mbps, half or full-duplex
	Ethernet Ports	2 (embedded switch)
	Ethernet Network Topologies Supported	Star, Tree, Linear, and Ring
	Device Level Ring Support	Beacon Performance, IEEE 1588 Transparent Clock
	Ethernet Connector	M12, D code, female, with Ethernet keying, 4 Pin
	Ethernet Cable	Category 5e: Shielded or unshielded
	IP Configuration	Static, DHCP, or BootP
	DHCP Timeout	30 s
	Data	Transported over both TCP and UDP
	Packet Rate (pps)	500 packets-per-second (2000 µs), Tx 500 packets-per-second (2000 µs), Rx
	Consume Instance (Command)	Default of 3 words (Instance 150)
	Produce Instance (Status)	Default of 14 words (Instance 152)
	Message Support	Unicast or Multicast
	Address Conflict Detection (ACD)	IP v4 Address Conflict Detection for EtherNet/IP devices
	Sockets	150 maximum
Web Server	Security	Login and password configurable
	E-mail	Support Simple Mail Transfer Protocol (SMTP)
	Webpage Features	Status, diagnostics, configuration
	Concurrent Sessions	20
	Web Server	HTTP 1.1
Network Connections	Concurrent TCP Connections	Maximum of 15 encapsulated messages over both TCP and UDP
	Maximum I/O Connections (CIP Class 1)	Supports up to 2 Class 1 CIP connections [Exclusive owner (data) or listen-only]. One connection per PLC. Listen only connection requires a data connection to be established.
	Maximum Concurrent Explicit Messages (CIP Class 3)	6
	Class 1 Connection API	2…3200 ms
	Class 3 Connection API	100…10 000 ms
	Request Packet Interval (RPI)	20 ms default (2 ms minimum)

Motor Overload Trip Curves

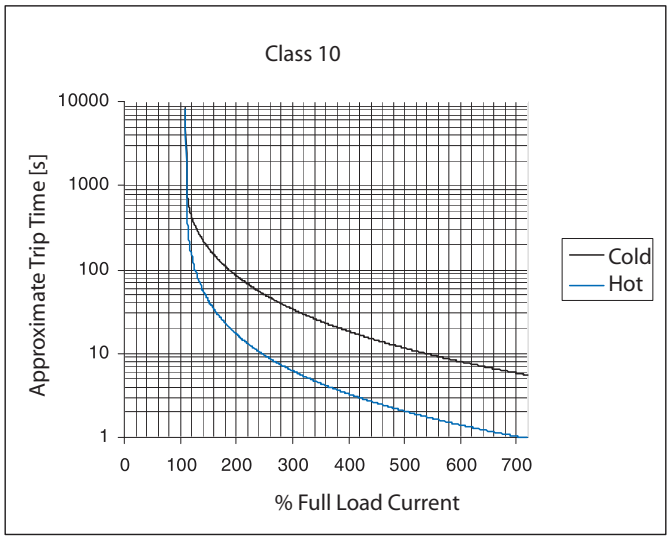

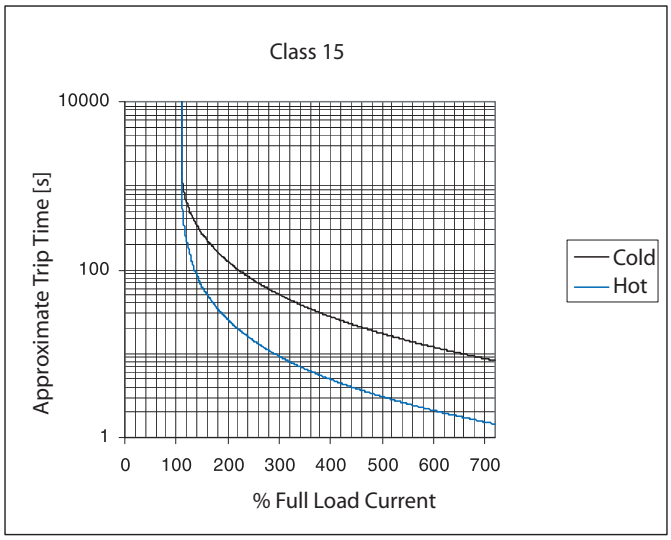

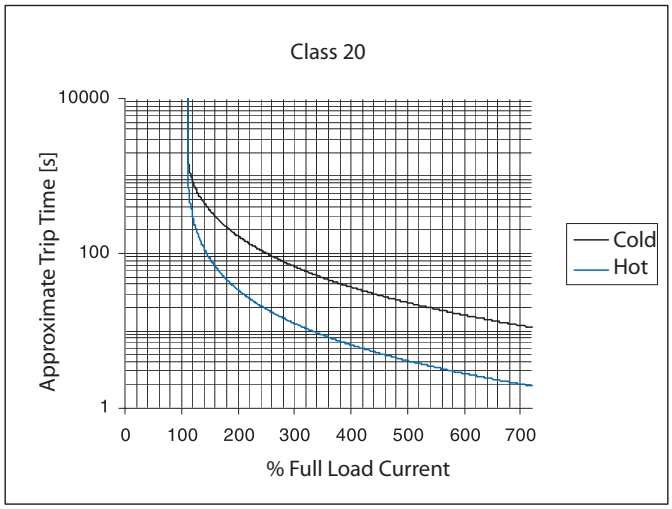

Bulletin 100-K/104-K Life-Load Curves

Electrical life; Ue = 400…460V AC
AC-3: Switching of squirrel-cage motors while starting

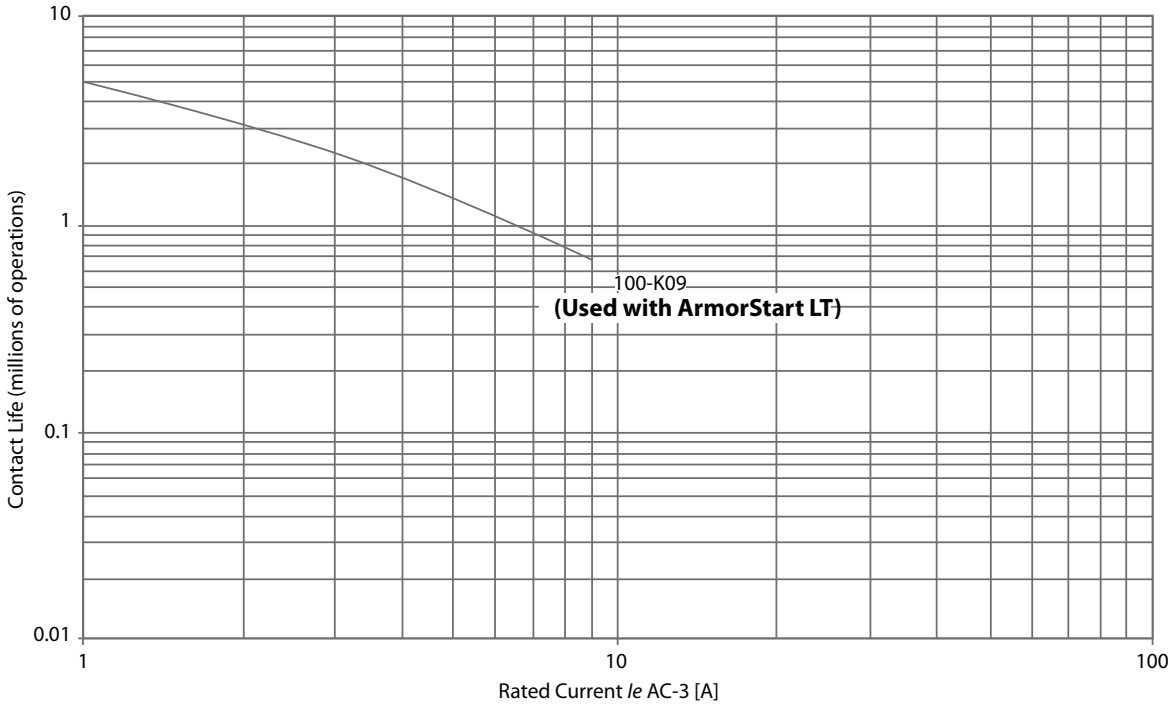

Electrical life; Ue = 400…460V AC
AC-4: Stepping of squirrel-cage motors

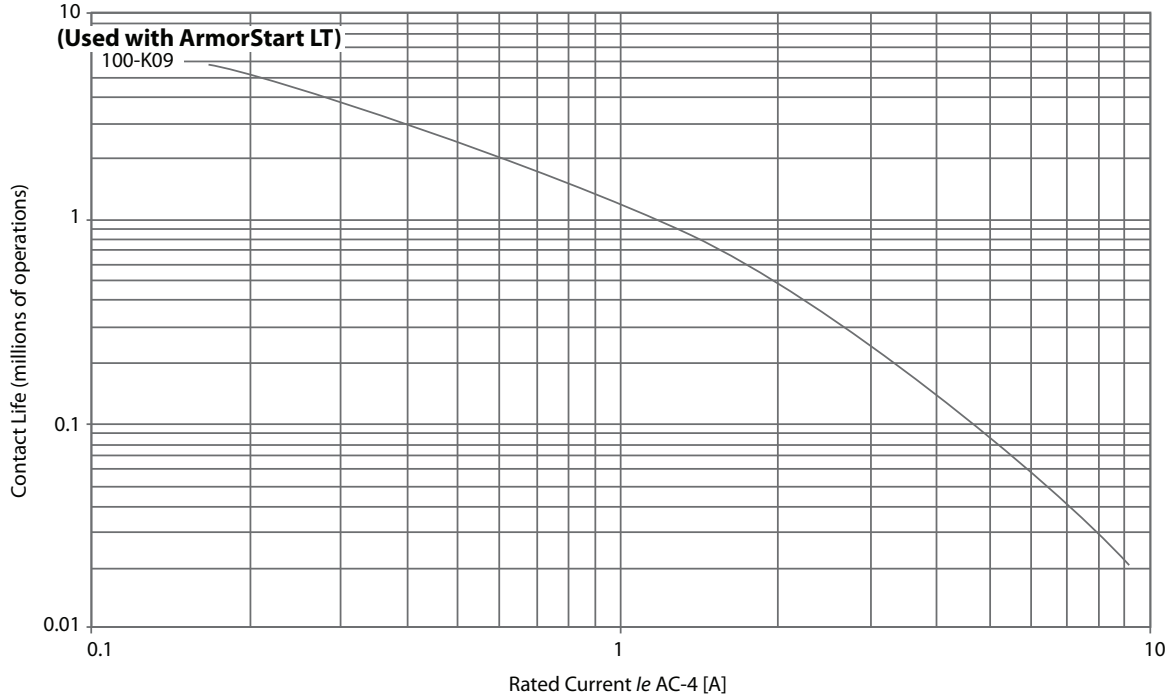

Bulletin 294D

Electrical Ratings		
Power Circuit	Application	Three-phase
	Number of Poles	3
	Input Power Terminals	L1, L2, L3
	Motor Power Terminals	T1, T2, T3
	PE (Earth Ground) Terminal	4 PE terminals
	Maximum Rated Operating Voltage	400Y/230…480Y/277 (-15%, +10%)
	Rated Impulsed Voltage (U_{imp})	4 kV
	Dielectric Withstand	**UL:** 1960V AC, **IEC:** 2500V AC
	Operating Frequency	50/60 Hz (±10%)

Power Circuit	Maximum Rated Operating Current	**Cat. No.**	**Hp (kW)**	**Input Amps 400V AC, 50 Hz**	**Input Amps 480V AC, 60 Hz**	**Output Amps**
		294_-FD1P5*	0.5 (0.37)	2.0	1.8	1.5
		294_-FD2P5*	1.0 (0.75)	3.7	3.0	2.5
		294_-FD4P2*	2.0 (1.5)	6.5	5.5	3.6
	Overload Protection	Solid-state I^2T type	150% for 60 s or 200% for 3 s			
		Trip Class	Class 10 protection with speed sensitive response and power-down overload retention function			
		Overcurrent Protection	200% hardware limit, 300% instantaneous fault			
	Overvoltage Category		III			
	Reset Mode		Automatic or manual			
	Output Frequency		0…400 Hz (programmable)			
	Efficiency		97.5% typical			
	Overvoltage		380…480V AC Input – Trip occurs at 810V DC bus voltage (equivalent to 575V AC incoming line)			
	Undervoltage		380…480V AC Input – Trip occurs at 390V DC bus voltage (equivalent to 275V AC incoming line)			
	Control Ride Through		Minimum ride through is 0.5 s — typical value is 2 s			
	Faultless Power Ride Through		10 ms			
	Carrier Frequency		2…10 kHz, drive rating based on 4 kHz			
	Speed Regulation — Open Loop with Slip Compensation		±2% of base speed across a 40:1 speed range			
	Acceleration/Deceleration		Two independently programmable acceleration and deceleration times. Each time may be programmed from 0…600 s, in 0.1 s increments.			
	Maximum Motor Cable Lengths (Reflected Wave Protection) ❶		10 m (32 ft)(CE application) 14 m (45.9 ft) (non-CE application ❷)			
	Source Brake (EM Brake) Current		Maximum load current of 3 A			

❶The reflected wave data applies to all frequencies 2…10 kHz.

❷ For CE compliant installations refer to the recommended EMI/RFI cord grip accessory. For availability of the quick disconnect three-phase shielded power and motor cable contact your local sales representative for details.

Electrical Ratings				
Control Circuit (External Source)	Power Supply	NEC Class 2		
	Rated Operating Voltage	24V DC (+10%, -20%)		
	Overvoltage Protection	Reverse-polarity protected		
	Unswitched Power Supply Requirements	Voltage	19.2…26.4V DC	
		Nominal Current	150 mA	
		Power	3.6 W	
		Input Current (each) ❶	50 mA	
		Maximum Current	450 mA	
		Maximum Power	14.4 W	
		Peak Inrush ❷	<5 A for 35 ms	
	Switched Power Supply Requirements	Voltage	19.2…26.4V DC	
		Nominal Current	125 mA	
		Power	3 W	
		Output Current (each) ❶	500 mA	
		Maximum Current	1.625 A	
		Maximum Power	42 W	
		Peak Inrush ❷	<5 A for 35 ms	
	Switched and Unswitched Power Supply Requirements	Voltage	19.2…26.4V DC	
		Nominal Current	275 mA	
		Power	6.6 W	
		Number of Inputs (x 50 mA)	user defined	
		Number of Outputs (x 500 mA)	user defined	
		Maximum Current	275 mA + user defined	
		Maximum Power	6.6 W + (24 x user defined), (60 W max.)	
		Peak Inrush ❷	<10 A for 35 ms	
Control Circuit (Internal Source)	An internal 50 W power supply sources 24V DC for input, outputs, and logic control.			
Short Circuit Current Rating (SCCR)	**Cat. No.**	**Sym. Amps RMS**	**Circuit Breaker**	**Fuse**
	294_-*-G1 or (-G3)	10 kA @ 480Y/277	When used with Allen-Bradley Cat. No. 140U-D6D3-C30	CC, J, or T fuse (maximum 45 A)
	294_-*-G1 or (-G3)	5 kA @ 480Y/277		UL Class fuse (maximum 45 A)
	294_-*-G1-SB	10 kA @ 480Y/277		CC, J, or T fuse (maximum 40 A)
	294_-*-G1-SB	5 kA @ 480Y/277		UL Class fuse (maximum 40 A)
	294_-*-G2*	10 kA @ 480Y/277		CC, J, or T fuse (maximum 40 A)
Short Circuit Coordination	Type 1			
	Size per NFPA 70 (NEC) or NFPA 79 for Group Motor Applications			

❶ I/O is configurable to either input or output.

❷ Assumes zero wire resistance. Wire impedance will reduce current inrush.

Input and Output Ratings		
Input	Supply Voltage	Unswitched power A3/A2
	Type of Inputs	24V DC current sinking
	Connection Type	Single keyed M12, quick disconnect
	Input per Connection	1/each
	Rated Operating Voltage	24V DC
	On-State Input Voltage (pin 4)	10…26.4V DC, nominal 24V DC
	Off-State Input Voltage	5V DC
	On-State Input Current (pin 4)	1…3.7 mA, nominal 2.6 mA @ 24V DC
	Off-State Input Current	<1.5 mA
	Maximum Sensor Leakage Current	<2.5 mA
	Maximum Number of Input Devices	6
	Maximum Sensor Sourcing Current (pin 1)	50mA per point (max 300mA total for sourcing one device)
	Sensor Operating Voltage Range	19.2…26V DC
	Input Bounce Filter ❶ (Software Configurable)	Off-On or On-Off: 0.5 ms + 64 ms
	Filtering	100 µs
	DeviceLogix I/O Response	2 ms (500 Hz)
Output	Supply Voltage (Switched Power)	A1/A2
	Type of Outputs	DC sourcing
	Load Types	Resistive or light inductive
	Utilization Category (IEC)	DC-1, DC-13
	Output State	Normally Open (N.O.)
	Connection Type	Single keyed M12, quick disconnect
	Output per Connection	1/each
	Overcurrent Protection ❷	1.5 A (the sum of all outputs cannot exceed this value)
	Rated Insulation Voltage (U_i)	**UL**: 1500V AC, **IEC**: 2000V AC
	Rated Operating Voltage (U_e)	19.2…26.4V DC
	Maximum Blocking Voltage	35V DC
	Nominal Operating Current (I_e)	500 mA per point
	Maximum Thermal Current (I_{the})	500 mA per point
	Maximum Off-state Leakage Current	1 µA
	Maximum Number of Outputs	6
	Surge Suppression	Integrated diode to protect against switching loads

❶ Input ON-to-OFF delay time is the time from a valid input signal to recognition by the module.

❷ If an output exceeds 1.5 A for greater than 7 ms, a fault is generated

Environmental Ratings	
Operating Temperature Range	-20…+40 °C (-4…+104 °F) 50 °C (122 °F) without derating, when properly rated line reactors are installed in branch circuit.
Storage and Transportation Temperature Range	–25...+85 °C (–13…+185 °F)
Altitude	1000 m
Humidity	5…95% (non-condensing)
Pollution Degree	3
Enclosure Ratings	IP66/UL Type 4/12 ❶
Approximate Shipping Weight	7.3 kg (16 lb)

❶ IP66/UL Type 4 is available with gland options G1-3. IP66/ UL Type 4/12 available with G1 and G3 gland option.

Mechanical Ratings					
Resistance to Shock	Operational	30 G (exceeds IEC 61800-5-1)			
	Non-Operational	50 G (exceeds IEC 61800-5-1)			
Resistance to Vibration	Operational	2.5 G, MIL-STD-810G, (exceeds IEC 61800-5-1)			
	Non-Operational	5 G, MIL-STD-810G, (exceeds IEC 61800-5-1)			
Disconnect Lock Out	Maximum of 3/8 in. (9.5 mm) diameter lock shackle or hasp				
Disconnect LOTO Locks	Up to 2 locks or hasps are supported				
Disconnect Mechanical Life	200 000 operations				
	Power Terminals	**Motor Terminals**	**Control Terminals**	**PE/Ground**	**Source Brake**
Wire Size	(2) #18 …#10 AWG (0.8…5.2 mm^2) per terminal	#18…#10 AWG (0.8…5.2 mm^2) per terminal	(2) #18 …#10 AWG (0.8…5.2 mm^2) per terminal	(2) #16 …#10 AWG (1.3…5.2 mm^2) per terminal	#16 …#10 AWG (1.0…4.0 mm^2) per terminal
Wire Type	Multi-strand copper wire				
Tightening Torque	10.6 ± 2 lb•in (1.2 ± 0.2 N•m)			18 ± 2 lb•in (2 ± 0.2 N•m)	4.8 ± 2 lb•in (0.5 ± 0.2 N•m)
Wire Strip Length	0.35 ± 0.01 in. (9 ± 2 mm)				
Power Rating	600V AC/25 Amp VAC	600V AC/10 Amp VAC	600V AC/10 Amp VAC	—	600V AC/10 Amp VAC

Emission and Immunity Ratings		
Emission	Conducted	EN 55011 Class Group 2
	Radiated	
	Electrostatic Discharge	4 kV contact, 8 kV air
	Radio Frequency Electromagnetic Field	EN 61800-3 10V/m, 80 MHz…1 GHz
Immunity	Fast Transient	2 kV (Power) 2 kV (PE) 1 kV (Communication and control)
	Surge Transient	1 kV (12) $_{L-L}$, 2 kV (2) $_{L-N}$ (earth)
	Radio Frequency Conducted Disturbance	10V, 150 kHz…80 MHz

Standards Compliance and Certifications			
	UL/CSA	**EN/IEC**	**Other Agencies**
Standards Compliance	UL 508C Power Conversion Equipment – Suitable for Group Installation CSA C22.2, No. 14	EN 61800 - Adjustable Speed Electrical Power Drive Systems, Part 3: EMC Requirements and Specific Test Methods, CE Marked per EMC Directive 2004/108/EC, Part 5-1: Safety Requirements – Electrical, Thermal and Energy, CE Marked per Low Voltage Directive 2005/95/EC	CCC (Pending) KCC C-Tick ODVA for EtherNet/IP and DeviceNet
Certifications	cULus (File No. E207834, Guides NMMS, NMMS7)		

Communication Ratings		
	Rated Insulation Voltage	250V
	Operating Dielectric Withstand	**UL/NEMA**: 1500V AC, **IEC**: 2000V AC
DeviceNet	DeviceNet Supply Voltage Rating	Range 11…25V DC, 24V DC nominal
	DeviceNet Input Current	50 mA @ 24V DC
	DeviceNet Input Current Surge	500 mA peak inrush
	Baud Rates	125, 250, 500 kbps
	Distance Maximum	500 m (1630 ft) @ 125 kbps 200 m (656 ft) @ 250 kbps 100 m (328 ft) @ 500 kbps
	Auto-Baud Rate Identification	Yes
	"Group 2 - Slave Only" Device Type	Yes
	Polled I/O Messaging	Yes
	Change of State Messaging	Yes
	Cyclic Messaging	Yes
	Explicit Messaging	Yes
	Full Parameter Object Support	Yes
	Group 4 - Off-Line Node Recovery Messaging	Yes
	Configuring Consistency Value	Yes
	Unconnected Messaging Manager (UCMN)	Yes

Communication Ratings		
EtherNet/IP	EtherNet/IP ODVA - Conformance Testing	EtherNet/IP Interoperability Performance – Per A9 PF 2.1
	Ethernet Communication Rate	10/100 Mbps, half or full-duplex
	Ethernet Ports	2 (embedded switch)
	Ethernet Network Topologies Supported	Star, Tree, Linear, and Ring
	Device Level Ring Support	Beacon Performance, IEEE 1583 Transparent Clock
	Ethernet Connector	M12, D code, female, with Ethernet keying, 4 Pin
	Ethernet Cable	Category 5e: Shielded or unshielded
	IP Configuration	Static, DHCP, or BootP
	DHCP Timeout	30 s
	Data	Transported over both TCP and UDP
	Packet Rate (pps)	500 packets-per-second (2000 µs), Tx 500 packets-per-second (2000 µs), Rx
	Consume Instance (Command)	Default of 4 words (Instance 154)
	Produce Instance (Status)	Default of 16 words (Instance 156)
	Message Support	Unicast or Multicast
	Address Conflict Detection (ACD)	IP v4 Address Conflict Detection for EtherNet/IP devices
	Sockets	150 maximum
Web Server	Security	Login and password configurable
	E-mail	Support Simple Mail Transfer Protocol (SMTP)
	Webpage Features	Status, diagnostics, configuration
	Concurrent Sessions	20
	Web Server	HTTP 1.1
Network Connections	Concurrent TCP Connections	Maximum of 5 encapsulated messages over both TCP and UDP
	Maximum I/O Connections (CIP Class 1)	Supports up to 2 Class 1 CIP connections [Exclusive owner (data) or listen-only]. One connection per PLC. Listen-only connection requires a data connection to be established.
	Maximum Concurrent Explicit Messages (CIP Class 3)	6
	Class 1 Connection API	2…3200 ms
	Class 3 Connection API	100…10 000 ms
	Request Packet Interval (RPI)	20 ms default (2 ms minimum)

Motor Overload Trip Curves

Motor overload current parameter provides class 10 overload protection. Ambient insensitivity is inherent in the electronic design of the overload.

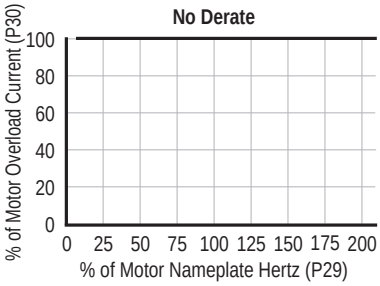

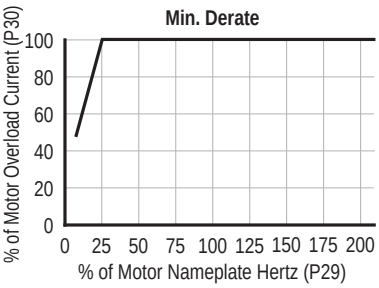

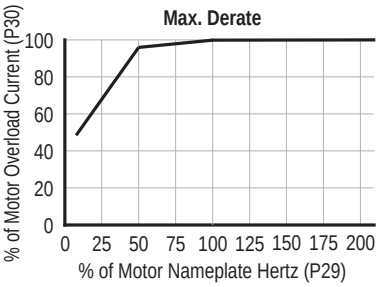

Applying More Than One ArmorStart LT Motor Controller in a Single Branch Circuit on Industrial Machinery

Introduction

Each ArmorStart LT motor controller is listed for group installation. This appendix explains how to use this listing to apply ArmorStart LT motor controllers in multiple-motor branch circuits according to 7.2.10.4(1) and 7.2.10.4(2) of NFPA 79, Electrical Standard for Industrial Machinery.

From the perspective of the ArmorStart LT product family, being listed for group installation means one set of fuses or one circuit breaker may protect a branch circuit that has two or more of these motor controllers connected to it. This appendix refers to this type of branch circuit as a multiple-motor branch circuit. The circuit topology shown in Figure 40, is one configuration, but not the only possible configuration, of a multiple-motor branch circuit. In these circuits, a single set of fuses (or a single circuit breaker) protects multiple motors, their controllers and the circuit conductors. The motors may be any mixture of power ratings and the controllers may be any mixture of motor controller technologies (magnetic motor controllers and variable-frequency AC drive controllers).

This appendix addresses only NFPA 79 applications. This is not because these products are only suitable for industrial machinery, but because industrial machinery is their primary market. In fact, while all versions of the ArmorStart LT products may be applied on industrial machinery, the versions that have the Conduit Entrance Gland Plate Option may also be used in applications governed by NFPA 70, National Electrical Code (NEC), (see "ArmorStart LT Product Family").

In the 2012 Edition of NFPA 79, motor controllers that are listed for group installation may be installed in multiple-motor branch circuits according to either of two alternative sets of requirements. The first is found in 7.2.10.4(2), the second in 7.2.10.4(3). The requirements of 7.2.10.4(3) are similar to those in 430.53(C) of NFPA 70, while the requirements of 7.2.10.4(2) are found only in NFPA 79. This appendix explains the requirements of 7.2.10.4(2), rather than those of 7.2.10.4(3), because this is the simpler method to use when applying the ArmorStart LT family of motor controllers.

The user must determine the requirements – NFPA 79 or NFPA 70 – to use for the application. When making this determination, it is necessary to understand the ArmorStart LT product characteristics and useful to understand the definition of industrial machinery. The section of this appendix, "ArmorStart LT Product Family", specifies whether a motor controller is suitable for installation according to NFPA 79 or NFPA 70 (or both). The definition

of industrial machinery is found in 3.3.56 of NFPA 79 and 670.2 of Article 670, Industrial Machinery, in NFPA 70.

These conventions are used throughout this appendix. First, although all of the equipment is connected to a three-phase electrical supply, all of the figures are shown as one-line diagrams. Second, although all of the ArmorStart LT motor controllers are listed for group installation with both fuses and a specific family of inverse time circuit breakers, this appendix considers only fuses. This is done to avoid repetitive explanations with minor, but necessary qualifications, for circuit breakers. Generally, the principles for selecting the fuses also apply to selecting inverse time circuit breakers. Third, all references unless indicated otherwise, are to NFPA 79 – 2012.

Figure 40 - ArmorStart LT NFPA 79 Multi-Motor Branch Circuit

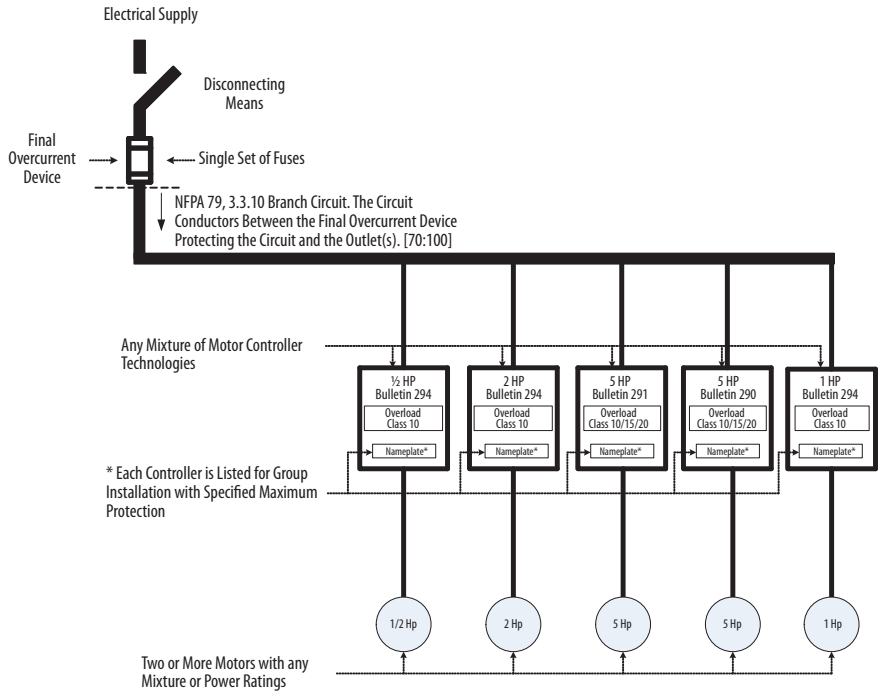

ArmorStart LT Product Family

This section contains a brief description of the attributes of the ArmorStart LT motor controllers that are relevant to applying them in multiple-motor branch circuits.

The term motor controller refers to the device that stops and starts the motor. The ArmorStart LT product family consists of two types of motor controllers. The Bulletin 290D and 291D controllers are magnetic motor controllers that use an electromechanical contactor to stop and start the motor. The Bulletin 294D motor controllers use a variable-frequency AC drive to stop, start and vary the speed of the motor. This appendix refers to the Bulletin 290D, 291D and 294D products as either motor controllers or just controllers.

Each ArmorStart LT motor controller incorporates an integrated overload relay and motor disconnecting means. The Underwriters Laboratories' (UL) listing for each motor controller confirms that the motor controller — including its integral overload relay and motor disconnecting means — is suitable for motor group installation.

The suitability of each ArmorStart LT motor controller for installation according to either NFPA 79 or NFPA 70 depends on the means of connecting the power circuit wiring. All of the controllers are suitable for installation in multiple-motor branch circuits on industrial machinery according to 7.2.10.4 of NFPA 79. The controllers that have the Conduit Entrance Gland Plate Option are also suitable for installation in multiple-motor branch circuits according to 430.53(C) and 430.53(D) of NFPA 70 (NEC). The controllers that have the Power Media Gland Plate Option are suitable for installation only on industrial machinery. These versions are limited to industrial machinery because the UL listing for the power media connectors themselves and their matching cable assemblies covers installation only on industrial machinery.

Multiple-Motor Branch Circuits and Motor Controllers Listed for Group Installation – General

Multiple-motor branch circuits, like that shown in Figure 40, have this fundamental tradeoff: protecting more than one controller with a single set of fuses requires more electrical and mechanical robustness in each controller.

In exchange for eliminating the cost and space necessary for a dedicated set of fuses in front of each controller, the construction of each controller itself must be more robust. For the circuit configuration shown in Figure 40 to be practical, the ampere rating of the fuse must be large enough to operate all of the motors, without opening, under normal starting and running conditions. This rating of fuse must be larger than the rating permitted to protect a circuit that supplies only a single motor and its controller. In general, as the rating of the fuse increases, so does the magnitude of fault currents that flow until the fuse opens. This higher magnitude of fault current results in more damage to the controller. Therefore, the additional controller robustness is necessary to withstand these higher fault currents, without controller damage, that could result in a shock or fire hazard.

Consequently, to the controller, being listed for group installation mostly means the UL testing is performed with fuses that have this practical, and higher, ampere rating. This testing verifies that it is safe to apply this controller in a multiple-motor branch circuit, provided the fuse is of the same class and does not have a rating exceeding that marked on the controller.

The example in Figure 41, illustrates this increase in the maximum ampere rating of fuse that is permitted to protect a controller. This example compares the rating of the fuse used in the UL testing of two variable-frequency AC drive-based motor controllers. Both controllers have a rated power of ½ horsepower and a rated output current of 1.5 amperes. The controller shown on the left is intended for installation in individual-motor branch circuits. The controller shown on the right is the ArmorStart LT Bulletin 294D controller that must be listed for group

installation to be installed, as intended, in multiple-motor branch circuits. For this example, assume all testing is done with fuses of the same class.

The UL investigation of both controllers is done according to UL 508C, Power Conversion Equipment. The controllers are connected to the test supply through the three-phase conductors and equipment grounding conductor and then covered with cotton in areas that are likely to vent hot gases and sparks during the tests. During the test, electrical faults are impressed on the output of, and internal to, these variable-frequency AC drive-based controllers. Increasing the ampere rating of the fuses increases the magnitude of the fault currents that flow through and damage the controller before the fuses open. Afterwards, the damage to the controller is evaluated to determine whether a potential shock or fire hazard exists when protected by fuses having this ampere rating. One criterion of the evaluation is the examination of the equipment grounding conductor that must not open during the test, as this could leave exposed conductive parts in an energized state (shock hazard). Another criterion is that the cotton must not ignite, as this indicates the expulsion from the controller of hot gases or molten metal fragments (fire hazard).

Referring to the controller on the left, UL 508C permits the individual-motor testing to be performed with the maximum rating of fuse that can be used to protect an individual-motor branch circuit. According to both NFPA 70 and NFPA 79, this is 400 percent of the full-load current rating of the largest motor that the controller can supply. In UL 508C, this is taken to be 400 percent of the rated output current of the controller, or 6 amperes.

Referring to the controller on the right, UL 508C permits the group installation testing to be performed with the maximum rating of fuse that can be used to protect a multiple-motor branch circuit. According to both NFPA 70 [430.53(C)) and NFPA 79 (7.2.10.4(3)], this is 250 amperes. This value, derived from the installation requirements of 430.53(C) and 430.53(D) of NFPA 70, is determined by the largest size of power conductor that the ArmorStart LT controller can accept, 10 AWG. Because the UL 508C test covers all possibilities in NFPA 70 and NFPA 79, it permits the maximum value of 250 amperes. This covers 7.2.10.4(2), which permits only 100 amperes. However, in this case, the manufacturer, Rockwell Automation, chose to test and mark with the lower value of 45 amperes. This value was chosen as the tradeoff between the maximum number and type of controllers in the branch circuit — limited by the maximum fuse rating — and the electrical and mechanical robustness engineered into each controller.

Therefore, to make its use in the multiple-motor branch circuit of Figure 40 practical, the ½ horsepower Bulletin 294D controller was engineered to be robust enough to safely contain the damage when protected by a fuse having a rating of 45 amperes, rather than just 6 amperes.

Figure 41 - UL508C Variable-Frequency AC Drive Motor Controller Evaluation

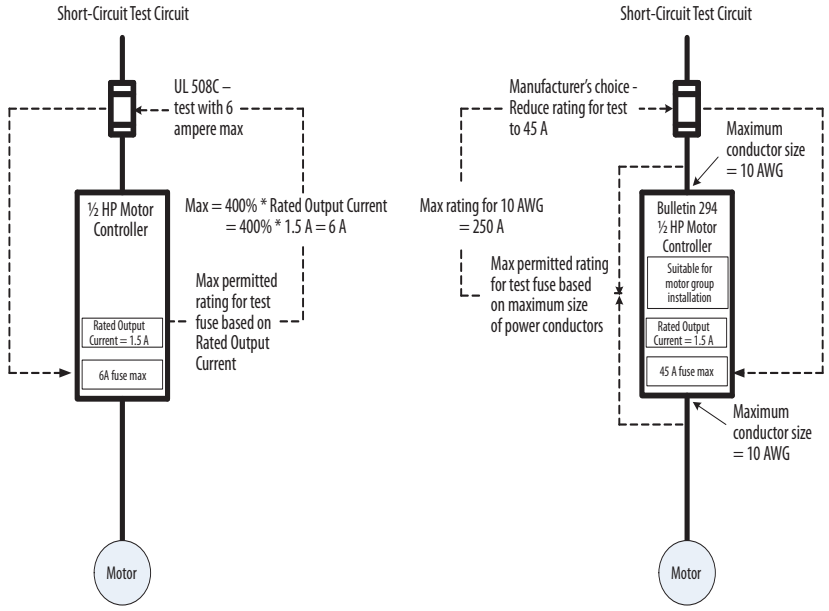

Maximum Fuse Ampere Rating According to 7.2.10.4(1) and 7.2.10.4(2)

This section uses Figure 42 to explain the requirements from 7.2.10.4(1) and 7.2.10.4(2) that are relevant to, and permit, the multiple-motor branch circuit of Figure 40.

The following is the complete text of 7.2.10.4(1) and 7.2.10.4(2) and an abbreviated version of Table 27 from the 2012 Edition of NFPA 79. The table is abbreviated to cover the size of conductors that are generally relevant to the ArmorStart LT motor controllers.

Complete Text -

"7.2.10.4 Two or more motors or one or more motor(s) and other load(s), and their control equipment shall be permitted to be connected to a single branch circuit where short-circuit and ground-fault protection is provided by a single inverse time circuit breaker or a single set of fuses, provided the following conditions under (1) and either (2) or (3) are met:

(1) Each motor controller and overload device is either listed for group installation with specified maximum branch-circuit protection or selected such that the ampere rating of the motor branch short-circuit and ground-fault protective device does not exceed that permitted by 7.2.10.1 for that individual motor controller or overload device and corresponding motor load.

(2) The rating or setting of the branch short-circuit and ground-fault protection device does not exceed the values in Table 27 for the smallest conductor in the circuit."

(3) ...(not considered in this appendix)

Table 27 - Abbreviated Table 7.2.10.4

Table 7.2.10.4 Relationship Between Conductor Size and Maximum Rating or Setting of Short-Circuit Protective Device for Power Circuits Group Installations

Conductor Size (AWG)	Maximum Rating Fuse or Inverse Time* Circuit Breaker (amperes)
…	…
…	…
14	60
12	80
10	100
8	150
6	200
…	…

The following text and Figure 42 provide an explanation of 7.2.10.4(1) and (2). In the following, the text not relevant to Figure 40 is replaced by ellipsis points (...). Then each individual requirement is underlined and followed by an underlined letter in parentheses. This underlined letter in the following text corresponds to the letter in Figure 42.

"7.2.10.4 Two or more motors (a)...and their control equipment (b) shall be permitted to be connected to a single branch circuit (c) where short-circuit and ground-fault protection is provided by a single inverse time circuit breaker or a single set of fuses (d), provided the following conditions under (1) and...(2)... are met:

(1) Each motor controller and overload device is... listed for group installation with specified maximum branch-circuit protection (e) ...

(2) The rating or setting of the branch short-circuit and ground-fault protection device does not exceed the values in Table 7.2.10.4 for the smallest conductor in the circuit." (f)

Summarizing the requirements relevant to Figure 40: 7.2.10.4(1) and 7.2.10.4(2) permit two or more ArmorStart LT motor controllers to be installed in a single branch circuit provided (1) all the motor controllers are listed for group installation, (2) the fuse does not exceed the maximum rating that Table 27 permits to protect the smallest conductor and (3) the fuse complies with the maximum fuse ratings of all of the controllers.

Figure 42 - ArmorStart LT NFPA 79 Multi-Motor Branch Circuit

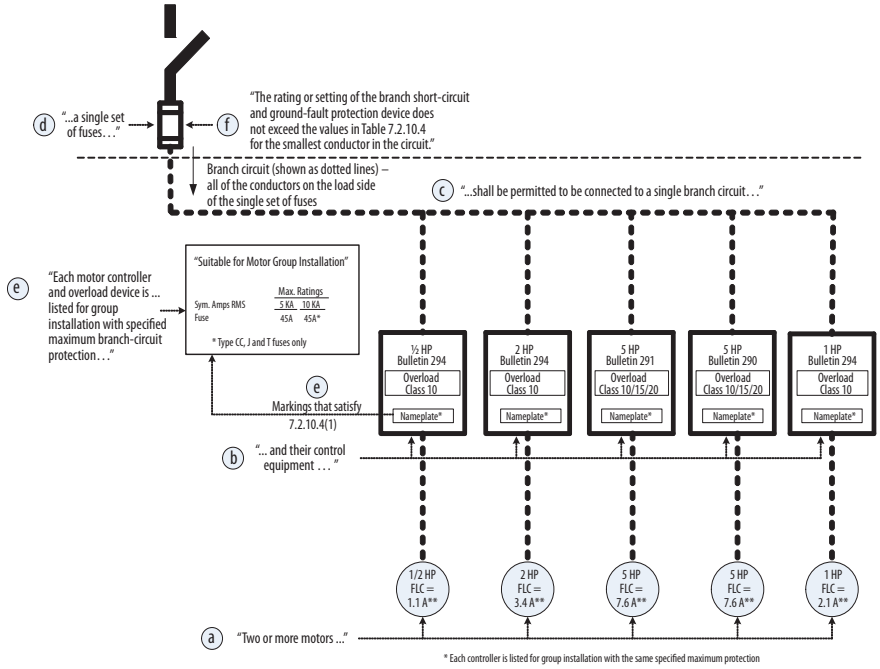

Explanatory Example

The example addresses the overcurrent protection of the conductors, controllers and motors. Protection for three overcurrent conditions is considered: motor running overloads, short-circuit (line-to-line) faults, and ground-faults (line-to-ground). The short-circuit fault and ground-fault protection is governed by 7.2.10.4(1) and 7.2.10.4(2) and explained in Requirements 1,2 and 3 and Figure 43. The overload protection, explained in Requirement 4, is governed by 7.3.1 and 7.3.1.1. Overload coordination depends on each conductor having the minimum ampacity given by 12.5.3 and 12.5.4. The method for determining this minimum ampacity is explained in Requirement 5 and Figure 44.

The example branch circuit is shown in Figure 43 and Figure 44. The circuit topology consists of a set of 10 AWG conductors that supply multiple sets of 14 AWG conductors. Each set of 14 AWG conductors supply a controller and motor. These conductor sizes are chosen to be the smallest conductors that have sufficient ampacity, without derating, for the loads each must carry. All of the wiring is customer-supplied, rather than the ArmorConnect Power Media, because all controllers have the Conduit Entrance Gland Plate Option. Fuses protect the branch circuit.

The example addresses five basic requirements that the motor controllers, fuses and conductors must satisfy. The letters in the circles on Figure 43 and Figure 44 are referenced in the explanations as letters in parentheses. Ellipses points (...) are used to replace NFPA 79 text that is not applicable to the multiple-motor branch circuit shown in Figure 43 and Figure 44. Unless indicated, all text is from NFPA 79.

Figure 43 - ArmorStart LT NFPA 79 Multi-Motor Branch Circuit — Conductor and Controller Protection

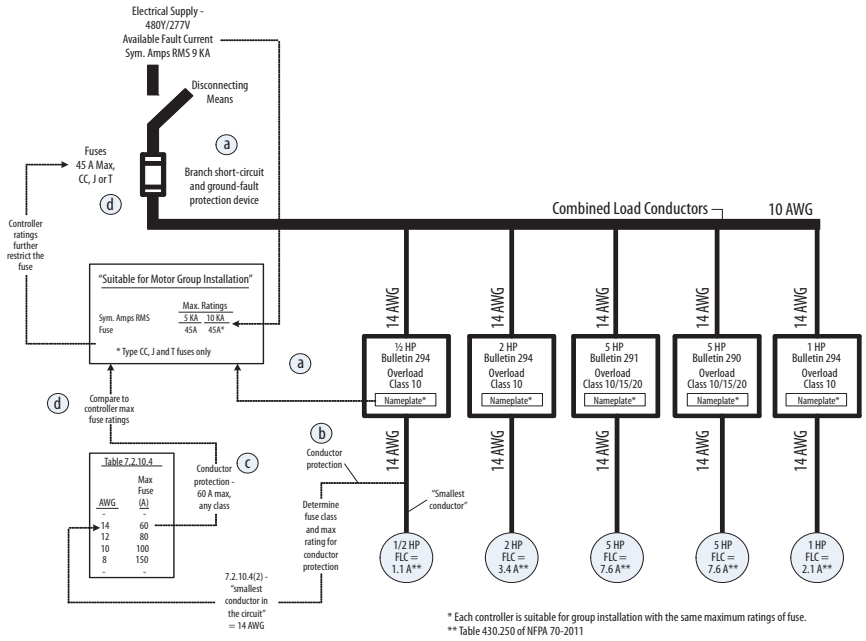

Figure 44 - ArmorStart LT NFPA 79 Multi-Motor Branch Circuit Minimum Conductor Ampacity

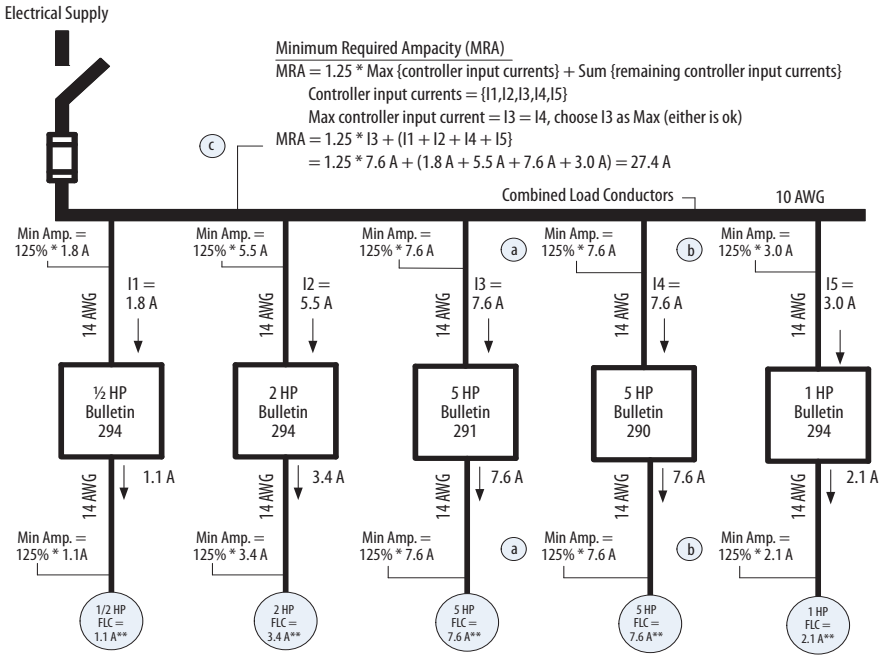

1. Requirement One: Controller Ratings — The motor controllers and overload relays must be listed for group installation with specified maximum branch-circuit protection.

Text: "7.2.10.4(1) Each motor controller and overload device is... listed for group installation with specified maximum branch-circuit protection..."

Analysis: To apply the ArmorStart LT motor controllers in the multiple-motor branch circuit shown in Figure 43, 7.2.10.4(1) must be satisfied; each controller must be listed for group installation with specified maximum branch-circuit protection. The UL listing for each ArmorStart LT motor controller confirms that it – including its integral overload relay and motor disconnecting means — is suitable for motor group installation with specified fuses, satisfying 7.2.10.4(1). The Bulletin 290D and 291D controllers are listed for group installation according to UL 508, Industrial Control Equipment. The Bulletin 294D controllers are listed for group installation according to UL 508C, Power Conversion Equipment.

Referring to Figure 44 (a) indicates the markings on the nameplate that satisfy 7.2.10.4(1). The marking "Suitable for Motor Group Installation" satisfies the requirement to be listed for group installation. The ratings located beneath the description "Max. Ratings" are the specified maximum branch circuit protection. The (a) beside the fuse(s) indicates that the maximum protection specified on the nameplate applies to these fuse(s).

2. Requirement Two: Conductor Short-circuit and Ground-Fault Protection — The fuse must protect the conductors for short-circuit faults and ground faults.

Text: "7.2.10.4(2) The rating or setting of the branch short-circuit and ground-fault protection device does not exceed the values in Table 27 for the smallest conductor in the circuit."

Analysis: Referring to Figure 43, 7.2.10.4(2) must be satisfied. The fuse, as indicated by the description in Figure 43 (a), is the branch short-circuit and ground-fault protection device. The word circuit means the branch circuit. The conductors of the branch circuit start at the load side of the fuses and end at the input to the motor, including the conductors between the motor controllers and the motor. The smallest conductor in the circuit is any one of the 14 AWG conductors that supply each controller and motor. The note at (b) indicates the conductor protection is based on the smallest conductor, 14 AWG. Referring to Table 27 a 14 AWG conductor may be used in a circuit that is protected by a fuse of any class having a rating of 60 amperes or less (c). Therefore, selecting a fuse of any class with a maximum rating of 60 amperes satisfies the conductor protection requirement of 7.2.10.4(2).

Supplementary Note 1: The value specified in Table 27 is the maximum rating of fuse that 7.2.10.4(2) permits to protect that size of conductor. The rating of the fuse may be set to the maximum value given by Table 27 for the smallest conductor without further justification. However, if any controller, or other component, has a maximum rating of fuse that is less than the Table 27 value, the

maximum rating of the fuse protecting the branch circuit must be reduced to the lower value so that all components are applied according to their ratings. For example, as shown in Requirement Three, a lower value may be necessary to protect the motor controller within its ratings because its specified maximum protection is less than the rating that Table 27 permits for the smallest circuit conductor. Another reason to use a lower rating of fuse is to provide more conservative conductor and controller protection. However, in all cases it is important to ensure the ampere rating is sufficient to start and operate the motors without nuisance opening of the fuse(s).

Supplementary Note 2: The note at (b) points to the conductor on the output of the ½ Hp Bulletin 294E controller in order to emphasize that the smallest conductor in the circuit includes the conductors between each controller and motor. This includes the output of the variable-frequency AC drive-based Bulletin 294E controllers; even though these drives have electronic short-circuit protection. According to NFPA 79, the fuse, and not the drive's electronic short-circuit protection, provides the short-circuit fault and ground-fault protection for these output conductors.

Supplementary Note 3: Generally, connecting a smaller conductor to a larger conductor requires the installation of fuses at the connection. This connection may be made without this fuse, in some cases, through the use of a tap rule that indirectly protects the smaller conductor by limiting two things: the ratio of the ampacity of the larger conductor to the ampacity of the smaller conductor and the maximum length of the smaller conductor (see, for example, 7.2.8.2). When applying 7.2.10.4(2), such a tap rule is neither applicable nor necessary. In Figure 43, the smaller 14 AWG conductors may be connected to combined load conductors of any size because 7.2.10.4 does not indirectly protect the smaller conductor by limiting the ratio of the larger to smaller conductor ampacities and the conductor length. Instead, Table 27 protects the smallest conductor directly by specifying the maximum rating of fuse that may protect a branch circuit that contains a conductor of that size.

3. Requirement Three: Controller Short-Circuit and Ground-Fault Protection — Each motor controller must be protected according to its own ratings, that is, applied in accordance with its listing.

Text: "(1) Each motor controller and overload device is... listed for group installation with specified maximum branch-circuit protection..."

Analysis: See (d) in Figure 43. The characteristics of the fuse(s) permitted to protect the conductors (see Requirement 2) must now be compared to those in the controller's ratings. To comply with the listing of each motor controller and overload relay, the fuse(s) must comply with the maximum branch-circuit protection specified in the controller markings. Therefore, the fuse(s) must be of a class marked on all of the controllers and the rating of the fuse(s) must not exceed the rating marked on any of the controllers. The markings of each controller specify that a fuse having a maximum rating of 45 A may protect the motor controller. When connecting to an electrical supply having an available fault current of 5000 amperes or less, the class of the fuse is not specified and may be any class. When connecting to an electrical supply having an available fault

current between 5000 and 10000 amperes, the class of the fuse must be CC, J or T. Since the electrical supply has an available fault current of 9000 amperes, selecting a Class CC, J or T fuse with a rating of 45 A or less ensures each motor controller is applied within its own ratings.

Supplementary Note 1: The rating of the fuse must not exceed the rating permitted by 7.2.10.4(2) to protect the smallest conductor in the circuit. Selecting a Class CC, J or T fuse with a rating of 45 amperes, being less than 60 amperes, also protects the conductors (see Requirement 2). Although the ArmorStart LT products presently have a maximum fuse rating of 45 A, future controllers may have maximum fuse ratings that exceed 60 A. In this case, the maximum rating of fuse is limited by the rating to protect the 14 AWG conductors, 60 A. The maximum rating permitted for the controller, 45 A, is a maximum rating and can be reduced, for more conservative protection, provided nuisance opening of the fuses do not occur.

Supplementary Note 2: In this appendix, a fuse having a rating of any class means a fuse having the let-through characteristics of an Class RK-5 fuse. Class RK-5 fuses are assumed to have the maximum let-through of any class of fuse. For this reason, the ArmorStart LT motor controllers that are marked for use with fuses, without a restriction to a particular class, have been tested with and are intended to be used with fuses having a class of RK-5. Of course, fuses of a class that have lower let-throughs than Class RK-5, such as Class CC, J or T, are also acceptable. A fuse having a rating of any class also restricts the fuse to those that have been evaluated for use as branch-circuit protection devices. This means that semiconductor fuses, used to protect power electronic equipment, or supplemental fuses cannot be used to protect the multiple-motor branch circuit.

Supplementary Note 3: There are four complementary ratings relevant to the "specified maximum branch-circuit protection" of 7.2.10.4(1). They are: the fuse class, the maximum fuse rating, the voltage rating and connection of the source (480Y/277 V), and the available fault current of the source. Applying the controllers according to these four ratings means that a fault on the output of all the controllers, and internal faults for Bulletin 294 controllers, will not result in a shock or fire hazard.

Supplementary Note 4: In this example, the assumption is made that the available fault current at the controller is that of the source on the line side of the fuses. Although it is true that the wiring impedance between the fuses and the first controller reduce the fault current available at the controllers, this reduction is neglected by assuming the first controller, the ½ horsepower Bulletin 294 controller, is very close to the fuses.

4. Requirement Four: Overload Protection — The motors, conductors and controllers must be protected against motor overload conditions.

Text:

"7.3.1 General. Overload devices shall be provided to protect each motor, motor controller, and branch-circuit conductor against excessive heating due to motor overloads or failure to start."

"7.3.1.1 Motors. Motor overload protection shall be provided in accordance with Article 430, Part III, of NFPA 70."

Analysis: Each ArmorStart LT motor controller incorporates an integral overload relay. This overload function must be set in accordance with Article 430, Part III of NFPA 70. Selecting the ampacity of the circuit conductors appropriately (see Requirement 5) ensures the overload relays, when set according to 7.3.1.1, will protect the conductors against overheating due to motor overloads.

Supplementary Note: Each individual controller overload relay directly protects the conductors connected to the input and output of that controller and the motor that the controller supplies. The combined load conductor is protected by the tripping of one or more of the controller overload relays, which remove(s) the overloaded motor(s) before the combined load conductor overheats.

5. Requirement: Conductor Ampacity —The minimum ampacity of conductors.

Text:

"12.5.3 Motor circuit conductors supplying a single motor shall have an ampacity not less than 125 percent of the motor full-load current rating."

"12.5.4 Combined load conductors shall have an ampacity not less than ... 125 percent of the full-load current rating of the highest rated motor plus the sum of the full-load current ratings of all other connected motors..."

Analysis: Referring to Figure 44, (a), (b) and (c) explain the method for calculating the minimum required conductor ampacity for each of these conductors: input and output conductors of Bulletin 290D and 291D controllers (a), input and output conductors of Bulletin 294D controllers (b) and combined load conductors that supply Bulletin 290D, 291D and 294D controllers (c). The currents I1 through I5 are the input currents to the controllers. For the Bulletin 290D and 291D controllers, these are the same as the output motor currents. For the Bulletin 294D controllers, these currents are the rated input currents.

The example does not address conditions of use such as an ambient temperature exceeding 30 °C or more than three current-carrying conductors in a cable or raceway. In a particular application, these conditions of use may require derating of the ampacity given in Table 12.5.1. This example assumes that, under the conditions of use, both conductors have sufficient ampacity for the application. This means the 14 AWG conductors have an ampacity of no less than 9.5 A and the 10 AWG conductors have an ampacity of no less than 27.4 A.

Input and Output Conductors of Bulletin 290D and 291D Controllers (a)

For Bulletin 290D and 291D controllers, which use an electromechanical contactor to control the motor, the input current, like the output current, is just the current to the motor. Therefore, the minimum conductor ampacity for both input and output conductors is 125 percent of the motor full-load current rating, as specified in the text of 12.5.3 (a).

Referring to Figure 44, the full-load current rating of a three-phase, 460 V, 5 Hp induction motor is 7.6 amperes. Using this value, both the input and output conductors must have an ampacity that is not less than 125% of 7.6 A or 9.5 A.

Input and Output Conductors of Bulletin 294D Controllers (b)

The Bulletin 294D controllers use a variable-frequency AC drive to control the motor. These drives use a power conversion method that generates input currents that are larger than the output currents. The input currents are larger because, unlike the output currents to the motor, they are not sinusoidal. Consequently, when determining the minimum ampacity of the input conductors, the requirement of 12.5.3 must be based on the rated input current of the controller, rather than the full-load current rating of the motor. Therefore, the minimum ampacity of the input conductors must be 125% of the controller rated input current, while that of the output conductors must be 125% of the motor full-load current rating.

Referring to Figure 44, the 1 Hp Bulletin 294D controller has a rated input current of 3.0 amperes. Using the rated input current, the conductors from the combined load conductors to the controllers must have an ampacity of 125% of 3.0 A or 3.75 A. The output conductors must have an ampacity of 125% of 2.1 A or 2.6 A.

Combined Load Conductors (c)

The requirement for the minimum ampacity of the combined load conductors is given by 12.5.4. When the combined load conductors supply one or more Bulletin 294D controllers, the minimum ampacity calculation of 12.5.4 must be made by substituting the rated input current of the Bulletin 294D controllers for the full-load current rating of the motors that these controllers supply.

In Figure 44, the currents I1, I2, I3, I4 and I5 are the input currents to each controller. I3 and I4 are the full-load current ratings of the 5 Hp motors. I1, I2 and I5 are the rated input currents of the Bulletin 294D controllers. Referring to the explanatory text (c) in Figure 44, the method for calculating the minimum ampacity of the combined load conductors follows: first, multiply the largest input current to any controller – Bulletin 290D, 291D or 294D - by 125%. In this case, the input currents to the Bulletin 290D and 291D controllers, I3 and I4, are the largest, 7.6 A. Because they are the same, either can be used. Choose I3 to calculate 125% of the maximum. 125% of 7.6 A is 9.5 A. Second, sum the remaining input currents (I1, I2, I4, I5) for a total of 17.9 A. Third, add the result from the first step to the result from the second for a total of 27.4 A. Finally, the minimum ampacity of the combined load conductors is 27.4 A.

Supplementary Note 1: The input currents to the Bulletin 294D motor controllers are larger than the output currents to the motor because the input currents contain harmonics resulting from the power conversion process. This harmonic content and the magnitude of the resulting non-sinusoidal input currents depend on the impedance of the electrical supply. The value specified for the rated input current is the maximum value over the range of possible supply impedances. For this reason, the magnitude of current measured on a particular electrical system may be less than the specified value.

CIP Information

High Level Product Description

The ArmorStart LT EtherNet/IP is an extension of the ArmorStart LT DeviceNet. Three product types offered:

Table 28 - ArmorStart LT Distributed Starter Type

Bulletin Number	Distributed Starter Type
290D	DOL
291D	Reversing
294D	V/Hz

Product Codes and Name Strings

The following table lists the product codes and name strings that will be on the ArmorStart LT product family.

Table 29 - Product Codes and Name Strings

Product Code	Current Rating	Identity Object Name String	Integrated Power Supply
0x201	0.24…3.5 amps	ArmorStart 290D 0.24…3.5 A	No
0x202	1.1…7.6 amps	ArmorStart 290D 1.1…7.6 A	No
0x211	0.24…3.5 amps	ArmorStart 290DP 0.24…3.5 A	Yes
0x212	1.1…7.6 amps	ArmorStart 290DP 1.1…7.6 A	Yes
0x241	0.24…3.5 amps	ArmorStart 291D 0.24…3.5 A	No
0x242	1.1…7.6 amps	ArmorStart 291D 1.1…7.6 A	No
0x251	0.24…3.5 amps	ArmorStart 291DP 0.24…3.5 A	Yes
0x252	1.1…7.6 amps	ArmorStart 291DP 1.1…7.6 A	Yes
0x2C2	0.5…2.5 amps	ArmorStart 294D 0.5 Hp	No
0x2C4	1.1…5.5 amps	ArmorStart 294D 1.0 Hp	No
0x2C6	3.2…16 amps	ArmorStart 294D 2.0 Hp	No
0x2D2	0.5…2.5 amps	ArmorStart 294DP 0.5 Hp	Yes
0x2D4	1.1…5.5 amps	ArmorStart 294DP 1.0 Hp	Yes
0x2D6	3.2…16 amps	ArmorStart 294DP 2.0 Hp	Yes

CIP Explicit Connection Behavior

The ArmorStart LT allows run, jog and user outputs to be driven by connected explicit messages when no I/O connection exists, or when a I/O connection exists in the idle state. a single EtherNet/IP Class 3 explicit connection will be allowed to send "explicit control" messages via an "Active Explicit" connection. An EtherNet/IP Class 3 explicit connection becomes the "explicit control" connection when it becomes the first EtherNet/IP Class 3 explicit connection to send a "set" service to one of the following:

- The "value" attribute of any Discrete Output Point (DOP) instance (Class Code 0x09).
- The "data" attribute of any output (consumed) Assembly instance (Class Code 0x04).
- Attribute 3 or 4 of the Control Supervisor Object (Class Code 0x29).

EDS Files

The information contained in the EDS (Electronic Data Sheet) files for ArmorStart LT DeviceNet can be extracted via the network.

CIP Object Requirements

The following CIP objects will be covered in the following subsections:

Class	Object
0x0001	Identity Object
0x0002	Message Router
0x0003	DeviceNet
0x0004	Assembly Object
0x0005	Connection Manager Object
0x0008	Discrete Input Point Object
0x0009	Discrete Output Point Object
0x000A	Analog Input Point
0x000B	Analog Output Point
0x000F	Parameter Object
0x0010	Parameter Group Object
0x001D	Discrete Input Group Object
0x001E	Discrete Output Group Object
0x0029	Control Supervisor
0x002C	Overload Object
0x0097	DPI Fault Object
0x098	Alarm Object
0x0376	Trip and Warning Email Object
0x032F	Email Object

Identity Object

CLASS CODE 0x0001

The following class attributes are supported for the Identity Object:

Attribute ID	Access Rule	Name	Data Type	Value
1	Get	Revision	UINT	1
2	Get	Max Instance	UINT	1 for DOL/Reverser; 2 for VFD

One instance of the Identity Object will be supported for Bulletin 290D and Bulletin 291D; 2 for Bulletin 294D. The following table shows what each instance will represent.

Instance	Name	Revision Attribute
1	Main Control Board	The firmware rev of the main control board operating system
2	PowerFlex 4M (294D only)	The firmware revision of the PowerFlex 4M

Each instance of the Identity Object will contain the following attributes:

Attribute ID	Access Rule	Name	Data Type	Value
1	Get	Vendor	UINT	1
2	Get	Device Type	UINT	22
3❶	Get	Product Code	UINT	Product Code specific.
4	Get	Revision Major Revision Minor Revision	Structure of: USINT USINT	
5	Get	Status	WORD	Bit 0 - 0 = Not Owned; 1 = Owned by Master Bit 2 - 0 = Factory Defaulted; 1 = Configured Bits 4-7 – Extended Status (see table below) Bit 8 - Minor Recoverable fault Bit 9 - Minor Unrecoverable fault Bit 10 - Major Recoverable fault Bit 11 - Major Unrecoverable fault
6	Get	Serial Number	UDINT	Unique number for each device
7❶	Get	Product Name String Length ASCII String	Structure of: USINT STRING	Product Code specific
8	Get	State	USINT	Returns the value 3 = Operational
9	Get	Configuration Consistency Value	UINT	Unique value depending on output of the parameter checksum algorithm.
102	Get	Build	UDINT	Firmware Build Number

❶ See product code definitions in Table 29, Product Codes and Name Strings.

Extended Device Status Field (bits 4-7) in “Status” Instance Attribute 5.

Value	Description
0	Self-testing or unknown
1	Firmware update in progress
2	At least one faulted I/O connection
3	No I/O connections established

Value	Description
4	Non-volatile configuration bad
5	Major fault – either bit 10 or bit 11 is true (1)
6	At least one I/O connection in run mode
7	At least one I/O connection established, all in idle mode

The following common services will be implemented for the Identity Object:

Service Code	Implemented for:		Service Name
	Class	Instance	
0x01	No	Yes	Get_Attributes_All
0x05	No	Yes	Reset
0x0E	Yes	Yes	Get_Attributes_Single
0x010	No	Yes	Set_Attributes_Single

Message Router

CLASS CODE 0x0002

No class or instance attributes will be supported. The message router object exists only to route explicit messages to other objects.

DeviceNet Object

CLASS CODE 0x0003

The following class attributes will be supported for the DeviceNet Object:

Attribute ID	Access Rule	Name	Data Type	Value
1	Get	Revision	UINT	2

A single instance (instance 1) of the DeviceNet Object will be supported. The following instance attributes will be supported.

Attribute ID	Access Rule	Name	Data Type	Value
1	Get/Set	Node Address	USINT	0 - 63
2	Get/Set	Baud Rate	USINT	0 = 125K 1 = 250K 2 = 500K
5	Get	Allocation Info Allocation Choice Master Node Addr	Structure of: BYTE USINT	Allocation_byte❶ 0 - 63 = address 255 = unallocated
6	Get	MAC ID Switch Change	BOOL	
8	Get	MAC ID Switch Value	USINT	0 - 63

❶ Allocation_byte
Bit 0 Explicit messaging
Bit 1 Polled I/O
Bit 4 COS I/O
Bit 5 Cyclic I/O
Bit 6 Acknowledge Suppression

The following services will be implemented for the DeviceNet Object.

Service Code	Implemented for:		Service Name
	Class	Instance	
0x0E	Yes	Yes	Get_Attribute_Single
0x10	No	Yes	Set_Attribute_Single

Assembly Object

CLASS CODE 0x0004

The following class attribute is supported for the Assembly Object:

Attribute ID	Access Rule	Name	Data Type	Value
1	Get	Revision	UINT	2

The following static Assembly instance attributes will be supported for each Assembly instance:

Attribute ID	Access Rule	Name	Data Type	Value
1	Get	Number of Members in Member List	UINT	—
2	Get	Member List	Array of STRUCT	Array of CIP paths
		Member Data Description	UINT	Size of Member Data in bits
		Member Path Size	UINT	Size of Member Path in bytes
		Member Path	Packed EPATH	Member EPATHs for each assembly instance
3	Conditional	Data	Array of BYTE	—
4	Get	Size	UINT	Number of bytes in attribute 3
100	Get	Name String	STRING	—

The following services will be implemented for the Assembly Object:

Service Code	Implemented for:		Service Name
	Class	Instance	
0x0E	Yes	Yes	Get_Attribute_Single
0x10	No	Yes	Set_Attribute_Single

I/O Assemblies

The following table summarizes the Assembly instances that are supported in the ArmrorStart EtherNet/IP product:

Instance	Type	Description
3	Consumed	Required ODVA Consumed Instance
52	Produced	Required ODVA Produced Instance
100	Config	Configuration Assembly for Bulletin 290D/291D Starters

Instance	Type	Description
101	Config	Configuration Assembly for Bulletin 294D Starters
150	Consumed	Default Consumed Instance for Bulletin 290D/291D units
154	Consumed	Default Consumed Instance for Inverter type units
155	Produced	Default Produced Instance for Inverter units
156	Produced	Exhaustive Produced Instance for Inverter type units
190	Produced	1999-ZCIO Native Format Produced Assembly

Instance 3

Instance 3 is the required output (consumed) assembly.

Instance 3 "ODVA Cmd"								
Byte	**Bit 7**	**Bit 6**	**Bit 5**	**Bit 4**	**Bit 3**	**Bit 2**	**Bit 1**	**Bit 0**
0	—	—	—	—	—	—	—	Run Forward

Instance 52

Instance 52 is the required input (produced) assembly.

Instance 52 "ODVA Status"								
Byte	**Bit 7**	**Bit 6**	**Bit 5**	**Bit 4**	**Bit 3**	**Bit 2**	**Bit 1**	**Bit 0**
—	—	—	—	—	—	RunningForward	—	TripPresent

Instance 100

Instance 100 is the Configuration Assembly for Bulletin 290D and 291D units.

Instance 100 for 290D/291D Starters			
Member Index	**Byte Offset**	**Name**	**Parameter Instance**
0	0	Reserved for Logix	N/A
1	2	AssemblyRevision	N/A
2	4	FLASetting	28
3	6	OLResetLevel	29
4	8	OverloadClass	30
5	10	ProtFltResetMode	41
6	12	ProtectFltEnable	42
7	14	WarningEnable	43
8	16	RunNetFltAction	45
9	18	RunNetFltValue	46
10	20	RunNetIdleAction	47
11	22	RunNetIdleValue	48
12	24	IOPointConfigure	49
13	26	FilterOffOn	50

Instance 100 for 290D/291D Starters			
Member Index	**Byte Offset**	**Name**	**Parameter Instance**
14	28	FilterOnOff	51
15	30	OutProtFltState	52
16	32	OutProtFltValue	53
17	34	OutNetFltState	54
18	36	OutNetFltValue	55
19	38	OutNetIdleState	56
20	40	OutNetIdleValue	57
21	42	Input00Function	58
22	44	Input01Function	59
23	46	Input02Function	60
24	48	Input03Function	61
25	50	Input04Function	62
26	52	Input05Function	63
27	54	NetworkOverride	64
28	56	CommOverride	65
29	58	KeypadMode	66
30	60	KeypadDisable	67
31	62	OLWarningLevel	69
32	64	JamInhibitTime	70
33	66	JamTripDeley	71
34	68	JamTripLevel	72
35	70	JamWarningLevel	73
36	72	StallEnableTime	74
37	74	StallTripLevel	75
38	76	ULInhibitTime	76
39	78	ULTripDelay	77
40	80	ULTripLevel	78
41	82	ULWarnLevel	79
42	84	OptionMatch	92
43	88	AutoBaudEnable	100
44	90	ConsumedAssy	101
45	92	ProducedAssy	102
46	94	AutoRunZip	103
47	96	ZoneProducedEPR	104
48	98	ZoneProducedPIT	105
49	100	Zone1MacID	106
50	102	Zone2MacID	107
51	104	Zone3MacID	108
52	106	Zone4MacID	109

Instance 100 for 290D/291D Starters			
Member Index	**Byte Offset**	**Name**	**Parameter Instance**
53	108	Zone1Mask	114
54	112	Zone2Mask	115
55	116	Zone3Mask	116
56	120	Zone4Mask	117
57	124	Zone1Offset	118
58	126	Zone2Offset	119
59	128	Zone3Offset	120
60	130	Zone4Offset	121
61	132	Zone1AnalogMask	122
62	134	Zone2AnalogMask	123
63	136	Zone3AnalogMask	124
64	138	Zone4AnalogMask	125
65	140	Zone1AnOffset	126
66	142	Zone2AnOffset	127
67	144	Zone3AnOffset	128
68	146	Zone4AnOffset	129
69	148	Zone1EPR	130
70	150	Zone2EPR	131
71	152	Zone3EPR	132
72	154	Zone4EPR	133
73	156	Zone1Control	134
74	158	Zone2Control	135
75	160	Zone3Control	136
76	162	Zone4Control	137
77	164	Zone1Key	138
78	166	Zone2Key	139
79	168	Zone3Key	140
80	170	Zone4Key	141
81	172	DeviceValueKey	142
82	174	ZoneCtrlEnable	143

Instance 101

Instance 101 is the Configuration Assembly for Bulletin 294D units.

Instance 101 for 294D Starters			
Member Index	**Byte Offset**	**Name**	**Parameter Instance**
0	0	AssemblyRevision	N/A
1	2	AssemblyRevision	N/A
2	4	MotorNPVolts	28

Instance 101 for 294D Starters			
Member Index	**Byte Offset**	**Name**	**Parameter Instance**
3	6	MotorNPHertz	29
4	8	MotorOLCurrent	30
5	10	CurrentLimit	31
6	12	StopMode	32
7	14	SpeedReference	33
8	16	MinimumFreq	34
9	18	MaximumFreq	35
10	20	AccelTime1	36
11	22	DecelTime1	37
12	24	SCurvePercent	38
13	26	JogFrequency	39
14	28	JogAccelDecel	40
15	30	ProtFltResetMode	41
16	32	ProtectFltEnable	42
17	34	WarningEnable	43
18	36	RunNetFltAction	45
19	38	RunNetFaultValue	46
20	40	RunNetIdleAction	47
21	42	RunNetIdleValue	48
22	44	IOPointConfigure	49
23	46	FilterOffOn	50
24	48	FilterOnOff	51
25	50	OutProtFltState	52
26	52	OutProtFltValue	53
27	54	OutNetFaultState	54
28	56	OutNetFaultValue	55
29	58	OutNetIdleState	56
30	60	OutNetIdleValue	57
31	62	Input00Function	58
32	64	Input01Function	59
33	66	Input02Function	60
34	68	Input03Function	61
35	70	Input04Function	62
36	72	Input05Function	63
37	74	NetworkOverride	64
38	76	CommOverride	65
39	78	KeypadMode	66
40	80	KeypadDisable	67
41	82	AccelTime2	69

Instance 101 for 294D Starters			
Member Index	**Byte Offset**	**Name**	**Parameter Instance**
42	84	DecelTime2	70
43	86	MotorOLRetention	71
44	88	InternalFreq	72
45	90	SkipFrequency	73
46	92	SkipFreqBand	74
47	94	DCBrakeTime	75
48	96	DCBrakeLevel	76
49	98	ReverseDisable	77
50	100	FlytingStartEna	78
51	102	Compensation	79
52	104	SlipHertzAtFLA	80
53	106	BusRegulateMode	81
54	108	MotorOLSelect	82
55	110	SWCurrentTrip	83
56	112	AutoRestartTries	84
57	114	AutoRestartDelay	85
58	116	BoostSelect	86
59	118	MaximumVoltage	87
60	120	MotorNamPlateFLA	88
61	122	BrakeMode	89
62	124	BrkFreqThresh	90
63	126	BrkCurrThresh	91
64	128	OptionMatch	92
65	132	AutoBaudEnable	100
66	134	ConsumedAssy	101
67	136	ProducedAssy	102
68	138	AutoRunZip	103
69	140	AutoRunZip	104
70	142	ZoneProducedEPR	105
71	144	ZoneProducedPIT	106
72	146	Zone1MacID	107
73	148	Zone2MacID	108
74	150	Zone3MacID	109
75	152	Zone4MacID	114
76	156	Zone1Mask	115
77	160	Zone2Mask	116
78	164	Zone3Mask	117
79	168	Zone4Mask	118
80	170	Zone1Offset	119

Instance 101 for 294D Starters			
Member Index	**Byte Offset**	**Name**	**Parameter Instance**
81	172	Zone2Offset	120
82	174	Zone3Offset	121
83	176	Zone4Offset	122
84	178	Zone1AnalogMask	123
85	180	Zone2AnalogMask	124
86	182	Zone3AnalogMask	125
87	184	Zone4AnalogMask	126
88	186	Zone1AnOffset	127
89	188	Zone2AnOffset	128
90	190	Zone3AnOffset	129
91	192	Zone4AnOffset	130
92	194	Zone1EPR	131
93	198	Zone2EPR	132
94	200	Zone3EPR	133
95	202	Zone4EPR	134
96	204	Zone1Control	135
97	206	Zone2Control	136
98	208	Zone3Control	137
99	210	Zone4Control	138
100	212	Zone1Key	139
101	214	Zone2Key	140
102	216	Zone3Key	141
103	218	Zone4Key	142
104	220	DeviceValueKey	143

Instance 150

Instance 150 is the default Output (Consumed) Assembly for Bulletin 290D/291D starters.

Instance 150 "Starter Cmd" – DeviceLogix Consumed Assembly for Bulletin 290D/291D Starters								
Byte	**Bit 7**	**Bit 6**	**Bit 5**	**Bit 4**	**Bit 3**	**Bit 2**	**Bit 1**	**Bit 0**
0	—	—	—	—	—	ResetFault	RunReverse	RunForward
1	—	—	Out05	Out04	Out03	Out02	Out01	Out00
2	Pt07DeviceIn	Pt06DeviceIn	Pt05DeviceIn	Pt04DeviceIn	Pt03DeviceIn	Pt02DeviceIn	Pt01DeviceIn	Pt00DeviceIn
3	Pt15DeviceIn	Pt14DeviceIn	Pt13DeviceIn	Pt12DeviceIn	Pt11DeviceIn	Pt10DeviceIn	Pt09DeviceIn	Pt08DeviceIn
4	AnalogDeviceIn (low byte)							
5	AnalogDeviceIn (high Byte)							

Instance 151

Instance 151 is the compact input (Produced) Assembly for Bulletin 290D/291D starters.

Instance 151 "Compact Status" – Compact Produced Assembly for Bulletin 290D/291D Starters								
Byte	**Bit 7**	**Bit 6**	**Bit 5**	**Bit 4**	**Bit 3**	**Bit 2**	**Bit 1**	**Bit 0**
0	CurrentFlowing		NetControlStatus	Ready	RunningReverse	RunningForward	WarningPresent	TripPresent
1		DisconnectClosed			KeyPadHand	KeyPadOff	KeyPadAuto	DLXEnabled
2			Pt05	Pt04	Pt03	Pt02	Pt01	Pt00
3								
4	Pt07DeviceOut	Pt06DeviceOut	Pt05DeviceOut	Pt04DeviceOut	Pt03DeviceOut	Pt02DeviceOut	Pt01DeviceOut	Pt00DeviceOut
5	Pt15DeviceOut	Pt14DeviceOut	Pt13DeviceOut	Pt12DeviceOut	Pt11DeviceOut	Pt10DeviceOut	Pt09DeviceOut	Pt08DeviceOut

Instance 152

Instance 152 is the Exhaustive Starter Status Assembly for Bulletin 290D/291D starters.

Instance 152 "Starter Stat" – DeviceLogix Produced Assembly for Bulletin 290D/291D Starters								
Byte	**Bit 7**	**Bit 6**	**Bit 5**	**Bit 4**	**Bit 3**	**Bit 2**	**Bit 1**	**Bit 0**
0	CurrentFlowing		NetControlStatus	Ready	RunningReverse	RunningForward	WarningPresent	TripPresent
1		DisconnectClosed			KeyPadHand	KeyPadOff	KeyPadAuto	DLXEnabled
2			Pt05	Pt04	Pt03	Pt02	Pt01	Pt00
3								
4	Pt07DeviceOut	Pt06DeviceOut	Pt05DeviceOut	Pt04DeviceOut	Pt03DeviceOut	Pt02DeviceOut	Pt01DeviceOut	Pt00DeviceOut
5	Pt15DeviceOut	Pt14DeviceOut	Pt13DeviceOut	Pt12DeviceOut	Pt11DeviceOut	Pt10DeviceOut	Pt09DeviceOut	Pt08DeviceOut
6	An00DeviceOut (low byte)							
7	An00DeviceOut (high byte)							
8	Parameter 1 – PhaseL1Current							
9								
10	Parameter 2 – PhaseL2Current							
11								
12	Parameter 3 – PhaseL3Current							
13								
14	Parameter 4 – AverageCurrent							
15								
16	Parameter 5 – %ThermalUtilized							
17								
18	Parameter 11 – SwitchedVolts OutputSourceV (IPS units)							
19								
20	Parameter 12 – UnswitchedVolts SensorSourceV (IPS units)							
21								

Instance 152 "Starter Stat" – DeviceLogix Produced Assembly for Bulletin 290D/291D Starters	
22	Parameter 16 – TripStatus
23	
24	Parameter 17 – WarningStstus
25	

Instance 154

Instance 154 is the default Output (Consumed) Assembly for Inverter type (Bulletin 294D) Distributed Starters.

Instance 154 "Drive Cmd" – DeviceLogix Consumed Assembly for Bulletin 294D Starters								
Byte	**Bit 7**	**Bit 6**	**Bit 5**	**Bit 4**	**Bit 3**	**Bit 2**	**Bit 1**	**Bit 0**
0				JogReverse	JogForward	ResetFault	RunReverse	RunFoward
1	Decel2	Accel2	Out05	Out04	Out03	Out02	Out01	Out00
2	CommandFreq (Low) (xxx.x Hz)							
3	CommandFreq (High) (xxx.x Hz)							
4	Pt07DeviceIn	Pt06DeviceIn	Pt05DeviceIn	Pt04DeviceIn	Pt03DeviceIn	Pt02DeviceIn	Pt01DeviceIn	Pt00DeviceIn
5	Pt15DeviceIn	Pt14DeviceIn	Pt13DeviceIn	Pt12DeviceIn	Pt11DeviceIn	Pt10DeviceIn	Pt09DeviceIn	Pt08DeviceIn
6	An00DeviceIn (lowbyte)							
7	An00DeviceIn (highbyte)							

Instance 156

Instance 156 is the Exhaustive Drive Status Assembly Instance

Instance 156 "Drive Status" – Produced Assembly for Bulletin 294E Starters								
Byte	**Bit 7**	**Bit 6**	**Bit 5**	**Bit 4**	**Bit 3**	**Bit 2**	**Bit 1**	**Bit 0**
0	AtReference	NetRefStatus	NetControlStatus	Ready	RunningReverse	RunningForward	WarningPresent	TripPresent
1	BrakeStatus	DisconnectClosed		KeyPadJogging	KeyPadHand	KeyPadOff	KeyPadAuto	DLXEnabled
2	Output Frequency (Low) (xxx.x Hz)							
3	Output Frequency (High) (xxx.x Hz)							
4			Pt05	Pt04	Pt03	Pt02	Pt01	Pt00
5								
6	Pt07DeviceOut	Pt06DeviceOut	Pt05DeviceOut	Pt04DeviceOut	Pt03DeviceOut	Pt02DeviceOut	Pt01DeviceOut	Pt00DeviceOut
7	Pt15DeviceOut	Pt14DeviceOut	Pt13DeviceOut	Pt12DeviceOut	Pt11DeviceOut	Pt10DeviceOut	Pt09DeviceOut	Pt08DeviceOut
8	An00DeviceOut (low byte)							
9	An00DeviceOut (high byte)							
10	Parameter 3 – OutputCurrent							
11								
12	Parameter 4 – OutputVoltage							
13								

Instance 156 "Drive Status" – Produced Assembly for Bulletin 294E Starters	
14	Parameter 5 – DCBusVoltage
15	
16	Parameter 11 – SwitchedVolts OutputSourceV (IPS units)
17	
18	Parameter 12 – UnswitchedVolts SensorSourceV (IPS units)
19	
20	Parameter 13 – InternalFanRPM
21	
22	Parameter 14 – ElaspedRunTime
23	
24	Parameter 15 – DriveTemperature
25	
26	Parameter 16 – TripStatus
27	
28	Parameter 17 – WarningStatus
29	
30	Parameter 142 – DeviceValueKey
31	

Instance 190

Instance 190 is the 1999-ZCIO Native Format Produced Assembly.

Instance 190 "Native 1" – DeviceLogix Consumed Assembly for Bulletin 294D Starters								
Byte	**Bit 7**	**Bit 6**	**Bit 5**	**Bit 4**	**Bit 3**	**Bit 2**	**Bit 1**	**Bit 0**
0			Pt04	Pt04	Pt03	Pt02	Pt01	Pt00
1				Ready	RunningReverse	RunningFoward	WarningPresent	TripPresent
2	Out05	Out04	Out03	Out02	Out01	Out00	RunReverse	RunFoward
3							JogReverse	JogForward
4	Pt07DeviceOut	Pt06DeviceOut	Pt05DeviceOut	Pt04DeviceOut	Pt03DeviceOut	Pt02DeviceOut	Pt01DeviceOut	Pt00DeviceOut
5	ZICCV (Low)							
6	ZICCV (High)							

Connection Object

CLASS CODE 0x0005

The following class attributes will be supported for the Connection Object.

Attribute ID	Access Rule	Name	Data Type	Value
1	Get	Revision	UINT	2

Multiple instances of the Connection Object will be supported, instances 1, 2, and 4 from the group 2 predefined master/slave connection set, instances 5-7 will be available explicit UCMM connections, and instances 8-11 will act as ZIP consumers.

Instance 1

Instance 1 is the Predefined Group 2 Connection Set Explicit Message Connection. The following instance 1 attributes will be supported:

Attribute ID	Access Rule	Name	Data Type	Value
1	Get	State	USINT	0=nonexistant 1=configuring 3=established 4=timed out
2	Get	Instance Type	USINT	0=Explicit Message
3	Get	Transport Class Trigger	USINT	0x83 - Server, Transport Class 3
4	Get	Produced Connection ID	UINT	10xxxxxx011 xxxxxx=node address
5	Get	Consumed Connection ID	UINT	10xxxxxx100 xxxxxx=node address
7	Get	Produced Connection Size	UINT	0x61
8	Get	Consumed Connection Size	UINT	0x61
9	Get/Set	Expected Packet Rate	UINT	in milliseconds
12	Get	Watchdog Action	USINT	01 = auto delete 03 = deferred delete

Instance 2

Instance 2 is the Predefined Group 2 Connection Set Polled I/O Message Connection. The following instance 2 attributes will be supported:

Attribute ID	Access Rule	Name	Data Type	Value
1	Get	State	USINT	0=nonexistant 1=configuring 3=established 4=timed out
2	Get	Instance Type	USINT	1=I/O Connection
7	Get	Produced Connection Size	UINT	0 to 8
8	Get	Consumed Connection Size	UINT	0 to 8

Instance 4

Instance 4 is the Predefined Group 2 Connection Set of State/Cyclic I/O Message Connection. The following instance 4 attributes will be supported:

Attribute ID	Access Rule	Name	Data Type	Value
1	Get	State	USINT	0=nonexistant 1=configuring 3=established 4=timed out
2	Get	Instance Type	USINT	1=I/O Connection
3	Get	Transport Class Trigger	USINT	0x00 (Cyclic, unacknowledged) 0x03 (Cyclic, acknowledged) 0x10 (COS, unacknowledged) 0x13 (COS, acknowledged)
6	Get	Initial Comm Characteristics	USINT	0x02 (acknowledged) 0x0F (unacknowledged)
7	Get	Produced Connection Size	UINT	0 to 8
8	Get	Consumed Connection Size	UINT	0 to 8
9	Get/Set	Expected Packet Rate	UINT	in milliseconds

Instance 5-7

Instance 5 - 7 will be available group 3 explicit message connections that are allocated through the UCMM. The following attributes will be supported:

Attribute ID	Access Rule	Name	Data Type	Value
1	Get	State	USINT	0=nonexistant 1=configuring 3=established 4=timed out
2	Get	Instance Type	USINT	1=Explicit Message
3	Get	Transport Class Trigger	USINT	0x83 - Server, Transport Class 3
7	Get	Produced Connection Size	UINT	0
8	Get	Consumed Connection Size	UINT	

Instance 8-11

Instances 8-11 are ZIP Consumers. The following instance attributes will be supported:

Attribute ID	Access Rule	Name	Data Type	Value
1	Get	State	USINT	0=nonexistant 1=configuring 3=established
2	Get	Instance Type	USINT	1=I/O Connection
7	Get	Produced Connection Size	UINT	0
8	Get	Consumed Connection Size	UINT	8

The following services will be implemented for the Connection Object:

Service Code	Implemented for:		Service Name
	Class	Instance	
0x05	No	Yes	Reset
0x0E	No	Yes	Get_Attribute_Single
0x10	No	Yes	Set_Attribute_Single

Discrete Input Point Object

CLASS CODE 0x0008

The following class attributes are currently supported for the Discrete Input Point Object:

Attribute ID	Access Rule	Name	Data Type	Value
1	Get	Revision	UINT	2
2	Get	Max Instance	UINT	6

Six instances of the Discrete Input Point Object are supported. All instances contain the following attributes:

Attribute ID	Access Rule	Name	Data Type	Value
3	Get	Value	BOOL	0 = OFF, 1 = ON
4	Get	Fault Status	BOOL	0 = OK, 1 = Fault
115	Get/Set	Force Enable	BOOL	0 = Disable, 1 = Enable
116	Get/Set	Force Value	BOOL	0 = OFF, 1 = ON

The following common services will be implemented for the Discrete Input Point Object:

Service Code	Implemented for:		Service Name
	Class	Instance	
0x0E	Yes	Yes	Get_Attribute_Single
0x10	No	Yes	Set_Attribute_Single

Discrete Output Point Object

CLASS CODE 0x0009

The following class attributes will be supported for the Discreet Output Point Object:

Attribute ID	Access Rule	Name	Data Type	Value
1	Get	Revision	UINT	1
2	Get	Max Instance	UINT	8 for 290D/291D, 10 for 294D

Eight instances of the Discrete Output Point Object will be supported for DOL/Reverser (Bulletin 290D/291D) units. Ten instances will be supported for Drive (Bulletin 294E) units. The following table summarizes the DOP instances:

Instance	Name	Alternate Mapping	Description
1	Run Fwd Output	0029-01-03	Run Forward output.
2	Run Rev Output	0029-01-04	Run Reverse output.
3	User Output A	None	These are the six possible user outputs for all starter types. Their fault/idle behavior is defined in DOP Instance 3.
4	User Output B	None	
5	User Output C	None	
6	User Output D	None	
7	User Output E	None	
8	User Output F	None	
9	Drive Jog Fwd	None	This instances exists for Inverter (Bulletin 294D) units only.
10	Drive Jog Rev	None	

All instances contain the following attributes:

Attribute ID	Access Rule	Name	Data Type	Value	
3	Get	Value	BOOL	0 = OFF, 1 = ON	
5		Comm Fault Action	BOOL	0=Comm Fault Value, 1=Hole Last State	
6		Comm Fault Value	BOOL	0 = OFF, 1 = ON	
7		Comm Fault Action	BOOL	0=Comm Fault Value, 1=Hole Last State	
8		Comm Fault Value	BOOL	0 = OFF, 1 = ON	
113		Prot Fault Action	BOOL	0=Flt Value, 1=Ignore	These attributes are not settable in instances 1,2,9 or 10
114		Prot Fault Value	BOOL	0 = OFF, 1 = ON	
115	Get/Set	Force Enable	BOOL	0=Disable, 1=Enable	
116	Get/Set	Force Value	BOOL	0 = OFF, 1 = ON	
117	Get/Set	Input Binding	STRUCT: USINT Array of USINT	Size of appendix I encoded path Appendix I encoded path NULL path means attribute 3 drives the output. Otherwise, this is a path to a bit in the Bit Table.	

The following common services will be implemented for the Discrete Output Point Object:

Service Code	Implemented for:		Service Name
	Class	Instance	
0x0E	Yes	Yes	Get_Attribute_Single
0x10	No	Yes	Set_Attribute_Single

Discrete Output Point Object Special Requirements

There are many sources that can affect an output point's value: an I/O message, an explicit message, local logic, network fault and idle conditions, and protection fault conditions. An output point must know how to select which source of data to use to drive its value attribute.

An output that is not bound behaves much the same as in the DeviceNet Specification. Two notable additions to unbound DOP behavior for the Intimidator implementation are:

- Explicit control of the value attribute via Explicit messages is constrained by the Touch Algorithm
- Protection Fault Action and Protection Fault Value

The following state transition diagram is used for an unbound Bulletin 290D

Figure 45 - State Transition for Unbound Bulletin 290D

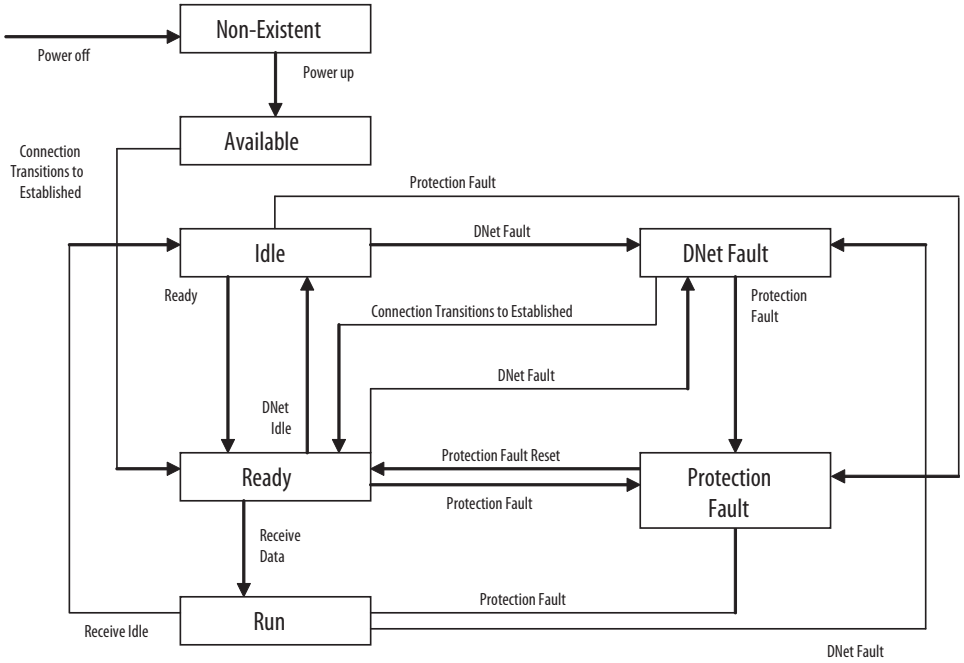

The following flow chart illustrates the behavior of **Bound DOPs**

Figure 46 - State Transition for Bound Bulletin 290D

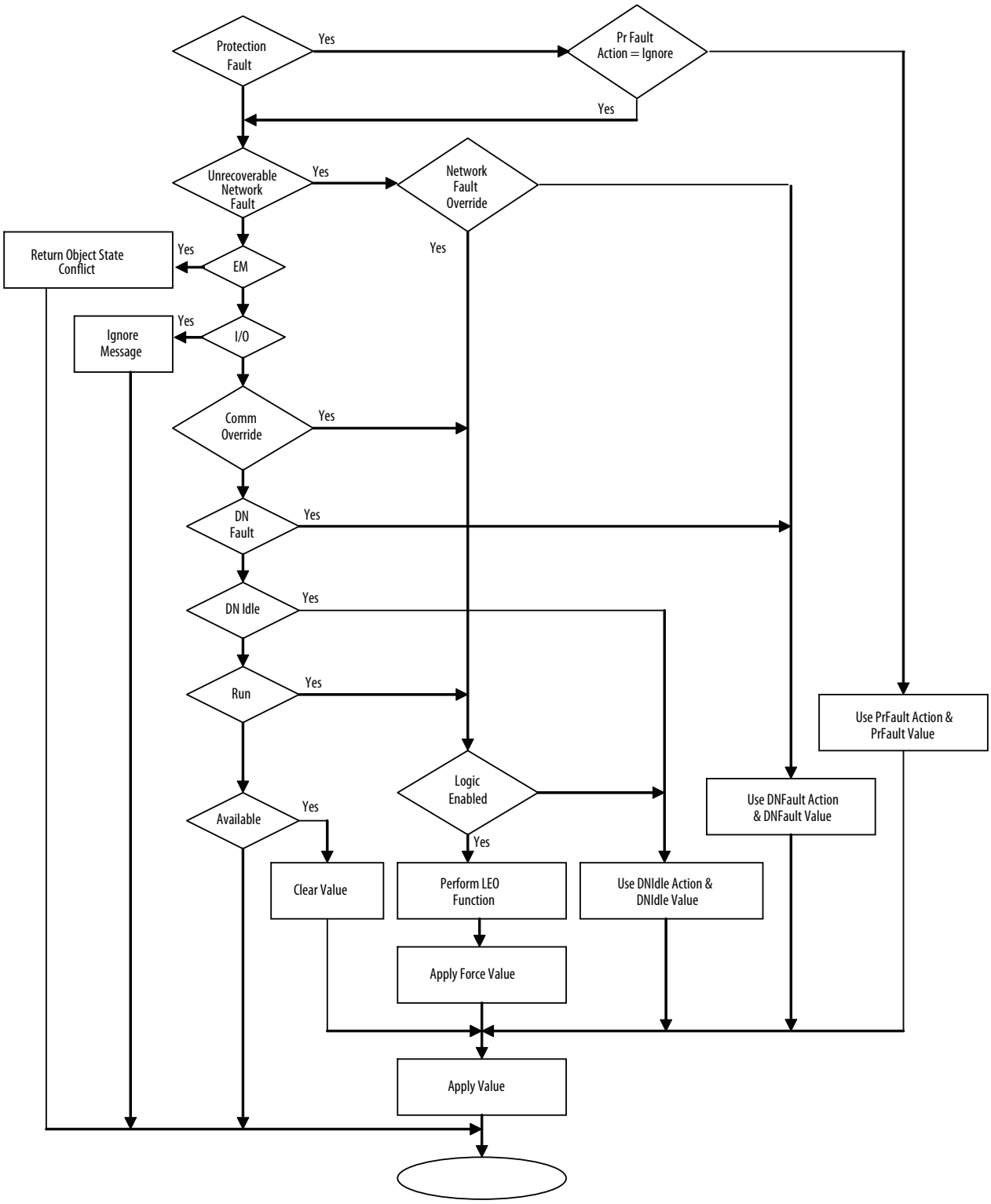

The following flow chart illustrates the behavior of **Bound DOP Instances**.

Figure 47 - State Transition for Bound Bulletin 290D

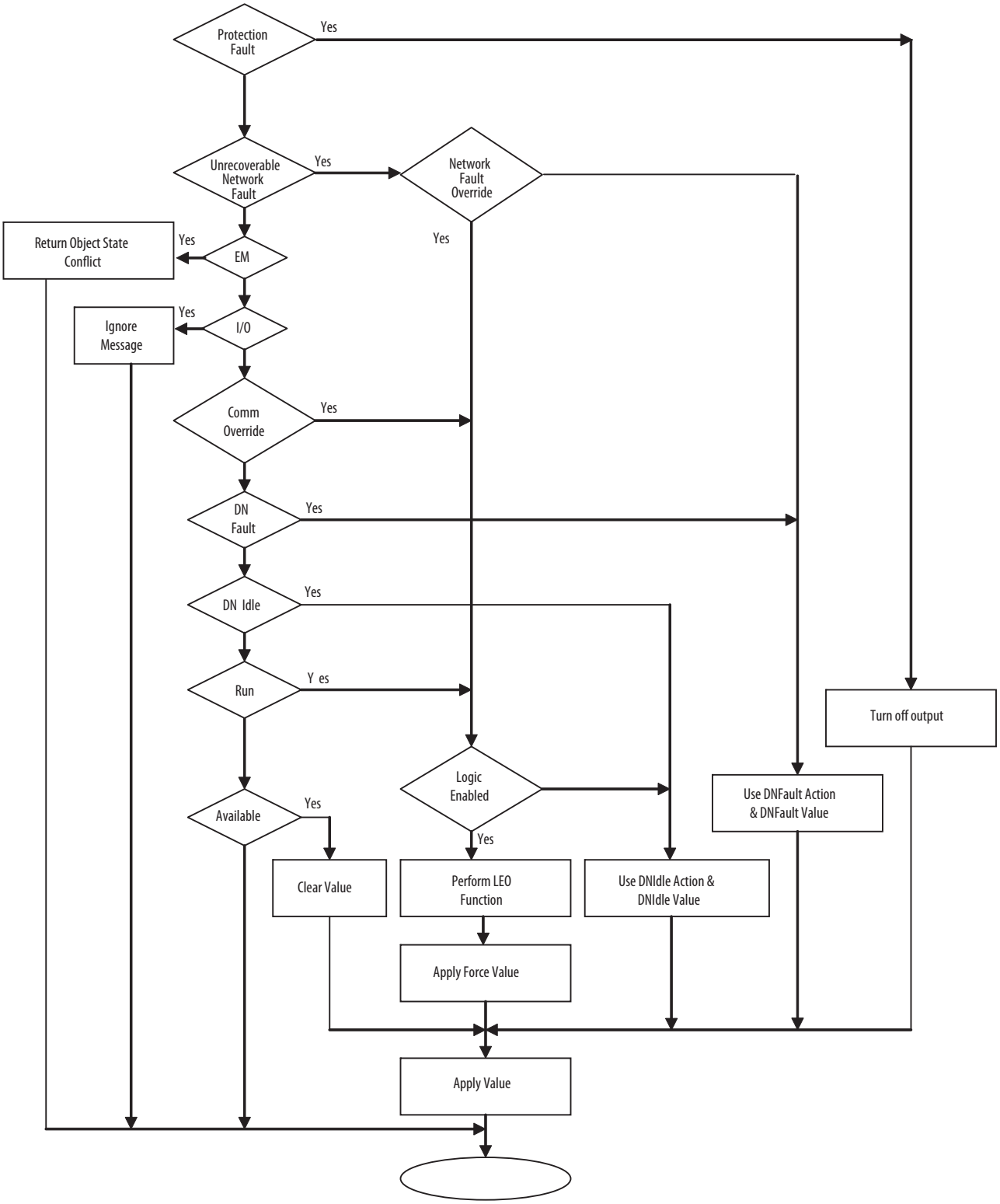

Analog Input Point Object

CLASS CODE 0x000A (Implemented in Bulletin 294D units only)

The following class attributes will be supported for the Analog Input Point Object:

Attribute ID	Access Rule	Name	Data Type	Value
1	Get	Revision	UINT	2
2	Get	Max Instance	UINT	1

Two instances of the Analog Input Point Object will be supported. CommandFreq from Assembly 154 is placed in the value attribute when it is consumed.

Attribute ID	Access Rule	Name	Data Type	Value
3	Get	Value	INT	Default = 0
8	Get	Value Data Type	USINT	0 = INT

The following common services will be implemented for the Analog Input Point Object:

Service Code	Implemented for:		Service Name
	Class	Instance	
0x0E	Yes	Yes	Get_Attribute_Single
0x10	No	Yes	Set_Attribute_Single

Analog Output Point Object

CLASS CODE 0x000B (Implemented in Bulletin 294D units only)

The following class attributes will be supported for the Analog Output Point Object:

Attribute ID	Access Rule	Name	Data Type	Value
1	Get	Revision	UINT	2
2	Get	Max Instance	UINT	1

One instance of the Analog Output Point object will supported. It will represent the Frequency command. CommandFreq from Assembly 154 is placed in the Value Attribute when it is consumed. The Value Attribute can then be overwritten by DeviceLogix.

Attribute ID	Access Rule	Name	Data Type	Value
3	Get/Set	Value	INT	0 = Default
8	Get	Value Data Type	USINT	0 = INT
129	Get/Set	Input Binding	STRUCT: USINT Array of USINT	Size of Appendix I encoded path Appendix I encoded path NULL path means attribute 3 drives the output. Otherwise, this is a path to a bit in the Bit Table.

The following common services will be implemented for the Analog Output Point Object:

Service Code	Implemented for:		Service Name
	Class	Instance	
0x0E	Yes	Yes	Get_Attribute_Single
0x10	No	Yes	Set_Attribute_Single

Parameter Object

CLASS CODE 0x000F

The following class attributes will be supported for the Parameter Object:

Attribute ID	Access Rule	Name	Data Type	Value
1	Get	Revision	UINT	—
2	Get	Max Instance	UINT	—
8	Get	Parameter Class Descriptor	WORD	—
9	Get	Configuration Assembly Instance	UINT	100 for 290D/291D units 101 for 294D units

The number of instances of the parameter object will depend upon the type of Distributed Starter that the control board is connected to.

The following instance attributes will be implemented for all parameter attributes:

Attribute ID	Access Rule	Name	Data Type	Value
1	Get/Set	Value	Specified in Descriptor	—
2	Get	Link Path Size	USINT	—
3	Get	Link Path	Array of: BYTE EPATH	—
4	Get	Descriptor	WORD	—
5	Get	Data Type	EPATH	—
6	Get	Data Size	USINT	—
7	Get	Parameter Name String	SHORT_STRING	—
8	Get	Units String	SHORT_STRING	—
9	Get	Help String	SHORT_STRING	—
10	Get	Minimum Value	Specified in Descriptor	—
11	Get	Maximum Value	Specified in Descriptor	—
12	Get	Default Value	Specified in Descriptor	—
13	Get	Scaling Multiplier	UINT	—
14	Get	Scaling Divisor	UINT	—
15	Get	Scaling Base	UINT	—
16	Get	Scaling Offset	INT	—

Attribute ID	Access Rule	Name	Data Type	Value
17	Get	Multiplier Link	UINT	—
18	Get	Divisor Link	UINT	—
19	Get	Base Link	UINT	—
20	Get	Offset Link	UINT	—
21	Get	Decimal Precision	USINT	—

The following services will be implemented for the Parameter Object:

Service Code	Implemented for:		Service Name
	Class	Instance	
0x01	No	Yes	Get_Attribute_All
0x0E	Yes	Yes	Get_Attribute_Single
0x10	No	Yes	Set_Attribute_Single
0x4b	No	Yes	Get_Enum_String

Parameter Group Object

CLASS CODE 0x0010

The following class attributes will be supported for the Parameter Group Object:

Attribute ID	Access Rule	Name	Data Type	Value
1	Get	Revision	UINT	—
2	Get	Max Instance	UINT	—

The following instance attributes will be supported for all Parameter Group Instances.

Attribute ID	Access Rule	Name	Data Type	Value
1	Get	Group Name String	SHORT_STRING	—
2	Get	Number of Members	UINT	—
3	Get	1st Parameter	UINT	—
4	Get	2nd Parameter	UINT	—
n	Get	Nth Parameter	UINT	—

The following common services will be implemented for the Parameter Group Object.

Service Code	Implemented for:		Service Name
	Class	Instance	
0x0E	Yes	Yes	Get_Attribute_Single

Discrete Input Group Object

CLASS CODE 0x001D

No class attributes will be supported for the Discrete Input Group (DIP) Object.

A single instance of the Discrete Input Group Object is supported and contains the following instance attributes:

Attribute ID	Access Rule	Name	Data Type	Value
3	Get	Number of Instances	USINT	6
4	Get	Binding	Array of UINT	List of DIP Instances
6	Get/Set	Off_On_Delay	UINT	—
7	Get/Set	On_Off_Delay	UINT	—

The following common services will be implemented for the Discrete Input Group Object:

Service Code	Implemented for:		Service Name
	Class	Instance	
0x0E	No	Yes	Get_Attribute_Single
0x10	No	Yes	Set_Attribute_Single

Discrete Output Group Object

CLASS CODE 0x001E

No class attributes will be supported for the Discrete Output Group (DOP) object.

Instance 1…3 exist for all ArmorStart LT units.

Instance 1 exists for the sole purpose of providing a place holder for the Comm Override and Network Override parameters. Instance 1 will contain the following attributes:

Attribute ID	Access Rule	Name	Data Type	Value
3	Get	Number of Instances	USINT	8 for DOL/Soft Starter (290D/291D) 12 for Inverters (294D)
4	Get	Binding	Array of UINT	List of DOP Instances
6	Get/Set	Command	BOOL	0 = Idle, 1 = Run
115	Get/Set	Network Status Overrride	BOOL	0 = No override (go to safe state) 1 = Override (run local logic)
116	Get/Set	Comm Status Overrride	BOOL	0 = No Override (go to safe state) 1 = Override (run local logic)

Instance 2 controls the communication fault and idle behaviors for run/jog outputs. Instance 2 contains the following instance attributes:

Attribute ID	Access Rule	Name	Data Type	Value
3	Get	Number of Instances	USINT	2 for DOLs (290D/291D) 4 for Drives (294D)
4	Get	Binding	Array of UINT	1, 2 for DOLs (290D/291D) 1, 2, 9, 10 for Drives (294D)
6	Get/Set	Command	BOOL	0 = Idle, 1 = Run
7	Get/Set	Fault Action	BOOL	0 = Fault Value Attribute, 1 = Hold Last State
8	Get/Set	Fault Value	BOOL	0 = OFF, 1 = On
9	Get/Set	Idle Action	BOOL	0 = Idle Value Attribute, 1 = Hold Last State
10	Get/Set	Idle Value	BOOL	0 = OFF, 1 = On

Note: There are no protection fault attributes. Behavior for protection faults is go to OFF.

Instance 3 will drive protection fault and communication fault/idle behaviors for user outputs. Instance 3 will have the following attributes.

Attribute ID	Access Rule	Name	Data Type	Value
3	Get	Number of Instances	USINT	6
4	Get	Binding	Array of UINT	3, 4, 5, 6, 7, 8
6	Get/Set	Command	BOOL	0 = Idle, 1 = Run
7	Get/Set	Fault Action	BOOL	0 = Fault Value Attribute, 1 = Hold Last State
8	Get/Set	Fault Value	BOOL	0 = OFF, 1 = On
9	Get/Set	Idle Action	BOOL	0 = Idle Value Attribute, 1 = Hold Last State
10	Get/Set	Idle Value	BOOL	0 = OFF, 1 = On
113	Get/Set	Pr Fault Action	BOOL	0 = Pr Fault Value Attribute, 1 = Ignore
114	Get/Set	Pr Fault Value	BOOL	0 = OFF, 1 = On

The following common services are implemented for the Discrete Input Group Object.

Service Code	Implemented for:		Service Name
	Class	Instance	
0x0E	No	Yes	Get_Attribute_Single
0x10	No	Yes	Set_Attribute_Single

Control Supervisor Object

CLASS CODE 0x0029

No class attributes are supported.

A single instance (Instance 1) of the Control Supervisor Object is supported and contains the following instance attributes.

Attribute ID	Access Rule	Name	Data Type	Value
3	Get/Set	Run 1	BOOL	These Run outputs also map to DOP Instances 1 and 2
4❶	Get/Set	Run 2	BOOL	
7	Get	Running 1	BOOL	—
8❶	Get	Running 2	BOOL	—
9	Get	Ready	BOOL	—
10	Get	Tripped	BOOL	—
12	Get/Set	Fault Reset	BOOL	0 > 1 = Trip Reset

❶ Reversing Starters (291D) and Inverter (294D) Starters only

The following common services will be implemented for the Control Supervisor Object.

Service Code	Implemented for:		Service Name
	Class	Instance	
0x0E	No	Yes	Get_Attribute_Single
0x10	No	Yes	Set_Attribute_Single

Overload Object

CLASS CODE 0x002C

No class attributes will be supported for the Overload Object.

A single instance (Instance 1) of the Overload Object is supported for DOL (290D/291D) and Reversing (294D) Starters. Instance 1 contains the following instance attributes.

Attribute ID	Access Rule	Name	Data Type	Value
3	Get/Set	FLA Setting	BOOL	xxx.x amps
4	Get/Set	Trip Class	USINT	—
5	Get	Average Current	INT	xxx.x amps
7	Get	% Thermal Utilized	USINT	xxx% FLA
8	Get	Current L1	INT	xxx.x Amps
9	Get	Current L2	INT	
10	Get	Current L3	INT	
190	Get/Set	FLA Setting Times 10	BOOL	xxx.xx Amps
192	Get	Average Current Times 10	UINT	
193	Get	Current L1 Times 10	UINT	
194	Get	Current L2 Times 10	UINT	
195	Get	Current L3 Times 10	UINT	

The following common services are implemented for the Overload Object.

Service Code	Implemented for:		Service Name
	Class	Instance	
0x01	No	Yes	Get_Attribute_All
0x0E	No	Yes	Get_Attribute_Single
0x10	No	Yes	Set_Attribute_Single

DPI Fault Object

CLASS CODE 0x0097

This object provides access to fault information within the device.

The following class attributes will be supported for the DPI Fault Object.

Attribute ID	Access Rule	Name	Data Type	Value
1	Get	Class Revision	UINT	1
2	Get	Number of Instances	UINT	4
3	Get/Set	Fault Cmd Write	USINT	0=NOP; 1=Clear Fault; 2=Clear Flt Queue
4	Get	Fault Instance Read	UINT	The instance of the Fault Queue Entry containing information about the fault that tripped the device.
5	Get	Fault into parameter instance array	Struct of: UINT Array [5] of UINT	Array of SnapShot parameter instance numbers Array Size = 5 Array of Instance Numbers = 23, 24, 25, 26, 27
6	Get	Number of Recorded Faults	UINT	The number of faults recorded in the fault queue.

Four instances of the DPI Fault Object will be supported.

Attribute ID	Access Rule	Name	Data Type	Value
0	Get	Full/All Info Fault Code Fault Source DPI Port Number Device Object Instance Fault Text Fault Time Stamp Timer Value Timer Descriptor Help Object Instance Fault Data	Struct of: UINT Struct of: USINT USINT BYTE [16] Struct of: ULDINT WORD USINT Array [5] of 32 bit fault data values	 See Tables below 0 0x2c See Tables below Snapshot data
1	Get	Basic Info Fault Code Fault Source DPI Port Number Device Object Instance Fault Time Stamp Timer Value Timer Descriptor	Struct of: UINT Struct of: USINT USINT Struct of: ULINT WORD	 See Tables below 0 0x2c
3	Get	Help Text	STRING	See Tables below

The following common services will be implemented for the DPI Fault Object.

Service Code	Implemented for:		Service Name
	Class	Instance	
0x0E	Yes	Yes	Get_Attribute_Single
0x10	Yes	No	Set_Attribute_Single

The table below lists Fault Codes, Fault Text, and Fault Help Strings for DOL and Reversers.

Table 30 - Fault Codes, Fault Text, and Fault Help Strings for DOL and Reversers

Fault Code	Fault Text	Help Text
1	Fault 1	—
2	User Defined	User defined trip has occurred.
3	Overload Trip	Load has drawn excessive current based on trip class selected.
4	Fault 4	—
5	Phase Loss Trip	Indicates missing supply phase. This fault can be disabled.
6	Jam Trip	Motor current above jam level for more than jam trip delay time.
7	Underload Trip	Motor current below UL level for more than UL trip delay time.
8	Fault 8	—
9	Fault 9	—
10	Fault 10	—
11	Fault 11	—
12	Stall Trip	Motor current above stall trip level during motor starting.
13	Switched Power	Indicates the loss of switched control power. *Not available in units with Integrated Power Supply.*
14	Under Power Trip	Indicates the internal power supply is below its working level. *Available in units with Integrated Power Supply only*
15	Sensor Short	Flags a miswired hardware input point.
16	Output Short	Flags a miswired hardware output point.
17	Fault 17	—
18	Fault 18	—
19	Phase Imbalance	Indicates an imbalanced phase current.
20	Fault 20	—
21	Aux Power Loss	Auxiliary Power was lost or dipped below the minimum threshold. *Not available in units with Integrated Power Supply*
22	Fault 22	—
23	Fault 23	—
24	Fault 24	—
25	Fault 25	—
26	Fault 26	—
27	NonVol Memory	This is a major fault which renders the unit inoperable.
28	Fault 28	—
29	Fault 29	—

Table 30 - Fault Codes, Fault Text, and Fault Help Strings for DOL and Reversers

Fault Code	Fault Text	Help Text
30	Hardware Fault	This is a major fault which renders the unit inoperable.
31	Fault 31	—
32	Fault 32	—
33	Fault 33	—
34	Fault 34	—
35	Fault 35	—
36	Fault 36	—
37	Fault 37	—
38	Fault 38	—
39	Fault 39	—
40	Unknown Fault	—
41	BrakeOption	Brake Option hardware does not match parameter 92 setting.
42	KeypadOption	Keypad Option hardware does not match parameter 92 setting.
…		
75	Fault 75	—

The table below lists Fault Codes, Fault Text, and Fault Help Strings for Drive units.

Table 31 - Fault Codes, Fault Text, and Fault Help Strings for Drive Units

Fault Code	Fault Text	Help Text	PF4M Fault Code
1	Fault 1	—	
2	User Defined	User defined trip has occurred.	
3	Motor Overload	The load has drawn excessive current.	7
4	Drive Overload	150% load for 1 min. or 200% load for 3 sec. exceeded.	64
5	Phase U to Gnd	A Phase U to Ground fault detected between drive and motor.	38
6	Phase V to Gnd	A Phase V to Ground fault detected between drive and motor.	39
7	Phase W to Gnd	A Phase W to Ground fault detected between drive and motor.	40
8	Phase UV Short	Excessive current detected between phases U and V.	41
9	Phase UW Short	Excessive current detected between phases U and W.	42
10	Phase VW Short	Excessive current detected between phases V and W.	43
11	Ground Fault	A current path to earth ground at one or more output terminals.	13
12	Stall Trip	The drive is unable to accelerate the motor.	6
13	Switched Power	Indicates the loss of switched control power. *Not available in units with Integrated Power Supply*	
14	Under Power Trip	Indicates the internal power supply is below its working level. *Available in units with Integrated Power Supply only.*	
15	Sensor Short	Flags a miswired hardware input point.	
16	Output Short	Flags a miswired hardware output point.	

Table 31 - Fault Codes, Fault Text, and Fault Help Strings for Drive Units

Fault Code	Fault Text	Help Text	PF4M Fault Code
17	Fault 17		
18	Heatsink Temp	The Heatsink temperature exceeds a predefined value.	8
19	HW Over Current	The drive output current has exceeded the hardware limit.	12
20	SW OverCurrent	Programmed parameter 83 (SW Current Trip) has been exceeded.	63
21	Aux Power Loss	Auxiliary Power was lost or dipped below the minimum threshold. *Not available in units with Integrated Power Supply.*	
22	Internal Comm	Communication with the internal Power Flex drive has been lost.	71
23	Drive Comm Loss	The RS485 port on the internal Power Flex stopped communicating.	81
24	Power Loss	Drive DC Bus Voltage remained below 85% of nominal bus voltage.	3
25	Under Voltage	DC Bus Voltage fell below the minimum value.	4
26	Over Voltage	DC Bus Voltage exceeded the maximum value.	5
27	MCB EEPROM	This is a major fault which renders the ArmorStart inoperable.	
28	Param Sync	The drive and Main Control Board EEPROMS are not in sync.	
29	Drive EEPROM	The drive EEPROM checksum checks have failed.	100
30	Hardware Fault	This is a major fault which renders the unit inoperable	
31	Fan RMP	The internal cooling fan is not running properly.	
32	Power Unit	A major failure has been detected in the drive power section.	70
33	Drive I/O Brd	A failure has been detected in the drive control and I/O section.	122
34	Restart Retries	Automatic fault reset and run retries exceeded.	33
35	Drive Aux In Flt	The drive auxiliary input interlock is open inside the ArmorStart.	2
36	Fault 36	—	
37	Drv Param Reset	Internal Drive Parameters (Parameters > 100) have been defaulted.	48
38	Fault 38	—	
39	Fault 39	—	
40	Unknown Fault	—	
41	BrakeOption	Brake Option hardware does not match parameter 92 setting	41
42	KeypadOption	Keypad Option hardware does not match parameter 92 setting	42
43	Disconnect Open	Disconnect is open causing a DC Bus Under Voltage in the drive	
...			...
75	Fault 75	—	75

DPI Alarm Object

CLASS CODE 0x0098

This object provides access to warning information within the device.

The following class attributes will be supported.

Attribute ID	Access Rule	Name	Data Type	Value
1	Get	Class Revision	UINT	1
2	Get	Number of Instances	UINT	1
3	Set	Alarm Cmd Write	USINT	0=NOP; 1=Clear Alarm; 2=Clear Queue
4	Get	Alarm Instance Read	UINT	The instance of the Fault Queue Entry containing information about the fault that tripped the device.
6	Get	Number of Recorded Alarms	UINT	The number of faults recorded in the fault queue.

A single instance of the DPI Alarm Object will be supported.

Attribute ID	Access Rule	Name	Data Type	Value
0	Get	Full/All Info Alarm Code Alarm Source DPI Port Number Device Object Instance Alarm Text Alarm Time Stamp Timer Value Timer Descriptor Help Object Interface Alarm Data	Struct of: UINT Struct of: USINT USINT STRING Struct of: ULINT WORD USINT	 See Tables below 0 See Tables below
1	Get	Basic Info Alarm Code Alarm Source DPI Port Number Device Object Instance Alarm Time Stamp Timer Value Timer Descriptor	Struct of: UINT Struct of: USINT USINT Struct of: ULINT WORD	 See Tables below 0
3	Get	Help Text	STRING	See Tables below

The following common services will be implemented for the DPI Fault Object.

Service Code	Implemented for:		Service Name
	Class	Instance	
0x0E	Yes	Yes	Get_Attribute_Single
0x10	Yes	No	Set_Attribute_Single

The table below lists Fault Codes, Fault Text, and Fault Help Strings.

Table 32 - Fault Codes, Fault Text, and Fault Help Strings for ArmorStart LT

Warning Code	Warning Text	Help Text
1	Warning 1	—
2	Warning 2	—
3	Motor Overload	Overload warning level has been exceeded.

Table 32 - Fault Codes, Fault Text, and Fault Help Strings for ArmorStart LT

Warning Code	Warning Text	Help Text
4	Warning 4	—
5	Warning 5	Indicates missing supply phase. This fault can be disabled.
6	Jam Warning	Motor current has exceeded jam warning level.
7	Underload Warning	Motor current dropped below Underload Warning level.
8	Warning 8	—
9	Warning 9	—
10	Warning 10	—
11	Warning 11	—
12	Warning 12	—
13	Switched Pwr Warn	Indicates the control power has dipped below 19 Volts. *Not available in units with Integrated Power Supply.*
14	Under Power Warn	Indicates the internal power supply is below its optimal level. *Available in units with Integrated Power Supply only.*
15	Warning 15	—
16	Warning 16	—
17	Warning 17	—
18	Warning 18	—
19	Warning 19	—
20	Warning 20	—
21	Aux Power Warn	Indicates auxiliary Power was has dipped below 19 Volts. *Not available in units with Integrated Power Supply.*
22	Warning 22	
…		
31	FanRPMWarning	Internal fan is too slow, or needed to be kick started
…		
41	BrakeConfig	Values for params 58 - 63 and/or param 49 are invalid
42	IOPointConfig	Values for params 58 - 63 and/or param 49 are invalid
43	ZIPConfig	Values for params 114 - 129 result in ZIP data mapping overlap
44	JamConfig	Param 72 JamTripLevel is less than Param 73 JamWarningLevel
45	UnderloadConfig	Param 78 ULTripLevel is greater than Param 79 ULWarningLevel
…		
75	Warning 75	

DeviceNet Interface Object

CLASS CODE 0x00B4

The following class attributes will be supported.

Attribute ID	Access Rule	Name	Data Type	Value
1	Get	Revision	UINT	2

A single instance of the DPI Alarm Object will be supported.

Attribute ID	Access Rule	Name	Data Type	Min/Max	Default	Description
15	Get/Set	Autobaud Enable	BOOL	0 -1	1	1= enabled; 0 = disabled
16	Get/Set	Consumed Assy	USINT	0 to 85	150 (drive 154)	See assembly instance definitions for legal values
17	Get/Set	Produced Assy	USINT	100 to 190	151 (drive 155)	See assembly instance definitions for legal values
19	Get/Set	Set to Defaults	BOOL	0 to 1	0	0=No action; 1=Reset
100	Get	Build	USINT			Firmware Build Number
101	Get	PTableinit errs	USINT			
103	Get	Fan Data Fan RPM Fan Tach Pulses Fan Control	Struct of UINT UINT WORD			
104	Get	Hardware Fault Data	Struct of WORD UINT UINT UINT	 Bit0 = Forward Status Bit1 = Reverse Status Bit 2 = Disconnect On Bit 3 = Brake Contactor Bits 5-13 = unused Bit 14 = CT Present error Bit 15 = Power 24 Status Board Error Present Status Board Total Error Present Conditions Status Board Total Read Errors		
105	Get	Boot Rev	STRUCT of USINT USINT	 Major rev Minor rev		
106	Get	NVS Object Init Errors	Struct of UINT Array of UINT	 Number of Errors List of CIP Objects that failed		
107	Get	Error Data Structure	Struct of DWORD DWORD DWORD			

The following common services will be implemented for the DeviceNet Interface Object.

Service Code	Implemented for:		Service Name
	Class	Instance	
0x0E	No	Yes	Get_Attribute_Single
0x10	No	Yes	Set_Attribute_Single

ZIP Object

CLASS CODE 0x032E

The following class attributes will be supported.

Attribute ID	Access Rule	NV	Name	Data Type	Description of Attribute	Semantics of Values
1	Get	NV	Revision	UINT		1
3	Get	NV	Number of Instances	UINT		5
8	Get	V	Instance List	Array of USINT	List of instances	A maximum of 255 instances may be supported.
9	Set	NV	ZIP Enable	BOOL	Enable/Disable ZIP for the device	0=disable 1=enable

ZIP Enable

Allows ZIP functionality to be enabled/disabled for the entire device. This parameter must be disabled before any changes to the ZIP configuration for the device can be made. The default value for this attribute is 0=disable. Upon enabling ZIP, the ZIP object checks that the produced and consumed assembly instances chosen for each ZIP producing and consuming connection contain the Zone Key (instance attribute #7). If any of the chosen assemblies does not contain the Zone Key in the last 2 bytes of the assembly data attribute, then the error code 0x0C (Object State Conflict) is returned by the Set service.

Five Instances of the ZIP object will be supported. Instances 1-4 are ZIP consumers, and Instance 5 is the ZIP producer.

Attribute ID	Access Rule	NV	Name	Data Type	Description of Attribute	Semantics of Values
1	Set*	NV	Zone Connection ID	UDINT	The Connection ID	*For producing connections, Set access not required.
2	Get	NV	Zone Health	BOOL	Health status of the connection	0=healthy 1=not healthy
3	Set* (Get for producers)	NV	Zone Point Mask	STRUCT of: USINT Array of BYTE	Masks individual bytes in a consumed message for use by in Zone Point Data table. Masking results in a byte packed image.	Struct of USINT = 4 Array[4] of BYTE Producers return USINT= 0
4	Set*	NV	Zone Point Offset	UINT	Specifies an offset into the 8-byte Zone Point Data table to place masked data.	*Get access for producers. Producers return UINT = 0
5	Set	NV	Zone RPI	UINT	Requested Packet Interval (RPI) of the producing or consuming connection. This value is placed in the Expected Packet Rate attribute of the connection	ms
6	Set	NV	Zone PIT	UINT	Production Inhibit Time (PIT) of producing connection object	ms Required for I/O client connections, except those with production trigger of Cyclic.
7	Get/Set*	NV	Zone Key	UINT	The security key attribute for the connection.	*Access Rule of Get only for producing connections.

Attribute ID	Access Rule	NV	Name	Data Type	Description of Attribute	Semantics of Values
8	Set	NV	ZIP Auto Run	BOOL	Configure the ZIP producing connection to auto-allocate on power-up	0=disable 1=enable
9	Get*	NV	Associated Connection Instance	UINT	The instance number of the connection object associated with this ZIP instance.	*For systems that dynamically allocate connections, the access rule can be Set.
10	Set	NV	Connection Path Length	UINT	Number of bytes of the "Connection Path" attribute.	
11	Set (prod) Get (cons)	NV	Connection Path	EPATH	Specifies an application object whose data is to be produced, or is to receive consumed data.	Consumed path: 21 0e 03 25 01 00 30 02 Produced path: Produced assy path
12	Set (cons) Get (prod)	NV	Data Size	UINT	The size of the data to be produced or consumed.	Consumed: 32 or 8 Procuced: size of produced assembly
13	Get*	NV	Connection Direction	BOOL	The direction of data flow for the connection instance represented by this instance.	0=Producing 1=Consuming *For systems that dynamically allocate connections, the access rule can be Set.
14	Set*	NV	Data Security Disable	BOOL	Enables data security checking for the connection. *Get access for producers. Producers return the value 0	0=enable 1=disable (Default = 0)
15	Set*	NV	Zone Analog Data Type	UINT	Data type from CIP Common Spec Table C-6.1 "Identification Codes of Elementary Data Types".	0xC7 = UINT
16	Set* (Get for producers)	NV	Zone Analog Mask	STRUCT of: USINT Array of BYTE	Masks individual data units of the type defined in the "Zone Analog Data Type" in a consumed message for use by in Zone Analog Data table. Each bit in a BYTE mask represents one unit (WORD, REAL, etc.) of consumed data	Struct of USINT = 2 Array[2] of BYTE Producers return USINT= 0
17	Set* (Get for producers)	NV	Zone Analog Offset	UINT	Specifies an offset into the 8-byte Zone Point Data table to place masked data.	*Get access for producers. Producers return UINT = 0
101	Set*	NV	Zone MAC ID	USINT	Reflects attribute 1 for ArmorStart LT	
103	Set*	NV	Point Mask	DWORD	Reflects attribute 3 for ArmorStart LT	This attribute matches the Array[4] structure element in attribute 3
114	Set*	NV	ZoneControl	BYTE	Choose consumed IO connection properties	Semantics of this bit enumerated value are the same as params 134-137
116	Set*	NV	Analog Mask	WORD	Reflects attribute 16 for ArmorStart LT	This attribute matches the Array[2] structure element in attribute 16

Attribute Symantics

1) Zone Connection ID - Contains the Consumed_Connection_Id attribute for the connection represented by this object instance. The default value will be 0xFFFF. For consuming connections, the value 0xFFFF disables the consumption of data for the connection. For producing connections, this value represents the connection ID on which production occurs. For predefined producing connections, this value is set to the producing Connection ID when Auto Run occurs at power-up, or upon allocation of the connection.

2) Zone Health - Indicates the health status of the zone connection. If the ZIP connection for the zone times out, this parameter is set to the value 1 = Not Healthy. Also, if Data Security is enabled and the Zone Key received in the consumed I/O message does not match the entered Zone Key attribute, 1 = Not Healthy is reported. For ZIP implementations that use predefined connection instances, this value is 0 = Healthy (the default value) when ZIP is disabled for the instance i.e. when the Zone Connection ID attribute is 0xFFFF. This value is 0 = Healthy when ZIP is disabled via the ZIP Enable class attribute.

3) Zone Point Mask - Allows for the selection of the consumed bytes within a consumed message for use by in the Zone Point Data Table. Each single bit in the mask represents a corresponding byte in the consumed message packet.

4) Zone Point Offset - Allows consumed data to be placed within the Zone Point Data Table. This offset is application-specific. For ArmorStart LT, it represents a byte offset into the Discrete Zone Point Data Table.

5) Zone RPI - The requested packet interval (in milliseconds) of the connection represented by this ZIP object instance. For DeviceNet implementations, this value is placed in the connection object Expected Packet Rate attribute. If a consuming connection does not receive data in 4 times this value, the connection times out, and the Zone Health attribute is set to the value 1 = Not Healthy. For producing connections, the expected packet rate specifies the heartbeat rate.

6) Zone PIT - The Production Inhibit Time (in milliseconds) associated with a connection.

7) Zone Key - For producing instances, this value is calculated by performing a CRC on all of the ZIP class and instance attributes, and all other device configuration values deemed necessary to insure the integrity and meaning of ZIP data produced on the network. The Identity Object device keys should always be included in the CRC calculation. For consuming instances, this is the value of the Zone Key calculated in the producing connection whose data is to be consumed. The ZIP consuming connection will validate the security key received within each consumed message against this stored value.

8) ZIP Auto Run - When enabled, the producing device creates and configures a producing connection at power-up. For initial ZIP implementations on DeviceNet, a connection is created, and the contents of the Allocation Information attribute in the DeviceNet Object are set accordingly. The connection is no longer available for allocation within the predefined

Group 2 connection set. A ZIP consuming device does not have to enable AutoRun ZIP if it is a consumer only or if a scanner is used to allocate the producing connections.

9) Associated Connection Instance - The instance number of the connection object associated with this ZIP instance. Initial DeviceNet implementations of the ZIP object will implement this attribute with Get access, and associate ZIP instances with predefined connection instances. Future implementations will be allowed to dynamically allocate connections and associate them with a ZIP instance. This attribute would then be implemented with Set access.

10) Connection Path Length - The number of bytes of the "Connection Path" attribute. For consuming connections, this value is written to the consumed_connection_path_length" attribute of the connection object when ZIP is enabled. For producing connections, this value is written to the "produced_connection_path_length" attribute of the connection object when ZIP is enabled.

11) Connection Path - For consuming connections, this attribute specifies the application object that is to receive the consumed data. This value is written to the "consumed_connection_path" attribute of the connection object when ZIP is enabled. For producing connections, this attribute specifies the application object whose data is to be produced. This value is written to the "produced_connection_path" attribute of the connection object when ZIP is enabled.

12) Data Size - The size (in bytes) of the data to be produced or consumed. If any of the "FragmentedIO" bits are set in the Zone Control attribute, this value is 32. If all "FragmentedIO" bits are clear in the Zone control Attributes, then this value is 8.

14) Data Security Disable - Enables/disables data security checking for the connection. Enabling data security protects against a ZIP producer being replaced and not having the correct ZIP configuration set. Enabling data security also protects against the consumption of data from the wrong device type. The default value for this attribute is 0=enabled.

15) **Zone Analog Data Type –** This attribute defines the analog data type used in the Zone Analog Data Table. Data type value codes are given in the CIP Common Spec Table "Identification Codes and Descriptions of Elementary Data Types". For ArmorStart LT this attribute returns the value 0xC7 = UINT.

16) Zone Analog Mask - Allows for the selection of the consumed data within a consumed message for use by in the Zone Analog Data Table. Each single bit in the mask represents a corresponding piece of analog data in the consumed message packet whose data type is given by the Zone Analog Data Type attribute. For ArmorStart LT, each bit in the Mask represents a WORD of consumed data

17) Zone Analog Offset - Allows consumed data to be placed within the Zone Analog Data Table. This offset is application-specific. For ArmorStart LT, it represents a WORD offset into the Zone Analog Data Table.

101) MAC ID - This attribute is used so that MAC ID can be entered for a consuming instance instead of Zone Connection ID in a EDS file. When this attribute is changed, the Zone Connection ID attribute value is updated to reflect the new Connection ID.

103) Point Mask - This attribute is used so that a mask value of type DWORD can be used in an EDS file parameter for the Zone Point Mask since arrays are not supported in EDS parameters. When this attribute is changed, the Zone Point Mask attribute value is updated to reflect the new mask value.

114) Zone Control - This attribute is used to choose the IO Connection type that is consumed, whether security is enabled and whether the consumed data is fragmented. See parameters 134-137 for the bit enumerations.

116) Analog Mask - This attribute is used so that a mask value of type WORD can be used in an EDS file parameter for the Zone Analog Mask since arrays are not supported in EDS parameters. When this attribute is changed, the Zone Analog Mask attribute value is updated to reflect the new mask value.

The following common services will be implemented for the ZIP Object.

Service Code	Implemented for:		Service Name
	Class	Instance	
0x0E	No	Yes	Get_Attribute_Single
0x10	No	Yes	Set_Attribute_Single

Behavior

The ZIP object provides a means for devices on a network to share I/O data directly without hard wiring them together, with, or without the use of a network scanner. A single ZIP enabled device can consume data directly from multiple devices on a network. A ZIP enabled device can also auto-allocate and configure producing I/O connections. In initial DeviceNet ZIP implementations, devices will be capable of auto-allocating and configuring unacknowledged COS connections, but the object definition does not preclude the use of other types of I/O connections for data production.

Instances of the ZIP object represent connection endpoints on a network. Two types of ZIP object instances are defined:

- ZIP Producers
- ZIP Consumers

Multiple instances of each instance type can exist, but in initial DeviceNet implementations, a single ZIP Producer will be used to allow for the automatic allocation and configuration of an unacknowledged COS connection. The automatic allocation of producing I/O connections only occurs if the Auto Run ZIP attribute for the ZIP Producer is enabled.

When a ZIP Producer is automatically allocated on power-up with the Auto Run Zip attribute set to the value 1=enable, the Master's MAC ID portion of the Allocation Information attribute in the DeviceNet Object is not changed. This indicates that the Predefined Master Slave connection set is still available for allocation by a network master.

The ZIP object also provides a means for ensuring that system configuration is secure. A 16-bit Zone Key instance attribute is calculated for each ZIP Producer, which is based on the device configuration and the Identity Object device key attributes. The Zone Key value is manually read by the user from the ZIP producer and manually written to the Zone Key of the ZIP Consumers that will consume the data as part of the system configuration process.

When the Data Security Enable attribute is enabled, ZIP Producers place the 16-bit Zone Key at the end of each produced I/O message. When security is disabled for a producer, the Zone Key is still placed at the end of each produced I/O message.

ZIP Consumers assume that the last 16 bits of each consumed I/O message contains the Zone Key. When the Data Security Enable attribute is enabled for a consumer, the consumed Zone Key is compared to the ZIP consumer's stored Zone Key. If they do not match, the Zone Health instance attribute is set to 1=not healthy. When security is disabled for a consumer, the consumed Zone Key is ignored.

The selection of I/O Assemblies that contain the 16 bit Zone Key is verified for both producing and consuming connections when ZIP is enabled.

Notes:

Using DeviceLogix™

Introduction

DeviceLogix is a stand-alone Boolean program that resides within the ArmorStart LT. The program is embedded in the product so that there is no additional module required to use this technology; DeviceLogix is programmed using the Add-On Profile for RSLogix™5000.

In addition to the actual programming, DeviceLogix can be configured to operate under specific situations. It is important to note that the DeviceLogix program will only run if the logic has been enabled and unswitched power is present. This can be done within the "Logic Editor." The operation configuration is accomplished by setting the "Network Override" and "Communication Override" parameter. The following information describes the varying levels of operation:

- If both overrides are disabled and the logic is enabled, the ONLY time DeviceLogix will run is if there is an active I/O connection with a master, i.e. the master is in Run mode. At all other times DeviceLogix will be running the logic, but will NOT control the state of the outputs.
- If the Network Override is enabled and the logic is enabled then DeviceLogix controls the state of the outputs when the PLC is in Run mode and if a network fault occurs.
- If the Communications Override is enabled and the logic is enabled, the device does not need any I/O connection to run the logic. As long as there are switched and unswitched power sources connected to the device, the logic will control the state of the outputs.

DeviceLogix Local Control Mode

In local control mode, the embedded DeviceLogix logic engine drives the local outputs and motor run/jog commands from a local DeviceLogix program. Local Control is completely independent of the any or all CIP connections. I/O and/or Explicit Message connections can exist in any state and they do not affect the user outputs or the run/jog commands for the motor. Local control mode is chosen by when the keypad "Auto LED" is on, "Network Override" is set "Communication Override" is set, and DeviceLogix is enabled.

I/O Networked Control Mode

In I/O networked control mode, local outputs and motor run/jog commands are received over a CIP I/O connection in the established state. I/O networked control mode is chosen when DeviceLogix is disabled, or when DeviceLogix is enabled and no user outputs or run commands are being driven in the DeviceLogix program.

DeviceLogix Programming

DeviceLogix has many applications and the implementation is typically only limited to the imagination of the programmer. Keep in mind that the application of DeviceLogix is only designed to handle simple logic routines.

DeviceLogix is programmed using simple Boolean math operators, such as AND, OR, NOT, timers, counters, latches, and analog values. Decision making is done by combining these Boolean operations with any of the available I/O. The inputs and outputs used to interface with the logic can come from the network or from the device hardware. Hardware I/O is the physical Inputs and Outputs located on the device such as push buttons and pilot lights that are connected to the ArmotStart LT. Refer to Table 33 - for complete list of DeviceLogix I/O functions.

There are many reasons to use the DeviceLogix functionality, but some of the most common are listed below:

- Increased system reliability
- Fast update times (1 - 2 ms possible)
- Improved diagnostics and reduced troubleshooting
- Operation independent of PLC or Network status
- Continue to run process in the event of network interruptions
- Critical operations can be safely shutdown through local logic

DeviceLogix Programming Example

The following example will show how to program a simple logic routine to interface the ArmorStart with a remote hard-wired startstop station. In this case the I/O is wired as shown in the table below.

Input/Output Table	
Bit	**Description**
Pt00	Start Button
Pt01	Stop Button
Out02	Run Forward

IMPORTANT Before programming logic, it is important to decide on the conditions under which the logic will run. The conditions can be defined by setting CommsOverride and NetworkOverride to the value that you want.

1. Refer to section “How to Add a New Module, Using the Add-On Profile” to configure the I/O. Then select the DeviceLogix section and create a program.

2. Click on the "**DeviceLogix**" tab. If you are on-line with a device, a dialog box will appear asking you to upload or download. Click on "**Upload**."

3. Click the "Start Logic Editor**"** button.

4. If programming off-line continue to step 5, otherwise click on the "**Edit**" button. Click "**Yes**" when asked if you want to Enter Edit Mode. Once in edit mode the entire list of Function Blocks will be displayed in the toolbar.

5. Left Click on the "**RSL**" function block. This is a reset dominate latch.

6. Move the cursor into the grid, and left click to drop the function onto the grid.

7. From the toolbar, Click on the "**Discrete Input**" button and select **Pt00** from the pull-down menu. This is the remote start button based on the example I/O table.

8. Place the input to the left of the RSL function. To drop the input on the page, left click on the desired position.

9. Place the mouse cursor over the tip of Pt00. The tip will turn green. Click on the tip when it turns green.

10. Move the mouse cursor toward the input of the RSL function. A line will follow the cursor. When a connection can be made, the tip of the RSL function will also turn green. Click the on Input and the line will be drawn from Pt00 to the Set Input of the RSL function.

Note: If this was not a valid connection, one of the pin tips would have turned red rather than green. Left double clicking on the unused portion of the grid or pressing the "**Esc**" key at any time will cancel the connection process.

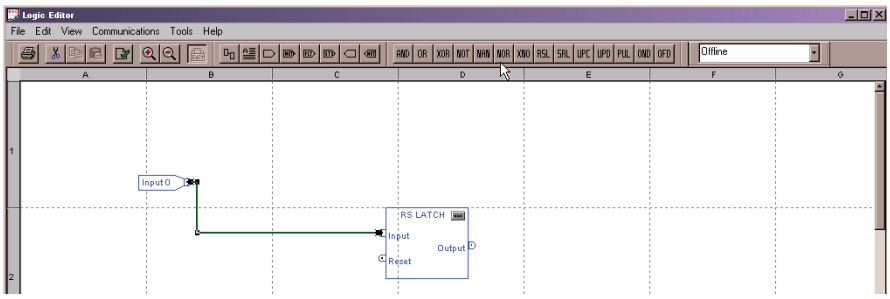

11. From the toolbar, Click on the "**Discrete Input**" button and select **Pt01** from the pull-down menu. This is the remote stop button based on the example I/O table.

12. Place the input to the left of the RSL function.

13. Connect the input to the reset input of the RSL latch.

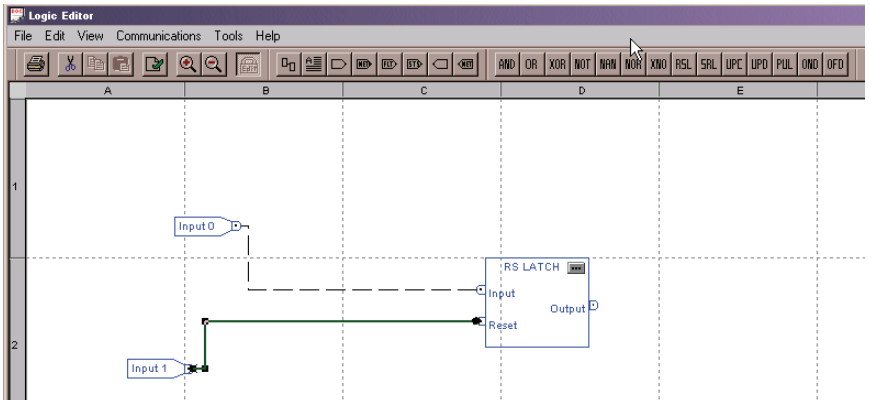

14. From the toolbar, Click on the "**Discrete Output**" button and select "**RunForward"** from the pull-down menu. RunForward is the relay controlling the coil of the contactor. Click OK.

15. Move the cursor into the grid and place the Output to the right of the RSL function block.

16. Connect the output of the "**RSL**" function block to **Run Fwd.**

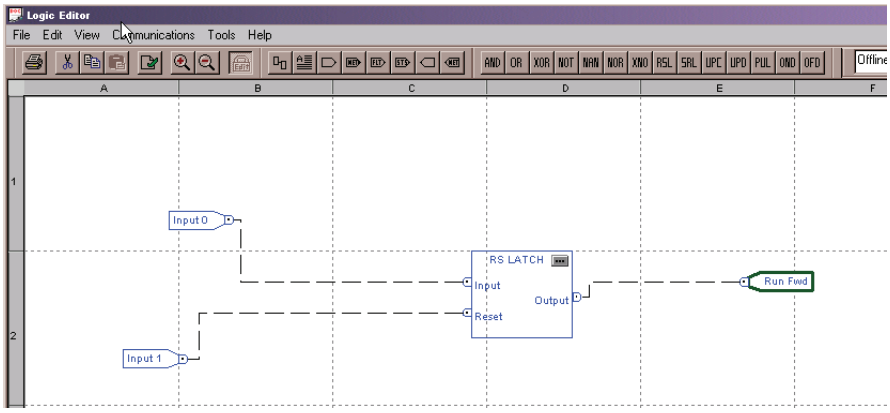

17. Click on the "**Verify**" button located in the toolbar or select "Logic Verify" from the "Tools" pull-down menu.

18. Click on the "**Edit**" button to toggle out of edit mode if online with a device.

19. Go to the pull-down menu in the right corner of the toolbar and select "**Download**".

Note: Ensure that the PLC key switch is in the Program position. If in any other position, the download will not occur and an error will be generated.

20. Press "**OK**" when told the download was successful.

21. Now from the same pull-down menu select "**Logic Enable On**."

22. The ArmorStart is now programmed and the logic is Active.

Table 33 - DeviceLogix Input and Output Variables

Element Type	Bulletin 290D	Bulletin 291D	Bulletin 294D
Consumed Network Data	PT00DeviceIn	PT00DeviceIn	PT00DeviceIn
	…	…	…
	PT15DeviceIn	PT15DeviceIn	PT15DeviceIn
	ZoneDataPt00	ZoneDataPt00	ZoneDataPt00
	…	…	…
	ZoneDataPt64	ZoneDataPt64	ZoneDataPt64
Discrete Input Points	PT00	PT00	PT00
	…	…	…
	PT05	PT05	PT05
Discrete Output Points	RunForward	RunForward	RunForward
	…	RunReverse	RunReverse
	Out00	Out00	Out00
	…	…	…
	Out05	Out05	Out05
			JogForward
			JogReverse
Produced Network Data	Pt00DeviceOut	Pt00DeviceOut	Pt00DeviceOut
	…	…	…
	Pt15DeviceOut	Pt15DeviceOut	Pt15DeviceOut
	ResetFault	ResetFault	ResetFault
	MotionDisable	MotionDisable	MotionDisable
	ForceSnapshot	ForceSnapshot	ForceSnapshot
	UserDefinedFault	UserDefinedFault	UserDefinedFault
	KeypadDisable	KeypadDisable	KeypadDisable
			Accel2
			Decel2
			BrakeRelease

Element Type	Bulletin 290D	Bulletin 291D	Bulletin 294D
Faults	OverloadTrip	OverloadTrip	OverloadTrip
	PhaseLossTrip	PhaseLossTrip	PhaseShortTrip
	UnderPowerTrip	UnderPowerTrip	UnderPowerTrip
	SensorShortTrip	SensorShortTrip	SensorShortTrip
	PhaseImbalTrip	PhaseImbalTrip	OverCurrentTrip
	NonVolMemoryTrip	NonVolMemoryTrip	NonVolMemoryTrip
			ParamSyncTrip
	JamTrip	JamTrip	DCBusFaults
	StallTrip	StallTrip	StallTrip
	UnderloadTrip	UnderloadTrip	UnderloadTrip
			GroundFault
			RestartRetries
			DriveHdwFault
	OutputShortTrip	OutputShortTrip	OutputShortTrip
	UserDefinedTrip	UserDefinedTrip	UserDefinedTrip
	HardwareFltTrip	HardwareFltTrip	HardwareFltTrip
Warnings	OverloadWarning	OverloadWarning	DriveParamInit
	UnderPowerWarn	UnderPowerWarn	UnderPowerWarn
	PhaseImbalWarn	PhaseImbalWarn	
	JamWarning	JamWarning	
	UnderLoadWarn	UnderLoadWarn	
	DNetPowerWarning	DNetPowerWarning	DNetPowerWarning
			FanWarning
	ConfigWarning	ConfigWarning	ConfigWarning

Element Type	Bulletin 290D	Bulletin 291D	Bulletin 294D
Misc Data	TripPresent	TripPresent	TripPresent
	WarningPresent	WarningPresent	WarningPresent
	RunningForward	RunningForward	RunningForward
	RunningReverse	RunningReverse	RunningReverse
	Ready	Ready	Ready
	NetControlStatus	NetControlStatus	NetControlStatus
			NetRefStatus
	CurrentFlowing	CurrentFlowing	AtReference
	KeyPadAuto	KeyPadAuto	KeyPadAuto
	KeyPadOff	KeyPadOff	KeyPadOff
	KeyPadHand	KeyPadHand	KeyPadHand
			KeyPadJogging
	DisconnectStatus	DisconnectStatus	DisconnectStatus
			BrakeStatus
	ExplicitCnxn	ExplicitCnxn	ExplicitCnxn
	IOConnection	IOConnection	IOConnection
	ExplicitCnxnFault	ExplicitCnxnFault	ExplicitCnxnFault
	IOCnxnFault	IOCnxnFault	IOCnxnFault
	IOCnxnIdle	IOCnxnIdle	IOCnxnIdle
	ZIP1Cnxn	ZIP1Cnxn	ZIP1Cnxn
	ZIP1CnxnFault	ZIP1CnxnFault	ZIP1CnxnFault
	ZIP2Cnxn	ZIP2Cnxn	ZIP2Cnxn
	ZIP2CnxnFault	ZIP2CnxnFault	ZIP2CnxnFault
	ZIP3Cnxn	ZIP3Cnxn	ZIP3Cnxn
	ZIP3CnxnFault	ZIP3CnxnFault	ZIP3CnxnFault
	ZIP4Cnxn	ZIP4Cnxn	ZIP4Cnxn
	ZIP4CnxnFault	ZIP4CnxnFault	ZIP4CnxnFault
Analog Input Point			NetInputFreq
Analog Output Point			CommandFreq
Misc Analog Input Data	PhaseL1Current	PhaseL1Current	OutputFreq
	PhaseL2Current	PhaseL2Current	CommandFreq
	PhaseL3Current	PhaseL3Current	OutputCurrent
	AverageCurrent	AverageCurrent	OutputVoltage
	%ThermalUtilized	%ThermalUtilized	DCBusVoltage
	SwitchedVolts OutputSourceV ❶	SwitchedVolts OutputSourceV ❶	SwitchedVolts OutputSourceV ❶
	UnswitchedVolts SensorSourceV ❶	UnswitchedVolts SensorSourceV ❶	UnswitchedVolts SensorSourceV ❶
Analog Consumed Network Data	AnalogDeviceIn	AnalogDeviceIn	AnalogDeviceIn
	ZoneDataAnalog0	ZoneDataAnalog0	ZoneDataAnalog0
	ZoneDataAnalog1	ZoneDataAnalog1	ZoneDataAnalog1
	ZoneDataAnalog2	ZoneDataAnalog2	ZoneDataAnalog2
	ZoneDataAnalog3	ZoneDataAnalog3	ZoneDataAnalog3
	ZoneDataAnalog4	ZoneDataAnalog4	ZoneDataAnalog4
	ZoneDataAnalog5	ZoneDataAnalog5	ZoneDataAnalog5
	ZoneDataAnalog6	ZoneDataAnalog6	ZoneDataAnalog6
	ZoneDataAnalog7	ZoneDataAnalog7	ZoneDataAnalog7
Analog Produced Network Data	AnalogDeviceOut	AnalogDeviceOut	AnalogDeviceOut

❶ IPS Units

Notes:

Rockwell Automation Support

Rockwell Automation provides technical information on the Web to assist you in using its products. At http://www.rockwellautomation.com/support/, you can find technical manuals, a knowledge base of FAQs, technical and application notes, sample code and links to software service packs, and a MySupport feature that you can customize to make the best use of these tools.

For an additional level of technical phone support for installation, configuration, and troubleshooting, we offer TechConnect[SM] support programs. For more information, contact your local distributor or Rockwell Automation representative, or visit http://www.rockwellautomation.com/support/.

Installation Assistance

If you experience a problem within the first 24 hours of installation, review the information that is contained in this manual. You can contact Customer Support for initial help in getting your product up and running.

United States or Canada	1.440.646.3434
Outside United States or Canada	Use the Worldwide Locator at http://www.rockwellautomation.com/support/americas/phone_en.html, or contact your local Rockwell Automation representative.

New Product Satisfaction Return

Rockwell Automation tests all of its products to ensure that they are fully operational when shipped from the manufacturing facility. However, if your product is not functioning and needs to be returned, follow these procedures.

United States	Contact your distributor. You must provide a Customer Support case number (call the phone number above to obtain one) to your distributor to complete the return process.
Outside United States	Please contact your local Rockwell Automation representative for the return procedure.

Documentation Feedback

Your comments will help us serve your documentation needs better. If you have any suggestions on how to improve this document, complete this form, publication RA-DU002, available at http://www.rockwellautomation.com/literature/.

Trademark List

Allen-Bradley, ArmorConnect, ArmorStart LT, ControlLogix, CompactLogix, PowerFlex, RSLinx, StepLogic, DeviceLogix, On-Machine, RSNetWorx, and RSLogix5000, are trademarks of Rockwell Automation, Inc. Trademarks not belonging to Rockwell Automation are property of their respective companies

Rockwell Otomasyon Ticaret A.Ş., Kar Plaza İş Merkezi E Blok Kat:6 34752 İçerenköy, İstanbul, Tel: +90 (216) 5698400

www.rockwellautomation.com

Power, Control and Information Solutions Headquarters

Americas: Rockwell Automation, 1201 South Second Street, Milwaukee, WI 53204-2496 USA, Tel: (1) 414.382.2000, Fax: (1) 414.382.4444
Europe/Middle East/Africa: Rockwell Automation NV, Pegasus Park, De Kleetlaan 12a, 1831 Diegem, Belgium, Tel: (32) 2 663 0600, Fax: (32) 2 663 0640
Asia Pacific: Rockwell Automation, Level 14, Core F, Cyberport 3, 100 Cyberport Road, Hong Kong, Tel: (852) 2887 4788, Fax: (852) 2508 1846

Rockwell Automation Publication 290D-UM001A-EN-P - June 2012

Copyright © 2012 Rockwell Automation, Inc. All rights reserved. Printed in the U.S.A.