Technical Data

Allen-Bradley

Feeder Disconnect and Combination Lighting Contactor Specifications

Bulletin Numbers 500FL, 500L, 500LP, 502L, 503L

Topic	Page
Electrical Ratings	2
Mechanical, Construction, and Environmental Ratings	3
Short Circuit, AC Coil, and Auxiliary Contact Ratings	4
Load-Life Curves	5
Approximate Dimensions: Open Type without Enclosures	6
Approximate Dimensions: Type 1, General Purpose	7…8
Approximate Dimensions: Type 3R/12, 4/4X	8…9
Approximate Dimensions: Type 3R, 7 & 9, Hazardous Locations	10…13

Additional Resources

These documents contain additional information concerning related products from Rockwell Automation.

Resource	Description
Industrial Automation Wiring and Grounding Guidelines, publication 1770-4.1	Provides general guidelines for installing a Rockwell Automation industrial system.
Product Certifications website, http://www.ab.com	Provides declarations of conformity, certificates, and other certification details.

You can view or download publications at http://www.rockwellautomation.com/literature/. To order paper copies of technical documentation, contact your local Allen-Bradley distributor or Rockwell Automation sales representative.

LISTEN. THINK. SOLVE.®

Allen-Bradley • Rockwell Software

Rockwell Automation

Electrical Ratings

NEMA Size	Load Voltage [V]	Continuous Current Rating [A]	Service Limit Current Rating [A]★	Maximum Hp Rating (Non-plugging and non-jogging duty)		Maximum Hp Rating (Plugging and jogging duty)‡		Transformer Primary Switching kVa Rating (Inrush Current ≤ 20 times Continuous Current)		Transformer Primary Switching kVa Rating (Inrush Current = 20 to 40 times Continuous Current)		Capacitor Switching kVAR§	Maximum Circuit Closing Inrush Current [A] Peak Including Offset
				1Ø	3Ø	1Ø	3Ø	1Ø	3Ø	1Ø	3Ø	3Ø	3Ø
00	115	9	11	1/3	—	1/4	—	—	—	—	—	—	87
	200			—	1-1/2	—	1	—	—	—	—	—	
	230			1	1-1/2	1/2	1	—	—	—	—	—	
	380			—	1-1/2	—	1	—	—	—	—	—	
	460			—	2	—	1-1/2	—	—	—	—	—	
	575			—	2	—	1-1/2	—	—	—	—	—	
0	115	18	21	1	—	1/2	—	0.6	—	0.3	—	—	140
	200			—	3	—	1-1/2	—	1.8	—	0.9	—	
	230			2	3	1	1-1/2	1.2	2.1	0.6	1	—	
	380			—	5	—	1-1/2	—	—	—	—	—	
	460			—	5	—	2	2.4	4.2	1.2	2.1	—	
	575			—	5	—	2	3	5.2	1.5	2.6	—	
1	115	27	32	2	—	1	—	1.2	—	0.6	—	—	288
	200			—	7-1/2	—	3	—	3.6	—	1.8	—	
	230			3	7-1/2	2	3	2.4	4.3	1.2	2.1	6	
	380			—	10	—	5	—	—	—	—	—	
	460			—	10	—	5	4.9	8.5	2.5	4.3	13.5	
	575			—	10	—	5	6.2	11	3.1	5.3	17	
1P	115	36	42	3	—	1-1/2	—	—	—	—	—	—	—
	230			5	—	3	—	—	—	—	—	—	—
2	115	45	52	3	—	2	—	2.1	—	1	—	—	483
	200			—	10	—	7-1/2	—	6.3	—	3.1	—	
	230			7-1/2	15	5	10	4.1	7.2	2.1	3.6	12	
	380			—	25	—	15	—	—	—	—	—	
	460			—	25	—	15	8.3	14	4.2	7.2	25	
	575			—	25	—	15	10	18	5.2	8.9	31	
3	115	90	104	7-1/2	—	7-1/2	—	4.1	—	2	—	—	947
	200			—	25	—	15	—	12	—	6.1	—	
	230			15	30	15	20	8.1	14	4.1	7.0	27	
	380			—	50	—	30	—	—	—	—	—	
	460			—	50	—	30	16	28	8.1	14	53	
	575			—	50	—	30	20	35	10	18	67	
4	115	135	156	—	—	—	—	6.8	—	3.4	—	—	1581
	200			—	40	—	25	—	20	—	10	—	
	230			—	50	—	30	14	23	6.8	12	40	
	380			—	75	—	50	—	—	—	—	—	
	460			—	100	—	60	27	47	14	23	80	
	575			—	100	—	60	34	59	17	29	100	
5	115	270	311	—	—	—	—	14	—	6.8	—	—	3163
	200			—	75	—	60	—	41	—	20	—	
	230			—	100	—	75	27	47	14	24	80	
	380			—	150	—	125	—	—	—	—	—	
	460			—	200	—	150	54	94	27	47	160	
	575			—	200	—	150	68	117	34	59	200	
6	115	540	621	—	—	—	—	27	—	14	—	—	6326
	200			—	150	—	125	—	81	—	41	—	
	230			—	200	—	150	54	94	27	47	160	
	380			—	300	—	250	—	—	—	—	—	
	460			—	400	—	300	108	188	54	94	320	
	575			—	400	—	300	135	234	68	117	400	
7	230	810	932	—	300	—	—	—	—	—	—	240	9470
	460			—	600	—	—	—	—	—	—	480	
	575			—	600	—	—	—	—	—	—	600	
8	230	1215	1400	—	450	—	—	—	—	—	—	360	14205
	460			—	900	—	—	—	—	—	—	720	
	575			—	900	—	—	—	—	—	—	900	
9	230	2250	2590	—	800	—	—	—	—	—	—	665	25380
	460			—	1600	—	—	—	—	—	—	1325	
	575			—	1600	—	—	—	—	—	—	1670	

★**Service-Limit Current Ratings —** The service-limit current ratings shown represent the maximum rms current, in amperes, which the controller shall be permitted to carry for protracted periods in normal service. At service-limit current ratings, temperature rises shall be permitted to exceed those obtained by testing the controller at its continuous current rating. The current rating of overload relays or the trip current of other motor protective devices used shall not exceed the service-limit current rating of the controller.

‡**Plugging or Jogging Service —** The listed horsepower ratings are recommended for those applications requiring repeated interruption of stalled motor current encountered in rapid motor reversal in excess of five openings or closings per minute and shall not be more than ten in a ten minute period.

§If maximum available current (at capacitor terminals) is greater than 3000 A, please contact your local Rockwell Automation sales office, Allen-Bradley distributor, or NEMA ICS-2 Standard.

Mechanical Ratings

NEMA Size	Mechanical Life (Millions of Operations)	Maximum Number of Auxiliary Contacts	Operating Time [ms]	
			Pick-up (Average)	Drop-out (Average)
00	10	5	20	16
0	10	8	21	16
1	10	8	22	14
2	10	8	27	13
3	5	8	37	20
4	5	8	27	20
5	5	8	25	18
6	5	4	25…79	10…22
7	—	8	88	40
8	—	8	88	45
9	—	8	118	84

Construction

NEMA Size	Wire Size for Power Terminals	Required Torque on Power Terminal Wire Clamps and Pressure Connectors or Lugs	Type of Power Terminal	Contact Material		Requirements for Sizing of Wire
				Power Contacts	Auxiliary Contacts	
00	#16…10 AWG	9 lb•in	Pressure terminals	Silver alloy	Silver	All wire rated 167 °F (75 °C) or higher must be sized per the local Electrical Code for 167°F (75 °C) wire.
0	#14…10 AWG	20 lb•in	Saddle or wire clamps			
1	#14…8 AWG	20 lb•in				
2	#14…4 AWG	45 lb•in	Pressure terminals			
3	#8…1/0 AWG	150 lb•in				
4	#6…4/0 AWG	275 lb•in				
5	#4 AWG…500 MCM	375 lb•in				
6	Lugs sold separately. See page 1-111.					
7						
8						
9	Direct bus connections only.					

Environmental

NEMA Size	Operating Position	Operating Temperature Range	Altitude	Corrosion-Resistance
00	Horizontal	Starters with eutectic alloy Overload relay –13…+149 °F (–25…+65 °C) Starters with SMP Overload relay –13…+131 °F (–25…+55 °C) (provided condensation is prevented)	10 000 feet before derating	All metal parts are treated for corrosion-resistance
0	Vertical			
1				
2				
3				
4				
5				
6	Horizontal			
7	Vertical			
8				
9				

Short Circuit Rating

Combination Lighting Contactors with Disconnect Switch: Bulletin 502L			
Lighting Contactor Rating [A]	Fuse Type	Available Short Circuit Amperes RMS Symmetrical [A]	Maximum Voltage [V]
20…100	H, K	5000	600
200…300	H, K	10 000	
20…300	J, R	100 000	
Combination Lighting Contactors with Circuit Breaker: Bulletin 503L			
Enclosure Type	Lighting Contactor Rating [A]	Available Short Circuit Amperes RMS Symmetrical [A]	Maximum Voltage [V]
1, 3R, 3R/4/12, 4/4X (stainless)	20…300	10 000	480
Unilock 3R, 7, & 9	20…300	10 000	
Bolted 3R, 7, & 9	20…300	10 000	
1, 3R, 3R/4/12, 4/4X (stainless)	20…300	25 000	600
Unilock 3R, 7, & 9	20…100	10 000	
Unilock 3R, 7, & 9	20…300	10 000	
Bolted 3R, 7, & 9	20…300	10 000	

AC Coil Data

NEMA Size	Operating Volt Amperes Burden [VA] 60 Hz Coils Inrush	Sealed	Heat Dissipation [W]	Coil Operating Limits
00	70	8	2.7	85…110%
0	192	29	5.9	
1 & 1P	192	29	5.9	
2 (2…3 poles)	240	29	5.9	
2 (4…5 poles)	315	38	5.9	
3 (2…3 poles)	660	45	10	
3 (4…5 poles)	840	58	10	
4 (2…3 poles)	1225	69	14.8	
4 (4…5 poles)	1490	96	14.8	
5 (Series L)	1490	96	19.8	
6★	4860	254	65.7	
6 (Interposing relay)	52.44	3.96	—	
7‡	Economized DC Coil		—	
7 (Interposing relay)	74.40	9.84	—	
8§	Economized DC Coil		—	
8 (Interposing relay)	74.40	9.84	—	
9♣	Economized DC Coil		—	
9 (Interposing relay)	144	19.20	—	

★This rating is for the size 6 contactor coil only. All starters are shipped with an interposing relay as standard.
‡Size 7 starters are shipped with a 250 VA control circuit transformer and an interposing relay with a 120V coil. Voltage is then rectified to DC for the contactor coil.
§Size 8 starters are shipped with a 350 VA control circuit transformer and an interposing relay with a 120V coil. Voltage is then rectified to DC for the contactor coil.
♣Size 9 starters are shipped with a 750 VA control circuit transformer and an interposing relay with a 120V coil. Voltage is then rectified to DC for the contactor coil.

Auxiliary Contacts (NEMA A600 and P300) — Bulletin 595, 596

Maximum AC Contact Rating Per Pole						
AC Rating Designation	Maximum Voltage 60 or 50 Hz	[A] Make	[A] Break	Continuous Carrying Current [A]	[VA] Make	[VA] Break
A600	120	60	6	10	7200	720
	240	30	3	10	7200	720
	480	15	1.5	10	7200	720
	600	12	1.2	10	7200	720

Maximum DC Contact Rating Per Pole for 595, 596 Auxiliary Contacts (Maximum Continuous Carrying Current is 5 A)			
DC Rating Designation	125V DC	250V DC	600V DC
P300	0.55 A	0.55 A (Requires 2 Contacts in Series)	—
	1.1 A (Requires 2 Contacts in Series)		

Load-Life Curves

Bulletin 500 Line contactors and starters are designed to provide superior performance in a variety of applications. These load-life curves are based on Rockwell Automation tests according to the requirements defined in IEC 947-4. Actual contact life may vary based on the application, duty cycle, and environmental conditions from that indicated by the curves.
To find the contactor's estimated electrical life, follow these guidelines:

- Choose the appropriate graph that most closely approximates the utilization category of the application.
- Locate the intersection of the life-load curve of the appropriate contactor with the application's operational current (I^e) found on the horizontal axis.
- Read the estimated contact life in millions of operations along the vertical axis.

Contact Life for Mixed Utilization Categories AC3 and AC4

In many applications, the utilization category cannot be defined as either purely AC3 or AC4. In those applications, the electrical life of the contactor can be estimated from the following equation:

$$L_{mixed} = \frac{L_{AC3}}{1 + P_{AC4}\left(\frac{L_{AC3}}{L_{AC4}} - 1\right)}$$

Where:

L_{mixed} = Approximate contact life for a mixed AC3/AC4 utilization category application

L_{AC3} = Approximate contact life in operations for AC3 utilization category (from AC3 life-load curves below)

L_{AC4} = Approximate contact life in operations for AC4 utilization category (from AC4 life-load curves below)

P_{AC4} = Percentage of AC4 operations

Utilization Categories

Category	Typical Duty
AC3	Starting of squirrel cage motors and switching off only after the motor is up to speed.
AC4	Starting of squirrel cage motors with inching and plugging duty.

Bulletin 500 Load/ Life Curves — AC3 and AC4

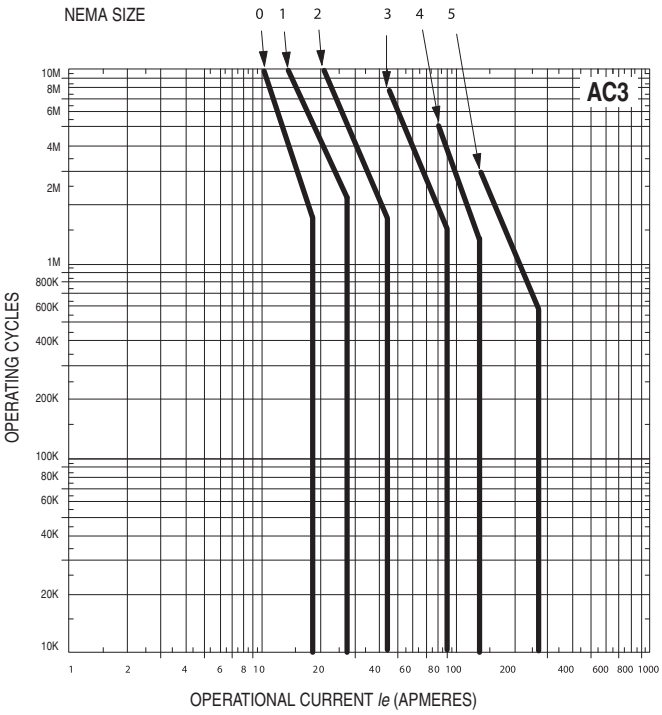

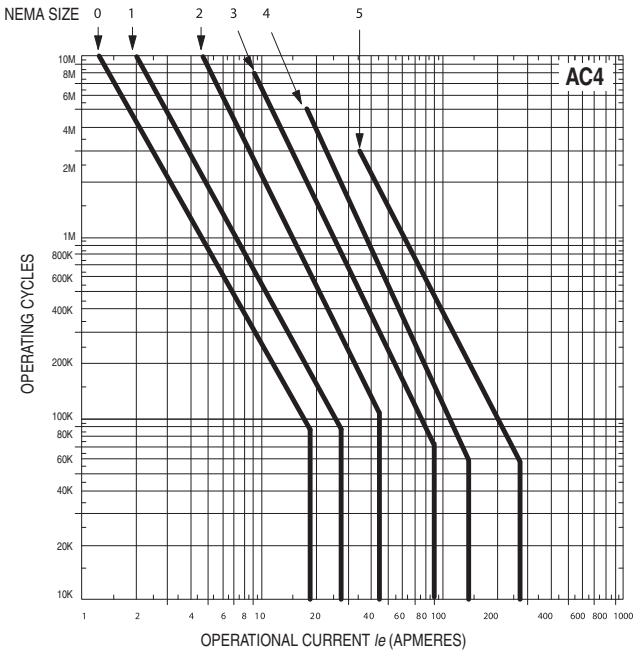

Approximate dimensions are shown in inches (millimeters). Dimensions are not intended to be used for manufacturing purposes.

Open Type without Enclosure for Bulletins 500FL, 500L, and 500LP

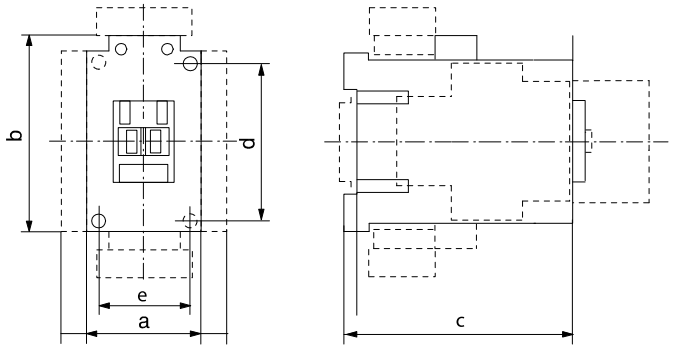

Sizes 00

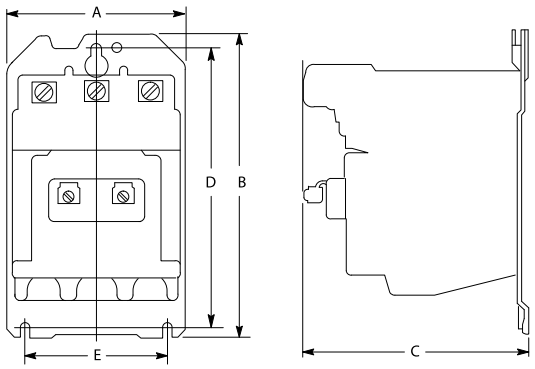

Sizes 0...5

Note: Top mounting hole on Size 00 is 1/4 in. (6.35 mm) to the left of centerline on Open Type. Mounting screws: 3…#10 for sizes 0…2, 1/4…#20, or 5/16…#18 for sizes 3…5.

NEMA Size	Number of Switching Poles		Dimensions in Inches (Millimeters)					Approximate Shipping Weight [lb (kg)]
	Bulletin 500FL	Bulletin 500L-500LP	A Width	B Height	C Depth	D	E	
00 5/10A	1-2-3	2…3	1-25/32 (45)	3-3/16 (81)	3-11/64 (80.5)	2-23/64 (60)	1-25/64 (35)	1 (0.45)
0…1 15/20A 30A	2…3	2…3	3-9/16 (90.5)	6 (152)★	4-15/32 (113)	5-1/2 (140)	2-3/4 (70)	3 (1.4)
	4	—	4-3/8 (111)					3-1/2 (1.6)
	5	4	4-15/16 (125)					4-3/4 (2.2)
2 60A	2…3	2…3	3-15/16 (100)	6-27/32 (173)★	4-23/32 (120)	6-5/16 (160)	3-5/32 (80)	4 (1.8)
	4	—	4-31/32 (126)					4-3/4 (2.2)
	5	4	5-1/2 (140)					6-1/4 (2.8)
3 100A	2…3	2…3	6-1/8 (155.5)	10-3/64 (255)	6-19/32 (167.4)	8-21/32 (220)	5-33/64 (140)	14.5 (6.5)
	4	—	7-15/16 (201.6)					16 (7.25)
	5	4	8-13/16 (223.8)					18 (8)
4 200A	2…3	2…3	7 (178)	12-11/64 (309)‡	7-13/16 (198.4)	9-27/32 (250)	6-5/16 (160)	22 (10)
	4	—	9-1/16 (230.2)					25.5 (11.5)
	5	4	10-7/16 (265.1)					28.5 (13)
5 300A	2…3	2…3	7 (178)	13-25/64 (340)§	8-17/32 (217)	9-27/32 (250)	6-5/16 (160)	24 (10.9)

★For Feed-Through Wiring this dimension is 6-15/16 in. (176 mm).
‡For Feed-Through Wiring this dimension is 11-11/16 in. (297 mm).
§For Feed-Through Wiring this dimension is 12-37/64 in. (320 mm).

Approximate dimensions are shown in inches (millimeters). Dimensions are not intended to be used for manufacturing purposes.

Type 1 General Purpose Lift-Off Enclosure for Bulletin 500L

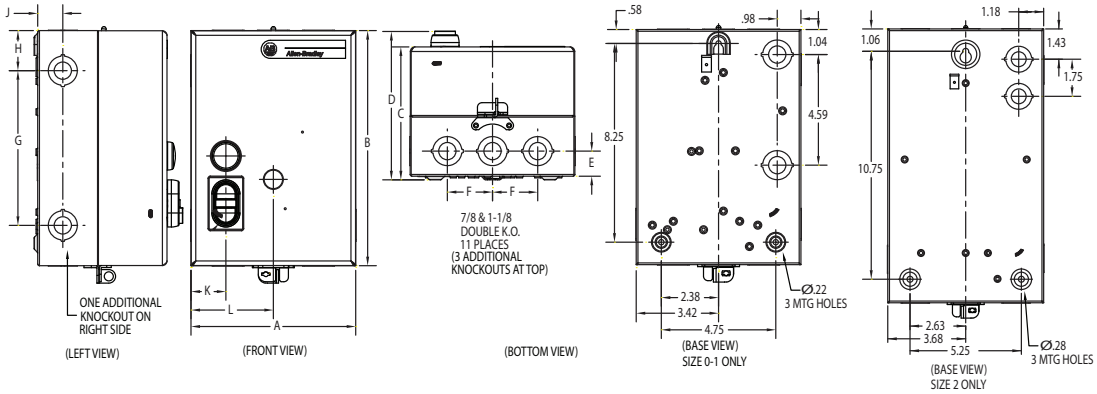

Current Rating	Dimensions in Inches (Millimeters)										
	A Width	B Height	C Depth	D	E	F	G	H	J	K	L
5/10 A 15/20 A 30 A	6.84 (174)	9.76 (248)	5.52 (140)	6.16 (156)	1.04 (26)	1.88 (48)	6.42 (163)	1.66 (42)	1.04 (26)	1.45 (37)	3.42 (87)
60 A	7.35 (187)	12.91 (328)	5.53 (140)	6.24 (158)	1.27 (32)	2.38 (60)	8.88 (226)	1.94 (49)	1.27 (32)	1.49 (38)	3.68 (93)

Type 1 Hinged Enclosure — with or without Control Transformer for Bulletins 500L and 500LP, 3-…5-Pole

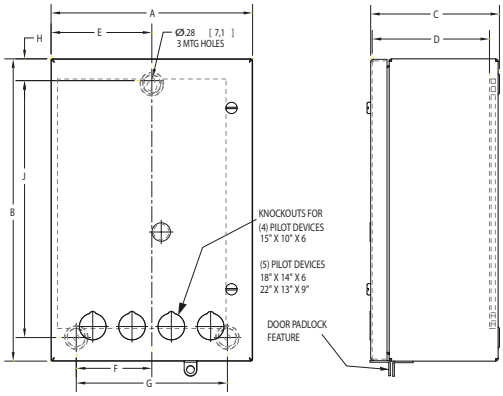

Current Rating	Bulletin No.	Dimensions in Inches (Millimeters)								
		A Width	B Height	C Depth	D	E Mounting	F Mounting	G Mounting	H	J (Mounting)
60 A	500L & 500LP w/o transformer	10.00 (254)	15.00 (381)	6.39 (162)	5.82 (148)	5.00 (127)	3.75 (95)	7.50 (191)	1.08 (27)	12.75 (324)
60 A	500L & 500LP w/ transformer	14.00 (356)	18.00 (457)	6.39 (162)	5.83 (148)	7.00 (178)	5.75 (146)	11.50 (292)	1.00 (25)	15.75 (400)
100 A	500L & 500LP	13.00 (330)	22.00 (559)	8.50 (216)	7.89 (201)	6.50 (165)	5.25 (133)	10.50 (267)	1.08 (27)	19.75 (502)

Note: For Types 3R/12, 4/4X, 4X, and Bolted Type 7 & 9 and 3R, 7 & 9 dimensions, please contact your local Rockwell Automation sales office or Allen-Bradley distributor.

Approximate dimensions are shown in inches (millimeters). Dimensions are not intended to be used for manufacturing purposes.

Type 1 (Enclosure Code "A") General Purpose Painted Enclosure for Bulletins 500L, 502L, and 503L

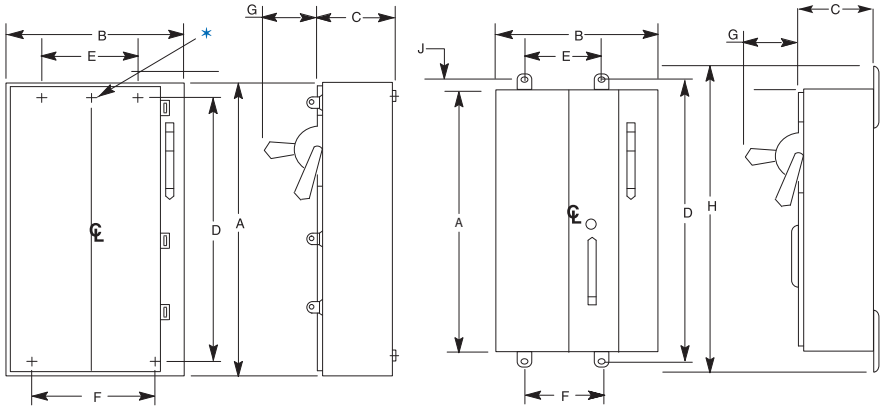

Size 1…4 *Size 5*

NEMA Size	Bulletin No.	Approximate Dimensions in Inches (Millimeters)							Approx. Shipping Weight [lb (kg)]
		A Height	B Width	C Depth	D Mounting	E Mounting	F Mounting	G Handle Depth	
0...2	502L, 503L	27.50 (968)	10.50 (267)	8.25 (210)	25.13 (639)	★	5.25 (133)	5.56 (141)	40 (18.14)
3	502L, 503L	30 (762)	20.5 (521)	9.88 (251)	27.63 (702)	15.25 (387)	15.25 (387)	5.56 (141)	90 (40.82)
4	500L, 503L								
4	500LP, 502L	50 (1270)	22 (559)	11.19 (284)	47.63 (1210)	15.25 (387)	15.25 (387)	5.56 (141)	250 (113.4)
5	500L								
5	502L, 503L	56 (1422)	30.5 (775)	13.79 (350)	57.63 (1463)	20 (508)	25.25 (641)	7.62 (194)	360 (163.3)
6	500L								

★Sizes 0, 1, and 2 have one top mounting hole located on the center line. Larger size enclosures have two top mounting holes located as shown.

Type 3R/12, 4/4X Enclosure — with or without Control Transformer for Bulletins 500L and 500LP, 3-…5-Pole

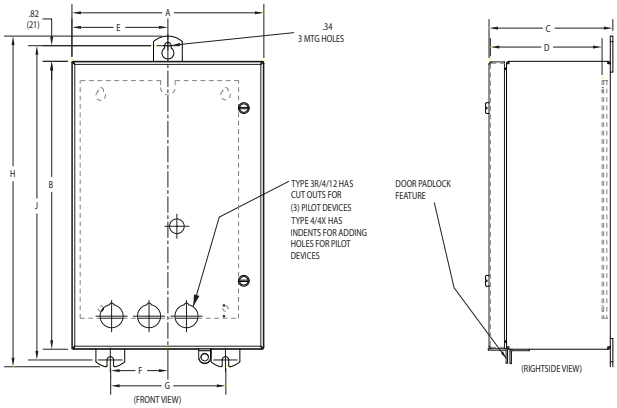

Current Rating	Bulletin No.	Approximate Dimensions In Inches (Millimeters)								
		A Width	B Height	C Depth	D	E Mounting	F Mounting	G Mounting	H	J Mounting
60 A	500L & 500LP w/o transformer	10.00 (254)	15.00 (381)	6.45 (164)	5.82 (148)	5.00 (127)	3.00 (76)	6.00 (152)	17.23 (438)	16.38 (416)
60 A	500L & 500LP w/ transformer	14.00 (356)	18.00 (457)	6.45 (164)	5.83 (148)	7.00 (178)	5.00 (127)	10.00 (254)	20.23 (514)	19.38 (492)
100 A	500L & 500LP	13.00 (330)	22.00 (559)	8.57 (218)	7.89 (201)	6.50 (165)	4.43 (113)	9.00 (229)	24.23 (615)	23.38 (594)

Approximate dimensions are shown in inches (millimeters). Dimensions are not intended to be used for manufacturing purposes.

Type 3R/4/12 (Enclosure Codes "D", "F", and "J") Rainproof, Dusttight — Industrial Use Enclosures for Bulletins 500L, 502L, 503L

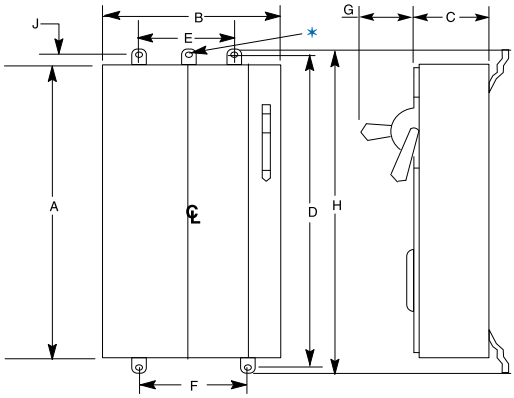

NEMA Size	Bulletin No.	Approximate Dimensions in Inches (Millimeters)									Approx. Shipping Weight [lb (kg)]
		A Height	B Width	C Depth	D Mounting	E Mounting	F Mounting	G Handle Depth	H	J	
0...2	503L	27.50 (698)	10.50 (267)	8.25 (210)	28.88 (733)	★	5.25 (133)	5.56 (141)	29.88 (759)	0.81 (21)	40 (18.14)
3	503L	30 (762)	20.5 (521)	10.19 (259)	31.38 (797.05)	15.25 (387)	15.25 (387)	5.56 (141)	32.38 (822)	0.81 (21)	90 (40.82)
4	500L										
4	500LP, 502L	50 (1270)	22 (559)	11.5 (292)	51.38 (1305)	15.25 (387)	15.25 (387)	5.56 (141)	52.38 (1330)	0.71 (18)	250 (113.4)
5	500L										
5	502L, 503L	56 (1422)	30.5 (775)	13.79 (350)	57.63 (313)	20 (508)	25.25 (641)	7.62 (194)	62.62 (1590)	1 (25.4)	360 (163.3)
6	500L										

★Sizes 0, 1, and 2 have one top mounting hole located on the center line. All sizes in large enclosures have two top mounting holes located as shown.

Type 4/4X (Enclosure Codes "C") Stainless Steel — Industrial Use Enclosures for Bulletins 500L, 502L, and 503L

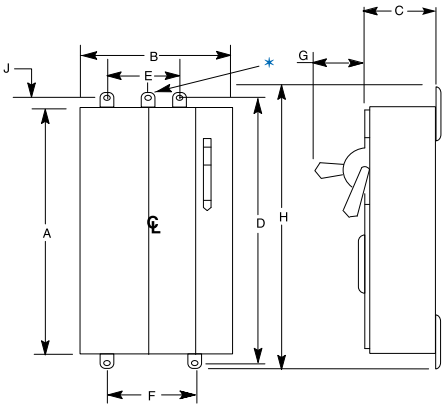

NEMA Size	Bulletin No.	A Height	B Width	C Depth	D Mounting	E Mounting	F Mounting	G Handle Depth	H	J	Approx. Shipping Weight [lb (kg)]
0...2	502L, 503L	27.50 (698)	10.50 (267)	8.25 (210)	28.88 (733)	★	7 (178)	5.56 (141)	29.75 (756)	0.81 (21)	40 (18.14)
3	502L, 503L	30 (762)	20.5 (521)	9.88 (251)	31.38 (797)	17 (432)	17 (432)	5.56 (141)	32.26 (819)	0.81 (21)	90 (40.82)
4	500L, 503L										
4	500LP, 502L	50 (1270)	22 (559)	11.19 (284)	51.38 (1305)	18.5 (470)	18.5 (470)	5.56 (141)	52.26 (1327)	0.81 (21)	250 (113.4)
5	500L										
5…6	502L, 503L	56 (1422)	30.5 (775)	12.34 (313)	57.63 (1464)	20 (508)	25.25 (641)	5.56 (141)	58.62 (1489)	1 (25.4)	360 (163.3)
6	500L										

★Sizes 0, 1, and 2 have one top mounting hole located on the center line. All sizes in large enclosures have two top mounting holes located as shown.

Approximate dimensions are shown in inches (millimeters). Dimensions are not intended to be used for manufacturing purposes.

Bolted Enclosures — Type 3R, 7 & 9, Class I, Groups C & D, Class II, Groups E, F, & G — Divisions 1 & 2 for Bulletin 500L Contactors

NEMA Size	Bulletin 500L	
	with CCT★	without CCT★
0	Figure 2C	Figure 2A
1	Figure 2C	Figure 2A
2	Figure 2C	Figure 2B
3	Figure 2D	Figure 2C
4	Figure 2E	Figure 2E
5	Figure 2F	Figure 2F

★CCT=Control circuit transformer

Figure 2A

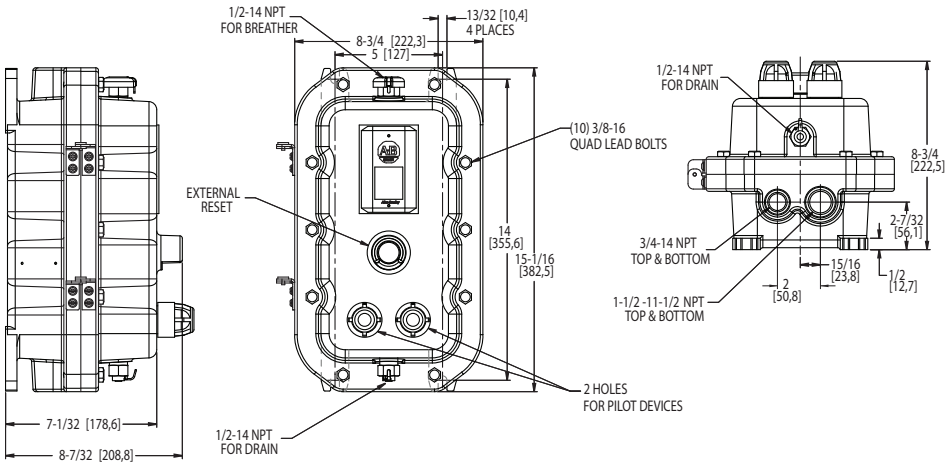

Figure 2B

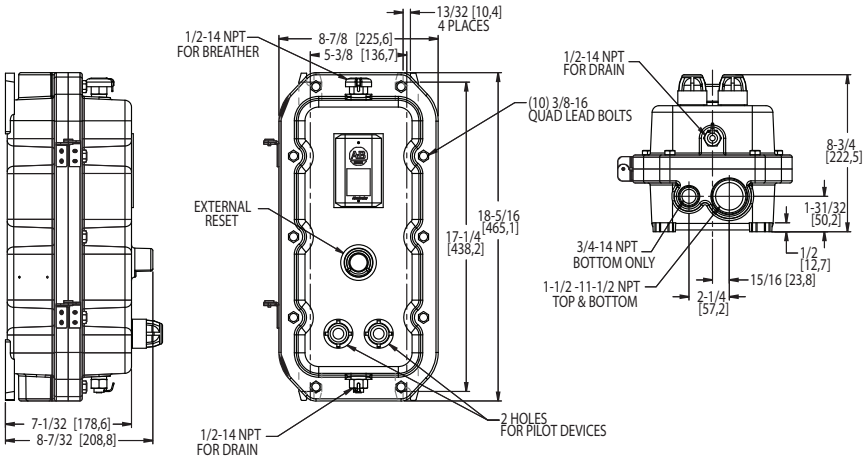

Figure 2C

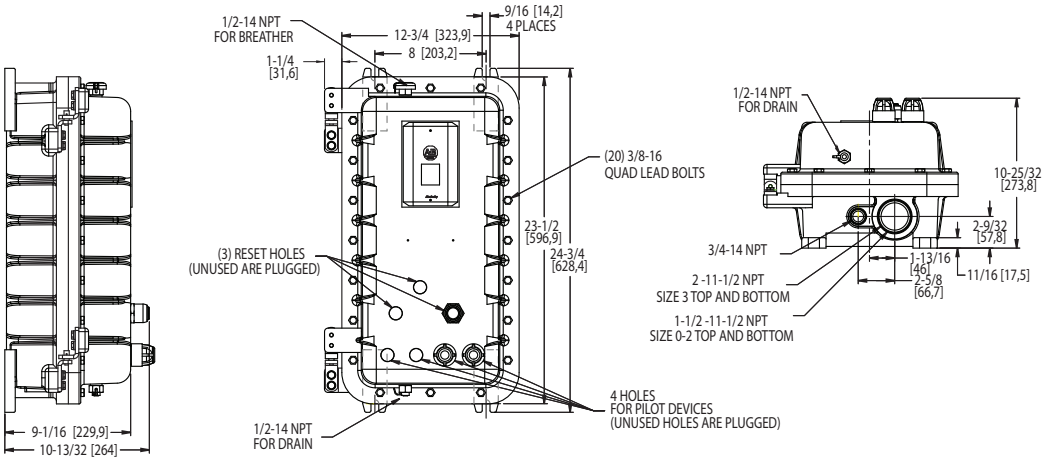

Approximate dimensions are shown in inches (millimeters). Dimensions are not intended to be used for manufacturing purposes.

Bolted Enclosures — Type 3R, 7 & 9, Class I, Groups C & D, Class II, Groups E, F, & G — Divisions 1 & 2 for Bulletin 500L Contactor (Continued)

NEMA Size	Bulletin 500L	
	with CCT★	without CCT★
0	Figure 2C	Figure 2A
1	Figure 2C	Figure 2A
2	Figure 2C	Figure 2B
3	Figure 2D	Figure 2C
4	Figure 2E	Figure 2E
5	Figure 2F	Figure 2F

★CCT=Control circuit transformer

Figure 2D

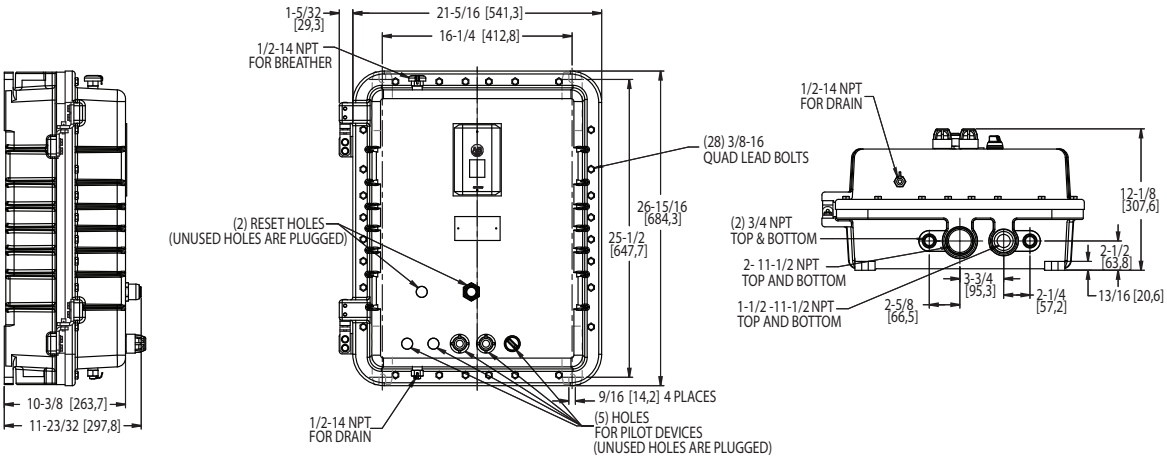

Figure 2E

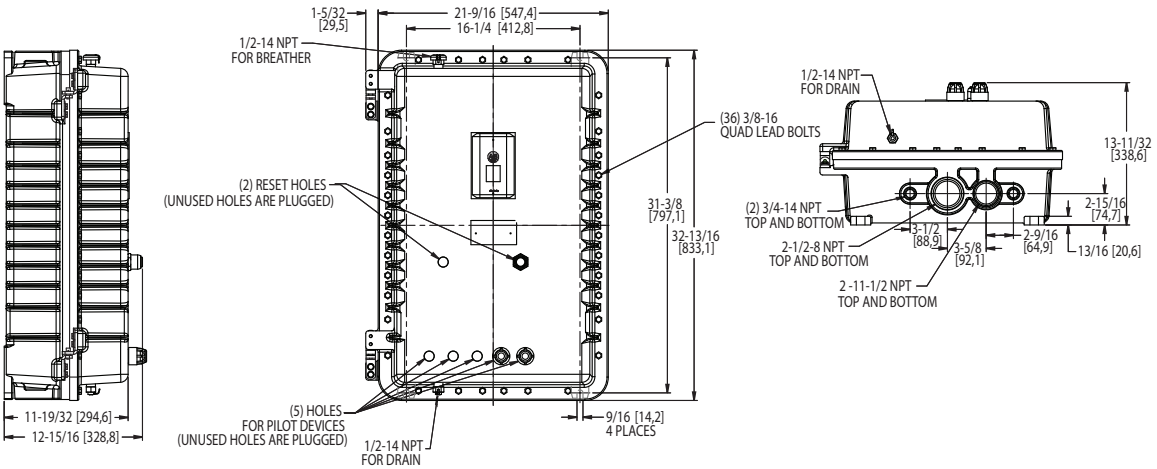

Figure 2F

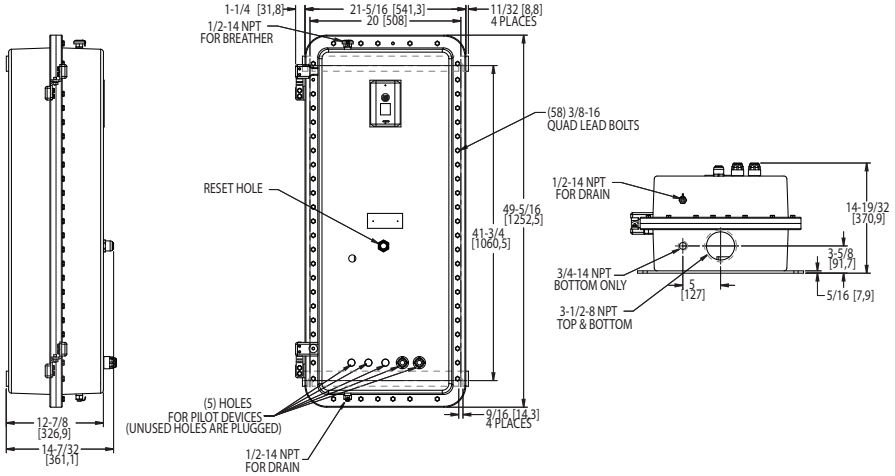

Approximate dimensions are shown in inches (millimeters). Dimensions are not intended to be used for manufacturing purposes.

Bolted Enclosures — Type 3R, 7 & 9, Class I, Groups C & D, Class II, Groups E, F, & G — Divisions 1 & 2 for Bulletins 503, 503L, 507, 513 Starters

NEMA Size	Bulletin 503L	
	with CCT★	without CCT★
0	Figure 3A	Figure 3A
1	Figure 3A	Figure 3A
2	Figure 3A	Figure 3A
3	Figure 3B	Figure 3B
4	Figure 3C	Figure 3C
5	Figure 3D	Figure 3D

★CCT=Control circuit transformer
‡Figure 3A should be used for 80VA maximum transformers.

Figure 3A

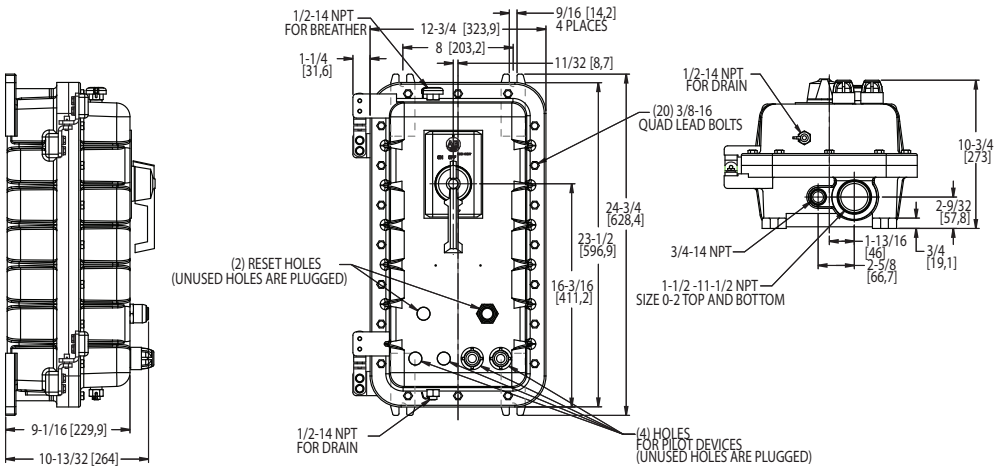

Figure 3B

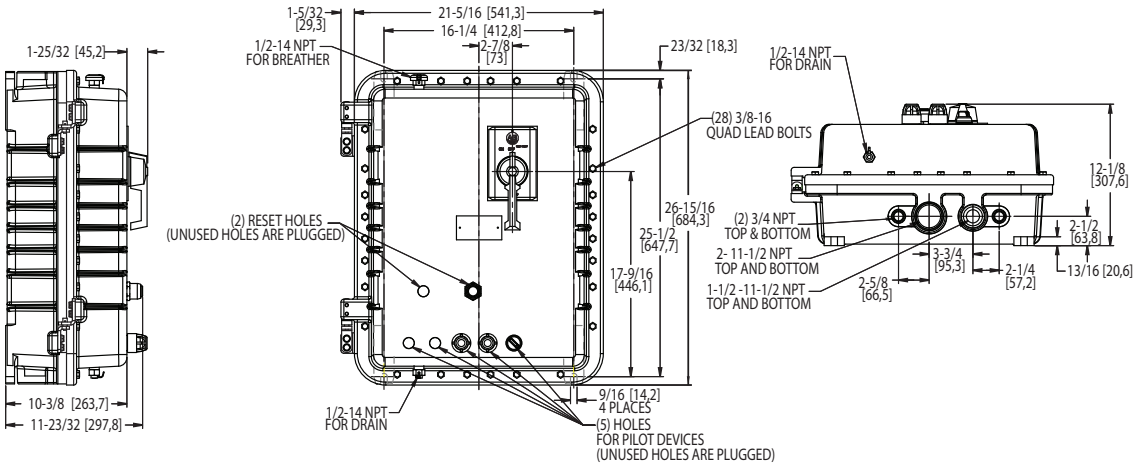

Approximate dimensions are shown in inches (millimeters). Dimensions are not intended to be used for manufacturing purposes.

Bolted Enclosures — Type 3R, 7 & 9, Class I, Groups C & D, Class II, Groups E, F, & G — Divisions 1 & 2 for Bulletins 503, 503L, 507, 513 Starters (Continued)

NEMA Size	Bulletin 503L	
	with CCT★	without CCT★
0	Figure 3A	Figure 3A
1	Figure 3A	Figure 3A
2	Figure 3A	Figure 3A
3	Figure 3B	Figure 3B
4	Figure 3C	Figure 3C
5	Figure 3D	Figure 3D

★CCT=Control circuit transformer

Figure 3C

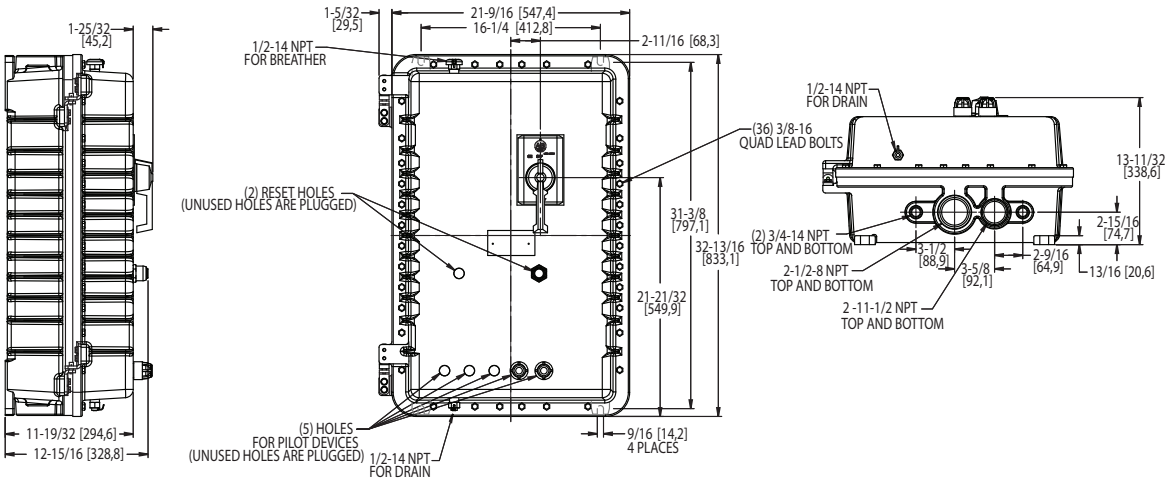

Figure 3D

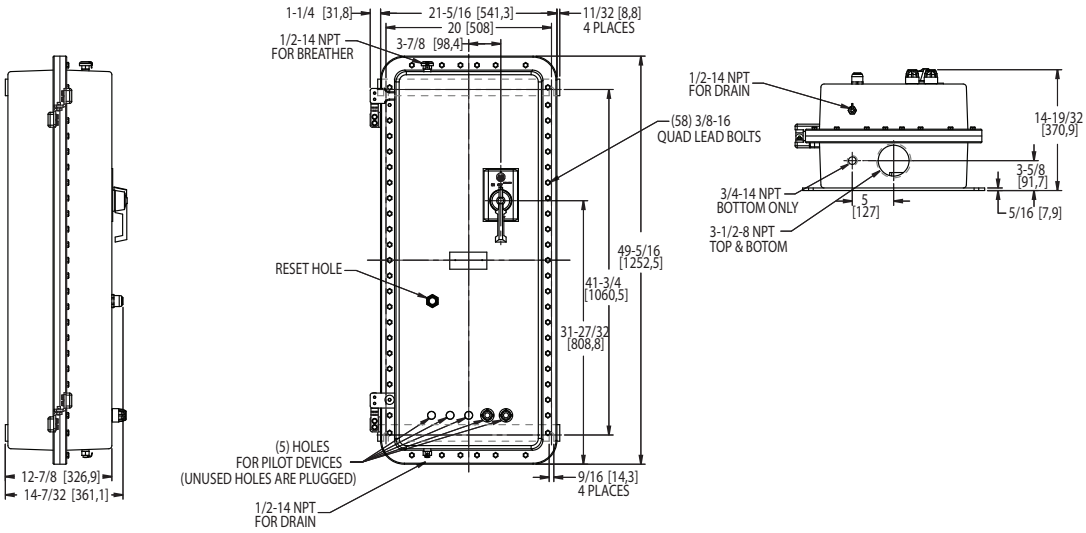

Important User Information

Read this document and the documents listed in the additional resources section about installation, configuration, and operation of this equipment before you install, configure, operate, or maintain this product. Users are required to familiarize themselves with installation and wiring instructions in addition to requirements of all applicable codes, laws, and standards.

Activities including installation, adjustments, putting into service, use, assembly, disassembly, and maintenance are required to be carried out by suitably trained personnel in accordance with applicable code of practice.

If this equipment is used in a manner not specified by the manufacturer, the protection provided by the equipment may be impaired.

In no event will Rockwell Automation, Inc. be responsible or liable for indirect or consequential damages resulting from the use or application of this equipment.

The examples and diagrams in this manual are included solely for illustrative purposes. Because of the many variables and requirements associated with any particular installation, Rockwell Automation, Inc. cannot assume responsibility or liability for actual use based on the examples and diagrams.

No patent liability is assumed by Rockwell Automation, Inc. with respect to use of information, circuits, equipment, or software described in this manual.

Reproduction of the contents of this manual, in whole or in part, without written permission of Rockwell Automation, Inc., is prohibited.

Documentation Feedback

Your comments will help us serve your documentation needs better. If you have any suggestions on how to improve this document, complete this form, publication RA-DU002, available at http://www.rockwellautomation.com/literature/.

Allen-Bradley, Rockwell Software, Rockwell Automation, and LISTEN. THINK. SOLVE are trademarks of Rockwell Automation, Inc.
Trademarks not belonging to Rockwell Automation are property of their respective companies.

Rockwell Otomasyon Ticaret A.Ş., Kar Plaza İş Merkezi E Blok Kat:6 34752 İçerenköy, İstanbul, Tel: +90 (216) 5698400

www.rockwellautomation.com

Power, Control and Information Solutions Headquarters

Americas: Rockwell Automation, 1201 South Second Street, Milwaukee, WI 53204-2496 USA, Tel: (1) 414.382.2000, Fax: (1) 414.382.4444
Europe/Middle East/Africa: Rockwell Automation NV, Pegasus Park, De Kleetlaan 12a, 1831 Diegem, Belgium, Tel: (32) 2 663 0600, Fax: (32) 2 663 0640
Asia Pacific: Rockwell Automation, Level 14, Core F, Cyberport 3, 100 Cyberport Road, Hong Kong, Tel: (852) 2887 4788, Fax: (852) 2508 1846

Publication 500-TD013C-EN-P - December 2014
Supersedes 500-TD013B-EN-P September 2014

Copyright © 2014 Rockwell Automation, Inc. All rights reserved. Printed in the U.S.A.