User Manual

Allen-Bradley

ArmorStart® Distributed Motor Controller — Safety Version

Catalog Numbers 280D, 281D, 284D

Allen-Bradley • Rockwell Software

Rockwell Automation

Important User Information

Read this document and the documents listed in the additional resources section about installation, configuration, and operation of this equipment before you install, configure, operate, or maintain this product. Users are required to familiarize themselves with installation and wiring instructions in addition to requirements of all applicable codes, laws, and standards.

Activities including installation, adjustments, putting into service, use, assembly, disassembly, and maintenance are required to be carried out by suitably trained personnel in accordance with applicable code of practice.

If this equipment is used in a manner not specified by the manufacturer, the protection provided by the equipment may be impaired.

In no event will Rockwell Automation, Inc. be responsible or liable for indirect or consequential damages resulting from the use or application of this equipment.

The examples and diagrams in this manual are included solely for illustrative purposes. Because of the many variables and requirements associated with any particular installation, Rockwell Automation, Inc. cannot assume responsibility or liability for actual use based on the examples and diagrams.

No patent liability is assumed by Rockwell Automation, Inc. with respect to use of information, circuits, equipment, or software described in this manual.

Reproduction of the contents of this manual, in whole or in part, without written permission of Rockwell Automation, Inc., is prohibited.

Throughout this manual, when necessary, we use notes to make you aware of safety considerations.

	WARNING: Identifies information about practices or circumstances that can cause an explosion in a hazardous environment, which may lead to personal injury or death, property damage, or economic loss.
	ATTENTION: Identifies information about practices or circumstances that can lead to personal injury or death, property damage, or economic loss. Attentions help you identify a hazard, avoid a hazard, and recognize the consequence.
IMPORTANT	Identifies information that is critical for successful application and understanding of the product.

Labels may also be on or inside the equipment to provide specific precautions.

	SHOCK HAZARD: Labels may be on or inside the equipment, for example, a drive or motor, to alert people that dangerous voltage may be present.
	BURN HAZARD: Labels may be on or inside the equipment, for example, a drive or motor, to alert people that surfaces may reach dangerous temperatures.
	ARC FLASH HAZARD: Labels may be on or inside the equipment, for example, a motor control center, to alert people to potential Arc Flash. Arc Flash will cause severe injury or death. Wear proper Personal Protective Equipment (PPE). Follow ALL Regulatory requirements for safe work practices and for Personal Protective Equipment (PPE).

ArmorConnect, ArmorStart, ControlLogix, DeviceLogix, PLC, RSNetWorx, RSLogix 5000, and SLC are trademarks of Rockwell Automation, Inc.

Trademarks not belonging to Rockwell Automation are property of their respective companies.

European Communities (EC) Directive Compliance

If this product has the CE mark it is approved for installation within the European Union and EEA regions. It has been designed and tested to meet the following directives.

Low Voltage and EMC Directives

This product is tested to meet Council Directive 73/23/EEC Low Voltage and 89/336/EEC and Council Directive 89/336/EC Electromagnetic Compatibility (EMC) by applying the following standard(s):

- Bulletin 280/281: EN 60947-4-1 — Low-voltage switchgear and controlgear — Part 4-1:Contactors and motor-starters — Electromechanical contactors and motor-starters.
- Bulletin 284: EN 61800-3 — Adjustable speed electronic power drive systems — Part 3: EMC product standard including specific test methods.

This product is intended for use in an industrial environment.

Notes

Table of Contents

Chapter 1
Product Overview

Introduction 1-1
Description 1-1
Operation 1-2
Mode of Operation 1-2
Bulletin 280/281 — Full-Voltage Start 1-2
Bulletin 284 — Sensorless Vector Control 1-2
Description of Features 1-3
Overload Protection 1-3
LED Status Indication 1-5
Fault Diagnostics 1-5
Inputs 1-6
Outputs 1-6
Gland Plate Entrance 1-6
Motor Cable 1-6
ArmorStart with DeviceNet Network Capabilities 1-6
DeviceLogix™ 1-6
Peer to Peer Communications (ZIP) 1-6
Factory Installed Options 1-7
Optional HOA Keypad Configuration 1-7
HOA Selector Keypad with Jog Function 1-7
Source Brake Contactor 1-7
Dynamic Brake Resistor 1-8
Shielded Motor Cable 1-8

Chapter 2
Installation and Wiring

Receiving 2-1
Unpacking 2-1
Inspecting 2-1
Storing 2-1
General Precautions 2-2
Precautions for Bulletin 280/281 Applications 2-2
Precautions for Bulletin 284 Applications 2-3
Dimensions 2-4
Bulletin 280/281 2-4
Bulletin 284 2-10
Wiring 2-15
Power and Ground Wiring 2-15
Terminal Designations 2-15
Optional Locking Clip 2-18
ArmorConnect Power Media 2-19
Description 2-19
ArmorStart Safety with ArmorConnect Connectivity 2-20
Terminal Designations 2-21
ArmorConnect Cable Ratings 2-21
Branch Circuit Protection Requirements for ArmorConnect Three-Phase Power Media 2-21
Group Motor Installations for USA and Canada Markets 2-22
Wiring and Workmanship Guidelines 2-22
DeviceNet Network Installation 2-23
Other DeviceNet System Design Considerations 2-23

Electromagnetic Compatibility (EMC) 2-24
Grounding 2-24
Wiring 2-24

Chapter 3
Bulletin 280/281
Programmable Parameters

Introduction 3-1
Parameter Programming 3-1
Parameter Group Listing 3-2
DeviceLogix™ Group 3-2
DeviceNet Group 3-7
Starter Protection Group 3-10
User I/O 3-14
Misc. Group 3-17
ZIP Parameters 3-18
Starter Display 3-26
Starter Setup 3-27

Chapter 4
Bulletin 284 Programmable Parameters
for Sensorless Vector Controllers

Introduction 4-1
Parameter Programming 4-1
Parameter Group Listing 4-2
DeviceLogix™ Group 4-3
Starter Protection Group 4-12
User I/O 4-15
Drive DeviceNet Group 4-18
Display Group 4-20
Basic Program Group 4-25
Clear Type 1 Fault and Restart the Drive 4-45
Clear an Overvoltage, Undervoltage, or Heatsink OvrTmp Fault
without Restarting the Drive 4-45
Step Logic 4-58

Chapter 5
HOA Keypad Operation

Introduction 5-1
Keypad Description 5-1
Keypad Disable and HOA 5-5

Chapter 6
DeviceNet™ Commissioning

Establishing a DeviceNet Node Address 6-1
Node Commissioning using Hardware 6-1
Node Commissioning using Software 6-2
Building and Registering an EDS File 6-3
Using the Node Commissioning Tool Inside RSNetWorx for DeviceNet 6-5
System Configuration 6-6
Using Automap feature with default Input and Output (I/O) Assemblies 6-7
Default Input and Output (I/O) Assembly Formats 6-7
Setting the Motor FLA and Overload Trip Class (Bulletin 280/281)... 6-8
Setting the Motor FLA (Bulletin 284) 6-9

Chapter 7
Explicit Messaging on DeviceNet™

Logic Controller Application Example with Explicit Messaging 7-1
Programming the 1747-SLC 7-1
I/O Mapping 7-1
Explicit Messaging with SLC 7-2
Setting up the Data File 7-4
Sequence of Events 7-4
Programming the 1756-ControlLogix 7-7
I/O Mapping 7-7
Explicit Messaging with ControlLogix 7-8
Setting Up the MSG Instruction 7-8

Chapter 8
Using DeviceLogix™

DeviceLogix Programming 8-1
DeviceLogix Programming Example 8-2

Chapter 9
ArmorStart® ZIP Configuration

Overview 9-1
ZIP Parameter Overview 9-1
Data Production 9-3
Data Consumption 9-3
Mapping Consumed Data to the DeviceLogix Data Table. 9-3
Finding ZIP bits in Device Logix Editor..... 9-12

Chapter 10
Diagnostics

Overview 10-1
Protection Programming 10-1
Fault Display 10-1
Clear Fault 10-2
Fault Codes 10-2
Fault Definitions 10-3
Short Circuit 10-3
Overload Trip 10-3

Phase Loss 10-3
Phase Short 10-3
Ground Fault 10-3
Stall 10-3
Control Power 10-3
I/O Fault 10-3
Over Temperature 10-3
Phase Imbalance 10-4
Over Current 10-4
DeviceNet™ Power Loss 10-4
Internal Communication Fault 10-4
DC Bus Fault 10-4
EEPROM Fault 10-4
Hardware Fault 10-4
Restart Retries 10-4
Miscellaneous Faults 10-4

Chapter 11
Troubleshooting

Introduction 11-1
Bulletin 280/281 Troubleshooting 11-2
Bulletin 284 Troubleshooting 11-6
Fault Definitions 11-6
DeviceNet Troubleshooting Procedures 11-15
Control Module Replacement 11-16
Base Module Replacement 11-18

Appendix A
Specifications

Bulletin 280/281 Specifications A-1
Bulletin 284 Specifications A-5
ArmorConnect™ Three-Phase Power Media A-10
Trunk Cables A-10
Drop Cables A-11
Power Tees & Reducer A-12
Power Receptacles A-14

Appendix B
Bulletin 280/281 CIP Information

Electronic Data Sheets B-1
DOL Type Product Codes and Name Strings B-1
DOL Reversing Type Product Codes and Name String B-1
DeviceNet Objects B-2
Identity Object — CLASS CODE 0x0001 ..... B-3
Identity Objects B-3
Message Router — CLASS CODE 0x0002 ..... B-3
DeviceNet Object — CLASS CODE 0x0003 ..... B-4
Assembly Object — CLASS CODE 0x0004 ..... B-5
Custom Parameter Based
“Word-wise” I/O Assemblies B-5
“Word-wise” Bit-Packed Assemblies B-6
Standard Distributed Motor Controller I/O Assemblies B-7
Standard Distributed Motor Controller Output
(Consumed) Assemblies B-7

Standard Distributed Motor Controller Input (Produced) Assemblies B-8
Connection Object — CLASS CODE 0x0005 ....B-10
Discrete Input Point Object — CLASS CODE 0x0008 ....B-14
Discrete Output Point Object — CLASS CODE 0x0009 ....B-15
Discrete Output Point Object Special Requirements B-16
DOP Instances 3 and 4 Special Behavior B-16
DOP Instances 1 and 2 Special Behavior B-17
Parameter Object — CLASS CODE 0x000F B-21
Parameter Group Object — CLASS CODE 0x0010 ....B-22
Discrete Input Group Object — CLASS CODE 0x001D B-23
Discrete Output Group Object — CLASS CODE 0x001E B-24
Control Supervisor Object -CLASS CODE 0x0029 ....B-25
Acknowledge Handler Object — CLASS CODE 0x002b B-26
Overload Object — CLASS CODE 0x002c B-27
DeviceNet Interface Object -CLASS CODE 0x00B4 ....B-28

Appendix C
Bulletin 284 CIP Information

Electronic Data Sheets C-1
VFD Type Product Codes and Name Strings C-1
DeviceNet Objects C-2
Identity Object — CLASS CODE 0x0001 ....C-2
Identity Objects C-3
Message Router — CLASS CODE 0x0002 ....C-3
DeviceNet Object — CLASS CODE 0x0003 ....C-4
Assembly Object — CLASS CODE 0x0004 ....C-5
Custom Parameter Based
“Word-wise” I/O Assemblies C-6
“Word-wise” Bit-Packed Assemblies C-6
Standard Distributed Motor Controller I/O Assemblies C-8
Standard Distributed Motor Controller Output (Consumed) Assemblies C-8
Bulletin 284 Distributed Motor Controller I/O Assemblies C-9
Standard Distributed Motor Controller Ouput (Consumed) Assemblies C-9
Standard Distributed Motor Controller Input (Produced) Assemblies C-9
Inverter Type Distributed Motor Controller Input (Produced) Assemblies C-10
PowerFlex Native Assemblies C-11
Connection Object — CLASS CODE 0x0005 ....C-13
Discrete Input Point Object — CLASS CODE 0x0008 ....C-18
Discrete Output Point Object — CLASS CODE 0x0009 ....C-19
Discrete Output Point Object Special Requirements C-20
DOP Instances 3 and 4 Special Behavior C-20
DOP Instances 1, 2, 9, and 10 Special Behavior C-22
Parameter Object — CLASS CODE 0x000F C-26
Parameter Group Object — CLASS CODE 0x0010 ....C-27
Discrete Input Group Object — CLASS CODE 0x001D C-28
Discrete Output Group Object — CLASS CODE 0x001E C-29

Control Supervisor Object -CLASS CODE 0x0029 .....C-30
Acknowledge Handler Object — CLASS CODE 0x002b C-31
DeviceNet Interface Object -CLASS CODE 0x00B4 .....C-32

Appendix D
Group Motor Installations

Application of ArmorStart® Controllers in Group Installation D-1

Appendix E
Safety I/O Module and TÜV Requirements

ArmorStart Safety-Related Parts.....E-1
ArmorBlock Guard I/O Modules E-2
Specifications E-2
ArmorBlock Guard I/O Recommended Compatible Cables and Connectors.....E-3
Safety-Related Specifications.....E-6
Maintenance and Internal Part Replacement.....E-6
Troubleshooting E-7

Appendix F
Accessories

Accessories F-1

Appendix G
Renewal Parts

Renewal Parts.....G-1

Appendix H
PID Setup

Exclusive Control.....H-1
Trim Control.....H-2
PID Reference and Feedback.....H-3
PID Deadband H-3
PID Preload H-4
PID Limits H-4
PID Gains H-4
Guidelines For Adjusting PID Gains.....H-5

Appendix I
Step Logic, Basic Logic and Timer/ Counter Functions

Step Logic Using Timed Steps.....I-2
Step Logic Using Basic Logic Functions.....I-3
Timer Function.....I-4
Counter Function.....I-5
Step Logic Parameters.....I-6

Product Overview

Introduction

This chapter provides a brief overview of the features and functionality of the Bulletin 280/281 and 284 ArmorStart® Distributed Motor Controllers.

Description

The ArmorStart Distributed Motor Controllers are integrated, pre-engineered, starters with Bulletin 280/281 for full-voltage and reversing applications and Bulletin 284 for variable frequency AC drives applications. The ArmorStart offers a robust IP67/NEMA Type 4 enclosure design, which is suitable for water wash down environments.

The modular “plug and play” design offers simplicity in wiring the installation. The quick disconnects for the I/O, communications, and motor connections reduce the wiring time and eliminate wiring errors. The ArmorStart offers, as standard, four DC inputs and two relay outputs, to be used with sensors and actuators respectively, for monitoring and controlling the application process. The ArmorStart’s LED status indication and built-in diagnostics capabilities allow ease of maintenance and troubleshooting. The optional Hand/Off/Auto (HOA) keypad configuration allows local start/stop control at the ArmorStart Distributed Motor Controller.

The ArmorStart Distributed Motor Controller offers short circuit protection per UL508 and IEC 60947. The ArmorStart is rated for local-disconnect service by incorporating the Bulletin 140 Motor Protector as the local-disconnect, eliminating the need for additional components. The ArmorStart Distributed Motor Controllers are suitable for group motor installations.

Safety ArmorStart

The safety version of the ArmorStart provides a safety solution integrated into DeviceNet Safety installations. The Bulletin 280/281/284 Safety ArmorStart achieves Category 4 functionality by using redundant contactors. The Safety ArmorStart offers a quick connects via the gland plate to the 1732DS-IB8XOBV4 safety I/O module. The Bulletin 1732DS Safety I/O inputs will monitor the status of the safety rated contactors inside the ArmorStart. The Bulletin 1732DS Safety I/O outputs to provide 24V DC power for control power to the ArmorStart.

Note: The Bulletin 280/281/284 Safety ArmorStart is suitable for safety applications up to Safety Category 4PL e (TÜV assessment per ISO 13849-1:2008). TÜV compliance letter is available upon request.

Note: For additional information regarding the 1732DS-IB8XOBV4 safety I/O module, see publication 1791DS-UM001*-EN-P.

Operation

The ArmorStart Distributed Motor Controllers can operate three-phase squirrel-cage induction motors as follows:

Bulletin 280/281: 0.5…16 A; up to 10 Hp (7.5 kW) @ 480V AC; 50/60 Hz.
Bulletin 284: up to 5 Hp (3.0 kW) @ 480V AC; 50/60 Hz.

Mode of Operation

Bulletin 280/281 Full-Voltage Start

This method is used in applications requiring across-the-line starting, in which full inrush current and locked-rotor torque are realized. The ArmorStart Bulletin 280 offers full-voltage starting and the Bulletin 281 offers full-voltage starting for reversing applications.

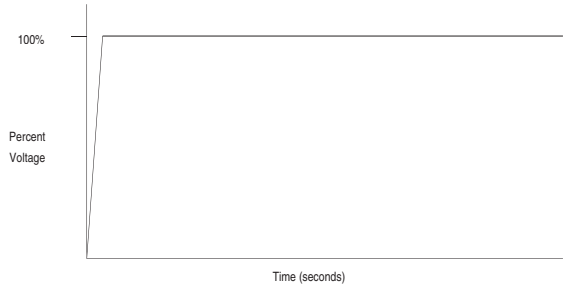

Bulletin 284 Sensorless Vector Control

- Sensorless Vector Control provides exceptional speed regulation and very high levels of torque across the entire speed range of the drive
- The Autotune feature allows the Bulletin 284 ArmorStart Distributed Motor Controller to adapt to individual motor characteristics.
- To select this method of operation, select **V** for the **Mode of Operation** listed in the catalog structure. See the Industrial Controls catalog

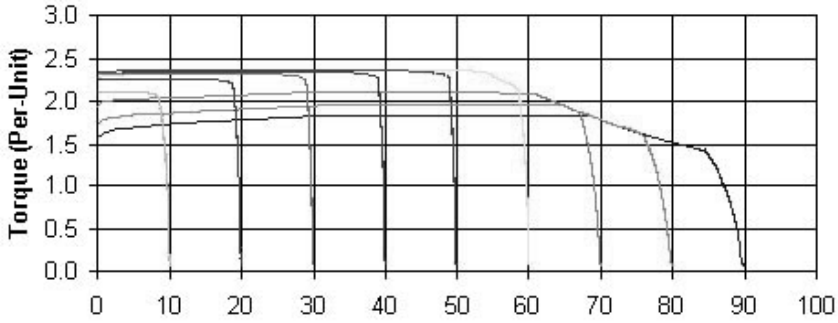

Description of Features

Overload Protection

The ArmorStart Distributed Motor Controller incorporates, as standard, electronic motor overload protection. This overload protection is accomplished electronically with an I^2t algorithm. The ArmorStart's overload protection is programmable via the communication network, providing the user with flexibility.

The Bulletin 280/281 overload trip class can be selected for class 10, 15, 20 protection. Ambient insensitivity is inherent in the electronic design of the overload.

Figure 1.1 Overload Trip Curves

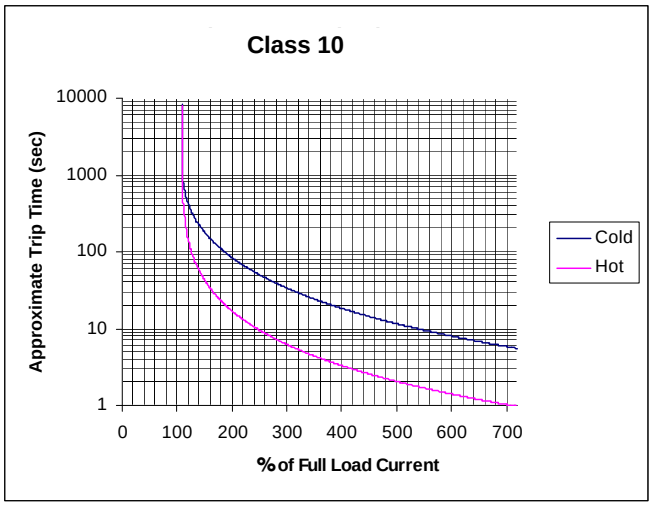

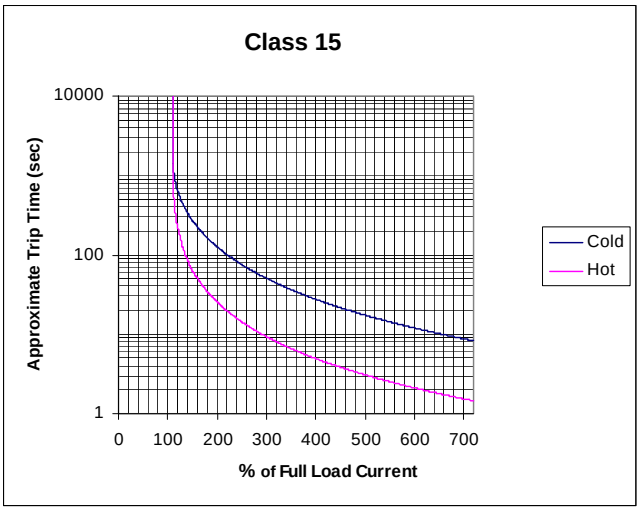

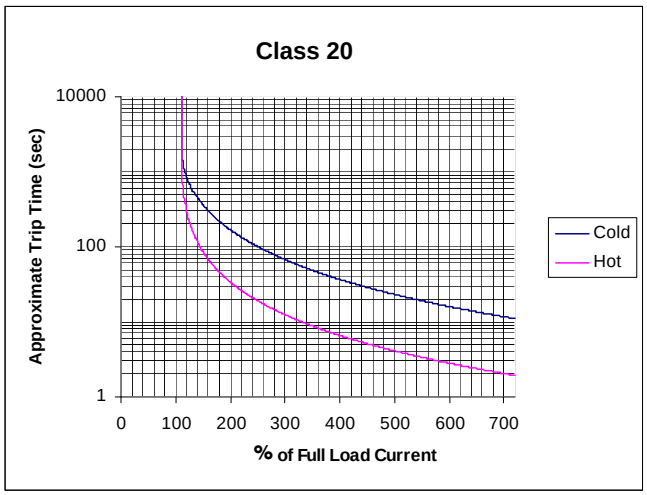

The Bulletin 284 ArmorStart Distributed Motor Controller incorporates, as standard, electronic motor overload protection. This overload protection is accomplished electronically with an I^2t algorithm. The ArmorStart's overload protection is programmable via the communication network providing the user with flexibility. Programming the Motor OL Current parameter provides class 10 overload protection for the Bulletin 284 Distributed Motor Controller. Ambient insensitivity is inherent in the electronic design of the overload.

Figure 1.2 Overload Trip Curves

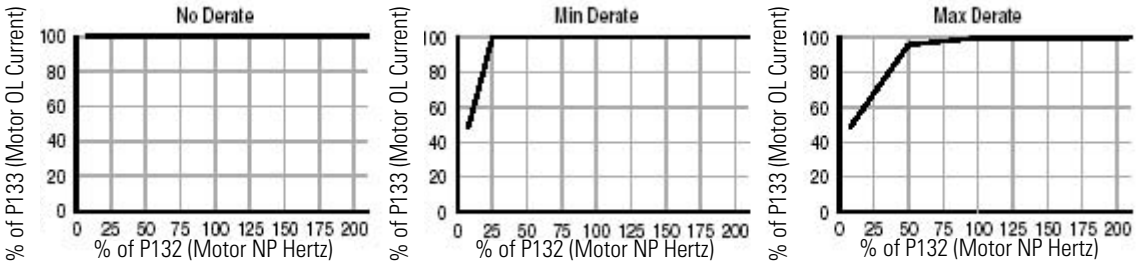

LED Status Indication

The LED Status Indication provides 4 status LEDs and a Reset button. The LEDs provide status indication for the following:

- POWER LED
  The LED is illuminated solid green when control power is present and with the proper polarity
- RUN LED
  This LED is illuminated solid green when a start command and control power are present
- NETWORK LED
  This bi-color (red/green) LED indicates the status of the communication link
- FAULT LED
  Indicates Controller Fault (Trip) condition

The "**Reset Button**" acts as a local trip reset.

Figure 1.3 Status Indication and Reset

Fault Diagnostics

Fault diagnostics capabilities built in the ArmorStart Distributed Motor Controller help you pinpoint a problem for easy troubleshooting and quick re-starting.

Fault Indication	Available on Bulletin:		Fault Indication	Available on Bulletin:	
	280/281	284		280/281	284
• Short Circuit	X	X	• Phase Imbalance	X	
• Overload	X	X	• Miscellaneous Fault	X	X
• Phase Loss	X	X	• Brake Fuse Detection		X
• Control Power Loss	X	X	• Internal Comm. Fault		X
• Control Power Fuse Detection	X	X	• DC Bus Fault		X
• Output Power Fuse Detection	X	X	• Ground Fault		X
• I/O Fault	X	X	• Overcurrent		X
• Over Temperature	X	X	• Restart Retries		X
• DeviceNet™ Power Loss	X	X	• Stall		X
• EEprom Fault	X	X	• Phase Short		X
• Hardware Fault	X	X			

Inputs

The inputs are single-keyed (2 inputs per connector), which are sourced from DeviceNet power (24V DC), with LED status indication.

Outputs

Two dual-key relay output connectors are supplied as standard. The outputs are sourced from control power (A1 and A2). LED status indication is also provided as standard for each output.

Gland Plate Entrance

The ArmorStart product offers two different methods of connecting incoming three-phase power to the device. One method offered is the traditional conduit entrance with a 1 in. conduit hole opening for wiring three-phase power. The second method offers connectivity to the ArmorConnect™ power media. Factory-installed receptacles are provided for connectivity to the three-phase power media.

Motor Cable

With every ArmorStart Distributed Motor Controller, a 3-meter unshielded 4-conductor cordset is provided with each unit as standard. If the optional EMI filter is selected for Bulletin 284 units, a shielded 4-conductor cordset is provided with each unit as standard.

ArmorStart with DeviceNet Network Capabilities

The ArmorStart Distributed Motor Controller delivers advanced capabilities to access parameter settings and provides fault diagnostics, and remote start-stop control. DeviceNet is the communication protocol, provided with the ArmorStart Bulletin 280D/281D or 284D Distributed Motor Controller.

DeviceLogix™

DeviceLogix is a stand-alone Boolean program that resides within the ArmorStart Distributed Motor Controller. DeviceLogix is programmed using Boolean math operations, such as, AND, OR, NOT, Timers, Counters, and Latches. DeviceLogix can run as a stand-alone application, independent of the network. However, 24V DC must be supplied at the DeviceNet connector to power the inputs.

Peer to Peer Communications (ZIP)

The zone control capabilities of ArmorStart Distributed Motor Controllers is ideal for large horsepower (0.5…10 Hp) motored conveyors. The ArmorStart Distributed Motor Controllers have built-in DeviceNet communications, DeviceLogix technology, and the added Zone Interlocking Parameters (ZIP) which allow one ArmorStart to receive data directly, from up to four other DeviceNet nodes, without going through a network scanner. These direct communications between conveyor zones are beneficial in a merge, diverter, or accumulation conveyor application.

Factory Installed Options

Optional HOA Keypad Configuration (Bulletin 280/281 only)

The ArmorStart offers two optional factory-installed Hand/Off/Auto (HOA) configurations: Standard and Forward/Reverse HOA.

Figure 1.4 Optional HOA Configuration

Optional HOA Selector Keypad with Jog Function (Bulletin 284 only)

The HOA Selector Keypad with Jog Function allows for local start/stop control with capabilities to jog in forward/reverse motor directions.

Figure 1.5 Optional HOA with Jog Function Configuration

Source Brake Contactor (Bulletins 284 only)

An internal contactor is used to switch the electromechanical motor brake on/off. The motor brake is powered from the main power circuit. A customer-accessible 3.0 A fuse is provided to protect the brake cable. A 3 meter, 3-pin cable for connection to the motor brake is provided as standard when the option is selected.

EMI Filter (Bulletin 284 only)

The EMI Filter option is required if the Bulletin 284 ArmorStart Distributed Motor Controller must be CE-compliant. If the EMI Filter is selected, a 3 meter shielded 4-conductor cordset is provided as standard. This option is only available with sensorless vector control.

Dynamic Brake Resistor (Bulletin 284 only)

The IP67 Dynamic Brake Resistor plug and play design offers simplicity in writing and installation. The factory installed option of DB1 must be selected in order to have the quick disconnect connectivity. The cable length of the IP67 Dynamic Brake Resistor is available in two lengths, 0.5 meter and 1 meter. See Appendix F, *Accessories*, for available IP67 Dynamic Brake Resistors.

Note: The IP67 Dynamic Brake Resistor is used only with the **-DB1** factory-installed option.

Shielded Motor Cable (Bulletin 284 only)

A 3 meter shielded 4-conductor cordset is provided instead of the 3 meter unshielded 4-conductor cordset. If the EMI Filter is selected, a 3 meter shielded 4-conductor cordset is provided as standard.

Installation and Wiring

Receiving

It is the responsibility of the user to thoroughly inspect the equipment before accepting the shipment from the freight company. Check the item(s) received against the purchase order. If any items are damaged, it is the responsibility of the user not to accept delivery until the freight agent has noted the damage on the freight bill. Should any concealed damage be found during unpacking, it is again the responsibility of the user to notify the freight agent. The shipping container must be left intact and the freight agent should be requested to make a visual inspection of the equipment.

Unpacking

Remove all packing material, wedges, or braces from within and around the starter. Remove all packing material from device(s).

Inspecting

After unpacking, check the nameplate catalog number(s) against the purchase order.

Storing

The controller should remain in its shipping container prior to installation. If the equipment is not to be used for a period of time, it must be stored according to the following instructions in order to maintain warranty coverage.

- Store in a clean, dry location.
- Store within an ambient temperature range of –25°C…+85°C (–13°F…+185°F).
- Store within a relative humidity range of 0…95%, noncondensing.
- Do not store equipment where it could be exposed to a corrosive atmosphere.
- Do not store equipment in a construction area.

General Precautions

In addition to the precautions listed throughout this manual, the following statements, which are general to the system, must be read and understood.

ATTENTION

The controller contains ESD (electrostatic discharge)-sensitive parts and assemblies. Static control precautions are required when installing, testing, servicing, or repairing the assembly. Component damage may result if ESD control procedures are not followed. If you are not familiar with static control procedures, refer to Publication 8000-4.5.2, *Guarding against Electrostatic Discharge*, or any other applicable ESD protection handbooks.

ATTENTION

An incorrectly applied or installed controller can damage components or reduce product life. Wiring or application errors, such as undersizing the motor, incorrect or inadequate AC supply, or excessive ambient temperatures, may result in malfunction of the system.

ATTENTION

Only personnel familiar with the controller and associated machinery should plan or implement the installation, startup, and subsequent maintenance of the system. Failure to do this may result in personal injury and/or equipment damage.

Precautions for Bulletin 280/281 Applications

ATTENTION

To prevent electrical shock, open disconnect prior to connecting and disconnecting cables. Risk of shock - environment rating may not be maintained with open receptacles.

Precautions for Bulletin 284 Applications

ATTENTION

The drive contains high voltage capacitors which take time to discharge after removal of mains supply. Before working on drive, ensure isolation of mains supply from line inputs (R, S, T [L1, L2, L3]). Wait three minutes for capacitors to discharge to safe voltage levels. Failure to do so may result in personal injury or death. Darkened display LEDs are not an indication that capacitors have discharged to safe voltage levels. Risk of shock - environment rating may not be maintained with open receptacles.

ATTENTION

Only qualified personnel familiar with adjustable frequency AC drives and associated machinery should plan or implement the installation, startup, and subsequent maintenance of the system. Failure to do this may result in personal injury and/or equipment damage.

Dimensions

Dimensions are shown in millimeters (inches). Dimensions are not intended to be used for manufacturing purposes. All dimensions are subject to change.

Figure 3 Dimensions for Bulletin 280D Safety Product, IP67/NEMA Type 4 with Conduit Entrance

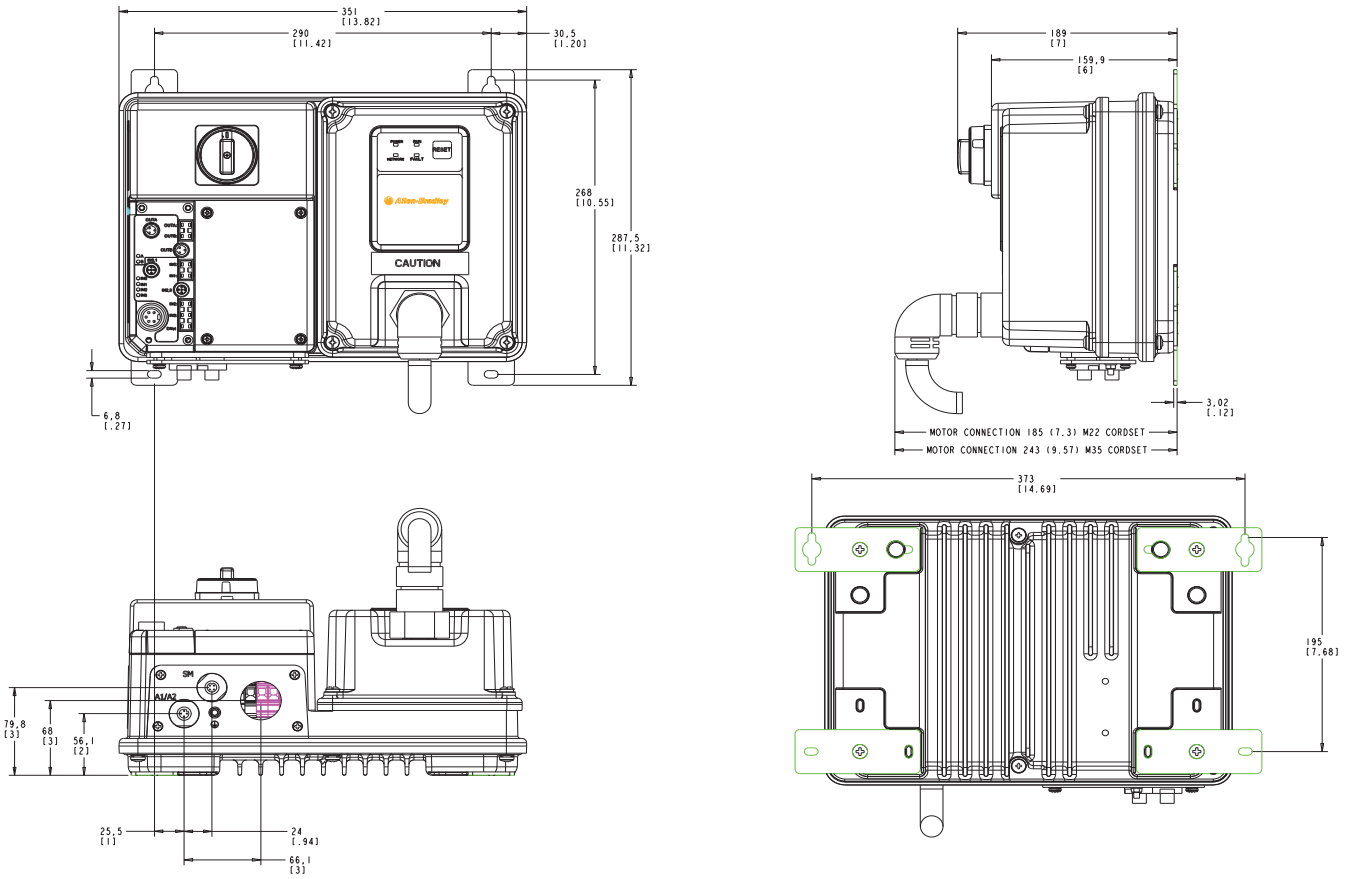

Dimensions are shown in millimeters (inches). Dimensions are not intended to be used for manufacturing purposes. All dimensions are subject to change.

Figure 4 Dimensions for Bulletin 280D Safety Product, IP67/NEMA Type 4 with ArmorConnect™ Connectivity

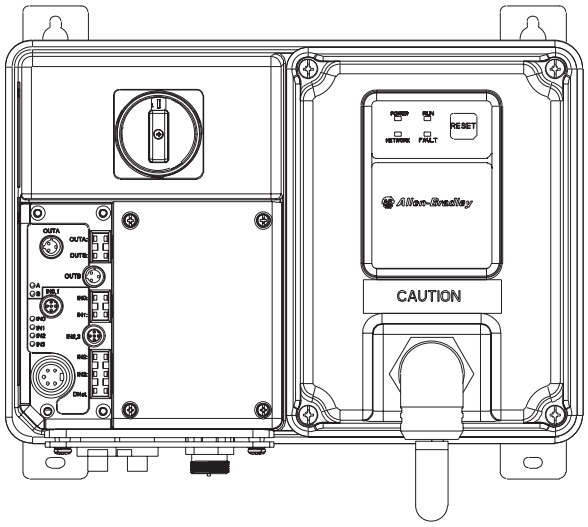

ArmorStart device with a 10 A short circuit protection rating

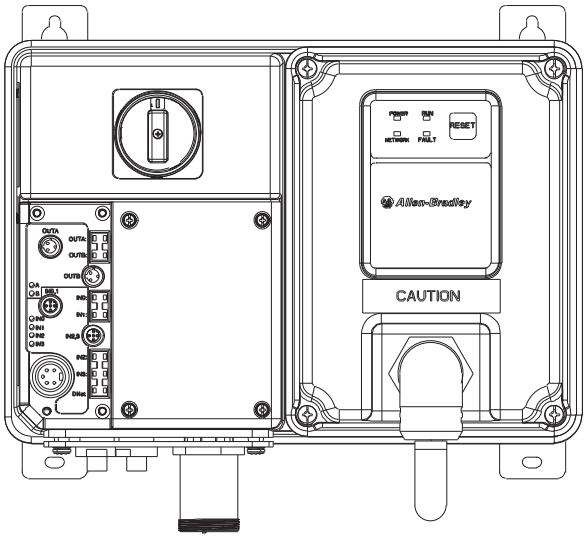

ArmorStart device with a 25 A short circuit protection rating

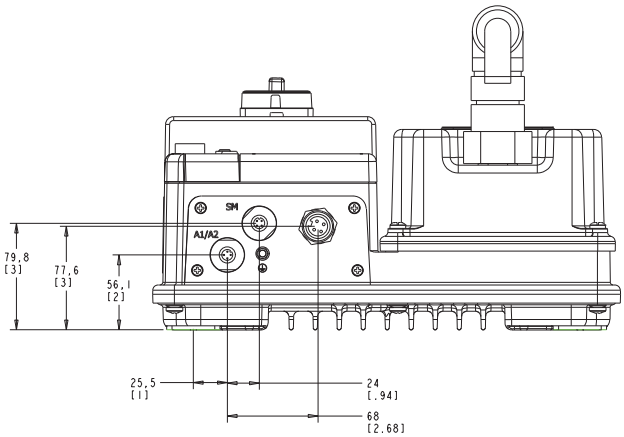

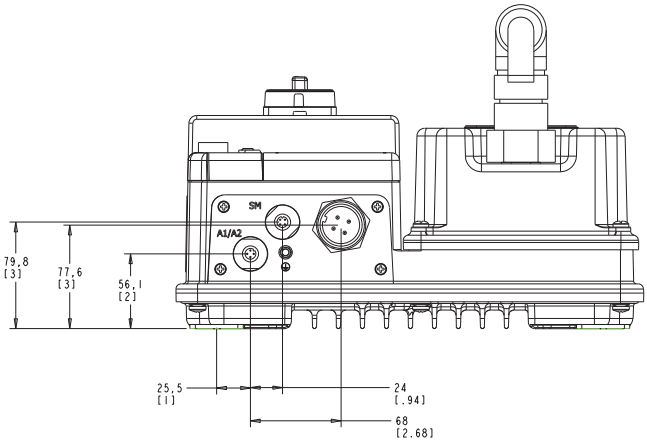

Dimensions are shown in millimeters (inches). Dimensions are not intended to be used for manufacturing purposes. All dimensions are subject to change.

Figure 5 Dimensions for Bulletin 281D Safety Product, IP67/NEMA Type 4 with Conduit Entrance

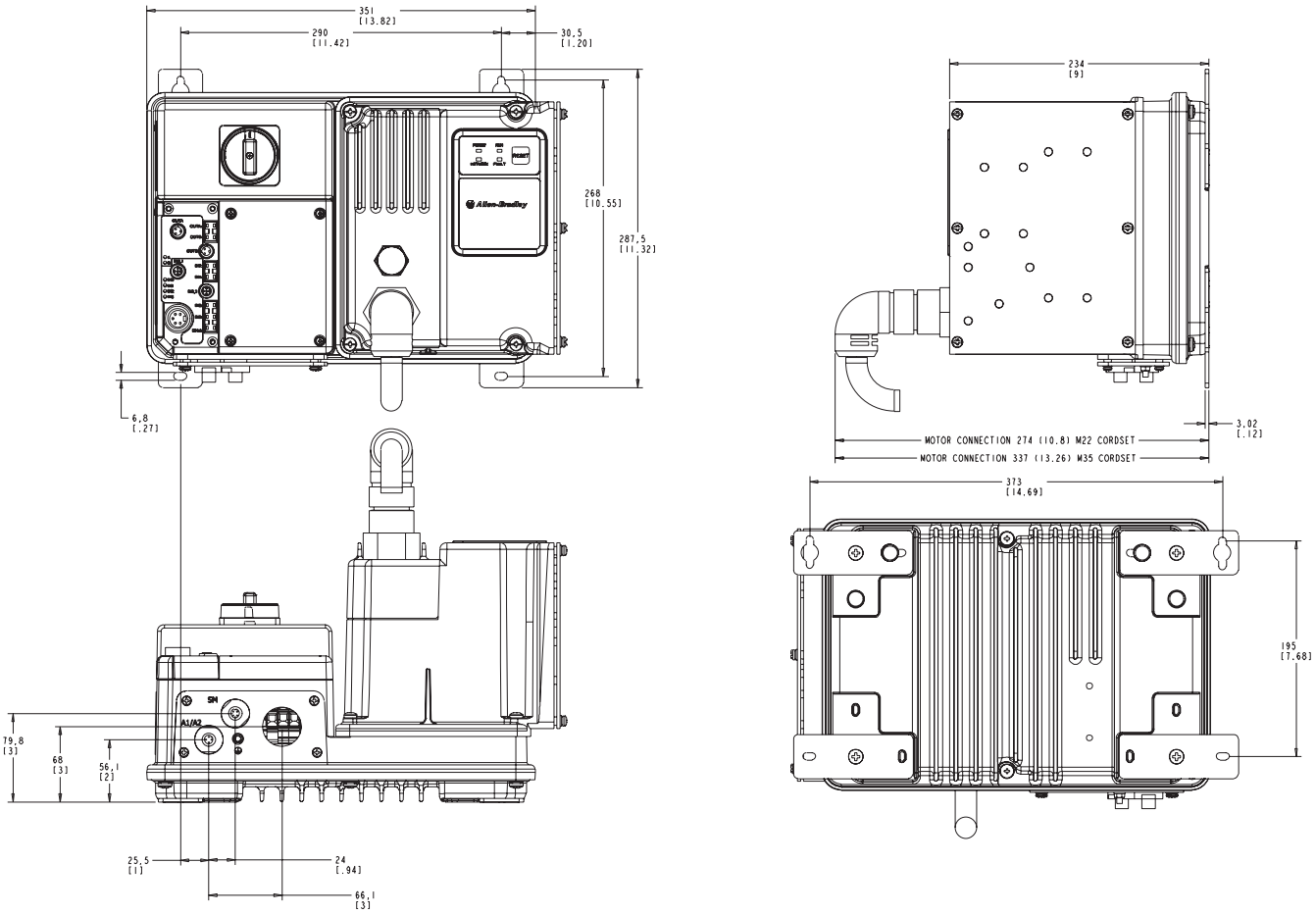

Dimensions are shown in millimeters (inches). Dimensions are not intended to be used for manufacturing purposes. All dimensions are subject to change.

Figure 6 Dimensions for Bulletin 281D Safety Product, IP67/NEMA Type 4 with ArmorConnect Connectivity

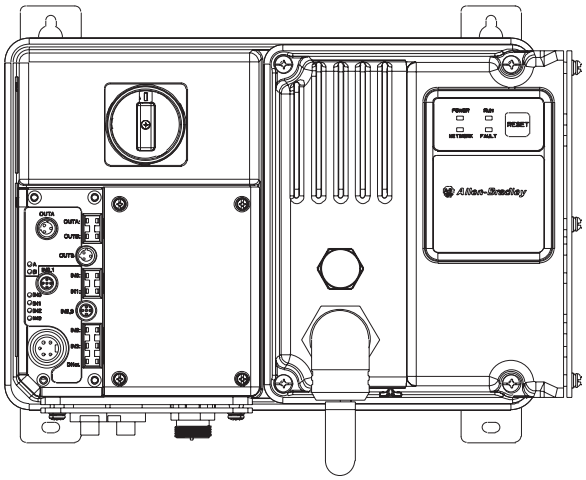

ArmorStart device with a 10 A short circuit protection rating

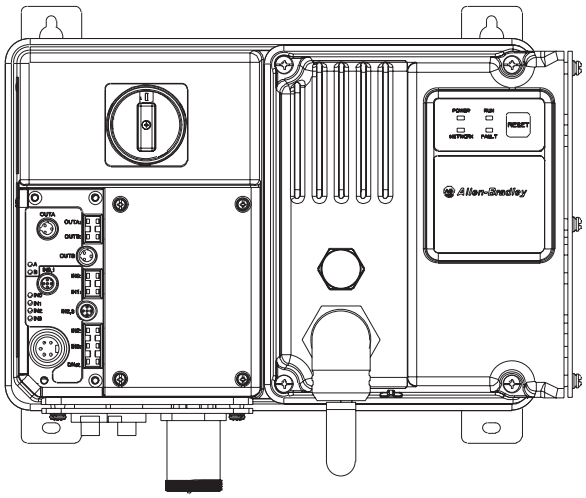

ArmorStart device with a 25 A short circuit protection rating

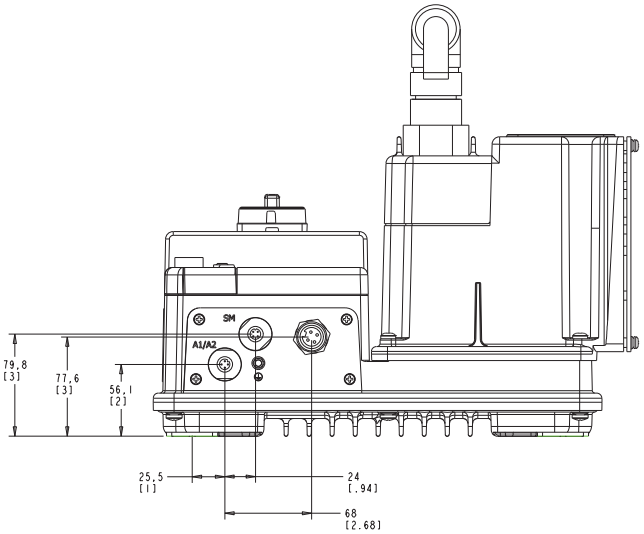

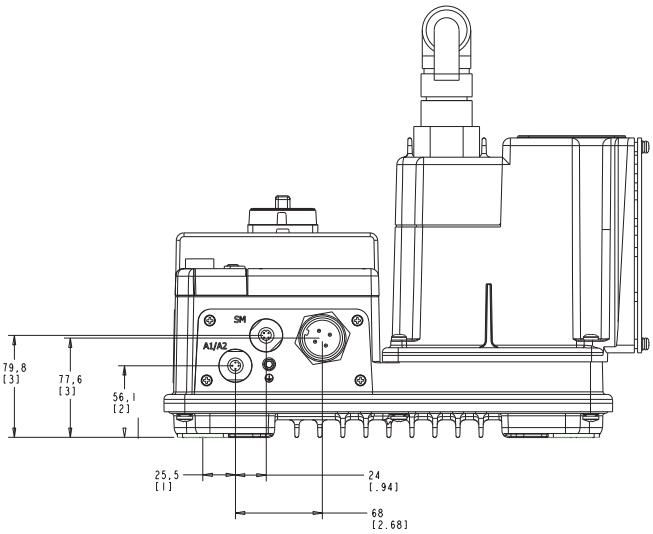

Figure 7 Bulletin 280D ArmorStart Safety Product with Conduit Entrance

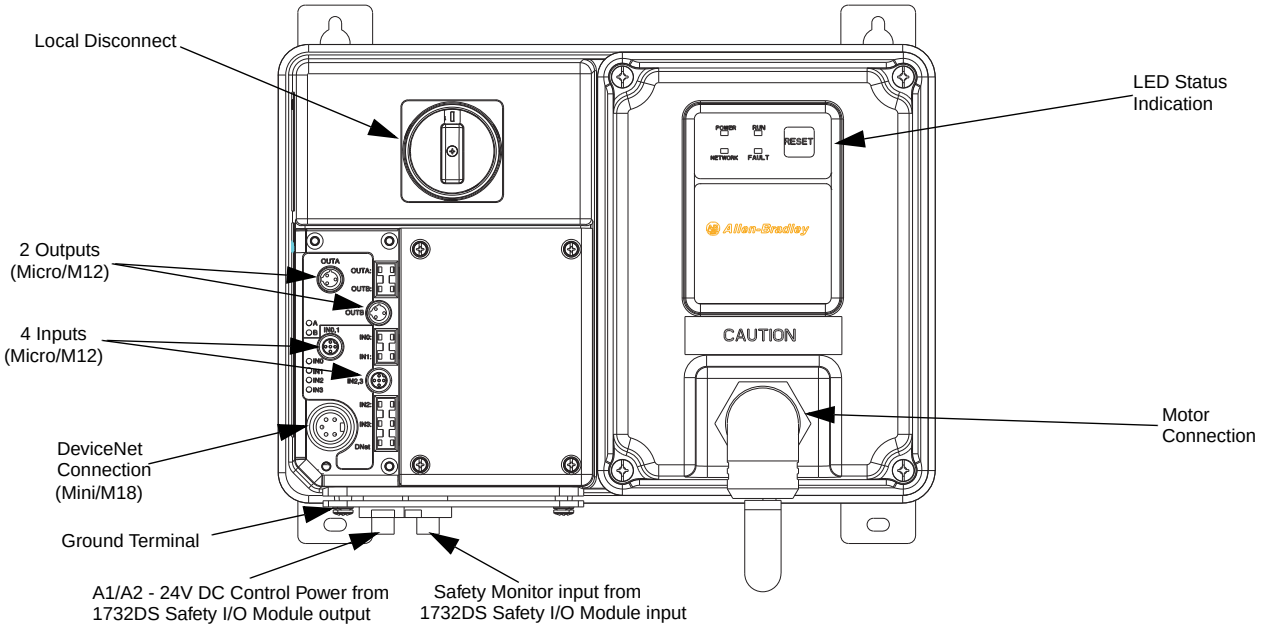

Figure 8 Bulletin 281D ArmorStart Safety Product with Conduit Entrance

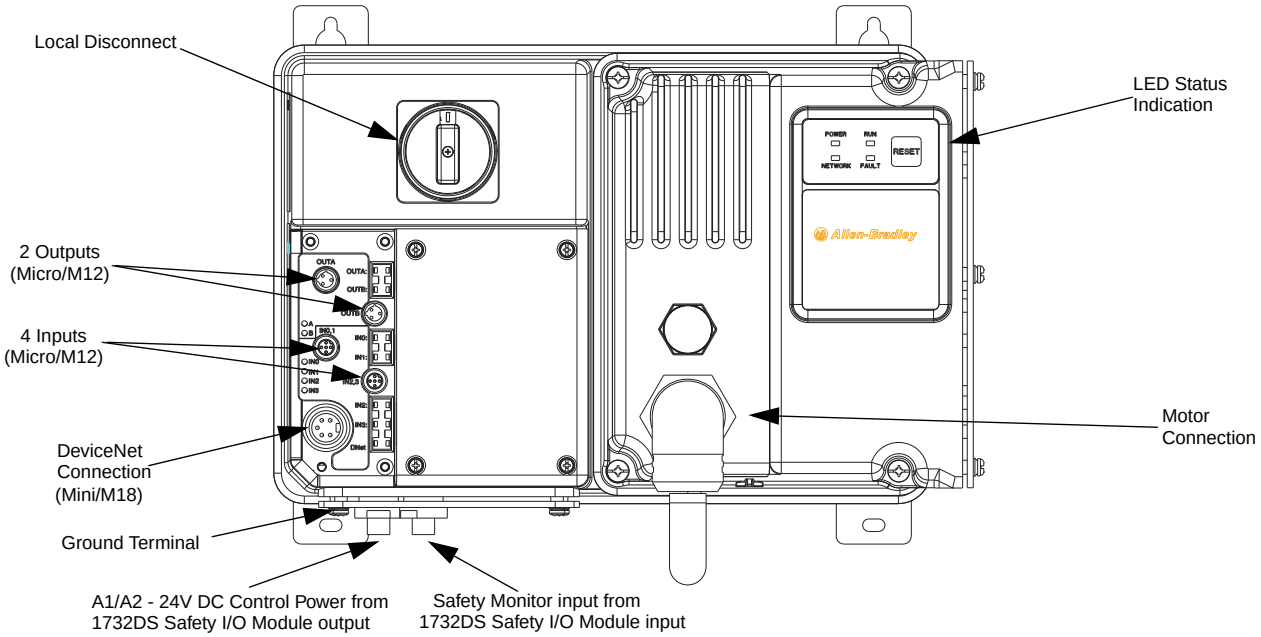

Figure 9 Bulletin 280D ArmorStart Safety Product with ArmorConnect

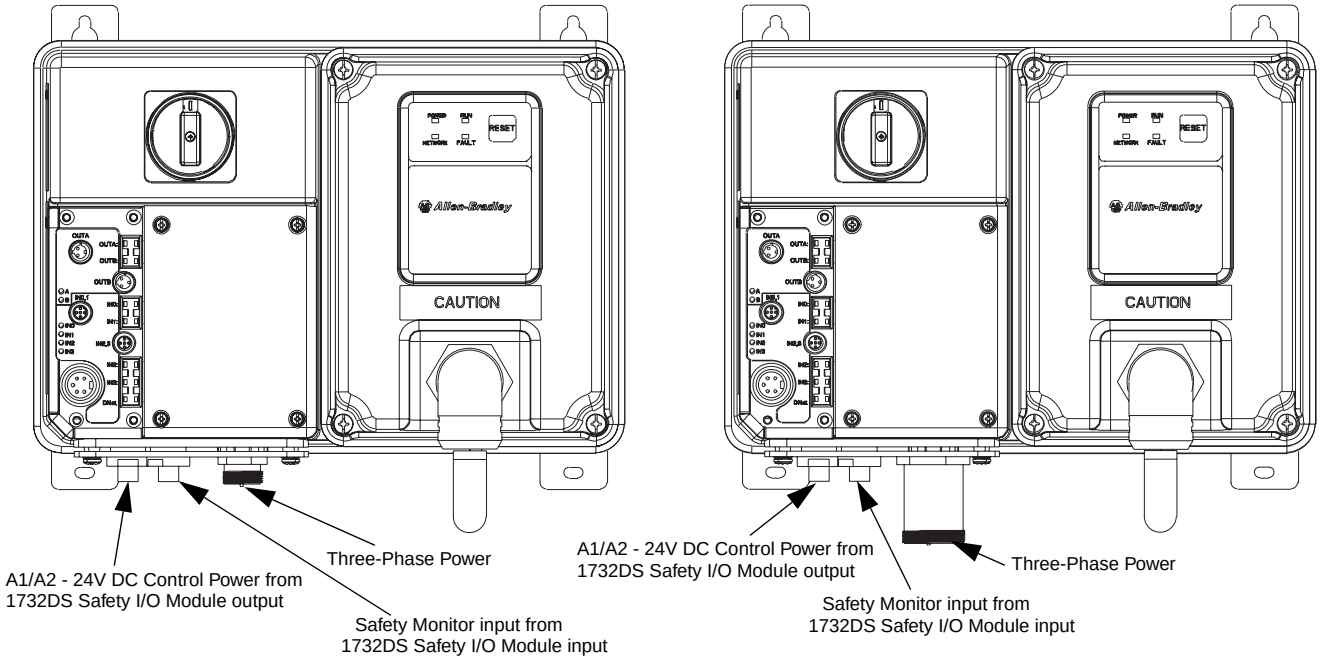

Figure 10 Bulletin 281D ArmorStart Safety Product with ArmorConnect

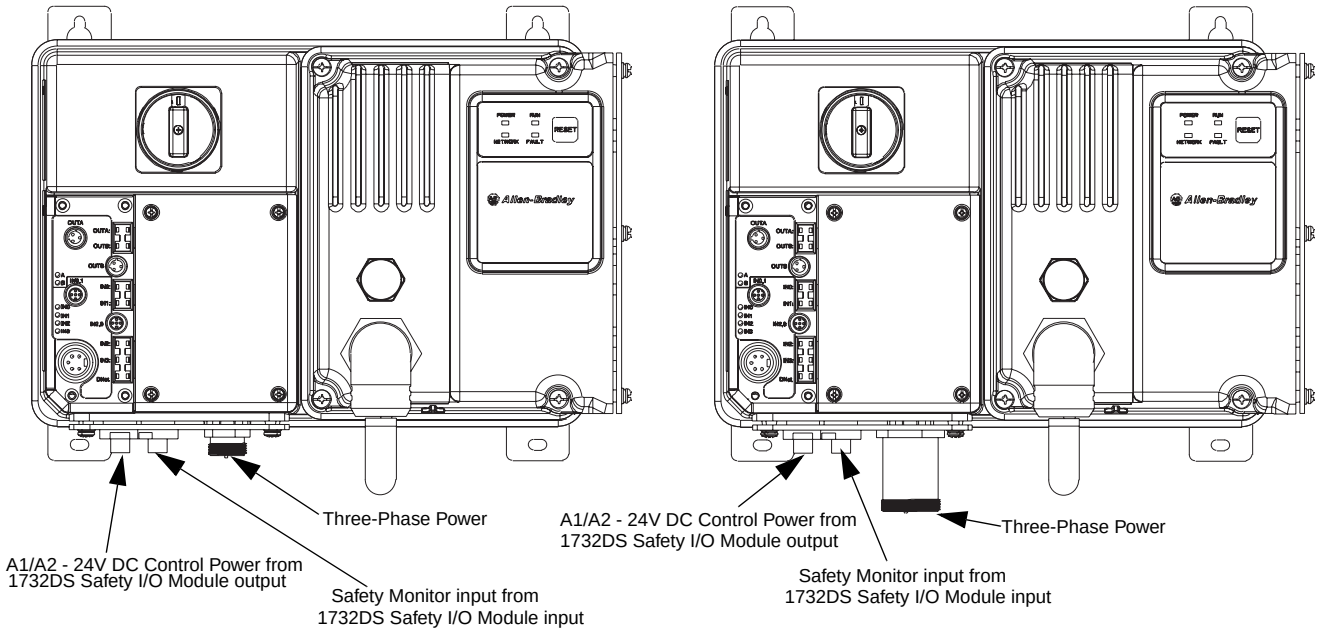

Dimensions

Dimensions are shown in millimeters (inches). Dimensions are not intended to be used for manufacturing purposes. All dimensions are subject to change.

Figure 11 Dimensions for Bulletin 284D Safety Product, 2 Hp and below @ 460V AC, IP67/NEMA Type 4 with Conduit Entrance

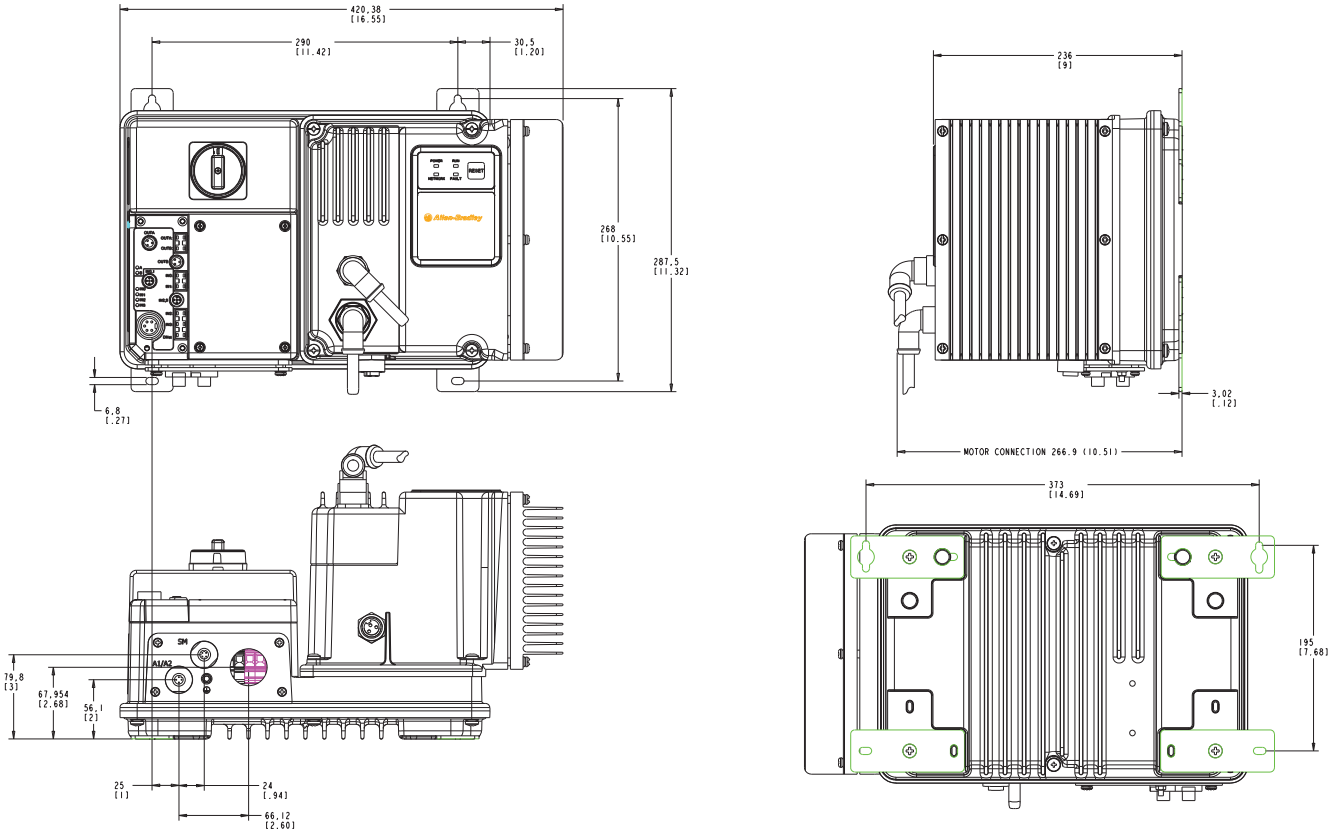

Dimensions are shown in millimeters (inches). Dimensions are not intended to be used for manufacturing purposes. All dimensions are subject to change.

Figure 12 Dimensions for Bulletin 284D Safety Product, 2 Hp and below @ 460V AC, NEMA Type 4 with ArmorConnect™ Connectivity

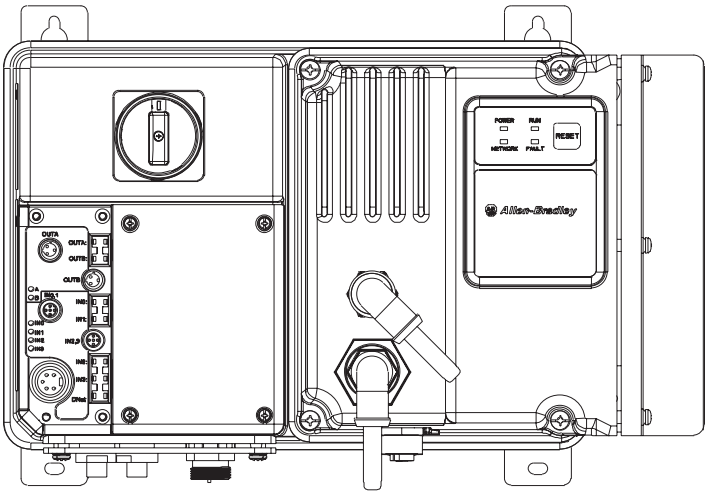

ArmorStart device with a 10 A short circuit protection rating

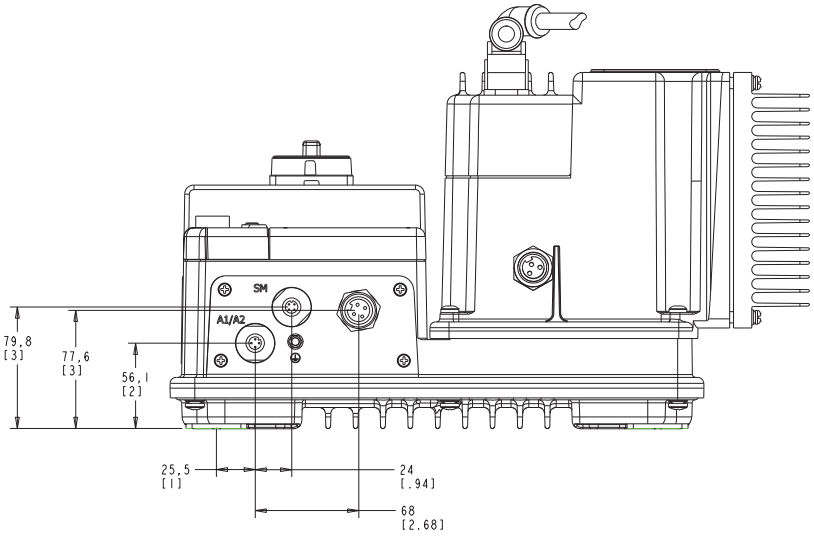

Dimensions are shown in millimeters (inches). Dimensions are not intended to be used for manufacturing purposes. All dimensions are subject to change.

Figure 13 Dimensions for Bulletin 284D Safety Product, 3 Hp and above @ 460V AC, IP67/NEMA Type 4 with Conduit Entrance

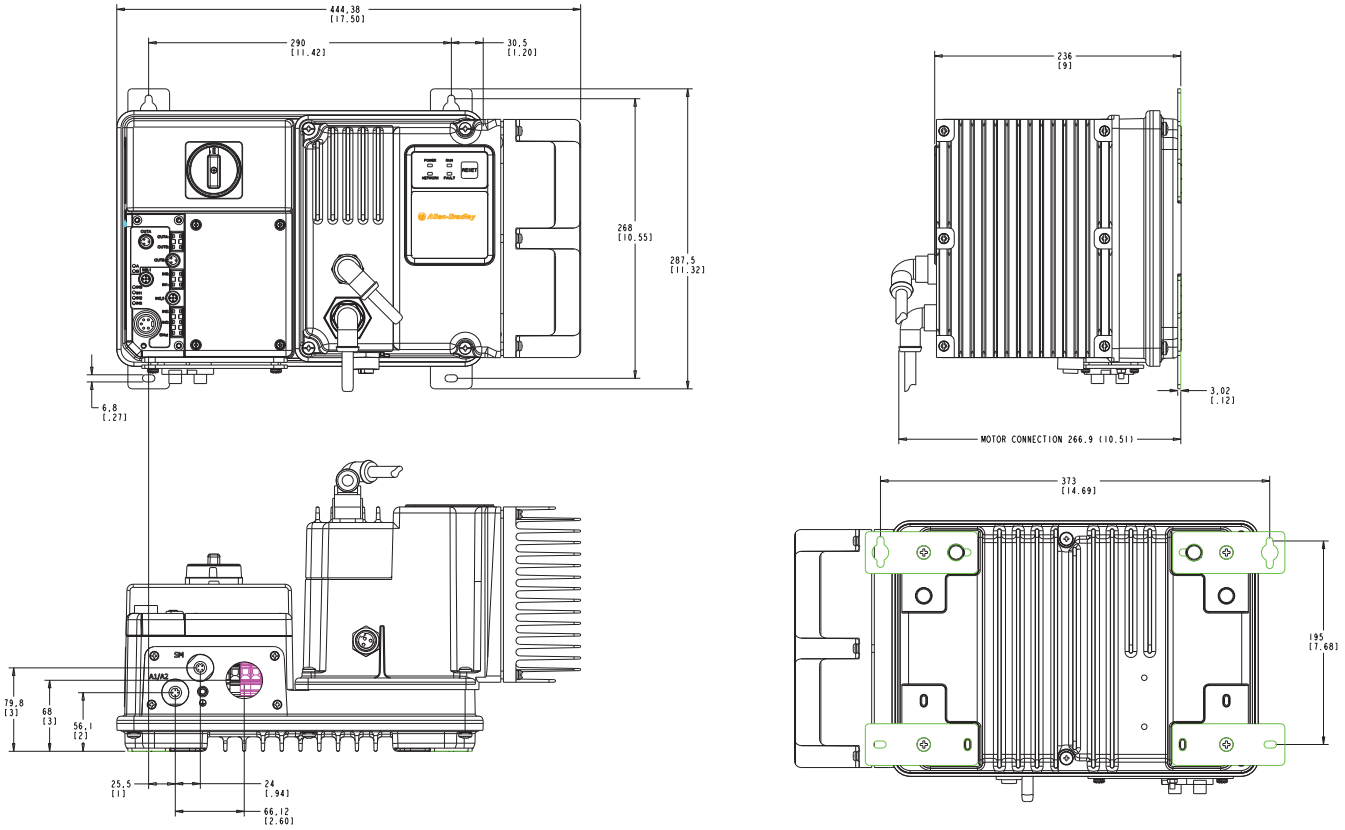

Dimensions are shown in millimeters (inches). Dimensions are not intended to be used for manufacturing purposes. All dimensions are subject to change.

Figure 14 Dimensions for Bulletin 284D Safety Product, 3 Hp and above @ 460V AC, IP67/NEMA Type 4 with ArmorConnect Connectivity

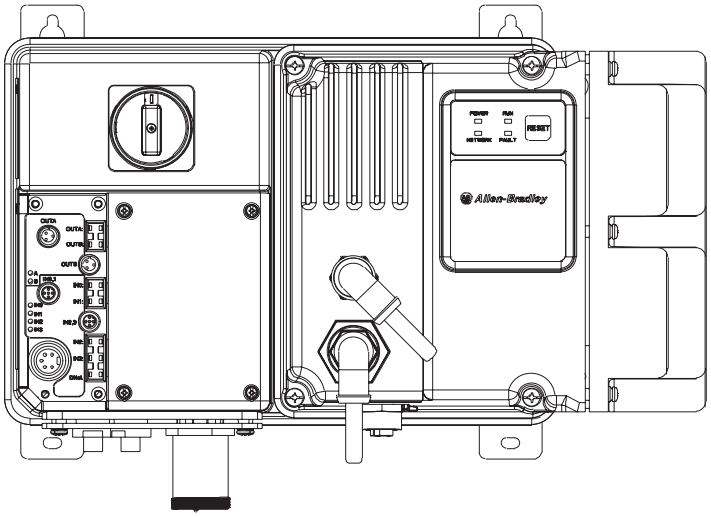

ArmorStart device with a 25 A short circuit protection rating

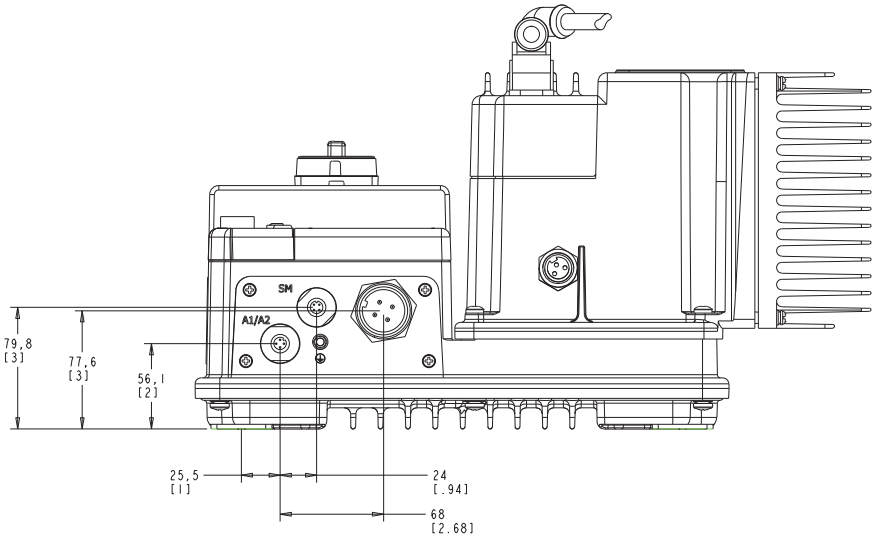

Figure 15 Bulletin 284 ArmorStart Safety Product with Conduit Entrance

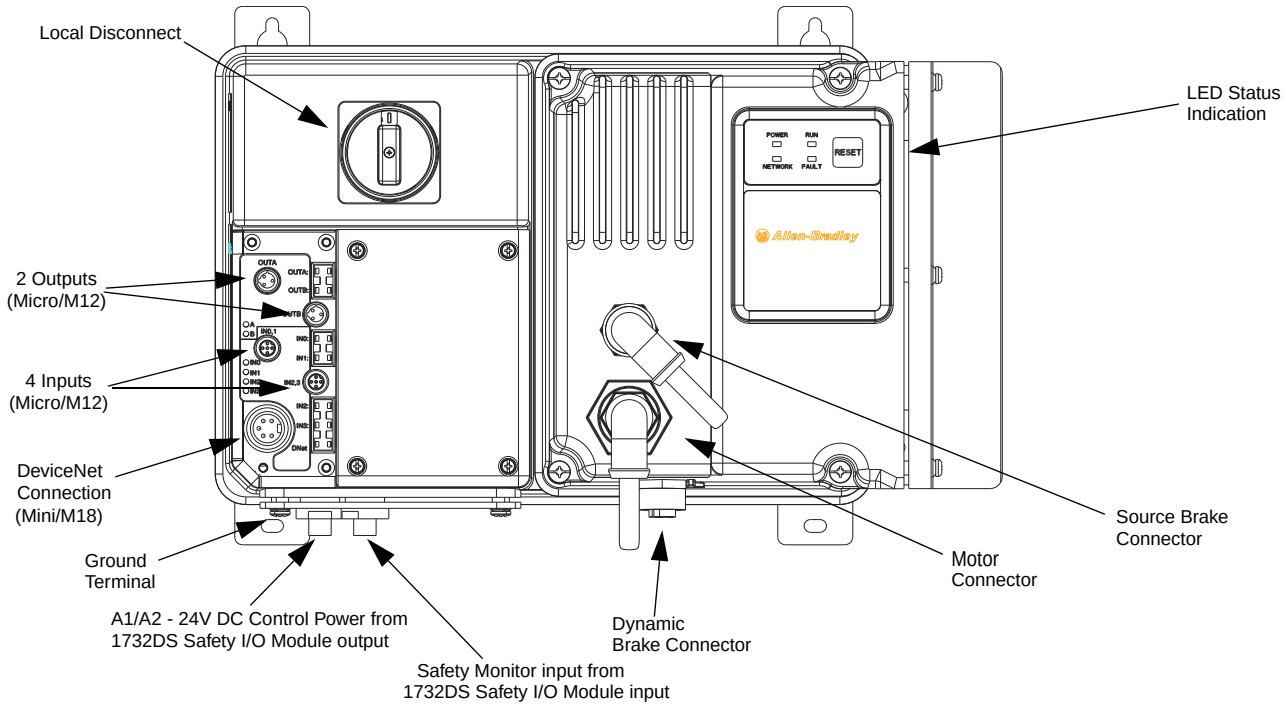

Figure 16 Bulletin 284 ArmorStart Safety Product with ArmorConnect

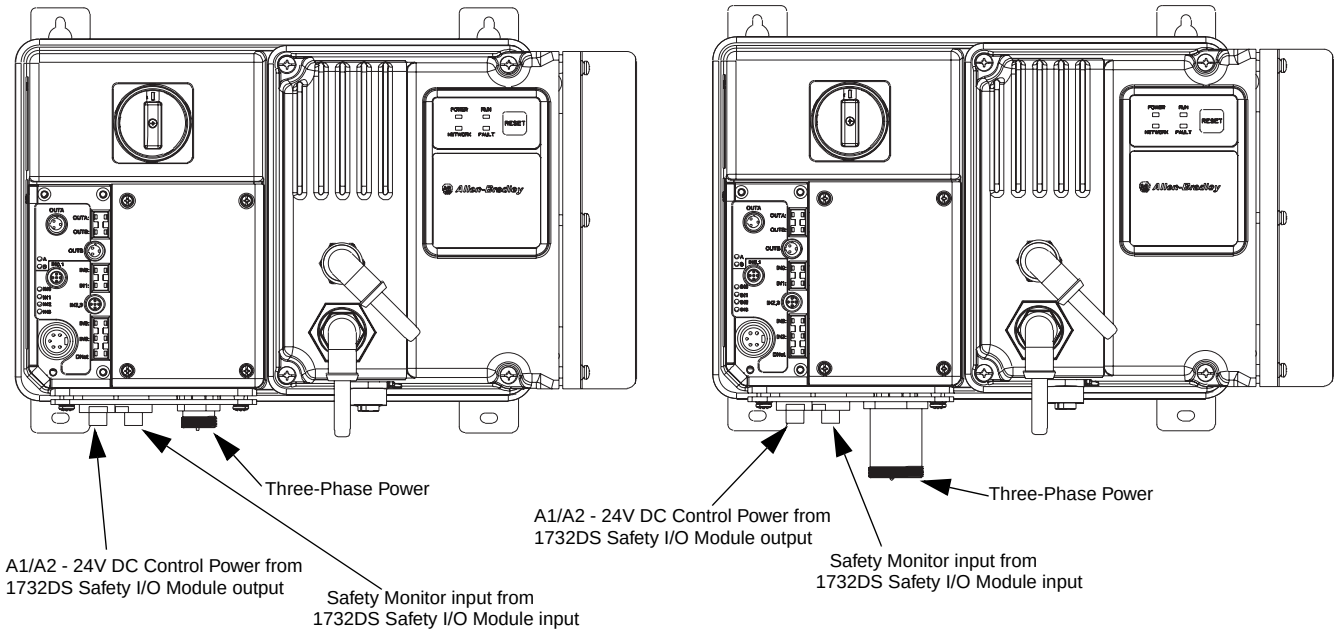

Wiring

Power and Ground Wiring

Table 2.1 provides the power and ground wire capacity and the tightening torque requirements. The power and ground terminals will accept a maximum of two wires per terminal.

Table 2.1 Power and Ground Wire, Size and Torque Specifications

Terminals	Wire Size	Torque	Wire Strip Length
Power and Ground	**Primary Terminal:** 1.3…5.3 mm^2 (#16 …#10 AWG) **Secondary Terminal:** 0.8…5.3 mm^2 (#18 …#10 AWG)	**Primary Terminal:** 10.8 lb•in (1.2 N•m) **Secondary Terminal:** 4.5 lb•in (0.5 N•m)	0.35 in. (9 mm)

Terminal Designations

As shown in the next figures, the ArmorStart Distributed Motor Controller contains terminals for power, control, safety monitor inputs, and ground wiring. Access can be gained by removing the terminal access cover plate.

Figure 2.1 Bulletin 280 Power, Control, and Safety Monitor Input Terminals

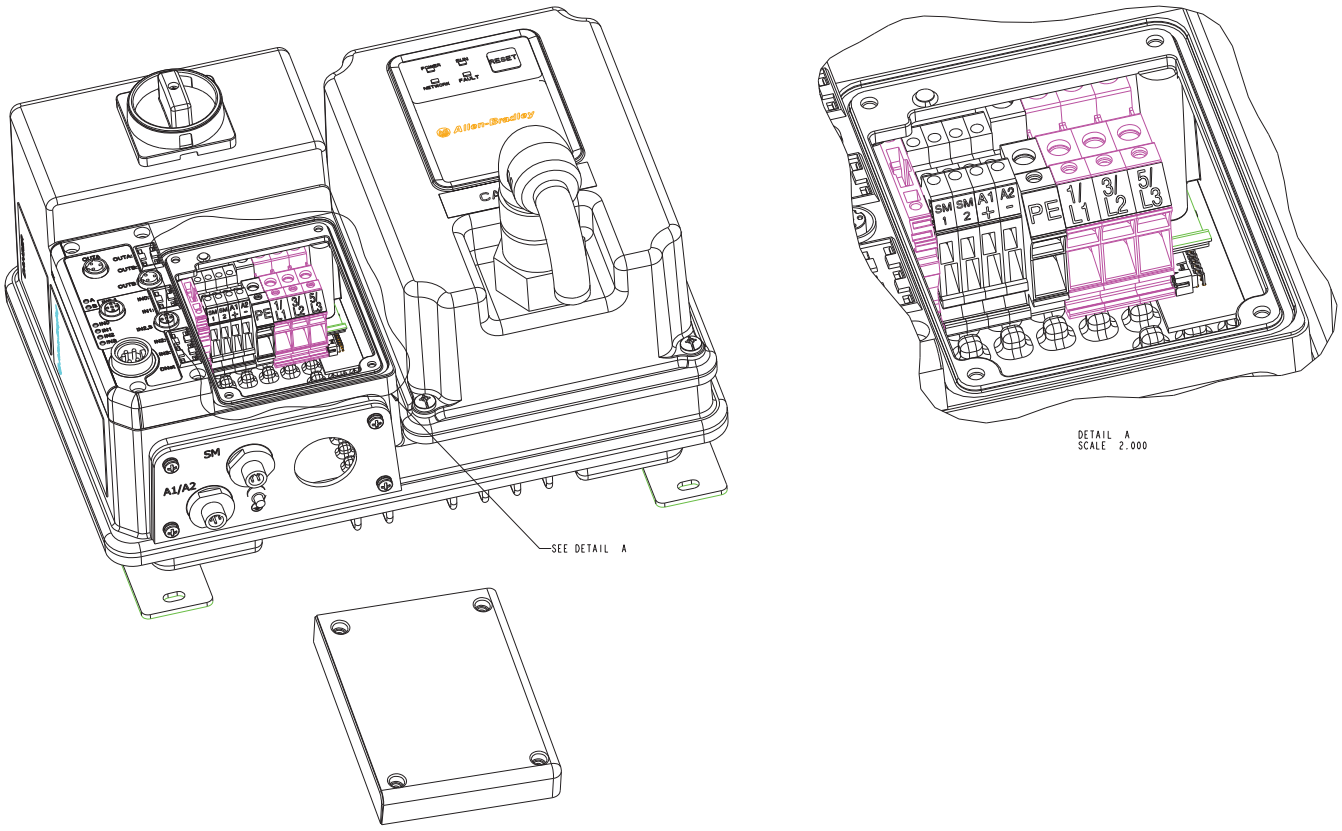

Figure 2.2 Bulletin 281 Power, Control, and Safety Monitor Input Terminals

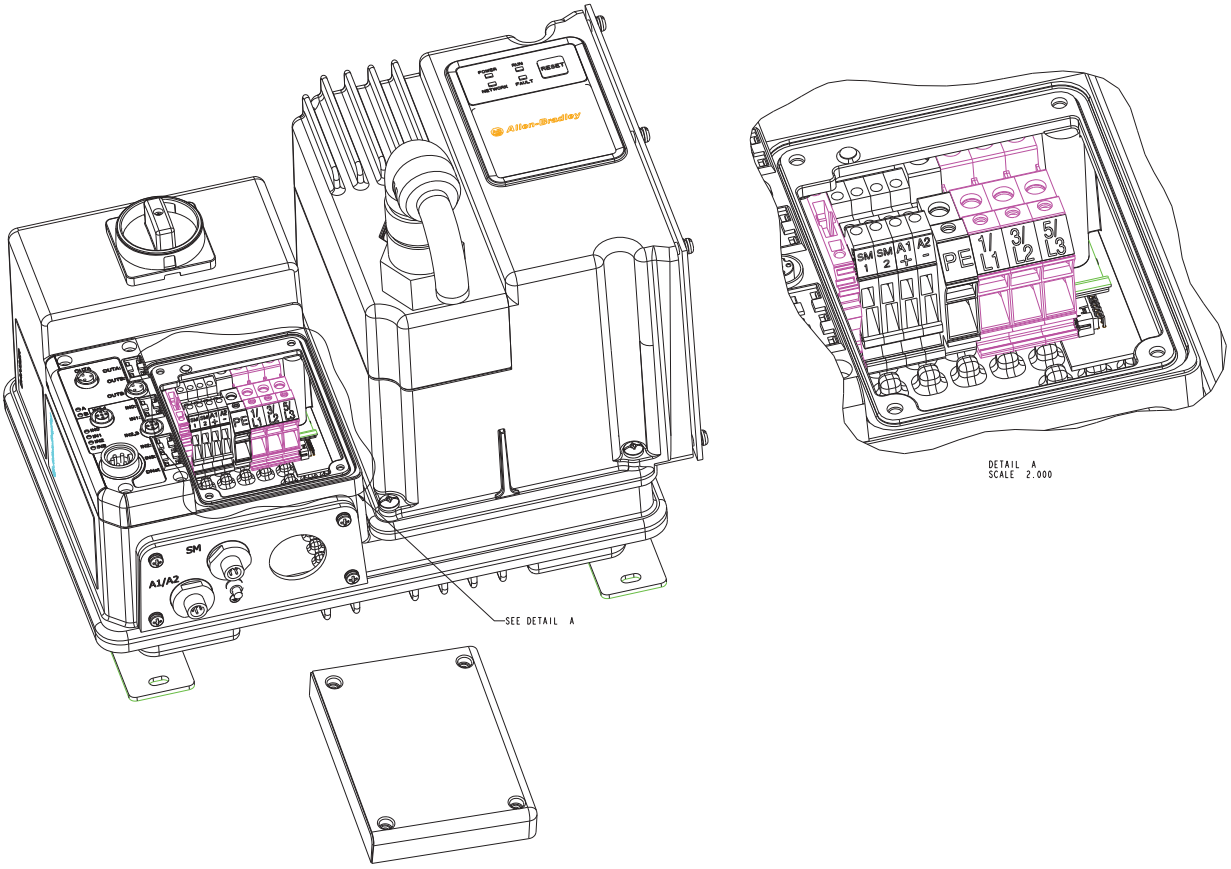

Figure 2.3 Bulletin 284 ArmorStart Power, Control, and Safety Monitor Input Terminals

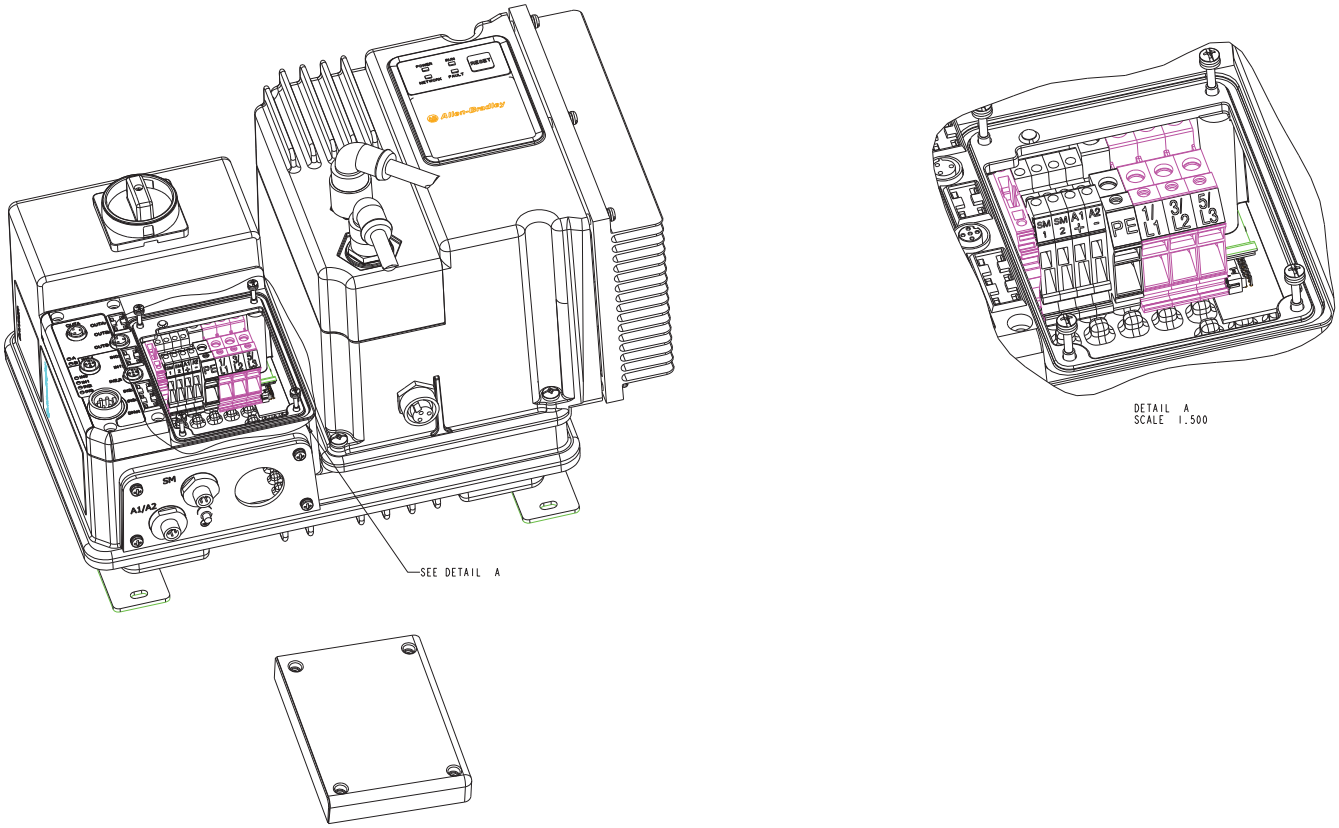

Table 2.2 Power, Control, Safety Monitor, and Ground Terminal Designations

Terminal Designations	No. of Poles	Description
SM1	2	Safety Monitor Input
SM2	2	Safety Monitor Input
A1 (+)	2	Control Power Input
A2 (-)	2	Control Power Common
PE	2	Ground
1/L1	2	Line Power Phase A
3/L3	2	Line Power Phase B
5/L5	2	Line Power Phase C

Optional Locking Clip

The clam shell design clips over the ArmorStart motor connector and motor cable to limit customer access from disconnecting the motor cable on the ArmorStart Distributed Motor Controller. The locking clip is an optional device that can be used, if desired.

Figure 2.4 Bulletin 280 Installation of Locking Clip

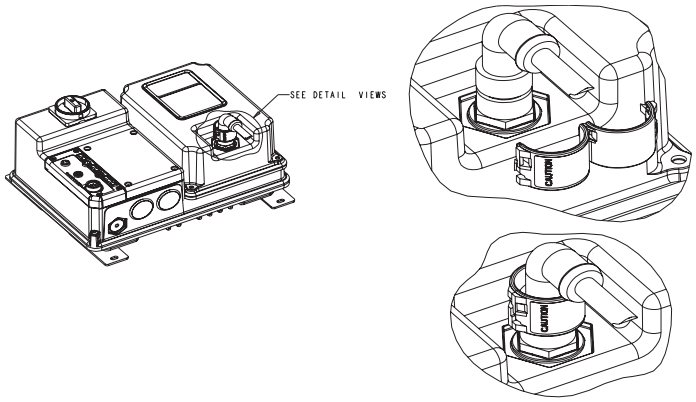

Figure 2.5 Bulletin 281Installation of Locking Clip

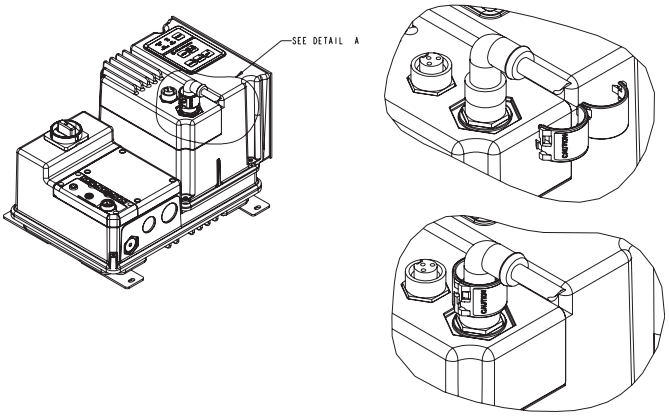

Figure 2.6 Bulletin 284 Installation of Locking Clip

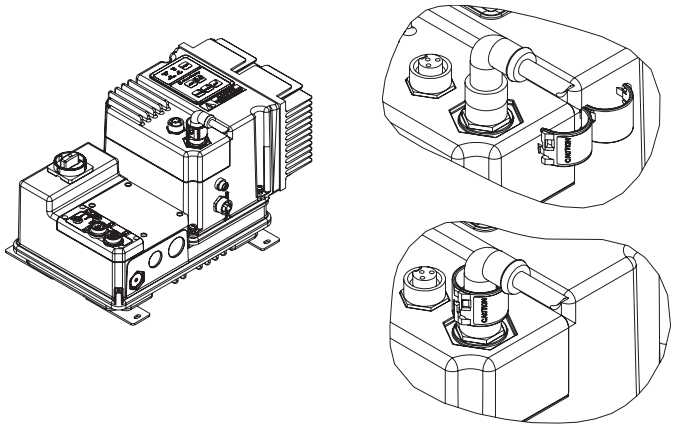

ArmorConnect Power Media

Description

The ArmorConnect power media offers both three-phase and control power cable system of cord sets, patch cords, receptacles, tees, reducers and accessories to be utilized with the ArmorStart Distributed Motor Controller. These cable system components allow quick connection of ArmorStart Distributed Motor Controllers, there by reducing installation time. They provide for repeatable, reliable connection of the three-phase and control power to the ArmorStart Distributed Motor Controller and motor by providing a plug-and-play environment that also avoids system mis-wiring. When specifying power media for use with the ArmorStart Distributed Motor Controllers (Bulletin 280/281 and 284) use only the Bulletin 280 ArmorConnect power media.

Figure 2.7 Three-Phase Power System Overview

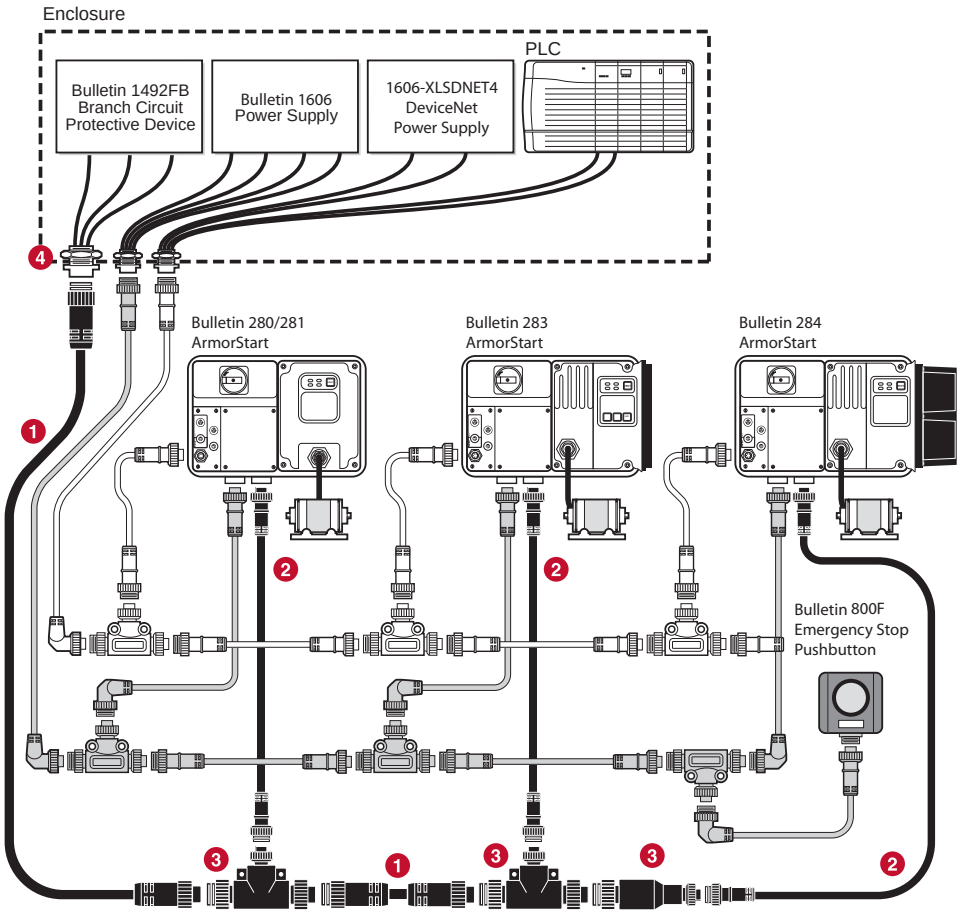

❶ Three-Phase Power Trunk- PatchCord cable with integral female or male connector on each end
Example Part Number: 280-PWR35A-M*

❷ Three-Phase Drop Cable- PatchCord cable with integral female or male connector on each end
Example Part Number: 280-PWR22A-M*

❸ Three-Phase Power Tees and Reducer -
Tee connects to a single drop line to trunk with quick change connectors – Part Number: 280-T35
Reducing Tee connects to a single drop line (Mini) to trunk (Quick change) connector – Part Number: 280-RT35
Reducer connects from quick change male connector to mini female connector– Part Number: 280-RA35

❹ Three-Phase Power Receptacles -
Female receptacles are a panel mount connector with flying leads – Part Number: 280-M35F-M1

ArmorStart Safety with ArmorConnect Connectivity

ArmorStart devices with 10 A short circuit protection rating

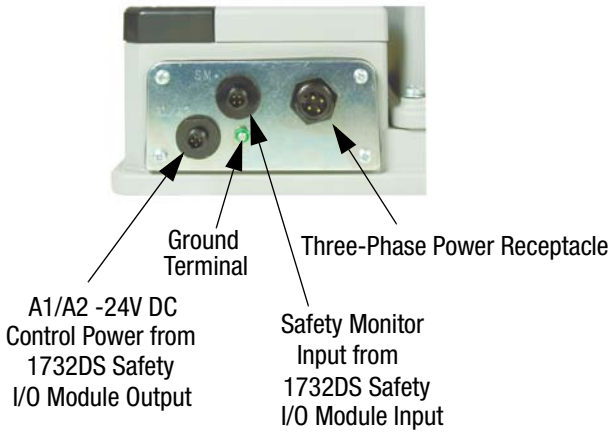

ArmorStart devices with 25 A short circuit protection rating

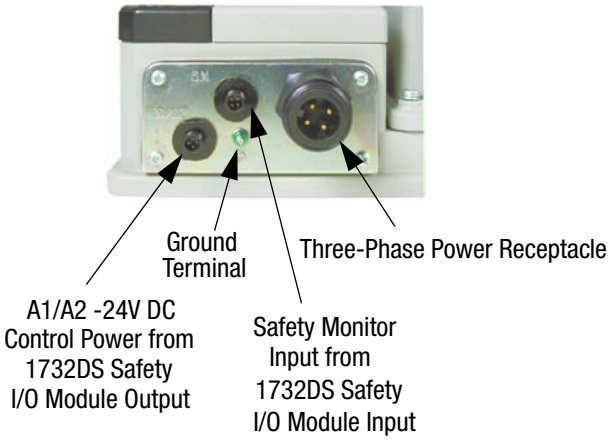

ArmorStart devices with conduit entrance

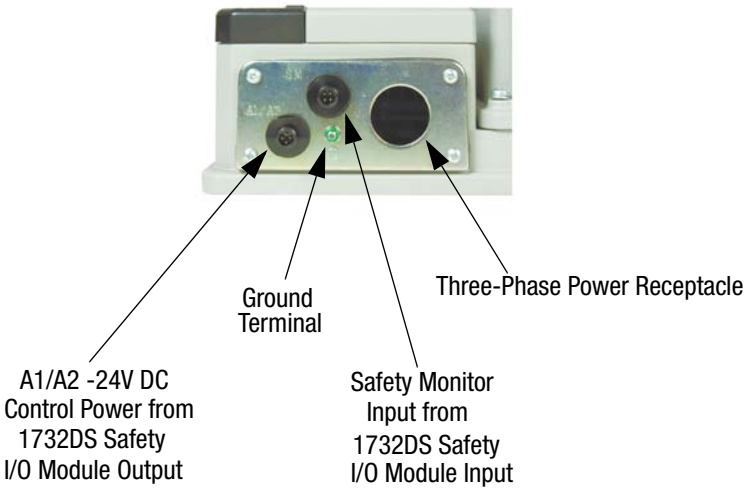

Terminal Designations

Terminal Designations	Description	Color Code
SM1	Safety Monitor Input	Brown
SM2	Safety Monitor Input	White
A1 (+)	Control Power Input	Brown
A2 (-)	Control Power Common	Blue
PE	Ground	Green/Yellow
1/L1	Line Power - Phase A	Black
3/L2	Line Power - Phase B	White
5/L3	Line Power - Phase C	Red

ArmorConnect Cable Ratings

The ArmorConnect power media cables are rated per UL Type TC 600V 90 °C Dry 75 °C Wet, Exposed Run (ER) or MTW 600V 90 °C or STOOW 105 °C 600V - CSA STOOW 600V FT2.

Branch Circuit Protection Requirements for ArmorConnect Three-Phase Power Media

When using ArmorConnect three-phase power media, only fuses can be used for the motor branch circuit protective device, for the group motor installations. The following fuse types are recommended: Class CC, T, or J type fuses.

Maximum Ratings	
Voltage (V)	480Y/277
Sym. Amps RMS	65 kA
Time Delay Fuse	50 A
Non-Delay Fuse	100 A

Group Motor Installations for USA and Canada Markets

The ArmorStart Distributed Motor Controllers are listed for use with each other in group installations per NFPA 79, Electrical Standard for Industrial Machinery. When applied according to the group motor installation requirements, two or more motors, of any rating or controller type, are permitted on a single branch circuit. Group Motor Installation has been successfully used for many years in the USA and Canada.

Note: For additional information regarding group motor installations with the ArmorStart Distributed Motor Controller, see Appendix C.

Wiring and Workmanship Guidelines

In addition to conduit and seal-tite raceway, it is acceptable to utilize cable that is dual rated Tray Cable, Type TC-ER and Cord, STOOW, for power and control wiring on ArmorStart installations. In the USA and Canada installations, the following guidance is outlined by the NEC and NFPA 79.

In industrial establishments where the conditions of maintenance and supervision ensure that only qualified persons service the installation, and where the exposed cable is continuously supported and protected against physical damage using mechanical protection, such as struts, angles, or channels, Type TC tray cable that complies with the crush and impact requirements of Type MC (Metal Clad) cable and is identified for such use with the marking Type TC-ER (Exposed Run)* shall be permitted between a cable tray and the utilization equipment or device as open wiring. The cable shall be secured at intervals not exceeding 1.8 m (6 ft) and installed in a “good workman-like” manner. Equipment grounding for the utilization equipment shall be provided by an equipment grounding conductor within the cable.

*Historically cable meeting these crush and impact requirements were designated and marked “Open Wiring”. Cable so marked is equivalent to the present Type TC-ER and can be used.

While the ArmorStart is intended for installation in factory floor environments of industrial establishments, the following must be taken into consideration when locating the ArmorStart in the application: Cables, including those for control voltage including 24V DC and communications, are not to be exposed to an operator or building traffic on a continuous basis. Location of the ArmorStart to minimize exposure to continual traffic is recommended. If location to minimize traffic flow is unavoidable, other barriers to minimize inadvertent exposure to the cabling should be considered. Routing cables should be done in such a manner to minimize inadvertent exposure and/or damage.

Additionally, if conduit or other raceways are not used, it is recommended that strain relief fittings be utilized when installing the cables for the control and power wiring through the conduit openings.

The working space around the ArmorStart may be minimized as the ArmorStart does not require examination, adjustment, servicing or maintenance while energized. In lieu of this service, the ArmorStart is meant to be unplugged and replaced after proper lockout/tag-out procedures have been employed.

Since the ArmorStart is available with a factory installed HOA keypad option this may require the ArmorStart to be selected and installed as follows if the application requires frequent use of the hand operated interface by the equipment operator:

1. They are not less than 0.6 m (2 ft) above the servicing level and are within easy reach of the normal working position of the operator.
2. The operator is not placed in a hazardous situation when operating them.
3. The possibility of inadvertent operation is minimized.

If the operated interface is used in industrial establishments where the conditions of maintenance and supervision ensure that only qualified persons operate and service the ArmorStart's operator interface, and the installation is located so that inadvertent operation is minimized then other installation locations with acceptable access can be provided.

DeviceNet Network Installation

The ArmorStart Distributed Motor Controller contains the equivalent of 30 in. (0.76 m) of DeviceNet drop cable's electrical characteristics and therefore 30 in. of drop cable must be included in the DeviceNet drop cable budget for each ArmorStart in addition to actual drop cable required for the installation.

Other DeviceNet System Design Considerations

The separation of the control power and DeviceNet power is recommended as a good design practice. This minimizes the load on the DeviceNet supply, and prevents transients which may be present on the control power system from influencing the communication controls. For additional information regarding 24V DC control power system design, see Appendix D.

Electromagnetic Compatibility (EMC)

The following guidelines are provided for EMC installation compliance.

General Notes (Bulletin 284 only)

- The motor Cable should be kept as short as possible in order to avoid electromagnetic emission as well as capacitive currents
- Conformity of the drive with CE EMC requirements does not guarantee an entire machine installation complies with CE EMC requirements. Many factors can influence total machine/ installation compliance.
- Using an EMI filter with any drive rating, may result in relatively high ground leakage currents. Therefore, the filter must only be used in installations and solidly grounded (bonded) to the building power distribution ground. Grounding must not rely on flexible cables and should not include any form of plug or socket that would permit inadvertent disconnection. Some local codes may require redundant ground connections. The integrity of all connections should be periodically checked.

Grounding

Connect a grounding conductor to the terminal provided as standard on each ArmorStart Distributed Motor Controller. Refer to Table 2.2 for grounding provision location. There is also an externally available ground terminal. Refer to Figure 7, Figure 8, and Figure 15.

Wiring

Wire in an industrial control application can be divided into three groups: power, control, and signal. The following recommendations for physical separation between these groups is provided to reduce the coupling effect.

- Minimum spacing between different wire groups in the same tray should be 6 in. (16 cm).
- Wire runs outside an enclosure should be run in conduit or have shielding/armor with equivalent attenuation.
- Different wire groups should be run in separate conduits.
- Minimum spacing between conduits containing different wire groups should be 3 in. (8 cm).

Bulletin 280/281 Programmable Parameters

Introduction

This chapter describes each programmable parameter and its function.

Parameter Programming

Each Distributed Motor Controller type will have a common set of parameters followed by a set of parameters that pertain to the individual starter type.

Refer to *Chapter 6, DeviceNet™ Commissioning* for instructions in using RSNetWorx™ for DeviceNet to modify parameter settings.

Important: Resetting the Factory Default Values Parameter 47, *Set to Defaults*, allows the installer to reset all parameters to the factory default values. It also resets the MAC ID to its factory default after DeviceNet Power is cycled if switches are set >63.

Important: Parameter setting changes downloaded to the ArmorStart™ take effect immediately, even during a "running" status.

Important: Parameter setting changes made in a configuration tool such as RSNetWorx for DeviceNet do not take effect in the ArmorStart until the installer applies or downloads the new settings to the device.

Parameter Group Listing

The Bulletin 280/281 ArmorStart contains eight parameter groups. The parameters shown in the DeviceLogix, DeviceNet, Starter Protection, User I/O, Misc. Parameter, ZIP Parameters, Starter Display and Starter Setup, are discussed in this chapter.

Table 3.1 Parameter Group Listing

DeviceLogix	DeviceNet	Starter Protection	User I/O	Misc.	ZIP Parameters	Starter Display	Starter Setup
1 Hdw Inputs	**10** Autobaud Enable	**22** Breaker Type	**30** Off-to-On Delay	**45** Keypad Mode	**67** AutoRun Zip	**101** Phase A Current	**106** FLA Setting
2 Network Inputs	**11** Consumed IO Assy	**23** PrFltResetMode	**31** On-to-Off Delay	**46** Keypad Disable	**68** Zone Produced EPR	**102** Phase B Current	**107** Overload Class
3 Network Outputs	**12** Produced IO Assy	**24** Pr Fault Enable	**32** In Sink/Source	**47** Set To Defaults	**69** Zone Produced PIT	**103** Phase C Current	**108** OL Reset Level
4 Trip Status	**13** Prod Assy Word 0	**25** Pr Fault Reset	**33** OutA Pr FltState	**56** Base Enclosure	**70** Zone #1 MacId	**104** Average Current	
5 Starter Status	**14** Prod Assy Word 1	**26** StrtrDN FltState	**34** OutA Pr FltValue	**57** Base Option	**71** Zone #2 MacId	**105**% Therm Utilized	
6 DNet Status	**15** Prod Assy Word 2	**27** StrtrDN FltValue	**35** OutA DN FltState	**58** Wiring Option	**72** Zone #3 MacId		
7 Starter Command	**16** Prod Assy Word 3	**28** StrtrDN IdlState	**36** OutA DN FltValue	**59** Starter Enclosure	**73** Zone #4 MacId		
8 Network Override	**17** Consumed IO Size	**29** StrtrDN IdlValue	**37** OutA DN IdlState	**60** Starter Options	**74** Zone #1 Health		
9 Comm Override	**18** Produced IO Size	**61** Last PR Fault	**38** OutA DN IdlValue		**75** Zone #2 Health		
	19 Starter COS Mask	**62** Warning Status	**39** OutB Pr FltState		**76** Zone #3 Health		
	20 Net Out COS Mask		**40** OutB Pr FltValue		**77** Zone #4 Health		
	21 DNet Voltage		**41** OutB DN FltState		**78** Zone #1 Mask		
			42 OutB DN FltValue		**79** Zone #2 Mask		
			43 OutB DN IdlState		**80** Zone #3 Mask		
			44 OutB DN IdlValue		**81** Zone #4 Mask		
					82 Zone #1 Offset		
					83 Zone #2 Offset		
					84 Zone #3 Offset		
					85 Zone #4 Offset		
					86 Zone #1 EPR		
					87 Zone #2 EPR		
					88 Zone #3 EPR		
					89 Zone #4 EPR		
					90 Zone #1 Control		
					91 Zone #2 Control		
					92 Zone #3 Control		
					93 Zone #4 Control		
					94 Zone #1 Key		
					95 Zone #2 Key		
					96 Zone #3 Key		
					97 Zone #4 Key		
					98 Device Value Key		
					99 Zone Ctrl Enable		

DeviceLogix™ Group

Hdw Inputs This parameter provides status of hardware inputs	Parameter Number	1
	Access Rule	GET
	Data Type	WORD
	Group	DeviceLogix
	Units	—
	Minimum Value	0
	Maximum Value	15
	Default Value	0

Bit				Function
3	2	1	0	
—	—	—	X	Input 0
—	—	X	—	Input 1
—	X	—	—	Input 2
X	—	—	—	Input 3

Network Inputs This parameter provides status of network inputs	Parameter Number	2
	Access Rule	GET
	Data Type	WORD
	Group	DeviceLogix
	Units	—
	Minimum Value	0
	Maximum Value	65535
	Default Value	0

Bit																Function
15	**14**	**13**	**12**	**11**	**10**	**9**	**8**	**7**	**6**	**5**	**4**	**3**	**2**	**1**	**0**	
—	—	—	—	—	—	—	—	—	—	—	—	—	—	—	X	Net Input 0
—	—	—	—	—	—	—	—	—	—	—	—	—	—	X	—	Net Input 1
—	—	—	—	—	—	—	—	—	—	—	—	—	X	—	—	Net input 2
—	—	—	—	—	—	—	—	—	—	—	—	X	—	—	—	Net Input 3
—	—	—	—	—	—	—	—	—	—	—	X	—	—	—	—	Net Input 4
—	—	—	—	—	—	—	—	—	—	X	—	—	—	—	—	Net Input 5
—	—	—	—	—	—	—	—	—	X	—	—	—	—	—	—	Net Input 6
—	—	—	—	—	—	—	—	X	—	—	—	—	—	—	—	Net Input 7
—	—	—	—	—	—	—	X	—	—	—	—	—	—	—	—	Net Input 8
—	—	—	—	—	—	X	—	—	—	—	—	—	—	—	—	Net Input 9
—	—	—	—	—	X	—	—	—	—	—	—	—	—	—	—	Net Input 10
—	—	—	—	X	—	—	—	—	—	—	—	—	—	—	—	Net Input 11
—	—	—	X	—	—	—	—	—	—	—	—	—	—	—	—	Net Input 12
—	—	X	—	—	—	—	—	—	—	—	—	—	—	—	—	Net Input 13
—	X	—	—	—	—	—	—	—	—	—	—	—	—	—	—	Net Input 14
X	—	—	—	—	—	—	—	—	—	—	—	—	—	—	—	Net Input 15

Network Outputs This parameter provides status of network outputs	Parameter Number	3
	Access Rule	GET
	Data Type	WORD
	Group	DeviceLogix
	Units	—
	Minimum Value	0
	Maximum Value	32767
	Default Value	0

Bit															Function
14	13	12	11	10	9	8	7	6	5	4	3	2	1	0	
—	—	—	—	—	—	—	—	—	—	—	—	—	—	X	Net Output 0
—	—	—	—	—	—	—	—	—	—	—	—	—	X	—	Net Output 1
—	—	—	—	—	—	—	—	—	—	—	—	X	—	—	Net Output 2
—	—	—	—	—	—	—	—	—	—	—	X	—	—	—	Net Output 3
—	—	—	—	—	—	—	—	—	—	X	—	—	—	—	Net Output 4
—	—	—	—	—	—	—	—	—	X	—	—	—	—	—	Net Output 5
—	—	—	—	—	—	—	—	X	—	—	—	—	—	—	Net Output 6
—	—	—	—	—	—	—	X	—	—	—	—	—	—	—	Net Output 7
—	—	—	—	—	—	X	—	—	—	—	—	—	—	—	Net Output 8
—	—	—	—	—	X	—	—	—	—	—	—	—	—	—	Net Output 9
—	—	—	—	X	—	—	—	—	—	—	—	—	—	—	Net Output 10
—	—	—	X	—	—	—	—	—	—	—	—	—	—	—	Net Output 11
—	—	X	—	—	—	—	—	—	—	—	—	—	—	—	Net Output 12
—	X	—	—	—	—	—	—	—	—	—	—	—	—	—	Net Output 13
X	—	—	—	—	—	—	—	—	—	—	—	—	—	—	Net Output 14

Trip Status	Parameter Number	4
This parameter provides trip identification	Access Rule	GET
	Data Type	WORD
	Group	DeviceLogix Setup
	Units	—
	Minimum Value	0
	Maximum Value	16383
	Default Value	0

Bit														Function
13	12	11	10	9	8	7	6	5	4	3	2	1	0	
—	—	—	—	—	—	—	—	—	—	—	—	—	X	Short Circuit
—	—	—	—	—	—	—	—	—	—	—	—	X	—	Overload
—	—	—	—	—	—	—	—	—	—	—	X	—	—	Phase Loss
—	—	—	—	—	—	—	—	—	—	X	—	—	—	Reserved
—	—	—	—	—	—	—	—	—	X	—	—	—	—	Reserved
—	—	—	—	—	—	—	—	X	—	—	—	—	—	Control Power
—	—	—	—	—	—	—	X	—	—	—	—	—	—	I/O Fault
—	—	—	—	—	—	X	—	—	—	—	—	—	—	Over Temperature
—	—	—	—	—	X	—	—	—	—	—	—	—	—	Phase Imbalance
—	—	—	—	X	—	—	—	—	—	—	—	—	—	Dnet Power Loss
—	—	—	X	—	—	—	—	—	—	—	—	—	—	Reserved
—	—	X	—	—	—	—	—	—	—	—	—	—	—	Reserved
—	X	—	—	—	—	—	—	—	—	—	—	—	—	EEprom
X	—	—	—	—	—	—	—	—	—	—	—	—	—	HW Fault

Starter Status This parameter provides the status of the starter	Parameter Number	5
	Access Rule	GET
	Data Type	WORD
	Group	DeviceLogix
	Units	—
	Minimum Value	0
	Maximum Value	16383
	Default Value	0

Bit														**Function**
13	**12**	**11**	**10**	**9**	**8**	**7**	**6**	**5**	**4**	**3**	**2**	**1**	**0**	
—	—	—	—	—	—	—	—	—	—	—	—	—	X	Tripped
—	—	—	—	—	—	—	—	—	—	—	—	X	—	Warning
—	—	—	—	—	—	—	—	—	—	—	X	—	—	Running Fwd
—	—	—	—	—	—	—	—	—	—	X	—	—	—	Running Rev
—	—	—	—	—	—	—	—	—	X	—	—	—	—	Ready
—	—	—	—	—	—	—	—	X	—	—	—	—	—	Net Ctl Status
—	—	—	—	—	—	—	X	—	—	—	—	—	—	Reserved
—	—	—	—	—	—	X	—	—	—	—	—	—	—	At Reference
—	—	—	—	—	X	—	—	—	—	—	—	—	—	Reserved
—	—	—	—	X	—	—	—	—	—	—	—	—	—	Reserved
—	—	—	X	—	—	—	—	—	—	—	—	—	—	Reserved
—	—	X	—	—	—	—	—	—	—	—	—	—	—	Keypad Hand
—	X	—	—	—	—	—	—	—	—	—	—	—	—	HOA Status
X	—	—	—	—	—	—	—	—	—	—	—	—	—	140M On

DNet Status This parameter provides status of the DeviceNet connection	Parameter Number	6
	Access Rule	GET
	Data Type	WORD
	Group	DeviceLogix
	Units	—
	Minimum Value	0
	Maximum Value	32, 767
	Default Value	0

Bit																Function:
15	14	13	12	11	10	9	8	7	6	5	4	3	2	1	0	
—	—	—	—	—	—	—	—	—	—	—	—	—	—	—	X	Explicit Connection
—	—	—	—	—	—	—	—	—	—	—	—	—	—	X	—	I/O Connection
—	—	—	—	—	—	—	—	—	—	—	—	—	X	—	—	Explicit Fault
—	—	—	—	—	—	—	—	—	—	—	—	X	—	—	—	I/O Fault
—	—	—	—	—	—	—	—	—	—	—	X	—	—	—	—	I/O Idle
—	—	—	—	—	—	—	—	X	X	X	—	—	—	—	—	Reserved
—	—	—	—	—	—	—	X	—	—	—	—	—	—	—	—	ZIP 1 Cnxn
—	—	—	—	—	—	X	—	—	—	—	—	—	—	—	—	ZIP 1 Flt
—	—	—	—	—	X	—	—	—	—	—	—	—	—	—	—	ZIP 2 Cnxn
—	—	—	—	X	—	—	—	—	—	—	—	—	—	—	—	ZIP 2 Flt
—	—	—	X	—	—	—	—	—	—	—	—	—	—	—	—	ZIP 3 Cnxn
—	—	X	—	—	—	—	—	—	—	—	—	—	—	—	—	ZIP 3 Flt
—	X	—	—	—	—	—	—	—	—	—	—	—	—	—	—	ZIP 4 Cnxn
X	—	—	—	—	—	—	—	—	—	—	—	—	—	—	—	ZIP 4 Flt

Starter Command	Parameter Number	7
The parameter provides the status of the starter command.	Access Rule	GET
	Data Type	WORD
	Group	DeviceLogix
	Units	—
	Minimum Value	0
	Maximum Value	255
	Default Value	0

Bit								Function:
7	6	5	4	3	2	1	0	
—	—	—	—	—	—	—	X	Run Fwd
—	—	—	—	—	—	X	—	Run Rev
—	—	—	—	—	X	—	—	Fault Reset
—	—	—	—	X	—	—	—	Reserved
—	—	—	X	—	—	—	—	Reserved
—	—	X	—	—	—	—	—	Reserved
—	X	—	—	—	—	—	—	User Out A
X	—	—	—	—	—	—	—	User Out B

Network Override	Parameter Number	8
This parameter allows for the local logic to override a Network fault 0 = Disable 1 = Enable	Access Rule	GET/SET
	Data Type	BOOL
	Group	DeviceLogix
	Units	—
	Minimum Value	0
	Maximum Value	1
	Default Value	0

Comm Override This parameter allows for local logic to override the absence of an I/O connection 0 = Disable 1 = Enable	Parameter Number	9
	Access Rule	GET/SET
	Data Type	BOOL
	Group	DeviceLogix
	Units	—
	Minimum Value	0
	Maximum Value	1
	Default Value	0

DeviceNet Group

Autobaud Enable When this parameter is enabled, the device will attempt to determine the network baud rate and set its baud rate to the same, provided network traffic exists. At least one node with an established baud rate must exist on the network for autobaud to occur. 0 = Disable 1 = Enable	Parameter Number	10
	Access Rule	GET/SET
	Data Type	BOOL
	Group	DeviceNet
	Units	—
	Minimum Value	0
	Maximum Value	1
	Default Value	1

Consumed I/O Assy This parameter selects the format of the I/O data consumed. Enter a Consumed I/O assembly instance number to select a data format.	Parameter Number	11
	Access Rule	GET/SET
	Data Type	USINT
	Group	DeviceNet
	Units	—
	Minimum Value	0
	Maximum Value	187
	Default Value	160

Produced I/O Assy This parameter selects the format of the I/O data produced. Enter a Produces I/O assembly instance number to select a data format.	Parameter Number	12
	Access Rule	GET/SET
	Data Type	USINT
	Group	DeviceNet
	Units	—
	Minimum Value	0
	Maximum Value	190
	Default Value	161

Prod Assy Word 0 This parameter is used to build bytes 0-1 for produced assembly 120	Parameter Number	13
	Access Rule	GET/SET
	Data Type	USINT
	Group	DeviceNet
	Units	—
	Minimum Value	0
	Maximum Value	108
	Default Value	1

Produced Assy Word 1 This parameter is used to build bytes 2-3 for produced assembly 120	Parameter Number	14
	Access Rule	GET/SET
	Data Type	USINT
	Group	DeviceNet
	Units	—
	Minimum Value	0
	Maximum Value	108
	Default Value	4

Prod Assy Word 2 This parameter is used to build bytes 4-5 for produced assembly 120	Parameter Number	15
	Access Rule	GET/SET
	Data Type	USINT
	Group	DeviceNet
	Units	—
	Minimum Value	0
	Maximum Value	108
	Default Value	5

Prod Assy Word 3 This parameter is used to build bytes 6-7 for produced assembly 120	Parameter Number	16
	Access Rule	GET/SET
	Data Type	USINT
	Group	DeviceNet
	Units	—
	Minimum Value	0
	Maximum Value	108
	Default Value	6

Consumed I/O Size This parameter reflects the consumed I/O data size in bytes.	Parameter Number	17
	Access Rule	GET
	Data Type	USINT
	Group	DeviceNet
	Units	—
	Minimum Value	0
	Maximum Value	8
	Default Value	1

Produced I/O Size This parameter reflects the produced I/O data size in bytes.	Parameter Number	18
	Access Rule	GET
	Data Type	USINT
	Group	DeviceNet
	Units	—
	Minimum Value	0
	Maximum Value	8
	Default Value	2

Starter COS Mask This parameter allows the installer to define the change-of-state conditions that will result in a change-of-state message being produced	Parameter Number	19
	Access Rule	GET/SET
	Data Type	WORD
	Group	DeviceNet
	Units	—
	Minimum Value	0
	Maximum Value	16383
	Default Value	16149 ❶ 16157 ❷

❶ Bulletin 280 products.
❷ Bulletin 281 products.

Bit														Function
13	12	11	10	9	8	7	6	5	4	3	2	1	0	
—	—	—	—	—	—	—	—	—	—	—	—	—	X	Tripped
—	—	—	—	—	—	—	—	—	—	—	—	X	—	Warning
—	—	—	—	—	—	—	—	—	—		X	—	—	Running Fwd
—	—	—	—	—	—	—	—	—	—	X	—	—	—	Running Rev
—	—	—	—	—	—	—	—	—	X	—	—	—	—	Ready
—	—	—	—	—	—	—	—	X	—	—	—	—	—	Reserved
—	—	—	—	—	—	—	X	—	—	—	—	—	—	Reserved
—	—	—	—	—	—	X	—	—	—	—	—	—	—	Reserved
—	—	—	—	—	X	—	—	—	—	—	—	—	—	Input 0
—	—	—	—	X	—	—	—	—	—	—	—	—	—	Input 1
—	—	—	X	—	—	—	—	—	—	—	—	—	—	Input 2
—	—	X	—	—	—	—	—	—	—	—	—	—	—	Input 3
—	X	—	—	—	—	—	—	—	—	—	—	—	—	HOA Status
X	—	—	—	—	—	—	—	—	—	—	—	—	—	140M On

Net Out COS Mask This parameter sets the bits that will trigger a COS message when network outputs change state.	Parameter Number	20
	Access Rule	GET/SET
	Data Type	WORD
	Group	DeviceNet
	Units	—
	Minimum Value	0
	Maximum Value	32767
	Default Value	0

Bit															Function
14	**13**	**12**	**11**	**10**	**9**	**8**	**7**	**6**	**5**	**4**	**3**	**2**	**1**	**0**	
—	—	—	—	—	—	—	—	—	—	—	—	—	—	X	Net Output 0
—	—	—	—	—	—	—	—	—	—	—	—	—	X	—	Net Output 1
—	—	—	—	—	—	—	—	—	—	—	—	X	—	—	Net Output 2
—	—	—	—	—	—	—	—	—	—	—	X	—	—	—	Net Output 3
—	—	—	—	—	—	—	—	—	—	X	—	—	—	—	Net Output 4
—	—	—	—	—	—	—	—	—	X	—	—	—	—	—	Net Output 5
—	—	—	—	—	—	—	—	X	—	—	—	—	—	—	Net Output 6
—	—	—	—	—	—	—	X	—	—	—	—	—	—	—	Net Output 7
—	—	—	—	—	—	X	—	—	—	—	—	—	—	—	Net Output 8
—	—	—	—	—	X	—	—	—	—	—	—	—	—	—	Net Output 9
—	—	—	—	X	—	—	—	—	—	—	—	—	—	—	Net Output 10
—	—	—	X	—	—	—	—	—	—	—	—	—	—	—	Net Output 11
—	—	X	—	—	—	—	—	—	—	—	—	—	—	—	Net Output 12
—	X	—	—	—	—	—	—	—	—	—	—	—	—	—	Net Output 13
X	—	—	—	—	—	—	—	—	—	—	—	—	—	—	Net Output 14

Dnet Voltage This parameter provides the voltage measurement for the DeviceNet network	Parameter Number	21
	Access Rule	GET
	Data Type	UINT
	Group	DeviceNet
	Units	xx.xx Volts
	Minimum Value	0
	Maximum Value	6500
	Default Value	0

Starter Protection Group

Breaker Type This parameter identifies the Bulletin 140M used in this product 0 = 140M-D8N-C10 1 = 140M-D8N-C25	Parameter Number	22
	Access Rule	GET/SET
	Data Type	BOOL
	Group	Starter Protection
	Units	—
	Minimum Value	0
	Maximum Value	1
	Default Value	0

PrFlt Reset Mode	Parameter Number	23
	Access Rule	GET/SET
This parameter configures the Protection Fault reset mode.	Data Type	BOOL
	Group	Starter Protection
0= Manual 1= Automatic	Units	—
	Minimum Value	0
	Maximum Value	1
	Default Value	0

Pr Fault Enable	Parameter Number	24
	Access Rule	GET/SET
This parameter enables the Protection Fault by setting the bit to 1	Data Type	WORD
	Group	Starter Protection Setup
	Units	—
	Minimum Value	0
	Maximum Value	16383
	Default Value	12419

Bit														**Function**
13	**12**	**11**	**10**	**9**	**8**	**7**	**6**	**5**	**4**	**3**	**2**	**1**	**0**	
—	—	—	—	—	—	—	—	—	—	—	—	—	X	Short Circuit
—	—	—	—	—	—	—	—	—	—	—	—	X	—	Overload
—	—	—	—	—	—	—	—	—	—	—	X	—	—	Phase Loss
—	—	—	—	—	—	—	—	—	—	X	—	—	—	Reserved
—	—	—	—	—	—	—	—	—	X	—	—	—	—	Reserved
—	—	—	—	—	—	—	—	X	—	—	—	—	—	Control Power
—	—	—	—	—	—	—	X	—	—	—	—	—	—	I/O Fault
—	—	—	—	—	—	X	—	—	—	—	—	—	—	Over Temperature
—	—	—	—	—	X	—	—	—	—	—	—	—	—	Phase Imbalance
—	—	—	—	X	—	—	—	—	—	—	—	—	—	Dnet Power Loss
—	—	—	X	—	—	—	—	—	—	—	—	—	—	Reserved
—	—	X	—	—	—	—	—	—	—	—	—	—	—	Reserved
—	X	—	—	—	—	—	—	—	—	—	—	—	—	Eeprom
X	—	—	—	—	—	—	—	—	—	—	—	—	—	HW Fault

Pr Fault Reset	Parameter Number	25
	Access Rule	GET/SET
This parameter resets the Protection Fault on a transition of 0-->1.	Data Type	BOOL
	Group	Starter Protection
	Units	—
	Minimum Value	0
	Maximum Value	1
	Default Value	0

StrtrDN FltState	Parameter Number	26
This parameter in conjunction with Parameter 27 defines how the starter will respond when a DeviceNet fault occurs. When set to “1”, hold to last state occurs. When set to “0”, will go to DnFlt Value on DN faults as determined by Parameter 27.	Access Rule	GET/SET
	Data Type	BOOL
	Group	Starter Protection
	Units	—
	Minimum Value	0
	Maximum Value	1
	Default Value	0

StrtrDN FltValue	Parameter Number	27
This parameter determines how the starter will be commanded in the event of a Device Net fault. 0 = OFF 1 = ON	Access Rule	GET
	Data Type	BOOL
	Group	Starter Protection
	Units	—
	Minimum Value	0
	Maximum Value	1
	Default Value	0

StrtrDN IdlState	Parameter Number	28
This parameter in conjunction with Parameter 29 defines how the starter will respond when a DeviceNet network is idle. When set to “1”, hold to last state occurs. When set to “0”, will go to DnIdl Value on DN Idle as determined by Parameter 29.	Access Rule	GET/SET
	Data Type	BOOL
	Group	Starter Protection
	Units	—
	Minimum Value	0
	Maximum Value	1
	Default Value	0

StrtrDN IdlValue	Parameter Number	29
This parameter determines the state that starter assumes when the network is idle and Parameter 28 is set to “0” 0 = OFF 1 = ON	Access Rule	GET
	Data Type	BOOL
	Group	Starter Protection
	Units	—
	Minimum Value	0
	Maximum Value	1
	Default Value	0

Last PR Fault 0 = None 1 = Hardware Short Circuit 2 = Software Short Circuit 3 = Motor Overload 4 = Reserved 5 = Phase Loss 6 – 12 = Reserved 13 = Control Power Loss 14 = Control Power Fuse 15 = I/O Short 16 = Output Fuse 17 = Overtemp 18= Reserved 19 = Phase Imbalance 20 = Reserved 21 = DNet Power Loss 22 = Internal Comm 23-26 = Reserved 27 = MCB EEPROM 28 = Base EEPROM 29 = Reserved 30 = Wrong Base 31 = Wrong CTs 32-100 = Reserved	Parameter Number	61
	Access Rule	GET
	Data Type	UINT
	Group	Starter Protection
	Units	—
	MinimumValue	0
	Maximum Value	100
	Default Value	0

Warning Status This parameter warns the user of a condition, without faulting	Parameter Number	62
	Access Rule	GET
	Data Type	WORD
	Group	Starter Protection
	Units	—
	MinimumValue	0
	Maximum Value	65535
	Default Value	0

Bit																Warning
15	**14**	**13**	**12**	**11**	**10**	**9**	**8**	**7**	**6**	**5**	**4**	**3**	**2**	**1**	**0**	
															X	reserved
														X		reserved
													X			Phase Loss
												X				reserved
											X					reserved
										X						Control Power
									X							IO Warning
								X								reserved
							X									Phase Imbalance
						X										DeviceNet
					X											reserved
				X												reserved
			X													reserved
		X														Hardware
	X															reserved
X																reserved

User I/O

Off-to-On Delay This parameter allows the installer to program a time duration before an input is reported “ON”	Parameter Number	30
	Access Rule	GET/SET
	Data Type	UINT
	Group	User I/O
	Units	ms
	Minimum Value	0
	Maximum Value	65.000
	Default Value	0

On-to-Off Delay This parameter allows the installer to program a time duration before an input is reported “OFF”	Parameter Number	31
	Access Rule	GET/SET
	Data Type	UINT
	Group	User I/O
	Units	ms
	Minimum Value	0
	Maximum Value	65.000
	Default Value	0

In Sink/Source This parameter allows the installer to program the inputs to be sink or source. 0=Sink 1=Source	Parameter Number	32
	Access Rule	GET/SET
	Data Type	BOOL
	Group	User I/
	Units	—
	Minimum Value	0
	Maximum Value	1
	Default Value	0

OutA Pr FltState This parameter in conjunction with Parameter 34 defines how Output A will respond when a protection trip occurs. When set to “1”, Output A continues to operate as command via the network. When set to “0”, Output A will open or close as determined by setting in Parameter 34	Parameter Number	33
	Access Rule	GET/SET
	Data Type	BOOL
	Group	User I/O
	Units	—
	Minimum Value	0
	Maximum Value	1
	Default Value	0

OutA Pr FltValue This parameter determines the state the Out A assumes when a trip occurs and Parameter 33 is set to “0” 0 = Open 1 = Close	Parameter Number	34
	Access Rule	GET/SET
	Data Type	BOOL
	Group	User I/O
	Units	—
	Minimum Value	0
	Maximum Value	1
	Default Value	0

OutA DN FltState This parameter in conjunction with Parameter 36 defines how Output A will respond when a DeviceNet network fault occurs. When set to “1”, Output A will hold state prior to trip occurrence. When set to “0”, Output A will open or close as determined by setting in Parameter 36	Parameter Number	35
	Access Rule	GET/SET
	Data Type	BOOL
	Group	User I/O
	Units	—
	Minimum Value	0
	Maximum Value	1
	Default Value	0

OutA DN FltValue This parameter determines the state that Output A assumes when a DeviceNet network fault occurs and Parameter 35 is set to “0” 0 = Open 1 = Close	Parameter Number	36
	Access Rule	GET/SET
	Data Type	BOOL
	Group	User I/O
	Units	—
	Minimum Value	0
	Maximum Value	1
	Default Value	0

OutA DN IdlState This parameter in conjunction with Parameter 38 defines how Output A will respond when the DeviceNet network is idle. When set to “0”, Output A will open or close as determined by the setting in Parameter 38 The DN Flt parameters supersede the Dn Idl parameters	Parameter Number	37
	Access Rule	GET/SET
	Data Type	BOOL
	Group	User I/O
	Units	—
	Minimum Value	0
	Maximum Value	1
	Default Value	0

OutA DN IdlValue This parameter determines the state that Output A assumes when the network is idle and Parameter 37 is set to “0” 0 = Open 1 = Close	Parameter Number	38
	Access Rule	GET/SET
	Data Type	BOOL
	Group	User I/O
	Units	—
	Minimum Value	0
	Maximum Value	1
	Default Value	0

OutB Pr FltState This parameter in conjunction with Parameter 40 defines how Output B will respond when a protection trip occurs. When set to “1”, Output B continue to operate as command via the network. When set to “0”, Output B will open or close as determined by setting in Parameter 40	Parameter Number	39
	Access Rule	GET/SET
	Data Type	BOOL
	Group	User I/O
	Units	—
	Minimum Value	0
	Maximum Value	1
	Default Value	0

OutB Pr FltValue This parameter determines the state the Out B assumes when a protection trip occurs and Parameter 39 is set to “0” 0 = Open 1 = Close	Parameter Number	40
	Access Rule	GET/SET
	Data Type	BOOL
	Group	User I/O
	Units	—
	Minimum Value	0
	Maximum Value	1
	Default Value	0

OutB DN FltState This parameter in conjunction with Parameter 42 defines how Output B will respond when a DeviceNet network fault occurs. When set to “1”, Output B will hold state prior to trip occurrence. When set to “0”, Output B will open or close as determined by setting in Parameter 42	Parameter Number	41
	Access Rule	GET/SET
	Data Type	BOOL
	Group	User I/O
	Units	—
	Minimum Value	0
	Maximum Value	1
	Default Value	0

OutB DN FltValue This parameter determines the state that Output B assumes when a DeviceNet network fault occurs and Parameter 41 is set to “0” 0 = Open 1 = Close	Parameter Number	42
	Access Rule	GET/SET
	Data Type	BOOL
	Group	User I/O
	Units	—
	Minimum Value	0
	Maximum Value	1
	Default Value	0

OutB DN IdlState This parameter in conjunction with Parameter 44 defines how Output B will respond when the DeviceNet network is idle. When set to “0”, Output B will open or close as determined by the setting in Parameter 44. The DN Flt parameters supersede the Dn Idl parameters	Parameter Number	43
	Access Rule	GET/SET
	Data Type	BOOL
	Group	User I/O
	Units	—
	Minimum Value	0
	Maximum Value	1
	Default Value	0

OutB DN IdlValue	Parameter Number	44
This parameter determines the state that Output B assumes when the network is idle and Parameter 43 is set to “0” 0 = Open 1 = Close	Access Rule	GET/SET
	Data Type	BOOL
	Group	User I/O
	Units	—
	Minimum Value	0
	Maximum Value	1
	Default Value	0

Misc. Group

Keypad Mode	Parameter Number	45
This parameter selects if the keypad operation is maintained or momentary 0= Maintained 1= Momentary	Access Rule	GET/SET
	Data Type	BOOL
	Group	Misc.
	Units	—
	Minimum Value	0
	Maximum Value	1
	Default Value	0

Keypad Disable	Parameter Number	46
This parameter disables all keypad function except for the “OFF” and “RESET” buttons 0=Not Disabled 1=Disabled	Access Rule	GET/SET
	Data Type	BOOL
	Group	Misc.
	Units	—
	Minimum Value	0
	Maximum Value	1
	Default Value	0

Set to Defaults	Parameter Number	47
This parameter if set to 1 will set the device to the factory defaults 0=No Operation 1=Set to Defaults	Access Rule	GET/SET
	Data Type	BOOL
	Group	Misc.
	Units	—
	Minimum Value	0
	Maximum Value	1
	Default Value	0

Base Enclosure	Parameter Number	56
Indicates the ArmorStart Base unit enclosure rating Bit 0 = IP67 Bit 1 = Nema 4X Bit 2-15 = Reserved	Access Rule	GET
	Data Type	WORD
	Group	Misc.
	Units	—
	MinimumValue	0
	Maximum Value	65535
	Default Value	0

Base Options Indicates the options for the ArmorStart Base unit Bit 0 = Output Fuse Bit 1 = Safety Monitor Bit 2 = CP Fuse Detect Bits 3-7 = Reserved Bit 8 = 10A Base Bit 9 = 25A Base Bit 10-15 = Reserved	Parameter Number	57
	Access Rule	GET
	Data Type	WORD
	Group	Misc.
	Units	—
	MinimumValue	0
	Maximum Value	65535
	Default Value	0

Wiring Options Bit 0 = Conduit Bit 1 = Round Media Bits 2-15 = Reserved	Parameter Number	58
	Access Rule	GET
	Data Type	WORD
	Group	Misc.
	Units	—
	MinimumValue	0
	Maximum Value	65535
	Default Value	0

Starter Enclosure Bit 0 = IP67 Bit 1 = NEMA 4x Bits 2-15 reserved	Parameter Number	59
	Access Rule	GET
	Data Type	WORD
	Group	Misc.
	Units	—
	MinimumValue	0
	Maximum Value	65535
	Default Value	—

Starter Option Bit 0 = HOA Keypad Bit 1 = Safety Monitor Bit 2 = Source Brake Bits 4-15 = Reserved	Parameter Number	60
	Access Rule	GET
	Data Type	WORD
	Group	Misc.
	Units	—
	MinimumValue	0
	Maximum Value	66535
	Default Value	—

ZIP Parameters

AutoRun Zip Enables ZIP data production on power up 0=Disable 1=Enable	Parameter Number	67
	Access Rule	Get/Set
	Data Type	BOOL
	Group	ZIP Parameters
	Units	
	MinimumValue	0
	Maximum Value	1
	Default Value	0

Zone Produced EPR The Expected Packet Rate in msec. Defines the rate at which ZIP data is produced. Defaults to 75 msec.	Parameter Number	68
	Access Rule	GET/SET
	Data Type	UINT
	Group	Zip Parameter
	Units	msec
	MinimumValue	0
	Maximum Value	65535
	Default Value	75

Zone Produced PIT The Production Inhibit Time in msec. Defines the minimum time between Change of State data production	Parameter Number	69
	Access Rule	GET/SET
	Data Type	UINT
	Group	ZIP Parameters
	Units	msec
	MinimumValue	0
	Maximum Value	65535
	Default Value	75

Zone #1 MAC ID The node address of the device whose data is to be consumed for zone 1	Parameter Number	70
	Access Rule	GET/SET
	Data Type	USINT
	Group	ZIP Parameters
	Units	—
	MinimumValue	0
	Maximum Value	64
	Default Value	64

Zone #2 MAC ID The node address of the device whose data is to be consumed for zone 2	Parameter Number	71
	Access Rule	GET/SET
	Data Type	USINT
	Group	ZIP Parameters
	Units	—
	MinimumValue	0
	Maximum Value	64
	Default Value	64

Zone #3 MAC ID The node address of the device whose data is to be consumed for zone 3	Parameter Number	72
	Access Rule	GET/SET
	Data Type	USINT
	Group	ZIP Parameters
	Units	—
	MinimumValue	0
	Maximum Value	64
	Default Value	64

Zone #4 MAC ID The node address of the device whose data is to be consumed for zone 4	Parameter Number	73
	Access Rule	GET/SET
	Data Type	USINT
	Group	Misc. Option
	Units	—
	MinimumValue	0
	Maximum Value	64
	Default Value	64

Zone #1 Health Read Only consumed connection status for zone 1 0 = Healthy 1 = Unhealthy	Parameter Number	74
	Access Rule	GET
	Data Type	BOOL
	Group	ZIP Parameters
	Units	—
	MinimumValue	0
	Maximum Value	1
	Default Value	0

Zone #2 Health Read Only consumed connection status for zone 2 0 = Healthy 1 = Unhealthy	Parameter Number	75
	Access Rule	GET
	Data Type	BOOL
	Group	ZIP Parameters
	Units	—
	MinimumValue	0
	Maximum Value	1
	Default Value	0

Zone #3 Health Read Only consumed connection status for zone 3 0 = Healthy 1 = Unhealthy	Parameter Number	76
	Access Rule	GET
	Data Type	BOOL
	Group	ZIP Parameters
	Units	—
	MinimumValue	0
	Maximum Value	1
	Default Value	0

Zone #4 Health Read Only consumed connection status for zone 4 0 = Healthy 1 = Unhealthy	Parameter Number	77
	Access Rule	GET
	Data Type	BOOL
	Group	ZIP Parameters
	Units	—
	MinimumValue	0
	Maximum Value	1
	Default Value	0

Zone #1 Mask Bit enumerated consumed data mask for zone 1. Each bit represents a byte in consumed data up to 8 bytes in length. If a mask bit is set, the corresponding consumed data byte is placed in the DeviceLogix data table	Parameter Number	78
	Access Rule	GET/SET
	Data Type	BYTE
	Group	ZIP Parameters
	Units	—
	MinimumValue	0
	Maximum Value	255
	Default Value	0

Zone #2 Mask Bit enumerated consumed data mask for zone 2. Each bit represents a byte in consumed data up to 8 bytes in length. If a mask bit is set, the corresponding consumed data byte is placed in the DeviceLogix data table	Parameter Number	79
	Access Rule	GET/SET
	Data Type	BYTE
	Group	ZIP Parameters
	Units	—
	MinimumValue	0
	Maximum Value	255
	Default Value	0

Zone #3 Mask Bit enumerated consumed data mask for zone 3. Each bit represents a byte in consumed data up to 8 bytes in length. If a mask bit is set, the corresponding consumed data byte is placed in the DeviceLogix data table	Parameter Number	80
	Access Rule	GET/SET
	Data Type	BYTE
	Group	ZIP Parameters
	Units	—
	MinimumValue	0
	Maximum Value	255
	Default Value	0

Zone #4 Mask Bit enumerated consumed data mask for zone 4. Each bit represents a byte in consumed data up to 8 bytes in length. If a mask bit is set, the corresponding consumed data byte is placed in the DeviceLogix data table	Parameter Number	81
	Access Rule	GET/SET
	Data Type	BYTE
	Group	ZIP Parameters
	Units	—
	MinimumValue	0
	Maximum Value	255
	Default Value	0

Zone #1 Offset The byte offset into the ZIP data portion of the DeviceLogix data table to place the chosen consumed data bytes for zone 1.	Parameter Number	82
	Access Rule	GET/SET
	Data Type	UINT
	Group	ZIP Parameters
	Units	—
	MinimumValue	0
	Maximum Value	7
	Default Value	0

Zone #2 Offset The byte offset into the ZIP data portion of the DeviceLogix data table to place the chosen consumed data bytes for zone 2.	Parameter Number	83
	Access Rule	GET/SET
	Data Type	UNIT
	Group	ZIP Parameters
	Units	—
	MinimumValue	0
	Maximum Value	7
	Default Value	0

Zone #3 Offset The byte offset into the ZIP data portion of the DeviceLogix data table to place the chosen consumed data bytes for zone 3.	Parameter Number	84
	Access Rule	GET/SET
	Data Type	UNIT
	Group	ZIP Parameters
	Units	—
	MinimumValue	0
	Maximum Value	1
	Default Value	0

Zone #4 Offset The byte offset into the ZIP data portion of the DeviceLogix data table to place the chosen consumed data bytes for zone 4.	Parameter Number	85
	Access Rule	GET/SET
	Data Type	UNIT
	Group	ZIP Parameters
	Units	—
	MinimumValue	0
	Maximum Value	1
	Default Value	0

Zone #1 EPR The Expected Packet Rate in msec. for the zone 1 consuming connection. If consumed data is not received in 4 times this value, the zone connection will time out and “Zone #1 Health” will report 1 = Not Healthy.	Parameter Number	86
	Access Rule	GET/SET
	Data Type	UINT
	Group	ZIP Parameters
	Units	msec
	MinimumValue	0
	Maximum Value	65535
	Default Value	75

Zone #2 EPR The Expected Packet Rate in msec. for the zone 1 consuming connection. If consumed data is not received in 4 times this value, the zone connection will time out and “Zone #2 Health” will report 1 = Not Healthy.	Parameter Number	87
	Access Rule	GET/SET
	Data Type	UNIT
	Group	ZIP Parameters
	Units	msec
	MinimumValue	0
	Maximum Value	65535
	Default Value	75

Zone #3 EPR The Expected Packet Rate in msec. for the zone 1 consuming connection. If consumed data is not received in 4 times this value, the zone connection will time out and “Zone #3 Health” will report 1 = Not Healthy.	Parameter Number	88
	Access Rule	GET/SET
	Data Type	UNIT
	Group	ZIP Parameters
	Units	msec
	MinimumValue	0
	Maximum Value	65535
	Default Value	75

Zone #4 EPR The Expected Packet Rate in msec. for the zone 1 consuming connection. If consumed data is not received in 4 times this value, the zone connection will time out and “Zone #4 Health” will report 1 = Not Healthy.	Parameter Number	89
	Access Rule	GET/SET
	Data Type	UNIT
	Group	ZIP Parameters
	Units	msec
	MinimumValue	0
	Maximum Value	65535
	Default Value	75

Zone #1 Control Zone 1 Control Word. Default Bit 0 and Bit 1 set, all other bits clear. Bit0=Security Enable 1=Enable data security Bit1=COS Cnxn 1=Consume DNet Group 2 COS messages Bit2=Poll Cnxn 1=Consume DNet Group 2 Poll Response msgs. Bit3=Strobe Cnxn 1=Consume DNet Group 2 Strobe Response msgs. Bit4=Multicast Poll 1=Consume Multicast Poll Response messages.	Parameter Number	90
	Access Rule	GET/SET
	Data Type	BYTE
	Group	ZIP Parameters
	Units	—
	MinimumValue	0
	Maximum Value	255
	Default Value	3

Zone #2 Control	Parameter Number	91
Zone 2 Control Word. Default Bit 0 and Bit 1 set, all other bits clear. Bit0=Security Enable 1=Enable data security Bit1=COS Cnxn 1=Consume DNet Group 2 COS messages Bit2=Poll Cnxn 1=Consume DNet Group 2 Poll Response msgs. Bit3=Strobe Cnxn 1=Consume DNet Group 2 Strobe Response msgs. Bit4=Multicast Poll 1=Consume Multicast Poll Response messages	Access Rule	GET/SET
	Data Type	BYTE
	Group	ZIP Parameters
	Units	—
	MinimumValue	0
	Maximum Value	255
	Default Value	3

Zone #3 Control	Parameter Number	92
Zone 3 Control Word. Default Bit 0 and Bit 1 set, all other bits clear. Bit0=Security Enable 1=Enable data security Bit1=COS Cnxn 1=Consume DNet Group 2 COS messages Bit2=Poll Cnxn 1=Consume DNet Group 2 Poll Response msgs. Bit3=Strobe Cnxn 1=Consume DNet Group 2 Strobe Response msgs. Bit4=Multicast Poll 1=Consume Multicast Poll Response messages	Access Rule	GET/SET
	Data Type	BYTE
	Group	ZIP Parameters
	Units	—
	MinimumValue	0
	Maximum Value	255
	Default Value	3

Zone #4 Control	Parameter Number	93
Zone 3 Control Word. Default Bit 0 and Bit 1 set, all other bits clear. Bit0=Security Enable 1=Enable data security Bit1=COS Cnxn 1=Consume DNet Group 2 COS messages Bit2=Poll Cnxn 1=Consume DNet Group 2 Poll Response msgs. Bit3=Strobe Cnxn 1=Consume DNet Group 2 Strobe Response msgs. Bit4=Multicast Poll 1=Consume Multicast Poll Response messages	Access Rule	GET/SET
	Data Type	BYTE
	Group	ZIP Parameters
	Units	—
	MinimumValue	0
	Maximum Value	255
	Default Value	3

Zone #1 Key When the “Security Enable” bit for zone 1 is enabled, this value must match the value of the Device Value Key parameter in the device whose data is being consumed for zone 1.	Parameter Number	94
	Access Rule	GET/SET
	Data Type	UINT
	Group	ZIP Parameters
	Units	—
	MinimumValue	0
	Maximum Value	65535
	Default Value	0

Zone #2 Key When the “Security Enable” bit for zone 2 is enabled, this value must match the value of the Device Value Key parameter in the device whose data is being consumed for zone 2.	Parameter Number	95
	Access Rule	GET/SET
	Data Type	UINT
	Group	ZIP Parameters
	Units	—
	MinimumValue	0
	Maximum Value	65535
	Default Value	0

Zone #3 Key When the “Security Enable” bit for zone 3 is enabled, this value must match the value of the Device Value Key parameter in the device whose data is being consumed for zone 3.	Parameter Number	96
	Access Rule	GET/SET
	Data Type	UINT
	Group	ZIP Parameters
	Units	—
	MinimumValue	0
	Maximum Value	65535
	Default Value	0

Zone #4 KEY When the “Security Enable” bit for zone 4 is enabled, this value must match the value of the Device Value Key parameter in the device whose data is being consumed for zone 4	Parameter Number	97
	Access Rule	GET/SET
	Data Type	UINT
	Group	ZIP Parameters
	Units	—
	MinimumValue	0
	Maximum Value	65535
	Default Value	0

Device Value Key This value is produced in the last 2 bytes of data when one of the ZIP assemblies is chosen for data production.	Parameter Number	98
	Access Rule	GET/SET
	Data Type	UINT
	Group	ZIP Parameters
	Units	—
	MinimumValue	0
	Maximum Value	65535
	Default Value	0

Zone Ctrl Enable Global enable for ZIP peer-to-peer messaging. This parameter must be disabled before any changes to the ZIP configuration for the device can be made. 0=Disable 1=Enable	Parameter Number	99
	Access Rule	GET/SET
	Data Type	BOOL
	Group	ZIP Parameters
	Units	—
	MinimumValue	0
	Maximum Value	1
	Default Value	0

Starter Display

Phase A Current This parameter provides the current of Phase A measured n increments of 1/10th of an ampere	Parameter Number	101
	Access Rule	GET/SET
	Data Type	INT
	Group	Starter Display
	Units	xx.x Amps
	Minimum Value	0
	Maximum Value	32767
	Default Value	0

Phase B Current This parameter provides the current of Phase B measured in increments of 1/10th of an ampere	Parameter Number	102
	Access Rule	GET/SET
	Data Type	INT
	Group	Starter Display
	Units	xx.x Amps
	Minimum Value	0
	Maximum Value	32767
	Default Value	0

Phase C Current This parameter provides the current of Phase C measured in increments of 1/10th of an ampere	Parameter Number	103
	Access Rule	GET/SET
	Data Type	INT
	Group	Starter Display
	Units	xx.x Amps
	Minimum Value	0
	Maximum Value	32767
	Default Value	0

Average Current This parameter provides the average current measured in increments of 1/10th of an ampere	Parameter Number	104
	Access Rule	GET/SET
	Data Type	INT
	Group	Starter Display
	Units	xx.x Amps
	Minimum Value	0
	Maximum Value	32767
	Default Value	0

% Therm Utilized	Parameter Number	105
This parameter displays the % Thermal Capacity used	Access Rule	GET/SET
	Data Type	USINT
	Group	Starter Display
	Units	% FLA
	Minimum Value	0
	Maximum Value	100
	Default Value	0

Starter Setup

FLA Setting	Parameter Number	106
The motor's full load current rating is programmed in this parameter	Access Rule	GET/SET
	Data Type	INT
	Group	Starter Setup
	Units	xx.x Amps
	Minimum Value	See Table 3.2
	Maximum Value	See Table 3.2
	Default Value	See Table 3.2

Table 3.2 FLA Setting Ranges and Default Values (with indicated setting precision)

FLA Current Range (A)		Default Value
Minimum Value	Maximum Value	
0.24	1.2	0.24
0.5	2.5	0.5
1.1	5.5	1.1
3.2	16.0	3.2

Overload Class	Parameter Number	107
This parameter allows the installer to select the overload class	Access Rule	GET/SET
	Data Type	USINT
	Group	Starter Setup
	Units	xx.x Amps
1= Overload Class 10 2= Overload Class 15 3= Overload Class 20	Minimum Value	1
	Maximum Value	3
	Default Value	1

OL Reset Level	Parameter Number	108
This parameter allows the installer select the % Thermal Capacity which an overload can be cleared	Access Rule	GET/SET
	Data Type	USINT
	Group	Starter Setup
	Units	% FLA
	Minimum Value	0
	Maximum Value	100
	Default Value	75

Notes

Bulletin 284 Programmable Parameters for Sensorless Vector Controllers

This chapter describes each programmable parameter and its function for Bulletin 284 Sensorless Vector Controllers.

Parameter Programming

Each Distributed Motor Controller type will have a common set of parameters followed by a set of parameters that pertain to the individual starter type.

Refer to *Chapter 6, DeviceNet™ Commissioning*, for instructions in using RSNetworx™ for DeviceNet™ to modify parameter settings.

Important: Resetting the Factory Default Values Parameter 47, *Set to Defaults*, allows the installer to reset all parameter to the factory default values. It also resets the MAC ID to its factory default after DeviceNet Power is cycled if switches are set >63.

Important: Parameter setting changes downloaded to the ArmorStart® take effect immediately, even during a running status.

Important: Parameter setting changes made in a configuration tool such as RSNetworx™ for DeviceNet do not take effect in the ArmorStart until the installer applies or downloads the new settings to the device.

Parameter Group Listing

The Bulletin 284D ArmorStart contains ten parameter groups. The parameters shown in the DeviceLogix™, DeviceNet , Starter Protection , User I/O , Misc. Parameter , Drive DeviceNet , Display Group, Basic Program, and Advanced Program will be discussed in this chapter.

Table 4.1 Paramerer Group Listing

DeviceLogix	DeviceNet	Starter Protection	User I/O	Miscellaneous	Drive DeviceNet
1 Hdw Inputs	**10** Autobaud Enable	**22** Breaker Type	**30** Off-to-On Delay	**45** Keypad Mode	**48** Drive Control
2 Network Inputs	**11** Consumed IO Assy	**23** PrFltResetMode	**31** On-to-Off Delay	**46** Keypad Disable	**49** Drvin PrFltState
3 Network Outputs	**12** Produced IO Assy	**24** Pr Fault Enable	**32** In Sink/Source	**47** Set To Defaults	**50** Drvin PrFltValue
4 Trip Status	**13** Prod Assy Word 0	**25** Pr Fault Reset	**33** OutA Pr FltState	**56** Base Enclosure	**51** Drvin DNFltState
5 Starter Status	**14** Prod Assy Word 1	**26** StrtrDN FltState	**34** OutA Pr FltValue	**57** Base Options	**52** Drvin DNFltValue
6 DNet Status	**15** Prod Assy Word 2	**27** StrtrDN FltValue	**35** OutA DN FltState	**58** Wiring Options	**53** Drvin DNFltState
7 Starter Command	**16** Prod Assy Word 3	**28** StrtrDN IdlState	**36** OutA DN FltValue	**59** Starter Enclosure	**54** Drvin DNFltValue
8 Network Override	**17** Consumed IO Size	**29** StrtrDN IdlValue	**37** OutA DN IdlState	**60** Starter Options	**55** High Speed Enable
9 Comm Override	**18** Produced IO Size	**61** RAST Pr Fault	**38** OutA DN IdlValue		
	19 Starter COS Mask	**62** Warning Status	**39** OutB Pr FltState		
	20 Net Out COS Mask		**40** OutB Pr FltValue		
	21 DNet Voltage		**41** OutB DN FltState		
			42 OutB DN FltValue		
			43 OutB DN IdlState		
			44 OutB DN IdlValue		
Display Group	**ZIP Parameters**	**Basic Setup**	**Advanced Setup**		
101 Output Freq	**67** AutoRun Zip	**131** Motor NP Volts	**151** Digital In1 Sel	**189** Current Limit 1	**227** Autotune
102 Commanded Freq	**68** Zone Produced EPR	**132** Motor NP Hertz	**152** Digital In2 Sel	**190** Motor OL Select	**228** IR Voltage Drop
103 Output Current	**69** Zone Produced PIT	**133** Motor OL Current	**153** Digital In3 Sel	**191** PWM Frequency	**229** Flux Current Ref
104 Output Voltage	**70** Zone #1 MacId	**134** Minimum Freq	**154** Digital In4 Sel	**192** Auto Rstrt Tries	**230** PID Trim Hi
105 DC Bus Voltage	**71** Zone #2 MacId	**135** Maximum Freq	**155** Relay Out Sel	**193** Auto Rstrt Delay	**231** PID Trim Lo
106 Drive Status	**72** Zone #3 MacId	**136** Start Source	**156** Relay Out Level	**194** Start At PowerUp	232 PID Ref Sel
107 Fault 1 Code	**73** Zone #4 MacId	**137** Stop Mode	**157** Relay Out LevelF	**195** Reverse Disable	**233** PID Feedback Sel
108 Fault 2 Code	**74** Zone #1 Health	**138** Speed Reference	**158** Opto Out1 Sel	**196** Flying Start En	**234** PID Prop Gain
109 Fault 3 Code	**75** Zone #2 Health	**139** Accel Time 1	**159** Opto Out1 Level	**197** Compensation	**235** PID Integ Time
110 Process Display	**76** Zone #3 Health	**140** Decel Time 1	**160** Opto Out1 LevelF	**198** SW Current Trip	**236** PID Diff Rate
112 Control Source	**77** Zone #4 Health	**141** Reset To Defalts	**161** Opto Out2 Sel	**199** Process Factor	**237** PID Setpoint
113 Contrl In Status	**78** Zone #1 Mask	**142** Reserved	**162** Opto Out2 Level	**200** Fault Clear	**238** PID Deadband
114 Dig In Status	**79** Zone #2 Mask	**143** Motor OL Ret	**163** DB Threshold	**201** Program Lock	**239** PID Preload
115 Comm Status	**80** Zone #3 Mask		**164** Opto Out Logic	**202** Testpoint Sel	**240** Stp Logic 0
116 Control SW Ver	**81** Zone #4 Mask		**165** Analog Out Sel	203 Comm Data Rate	**241** Stp Logic 1
117 Drive Type	**82** Zone #1 Offset		**166** Analog Out High	**204** Comm Node Addr	**242** Stp Logic 2
118 Elapsed Run Time	**83** Zone #2 Offset		**167** Accel Time 2	**205** Comm Loss Action	**243** Stp Logic 3
119 Testpoint Data	**84** Zone #3 Offset		**168** Decel Time 2	**206** Comm Loss Time	**244** Stp Logic 4
120 Analog In 0…10V	**85** Zone #4 Offset		**169** Internal Freq	**207** Comm Format	**245** Stp Logic 5
121 Analog In 4…20 mA	**86** Zone #1 EPR		**170** Preset Freq 0	**208** Language	**246** Stp Logic 6
122 Output Power	**87** Zone #2 EPR		**171** Preset Freq 1	**209** Anlg Out Setpt	**247** Stp Logic 7
123 Output Power Fctr	**88** Zone #3 EPR		**172** Preset Freq 2	**210** Anlg In 0…10V Lo	**248** Reserved
124 Drive Temp	**89** Zone #4 EPR		**173** Preset Freq 3	**211** Anlg In 0…10V Hi	**249** Reserved
125 Counter Status	**90** Zone #1 Control		**174** Preset Freq 4	**212** Anlg In 4…20 mA Lo	**250** Stp Logic Time 0
126 Timer Status	**91** Zone #2 Control		**175** Preset Freq 5	**213** Anlg In4…20 mA Hi	**251** Stp Logic Time 1
127 Timer Stat Fract	**92** Zone #3 Control		**176** Preset Freq 6	**214** Slip Hertz @ FLA	**252** Stp Logic Time 2
128 Stp Logic Status	**93** Zone #4 Control		**177** Preset Freq 7	**215** Process Time Lo	**253** Stp Logic Time 3
129 Torque Current	**94** Zone #1 Key		**178** Jog Frequency	**216** Process Time Hi	**254** Stp Logic Time 4
	95 Zone #2 Key		**179** Jog Accel/Decel	**217** Bus Reg Mode	**255** Stp Logic Time 5
	96 Zone #3 Key		**180** DC Brake Time	**218** Current Limit 2	**256** Stp Logic Time 6
	97 Zone #4 Key		**181** DC Brake Level	**219** Skip Frequency	**257** Stp Logic Time 7
	98 Device Value Key		**182** DB Resistor Sel	**220** Skip Freq Band	**258** Reserved
	99 Zone Ctrl Enable		**183** S Curve %	**221** Stall Fault Time	**259** Reserved
			184 Boost Select	**222** Analog In Loss	**260** EM Brk Off Delay
			185 Start Boost	**223** 10V Bipolar Enbl	**261** EM Brk On Delay
			186 Break Voltage	**224** Var PWM Disable	**262** MOP Reset Sel
			187 Break Frequency	**225** Torque Perf Mode	
			188 Maximum Voltage	**226** Motor NP FLA	

DeviceLogix Group

Hdw Inputs This parameter provides status of hardware inputs.	Parameter Number	1
	Access Rule	GET
	Data Type	WORD
	Group	DeviceLogix
	Units	—
	Minimum Value	0
	Maximum Value	15
	Default Value	0

Bit				Function
3	2	1	0	
—	—	—	X	Input 0
—	—	X	—	Input 1
—	X	—	—	Input 2
X	—	—	—	Input 3

Network Inputs This parameter provides status of network inputs.	Parameter Number	2
	Access Rule	GET
	Data Type	WORD
	Group	DeviceLogix
	Units	—
	Minimum Value	0
	Maximum Value	65535
	Default Value	0

Bit																Function
15	14	13	12	11	10	9	8	7	6	5	4	3	2	1	0	
—	—	—	—	—	—	—	—	—	—	—	—	—	—	—	X	Net Input 0
—	—	—	—	—	—	—	—	—	—	—	—	—	—	X	—	Net Input 1
—	—	—	—	—	—	—	—	—	—	—	—	—	X	—	—	Net input 2
—	—	—	—	—	—	—	—	—	—	—	—	X	—	—	—	Net Input 3
—	—	—	—	—	—	—	—	—	—	—	X	—	—	—	—	Net Input 4
—	—	—	—	—	—	—	—	—	—	X	—	—	—	—	—	Net Input 5
—	—	—	—	—	—	—	—	—	X	—	—	—	—	—	—	Net Input 6
—	—	—	—	—	—	—	—	X	—	—	—	—	—	—	—	Net Input 7
—	—	—	—	—	—	—	X	—	—	—	—	—	—	—	—	Net Input 8
—	—	—	—	—	—	X	—	—	—	—	—	—	—	—	—	Net Input 9
—	—	—	—	—	X	—	—	—	—	—	—	—	—	—	—	Net Input 10
—	—	—	—	X	—	—	—	—	—	—	—	—	—	—	—	Net Input 11
—	—	—	X	—	—	—	—	—	—	—	—	—	—	—	—	Net Input 12
—	—	X	—	—	—	—	—	—	—	—	—	—	—	—	—	Net Input 13
—	X	—	—	—	—	—	—	—	—	—	—	—	—	—	—	Net Input 14
X	—	—	—	—	—	—	—	—	—	—	—	—	—	—	—	Net Input 15

Network Outputs
This parameter provides status of network outputs.

Parameter Number	3
Access Rule	GET
Data Type	WORD
Group	DeviceLogix
Units	—
Minimum Value	0
Maximum Value	32767
Default Value	0

Bit															Function
14	13	12	11	10	9	8	7	6	5	4	3	2	1	0	
—	—	—	—	—	—	—	—	—	—	—	—	—	—	X	Net Output 0
—	—	—	—	—	—	—	—	—	—	—	—	—	X	—	Net Output 1
—	—	—	—	—	—	—	—	—	—	—	—	X	—	—	Net Output 2
—	—	—	—	—	—	—	—	—	—	—	X	—	—	—	Net Output 3
—	—	—	—	—	—	—	—	—	—	X	—	—	—	—	Net Output 4
—	—	—	—	—	—	—	—	—	X	—	—	—	—	—	Net Output 5
—	—	—	—	—	—	—	—	X	—	—	—	—	—	—	Net Output 6
—	—	—	—	—	—	—	X	—	—	—	—	—	—	—	Net Output 7
—	—	—	—	—	—	X	—	—	—	—	—	—	—	—	Net Output 8
—	—	—	—	—	X	—	—	—	—	—	—	—	—	—	Net Output 9
—	—	—	—	X	—	—	—	—	—	—	—	—	—	—	Net Output 10
—	—	—	X	—	—	—	—	—	—	—	—	—	—	—	Net Output 11
—	—	X	—	—	—	—	—	—	—	—	—	—	—	—	Net Output 12
—	X	—	—	—	—	—	—	—	—	—	—	—	—	—	Net Output 13
X	—	—	—	—	—	—	—	—	—	—	—	—	—	—	Net Output 14

Trip Status
This parameter provides trip identification.

Parameter Number	4
Access Rule	GET
Data Type	WORD
Group	DeviceLogix
Units	—
Minimum Value	0
Maximum Value	65535
Default Value	0

Bit																Function
15	14	13	12	11	10	9	8	7	6	5	4	3	2	1	0	
—	—	—	—	—	—	—	—	—	—	—	—	—	—	—	X	Short Circuit
—	—	—	—	—	—	—	—	—	—	—	—	—	—	X	—	Overload
—	—	—	—	—	—	—	—	—	—	—	—	—	X	—	—	Phase Short
—	—	—	—	—	—	—	—	—	—	—	—	X	—	—	—	Ground Fault
—	—	—	—	—	—	—	—	—	—	—	X	—	—	—	—	Stall
—	—	—	—	—	—	—	—	—	—	X	—	—	—	—	—	Control Power
—	—	—	—	—	—	—	—	—	X	—	—	—	—	—	—	IO Fault
—	—	—	—	—	—	—		X	—	—	—	—	—	—	—	Overtemperature
—	—	—	—	—	—	—	X	—	—	—	—	—	—	—	—	Over Current
—	—	—	—	—	—	X	—	—	—	—	—	—	—	—	—	Dnet Power Loss
—	—	—	—	—	X	—	—	—	—	—	—	—	—	—	—	Internal Comm ❶
—	—	—	—	X	—	—	—	—	—	—	—	—	—	—	—	DC Bus Fault
—	—	—	X	—	—	—	—	—	—	—	—	—	—	—	—	EEprom
—	—	X	—	—	—	—	—	—	—	—	—	—	—	—	—	HW Fault
—	X	—	—	—	—	—	—	—	—	—	—	—	—	—	—	Restart Retries
X	—	—	—	—	—	—	—	—	—	—	—	—	—	—	—	Misc. Fault

❶ Indicates DB1 Comm Fault for Bulletin 284.

Starter Status
This parameter provides the status of the starter.

Parameter Number	5
Access Rule	GET
Data Type	WORD
Group	DeviceLogix
Units	—
Minimum Value	0
Maximum Value	65535
Default Value	0

Bit																Function
15	14	13	12	11	10	9	8	7	6	5	4	3	2	1	0	
—	—	—	—	—	—	—	—	—	—	—	—	—	—	—	X	Tripped
—	—	—	—	—	—	—	—	—	—	—	—	—	—	X	—	Warning
—	—	—	—	—	—	—	—	—	—	—	—	—	X	—	—	Running Fwd
—	—	—	—	—	—	—	—	—	—	—	—	X	—	—	—	Running Rev
—	—	—	—	—	—	—	—	—	—	—	X	—	—	—	—	Ready
—	—	—	—	—	—	—	—	—	—	X	—	—	—	—	—	Net Ctl Status
—	—	—	—	—	—	—	—	—	X	—	—	—	—	—	—	Net Ref Status
—	—	—	—	—	—	—	—	X	—	—	—	—	—	—	—	At Reference
—	—	—	—	—	—	—	X	—	—	—	—	—	—	—	—	DrvOpto1
—	—	—	—	—	—	X	—	—	—	—	—	—	—	—	—	DrvOpto2
—	—	—	—	—	X	—	—	—	—	—	—	—	—	—	—	Keypad Jog
—	—	—	—	X	—	—	—	—	—	—	—	—	—	—	—	Keypad Hand
—	—	—	X	—	—	—	—	—	—	—	—	—	—	—	—	HOA Status
—	—	X	—	—	—	—	—	—	—	—	—	—	—	—	—	140M On
—	X	—	—	—	—	—	—	—	—	—	—	—	—	—	—	Contactor 1 ❶
X	—	—	—	—	—	—	—	—	—	—	—	—	—	—	—	Contactor 2 ❷

❶ Refers to Source Brake contactor status.
❷ Refers to Output contactor status.

Dnet Status This parameter provides status of the DeviceNet connection.	Parameter Number	6
	Access Rule	GET
	Data Type	WORD
	Group	DeviceLogix
	Units	—
	Minimum Value	0
	Maximum Value	31
	Default Value	0

Bit																Function
15	14	13	12	11	10	9	8	7	6	5	4	3	2	1	0	
—	—	—	—	—	—	—	—	—	—	—	—	—	—	—	X	Exp Cnxn
—	—	—	—	—	—	—	—	—	—	—	—	—	—	X	—	IO Cnxn
—	—	—	—	—	—	—	—	—	—	—	—	—	X	—	—	Exp Flt
—	—	—	—	—	—	—	—	—	—	—	—	X	—	—	—	IO Flt
—	—	—	—	—	—	—	—	—	—	—	X	—	—	—	—	IO Idle
—	—	—	—	—	—	—	—	X	X	X	—	—	—	—	—	Reserved
—	—	—	—	—	—	—	X	—	—	—	—	—	—	—	—	ZIP 1 Cnxn
—	—	—	—	—	—	X	—	—	—	—	—	—	—	—	—	ZIP 1 Flt
—	—	—	—	—	X	—	—	—	—	—	—	—	—	—	—	ZIP 2 Cnxn
—	—	—	—	X	—	—	—	—	—	—	—	—	—	—	—	ZIP 2 Flt
—	—	—	X	—	—	—	—	—	—	—	—	—	—	—	—	ZIP 3 Cnxn
—	—	X	—	—	—	—	—	—	—	—	—	—	—	—	—	ZIP 3 Flt
—	X	—	—	—	—	—	—	—	—	—	—	—	—	—	—	ZIP 4 Cnxn
X	—	—	—	—	—	—	—	—	—	—	—	—	—	—	—	ZIP 4 Flt

Starter Command This parameter provides the command the starter.	Parameter Number	7
	Access Rule	GET/SET
	Data Type	WORD
	Group	DeviceLogix
	Units	—
	Minimum Value	0
	Maximum Value	255
	Default Value	0

Bit								Function
7	6	5	4	3	2	1	0	
—	—	—	—	—	—	—	X	Run Fwd
—	—	—	—	—	—	X	—	Run Rev
—	—	—	—	—	X	—	—	Fault Reset
—	—	—	—	X	—	—	—	Jog Fwd
—	—	—	X	—	—	—	—	Jog Rev
—	—	X	—	—	—	—	—	Reserved
—	X	—	—	—	—	—	—	User Out A
X	—	—	—	—	—	—	—	User Out B

Network Override This parameter allows for the local logic to override a Network fault. 0 = Disable 1 = Enable	Parameter Number	8
	Access Rule	GET/SET
	Data Type	BOOL
	Group	DeviceLogix
	Units	—
	Minimum Value	0
	Maximum Value	1
	Default Value	0

Comm Override This parameter allows for local logic to override a loss of an I/O connection. 0 = Disable 1 = Enable	Parameter Number	9
	Access Rule	GET/SET
	Data Type	BOOL
	Group	DeviceLogix
	Units	—
	Minimum Value	0
	Maximum Value	1
	Default Value	0

DeviceNet Group

Autobaud Enable When this parameter is enabled, the device will attempt to determine the network baud rate and set its baud rate to the same, provided network traffic exists. At least one node with an established baud rate must exist on the network for autobaud to occur. 0 = Disable 1 = Enable	Parameter Number	10
	Access Rule	GET/SET
	Data Type	BOOL
	Group	DeviceNet
	Units	—
	Minimum Value	0
	Maximum Value	1
	Default Value	1

Consumed I/O Assy This parameter selects the format of the I/O data consumed	Parameter Number	11
	Access Rule	GET/SET
	Data Type	USINT
	Group	DeviceNet
	Units	—
	Minimum Value	0
	Maximum Value	188
	Default Value	164

Produced I/O Assy This parameter selects the format of the I/O data produced.	Parameter Number	12
	Access Rule	GET/SET
	Data Type	USINT
	Group	DeviceNet
	Units	—
	Minimum Value	0
	Maximum Value	190
	Default Value	165

Prod Assy Word 0 This parameter is used to build bytes 0-1 for produced assembly 120.	Parameter Number	13
	Access Rule	GET/SET
	Data Type	USINT
	Group	DeviceNet
	Units	—
	Minimum Value	0
	Maximum Value	262
	Default Value	1

Produced Assy Word 1 This parameter is used to build bytes 2-3 for produced assembly 120	Parameter Number	14
	Access Rule	GET/SET
	Data Type	USINT
	Group	DeviceNet
	Units	—
	Minimum Value	0
	Maximum Value	262
	Default Value	4

Prod Assy Word 2 This parameter is used to build bytes 4-5 for produced assembly 120.	Parameter Number	15
	Access Rule	GET/SET
	Data Type	USINT
	Group	DeviceNet
	Units	—
	Minimum Value	0
	Maximum Value	262
	Default Value	5

Prod Assy Word 3 This parameter is used to build bytes 6-7 for produced assembly 120.	Parameter Number	16
	Access Rule	GET/SET
	Data Type	USINT
	Group	DeviceNet
	Units	—
	Minimum Value	0
	Maximum Value	262
	Default Value	6

Consumer I/O Size This parameter maps to the Scanner Tx Size.	Parameter Number	17
	Access Rule	GET
	Data Type	USINT
	Group	DeviceNet
	Units	—
	Minimum Value	0
	Maximum Value	8
	Default Value	4

Produced I/O Size This parameter maps to the Scanners Rx Size.	Parameter Number	18
	Access Rule	GET
	Data Type	USINT
	Group	DeviceNet
	Units	—
	Minimum Value	0
	Maximum Value	8
	Default Value	4

Starter COS Mask This parameter allows the installer to define the change-of-state conditions that will result in a change-of-state message being produced.	Parameter Number	19
	Access Rule	GET/SET
	Data Type	WORD
	Group	DeviceNet
	Units	—
	Minimum Value	0
	Maximum Value	16383
	Default Value	16383

Bit														Function
13	**12**	**11**	**10**	**9**	**8**	**7**	**6**	**5**	**4**	**3**	**2**	**1**	**0**	
—	—	—	—	—	—	—	—	—	—	—	—	—	X	Tripped
—	—	—	—	—	—	—	—	—	—	—	—	X	—	Warning
—	—	—	—	—	—	—	—	—	—	—	X	—	—	Running Fwd
—	—	—	—	—	—	—	—	—	—	X	—	—	—	Running Rev
—	—	—	—	—	—	—	—	—	X	—	—	—	—	Ready
—	—	—	—	—	—	—	—	X	—	—	—	—	—	Net Ctl Status
—	—	—	—	—	—	—	X	—	—	—	—	—	—	Net Ref Status
—	—	—	—	—	—	X	—	—	—	—	—	—	—	At Reference
—	—	—	—	—	X	—	—	—	—	—	—	—	—	User Input 1
—	—	—	—	X	—	—	—	—	—	—	—	—	—	User Input 2
—	—	—	X	—	—	—	—	—	—	—	—	—	—	User Input 3
—	—	X	—	—	—	—	—	—	—	—	—	—	—	User Input 4
—	X	—	—	—	—	—	—	—	—	—	—	—	—	HOA Status
X	—	—	—	—	—	—	—	—	—	—	—	—	—	140M On

Net Out COS Mask This parameter sets the bit that will trigger a COS message on the network output.	Parameter Number	20
	Access Rule	GET/SET
	Data Type	WORD
	Group	DeviceNet
	Units	—
	Minimum Value	0
	Maximum Value	32767
	Default Value	0

Bit															Function
14	13	12	11	10	9	8	7	6	5	4	3	2	1	0	
—	—	—	—	—	—	—	—	—	—	—	—	—	—	X	Net Output 0
—	—	—	—	—	—	—	—	—	—	—	—	—	X	—	Net Output 1
—	—	—	—	—	—	—	—	—	—	—	—	X	—	—	Net Output 2
—	—	—	—	—	—	—	—	—	—	—	X	—	—	—	Net Output 3
—	—	—	—	—	—	—	—	—	—	X	—	—	—	—	Net Output 4
—	—	—	—	—	—	—	—	—	X	—	—	—	—	—	Net Output 5
—	—	—	—	—	—	—	—	X	—	—	—	—	—	—	Net Output 6
—	—	—	—	—	—	—	X	—	—	—	—	—	—	—	Net Output 7
—	—	—	—	—	—	X	—	—	—	—	—	—	—	—	Net Output 8
—	—	—	—	—	X	—	—	—	—	—	—	—	—	—	Net Output 9
—	—	—	—	X	—	—	—	—	—	—	—	—	—	—	Net Output 10
—	—	—	X	—	—	—	—	—	—	—	—	—	—	—	Net Output 11
—	—	X	—	—	—	—	—	—	—	—	—	—	—	—	Net Output 12
—	X	—	—	—	—	—	—	—	—	—	—	—	—	—	Net Output 13
X	—	—	—	—	—	—	—	—	—	—	—	—	—	—	Net Output 14

Dnet Voltage This parameter provides the voltage measurement for the DeviceNet network.	Parameter Number	21
	Access Rule	GET
	Data Type	UINT
	Group	DeviceNet
	Units	V
	Minimum Value	0
	Maximum Value	6500
	Default Value	0

Starter Protection Group

Breaker Type This parameter identifies the Bulletin 140M used in this product. 0 = 140M-D8N-C10 1 = 140M-D8N-C25	Parameter Number	22
	Access Rule	GET
	Data Type	BOOL
	Group	Starter Protection
	Units	—
	Minimum Value	0
	Maximum Value	1
	Default Value	—

PrFlt Reset Mode This parameter is the Protection Fault reset mode. 0 = Manual 1 = Automatic	Parameter Number	23
	Access Rule	GET/SET
	Data Type	BOOL
	Group	Starter Protection
	Units	—
	Minimum Value	0
	Maximum Value	1
	Default Value	0

Pr Fault Enable This parameter enables the Protection Fault by setting the bit to 1.	Parameter Number	24
	Access Rule	GET/SET
	Data Type	WORD
	Group	Starter Protection
	Units	—
	Minimum Value	0
	Maximum Value	65535
	Default Value	64927

Bit																Function
15	14	13	12	11	10	9	8	7	6	5	4	3	2	1	0	
—	—	—	—	—	—	—	—	—	—	—	—	—	—	—	X	Short Circuit
—	—	—	—	—	—	—	—	—	—	—	—	—	—	X	—	Overload
—	—	—	—	—	—	—	—	—	—	—	—	—	X	—	—	Phase Short
—	—	—	—	—	—	—	—	—	—	—	—	X	—	—	—	Ground Fault
—	—	—	—	—	—	—	—	—	—	—	X	—	—	—	—	Stall
—	—	—	—	—	—	—	—	—	—	X	—	—	—	—	—	Control Power
—	—	—	—	—	—	—	—	—	X	—	—	—	—	—	—	IO Fault
—	—	—	—	—	—	—	—	X	—	—	—	—	—	—	—	Overtemperature
—	—	—	—	—	—	—	X	—	—	—	—	—	—	—	—	Over Current
—	—	—	—	—	—	X	—	—	—	—	—	—	—	—	—	Dnet Power Loss
—	—	—	—	—	X	—	—	—	—	—	—	—	—	—	—	Internal Comm
—	—	—	—	X	—	—	—	—	—	—	—	—	—	—	—	DC Bus Fault
—	—	—	X	—	—	—	—	—	—	—	—	—	—	—	—	EEprom
—	—	X	—	—	—	—	—	—	—	—	—	—	—	—	—	HW Fault
—	X	—	—	—	—	—	—	—	—	—	—	—	—	—	—	Restart Retries
X	—	—	—	—	—	—	—	—	—	—	—	—	—	—	—	Misc. Fault

Pr Fault Reset This parameter resets the Protection Fault on a transition 0 > 1.	Parameter Number	25
	Access Rule	GET/SET
	Data Type	BOOL
	Group	Starter Protection
	Units	—
	Minimum Value	0
	Maximum Value	1
	Default Value	0

StrtrDN FltState This parameter in conjunction with Parameter 27 defines how the starter will respond when a DeviceNet fault occurs. When set to 1, hold to last state occurs. When set to 0, will go to DnFlt Value on DN faults as determined by Parameter 27.	Parameter Number	26
	Access Rule	GET/SET
	Data Type	BOOL
	Group	Starter Protection
	Units	—
	Minimum Value	0
	Maximum Value	1
	Default Value	0

StrtrDN FltValue This parameter determines if the starter will be commanded in the event of a DevceNet fault. 0 = OFF 1 = ON	Parameter Number	27
	Access Rule	GET/SET
	Data Type	BOOL
	Group	Starter Protection
	Units	—
	Minimum Value	0
	Maximum Value	1
	Default Value	0

StrtrDN IdlState This parameter in conjunction with Parameter 29 defines how the starter will respond when a DeviceNet network is idle. When set to 1, hold to last state occurs. When set to 0, will go to DnFlt Value on DN faults as determined by Parameter 29. 0 = Go to Idle Value 1 = Hold Last State	Parameter Number	28
	Access Rule	GET/SET
	Data Type	BOOL
	Group	Starter Protection
	Units	—
	Minimum Value	0
	Maximum Value	1
	Default Value	0

StrtrDN IdlValue This parameter determines the state that starter assumes when the network is idle and Parameter 28 is set to 0. 0 = OFF 1 = ON	Parameter Number	29
	Access Rule	GET/SET
	Data Type	BOOL
	Group	Starter Protection
	Units	—
	Minimum Value	0
	Maximum Value	1
	Default Value	0

Last PR Fault 1 =Hdw Short Ckt 2 = Reserved 3 =Motor Overload (PF Fault Code 7) 4 =Drive Overload (PF Fault Code 64) 5 = Phase U to Gnd (PF Fault Code 38) 6 = Phase V to Gnd (PF Fault Code 39) 7 = Phase W to Gnd (PF Fault Code 40) 8 = Phase UV Short (PF4 Fault Code 41) 9 = Phase UW Short (PF Fault Code 42) 10 = Phase VW Short (PF Fault Code 43) 11 = Ground Fault (PF Fault Code 13) 12 = Stall (PF Fault Code 6) 13 = Control Pwr Loss 14 = Control Pwr Fuse 15 = Input Short 16 = Output Fuse 17 = Over Temp 18 = Heatsink OvrTmp (PF Fault Code 8) 19 = HW OverCurrent (PF Fault Code 12) 20 = SW OverCurrent (PF Fault Code 63) 21 = DNet Power Loss 22 = Internal Comm 23 = Drive Comm Loss (PF Fault Code 81) 24 = Power Loss (PF Fault Code 3) 25 = Under Voltage (PF Fault Code 4) 26 = Over Voltage (PF Fault Code 5) 27 = MCB EEPROM 28 = Base EEPROM 29 =Drive EEPROM (PF Fault Code 100) 30 = Wrong Base 31 = Fan RPM 32 = Power Unit (PF Fault Code 70) 33 = Drive IO Brd (PF Fault Code122) 34 = Restart Retries (PF Fault Code 33) 35 = Drive Aux In Flt (PF Fault Code 2) 36 = Analog Input (PF Fault Code 29) 37 = Drv Param Reset (PF Fault Code 48) 38 = SCV Autotune (PF Fault Code 80) 39 = Source Brake 40 = Reserved 41 = DB1 Comm 42 = DB1 Fault	Parameter Number	61
	Access Rule	GET
	Data Type	UINT
	Group	Starter Protection
	Units	—
	Minimum Value	0
	Maximum Value	45
	Default Value	0

Warning Status This parameter warns the user of a condition, without faulting	Parameter Number	62
	Access Rule	GET
	Data Type	WORD
	Group	Starter Protection
	Units	—
	Minimum Value	0
	Maximum Value	65535
	Default Value	0

User I/O Group

Off-to-On Delay This parameter allows the installer to program a time duration before being reported ON.	Parameter Number	30
	Access Rule	GET/SET
	Data Type	UINT
	Group	User I/O
	Units	ms
	Minimum Value	0
	Maximum Value	65.000
	Default Value	0

On-to-Off Delay This parameter allows the installer to program a time duration before being reported OFF.	Parameter Number	31
	Access Rule	GET/SET
	Data Type	UINT
	Group	User I/O
	Units	ms
	Minimum Value	0
	Maximum Value	65.000
	Default Value	0

In Sink/Source This parameter allows the installer to program the inputs to be sink or source. 0 = Sink 1 = Source	Parameter Number	32
	Access Rule	GET/SET
	Data Type	BOOL
	Group	User I/O
	Units	—
	Minimum Value	0
	Maximum Value	1
	Default Value	0

Miscellaneous Group

Keypad Mode This parameter selects if the keypad operation is maintained or momentary. 0 = Maintained 1 = Momentary	Parameter Number	45
	Access Rule	GET/SET
	Data Type	BOOL
	Group	Misc.
	Units	—
	Minimum Value	0
	Maximum Value	1
	Default Value	0

Keypad Disable This parameter disables all keypad function except for the OFF and RESET buttons. 0 = Not Disabled 1 = Disabled	Parameter Number	46
	Access Rule	GET/SET
	Data Type	BOOL
	Group	Misc.
	Units	—
	Minimum Value	0
	Maximum Value	1
	Default Value	0

Set to Defaults This parameter if set to 1 will set the device to the factory defaults. 0 = No Operation 1 = Set to Defaults	Parameter Number	47
	Access Rule	GET/SET
	Data Type	BOOL
	Group	Misc.
	Units	—
	Minimum Value	0
	Maximum Value	1
	Default Value	0

Base Enclosure Indicates the ArmorStart Base unit enclosure rating 0 = IP67 1 = Nema 4X 2-15 = Reserved	Parameter Number	56
	Access Rule	GET
	Data Type	WORD
	Group	Misc.
	Units	—
	Minimum Value	0
	Maximum Value	
	Default Value	0

Base Options Indicates the options for the ArmorStart Base unit Bit 0 = Output Fuse Bit 1 = Safety Monitor Bit 2 = CP Fuse Detect Bits 3-7 = Reserved Bit 8 = 10A Base Bit 9 = 25A Base Bit 10-15 = Reserved	Parameter Number	57
	Access Rule	GET
	Data Type	WORD
	Group	Misc.
	Units	—
	Minimum Value	0
	Maximum Value	
	Default Value	0

Wiring Options Bit 0 = Conduit Bit 1 = Round Media Bits 2-15 = Reserved	Parameter Number	58
	Access Rule	GET
	Data Type	WORD
	Group	Misc.
	Units	—
	Minimum Value	0
	Maximum Value	
	Default Value	0

Starter Enclosure Bit 0 = IP67 Bit 1 = NEMA 4x Bits 2-15 reserved	Parameter Number	59
	Access Rule	GET
	Data Type	WORD
	Group	Misc.
	Units	—
	Minimum Value	0
	Maximum Value	
	Default Value	0

Starter Option Bit 0 = HOA Keypad Bit 1 = Safety Monitor Bit 2 = Source Brake Bit 3 = Control Brake Bit 4 = Dynamic Brake Bit 5 = Output Contactor Bit 6 = EMI Filter Bit 7 = 0-10V Analog In Bits 8-15 = Reserved	Parameter Number	60
	Access Rule	GET
	Data Type	WORD
	Group	Misc.
	Units	—
	Minimum Value	0
	Maximum Value	66535
	Default Value	0

Drive DeviceNet Group

Drive Control This parameter provides the status of drive parameters.	Parameter Number	48
	Access Rule	GET
	Data Type	WORD
	Group	Drive DeviceNet
	Units	—
	Minimum Value	0
	Maximum Value	4095
	Default Value	0

Bit												Function
11	**10**	**9**	**8**	**7**	**6**	**5**	**4**	**3**	**2**	**1**	**0**	
—	—	—	—	—	—	—	—	—	—	—	X	Accel 1 En
—	—	—	—	—	—	—	—	—	—	X	—	Accel 2 En
—	—	—	—	—	—	—	—	—	X	—	—	Decel 1 En
—	—	—	—	—	—	—	—	X	—	—	—	Decel 3 En
—	—	—	—	—	—	—	X	—	—	—	—	Freq Sel 0
—	—	—	—	—	—	X	—	—	—	—	—	Freq Sel 1
—	—	—	—	—	X	—	—	—	—	—	—	Freq Sel 2
—	—	—	—	X	—	—	—	—	—	—	—	Reserved
—	—	—	X	—	—	—	—	—	—	—	—	Drv In 1
—	—	X	—	—	—	—	—	—	—	—	—	Drv In 2
—	X	—	—	—	—	—	—	—	—	—	—	Drv In 3
X	—	—	—	—	—	—	—	—	—	—	—	Drv In 4

Drvin PrFltState This parameter, in conjunction with Parameter 50, defines how the Drive Digital Inputs 1…4 will respond when a protection trip occurs. When set to 1, Drive Digital Inputs 1…4 continue to operate as command via the network. When set to 0, Drive Digital Inputs 1…4 will open or close as determined by setting in Parameter 50. 0 = Go to PrFlt Value 1 = Ignore PrFlt	Parameter Number	49
	Access Rule	GET/SET
	Data Type	BOOL
	Group	Drive DeviceNet
	Units	—
	Minimum Value	0
	Maximum Value	1
	Default Value	0

Drvin PrFltValue This parameter determines the state of Drive Digital Inputs 1…4, assumes when a trip occurs and Parameter 49 is set to 0. 0 = Open 1 = Close	Parameter Number	50
	Access Rule	GET/SET
	Data Type	BOOL
	Group	Drive DeviceNet
	Units	—
	Minimum Value	0
	Maximum Value	1
	Default Value	0

Drvin DNFltState This parameter, in conjunction with Parameter 52, defines how the Drive Digital Inputs 1…4 will respond when a DeviceNet fault occurs. When set to 1, Drive Digital Inputs 1…4 hold to last state occurs. When set to 0, will go to DnFlt Value on DN faults as determined by Parameter 52. 0 = Go to Fault Value 1 = Hold Last State	Parameter Number	51
	Access Rule	GET/SET
	Data Type	BOOL
	Group	Drive DeviceNet
	Units	—
	Minimum Value	0
	Maximum Value	1
	Default Value	0

Drvin DNFlt Value This parameter determines the state of Drive Digital Inputs 1…4 when a DeviceNet Fault occurs and Parameter 51 is set to 0. 0 = OFF 1 = ON	Parameter Number	52
	Access Rule	GET/SET
	Data Type	BOOL
	Group	Drive DeviceNet
	Units	—
	Minimum Value	0
	Maximum Value	1
	Default Value	0

Drvin DNIdlState This parameter, in conjunction with Parameter 54, defines how the Drive Digital Input 1…4 will respond when a DeviceNet network is idle. When set to 1, hold to last state occurs. When set to 0, will go to DnFlt Value on DN faults as determined by Parameter 54. 0 = Go to Fault Value 1 = Hold Last State	Parameter Number	53
	Access Rule	GET/SET
	Data Type	BOOL
	Group	Drive DeviceNet
	Units	—
	Minimum Value	0
	Maximum Value	1
	Default Value	0

StrtrDN IdlValue This parameter determines the state that Drive Digital Inputs 1…4 assume when the network is idle and Parameter 53 is set to 0. 0 = OFF 1 = ON	Parameter Number	54
	Access Rule	GET/SET
	Data Type	BOOL
	Group	Drive DeviceNet
	Units	—
	Minimum Value	0
	Maximum Value	1
	Default Value	0

High Speed En 0 = Disabled 1 = Enabled	Parameter Number	55
	Access Rule	GET/SET
	Data Type	BOOL
	Group	Drive DeviceNet
	Units	—
	Minimum Value	0
	Maximum Value	1
	Default Value	0

Display Group

Output Freq Output frequency present at T1, T2, T3.	Parameter Number	101
	Related Parameters	102, 110, 134, 135, 138
	Access Rule	GET
	Data Type	UINT
	Group	Display Group
	Units	0.1 Hz
	Minimum Value	0.0
	Maximum Value	400.0 Hz
	Default Value	Read Only

Commanded Freq Value of the active frequency command. Displays the commanded frequency even if the drive is not running.	Parameter Number	102
	Related Parameters	101, 113, 134, 135, 138
	Access Rule	GET
	Data Type	UINT
	Group	Display Group
	Units	0.1 Hz
	Minimum Value	0.0
	Maximum Value	400.0 Hz
	Default Value	Read Only

Output Current Output Current present at T1, T2, T3.	Parameter Number	103
	Access Rule	GET
	Data Type	UINT
	Group	Display Group
	Units	0.01
	Minimum Value	0.00
	Maximum Value	Drive rated amps x 2
	Default Value	Read Only

Output Voltage Output Current present at T1, T2, T3.	Parameter Number	104
	Related Parameters	131, 184, 188
	Access Rule	GET
	Data Type	UINT
	Group	Display Group
	Units	1V AC
	Minimum Value	0
	Maximum Value	230V, 460V, or 600V AC
	Default Value	Read Only

DC Bus Voltage Present DC Bus voltage level.	Parameter Number	105
	Access Rule	GET
	Data Type	UINT
	Group	Display Group
	Units	1V DC
	Minimum Value	Based on Drive Rating
	Maximum Value	
	Default Value	Read Only

Drive Status Present operating condition of the drive. Bit 0 = running Bit 1 = Forward Bit 2 = Accelerating Bit 3 = Decelerating	Parameter Number	106
	Related Parameter	195
	Access Rule	GET
	Data Type	Byte
	Group	Display Group
	Units	—
	Minimum Value	0
	Maximum Value	1
	Default Value	Read Only

Fault 1 Code A code that represents drive fault. The code will appear in this parameter as the most recent fault that has occurred.	Parameter Number	107
	Access Rule	GET
	Data Type	UINT
	Group	Display Group
	Units	—
	Minimum Value	F122
	Maximum Value	F2
	Default Value	Read Only

Fault 2 Code A code that represents a drive fault. The code will appear in this parameter as the second most recent fault that has occurred.	Parameter Number	108
	Access Rule	GET
	Data Type	UINT
	Group	Display Group
	Units	—
	Minimum Value	F122
	Maximum Value	F2
	Default Value	Read Only

Fault 3 Code A code that represents a drive fault. The code will appear in this parameter as the third most recent fault that has occurred.	Parameter Number	109
	Access Rule	GET
	Data Type	UINT
	Group	Display Group
	Units	—
	Minimum Value	F122
	Maximum Value	F2
	Default Value	Read Only

Process Display The output frequency scaled by the process factor (Parameter 199).	Parameter Number	110
	Related Parameter	101. 199
	Access Rule	GET
	Data Type	LINT
	Group	Display Group
	Units	0.01…1
	Minimum Value	0.00
	Maximum Value	9999
	Default Value	Read Only

Control Source	**Parameter Number**	112
Displays the source of the Start Command and Speed Reference. Valid Start Commands for the Bulletin 284 ArmorStart are the following: 2 = 2-wire 3 = 2-wire Level Sensitive 4 = 2-wire High Speed 5 = RS485 (DSI) Port 9 = Jog Valid Speed Commands for the Bulletin 284 ArmorStart are the following: 1 = Internal Frequency 2 = 0…10V Input/Remote Potentiometer 4 = Preset Freq X 5 = RS485 (DSI) port 6 = Step Logic Control 9 = Jog Freq	Related Parameters	136, 138, 151…154 (Digital Inx Sel) must be set to 4, 169, 170…177 (Preset Freq X), 240…247 (Step Logic Control)
	Access Rule	GET
	Data Type	UINT
	Group	Display Group
	Units	1
	Minimum Value	0
	Maximum Value	9
	Default Value	5

Contrl In Status	Parameter Number	113
Status of the control terminal block control inputs: Bit 0 = Start/Run FWD input Bit 1 = Direction/Run REV Input Bit 2 = Stop Input Bit 3 = Dynamic Brake Transistor On	Related Parameter	102, 134, 135
	Access Rule	GET
	Data Type	UINT
	Group	Display Group
	Units	1
	Minimum Value	0
	Maximum Value	1
	Default Value	0

Dig In Status	Parameter Number	114
Status of the control terminal block digital inputs: Bit 0 = Digital IN 1 Sel Bit 1 = Digital IN 2 Sel Bit 2 = Digital IN 3 Sel Bit 3 = Digital IN 4 Sel	Related Parameter	151…154
	Access Rule	GET
	Data Type	UINT
	Group	Display Group
	Units	1
	Minimum Value	0
	Maximum Value	1
	Default Value	0

Comm Status	Parameter Number	115
Status of communications ports: Bit 0 = Receiving Data Bit 1 = Transmitting Data Bit 2 = RS485 Bit 3 = Communication Error	Related Parameter	203…207
	Access Rule	GET
	Data Type	UINT
	Group	Display Group
	Units	1
	Minimum Value	0
	Maximum Value	1
	Default Value	0

Control SW Ver Main Control Board software version for AC Drive.	Parameter Number	116
	Access Rule	GET
	Data Type	UINT
	Group	Display Group
	Units	0.01
	Minimum Value	1.00
	Maximum Value	99.99
	Default Value	Read Only

Drive Type Used by Rockwell Automation field service personnel.	Parameter Number	117
	Access Rule	GET
	Data Type	UINT
	Group	Display Group
	Units	1
	Minimum Value	1001
	Maximum Value	9999
	Default Value	Read Only

Elapsed Run Time Accumulated time drive is outputting power. Time is displayed in 10 hour increments.	Parameter Number	118
	Access Rule	GET
	Data Type	UINT
	Group	Display Group
	Units	1 = 10 hrs
	Minimum Value	0
	Maximum Value	9999
	Default Value	Read Only

Testpoint Data The present value of the function selected in Parameter 202.	Parameter Number	119
	Related Parameter	202
	Access Rule	GET
	Data Type	UINT
	Group	Display Group
	Units	1 Hex
	Minimum Value	0
	Maximum Value	FFFF
	Default Value	Read Only

Analog In 0…10V The percent value of the voltage at I/O terminal 13 (100% = 10V).	Parameter Number	120
	Related Parameter	210, 211
	Access Rule	GET
	Data Type	UINT
	Group	Display Group
	Units	0.1%
	Minimum Value	0.0%
	Maximum Value	100.0%
	Default Value	Read Only

Analog In 4…20 mA **This parameter is not available for use with the Bulletin 284 ArmorStart Distributed Motor Controller.**	Parameter Number	121

Output Power The output power present at T1, T2, and T3.	Parameter Number	122
	Access Rule	GET
	Data Type	UINT
	Group	Display Group
	Units	
	Minimum Value	0.00
	Maximum Value	Drive rated power X 2
	Default Value	Read Only

Output Power Fctr The angle in electrical degrees between motor voltage and current.	Parameter Number	123
	Access Rule	GET
	Data Type	UINT
	Group	Display Group
	Units	0.1°
	Minimum Value	0.0°
	Maximum Value	180.0°
	Default Value	Read Only

Drive Temp Present operating temperature of the drive power section.	Parameter Number	124
	Access Rule	GET
	Data Type	UINT
	Group	Display Group
	Units	1°C
	Minimum Value	0
	Maximum Value	120
	Default Value	Read Only

Counter Status The current value of the counter when counter is enabled.	Parameter Number	125
	Access Rule	GET
	Data Type	UINT
	Group	Display Group
	Units	1
	Minimum Value	0
	Maximum Value	9999
	Default Value	Read Only

Timer Status The current value of the timer when timer is enabled.	Parameter Number	126
	Access Rule	GET
	Data Type	UINT
	Group	Display Group
	Units	0.1 sec
	Minimum Value	0
	Maximum Value	9999
	Default Value	Read Only

Stp Logic Status When Parameter 138 (Speed Reference) is set to 6 Stp Logic, this parameter will display the current step of step logic as defined by Parameters 240…247 (Stp Logic X).	Parameter Number	128
	Access Rule	GET
	Data Type	UINT
	Group	Display Group
	Units	1
	Minimum Value	0
	Maximum Value	8
	Default Value	Read Only

Torque Current The current value of the motor torque current.	Parameter Number	129
	Related Parameters	
	Access Rule	GET
	Data Type	UINT
	Group	Display Group
	Units	0.01
	Minimum Value	0.00
	Maximum Value	Drive Rated Amps x 2
	Default Value	Read Only

Basic Program Group

Motor NP Volts Stop drive before changing this parameter. Set to the motor name plate rated volts.	Parameter Number	131
	Related Parameters	104, 184, 185…187
	Access Rule	GET/SET
	Data Type	UINT
	Group	Basic Program
	Units	1V AC
	Minimum Value	20
	Maximum Value	240V, 460V, or 600V AC
	Default Value	Based on Drive Rating

Motor NP Hertz Set to the motor nameplate rated frequency. Stop drive before changing this parameter.	Parameter Number	132
	Related Parameters	184, 185…187, and 190
	Access Rule	GET/SET
	Data Type	UINT
	Group	Basic Program
	Units	1 Hz
	Minimum Value	15
	Maximum Value	400
	Default Value	60 Hz

Motor OL Current Set to the maximum allowable current. The drive fault on an F7 Motor Over load if the value of this parameter is exceeded by 150% for 60 seconds.	Parameter Number	133
	Related Parameter	155, 158, 161, 189, 190, 198, 214, 218
	Access Rule	GET/SET
	Data Type	UINT
	Group	Basic Program
	Units	0.1 A
	Minimum Value	0.0
	Maximum Value	Drive rated amps x 2
	Default Value	Based on Drive Rating

Minimum Freq Sets the lowest frequency the drive will output continuously.	Parameter Number	134
	Related Parameter	101, 102, 113, 135, 185, 186, 187, 210, 212
	Access Rule	GET/SET
	Data Type	UINT
	Group	Basic Program
	Units	0.1 Hz
	Minimum Value	0.0
	Maximum Value	400
	Default Value	0.0

Maximum Freq Stop drive before changing this parameter. Sets the Highest frequency the drive will output continuously.	Parameter Number	135
	Related Parameter	101, 102, 113, 134, 135, 178, 185, 186, 187, 211, 213
	Access Rule	GET/SET
	Data Type	UINT
	Group	Basic Program
	Units	0.1 Hz
	Minimum Value	0.0
	Maximum Value	400
	Default Value	60.0

Start Source Stop drive before changing this parameter. Sets the control scheme used to start the Bulletin 284 ArmorStart. 2 = 2-wire 3 = 2-wire Level Sensitive 4 = 2-wire High Speed 5 = RS485 (DSI) Port	Parameter Number	136
	Related Parameters	112 and 137
	Access Rule	GET/SET
	Data Type	UINT
	Group	Basic Program
	Units	—
	Minimum Value	0
	Maximum Value	5
	Default Value	5

Stop Mode

Valid Stop Mode for the Bulletin 284 ArmorStart are the following:
0 = **Ramp, CF** Ramp to Stop. **Stop** command clears active fault.
1 = **Coast, CF** Coast to Stop. **Stop** command clears active fault.
2 = **DC Brake,CF** DC Injection Braking Stop. **Stop** command clears active fault.
3 = **DCBrkAuto, CF** DC injection Braking with Auto Shutoff.
Standard DC Injection Braking for value set in Parameter 180 (DC Brake Time) or Drive shuts off if the drive detects that the motor is stopped. **Stop** command clears active fault
4 = **Ramp** Ramp to Stop
5 = **Coast** Coast to Stop
6 = **DC Brake** DC Injection Braking Stop
7 = **DC BrakeAuto** DC Injection Stop with Auto Shutoff.
Standard DC Injection Braking for value set in Parameter 180 (DC Brake Time)
or
Drive shuts off if current limit is exceeded
8 = **Ramp** + **EM B, CF** Ramp to Stop with EM Brake Control. **Stop** command clears active fault.
9 = **Ramp** + **EM Brk** Ramp to Stop with EM Brake Control.

Parameter Number	137
Related Parameters	136, 180, 181, 182, 205, 260, 261
Access Rule	GET/SET
Data Type	UINT
Group	Basic Program
Units	—
Minimum Value	0
Maximum Value	9
Default Value	9

Speed Reference

Valid Speed References for the Bulletin 284 ArmorStart are the following:
1 = Internal Freq
2 = 0…10V Input
4 = Preset Freq
5 = Comm port
6 = Stp Logic
9 = Jog Freq

Note: Option 2 must be selected when using 0…10V Analog Input.

Parameter Number	138
Related Parameters	101, 102, 112, 139, 140, 151, 152, 153, 154, 169, 170…173, 174…177, 210, 211, 213, 232, 240…247, and 250…257
Access Rule	GET/SET
Data Type	UINT
Group	Basic Program
Units	—
Minimum Value	0
Maximum Value	7
Default Value	5

Accel Time 1

Sets the rate of acceleration for all speed increases.

$$\frac{\text{Maximum Freq}}{\text{Accel Time}} = \text{Accel Rate}$$

Parameter Number	139
Related Parameters	138, 140, 151, 152, 153, 154, 167, 170…173, 174…177, and 240…247
Access Rule	GET/SET
Data Type	UINT
Group	Basic Program
Units	0.1 sec
Minimum Value	0.0 sec
Maximum Value	600.0 sec
Default Value	10.0 sec

Motor OL Current Set to the maximum allowable current. The drive fault on an F7 Motor Over load if the value of this parameter is exceeded by 150% for 60 seconds.	Parameter Number	133
	Related Parameter	155, 158, 161, 189, 190, 198, 214, 218
	Access Rule	GET/SET
	Data Type	UINT
	Group	Basic Program
	Units	0.1 A
	Minimum Value	0.0
	Maximum Value	Drive rated amps x 2
	Default Value	Based on Drive Rating

Minimum Freq Sets the lowest frequency the drive will output continuously.	Parameter Number	134
	Related Parameter	101, 102, 113, 135, 185, 186, 187, 210, 212
	Access Rule	GET/SET
	Data Type	UINT
	Group	Basic Program
	Units	0.1 Hz
	Minimum Value	0.0
	Maximum Value	400
	Default Value	0.0

Maximum Freq Stop drive before changing this parameter. Sets the Highest frequency the drive will output continuously.	Parameter Number	135
	Related Parameter	101, 102, 113, 134, 135, 178, 185, 186, 187, 211, 213
	Access Rule	GET/SET
	Data Type	UINT
	Group	Basic Program
	Units	0.1 Hz
	Minimum Value	0.0
	Maximum Value	400
	Default Value	60.0

Start Source Stop drive before changing this parameter. Sets the control scheme used to start the Bulletin 284 ArmorStart. 2 = 2-wire 3 = 2-wire Level Sensitive 4 = 2-wire High Speed 5 = RS485 (DSI) Port	Parameter Number	136
	Related Parameters	112 and 137
	Access Rule	GET/SET
	Data Type	UINT
	Group	Basic Program
	Units	—
	Minimum Value	0
	Maximum Value	5
	Default Value	5

Stop Mode

Valid Stop Mode for the Bulletin 284 ArmorStart are the following:
0 = **Ramp, CF** Ramp to Stop. **Stop** command clears active fault.
1 = **Coast, CF** Coast to Stop. **Stop** command clears active fault.
2 = **DC Brake,CF** DC Injection Braking Stop. **Stop** command clears active fault.
3 = **DCBrkAuto, CF** DC injection Braking with Auto Shutoff.
Standard DC Injection Braking for value set in Parameter 180 (DC Brake Time) or Drive shuts off if the drive detects that the motor is stopped. **Stop** command clears active fault
4 = **Ramp** Ramp to Stop
5 = **Coast** Coast to Stop
6 = **DC Brake** DC Injection Braking Stop
7 = **DC BrakeAuto** DC Injection Stop with Auto Shutoff.
Standard DC Injection Braking for value set in Parameter 180 (DC Brake Time)
or
Drive shuts off if current limit is exceeded
8 = **Ramp** + **EM B, CF** Ramp to Stop with EM Brake Control. **Stop** command clears active fault.
9 = **Ramp** + **EM Brk** Ramp to Stop with EM Brake Control.

Parameter Number	137
Related Parameters	136, 180, 181, 182, 205, 260, 261
Access Rule	GET/SET
Data Type	UINT
Group	Basic Program
Units	—
Minimum Value	0
Maximum Value	9
Default Value	9

Speed Reference

Valid Speed References for the Bulletin 284 ArmorStart are the following:
1 = Internal Freq
2 = 0…10V Input
4 = Preset Freq
5 = Comm port
6 = Stp Logic
9 = Jog Freq

Note: Option 2 must be selected when using 0…10V Analog Input.

Parameter Number	138
Related Parameters	101, 102, 112, 139, 140, 151, 152, 153, 154, 169, 170…173, 174…177, 210, 211, 213, 232, 240…247, and 250…257
Access Rule	GET/SET
Data Type	UINT
Group	Basic Program
Units	—
Minimum Value	0
Maximum Value	7
Default Value	5

Accel Time 1

Sets the rate of acceleration for all speed increases.

$$\frac{\text{Maximum Freq}}{\text{Accel Time}} = \text{Accel Rate}$$

Parameter Number	139
Related Parameters	138, 140, 151, 152, 153, 154, 167, 170…173, 174…177, and 240…247
Access Rule	GET/SET
Data Type	UINT
Group	Basic Program
Units	0.1 sec
Minimum Value	0.0 sec
Maximum Value	600.0 sec
Default Value	10.0 sec

Decel Time 1

Sets the rate of deceleration for all speed decreases.

$$\frac{\text{Maximum Freq}}{\text{Decel Time}} = \text{Decel Rate}$$

Parameter Number	140
Related Parameters	138, 139, 151, 152, 153, 154, 168, 170…173, 174…177, and 240…247
Access Rule	GET/SET
Data Type	UINT
Group	Basic Program
Units	0.1 sec
Minimum Value	0.1 sec
Maximum Value	600.0 sec
Default Value	10.0 sec

Reset To Defaults

Stop drive before changing this parameter.

Resets all parameter values to factory defaults.

0 = Ready/Idle (Default)

1 = Factory Rset

Parameter Number	141
Access Rule	GET/SET
Data Type	BOOL
Group	Basic Program Group
Units	—
Minimum Value	1
Maximum Value	1
Default Value	0

Motor OL Ret

Enables/disables the Motor overload Retention function. When Enabled, the value held in the motor overload counter is saved at power-down and restored at power-up. A change to this parameter setting resets the counter.

0 = Disabled (Default)

1 = Enabled

Parameter Number	143
Access Rule	GET/SET
Data Type	BOOL
Group	Basic Program Group
Units	—
Minimum Value	0
Maximum Value	1
Default Value	0

Advanced Program Group

151 (Digital In 1 SEL)
152 (Digital In 2 SEL)
153 (Digital In 3 SEL)
154 (Digital In 4 SEL)

Stop drive before changing this parameter.

Selects the function for the digital inputs.

Parameter Number	151, 152, 153, 154
Related Parameters	112, 114, 138…140, 167, 168, 170…173, 174…177, 178, 179, 240…247
Access Rule	GET/SET
Data Type	UINT
Group	Advanced Program Group
Units	See Table 4.2 for details
Minimum Value	
Maximum Value	
Default Value	

Table 4.2 Digital Inputs Options

Options	Description	
0	Not Used	Terminal has no function but can be read over network communication via Parameter 114 (Dig In Status).
1	Acc & Dec2	• When active, Parameter 167 (Accel Time 2) and Parameter 168 (Decel Time 2) are used for all ramp rates except Jog. • Can only be tied to one input.
2	Jog	• When input is present, drive accelerates according to the value set in Parameter 179 (Jog Accel/Decel) and ramps to the value set in Parameter 178 (Jog Frequency). • When the input is removed, drive ramps to a stop according to the value set in Parameter 179 (Jog Accel/Decel). • A valid **Start** command will override this input.
3	Aux Fault	When enable, an F2 **Auxiliary Input** fault will occur when the input is removed.
4	**Preset Freq** (Parameters 151 and 152 Default)	Refer to Parameters 170…173 and 174…177.
5	**Local** (Parameter 153 Default)	Option not valid for Bulletin 284 ArmorStart.
6	Comm Port	This option is the default setting.
7	Clear Fault	When active, clears active fault.
8	RampStop,CF	Causes drive to immediately ramp to stop regardless of how Parameter 137 (Stop Mode) is set.
9	CoastStop,CF	Causes drive to immediately ramp to stop regardless of how Parameter 137 (Stop Mode) is set.
10	DCInjStop,CF	Causes drive to immediately begin a DC Injection stop regardless of how Parameter 137 (Stop Mode) is set.
11	**Jog Forward** (Parameter 154 Default)	Drive accelerates to Parameter 178 (Jog Frequency) according to Parameter 179 (Jog Accel/Decel) and ramps to stop when input becomes inactive. A valid start will override this command.
12	Jog Reverse	Drive accelerates to Parameter 178 (Jog Frequency) according to Parameter 179 (Jog Accel/Decel) and ramps to stop when input becomes inactive. A valid start will override this command.
13	10V In Ctrl	Option with Factory Installed option — A10 (0…10V Analog Input). Selects 0…10V or +/-10V as the frequency reference. Start source is not changed.
14	20MA In Ctrl	Option not valid for Bulletin 284 ArmorStart.
15	PID Disable	Disabled PID function. Drive uses the next valid non-PID speed reference.
16	MOP Up	Increases the value of Parameter 169 (internal Freq) at a rate 2 Hz per second. Default of Parameter 169 is 60 Hz.
17	MOP Down	Decreases the value of Parameter 169 (internal Freq) at a rate 2 Hz per second. Default of Parameter 169 is 60 Hz.
18	Timer Start	Clears and starts the timer function. May be used to control the relay or opto outputs.
19	Counter In	Starts the counter function. May be used to control the relay or opto outputs.
20	Reset Timer	Clears the active timer.
21	Reset Countr	Clears the active counter.
22	Rset Tim&Cnt	Clear active timer and counter.
23	Logic In1	Logic Function input number 1. May be used to control the relay or opto outputs (see Parameters 155, 158, 161 options 11…14). May be used in conjunction with Step Logic Parameters 240…247 (Stp Logic X).
24	Logic In2	Logic Function input number 1. May be used to control the relay or opto outputs (see Parameters 155, 158, 161 options 11…14). May be used in conjunction with Step Logic Parameters 240…247 (Stp Logic X).
25	Current Lmt2	When active, Parameter 218 (Current Limit 2) determines the drive current limit level.
26	Anlg Invert	Inverts the scaling of analog input levels set in parameter 210 (Anlg In 0…10V LO) and parameter 211 (Anlg In 0…10 HI).

155 (Relay Out Sel) Sets the condition that changes the state of the output relay contacts.	Parameter Number	155
	Related Parameters	133, 156, 192, 240…247, 250…257, 260, 261
	Access Rule	GET/SET
	Data Type	UINT
	Group	Advanced Program Group
	Units	—
	Minimum Value	0
	Maximum Value	22
	Default Value	22

Table 4.3

Options	Description	
0	**Ready/Fault** (Default)	Relay changes state when power is applied. This indicates the drive is ready for operation. Relay returns drive to shelf state when power is removed or a fault occurs.
1	At Frequency	Drive reached commanded frequency.
2	MotorRunning	Motor is receiving power from drive.
3	Reverse	Drive is commanded to run in reverse direction.
4	Motor Overld	Motor overload condition exists.
5	Ramp Reg	Ramp regulator is modifying the programmed accel/decal times to avoid overcurrent or overvoltage fault from occurring.
6	Above Freq	Drive exceeds the frequency (Hz) value set in Parameter 156 (Relay Out Level) Use Parameter 156 to set threshold.
7	Above Cur	Drive exceeds the current (% Amps) value set in Parameter 156 (Relay Out Level) Use Parameter 156 to set threshold.
8	Above DCVolt	Drive exceeds the DC bus voltage value set in Parameter 156 (Relay Out Level). Use Parameter 156 to set threshold.
9	Retries Exst	Value set in Parameter 192 (Auto Rstrt Tries) is exceeded.
10	Above Anlg V	Option not valid for Bulletin 284 ArmorStart.
11	Logic In 1	An input is programmed as **Logic In 1** and is active.
12	Logic In 2	An input is programmed as **Logic In 2** and is active.
13	Logic In 1 & 2	Both Logic inputs are programmed and active.
14	Logic In 1 or 2	One or both Logic inputs are programmed and one or both is active.
15	StpLogic Out	Drive enters Step Logic step with Digit 3 of Command Word (Parameters 240…247).
16	Timer Out	Timer has reached value set in Parameter 156 (Relay Out Level). Use Parameter 156 to set threshold.
17	Counter Out	Counter has reached value set in Parameter 156 (Relay Out Level). Use Parameter 156 to set threshold.
18	Above PF Ang	Power factor angle has exceeded the value set in Parameter 156 (Relay Out Level). Use Parameter 156 to set threshold.
19	Anlg In Loss	Analog input loss has occurred. Program parameter 122 (Analog In Los) for desired action when loss occurs
20	ParamControl	Enables the output to be controlled over the network communications by writing to Parameter 156 (Relay Out Level) (0 = Off, 1 = ON).
21	NonRec Fault	Value set in Parameter 192 (Auto Rstrt Tries) is exceeded.
22	EM Brk Cntrl	EM Brake is energized. Program Parameter 260 (EM Brk Off Delay) and Parameter 262 (EM Brk On Delay) for desired action.

Relay Out Level
Sets the trip point for the digital output relay if the value of Parameter 155 (Relay Out Sel) is 6, 7, 8, 10, 16, 17, 18, or 20.

Parameters 155 Setting	Parameter 156 Min./Max.
6	0/400 Hz
7	0/180%
8	0/815V
10	0/100%
16	0.1/9999 sec
17	1/9999 counts
18	1/180°
20	0/1

Parameter Number	156
Related Parameters	155, 158, 161
Access Rule	GET/SET
Data Type	UINT
Group	Advanced Program Group
Units	0.1
Minimum Value	0.0
Maximum Value	9999
Default Value	0.0

158 (Opto Out1 Sel)
161 (Opto Out2 Sel)
Determines the operation of the programmable opto outputs.

Parameter Number	158, 161
Related Parameters	133, 156, 192, 240…247, 250…257
Access Rule	GET/SET
Data Type	UINT
Group	Advanced Program Group
Units	See Table 4.4 for details
Minimum Value	
Maximum Value	
Default Value	

Table 4.4 Parameter 158 and 161 Options

Options	Description	
0	**Ready/Fault** (Default)	Opto outputs are active when power is applied. This indicates the drive is ready for operation. Opto outputs are inactive when power is removed or a fault occurs.
1	**At Frequency** (Parameter 161 Default)	Drive reached commanded frequency.
2	**MotorRunning** (Parameter 158Default)	Motor is receiving power from drive.
3	Reverse	Drive is commanded to run in reverse direction.
4	Motor OverId	Motor overload condition exists.
5	Ramp Reg	Ramp regulator is modifying the programmed accel/decal times to avoid overcurrent or overvoltage fault from occurring.
6	Above Freq	Drive exceeds the frequency (Hz) value set in Parameter 159 (Opto Out 1 Level) or Parameter 162 (Opto Output 2 Level) Use Parameter 159 or 162 to set threshold.
7	Above Cur	Drive exceeds the current (% Amps) value set in Parameter 159 (Opto Out 1 Level) or Parameter 162 (Opto Output 2 Level). Use Parameter 159 or 162 to set threshold. **Important:** Value for Parameter 159 or 162 must entered in percent of the drive rated output current.
8	Above DCVolt	Drive exceeds the DC bus voltage value set in Parameter 159 (Opto Out 1 Level). Use Parameter 159 or 162 to set threshold.
9	Retries Exst	Value set in Parameter 192 (Auto Rstrt Tries) is exceeded.
10	Above Anlg V	Option not valid for Bulletin 284 ArmorStart.

Options	Description	
11	Logic In 1	An input is programmed as **Logic In 1** and is active.
12	Logic In 2	An input is programmed as **Logic In 2** and is active.
13	Logic In 1 & 2	Both Logic inputs are programmed and active.
14	Logic In 1 or 2	One or both Logic inputs are programmed and one or both is active.
15	StpLogic Out	Drive enters Step Logic step with Digit 3 of Command Word (Parameters 240…247).
16	Timer Out	Timer has reached value set in Parameter 159 (Opto Out 1 Level) or Parameter 162 (Opto Output 2 Level). Use Parameter 159 or 162 to set threshold.
17	Counter Out	Counter has reached value set in Parameter 159 (Opto Out 1 Level) or Parameter 162 (Opto Output 2 Level). Use Parameter 159 or 162 to set threshold.
18	Above PF Ang	Power factor angle has exceeded the value set in Parameter 159 (Opto Out 1 Level) or Parameter 162 (Opto Output 2 Level). Use Parameter 159 or 162 to set threshold.
19	Anlg In Loss	Analog input loss has occurred. Program parameter 122 (Analog In Los) for desired action when loss occurs
20	ParamControl	Enables the output to be controlled over the network communications by writing to Parameter 159 (Opto Out 1 Level) or Parameter 162 (Opto Output 2 Level) (0 = Off, 1 = ON).
21	NonRec Fault	Value set in Parameter 192 (Auto Rstrt Tries) is exceeded. **ATTENTION** Parameter 192 (Auto Rstrt Tries) is not enabled. A non-resettable fault has occurred.
22	EM Brk Cntrl	EM Brake is energized. Program Parameter 260 (EM Brk Off Delay) and Parameter 262 (EM Brk On Delay) for desired action.

159 (Opto Out1 Level)
162 (Opto Out2 Level)
Sets the trip point for the digital output relay if the value of Parameter 158 (Opto Out1 Sel) or Parameter 161 (Opto Out2 Sel) is 6, 7, 8, 10, 16, 17, 18, or 20.

Parameters 158 and 161 Setting	Parameters 159 and 161 Min./Max.
6	0/400 Hz
7	0/180%
8	0/815V
10	0/100%
16	0.1/9999 sec
17	1/9999 counts
18	1/180°
20	0/1

Parameter Number	159 162
Access Rule	GET/SET
Data Type	UINT
Group	Advanced Program Group
Units	—
Minimum Value	0.0
Maximum Value	9999
Default Value	0.0

Opto Out Logic
Determines the logic (Normally Open/N.O. or Normally Closed/N.C.) of the opto outputs.

Option	Opto Out1 Logic	Opto Out2 Logic
0	N.O. (Normally Open)	N.O. (Normally Open)
1	N.C. (Normally Closed)	N.O. (Normally Open)
2	N.O. (Normally Open)	N.C. (Normally Closed)
3	N.C. (Normally Closed)	N.C. (Normally Closed)

Parameter Number	164
Access Rule	GET/SET
Data Type	UINT
Group	Advanced Program Group
Units	1
Minimum Value	0
Maximum Value	3
Default Value	0

Analog Out Sel Sets the analog output signal (0…10V). The output is used to provide a signal that is proportional to several drives	Parameter Number	165
	Related Parameters	135, 166
	Access Rule	GET/SET
	Data Type	UINT
	Group	Advanced Program Group
	Units	See Table for details
	Minimum Value	
	Maximum Value	
	Default Value	

Table 4.5 Analog Output Options

Options		Output Range	Minimum Output Value	Maximum Output Value A066 (Analog Out High)	DIP Switch Position	Related Parameter
0	OutFreq 0…10	0…10V	0V = 0 Hz	P035 (Maximum Freq)	0…10V	101
1	OutCurr 0…10	0…10V	0V = 0 Amps	200% Drive Rated Output Current	0…10V	103
2	OutVolt 0…10	0…10V	0V = 0 Volts	120% Drive Rated Output Volts	0…10V	104
3	OutPowr 0…10	0…10V	0V = 0 kW	200% Drive Rated Power	0…10V	122
4	TstData 0…10	0…10V	0V = 0000	65535 (Hex FFFF)	0…10V	119
5	OutFreq 0…20	0…20 mA	0 mA = 0 Hz	P035 (Maximum Freq)	0…20 mA	101
6	OutCurr 0…20	0…20 mA	0 mA = 0 Amps	200% Drive Rated Output Current	0…20 mA	103
7	OutVolt 0…20	0…20 mA	0 mA = 0 Volts	120% Drive Rated Output Volts	0…20 mA	104
8	OutPowr 0…20	0…20 mA	0 mA = 0 kW	200% Drive Rated Power	0…20 mA	122
9	TstData 0…20	0…20 mA	0 mA = 0000	65535 (Hex FFFF)	0…20 mA	119
10	OutFreq 4…20	4…20 mA	4 mA = 0 Hz	P035 (Maximum Freq)	0…20 mA	101
11	OutCurr 4…20	4…20 mA	4 mA = 0 Amps	200% Drive Rated Output Current	0…20 mA	103
12	OutVolt 4…20	4…20 mA	4 mA = 0 Volts	120% Drive Rated Output Volts	0…20 mA	104
13	OutPowr 4…20	4…20 mA	4 mA = 0 kW	200% Drive Rated Power	0…20 mA	122
14	TstData 4…20	4…20 mA	4 mA = 0000	65535 (Hex FFFF)	0…20 mA	119
15	OutTorq 0…10	0…10V	0V = 0 Amps	200% Drive Rated FLA	0…10V	129
16	OutTorq 0…20	0…20 mA	0 mA = 0 Amps	200% Drive Rated FLA	0…20 mA	129
17	OutTorq 4…20	4…20 mA	4 mA = 0 Amps	200% Drive Rated FLA	0…20 mA	129
18	Setpnt 0…10	0…10V	0V = 0%	100.0% Setpoint Setting	0…10V	209
19	Setpnt 0…20	0…20 mA	0 mA = 0%	100.0% Setpoint Setting	0…20 mA	209
20	Setpnt 4…20	4…20 mA	4 mA = 0%	100.0% Setpoint Setting	0…20 mA	209

Note: Only output range 0…10V applies with the factory installed A10 option.
Options 5…14, 16, 17, 19, and 20 are not valid options.

Analog Out High Scales the maximum output value for parameter 165 source setting	Parameter Number	166
	Access Rule	GET/SET
	Data Type	UINT
	Group	Advanced Program Group
	Units	%
	Minimum Value	0%
	Maximum Value	800%
	Default Value	100%

Accel Time 2

When active, sets the rate of acceleration for all speed increases except for jog.

$$\frac{\text{Maximum Freq}}{\text{Accel Time}} = \text{Accel Rate}$$

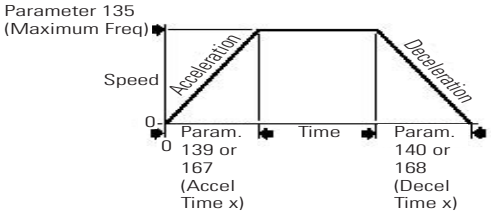

Parameter Number	167
Related Parameters	139, 151, 152, 153, 154, 170…173, 174…177, 240…247
Access Rule	GET/SET
Data Type	UINT
Group	Advanced Program Group
Units	0.1 sec
Minimum Value	0.0
Maximum Value	600.0
Default Value	20.0

Decel Time 2

When active, sets the rate of deceleration for all speed decreases except for jog.

$$\frac{\text{Maximum Freq}}{\text{Decel Time}} = \text{Decel Rate}$$

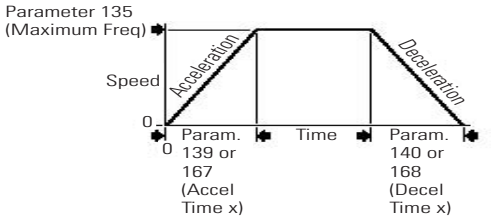

Parameter Number	168
Related Parameters	140, 151, 152, 153, 154, 170…173, 174…177, 240…247
Access Rule	GET/SET
Data Type	UINT
Group	Advanced Program Group
Units	0.1 sec
Minimum Value	0.0
Maximum Value	600.0
Default Value	20.0

Internal Freq

Provide the frequency command to drive when Parameter 138 (Speed Reference) is set to 1 **Internal Freq**. When enabled, this parameter will change the frequency command in real time.

Parameter Number	169
Related Parameters	138, 162
Access Rule	GET/SET
Data Type	UINT
Group	Advanced Program Group
Units	0.1 Hz
Minimum Value	0.0
Maximum Value	400.0
Default Value	60.0

170 (Preset Freq 0) ❶ **171 (Preset Freq 1)** **172 (Preset Freq 2)** **173 (Preset Freq 3)** **174 (Preset Freq 4)** **175 (Preset Freq 5)** **176 (Preset Freq 6)** **177 (Preset Freq 7)**	Parameter Number	170…173, 174…177
	Related Parameters	138, 139, 140, 151, 152, 152, 153, 167, 168, 240…247, 250…257
	Access Rule	GET/SET
	Data Type	UINT
	Group	Advanced Program Group
	Units	0.1 Hz
	Minimum Value	0.0
	Maximum Value	400.0
	Default Value	See Table 4.A

Table 4.A 170…177 Preset Freq Options

Values Provides a fixed frequency command value when 151…153 (Digital Inx Sel) is set to 4 **Preset Frequencies**.	170 Default ❶	0.0 Hz
	171 Default	5.0 Hz
	172 Default	10.0 Hz
	173 Default	20.0 Hz
	174 Default	30.0 Hz
	175 Default	40.0 Hz
	176 Default	50.0 Hz
	177 Default	60.0 Hz
	Min./Max.	0.0/400.0 Hz
	Display	0.1 Hz

Input State of Digital In 1 (I/O Terminal 05 when Parameter 151 = 4)	Input State of Digital In 2 (I/O Terminal 06 when Parameter 152 = 4)	Input State of Digital In 3 (I/O Terminal 07 when Parameter 153 = 4)	Frequency Source	Accel/Decel Parameter Used ❷
0	0	0	170 (Preset Freq 0)	(Accel Time 1)/(Decel Time 1)
1	0	0	171 (Preset Freq 1)	(Accel Time 1)/(Decel Time 1)
0	1	0	172 (Preset Freq 2)	(Accel Time 2)/(Decel Time 2)
1	1	0	173 (Preset Freq 3)	(Accel Time 2)/(Decel Time 2)
0	0	1	174 (Preset Freq 4)	(Accel Time 3)/(Decel Time 3)
1	0	1	175 (Preset Freq 5)	(Accel Time 3)/(Decel Time 3)
0	1	1	176 (Preset Freq 6)	(Accel Time 4)/(Decel Time 4)
1	1	1	177 (Preset Freq 7)	(Accel Time 4)/(Decel Time 4)

❶ To activate 170 (Preset Freq 0) set 138 (Speed Reference) to option 4 **Preset Freq**.

❷ When a Digital Input is set to **Accel 2 & Decel 2**, and the input is active, that input overrides the settings in this table.

Jog Frequency Sets the output frequency when the jog command is issued.	Parameter Number	178
	Related Parameters	135, 151, 152, 153, 154, 179
	Access Rule	GET/SET
	Data Type	UINT
	Group	Advanced Program Group
	Units	0.1 Hz
	Minimum Value	0.0
	Maximum Value	400.0
	Default Value	10.0

Jog Accel/Decel Sets the acceleration and deceleration time when a jog command is issued.	Parameter Number	179
	Related Parameters	178, 151, 152, 153, 154
	Access Rule	GET/SET
	Data Type	UINT
	Group	Advanced Program Group
	Units	0.1 sec
	Minimum Value	0.1
	Maximum Value	600.0
	Default Value	10.0

DC Brake Time Sets the length of time that DC brake current is injected into the motor. Refer to Parameter 181 DC Brake Level.	Parameter Number	180
	Related Parameters	137, 181
	Access Rule	GET/SET
	Data Type	UINT
	Group	Advanced Program Group
	Units	0.1 sec
	Minimum Value	0.0
	Maximum Value	99.9 (Setting of 99.9 = Continuous)
	Default Value	0.0

DC Brake Level Defines the maximum DC brake current, in amps, applied to the motor when Parameter 137 (Stop Mode) is set to either **Ramp** or **DC Brake**.	Parameter Number	181
	Related Parameters	137, 180
	Access Rule	GET/SET
	Data Type	UINT
	Group	Advanced Program Group
	Units	0.1 A
	Minimum Value	0.0
	Maximum Value	Drive rated amps X 1.8
	Default Value	Drive rated amps X 0.05

ATTENTION

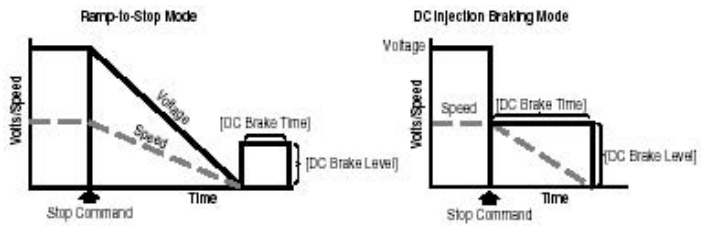

• If a hazard of injury due to movement of equipment or material exists, an auxiliary mechanical braking device must be used.

• This feature should not be used with synchronous or permanent magnet motors. Motors may be demagnetized during braking.

DB Resistor Sel

Stop drive before changing this parameter.

Enables/disables external dynamic braking.

Setting	Min./Max.
0	Disabled
1	Normal RA Res (5% Duty Cycle)
2	No Protection (100% Duty Cycle)
3…99	x% Duty Cycle Limited (3…99% of Duty Cycle)

Parameter Number	182
Related Parameters	137
Access Rule	GET/SET
Data Type	UINT
Group	Advanced Program Group
Units	1
Minimum Value	0
Maximum Value	99
Default Value	0

S Curve %

Sets the percentage of acceleration or deceleration time that is applied to ramp as S Curve. Time is added, half at the beginning and half at the end of the ramp.

Parameter Number	183
Access Rule	GET/SET
Data Type	UINT
Group	Advanced Program Group
Units	1%
Minimum Value	0
Maximum Value	100
Default Value	0% disabled

Figure 4.2

Example:
Accel Time = 10 Seconds
S Curve Setting = 50%
S Curve Time = 10 × 0.5 = 5 Seconds
Total Time = 10 + 5 = 15 Seconds

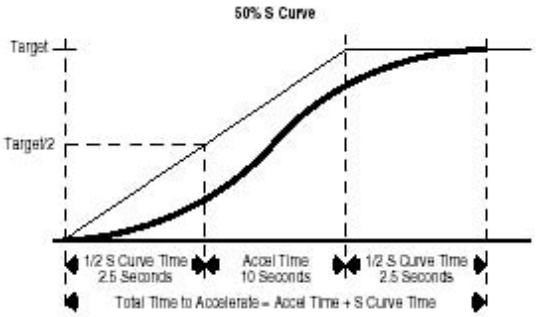

Boost Select

Sets the boost voltage (% of Parameter 131 [Motor NP Volts]) and redefines the Volts per Hz curve. Active when Parameter 225 (Torque Perf Mode) = 0V/Hz Drive may add additional voltage unless Option 5 is selected.

See Table 4.6 for details

Parameter Number	184
Related Parameters	104, 131, 132, 185, 186, 187, 225
Access Rule	GET/SET
Data Type	UINT
Group	Advanced Program Group
Units	—
Minimum Value	0
Maximum Value	14
Default Value	8

Table 4.6 Boost Select Options

Options	Description	
0	Custom V/Hz	Variable Torque (Typical fan/pump curves)
1	30.0, VT	
2	35.0, VT	
3	40.0, VT	
4	45.0, VT	
5	0.0 no IR	Constant Torque
6	0.0	
7	2.5, CT (Default for 5 Hp/4.0 kW Drive)	
8	5.0, CT Default	
9	7.5,CT	
10	10.0,CT	
11	12.5,CT	
12	15.0,CT	
13	17.5,CT	
14	20.0,CT	

Figure 4.1

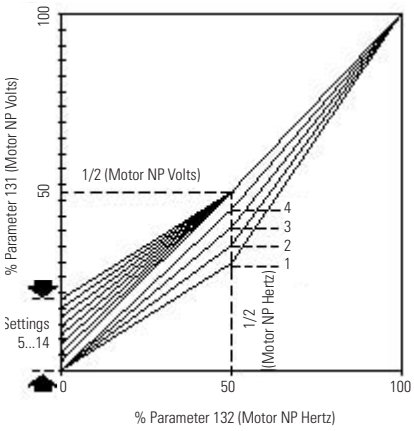

Start Boost Sets the boost voltage (% of Parameter 131 [Motor NP Volts]) and redefines the Volts per Hz curve when Parameter 184 (Boost Select) = 0 Custom V/Hz and Parameter 225 (Torque Perf Mode) = 0V/Hz.	Parameter Number	185
	Related Parameters	131, 132, 134, 135, 184, 186, 187, 188, 225
	Access Rule	GET/SET
	Data Type	UINT
	Group	Advanced Program Group
	Units	1.1%
	Minimum Value	0.0%
	Maximum Value	25.0%
	Default Value	2.5%

Figure 4.3

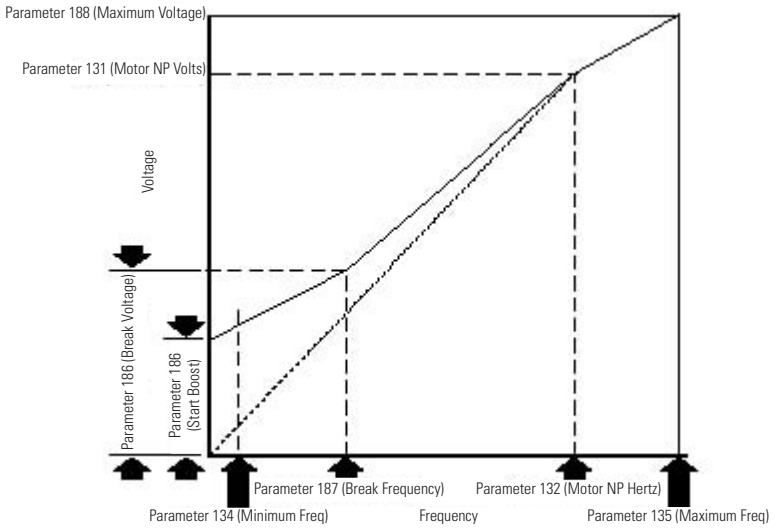

Brake Voltage Sets the frequency where brake voltage is applied when Parameter 184 (Boost Select) = 0 Custom V/Hz and Parameter 225 (Torque Perf Mode) = 0V/Hz.	Parameter Number	186
	Related Parameters	131, 132, 134, 135, 184, 185, 187, 188, 225
	Access Rule	GET/SET
	Data Type	UINT
	Group	Advanced Program Group
	Units	1.1%
	Minimum Value	0.0%
	Maximum Value	100.0%
	Default Value	25.0%

Brake Frequency Sets the frequency where brake frequency is applied when Parameter 184 (Boost Select) = 0 Custom V/Hz and Parameter 225 (Torque Perf Mode) = 0V/Hz.	Parameter Number	187
	Related Parameters	131, 132, 134, 135, 184, 185, 186, 188, 225
	Access Rule	GET/SET
	Data Type	UINT
	Group	Advanced Program Group
	Units	0.1 Hz
	Minimum Value	0.0 Hz
	Maximum Value	400.0 Hz
	Default Value	15.0 Hz

Maximum Voltage Sets the highest voltage the drive will output.	Parameter Number	188
	Related Parameters	104, 185, 186, 187
	Access Rule	GET/SET
	Data Type	UINT
	Group	Advanced Program Group
	Units	1V AC
	Minimum Value	20V AC
	Maximum Value	Drive Rated Volts
	Default Value	Drive Rated Volts

Current Limit 1 Maximum output current allowed before current limiting occurs	Parameter Number	189
	Related Parameters	133, 218
	Access Rule	GET/SET
	Data Type	UINT
	Group	Advanced Program Group
	Units	0.1 A
	Minimum Value	0.1 A
	Maximum Value	Drive rated amps X 1.8
	Default Value	Drive rated amps X 1.5

Motor OL Select	Parameter Number	190
Drive provides Class 10 motor overload protection. Setting 0…2 select the derating factor for I^2t overload function. 0 = No Derate 1 = Min. Derate 2 = Max. Derate	Related Parameters	132, 133
	Access Rule	GET/SET
	Data Type	UINT
	Group	Advanced Program Group
	Units	1
	Minimum Value	0
	Maximum Value	2
	Default Value	0

Figure 4.4 Overload Trip Curves

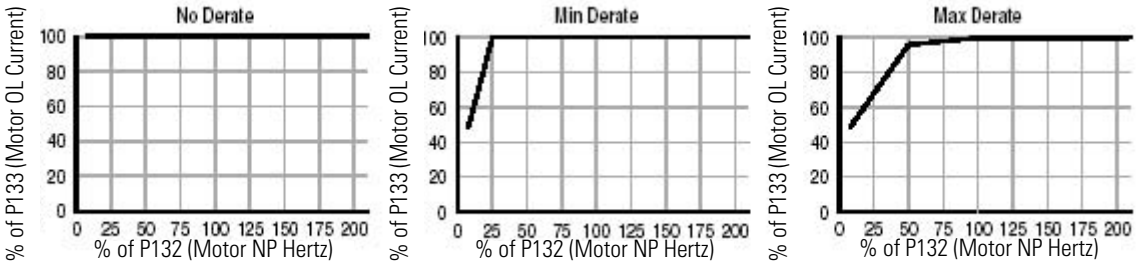

PWM Frequency	Parameter Number	191
Sets the carrier frequency the PWM output waveform. The Figure 4.5 provides derating guidelines based on the PWM frequency setting.	Related Parameters	224
	Access Rule	GET/SET
	Data Type	UINT
	Group	Advanced Program Group
	Units	0.I Hz
	Minimum Value	2.0 Hz
	Maximum Value	16.0 Hz
	Default Value	4.0 Hz

Figure 4.5

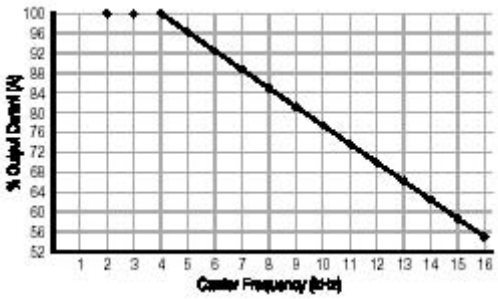

Auto Rstrt Tries Set the maximum number of times the drive attempts to reset a fault and restart.	Parameter Number	192
	Related Parameter	155, 158, 161, 193
	Access Rule	GET/SET
	Data Type	UINT
	Group	Advanced Program Group
	Units	1
	Minimum Value	0
	Maximum Value	9
	Default Value	0

Clear a Type 1 Fault and Restart the Drive

1. Set Parameter 192 (Auto Rstrt Tries) to a value other than 0.
2. Set Parameter 193 (AutoRstrt Delay) to a value other than 0.

Clear an Overvoltage, Undervoltage, or Heatsink OvrTmp Fault without Restarting the Drive

1. Set Parameter 192 (Auto Rstrt Tries) to a value other than 0.
2. Set Parameter 193 (AutoRstrt Delay) to 0.

ATTENTION

Equipment damage and/or personal injury may result if this parameter is used in an inappropriate application. Do not use this function without considering applicable local, national, and international codes, standards, regulations, or industry guidelines.

Auto Rstrt Delay Sets time between restart attempts when Parameter 192 (Auto Rstrt Tries) is set to a value other than zero.	Parameter Number	193
	Related Parameters	192
	Access Rule	GET/SET
	Data Type	UINT
	Group	Advanced Program Group
	Units	0.1 sec
	Minimum Value	0.0
	Maximum Value	300.0 sec
	Default Value	1.0 sec

Start at PowerUp

Stop drive before changing this parameter.

Enables/disables a feature that allows a Start or Run command to automatically cause the drive to resume running at command speed after the drive input is restored. Requires a digital input configured Run or Start and a valid start contact. This parameter will not function if Parameter 136 (Start Source) is set to 4 **2-W High Speed**.
0 = Disabled
1 = Enabled

ATTENTION Equipment damage and/or personal injury may result if this parameter is used in an inappropriate application. Do not use this function without considering applicable local, national, and international codes, standards, regulations, or industry guidelines.

Parameter Number	194
Related Parameters	192
Access Rule	GET/SET
Data Type	UINT
Group	Advanced Program Group
Units	—
Minimum Value	0
Maximum Value	1
Default Value	0

Reverse Disable

Stop drive before changing this parameter.

Enables/disables the function that allows the direction of the motor rotation to be changed. The reverse command may come from a digital command or serial command. All reverse inputs including two-wire Run Reverse will be ignored with reverse disabled.
0 = Disabled
1 = Enabled

Parameter Number	195
Related Parameters	106
Access Rule	GET/SET
Data Type	UINT
Group	Advanced Program Group
Units	—
Minimum Value	0
Maximum Value	1
Default Value	0

Flying Start En

Sets the condition that allows the drive to reconnect to a spinning motor at actual RPM.
0 = Disabled
1 = Enabled

Parameter Number	196
Access Rule	GET/SET
Data Type	UINT
Group	Advanced Program Group
Units	—
Minimum Value	0
Maximum Value	1
Default Value	0

Compensation

Enables/disables correction options that may improve problems with motor instability
0 = Disabled
1 = Electrical (Default)
Some drive/motor combinations have inherent instabilities which are exhibited as non-sinusoidal motor currents. This setting attempts to correct this condition
2 = Mechanical
Some motor/load combinations have mechanical resonances which can be excited by the drive current regulator. This setting slows down the current regulator response and attempts to correct this condition.
3 = Both

Parameter Number	197
Access Rule	GET/SET
Data Type	UINT
Group	Advanced Program Group
Units	—
Minimum Value	0
Maximum Value	3
Default Value	1

SW Current Trip Enables/disables a software instantaneous (within 100 ms) current trip.	Parameter Number	198
	Related Parameters	133
	Access Rule	GET/SET
	Data Type	UINT
	Group	Advanced Program Group
	Units	0.1 A
	Minimum Value	0.0
	Maximum Value	Drive rated amps x 2
	Default Value	0.0 (Disabled)

Process Factor Scales the output frequency value displayed by Parameter 110 (Process Display). Output Freq x Process Factor = Process Display	Parameter Number	199
	Related Parameters	110
	Access Rule	GET/SET
	Data Type	UINT
	Group	Advanced Program Group
	Units	0.1
	Minimum Value	0.1
	Maximum Value	999.9
	Default Value	30.0

Fault Clear Stop drive before changing this parameter. Resets a fault and clears the fault queue. Used primarily to clear a fault over network communications. 0 = Ready/Idle (Default) 1 = Reset Fault 2 = Clear Buffer (Parameters 107…109 [Fault x Code])	Parameter Number	200
	Access Rule	GET/SET
	Data Type	UINT
	Group	Advanced Program Group
	Units	—
	Minimum Value	0
	Maximum Value	2
	Default Value	0

Program Lock Protects parameters against change by unauthorized personnel. 0 = Unlocked 1 = Locked	Parameter Number	201
	Access Rule	GET/SET
	Data Type	UINT
	Group	Advanced Program Group
	Units	—
	Minimum Value	0
	Maximum Value	1
	Default Value	0

Testpoint Sel Used by Rockwell Automation field service personnel.	Parameter Number	202
	Related Parameters	119
	Access Rule	GET/SET
	Data Type	UINT
	Group	Advanced Program Group
	Units	1 Hex
	Minimum Value	0
	Maximum Value	FFFF
	Default Value	400

Comm Data Rate **This parameter is not available for use with the ArmorStart Distributed Motor Controller.**	Parameter Number	203

CommNode Addr **This parameter is not available for use with the ArmorStart Distributed Motor Controller.**	Parameter Number	204

Comm Loss Action Selects the drive's response to a loss of the communication connection or excessive communication errors. 0 = Fault (Default) Drive will fault on an F81 Comm Loss and coast to stop 1 = Coast Stop Stops drive via coast to stop 2 = Stop Stops via Parameter 137 (Stop Mode) setting 3 = Continu Last Drive continues operating at communication commanded speed saved in RAM	Parameter Number	205
	Related Parameters	115, 137, 206
	Access Rule	GET/SET
	Data Type	UINT
	Group	Advanced Program Group
	Units	—
	Minimum Value	0
	Maximum Value	3
	Default Value	0

Comm Loss Time Sets the time that the drive remain in communication loss before implanting the option selected in Parameter 205 (Comm Loss Action).	Parameter Number	206
	Related Parameters	115, 205
	Access Rule	GET/SET
	Data Type	UINT
	Group	Advanced Program Group
	Units	0.1 sec
	Minimum Value	0.1 sec
	Maximum Value	60.0 sec
	Default Value	15.0 sec

Comm Format **This parameter is not available for use with the ArmorStart Distributed Motor Controller.**	Parameter Number	207

Language **This parameter is not available for use with the ArmorStart Distributed Motor Controller.**	Parameter Number	208

Anlg Out Setpnt When parameter 165 (Analog Out Sel) is set to option 18, this sets the percentage of the analog output desired	Parameter Number	209
	Related Parameter	165
	Access Rule	GET/SET
	Data Type	UINT
	Group	Advanced Program Group
	Units	0.1%
	Minimum Value	0.0%
	Maximum Value	100.0%
	Default Value	0.0%

Anlg In 0…10V Lo	Parameter Number	210
Stop drive before changing this parameter.	Related Parameter	121, 134, 138, 222
	Access Rule	GET/SET
Sets the analog input level that corresponds to parameter 134 (Minimum Freq) if a 0…10V input is used by parameter 138 (Speed Reference)	Data Type	UINT
	Group	Advanced Program Group
	Units	0.1%
	Minimum Value	0.0%
	Maximum Value	100.0%
	Default Value	0.0%

Figure 4.6

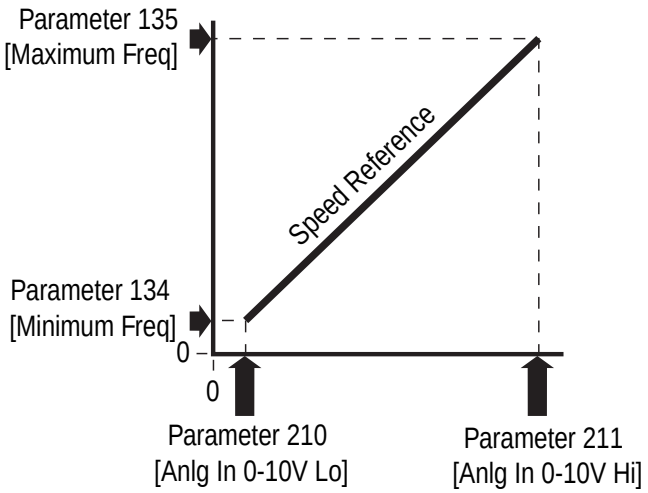

Anlg In 0…10V HI	Parameter Number	211
Stop drive before changing this parameter.	Related Parameter	121, 135, 138, 222, 223
	Access Rule	GET/SET
Sets the analog input level that corresponds to parameter 135 (Maximum Freq) if a 0…10V input is used by parameter 138 (Speed Reference). Analog inversion can be accomplished by setting this value smaller than parameter 210 (Anlg In 0…10V Lo).	Data Type	UINT
	Group	Advanced Program Group
	Units	0.1%
	Minimum Value	0.0%
	Maximum Value	100.0%
	Default Value	0.0%

Anlg In4…20MA LO **This parameter is not available for use with the ArmorStart Distributed Motor Controller.**	Parameter Number	212

Anlg In4…20 mA HI **This parameter is not available for use with the ArmorStart Distributed Motor Controller.**	Parameter Number	213

Slip Hertz @ FLA Compensates for the inherent slip in an induction motor. This frequency is added to the commanded output frequency based on motor current.	Parameter Number	214
	Related Parameter	133
	Access Rule	GET/SET
	Data Type	UINT
	Group	Advanced Program Group
	Units	0.1 Hz
	Minimum Value	0.0 Hz
	Maximum Value	10.0 Hz
	Default Value	2.0 Hz

Process Time Lo Scales the time value when the drive is running at Parameter 134 (Minimum Freq). When set to a value other than zero, Parameter 110 (Process Display) indicates the duration of the process.	Parameter Number	215
	Related Parameters	110, 134
	Access Rule	GET/SET
	Data Type	UNIT
	Group	Advanced Setup
	Units	Hz
	Minimum Value	0.00
	Maximum Value	99.99
	Default Value	0.00

Process Time Hi Scales the time value when the drive is running at Parameter 135 (Maximum Freq). When set to a value other than zero, Parameter 110 (Process Display) indicates the duration of the process.	Parameter Number	216
	Related Parameters	110, 135
	Access Rule	GET/SET
	Data Type	UNIT
	Group	Advanced Setup
	Units	Hz
	Minimum Value	0.00
	Maximum Value	99.99
	Default Value	0.00

Bus Reg Mode Enables the bus regulator. 0 = Disable 1 = Enabled	Parameter Number	217
	Related Parameters	
	Access Rule	GET/SET
	Data Type	UNIT
	Group	Advanced Setup
	Units	—
	Minimum Value	0
	Maximum Value	1
	Default Value	1

Current Limit 2 Maximum output current allowed before current limiting occurs. This parameter is only active if Parameters 151, 152, 153, and 154 (Digital Inx Sel) is set to 25 **Current Lmt2** and is active.	Parameter Number	218
	Related Parameters	133, 151, 152, 153, 154, 189
	Access Rule	GET/SET
	Data Type	UINT
	Group	Advanced Program Group
	Units	0.1 A
	Minimum Value	0.1 A
	Maximum Value	Drive rated amps x 1.8
	Default Value	Drive rated amps x 1.5

Skip Frequency Sets the frequency at which the drive will not operate.	Parameter Number	219
	Related Parameters	220
	Access Rule	GET/SET
	Data Type	UINT
	Group	Advanced Program Group
	Units	0.1 hz
	Minimum Value	0.0
	Maximum Value	400.0 Hz
	Default Value	0.0 Hz

Skip Frq Band Determines the brand width around Parameter 219 (Skip Frequency). Parameter 220 (Skip Frquency) is split applying 1/2 above and 1/2 below the actual skip frequency. A setting of 0.0 disables this parameter.	Parameter Number	220
	Related Parameters	219
	Access Rule	GET/SET
	Data Type	UINT
	Group	Advanced Program Group
	Units	0.1 Hz
	Minimum Value	0.0 Hz
	Maximum Value	30.0 Hz
	Default Value	0.0 Hz

Figure 4.7

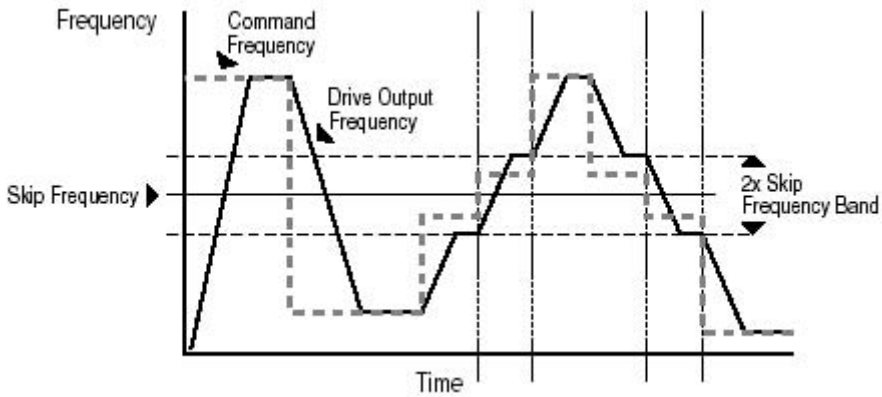

Stall Fault Time	Parameter Number	221
Sets for the fault time that the drive will remain in stall mode before a fault is issued.	Access Rule	GET/SET
0 = 60 sec (Default)	Data Type	UINT
1 = 120 sec	Group	Advanced Program Group
2 = 240 sec	Units	—
3 = 360 sec	Minimum Value	0
4 = 480 sec	Maximum Value	5
5 = **Flt Disabled**	Default Value	0

Analog In Loss	Parameter Number	222
Selects drive action when an input signal loss is detected. Signal loss is defined as an analog signal less than 1V. The signal loss event ends and normal operation resumes when the input signal level is greater than or equal to 1.5V. If using a 0…10V analog input, set parameter 210 (Anlg In 0…10V Lo) to a minimum of 20% (i.e., 2 volts).	Related Parameters	210, 211, 232
	Access Rule	GET/SET
	Data Type	UINT
	Group	Advanced Program Group
	Units	See Table 4.7 for details
	Minimum Value	
	Maximum Value	
	Default Value	

Table 4.7

Options	Description	
0	Disabled (Default)	
1	Fault (F29)	F29 Analog Input Loss
2	Stop	Uses P037 (Stop Mode)
3	Zero Ref	Drive runs at zero speed reference
4	Min Freq Ref	Drive runs at minimum frequency
5	Max Freq Ref	Drive runs at maximum frequency
6	Int Freq Ref	Drive runs at internal frequency

10V Bipolar Enbl	Parameter Number	223
Enables/disables bipolar control. In bipolar mode, direction is commanded by the sign of the reference.	Related Parameters	138, 211
Options	Access Rule	GET/SET
0 = Unipolar In (Default) 0…10V only	Data Type	UINT
1 = Bipolar In +/- 10V	Group	Advanced Program Group
	Units	—
	Minimum Value	0
	Maximum Value	1
	Default Value	0

Var PWM Disable

Stop drive before changing this parameter.

Enables/disables a feature that varies the carrier frequency for the PWM output waveform defined by Parameter 191 (PWM Frequency).
0 = Enabled
1 = Disabled
Disabling this feature when low frequency condition exists may result in IGBT stress and nuisance tripping.

Parameter Number	224
Related Parameters	191
Access Rule	GET/SET
Data Type	UINT
Group	Advanced Program Group
Units	—
Minimum Value	0
Maximum Value	1
Default Value	0

Torque Perf Mode

Stop drive before changing this parameter.

Enables/disables sensorless vector control operation.
0 = V/Hz
1 = Sensrls Vect

Parameter Number	225
Related Parameters	184, 185, 186, 187, 227
Access Rule	GET/SET
Data Type	UINT
Group	Advanced Program Group
Units	—
Minimum Value	0
Maximum Value	1
Default Value	1

Motor NP FLA
Set to the motor nameplate full load amps.

Parameter Number	226
Related Parameters	227
Access Rule	GET/SET
Data Type	UINT
Group	Advanced Program Group
Units	0.1 A
Minimum Value	0.1
Maximum Value	Drive rated amps x 2
Default Value	Drive rated amps

Autotune	Parameter Number	227
Stop drive before changing this parameter.	Related Parameters	225, 226, 228, 229
Provides an automatic method for setting Parameter 228 (IR Voltage Drop) and Parameter 229 (Flux Current Ref), which affect sensorless vector performance. Parameter 226 (Motor NP FLA) must be set to the motor nameplate full load amps before running the Autotune procedure. Provides an automatic method for setting A128 (IR Voltage Drop) and A129 (Flux Current Ref), which affect sensorless vector performance. Parameter A126 (Motor NP FLA) must be set to the motor nameplate full load amps before running the Autotune procedure. 0 = Ready/Idle (Default) 1 = Static Tune 2 = Rotate Tune **Ready (0) —** Parameter returns to this setting following a Static Tune or Rotate Tune. **Static Tune (1) —** A temporary command that initiates a non-rotational motor stator resistance test for the best possible automatic setting of A128 (IR Voltage Drop). A start command is required following initiation of this setting. The parameter returns to Ready (0) following the test, at which time another start transition is required to operate the drive in normal mode. Used when motor cannot be uncoupled from the load. **Rotate Tune (2) —** A temporary command that initiates a Static Tune followed by a rotational test for the best possible automatic setting of A129 (Flux Current Ref). A start command is required following initiation of this setting. The parameter returns to Ready (0) following the test, at which time another start transition is required to operate the drive in normal mode.	Access Rule	GET/SET
	Data Type	UINT
	Group	Advanced Program Group
	Units	—
	Minimum Value	0
	Maximum Value	3
	Default Value	0

Important: Used when motor is uncoupled from the load. Results may not be valid if a load is coupled to the motor during this procedure.

ATTENTION

Rotation of the motor in an undesired direction can occur during this procedure. To guard against possible injury and/or equipment damage, it is recommended that the motor be disconnected from the load before proceeding.

If the Autotune routine fails, an F80 SVC Autotune fault is displayed.

IR Voltage Drop Value of volts dropped across the resistance of the motor stator.	Parameter Number	228
	Related Parameters	227
	Access Rule	GET/SET
	Data Type	UINT
	Group	Advanced Program Group
	Units	0.1V AC
	Minimum Value	0.0
	Maximum Value	230
	Default Value	Based on Drive Rating

Flux Current Ref Value of amps for full motor flux.	Parameter Number	229
	Related Parameter	227
	Access Rule	GET/SET
	Data Type	UINT
	Group	Advanced Program Group
	Units	0.01 A
	Minimum Value	0.00
	Maximum Value	Motor NP Volts
	Default Value	Based on Drive Rating

PID Trim Hi Sets the maximum positive value that is added to a PID reference when PID trim is used.	Parameter Number	230
	Access Rule	GET/SET
	Data Type	UINT
	Group	Advanced Program Group
	Units	0.1
	Minimum Value	0.0
	Maximum Value	400.0
	Default Value	60.0

PID Trim Lo Sets the minimum positive value that is added to a PID reference when PID trim is used.	Parameter Number	231
	Access Rule	GET/SET
	Data Type	UINT
	Group	Advanced Program Group
	Units	0.1
	Minimum Value	0.0
	Maximum Value	400.0
	Default Value	0.1

PID Ref Select Stop drive before changing this parameter. Enables/disables PID mode and selects the source of the PID reference. Valid PID Ref Select for the Bulletin 284 ArmorStart are the following: 0 = PID Disable 1 = PID Setpoint 4 = Comm Port 5 = Setpnt Trim 8 = Comm, Trim	Parameter Number	232
	Related Parameters	138, 222
	Access Rule	GET/SET
	Data Type	UINT
	Group	Advanced Program Group
	Units	—
	Minimum Value	0
	Maximum Value	9
	Default Value	0

PID Feedback Sel Valid PID Feedback Sel command for the Bulletin 284 ArmorStart is the following; 2 = Comm Port	Parameter Number	233
	Access Rule	GET/SET
	Data Type	UINT
	Group	Advanced Program Group
	Units	—
	Minimum Value	0
	Maximum Value	2
	Default Value	0

PID Prop Gain Sets the value for the PID proportional component when the PID mode is enabled by Parameter 232 (PID Ref Sel).	Parameter Number	234
	Access Rule	GET/SET
	Data Type	UINT
	Group	Advanced Program Group
	Units	0.01
	Minimum Value	0.00
	Maximum Value	99.99
	Default Value	0.01

PID Integ Time Sets the value for the PID integral component when the PID mode is enabled by Parameter 232 (PID Ref Sel).	Parameter Number	235
	Access Rule	GET/SET
	Data Type	UINT
	Group	Advanced Program Group
	Units	0.1 sec
	Minimum Value	0.0 sec
	Maximum Value	999.9 sec
	Default Value	0.1 sec

PID Diff Rate Sets the value for the PID differential component when the PID mode is enabled by Parameter 232 (PID Rel Sel).	Parameter Number	236
	Access Rule	GET/SET
	Data Type	UINT
	Group	Advanced Program Group
	Units	0.01 (1/sec)
	Minimum Value	0.00 (1/sec)
	Maximum Value	99.99 (1/sec)
	Default Value	0.01 (1/sec)

PID Setpoint Provides an internal fixed value for process setpoint when the PID mode is enabled by Parameter 232 (PID Ref Sel).	Parameter Number	237
	Access Rule	GET/SET
	Data Type	UINT
	Group	Advanced Program Group
	Units	0.1%
	Minimum Value	0.0%
	Maximum Value	10.0%
	Default Value	0.0%

PID Deadband Sets the lower limit of the PID output.	Parameter Number	238
	Access Rule	GET/SET
	Data Type	UINT
	Group	Advanced Program Group
	Units	0.1%
	Minimum Value	0.0%
	Maximum Value	10.0%
	Default Value	0.0%

PID Preload Sets the value used to preload the integral component on start or enable.	Parameter Number	239
	Access Rule	GET/SET
	Data Type	UINT
	Group	Advanced Program Group
	Units	0.0 Hz
	Minimum Value	0.0 Hz
	Maximum Value	400.0 Hz
	Default Value	0.0 Hz

A240 (Stp Logic 0) **A241 (Stp Logic 1)** **A242 (Stp Logic 2)** **A243 (Stp Logic 3)** **A244 (Stp Logic 4)** **A245 (Stp Logic 5)** **A246 (Stp Logic 6)** **A247 (Stp Logic 7)**	Parameter Number	240…247
	Access Rule	GET/SET
	Data Type	UINT
	Group	Advanced Program Group
	Units	—
	Minimum Value	0001
	Maximum Value	baFF
Stop drive before changing this parameter.	Default Value	00F1

Parameters 240…247 are only active if 138 (Speed Reference) is set to 6 **Stp Logic**.

These parameters can be used to create a custom profile of frequency commands. Each step can be based on time, status of a Logic input, or a combination of time and the status of a Logic input.

Digits 0…3 for each (Stp Logic x) parameter must be programmed according to the desired profile.

A Logic input is established by setting a digital input, Parameters 151…154 (Digital Inx Sel), to 23 **Logic In1** and/or 24 **Logic In2**.

A time interval between steps can be programmed using Parameters 250…257 (Stp Logic Time x). See Table 4.8 for related parameters.

The speed for any step is programmed using Parameters 170…177 (Preset Freq x).

Table 4.8

Step Logic Parameter (Active when 138 = 6 Stp Logic)	Related Preset Frequency Parameter (Can be activated independent of Step Logic Parameters)	Related Step Logic Time Parameter (Active when 240…247 Digit 0 or 1 are set to 1, b, C, d, or E)
240 (Stp Logic 0)	170 (Preset Freq 0)	250 (Stp Logic Time 0)
241 (Stp Logic 1)	171 (Preset Freq 1)	251 (Stp Logic Time 1)
242 (Stp Logic 2)	172 (Preset Freq 2)	252 (Stp Logic Time 2)
243 (Stp Logic 3)	173 (Preset Freq 3)	253 (Stp Logic Time 3)
244 (Stp Logic 4)	174 (Preset Freq 4)	254 (Stp Logic Time 4)
245 (Stp Logic 5)	175 (Preset Freq 5)	255 (Stp Logic Time 5)
246 (Stp Logic 6)	176 (Preset Freq 6)	256 (Stp Logic Time 6)
247 (Stp Logic 7)	177 (Preset Freq 7)	257 (Stp Logic Time 7)

How Step Logic Works

The step logic sequence begins with a valid start command. A normal sequence always begins with 240 (Stp Logic 0).

Digit 0: Logic For Next Step — This digit defines the logic for the next step. When the condition is met the program advances to the next step. Step 0 follows Step 7. Example: Digit 0 is set 3. When **Logic In2** becomes active, the program advances to the next step.

Digit 1: Logic to Jump to a Different Step — For all settings other than F, when the condition is met, the program overrides Digit 0 and jumps to the step defined by Digit 2.

Digit 2: Different Step to Jump — When the condition for Digit 1 is met, the Digit 2 setting determines the next step or to end the program.

Digit 3: Step Settings — This digit defines what accel/decel profile the speed command will follow and the direction of the command for the current step. In addition, if a relay or opto output (Parameters 155, 158, and 161) is set to 15 **StpLogic Out**, this parameter can control the status of that output.

Any Step Logic parameter can be programmed to control a relay or opto output, but you cannot control different outputs based on the condition of different Step Logic commands.

Step Logic Settings

The logic for each function is determined by the four digits for each step logic parameter. The following is a listing of the available settings for each digit. Refer to *Appendix J* for details.

Table 4.9 Digit 3 Settings

Required Setting	Accel/Decel Parameter Used	Step Logic Output State	Commanded Direction
0	Accel/Decel 1	Off	FWD
1	Accel/Decel 1	Off	REV
2	Accel/Decel 1	Off	No Output
3	Accel/Decel 1	On	FWD
4	Accel/Decel 1	On	REV
5	Accel/Decel 1	On	No Output
6	Accel/Decel 2	Off	FWD
7	Accel/Decel 2	Off	REV
8	Accel/Decel 2	Off	No Output
9	Accel/Decel 2	On	FWD
A	Accel/Decel 2	On	REV
b	Accel/Decel 2	On	No Output

Table 4.10 Digit 2 Settings

0	Jump to Step 0
1	Jump to Step 1
2	Jump to Step 2
3	Jump to Step 3
4	Jump to Step 4
5	Jump to Step 5
6	Jump to Step 6
7	Jump to Step 7
8	End Program (Normal Stop)
9	End Program (Coast to Stop)
A	End Program and Fault (F2)

Table 4.11 Digit 1 and Digit 0 Settings

0	Skip Step (Jump Immediately)
1	Step Based on (Stp Logic Time x)
2	Step if Logic In1 is Active
3	Step if Logic In2 is Active
4	Step if Logic In1 is Not Active
5	Step if Logic In12 is Not Active
6	Stop if either Logic In1 and Logic In2 is Active
7	Stop if both Logic In1 and Logic In2 is Active
8	Stop if neither Logic In1 and Logic In2 is Active
9	Step if Logic In1 is Active and Logic In2 is Not Active
A	Step if Logic In2 is Active and Logic In1 is Not Active
b	Step after (Stp Logic Time x) and Logic In1 is Active
C	Step after (Stp Logic Time x) and Logic In2 is Active
d	Step after (Stp Logic Time x) and Logic In1 is Not Active
E	Step after (Stp Logic Time x) and Logic In2 is Not Active
F	Do Not Stop/Ignore Digit 2 Settings

A250 (Stp Logic Time 0) **A251 (Stp Logic Time 1)** **A252 (Stp Logic Time 2)** **A253 (Stp Logic Time 3)** **A254 (Stp Logic Time 4)** **A255 (Stp Logic Time 5)** **A256 (Stp Logic Time 6)** **A257 (Stp Logic Time 7)** Sets the time to remain in each step if the corresponding StpLogic command is set to Step after Time.	Parameter Number	250…257
	Related Parameters	138, 155, 158, 161, 171…177, 240…247
	Access Rule	GET/SET
	Data Type	UINT
	Group	Advanced Program Group
	Units	0.1 sec
	Minimum Value	0.0 sec
	Maximum Value	999.9 sec
	Default Value	30.0 sec

EM Brk Off Delay Sets the time the drive will remain at minimum frequency before ramping to the commanded frequency and energizing the brake coil relay when Parameter 137 (Stop Mode) is set to option 8 or 9.	Parameter Number	260
	Related Parameters	137
	Access Rule	GET/SET
	Data Type	UNIT
	Group	Advanced Setup
	Units	0.01 sec
	Minimum Value	0.01 sec
	Maximum Value	10 sec
	Default Value	0.0 sec

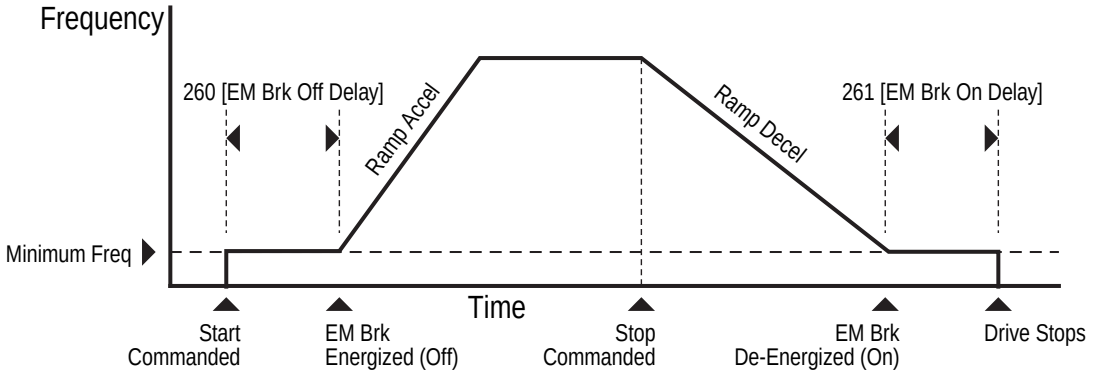

EM Brk On Delay Sets the time the drive will remain at minimum frequency before stopping and de-energizing the brake coil relay when Parameter 137 (Stop Mode) is set to option 8 or 9.	Parameter Number	261
	Related Parameters	137
	Access Rule	GET/SET
	Data Type	UNIT
	Group	Advanced Setup
	Units	0.01 sec
	Minimum Value	0.01 sec
	Maximum Value	10.00 sec
	Default Value	0.0 sec

MOP Reset Sel Sets the drive to save the current MOP Reference command. 0 = Zero MOP Ref This option clamps Parameter 169 (Internal Freq) at 0.0 Hz when drive is not running. 1 = Save MOP Ref (Default) Reference is saved in Parameter 169 (Internal Freq).	Parameter Number	262
	Related Parameters	169
	Access Rule	Get/Set
	Data Type	UINT
	Group	Advanced Program Group
	Units	—
	Minimum Value	0
	Maximum Value	1
	Default Value	0

DB Threshold Sets the DC bus Voltage Threshold for Dynamic Brake operation. If the DC bus voltage falls below the value set in this parameter, the Dynamic Brake will not turn on. Lower values will make the Dynamic Braking function more responsive, but may result in nuisance Dynamic Brake activation.	Parameter Number	263
	Access Rule	GET/SET
	Data Type	UINT
	Group	Advanced Program Group
	Units	—
	Minimum Value	0.0%
	Maximum Value	110.0%
	Default Value	100%

HOA Keypad Operation

Introduction

This chapter provides a basic understanding of the programming of the factory-installed optional built-in Hand/Off/Auto (HOA) keypad. The HOA keypad can be programmed for maintained or momentary operation.

Figure 5.1 Optional HOA Keypads

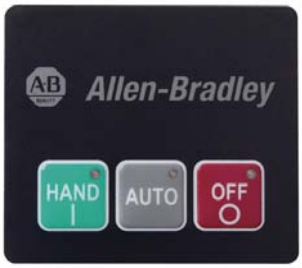

Available on Bulletin 280

Available on Bulletin 281

Available on Bulletin 284

Keypad Description

The keys found on the optional HOA keypads are described below:

Table 5.1 HOA Keypad — Key Description

	HAND	The Hand key will initiate starter operation
	AUTO	The Auto key allows for Start/Stop control via the communications network
	OFF	If the starter is running, pressing the OFF key will cause the starter to stop.
	REV	The REV key selects reverse direction of the motor
	FWD	The FWD key selects forward direction of the motor
	DIR Arrow	The Dir arrow selects the direction of the motor, either forward or reverse.
	JOG	When pressed, JOG will be initiated if no other control devices are sending a stop command. Releasing the key will cause the drive to stop, using selected stop mode.

Figure 5.2 Bulletin 280 Hand -Off-Auto Selector Keypad

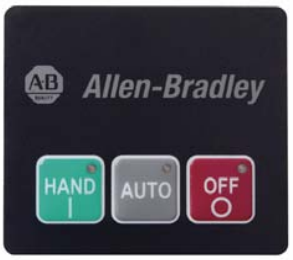

The following state transition matrix summarizes the HOA Keypad when parameter 45 “Keypad Mode” is set to 1=momentary.

	HAND STOP	HAND FWD	AUTO
AUTO	Command motor off and Transition to “AUTO”	Ignore	Ignore
HAND	Command motor ON and Transition to “HAND FWD”	Ignore	Ignore
OFF	Ignore	Command motor OFF and transition to “HAND STOP”	Command motor off and transition to “HAND STOP”

The following state transition matrix summarizes the HOA Keypad when parameter 45 “Keypad Mode” is set to 0=maintained.

	HAND STOP	HAND FWD	AUTO
NO KEY PRESSED	Ignore	Command motor off and transition to “HAND STOP”	Ignore
AUTO	Command motor off and Transition to “AUTO”	Ignore	Ignore
HAND	Command motor ON and transition to “HAND FWD”	Ignore	Ignore
OFF	Ignore	Command motor off and transition to “HAND STOP”	Command motor off and Transition to “HAND STOP”

Figure 5.3 Bulletin 281 Hand-Off-Auto Selector Keypad with Forward/Reverse Function

The following state transition matrix summarizes the HOA behavior when parameter 45 “Keypad Mode” is set to 1=momentary

	HAND STOP	HAND FWD	HAND REV	AUTO
FWD	Set FWD LED	Ignore	Ignore	Set FWD LED
REV	Set REV LED	Ignore	Ignore	Set REV LED
AUTO	Command motor off and Transition to “AUTO”	Ignore	Ignore	Ignore
HAND	If (FWD LED) transition to “HAND FWD” If (REV LED) Transition to “HAND REV”	Ignore	Ignore	Ignore
OFF	Ignore	Command motor off and transition to “HAND STOP”	Command motor off and transition to “HAND STOP”	Command motor off and Transition to “HAND STOP”

The following state transition matrix summarizes the HOA behavior when parameter 45 “Keypad Mode” is set to 0=maintained

	HAND STOP	HAND FWD	HAND REV	AUTO
NO KEY PRESSED	Ignore	Command motor off and transition to “HAND STOP”	Command motor off and transition to “HAND STOP”	Ignore
FWD	Set FWD LED	Ignore	Ignore	Set FWD LED
REV	Set REV LED	Ignore	Ignore	Set REV LED
AUTO	Command motor off and Transition to “AUTO”	Ignore	Ignore	Ignore
HAND	If (FWD LED) transition to “HAND FWD” If (REV LED) Transition to “HAND REV”	Ignore	Ignore	Ignore
OFF	Ignore	Command motor off and transition to “HAND STOP”	Command motor off and transition to “HAND STOP”	Command motor off and transition to “HAND STOP”

Figure 5.4 Bulletin 284 Hand-Off-Auto Selector Keypad with JOG and Direction Arrow Functions

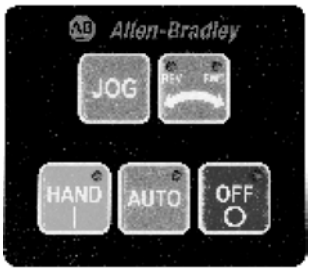

The following state transition matrix summarizes the Jog/HOA behavior when Parameter 45, Keypad Mode, is set to 1 = momentary.

	HAND STOP	HAND FWD	HAND REV	JOG FWD	JOG REV	AUTO
	If (FWD LED) Set REV LED Else If (REV LED) Set FWD LED	If (FWD LED) Set REV LED Else If (REV LED) Set FWD LED	If (FWD LED) Set REV LED Else If (REV LED) Set FWD LED	Ignore	Ignore	Ignore
JOG	If (FWD LED) transition to JOG FWD If (REV LED) Transition to JOG REV	Ignore	Ignore	Ignore	Ignore	Ignore
AUTO	Command motor off and Transition to AUTO	Ignore	Ignore	Ignore	Ignore	Ignore
HAND	If (FWD LED) transition to HAND FWD Else If (REV LED) Transition to HAND REV	Ignore	Ignore	Ignore	Ignore	Ignore
No Key Pressed	Ignore	Ignore	Ignore	Command motor off and transition to HAND STOP	Command motor off and transition to HAND STOP	Ignore
OFF	Ignore	Command motor off and transition to HAND STOP	Command motor off and transition to HAND STOP	Command motor off and transition to HAND STOP	Command motor off and transition to HAND STOP	Command motor off and Transition to HAND STOP

The following state transition matrix summarizes the Jog/HOA behavior when Parameter 45 Keypad Mode is set to 0 = maintained.

	HAND STOP	HAND FWD	HAND REV	JOG FWD	JOG REV	AUTO
No Key Pressed	Ignore	Command motor off and transition to HAND STOP	Command motor off and transition to HAND STOP	Command motor off and transition to HAND STOP	Command motor off and transition to HAND STOP	Ignore
	If (FWD LED) Set REV LED Else If (REV LED) Set FWD LED	Ignore	Ignore	Ignore	Ignore	Ignore
JOG	If (FWD LED) transition to JOG FWD If (REV LED) Transition to JOG REV	Ignore	Ignore	Ignore	Ignore	Ignore
AUTO	Command motor off and Transition to AUTO	Ignore	Ignore	Ignore	Ignore	Ignore
HAND	If (FWD LED) transition to HAND FWD If (REV LED) Transition to HAND REV	Ignore	Ignore	Ignore	Ignore	Ignore
OFF	Ignore	Command motor off and transition to HAND STOP	Command motor off and transition to HAND STOP	Command motor off and transition to HAND STOP	Command motor off and transition to HAND STOP	Command motor off and transition to HAND STOP

Keypad Disable and HOA

Parameter 46 “Keypad Disable”, disables the “HAND”, “FWD” and “REV” buttons on the HOA keypad. The “OFF” and “AUTO” buttons are always enabled, even if parameter 46 is set to “1=disable”.

Note: In nearly all instances, if the processor detects multiple buttons are pressed at the same time, the software interprets this as a “no button pressed” condition. The only exception to this rule is if multiple buttons are pressed and one of them is the “OFF” button. If the “OFF” button is pressed in combination with any combination of other buttons, the processor will interpret this the same as if the “OFF” button were pressed by itself.

Notes:

DeviceNet™ Commissioning

This chapter refers to Bulletin 280D/281D and 284D products.
Establishing a DeviceNet Node Address

The ArmorStart® is shipped with a default node address of 63 and Autobaud enabled. Each device on a DeviceNet network must have a unique node address or MAC ID which can be set to a value from 0 to 63. Keep in mind that most DeviceNet systems use address 0 for the master device (Scanner) and node address 63 should be left vacant for introduction of new slave devices. The ArmorStart offers two methods for node commissioning as shown below.

The node address for a device can be changed using software or by setting hardware switches that reside on the back of the control module. While both methods yield the same result, it is good practice to choose one method and deploy it throughout the system.

Node Commissioning using Hardware

The ArmorStart is shipped with the hardware rotary switches set to a value of (99). If the switches are set to a value (64) or above, the device will automatically configure itself to the software node address. If the switches are set to a value of (63) or less, the device will be at the node address designated by the switch configuration.

To set an address using the hardware rotary switches, simply set the switches to the desired node address and cycle power to the unit. The Device will re-start at the new address.

Figure 6.1 Rotary Node Address Configuration

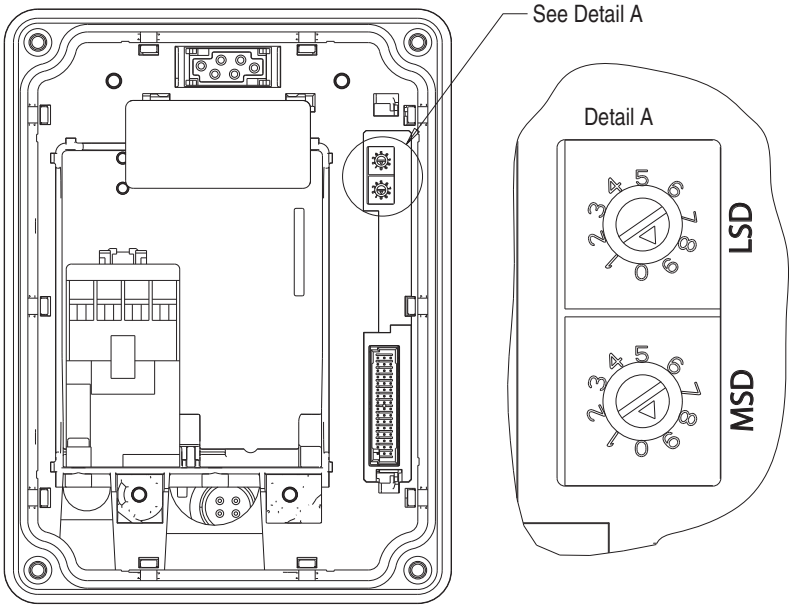

Node Commissioning using Software

To set the node address of the ArmorStart using software or other handheld tools, leave the hardware switches in there default position (99) or insure that they are set to something greater than (63). With the hardware switches set, use the software or handheld tool to change the address.

To begin the configuration of ArmorStart using software, execute the RSNetWorx™ software and complete the following procedure. You must use RSNetWorx Revision 3.21 Service Pack 2 or later.

1. Go on-line using RSNetWorx for DeviceNet. This can be accomplished by selecting the ***Network*** menu, and then choosing ***Online***.
2. Choose the appropriate DeviceNet PC interface. In this example, a **1784-PCIDS** module is chosen. Other common DeviceNet interfaces are the 1770-KFD, and 1784-PCD.

Note: DeviceNet drivers must be configured using RSLinx prior to being available to RSNetWorx.

3. Click ***OK***.
4. RSNetWorx will notify the user to upload or download devices before viewing configuration. Click ***OK***.
5. RSNetWorx will now browse the network and display all of the nodes it has detected on the network. For some versions of RSNetWorx software the ArmorStart EDS files and icon may not be included and will show up as an “Unregistered Device”. If the screen appears like the example below, continue with ***Building and Registering an EDS file.***

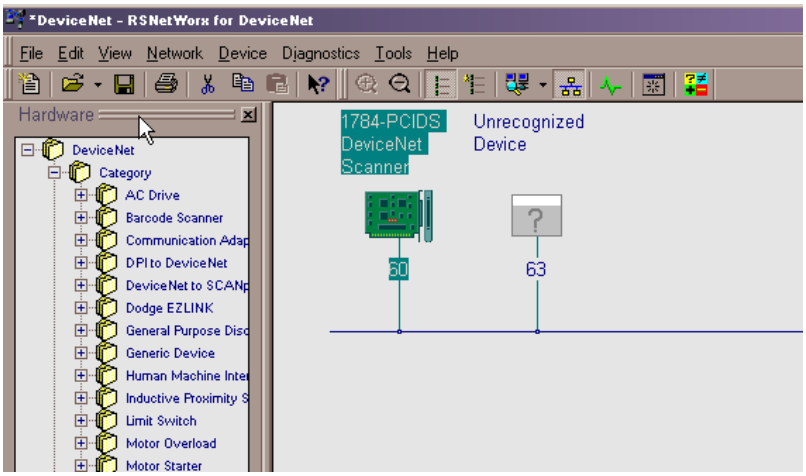

6. If RSNetWorx recognizes the device as an ArmorStart, skip ahead to the following section Changing the Node address (MAC ID)

Building and Registering an EDS File

The EDS file defines how RSNetWorx for DeviceNet will communicate to the ArmorStart. Follow the steps below to build and register the EDS file.

To register a device you must first obtain the EDS file from the following web page: ***http://www.ab.com/networks/eds***

After obtaining the files do the following:

1. Right mouse click on the “Unrecognized Device” icon and choose ***Register Device*** from the menu.
2. Click ***Next***. The following screen appears:

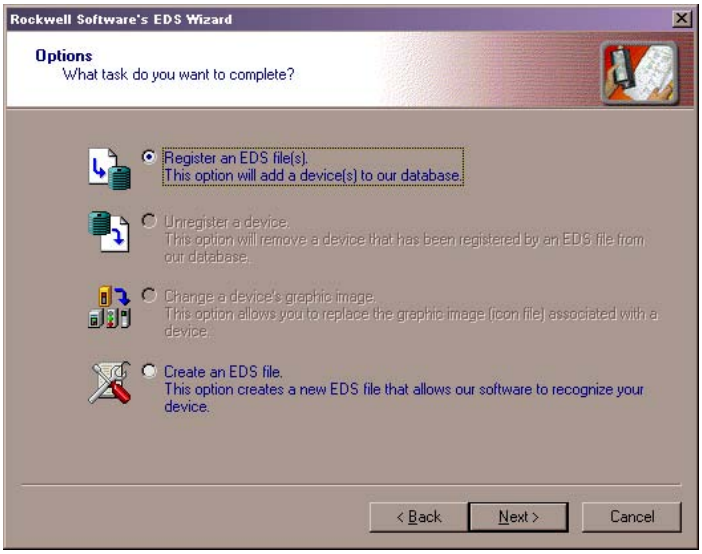

3. Choose “Register an EDS file(s)” as shown above and then click the ***Next*** button.
4. Choose to “Register a single file” and specify the file name or use the ***Browse*** button to locate the EDS file on your computer. If connected to the Internet you may use the ***Download EDS file*** button to automatically search for the correct EDS file.

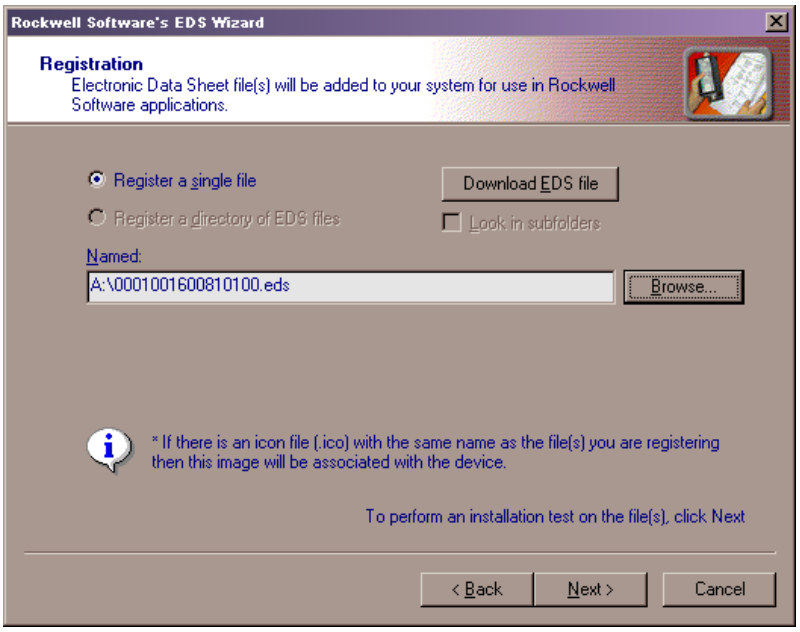

5. Click the ***Next*** button.

6. The following screen will display any warning or errors if a problem occurs while registering the file. If a problem occurs insure that you have the correct file and try again. Click the ***Next*** button when no errors occur.

7. Select an alternative icon by highlighting the new device and clicking ***Change Icon***. Once you have selected an icon, choose ***OK*** and then click the ***Next*** button

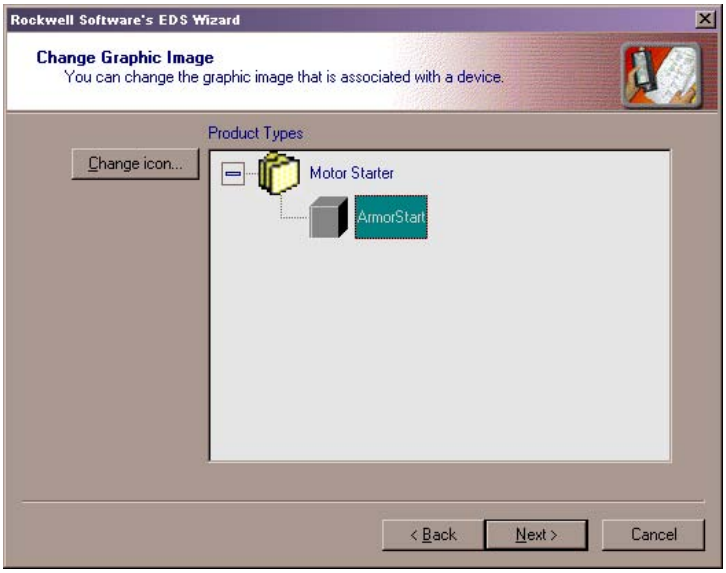

8. When asked if you would like to register this device, click the ***Next*** button.

9. Click the ***Finish*** button. After a short while RSNetWorx will update your online screen by replacing the unrecognized device with the name and icon given by the EDS file you have just registered.

Using the Node Commissioning Tool Inside RSNetWorx for DeviceNet

1. Choose "***Node Commissioning***" from the "**Tools**" menu at the top of the screen.
2. Clicking on ***Browse…*** will prompt a screen similar to the one below to appear.

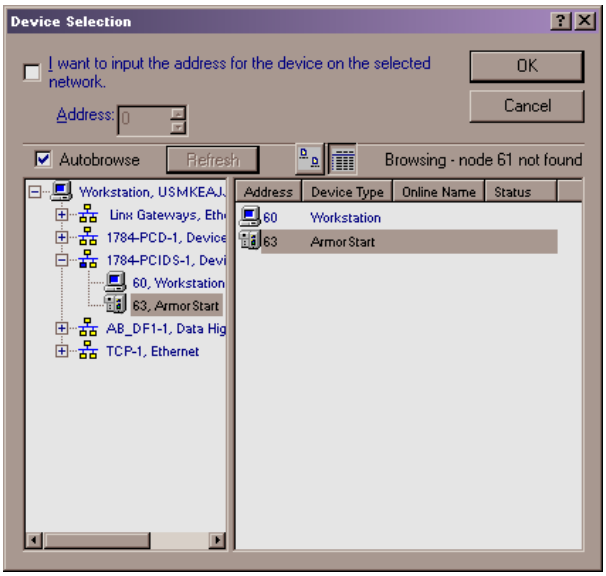

3. Select the ArmorStart located at node 63, and then click ***OK***. The node commissioning screen will have the "Current Device Settings" entries completed. It will also provide the current network baud rate in the "New ArmorStart Settings" area. Do not change the baud rate unless you absolutely sure that this value needs to be changed.
4. Enter the desired node address in the "New Device Settings" section. In this example, the new node address is **5**. Click ***Apply*** to apply the new node address.

5. When the new node address has been successfully applied, the "Current Device Settings" section of the window is updated as follows. If an error occurs, check to make sure the device is properly powered up and connected to the network.

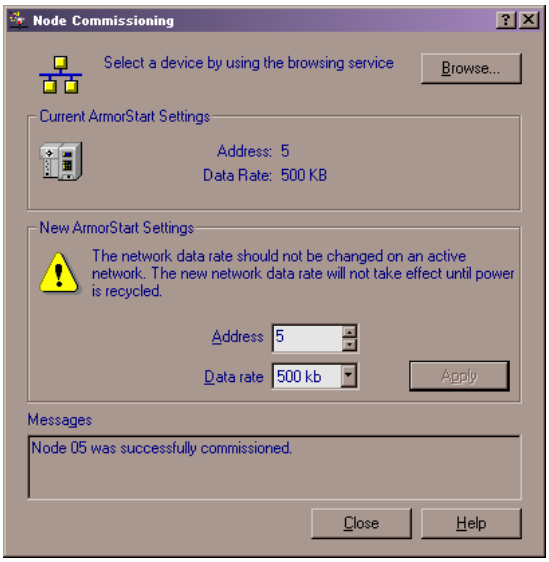

6. Click ***Close*** to exit the node commissioning tool.

7. Choose "**Single Pass Browse**" from the "**Network**" menu to update RSNetWorx and verify that the node address is set correctly.

System Configuration

Selection of produced and consumed I/O assemblies (sometimes referred to as input and output assemblies) define the format of I/O message data that is exchanged between the ArmorStart and other devices on the network. The consumed information is generally used to command the state of its outputs, and produced information typically contains the state of the inputs and the current fault status of the device.

The default consumed and produced assemblies are shown below; for additional formats refer to Appendix B, page B-1. The ArmorStart default configuration varies depending on the type of starter.

Choosing the size and format of the I/O data that is exchanged by the ArmorStart is done by choosing a consumed assembly instance number. This instance number is written to the *Consumed IO Assy* parameter. The different instances/formats allow user programming flexibility and network optimization.

Important: The *Consumed and Produced IO Assy* parameter values can not be changed while the ArmorStart is online with a scanner. Any attempts to change the value of this parameter while online with a scanner will result in the error message "Object State Conflict".

Using Automap feature with default Input and Output (I/O) Assemblies

The Automap feature available in all Rockwell Automation scanners will automatically map the information as shown below. If manual mapping is not required, the information below can be used to map a device based on the default configuration.

Table 6.1 Default Input and Output (I/O) Assemblies

	Default
Message type	Polled
Consumed data size	1 byte (Rx)
Produced data size	2 bytes (Tx)

Default Input and Output (I/O) Assembly Formats

The I/O assembly format for the ArmorStart is identified by the value in parameter 11 (Consumed IO Assy.) and parameter 12 (Produced IO Assy.). These values determine the amount and arrangement of the information communicated to the master scanner. The tables below identify the default information produced and consumed by the standard starter. For additional formats and advance configurations please reference Table B.11 on page B-5.

Table 6.2 Instance 160 — Default Consumed Data for Standard Distributed Motor Controller (1 byte)

Byte	Bit 7	Bit 6	Bit 5	Bit 4	Bit 3	Bit 2	Bit 1	Bit 0
0	User Out B	User Out A	Not Used	Not Used	Not Used	Fault Reset	Run Rev	Run Fwd

Table 6.3 Instance 161 — Default Produced Data for Standard Distributed Motor Controller (2 bytes)

Byte	Bit 7	Bit 6	Bit 5	Bit 4	Bit 3	Bit 2	Bit 1	Bit 0
0	Not Used	Not Used	Not Used	Ready	Running Rev	Running Fwd	Warning	Tripped
1	Not Used	Not Used	140M On	HOA Status	User In 3	User In 2	User In 1	User In 0

Setting the Motor FLA and Overload Trip Class (Bulletin 280/281)

The product should now be configured and communicating on the network. The last step is to program the motor FLA setting (parameter# 106) and overload trip class (parameter# 107). This can be accomplished by using software such as RSNetWorx for DeviceNet or another handheld DeviceNet tool.

Using the software, access the device parameters screen as shown below. Notice that by default the motor FLA is set to the minimum FLA setting for the device and the overload trip class is set to 10.

Select **FLA setting** (parameter #106) and enter a value that corresponds to the FLA of the motor connected to the ArmorStart. Make sure the ***single*** radio button is selected and then select ***Download to Device***.

Select **Overload Class** (parameter #107) and choose the overload trip class to be used with the motor connected to the ArmorStart. The ArmorStart can be set up for trip class 10, 15, or 20. Make sure the ***Single*** radio button is selected and then select ***Download to Device***.

The proper motor protection is now in place.

Figure 6.2 RSNetWorx Parameter Screen

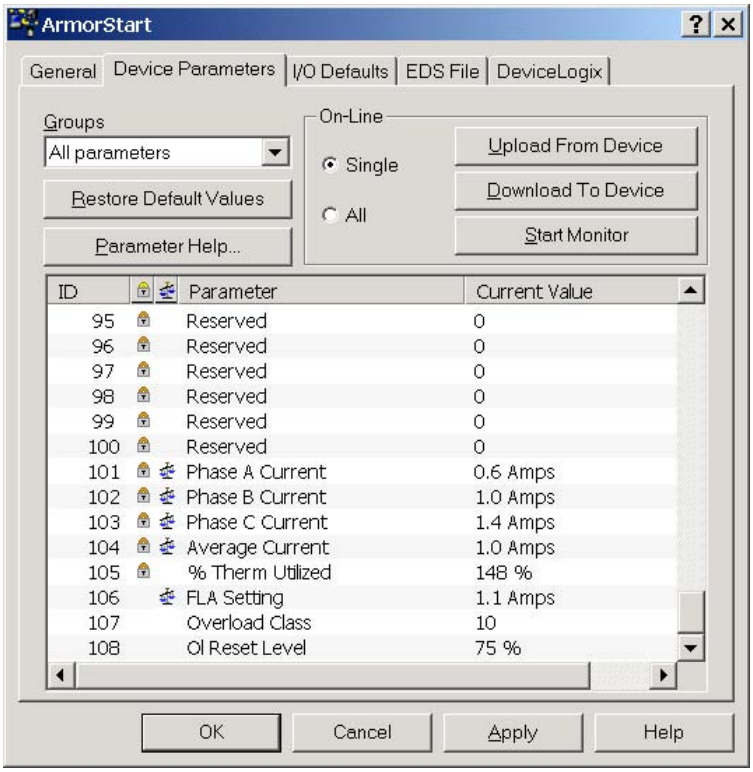

Setting the Motor FLA (Bulletin 284)

The product should now be configured and communicating on the network. The last step is to program the proper motor OL current setting (Parameter 133). This can be accomplished by using software such as RSNetWorx for DeviceNet or a handheld DeviceNet tool.

Use the software to access the device parameters screen. By default the motor OL current is set to the minimum motor OL current setting for the device. Set this parameter to the desired value and download to the device.

Select ***Motor OL Current*** (Parameter 133) and enter a value that corresponds to the FLA of the motor connected to the ArmorStart. Make sure the ***Single*** radio button is selected and then select ***Download to Device***.

The proper motor protection is now in place.

Figure 7 RSNetWorx Parameter Screen

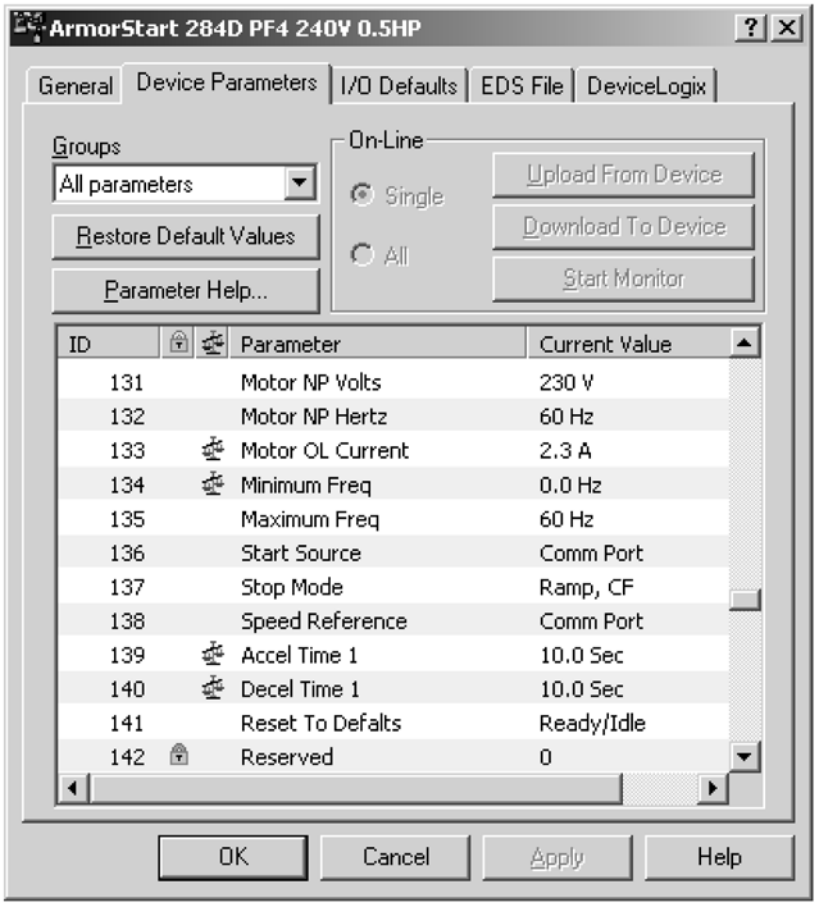

Notes:

Explicit Messaging on DeviceNet™

Logic Controller Application Example with Explicit Messaging

This chapter is designed to demonstrate programming and explicit message examples for both the SLC™ family of programmable controllers and ControlLogix® family of programmable controllers. The examples will show how to develop a program for simple control and use a simple explicit message to retrieve data that is not automatically acquired based on the input and output assembly of the device. The user of the device can use this example as a guide in developing, their own programs.

Below is the RSNetWorx™ view of the simple network used in this example.

Figure 7.1 Simple Network

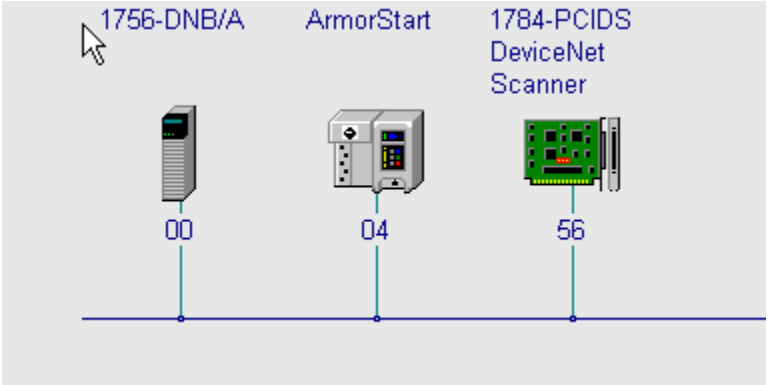

To assist in the development of the example the network will consist only of the ArmorStart® and scanner. Therefore the only mapped information in the scanner will be the ArmorStart. Refer to *Chapter 6, DeviceNet™ Commissioning* for assistance in mapping.

Programming the 1747-SLC

I/O Mapping

The following example will utilize the Standard Distributed Motor Controller and the factory default input and output assembly of 160 and 161. Refer to *Appendix B, Bulletin 280/281 CIP Information* for additional assembly formats. The default input and output assemblies are shown in the table below with the corresponding data size.

Table 7.1 Message Type (I/O Assembly)

	Data Size (bytes)
Instance 160 – Consumed (output)	1 (Rx)
Instance 161 – Produced (input)	2 (Tx)

If a different I/O assembly is selected, the data size may change. It is important to understand that the I/O assembly selected here will directly affect the input and output mapping in the scanner's scanlist and the amount of Programmable Logic Controller (PLC) memory reserved for this information.

Table 7.2 Example SLC Input Addressing (Produced Assembly)

Instance 161 Default Produced Standard Distributed Motor Controller								
Byte 0	**Bit 7**	**Bit 6**	**Bit 5**	**Bit 4**	**Bit 3**	**Bit 2**	**Bit 1**	**Bit 0**
Address	I:1.23	I:1.22	I:1.21	I:1.20	I:1.19	I:1.18	I:1.17	I:1.16
Data	reserved	Reserved	reserved	Ready	Running Rev	Running Fwd	Warning	Tripped
Byte 1	Bit 15	Bit 14	Bit 13	Bit 12	Bit 11	Bit 10	Bit 9	Bit 8
Address	I:1.31	I:1.30	I:1.29	I:1.28	I:1.27	I:1.26	I:1.25	I:1.24
Data	reserved	Reserved	140M On	HOA	User In 3	User In 2	User In 1	User In 0

Table 7.3 Example SLC Output Addressing (Consumed Assembly)

Instance 160 Default Consumed Standard Distributed Motor Controller								
Byte	**Bit 7**	**Bit 6**	**Bit 5**	**Bit 4**	**Bit 3**	**Bit 2**	**Bit 1**	**Bit 0**
Address	O:1.23	O:1.22	O:1.21	O:1.20	O:1.19	O:1.18	O:1.17	O:1.16
Data	User Out B	User Out A	reserved	reserved	reserved	Fault Reset	Run Rev	Run Fwd

The example PLC program for the SLC will use the "Tripped" and the "140M On" bit from the produced assembly and the "Fault Reset", "User Out A", and "Run Fwd" bit from the consumed assembly.

Explicit Messaging with SLC

The 1747-SDN module uses the M0 and M1 file areas for data transfer. Only words 224 through 256 are used to execute the Explicit Message Request and Response function. The minimum data size for the explicit message request is 6 words and the maximum is 32 words. The following tables illustrate the standard format of the explicit message request and response.

Table 7.4 Explicit Message Request (Get_Attribute_Single)

Bit location within Word		
15 … 8	**7 … 0**	
TXID	COMMAND	Word - 0
PORT	SIZE	Word - 1
SERVICE	MAC ID	Word - 2
CLASS		Word - 3
INSTANCE		Word - 4
ATTRIBUTE		Word - 5

Table 7.5 Explicit Message Response (Get_Attribute_Single)

Bit location within Word		
15 … 8	**7 … 0**	
TXID	STATUS	Word - 0
PORT	SIZE	Word - 1
SERVICE	MAC ID	Word - 2
DATA		Word - 3

- Transmission ID (TXID):
  The scanner uses this value to track the transaction to completion, and returns the value with the response that matches the request downloaded by the SLC-500 processor. The TXID data size is one byte.
- Command:
  This code instructs the scanner how to administer the request. A listing of these codes can be found in the 1747-SDN User Manual, Publication 1747-5.8. The Command data size is one byte.
- Status:
  The Status code provides the communication module's status and its response.
- Port:
  The physical channel of the scanner where the transaction is to be routed. The port setting can be zero (channel A) or one (channel B). The Port data size is one byte. Please note that the 1747-SDN has only one channel, and so this value is always set to zero.
- Size:
  This identifies the size of the transaction body in bytes. The transaction body begins at word 3. The maximum size is 58 bytes. The Size data size is one byte.
- Service:
  This code specifies the type of request being delivered. The Service data size is one byte.
- MAC ID:
  The DeviceNet™ network node address of the device for which the transaction is intended is identified here. The slave device must be listed in the scanner module's scan list and be on-line for the explicit message transaction to be completed.
- Class:
  The desired DeviceNet class is specified here.

- Instance:
  This code identifies the specific instance within the object class towards which the transaction is directed. The value zero is reserved to denote that the transaction is directed towards the class itself versus a specific instance within the class.
- Attribute:
  This code identifies the specific characteristic of the object towards which the transaction is directed. The attribute data size is one word.

Setting up the Data File

The following table lists the most common transaction types (get information and set information), and the appropriate service, class, instance, and attribute that corresponds to the type.

Table 7.6 Common Configuration Examples for ArmorStart

Transaction Type	Service ①	Class ①	Instance ①	Attribute ①
Get_Attribute_Single	0x0E	0x0F	Par. # ②	1 ③
Set_Attribute_Single	0x10	0x0F	Par. # ②	1 ③

① The numeric values are in a hexadecimal format.
② This is the actual parameter number.
③ The code “1” specifies the value of the instance (parameter).

Sequence of Events

Use the following sequence of events as a guide for establishing explicit messages in your SLC ladder logic.

1. Put the explicit message request data into an integer (N) file of the SLC-500 processor.
2. Use the file copy instruction (COP) to copy the explicit message request data entered in step 1 to the M0 File, words 224 through 256.
3. Use the examine-if-closed instruction (XIC) to monitor bit 15 of the scanner’s module status register for an indication that it has received a response from the ArmorStart.
4. Copy the data from the M1 file, words 224 through 256, into a file in the SLC-500 processor using the file copy instruction (COP).

The following example shows the exact data format to perform a “Get Attribute Single” request. This message will specifically access parameter 104, *Average Current*. The first three words are shown segmented into two bytes, corresponding to the upper and lower bytes shown in the explicit message request table (Table 7.4).

Note: The data in the table is shown in a hexadecimal format. Therefore *parameter 104 decimal* is equal to *68 hexadecimal* (0x68).

Table 7.7 Get_Attribute_Single Request

	TXID	Command	Port	Size	Service	MAC ID	Class	Instance	Attribute		
Word	0		1		2		3	4	5	6	7
N7:x	01	01	00	06	0E	04	000F	0068	0001	—	—

Table 7.8 Get_Attribute_Single Response

	TXID	Status	Port	Size	Service	MAC ID	Data				
Word	10		11		12		13	14	15	16	17
N7:x	01	xx	00	06	0E	04	x	—	—	—	—

Figure 7.2 SLC Example of Ladder Logic Program

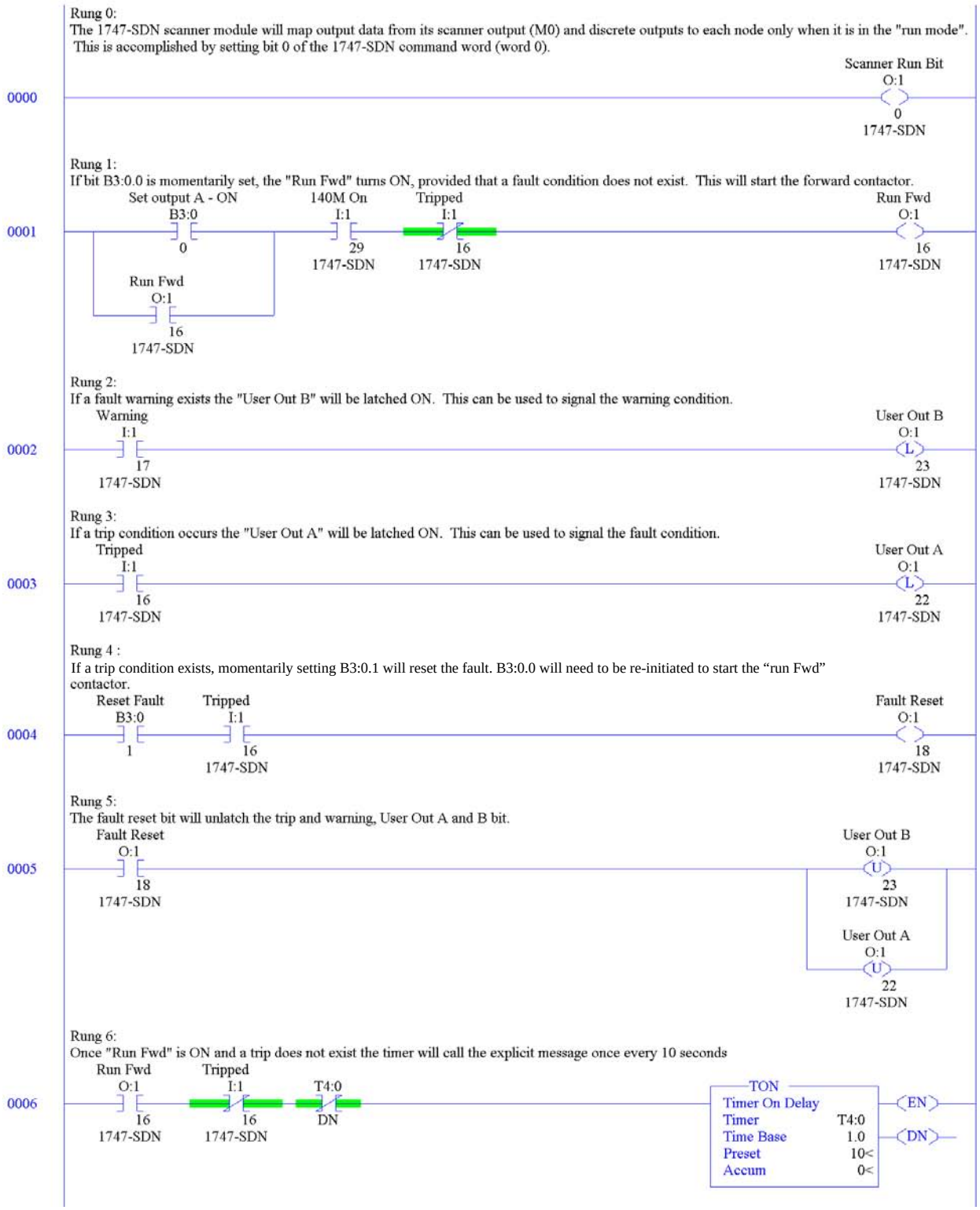

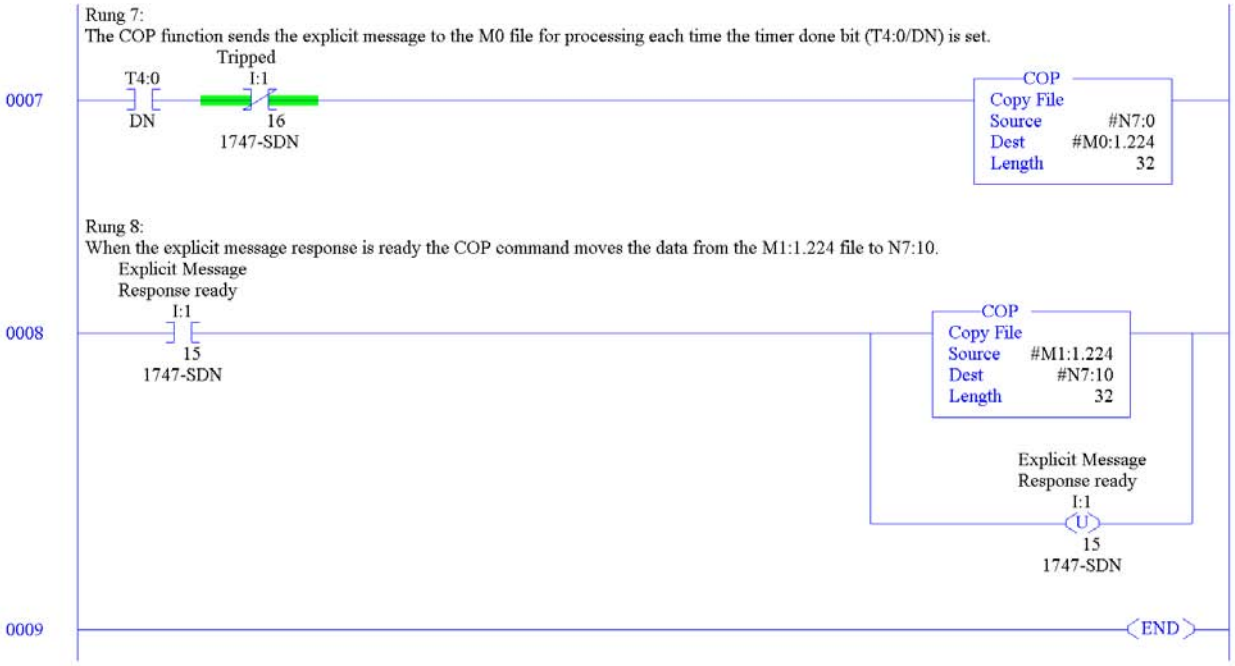

Programming the 1756-ControlLogix

I/O Mapping

The following example will use the standard distributed motor controller and the factory default input and output assembly of 160 and 161. Refer to Appendix B for additional assembly formats. The default input and output assembly will again be used in the following example.

Note: The addressing is different between the SLC 1747 and ControlLogix 1756 program. It is important that the user understand how to create and use “tags” in order to properly follow the example. Please see the RSLogix™ 5000 programming manual for additional help with defining tags.

The tables below list the data configuration for the ControlLogix platform and include the tag name as used in the example program.

Table 7.9 Example ControlLogix Input Addressing (Produced Assembly)

Instance 161 Default Produced Standard Distributed Motor Controller								
Byte 0	**Bit 7**	**Bit 6**	**Bit 5**	**Bit 4**	**Bit 3**	**Bit 2**	**Bit 1**	**Bit 0**
Address	Local:1:I. Data[1].7	Local:1:I. Data[1].6	Local:1:I. Data[1].5	Local:1:I. Data[1].4	Local:1:I. Data[1].3	Local:1:I. Data[1].2	Local:1:I. Data[1].1	Local:1:I. Data[1].0
Tag Name	—	—	—	—	—	—	Status_ warning	Status_ tripped
Data	reserved	reserved	reserved	Ready	Running Rev	Running Fwd	Warning	Tripped
Byte 1	Bit 15	Bit 14	Bit 13	Bit 12	Bit 11	Bit 10	Bit 9	Bit 8
Address	Local:1:I. Data[1].15	Local:1:I. Data[1].14	Local:1:I. Data[1].13	Local:1:I. Data[1].12	Local:1:I. Data[1].11	Local:1:I. Data[1].10	Local:1:I. Data[1].9	Local:1:I. Data[1].8
Tag Name	—	—	Status_140M	—	—	—	—	—
Data	reserved	reserved	140M On	HOA	User In 3	User In 2	User In 1	User In 0

Table 7.10 Example ControlLogix Output Address (Consumed Assembly)

Instance 160 Default Consumed Standard Distributed Motor Controller								
Byte 0	**Bit 7**	**Bit 6**	**Bit 5**	**Bit 4**	**Bit 3**	**Bit 2**	**Bit 1**	**Bit 0**
Address	Local:1:O. Data[1].7	Local:1:O. Data[1].6	Local:1:O. Data[1].5	Local:1:O. Data[1].4	Local:1:O. Data[1].3	Local:1:O. Data[1].2	Local:1:O. Data[1].1	Local:1:O. Data[1].0
Tag Name	Control_Out B	Control_Out A	—	—	—	Control_fault Reset	—	—
Data	User Out B	User Out A	reserved	reserved	reserved	Fault Reset	Run Rev	Run Fwd

Explicit Messaging with ControlLogix

The ControlLogix platform requires significantly less structure to initiate an explicit message. The explicit message Request and Response is configured within the **MSG** function. The **MSG** function can be found in the Input/Output tab of RSLogix 5000. Notice that in the ControlLogix program example, rung 6 is the only required logic to complete the explicit message request.

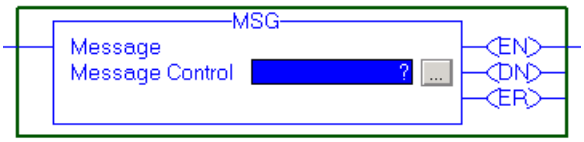

Setting Up the MSG Instruction

A tag name must be given to the MSG function before the rest of the information can be defined. In this example a tag was created with the name ***explicit_mess***. After the instruction has been named, click on the gray box ... to define the rest of the instruction.

The following example shows the exact data format to perform a Get Attribute Single request. This message will specifically access parameter 104, *Average Current*. See Table 7.6 on page 7-4 for additional configurations.

Figure 7.3 Message Configuration

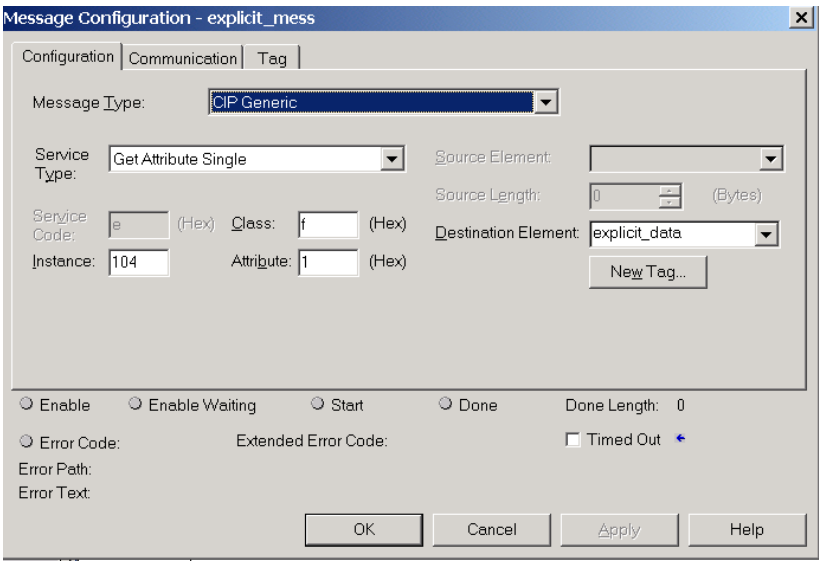

- Message Type
  Select CIP Generic from pull down menu to configure an explicit message.

- Destination Element
  This is the tag name of the location you are going to place the response information. In this example a tag was created with the name explicit_data.

- Service Type
  The pull down menu has several options, however only the Get Attribute Single is used for this example.

  The Class, Instance, and Attribute define the actual information being requested. Additional configurations of these parameters can be found in Appendix B.

- Class
  In this example the value is “F”

- Instance
  In this example the value is “104”

- Attribute
  In this example the value is “1”

  After the above information has been entered, click on the communication tab.

- Path
  The path will define the route the message will take to get to the device it is intended for. In this example the path is Scanner,2,4; where scanner is the name of the 1756-DNB in the rack, 2 represents the DeviceNet port, and 4 represents the physical node address of the ArmorStart.

Figure 7.4 Scanner Path

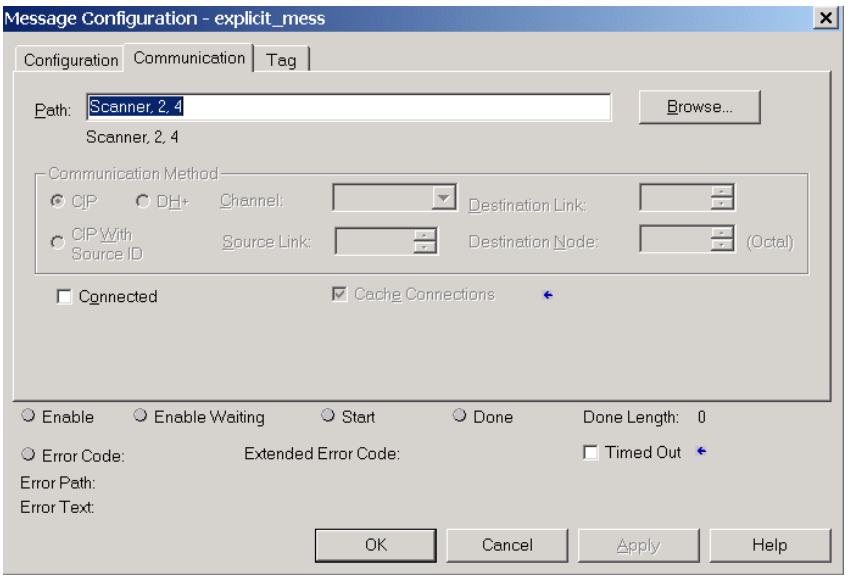

Figure 7.5 ControlLogix Example of Ladder Logic Program

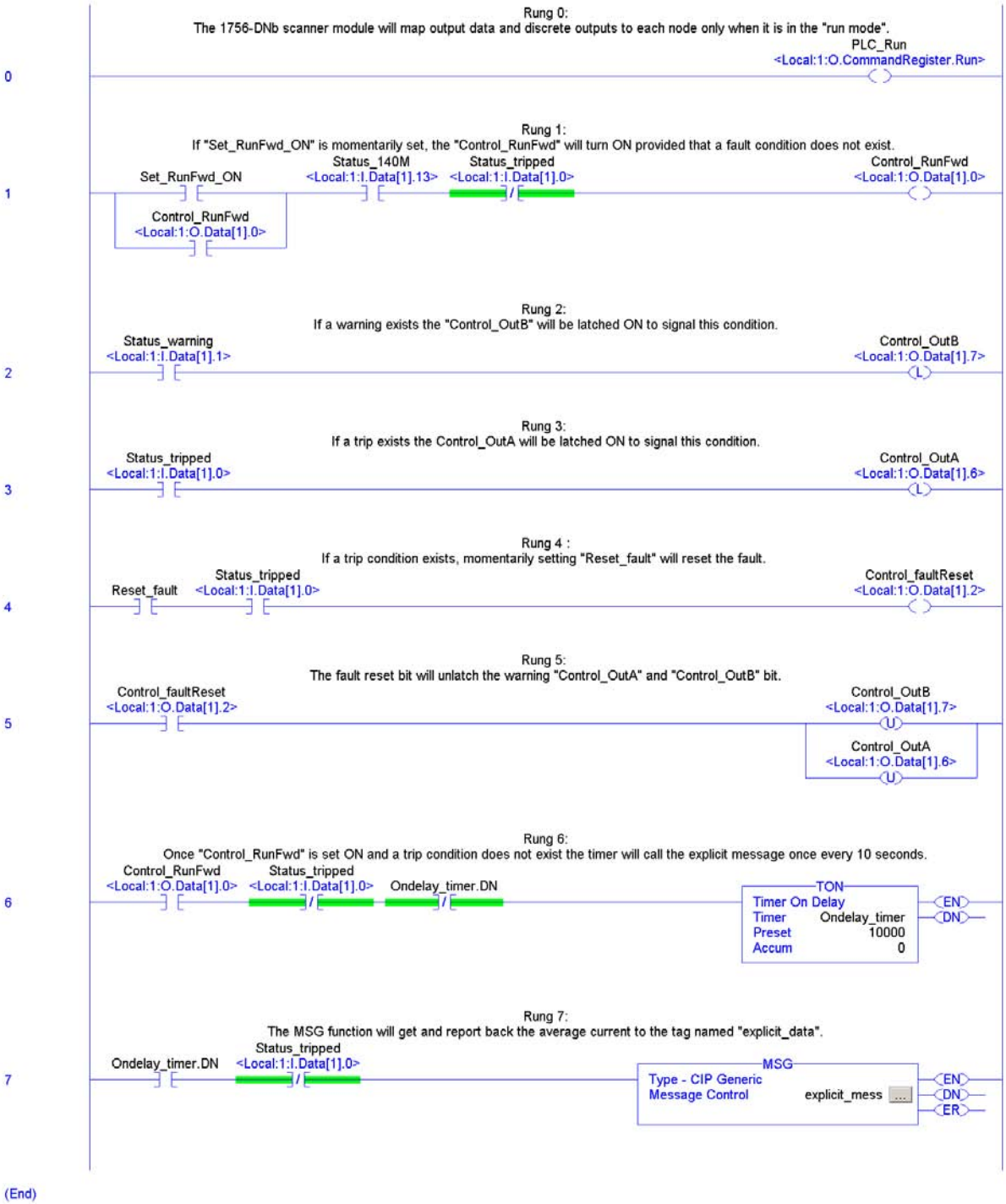

Notes

Using DeviceLogix™

DeviceLogix is a stand-alone Boolean program that resides within the ArmorStart®. The program is embedded in the product software so that there is no additional module required to use this technology; RSNetWorx™ for DeviceNet™ is required to program the device.

In addition to the actual programming, DeviceLogix can be configured to operate under specific situations. It is important to note that the DeviceLogix program will only run if the logic has been enabled. This can be done within the “Logic Editor” of RSNetWorx. The operation configuration is accomplished by setting the “Network Override” and “Communication Override” parameter. The following information describes the varying levels of operation:

- If both overrides are disabled and the logic is enabled, the ONLY time DeviceLogix will run is if there is an active I/O connection with a master, i.e. the master is in Run mode. At all other times DeviceLogix will be running the logic, but will NOT control the state of the outputs.
- If the Network Override is enabled and the logic is enabled then DeviceLogix controls the state of the outputs when the PLC is in Run mode and if a network fault such as Duplicate MAC ID or Module Bus off condition occurs.
- If the Communications Override is enabled and the logic is enabled, the device does not need any I/O connection to run the logic. As long as there is control power and a DeviceNet power source connected to the device, the logic will control the state of the outputs.

DeviceLogix Programming

DeviceLogix has many applications and the implementation is typically only limited to the imagination of the programmer. Keep in mind that the application of DeviceLogix is only designed to handle simple logic routines.

DeviceLogix is programmed using simple Boolean math operators such as AND, OR, NOT, timers, counters, and latches. Decision making is done by combining these Boolean operations with any of the available I/O. The inputs and outputs used to interface with the logic can come from the network or from the device hardware. Hardware I/O is the physical Inputs and Outputs located on the device such as push buttons and pilot lights that are connected to the ArmorStart.

There are many reasons to use the DeviceLogix functionality, but some of the most common are listed below:

- Increased system reliability
- Fast update times (1 - 2 ms possible)
- Improved diagnostics and reduced troubleshooting
- Operation independent of PLC or Network status
- Continue to run process in the event of network interruptions
- Critical operations can be safely shutdown through local logic

DeviceLogix Programming Example

The following example will show how to program a simple logic routine to interface the ArmorStart with a remote hard-wired start-stop station. In this case the I/O is wired as shown in the table.

Table 8.1 Hardware Bit Assignments and Description for the ArmorStart

Input Table		Output Table	
Bit	**Description**	**Bit**	**Description**
Input 0	Start Button	Run Fwd	Contactor Coil
Input 1	Stop Button	N/A	N/A
Input 2	N/A	—	—
Input 3	N/A	—	—

Important: Before programming logic, it is important to decide on the conditions under which the logic will run. As defined earlier, the conditions can be defined by setting parameter 8 (Network Override) and parameter 9 (Comm. Override) to the desired value.

1. While in RSNetWorx for DeviceNet, Double click on the ArmorStart.
2. Click on the "**DeviceLogix**" tab. If you are on-line with a device a dialog box will appear asking you to upload or download. Click on "**Upload**."
3. Click the Start Logic Editor button.
4. If programming off-line continue to step 5, otherwise click on the "**Edit**" button. Click "**Yes**" when asked if you want to Enter Edit Mode. Once in edit mode the entire list of Function Blocks will be displayed in the toolbar.
5. Left Click on the "**RSL**" function block. This is a reset dominate latch.
6. Move the cursor into the grid, and left click to drop the function onto the grid.

7. From the toolbar, Click on the "**Discrete Input**" button and select **Input 0** from the pull-down menu. This is the remote start button based on the example I/O table.

8. Place the input to the left of the RSL function. To drop the input on the page, left click on the desired position.

9. Place the mouse cursor over the tip of Input 0. The tip will turn green. Click on the tip when it turns green.

10. Move the mouse cursor toward the input of the RSL function. A line will follow the cursor. When a connection can be made, the tip of the RSL function will also turn green. Click the on Input and the line will be drawn from Input 0 to the Set Input of the RSL function.

Note: If this was not a valid connection, one of the pin tips would have turned red rather than green. Left double clicking on the unused portion of the grid or pressing the "**Esc**" key at any time will cancel the connection process.

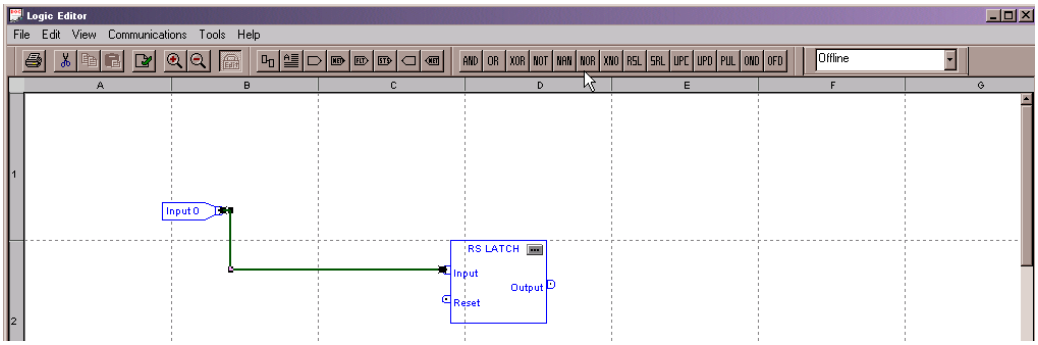

11. From the toolbar, Click on the "**Discrete Input**" button and select **Input 1** from the pull-down menu. This is the remote stop button based on the example I/O table.

12. Place the input to the left of the RSL function.

13. Connect the input to the reset input of the RSL latch.

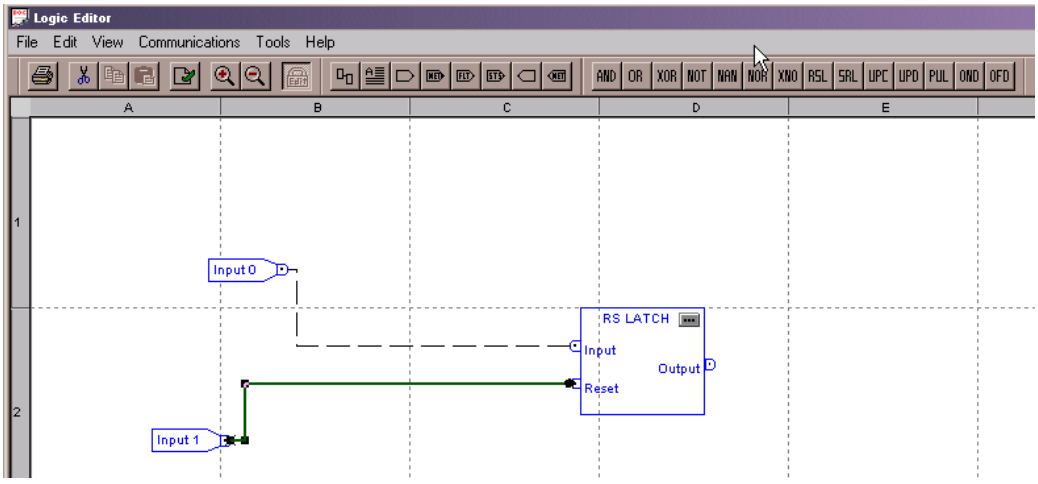

14. From the toolbar, Click on the “**Discrete Output**” button and select “**Run Fwd”** from the pull-down menu. Run Fwd is the relay controlling the coil of the contactor. Click OK.

15. Move the cursor into the grid and place the Output to the right of the RSL function block.

16. Connect the output of the “**RSL**” function block to **Run Fwd.**

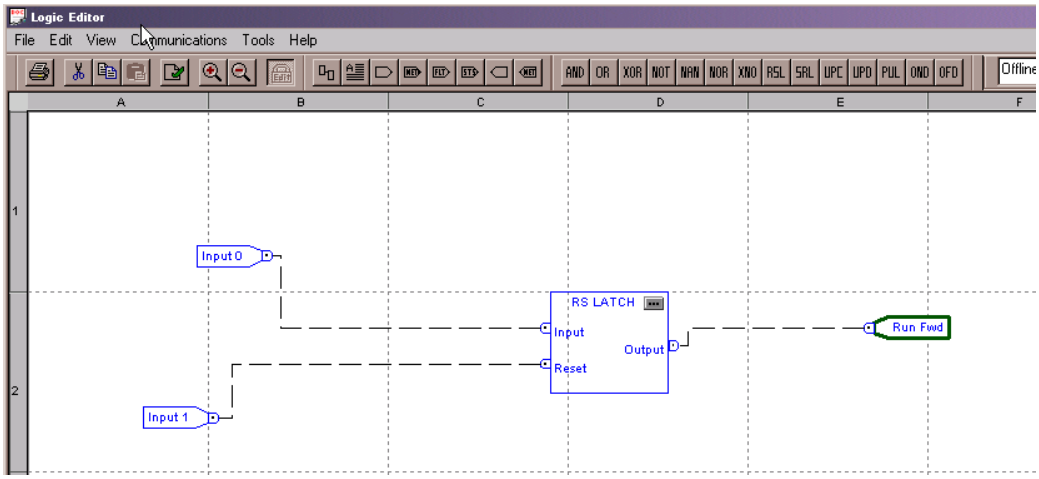

17. Click on the “**Verify**” button located in the toolbar or select “Logic Verify” from the “Tools” pull-down menu.

18. Click on the “**Edit**” button to toggle out of edit mode if online with a device.

19. Go to the pull-down menu in the right corner of the toolbar and select “**Download**”.

20. Note: Ensure that the PLC key switch is in the Program position. If in any other position, the download will not occur and an error will be generated.

21. Press “**OK**” when told the download was successful.

22. Now from the same pull-down menu select “**Logic Enable On**.”

23. The ArmorStart is now programmed and the logic is Active.

ArmorStart® ZIP Configuration

Overview

This chapter describes the steps necessary to configure the Zone Interlocking Parameters (ZIP) to configure peer-to-peer communication between an ArmorStart and another ZIP enabled device such as another ArmorStart or a 1977-ZCIO module. First, an overview of the ZIP parameter set is presented. Then the steps necessary to enable peer-to-peer data production are described. Next, the steps necessary to enable peer-to-peer data consumption are described. Finally, the steps necessary to map the consumed peer-to-peer data to the DeviceLogix™ data table for use in local logic are described.

ZIP Parameter Overview

Each ArmorStart can consume ZIP data from up to 4 other devices. The 4 devices are referred to as “zones” of data and these zones are numbered from 1 to 4. The following parameters are used to configure a device for ZIP peer-to-peer communication:

Param #	Parameter Name	Parameter Description
67	AutoRun ZIP	Enables ZIP data production on power up 0=Disable; 1=Enable
68	Zone ProducedEPR	The Expected Packet Rate in msec. Defines the rate of at which ZIP data is produced. Defaults to 75 msec.
69	Zone ProducedPIT	The Production Inhibit Time in msec. Defines the minimum time between Change of State data production
70	Zone #1 MacId	The node address of the device whose data is to be consumed for zone 1
71	Zone #2 MacId	The node address of the device whose data is to be consumed for zone 2
72	Zone #3 MacId	The node address of the device whose data is to be consumed for zone 3
73	Zone #4 MacId	The node address of the device whose data is to be consumed for zone 4
74	Zone #1 Health	Read Only consumed connection status for zone 1 0=Healthy; 1=Not Healthy
75	Zone #2 Health	Read Only consumed connection status for zone 2 0=Healthy; 1=Not Healthy
76	Zone #3 Health	Read Only consumed connection status for zone 3 0=Healthy; 1=Not Healthy
77	Zone #4 Health	Read Only consumed connection status for zone 4 0=Healthy; 1=Not Healthy
78	Zone #1 Mask	Bit enumerated consumed data mask for zone 1. Each bit represents a byte in consumed data up to 8 bytes in length. If a mask bit is set, the corresponding consumed data byte is placed in the DeviceLogix data table
79	Zone #2 Mask	Bit enumerated consumed data mask for zone 2. Each bit represents a byte in consumed data up to 8 bytes in length. If a mask bit is set, the corresponding consumed data byte is placed in the DeviceLogix data table
80	Zone #3 Mask	Bit enumerated consumed data mask for zone 3. Each bit represents a byte in consumed data up to 8 bytes in length. If a mask bit is set, the corresponding consumed data byte is placed in the DeviceLogix data table
81	Zone #4 Mask	Bit enumerated consumed data mask for zone 4. Each bit represents a byte in consumed data up to 8 bytes in length. If a mask bit is set, the corresponding consumed data byte is placed in the DeviceLogix data table
82	Zone #1 Offset	The byte offset into the ZIP data portion of the DeviceLogix data table to place the chosen consumed data bytes for zone 1.
83	Zone #2 Offset	The byte offset into the ZIP data portion of the DeviceLogix data table to place the chosen consumed data bytes for zone 2.
84	Zone #3 Offset	The byte offset into the ZIP data portion of the DeviceLogix data table to place the chosen consumed data bytes for zone 3.
85	Zone #4 Offset	The byte offset into the ZIP data portion of the DeviceLogix data table to place the chosen consumed data bytes for zone 4.
86	Zone #1 EPR	The Expected Packet Rate in msec. for the zone 1 consuming connection. If consumed data is not received in 4 times this value, the zone connection will time out and “Zone #1 Health” will report 1 = Not Healthy.
87	Zone #2 EPR	The Expected Packet Rate in msec. for the zone 2 consuming connection. If consumed data is not received in 4 times this value, the zone connection will time out and “Zone #2 Health” will report 1 = Not Healthy
88	Zone #3 EPR	The Expected Packet Rate in msec. for the zone 3 consuming connection. If consumed data is not received in 4 times this value, the zone connection will time out and “Zone #3 Health” will report 1 = Not Healthy
89	Zone #4 EPR	The Expected Packet Rate in msec. for the zone 4 consuming connection. If consumed data is not received in 4 times this value, the zone connection will time out and “Zone #4 Health” will report 1 = Not Healthy
90	Zone #1 Control	Zone 1 Control Word. Default Bit 1 set, all other bits clear. Bit0=Security Enable 1=Enable data security Bit1=COS Cnxn 1=Consume DNet Group 2 COS messages Bit2=Poll Cnxn 1=Consume DNet Group 2 Poll Response msgs. Bit3=Strobe Cnxn 1=Consume DNet Group 2 Strobe Response msgs. Bit4=Multicast Poll 1=Consume Multicast Poll Response messages.
91	Zone #2 Control	Zone 2 Control Word. Default Bit 1 set, all other bits clear. Bit0=Security Enable 1=Enable data security Bit1=COS Cnxn 1=Consume DNet Group 2 COS messages Bit2=Poll Cnxn 1=Consume DNet Group 2 Poll Response msgs. Bit3=Strobe Cnxn 1=Consume DNet Group 2 Strobe Response msgs. Bit4=Multicast Poll 1=Consume Multicast Poll Response messages.
92	Zone #3 Control	Zone 3 Control Word. Default Bit 1 set, all other bits clear. Bit0=Security Enable 1=Enable data security Bit1=COS Cnxn 1=Consume DNet Group 2 COS messages Bit2=Poll Cnxn 1=Consume DNet Group 2 Poll Response msgs. Bit3=Strobe Cnxn 1=Consume DNet Group 2 Strobe Response msgs. Bit4=Multicast Poll 1=Consume Multicast Poll Response messages.
93	Zone #4 Control	Zone 4 Control Word. Default Bit 1 set, all other bits clear. Bit0=Security Enable 1=Enable data security Bit1=COS Cnxn 1=Consume DNet Group 2 COS messages Bit2=Poll Cnxn 1=Consume DNet Group 2 Poll Response msgs. Bit3=Strobe Cnxn 1=Consume DNet Group 2 Strobe Response msgs. Bit4=Multicast Poll 1=Consume Multicast Poll Response messages.
94	Zone #1 Key	When the “Security Enable” bit for zone 1 is enabled, this value must match the value of the Device Value Key parameter in the device whose data is being consumed for zone 1.
95	Zone #2 Key	When the “Security Enable” bit for zone 1 is enabled, this value must match the value of the Device Value Key parameter in the device whose data is being consumed for zone 2.
96	Zone #3 Key	When the “Security Enable” bit for zone 1 is enabled, this value must match the value of the Device Value Key parameter in the device whose data is being consumed for zone 3.
97	Zone #4 Key	When the “Security Enable” bit for zone 1 is enabled, this value must match the value of the Device Value Key parameter in the device whose data is being consumed for zone 4.
98	Device Value Key	This value is produced in the last 2 bytes of data when one of the ZIP assemblies is chosen for data production.
99	Zone Ctrl Enable	Global enable for ZIP peer-to-peer messaging. This parameter must be disabled before any changes to the ZIP configuration for the device can be made. 0=Disable; 1=Enable

Data Production

In a typical ZIP system, each device on the network automatically produces IO data using “Change of State” (COS) triggering. The automatic production of this COS data by an ArmorStart is enabled by setting Parameter 67 (AutoRun ZIP) to a value of 1 = Enable. Then COS data will be produced automatically when the global ZIP enable parameter (Zone Ctrl Enable, Parameter 99) is set to the value of 1 = Enable. Data production will take place at a rate specified by Parameter 68 (Zone ProducedEPR). The minimum period between Change of State productions is determined by the value of Parameter 69 (Zone ProducedPIT)

Data Consumption

In the ArmorStart data from up to 4 other devices can be consumed for use in the local logic. The 4 devices whose data is to be consumed are logically referred to by zone number, i.e. zones 1 – 4. To configure an ArmorStart to consume data from another node on the network, the node address or “MacId” is placed in the proper “Zone MacId” parameter (parameters 70-73). For example to configure an ArmorStart to consume data for zone 1 from node number 11 on the network, the value 11 is placed in Parameter 70 (Zone #1 MacId).

Not all zones need to be configured to consume data. If the user wishes to turn off data consumption for a zone, the value 64 is placed in the Zone MacId parameter for that zone.

The ArmorStart monitors the frequency at which all consumed data is received in order to determine the health of each zone’s data connection. The Zone EPR parameters (parameters 86-89) define the “Expected Packet Rate” for each of the 4 zone connections.

If no consumed data for a zone is received in 4 times the EPR, then the zone connection times out, and the value of the corresponding “Zone Health” parameter (parameters 74-77) is set to the value 1 = Not Healthy. The “Zone Health” status of each zone is also available for use in DeviceLogix programs.

Mapping Consumed Data to the DeviceLogix Data Table.

Consumed data for the 4 zones is placed in an 8 byte section of the DeviceLogix Data Table. Individual bits in this section of the DeviceLogix Data Table can be used in DeviceLogix programs. The table below shows the organization of the 8 bytes of the data table

Byte #	Bit Number and Name							
0	ZIP 7	ZIP 6	ZIP 5	ZIP 4	ZIP 3	ZIP 2	ZIP 1	ZIP 0
1	ZIP 15	ZIP 14	ZIP 13	ZIP 12	ZIP 11	ZIP 10	ZIP 9	ZIP 8
2	ZIP 23	ZIP 22	ZIP 21	ZIP20	ZIP 19	ZIP 18	ZIP 17	ZIP 16
3	ZIP 31	ZIP 30	ZIP 29	ZIP 28	ZIP 27	ZIP 26	ZIP 25	ZIP 24
4	ZIP 39	ZIP 38	ZIP 37	ZIP 36	ZIP 35	ZIP 34	ZIP 33	ZIP 32
5	ZIP 47	ZIP 46	ZIP 45	ZIP 44	ZIP 43	ZIP 42	ZIP 41	ZIP 40
6	ZIP 55	ZIP 54	ZIP 53	ZIP 52	ZIP 51	ZIP 50	ZIP 49	ZIP 48
7	ZIP 63	ZIP 62	ZIP 61	ZIP 60	ZIP 59	ZIP 58	ZIP 57	ZIP 56

The “Zone Mask” parameters (parameters 78-81) select individual bytes within a consumed message for placement in the DeviceLogix Data Table. Each single bit in the mask represents a corresponding byte in the consumed message packet. For example, consider an ArmorStart that has zone 1 configured to consume data from another ArmorStart that is producing data of the following format:

Instance 163 Standard Produced Starter with Network Outputs and ZIP CCV								
Byte	**Bit 7**	**Bit 6**	**Bit 5**	**Bit 4**	**Bit 3**	**Bit 2**	**Bit 1**	**Bit 0**
1				Ready	Running Rev	Running Fwd	Warning	Tripped
2			140M On	HOA	User In 4	User In 3	User In 2	User In 1
3	Net Out 8	Net Out 7	Net Out 6	Net Out 5	Net Out 4	Net Out 3	Net Out 2	Net Out 1
4		Net Out 15	Net Out 14	Net Out 13	Net Out 12	Net Out 11	Net Out 10	Net Out 9
5	Device Value Key (low)							
6	Device Value Key (high)							

The user can choose to place only bytes 1 and 2 of the above consumed data in the DeviceLogix Data Table by selecting a Zone Mask value of 00000011 binary as shown in the following RSNetWorx for DeviceNet screen:

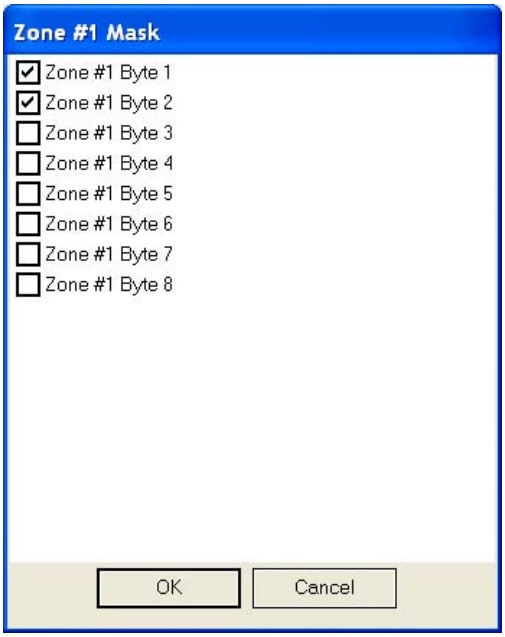

The “Zone Offset” parameters (parameters 82-85) determine where in the DeviceLogix Data Table to place the consumed data bytes chosen for mapping. The “Zone Offset” value corresponds to a byte in the DeviceLogix Data Table where the data should be placed. Continuing our example from above, a value of 2 in the “Zone #1 Offset” parameter would result in the masked consumed data bytes being placed starting at byte 2 in the data table. This would result in the following ZIP bit assignments:

ZIP 16 = Zone 1: Tripped
ZIP 17 = Zone 1: Warning

ZIP 18 = Zone 1: Running Fwd
ZIP 19 = Zone 1: Running Rev
ZIP 20 = Zone 1: Ready
ZIP 21 = Zone 1: reserved
ZIP 22 = Zone 1: reserved
ZIP 23 = Zone 1: reserved
ZIP 24 = Zone 1: User In 1
ZIP 25 = Zone 1: User In 2
ZIP 26 = Zone 1: User In 3
ZIP 27 = Zone 1: User In 4
ZIP 28 = Zone 1: HOA
ZIP 29 = Zone 1: 140M Stat
ZIP 30 = Zone 1: reserved
ZIP 31 = Zone 1: reserved

ZIP bits appear in the list of Network Input Points that are available for use in the DeviceLogix Editor in RSNetWorx for DeviceNet as shown below:

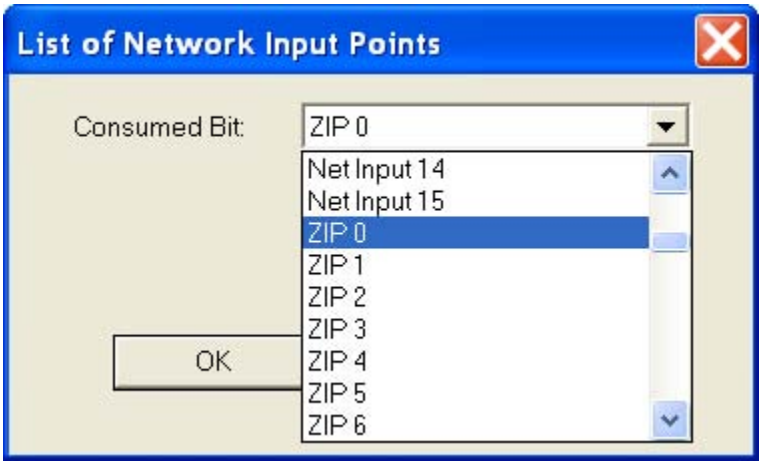

ZIP Example

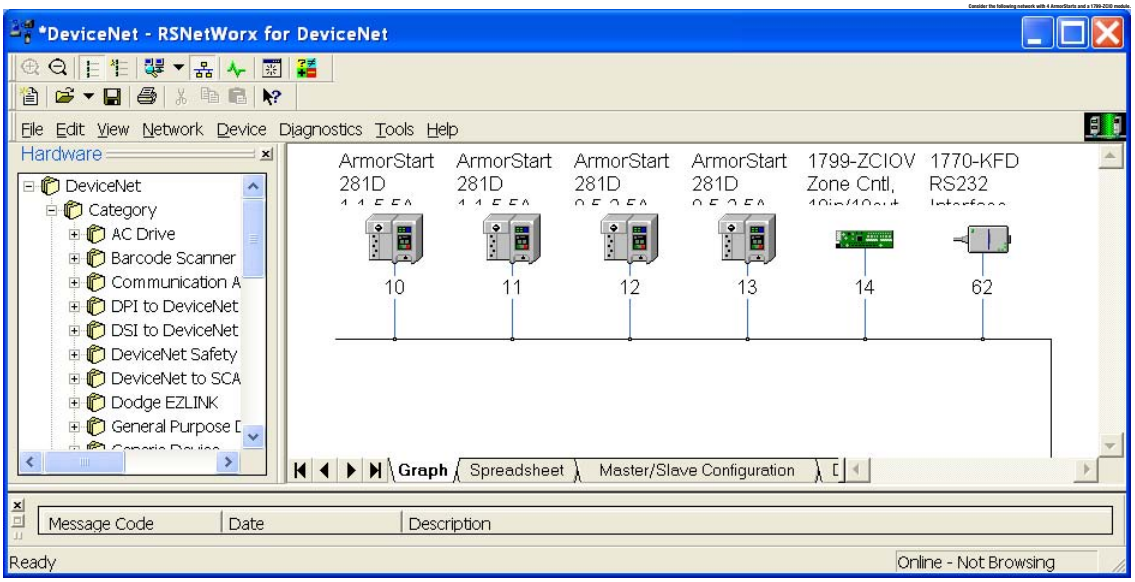

We will configure node 10 to consume data as follows:

Zone 1 data will come from node 11
Zone 2 data will come from node 12
Zone 3 data will come from node 13
Zone 4 data will come from node 14.

First we must set up nodes 11-14 to “Auto Produce” data when ZIP is enabled.

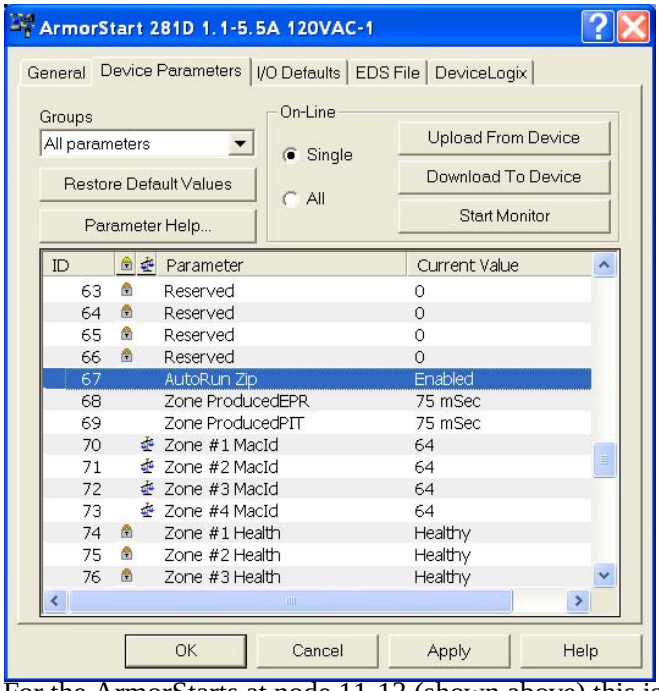

For the ArmorStarts at node 11-13 (shown above) this is done by setting parameter 67 “AutoRun Zip” to “Enabled”. Note that we will leave parameters 68 and 69 at their default values so that data will be produced every 75 msec.

For the 1799-ZCIOV module (shown below) this is done by setting parameter 13 "AutoRun Zip" to "Enabled".

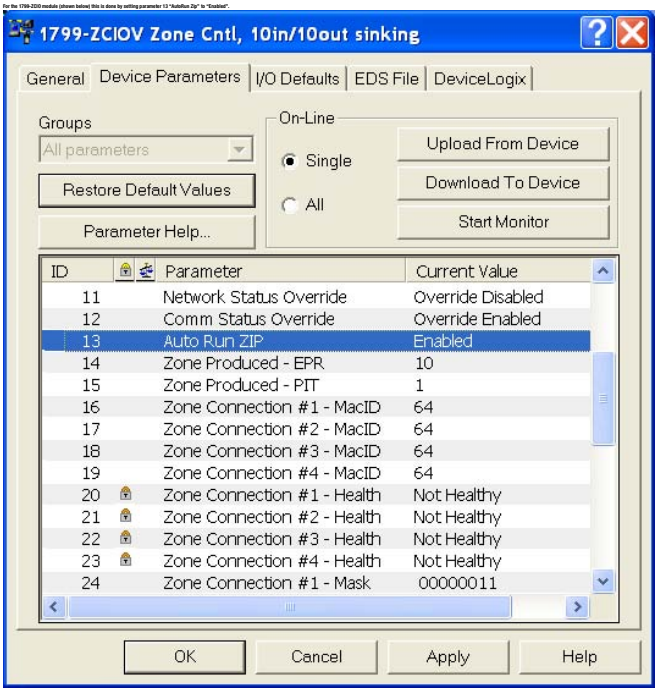

Next we must configure data consumption for the 4 zones in the ArmorStart at node 10.

First set the “Zone MacId” parameters as shown below:

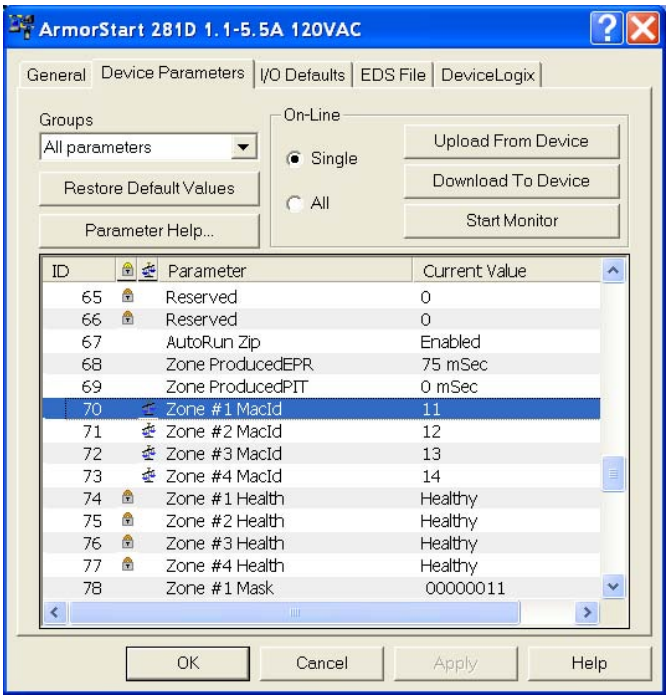

We will leave the “Zone EPR” parameters at their default value of 75 msec. This tells our ArmorStart that if no data for a zone is consumed for a period of 300 msec (4 times the EPR), the zone connection should time out and the health status should be set to “Not Healthy”. We will also leave the “Zone Control” parameters at their default telling the ArmorStart to consume Change of State Data for each zone, and to disable data security checking. Since data security checking is disabled, we can also leave parameters 94-98 at their default values of 0.

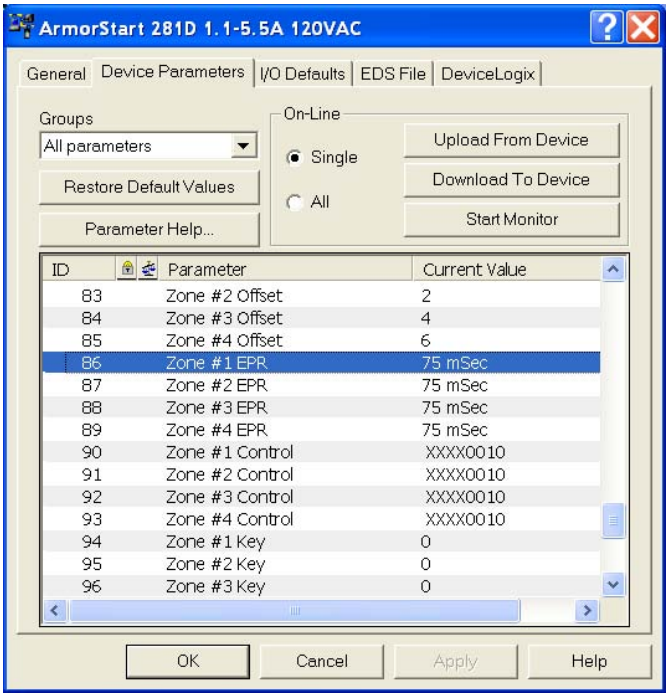

We will set the “Zone Masks” to the value of 00000011 binary. This tells each zone to map bytes 1 and 2 to the DeviceLogix Data Table.

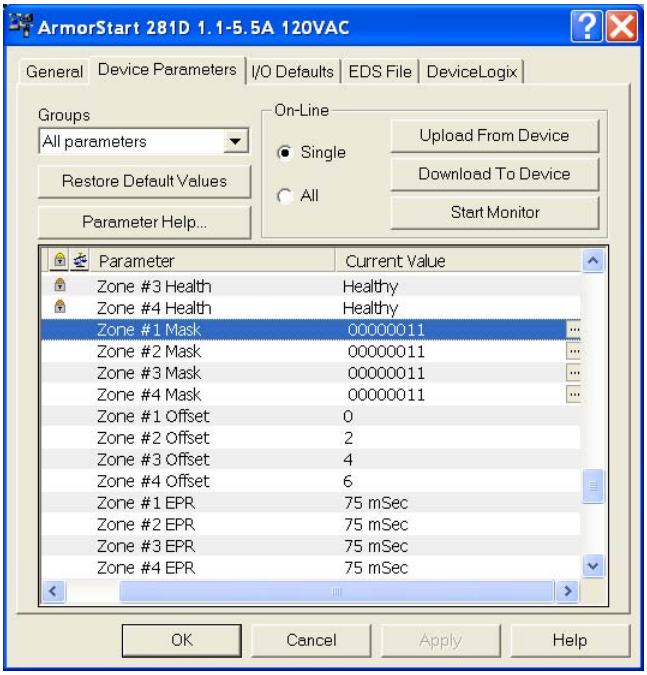

We will set the “Zone Offsets as shown below. This maps zone 1 data to byte 0 of the DeviceLogix Data Table, zone 2 data to byte 2 of the DeviceLogix Data Table, zone 3 data to byte 4 of the DeviceLogix Data Table and zone 4 data to byte 6 of the DeviceLogix Data Table.

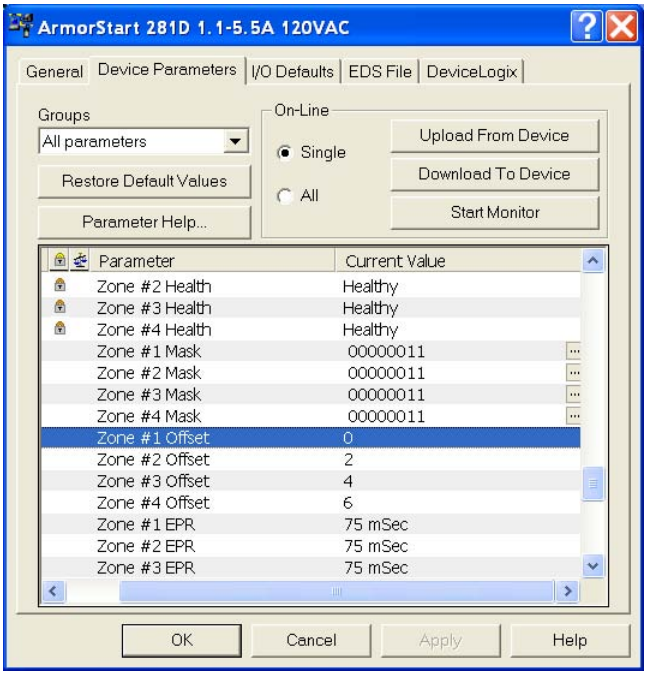

Assuming the ArmorStarts mapped to zones 1 to 3 are producing the following data:

Instance 163 Standard Produced Starter with Network Outputs and ZIP CCV								
Byte	**Bit 7**	**Bit 6**	**Bit 5**	**Bit 4**	**Bit 3**	**Bit 2**	**Bit 1**	**Bit 0**
1				Ready	Running Rev	Running Fwd	Warning	Tripped
2			140M On	HOA	User In 4	User In 3	User In 2	User In 1
3	Net Out 8	Net Out 7	Net Out 6	Net Out 5	Net Out 4	Net Out 3	Net Out 2	Net Out 1
4		Net Out 15	Net Out 14	Net Out 13	Net Out 12	Net Out 11	Net Out 10	Net Out 9
5	Device Value Key (low)							
6	Device Value Key (high)							

And assuming that the 1799-ZCIO module is producing the following data:

1799-ZCIO Produced Assembly								
Byte	**Bit 7**	**Bit 6**	**Bit 5**	**Bit 4**	**Bit 3**	**Bit 2**	**Bit 1**	**Bit 0**
1	Input 7	Input 6	Input 5	Input 4	Input 3	Input 2	Input 1	Input 0
2		Logic Ena					Input 9	Input 8
3	Output 7	Output 6	Output 5	Output 4	Output 3	Output 2	Output 1	Output 0
4							Output 9	Output 8
5	Net Out 7	Net Out 6	Net Out 5	Net Out 4	Net Out 3	Net Out 2	Net Out 1	Net Out 0
6	ZIP CCV (Low)							
7	ZIP CCV (High)							

The above configuration results in the following DeviceLogix ZIP Data Table mapping

ZIP 0 = Zone 1: Tripped
ZIP 1 = Zone 1: Warning
ZIP 2 = Zone 1: Running Fwd
ZIP 3 = Zone 1: Running Rev
ZIP 4 = Zone 1: Ready
ZIP 5 = Zone 1: reserved
ZIP 6 = Zone 1: reserved
ZIP 7 = Zone 1: reserved
ZIP 8 = Zone 1: User In 1
ZIP 9 = Zone 1: User In 2
ZIP 10 = Zone 1: User In 3
ZIP 11 = Zone 1: User In 4
ZIP 12 = Zone 1: HOA
ZIP 13 = Zone 1: 140M Stat
ZIP 14 = Zone 1: reserved
ZIP 15 = Zone 1: reserved

ZIP 16 = Zone 2: Tripped
ZIP 17 = Zone 2: Warning
ZIP 18 = Zone 2: Running Fwd
ZIP 19 = Zone 2: Running Rev
ZIP 20 = Zone 2: Ready
ZIP 21 = Zone 2: reserved
ZIP 22 = Zone 2: reserved
ZIP 23 = Zone 2: reserved
ZIP 24 = Zone 2: User In 1
ZIP 25 = Zone 2: User In 2
ZIP 26 = Zone 2: User In 3
ZIP 27 = Zone 2: User In 4
ZIP 28 = Zone 2: HOA
ZIP 29 = Zone 2: 140M Stat
ZIP 30 = Zone 2: reserved
ZIP 31 = Zone 2: reserved

ZIP 32 = Zone 3: Tripped
ZIP 33 = Zone 3: Warning
ZIP 34 = Zone 3: Running Fwd
ZIP 35 = Zone 3: Running Rev
ZIP 36 = Zone 3: Ready
ZIP 37 = Zone 3: reserved
ZIP 38 = Zone 3: reserved
ZIP 39 = Zone 3: reserved
ZIP 40 = Zone 3: User In 1
ZIP 41 = Zone 3: User In 2
ZIP 42 = Zone 3: User In 3
ZIP 43 = Zone 3: User In 4
ZIP 44 = Zone 3: HOA
ZIP 45 = Zone 3: 140M Stat
ZIP 46 = Zone 3: reserved
ZIP 47 = Zone 3: reserved

ZIP 48 = Zone 4: Input 0
ZIP 49 = Zone 4: Input 1
ZIP 50 = Zone 4: Input 2
ZIP 51 = Zone 4: Input 3
ZIP 52 = Zone 4: Input 4
ZIP 53 = Zone 4: Input 5
ZIP 54 = Zone 4: Input 6
ZIP 55 = Zone 4: Input 7
ZIP 56 = Zone 4: Input 8
ZIP 57 = Zone 4: Input 9
ZIP 58 = Zone 4: reserved
ZIP 59 = Zone 4: reserved
ZIP 60 = Zone 4: reserved
ZIP 61 = Zone 4: reserved
ZIP 62 = Zone 4: Logic Ena
ZIP 63 = Zone 4: reserved

Finding ZIP bits in the DeviceLogix Editor

The 64 ZIP bits are available for use in DeviceLogix programs in the list of “Network Input Points”.

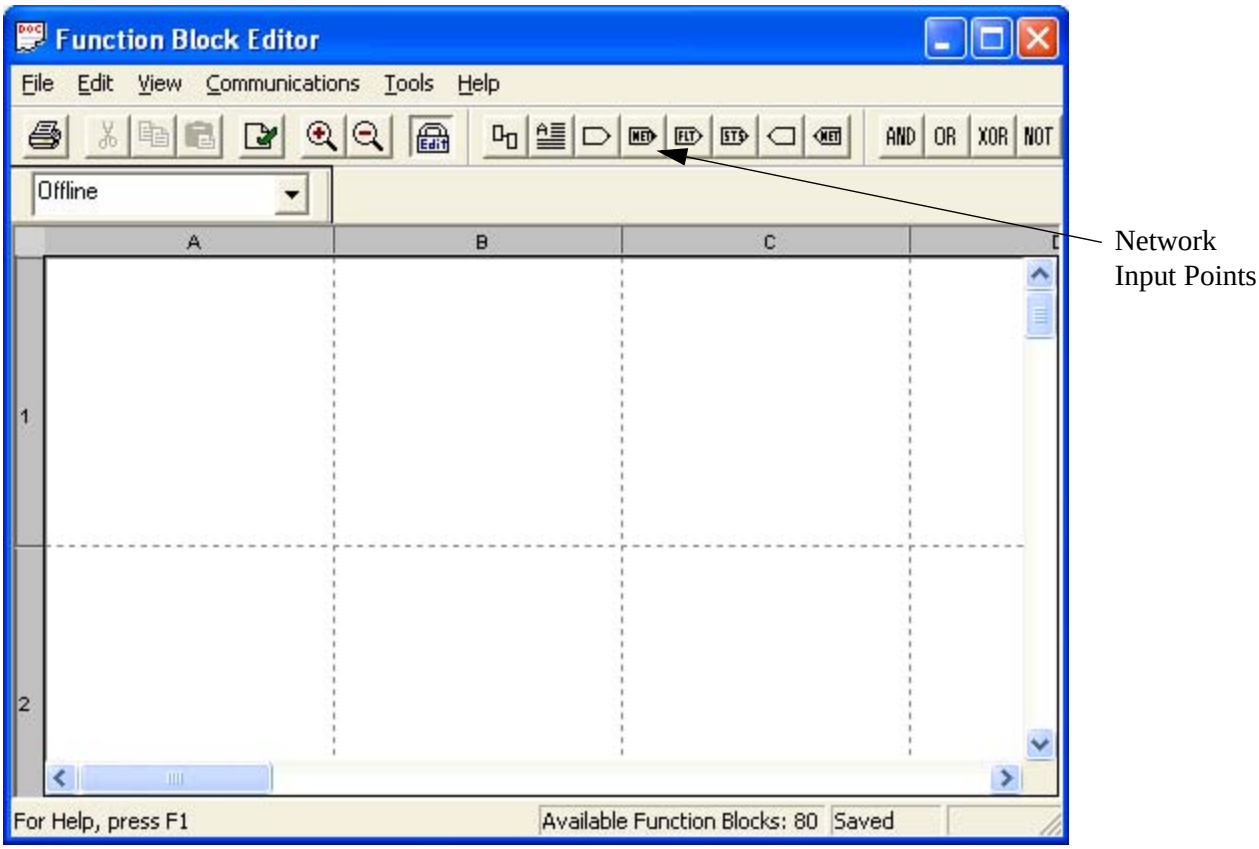

Select “Network Input Points” in the DeviceLogix editor toolbar, and scroll down past the first 16 Network Inputs. The 64 ZIP bits are available for use in the list as shown below:

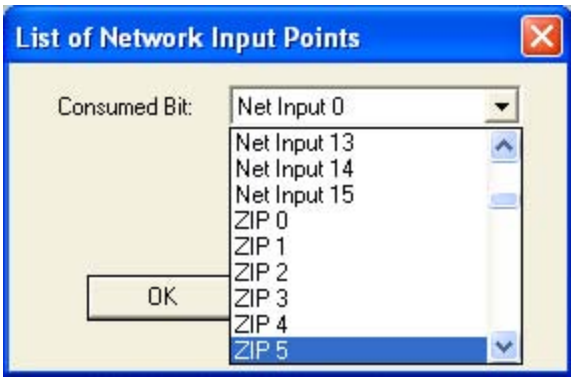

Diagnostics

Overview

This chapter describes the fault diagnostics of the ArmorStart® Distributed Motor Controller and the conditions that cause various faults to occur.

Protection Programming

Many of the protective features available with the ArmorStart Distributed Motor Controller can be enabled and adjusted through the programming parameters provided. For further details on programming, refer to Chapter 3, 4, 5, or 6, Program and Status Parameters.

Fault Display

The ArmorStart Distributed Motor Controller comes equipped with a built-in LED status indication which provides four status LEDs and a Reset button. The LEDs provide status indication for the following:

- Power LED
  The LED is illuminated solid green when control power is present and with the proper polarity
- RUN LED
  This LED is illuminated solid green when a start command and control power are present
- Network LED
  This bi-color (red/green) LED indicates the status of the communication link
- FAULT LED
  Indicates Controller Fault (Trip) condition

The Reset Button provides local fault trip reset.

Figure 10.1 LED Status Indication and Reset

Important: Resetting the fault will not correct the cause of the fault condition. Corrective action must be taken before resetting the fault.

Clear Fault

You may clear a fault using the following methods:

- Remotely via network communications
- A remote reset will be attempted upon detection of a rising edge (0 to 1 transition) of the “Fault Reset” bit in the various I/O assemblies. A remote reset will also be attempted upon detection of the rising edge of the “Fault Reset” parameter.
- Locally via the “Reset” button on the LED Status indication keypad.

Fault Codes

Table 10.1 provides a complete reference of the Fault LED indications for Bulletin 280 and 281 ArmorStart Distributed Motor Controllers.

Table 10.1 Fault Indication

Blink Pattern	Fault Types	
	Bulletin 280/281	Bulletin 284
1	Short Circuit	Short Circuit
2	Overload Trip	Overload Trip
3	Phase Loss	Phase Short
4	Reserved	Ground Fault
5	Reserved	Stall
6	Control Power	Control Power
7	I/O Fault	I/O Fault
8	Over Temperature	Over Temperature
9	Phase Imbalance	Over Current
10	DeviceNet™ Power Loss	DeviceNet™ Power Loss
11	Reserved	Internal Communications
12	Reserved	DC Bus Fault
13	EEPROM Fault	EEPROM Fault
14	Hardware Fault	Hardware Fault
15	Reserved	Restart Retries
16	Reserved	Misc. Fault

Fault Definitions

Short Circuit

Short Circuit indicates that the Bulletin 140M motor protector has tripped, or that the internal wiring protection algorithm has detected an unsafe current surge. This fault cannot be disabled. The Fault LED will flash a 1-blink pattern.

Overload Trip

The load has drawn excessive current and based on the overload trip class selected, the device has tripped. This fault cannot be disabled. The Fault LED will flash a 2-blink pattern.

Phase Loss

Indicates a missing supply phase. This fault can be disabled and *is* disabled by default. The Fault LED will flash a 3-blink pattern.

Phase Short

Indicates the drive has detected a phase short. This fault cannot be disabled. The Fault LED will flash a 3-blink pattern.

Ground Fault

Indicates the drive has detected a ground fault. This fault cannot be disabled. The Fault LED will flash a 4-blink pattern.

Stall

Indicates the drive has detected a stall condition, indicating the motor has not reached full speed. This fault cannot be disabled. The Fault LED will flash a 5-blink pattern.

Control Power

Indicates a loss of control power voltage or a blown control power fuse. This fault can be disabled and *is* disabled by default. The Fault LED will flash a 6-blink pattern.

I/O Fault

This error can indicate a shorted sensor, shorted input device, or input wiring mistakes. It can also indicate a blown output fuse. This fault can be disabled and *is* disabled by default. The Fault LED will flash a 7-blink pattern.

Over Temperature

Indicates that the operating temperature has been exceeded. This fault cannot be disabled. The Fault LED will flash a 8-blink pattern.

Phase Imbalance

Indicates an imbalance supply voltage. This fault can be disabled and *is* disabled by default. The Fault LED will flash a 9-blink pattern.

Over Current

Indicates the drive has detected an over current fault. This fault cannot be disabled. The Fault LED will flash a 9-blink pattern.

DeviceNet™ Power Loss

DeviceNet power has been lost or has dropped below the 12V threshold. This fault can be disabled and *is* disabled by default. The Fault LED will flash a 10-blink pattern.

Internal Communication Fault

Indicates an internal communication fault has been detected. This fault cannot be disabled. The Fault LED will flash 11-blink pattern.

DC Bus Fault

Indicates the drive has detected a DC Bus Fault. This fault cannot be disabled. The Fault LED will flash a 12-blink pattern.

EEPROM Fault

This is a major fault, which renders the ArmorStart inoperable. This fault cannot be disabled. The Fault LED will flash a 13-blink pattern.

Hardware Fault

Indicates incorrect base/starter assembly. This fault cannot be disabled. The Fault LED will flash a 14-blink pattern.

Restart Retries

This fault is generated when the drive detects that the auto retries count has been exceeded. This fault cannot be disabled. The Fault LED will flash a 15-blink pattern.

Miscellaneous Faults

For Bulletin 284 units, this fault is actually the logical OR of the drive's Auxiliary Input fault (fault code F2), Heatsink Over Temperature (fault code F8), Params Defaulted fault (fault code F48) and SVC Autotune fault (fault code F80).
This fault cannot be disabled. The Fault LED will flash a 16-blink pattern.

Troubleshooting

Introduction

The purpose of this chapter is to assist in troubleshooting the ArmorStart® Distributed Motor Controller using the LED Status Display and diagnostic parameters.

ATTENTION

Servicing energized industrial control equipment can be hazardous. Electrical shock, burns or unintentional actuation of controlled industrial equipment may cause death or serious injury. For safety of maintenance personnel as well as others who might be exposed to electrical hazards associated with maintenance activities, follow the local safety related work practices (for example, the NFPA70E, Part II in the United States). Maintenance personnel must be trained in the safety practices, procedures, and requirements that pertain to their respective job assignments.

ATTENTION

Do not attempt to defeat or override fault circuits. The cause of the fault indication must be determined and corrected before attempting operation. Failure to correct a control system of mechanical malfunction may result in personal injury and /or equipment damage due to uncontrolled machine system operation.

ATTENTION

The drive contains high voltage capacitors that take time to discharge after removal of mains supply. Before working on drive, ensure isolation of mains supply from line inputs (R, S, T, [L1, L2, L3]). Wait three minutes for capacitors to discharge to safe voltage levels. Failure to do so may result in personal injury or death.
Darkened display LEDs is not an indication that capacitors have discharged to safe voltage levels.

ATTENTION

Only qualified personnel familiar with adjustable frequency AC drives and associated machinery should plan or implement the installation, startup, and subsequent maintenance of the system. Failure to comply may result in personal injury and/or equipment damage.

ATTENTION

This drive contains electrostatic discharge- (ESD) sensitive parts and assemblies. Static control precautions are required when installing, testing, servicing, or repairing this assembly. Component damage may result if ESD control procedures are not followed. If you are not familiar with static control procedures, refer to Allen-Bradley Publication 8000-4.5.2, *Guarding against Electrostatic Damage*, or any other applicable ESD protection handbook.

ATTENTION

An incorrectly applied or installed drive can result in component damage or a reduction in product life. Wiring or application errors, such as undersizing the motor, incorrect or inadequate AC supply, or excessive ambient temperatures may result in malfunction of the system.

Bulletin 280/281 Troubleshooting

The following flowchart for Bulletin 280/281 units, is provided to aid in quick troubleshooting.

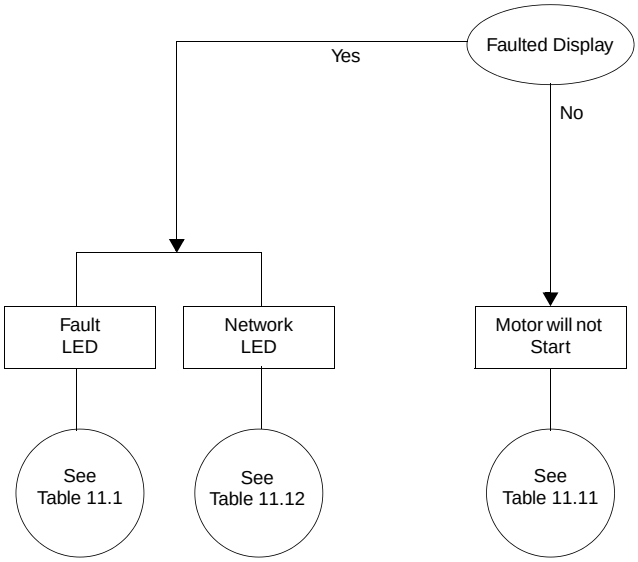

Table 11.1 Fault LED Indications for Bulletin 280 and 281 ArmorStart Distributed Motor Controllers

Blink Pattern	Definitions	Possible Causes or Remedies
1	Short Circuit	The motor circuit protector has tripped, or the internal wiring protection algorithm has detected an unsafe current range. Try to reset the protector if tripped. If the condition continues, check the power wiring. This fault cannot be disabled.
2	Overload Trip	The load has drawn excessive current and based on the trip class selected, the device has tripped. Verify that the load is operating correctly and the ArmorStart is properly set-up. This fault cannot be disabled.
3	Phase Loss	The ArmorStart has detected a missing phase. Verify that three-phase voltage is present at the line side connections. This fault can be disabled and is disabled by default.
4	Reserved	Not Used
5	Reserved	Not Used
6	Control Power	The ArmorStart has detected a loss of the control power voltage or blown control power fuse. Check control voltage, wiring, and proper polarity. Replace control voltage fuse if necessary. This fault can be disabled and is disabled by default.
7	I/O Fault	This error indicates a shorted sensor, shorted input device, or input wiring mistakes or a blown output fuse. If this fault occurs, the offending problem should be isolated or removed prior to restarting the system. This fault can be disabled and is disabled by default.
8	Over Temperature	Indicates that the operating temperature has been exceeded. This fault cannot be disabled.
9	Phase Imbalance	The ArmorStart has detected a voltage imbalance. Check the power system and correct if necessary. This fault can be disabled and is disabled by default.
10	DNet Power Loss	DeviceNet™ power has been lost or has dropped below the 12 volt threshold. Check the state of the network power supply and look for DeviceNet media problems. This fault can be disabled and is disabled by default.
11	Reserved	Not Used
12	Reserved	Not Used
13	EEPROM Fault	This is a major fault, which renders the ArmorStart inoperable. Possible causes of this fault are transients induced during EEprom storage routines. If the fault was initiated by a transient, power cycling should clear the problem; otherwise, replacement of the ArmorStart may be required. This fault cannot be disabled.
14	Hardware Fault	This fault indicates that a serious hardware problem exists. Check for a base/starter module mismatch. If no mismatch exists, the ArmorStart may need to be replaced. (Hdw Flt is the factory-enabled default setting.) This fault cannot be disabled.

Table 11.2 Motor Will Not Start – No Output Voltage to the Motor

LED Status Indication	Possible Cause	Possible Solutions
Fault or Network Status Led indicates a fault condition	See Fault Description	See Table 11.1 and/or Table 11.16 addressing fault conditions
No Fault condition indicated	Three Phase is absent	Check power system. Check three-phase power wiring and correct if necessary
Display is blank	Control voltage is absent	Check control wiring and polarity. Correct if necessary.

Table 11.3 Motor Will Not Start – No Output Voltage to the Motor

Display	Possible Cause	Possible Solutions
Fault displayed	See fault description	See Table 11.12 addressing fault conditions
Display is blank	Control voltage is absent	Check control wiring and proper polarity. Correct if necessary
Starting	Two or three power phases are missing	Check power system

Table 11.4 Motor Rotates (but does not accelerate to full speed)

Display	Possible Cause	Possible Solutions
Fault displayed	See fault description	See Table 11.12 addressing fault conditions
Starting	Mechanical problems Inadequate Current Limit setting Failed control module	Check for binding or external loading and correct Check motor Adjust the Current Limit level to a higher setting Replace control module

Table 11.5 Motor Stops While Running

Display	Possible Cause	Possible Solutions
Fault displayed	See fault description	See Table 11.12 addressing fault conditions
RUN LED is blank	Control voltage is absent Failed control module	Check control wiring and correct if necessary Replace control module
Starting	Two or three power phases are missing Failed control module	Check power system Replace control module

Table 11.6 Miscellaneous Situations

Display	Possible Cause	Possible Solutions
Motor current and voltage fluctuates with steady load	Motor Erratic load	Verify type of motor as a standard squirrel cage induction motor Check load conditions
Erratic operation	Loose connections	Shut off **all** power to controller and check for loose connections
Accelerates too fast	Starting time Initial torque Current limit setting Kickstart	Increase starting time Lower initial torque setting Decrease current limit setting Lower kickstart time or turn off
Accelerates too slow	Starting time Initial torque Current limit setting Kickstart	Decrease starting time Increase initial torque setting Increase current limit setting Increase kickstart time or turn off
Motor stops too quickly with Soft Stop	Time setting	Verify the programmed stopping time and correct it or increase
Motor stops too slowly with Soft Stop	Stopping time setting Misapplication	Verify the programmed stopping time and correct if necessary The Soft Stop is intended to extend the stopping time for loads that stop suddenly when power is removed from the motor

Bulletin 284 Troubleshooting Fault Definitions

Some of the Bulletin 284 ArmorStart Distributed Motor Controller faults are detected by the internal hardware of the ArmorStart, while others are detected by the internal drive. For internal drive faults, the internal hardware of the ArmorStart simply polls the drive for the existence of faults and reports the fault state. No fault latching is done by the internal hardware of the ArmorStart for these faults. The Pr FltReset Mode parameter (Parameter 23) determines the Auto Resettability of only the faults that are detected on the main control board. These faults are listed as “param 23” autoresettable in 11.7. The Auto Resettability of the faults that are detected in the internal drive is controlled by internal drive parameters. These faults are listed as drive controlled in 11.7.The following flowchart for Bulletin 284 units, is provided to aid in quick troubleshooting.

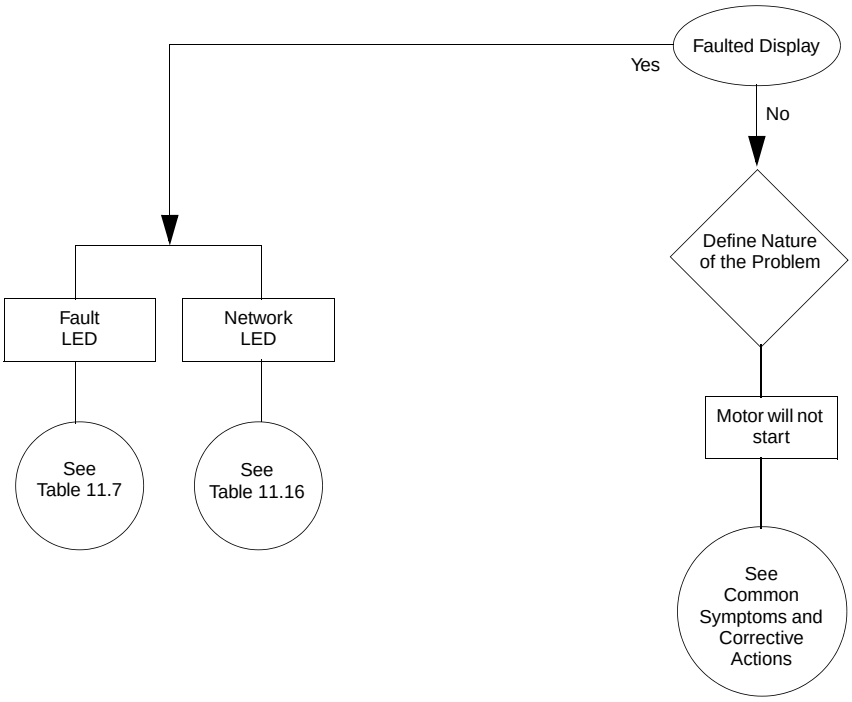

Table 11.7 Fault LED indications for Bulletin 284 ArmorStart Distributed Motor Controllers

Blink Pattern	Fault Definitions		Possible Causes or Remedies
	ArmorStart	Drive Controlled	
1	Short (140M)	—	The circuit breaker has tripped. Try to reset the breaker. If the condition continues check the power wiring. This fault cannot be disabled.
2	—	Overload Fault (Drive Error Codes 7 and 64)	An excessive motor load exists. Reduce load so drive output current does not exceed the current set by Parameter 133 (Motor OL Current) and verify Parameter 184 (Boost Select) setting. Reduce load or extend Accel Time. This fault cannot be disabled.
3	—	Phase Short (Drive Error Codes 41…43)	The ArmorStart has detected a phase short. Excessive current has been detected between two of the output terminals. Check the motor for a shorted condition. Replace starter module if fault cannot be cleared. This fault cannot be disabled.
4	—	Ground Fault (Drive Error Codes 13, 38…40)	A current path to earth has been detected at or more of the drive output terminals or a phase to ground fault has been detected between the drive and motor in this phase. Check the motor for a grounded condition. Replace starter module if fault cannot be cleared. This fault cannot be disabled.
5	—	Motor Stalled (Drive Error Code 6)	Drive is unable to accelerate motor. Increase Parameter 139 and/or 167 (Accel Time x) or reduce load so drive output current does not exceed the current by Parameter 189. This fault cannot be disabled.
6	Control Power	—	The ArmorStart has detected a loss of the control power voltage. Check control voltage, wiring and proper polarity. Replace control voltage fuse if necessary. This fault can be disabled and *is* disabled by default.
7	IO Fault	—	Depending on the types of modules in the configuration this error could be generated by a shorted sensor, shorted input device, wiring mistakes, or a blown output fuse. If this fault occurs, the offending problem should be isolated or removed prior to restarting the system. This fault can be disabled and *is* disabled by default.
8	—	Heatsink Over temperature (Drive Error Code 8)	Heatsink temperature exceeds a predefined value. Check for blocked or dirty heatsink fins. Verify that ambient temperature has not exceeded. Replace internal fan. This fault cannot be disabled.
9	—	Over-Current (Drive Error Codes 12 and 63)	The ArmorStart has detected a voltage imbalance. Check the power system and correct if necessary. This fault cannot be disabled.
10	DNet Power Loss	—	DeviceNet™ power has been lost or has dropped below the 12V threshold. Check the state of the network power supply and look for DeviceNet media problems. This fault can be disabled and *is* disabled by default.
11	Internal Comm	—	This fault occurs when communications between the main board the drive is lost. This fault cannot be disabled. This fault cannot be disabled. Verify that the disconnect is in the “on” position and three phase power is present.
12	—	DC Bus Fault (Drive Error Codes 3, 4, and 5)	DC bus voltage remained below 85% of nominal. DC bus voltage fell below the minimum value. DC bus voltage exceeded maximum value. Monitor the incoming AC line for low voltage or line power interruption. Check input fuses. Monitor the AC line for high line voltage or transient conditions. Bus overvoltage can also be caused by motor regeneration. Extend the decel time or install a starter module with the dynamic brake option. This fault cannot be disabled.
13	—	EEPROM Fault/Internal Comm Flt (Drive Error Codes 81 and 100)	This is a major fault, which renders the ArmorStart inoperable. Possible causes of this fault are transients induced during EEprom storage routines. If the fault was initiated by a transient, power cycling should clear the problem. Otherwise replacement of the starter module may be required. This fault cannot be disabled.
14	—	Hardware Fault (Drive Error Codes 2, 70, and 122)	Indicates incorrect base/starter assembly. Auxiliary input interlock is open. Failure has been detected in the drive power section. Failure has been detected in the Drive control and I/O section. Cycle power and replace drive if fault cannot be cleared. This fault cannot be disabled.
15	—	Auto Restart Tries (Drive Error Code 33)	Drive unsuccessfully attempted to reset a fault and resume running for the programmed number of Parameter 192 (Auto RstrtTries). Correct the cause of the fault. This fault cannot be disabled.
16	—	Miscellaneous Fault	This fault is actually the logical OR of the drive’s Auxiliary Input fault (Fault Code 2), Heatsink Overtemperature fault (Fault Code 8), Parameter Defaulted fault (Fault Code 48), and SVC Autotune fault (Fault Code 80), Fan RPM Fault, and DB1 Fault. This fault cannot be disabled.

Operation and Troubleshooting of the DB1 - Dynamic Brake

The DB1 Dynamic Brake option provides the following protection features:

- DB Resistor Overtemperature Fault
- DB Overcurrent Fault
- DB Undercurrent Fault
- DB Switch Fault
- DB Open Fault
- DB VBus Link Fault
- DB Thermal Warning
- DB Comm Fault

DB Resistor Overtemperature Fault

The DB1 measures current continuously, and models resistor body temperature based on measured current and resistor model parameters. The DB1 not only calculates the present resistor body temperature, but also predicts the future resistor body temperature. The resistor overtemperature level is based on the predicted future resistor body temperature, not on the present resistor body temperature. This fault is disabled when parameter 182 (DB Resistor Sel) is “Disabled.

Troubleshooting – DB Resistor body temperature is too hot. Allow resistor to cool.

DB Overcurrent Fault

The DB1 compares each current measurement against the Max Current Level. If 5 consecutive samples are above the Max Current Level, then a fault is recorded. This fault is intended to notify the user if the DB resistance is lower than expected. This fault is disabled when parameter 182 (DB Resistor Sel) is “Disabled.

Troubleshooting – DB monitor has measured a DB current higher than expected. Turn off all power to unit. Allow at least 3 minutes for capacitors to discharge. Disconnect DB resistor from ArmorStart control module. Caution- DB resistor may still be hot. Measure DB resistor value at the connector with an ohmmeter. DB resistor value should be within the limits defined in Table 11.8. If DB resistance value is within limits, replace control module. If not, replace DB resistor.

DB Undercurrent Fault

The DB1 compares each current measurement against the Min Current Level. The Min Current Level = Min DB Voltage Level/Max DB Resistance. If 5 consecutive samples are below the Min Current Level and the DB is ON, then a fault is recorded. This fault is intended to notify the user if the DB resistance is higher than expected. This fault is disabled when parameter 182 (DB Resistor Sel) is “Disabled.

Troubleshooting – DB monitor has measured a DB current lower than expected. Turn off all power to unit. Allow at least 3 minutes for capacitors to discharge. Disconnect DB resistor from ArmorStart control module. Caution- DB resistor may still be hot. Measure DB resistor value at the connector with an ohmmeter. DB resistor value should be within the limits defined in Table 11.8. If DB resistance value is within limits, replace control module. If not, replace DB resistor.

DB Switch Fault

A DB Switch fault is issued when continuous DB resistor current is detected when the Drive Bus Voltage level is less than the DB Voltage Level. If 5 consecutive samples of Drive Bus Voltage less than DB Level is detected along with continuous DB resistor current flow, then a shorted DB IGBT fault (DB Switch) is recorded.

It is the user's responsibility to provide an input power contactor to each ArmorStart with a drive. The user must write logic to control (open) the input contactor to the ArmorStart in the event of a DB Switch Fault. The Instruction Literature provides information on how to connect the input contactor, and how to implement the logic.

Troubleshooting – Attempt to reset the fault by removing all power to the unit and restarting. If the fault persists, replace control module.

DB Open Fault

A DB Open fault is issued when Bus Voltage is greater than the DB Voltage Level, and no DB resistor current has been detected. If 5 consecutive samples of Drive Bus Voltage greater than the DB Level is detected along with no DB resistor current flow, then an open DB fault is recorded. This fault is intended to notify the customer of an open DB resistor, or open wire. The fault is disabled when the DB Resistor Setup parameter (82) is "Disabled".

Troubleshooting – DB monitor expected to see current flow and measured none. Likely cause is an open DB resistor, loose DB resistor connector, or open wire in DB cable. Check DB cable connector for tightness. If problem persists, remove DB resistor cable connector from unit and check DB resistance. If DB resistor is open, replace DB resistor. Otherwise replace control module.

DB Thermal Warning

A DB Thermal Warning is issued if the predicted future resistor body temperature is greater than the Max DB resistor temperature x DB Thermal Warning Percent.

Troubleshooting – None. DB resistor thermal value has exceeded the preset threshold of 90% of thermal value.

DB VBus Link Fault

For proper operation, the DB1 monitors parameters from the Drive internally inside the ArmorStart. If the internal communications to the drive is lost, then this fault is issued. Since the DB1 can no longer provide resistor protection, the user must implement logic to open the input contactor.

Troubleshooting – Make sure that 3 phase line power and control power is applied to unit. Attempt to reset fault. If fault persists, replace control module.

DB Comm Fault

The communications link is monitored continuously. If the DB1 stops responding, then the MCB issues this fault. Since the DB1 can no longer provide resistor protection, the user must implement logic to open the input contactor.

Troubleshooting – Replace control module.

Table 11.8 IP67 Dynamic Brake Resistance Values

Line Voltage [V AC]	DB1 Resistor Part Number	Drive [kW (Hp)]	Minimum DB Resistance [Ω]	Maximum DB Resistance [Ω]
230	284R-091P500-M*	0.37 (0.5)	86.35	97.91
	284R-091P500-M*	0.75 (1)	86.35	97.91
	284R-091P500-M*	1.5 (2)	86.35	97.91
460	284R-360P500-M*	0.37 (0.5)	341.62	387.33
	284R-360P500-M*	0.75 (1)	341.62	387.33
	284R-360P500-M*	1.5 (2)	341.62	387.33
	284R-120P1K2-M*	2.2 (3)	113.87	129.11
	284R-120P1K2-M*	3.3 (5)	113.87	129.11
600	284R-360P500-M*	0.37 (0.5)	341.62	387.33
	284R-360P500-M*	0.75 (1)	341.62	387.33
	284R-360P500-M*	1.5 (2)	341.62	387.33
	284R-120P1K2-M*	2.2 (3)	113.87	129.11
	284R-120P1K2-M*	3.3 (5)	113.87	129.11

* - Indicates cable length (0.5 m or 1.0 m).

Internal Drive Faults

A fault is a condition that stops the drive. There are two fault types.

Type	Description
1	Auto-Reset/Run When this type of fault occurs, and Parameter 192 (Auto Rstrt Tries) Related Parameter(s): 155, 158, 161, 193 is set to a value greater than 0, a user-configurable timer, Parameter 193 (AutoRstrt Delay) Related Parameter(s): 192, begins. When the timer reaches zero, the drive attempts to automatically reset the fault. If the condition that caused the fault is no longer present, the fault will be reset and the drive will be restarted
2	Non-Resettable This type of fault may require drive or motor repair, or is caused by wiring or programing errors. The cause of the fault must be corrected before the fault can be cleared.

Automatically Clearing Faults (Option/Step)

Clear a Type 1 Fault and Restart the Drive

1. Set Parameter 192 (Auto Rstrt Tries) to a value other than **0**.
2. Set Parameter 193 (Auto Rstrt Delay) to a value other than **0**.

Clear an Overvoltage, Undervoltage or Heatsink OvrTmp Fault without Restarting the Drive

1. Set 192 (Auto Rstrt Tries) to a value other than **0**.
2. Set 193 (Auto Rstrt Delay) to **0**.

Auto Restart (Reset/Run)

The Auto Restart feature provides the ability for the drive to automatically perform a fault reset followed by a start attempt without user or application intervention. This allows remote or unattended operation. Only certain faults are allowed to be reset. Certain faults (Type 2) that indicate possible drive component malfunction are not resettable.Caution should be used when enabling this feature, since the drive will attempt to issue its own start command based on user selected programming.

Table 11.9 Fault Types, Descriptions, and Actions

No.	Fault	Type ❶	Description	Action
F2	Auxiliary Input	1	Auxiliary input interlock is open.	1. Check remote wiring. 2. Verify communications.
F3	Power Loss	2	DC bus voltage remained below 85% of nominal.	3. Monitor the incoming AC line for low voltage or line power interruption. 4. Check input fuses.
F4	UnderVoltage	1	DC bus voltage fell below the minimum value.	5.Monitor the incoming AC line for low voltage or line power interruption.
F5	OverVoltage	1	DC bus voltage exceeded maximum value.	6.Monitor the AC line for high line voltage or transient conditions. Bus overvoltage can also be caused by motor regeneration. Extend the decel time or install dynamic brake option.
F6	Motor Stalled	1	Drive is unable to accelerate motor.	7.Increase Parameter 139…167 (Accel Time x) or reduce load so drive output current does not exceed the current set by Parameter 189 (Current Limit 1).
F7	Motor Overload	1	Internal electronic overload trip	8. An excessive motor load exists. Reduce load so drive output current does not exceed the current set by Parameter 133 (Motor OL Current). 9. Verify Parameter 184 (Boost Select) setting
F8	Heatsink OvrTmp	1	Heatsink temperature exceeds a predefined value.	10. Check for blocked or dirty heat sink fins. Verify that ambient temperature has not exceeded 40°C. 11. Replace internal fan.
F12	HW OverCurrent	2	The drive output current has exceeded the hardware current limit.	12.Check programming. Check for excess load, improper programming of Parameter 184 (Boost Select), DC brake volts set too high, or other causes of excess current.
F13	Ground Fault	2	A current path to earth ground has been detected at one or more of the drive output terminals.	13.Check the motor and external wiring to the drive output terminals for a grounded condition.
F33	Auto Rstrt Tries		Drive unsuccessfully attempted to reset a fault and resume running for the programmed number of Parameter 192 (Auto Rstrt Tries).	14.Correct the cause of the fault and manually clear.
F38 F39 F40	Phase U to Gnd Phase V to Gnd Phase W to Gnd	2	A phase to ground fault has been detected between the drive and motor in this phase.	15. Check the wiring between the drive and motor. 16. Check motor for grounded phase. 17. Replace starter module if fault cannot be cleared.
F41 F42 F43	Phase UV Short Phase UW Short Phase VW Short	2	Excessive current has been detected between these two output terminals.	18. Check the motor and drive output terminal wiring for a shorted condition. 19. Replace starter module if fault cannot be cleared.
F48	Params Defaulted	2	The drive was commanded to write default values to EEPROM.	20. Clear the fault or cycle power to the drive. 21. Program the drive parameters as needed.
F63	SW OverCurrent	2	Programmed Parameter 198 (SW Current Trip) has been exceeded.	22.Check load requirements and Parameter 198 (SW Current Trip) setting.
F64	Drive Overload	2	Drive rating of 150% for 1 min. or 200% for 3 sec. has been exceeded.	23.Reduce load or extend Accel Time.
F70	Power Unit	2	Failure has been detected in the drive power section.	24. Cycle power. 25. Replace starter module if fault cannot be cleared.
F80	SVC Autotune		The autotune function was either cancelled by the user or failed.	26.Restart procedure.

No.	Fault	Type ❶	Description	Action
F81	Comm Loss	2	RS485 (DSI) port stopped communicating.	27. Turn off using Parameter 205 (Comm Loss Action). 28. Replace starter module if fault cannot be cleared.
F100	Parameter Checksum	2	The checksum read from the board does not match the checksum calculated.	29.Set Parameter 141 (Reset To Defaults) to option 1 **Reset Defaults**.
F122	I/O Board Fail	2	Failure has been detected in the drive control and I/O section.	30. Cycle power. 31. Replace starter module if fault cannot be cleared.

❶ See Table 11.7 for internal drive fault types.Common Symptoms and Corrective Actions

Table 11.10 Motor Does Not Start

Cause(s)	Indication	Corrective Action
No output voltage to the motor.	None	Check the power circuit. • Check the supply voltage. • Check all fuses and disconnects Check the motor. • Verify that the motor is connected properly. • Verify that I/O Terminal 01 is active. • Verify that Parameter 136 (Start Source) matches your configuration. • Verify that Parameter 195 (Reverse Disable) is not prohibiting movement.
Drive is Faulted	Flashing red status light	Clear fault. • Press Stop • Cycle power • Set Parameter 200 (Fault Clear) to option 1 **Clear Faults**. • Cycle digital input is Parameter 151…154 (Digital Inx Sel) is set to option 7 **Clear Fault**.

Table 11.11 Drive Does Not Respond to Changes in Speed Command

Cause(s)	Indication	Corrective Action
No value is coming form the source of the command.	The drive **Run** indicator is lit and output is 0 Hz.	• Check Parameter 112 (Control Source) for correct source. • If the source is an analog input, check wiring and use a meter to check for presence of signal. • Check Parameter 102 (Commanded Freq) to verify correct command.
Incorrect reference source is being selected via remote device or digital inputs.	None	• Check Parameter 112 (Control Source) for correct source. • Check Parameter 114 (Dig In Status) to see if inputs are selecting an alternate source. Verify settings for Parameters 151…154 (Digital Inx Sel). • Check Parameter 138 (Speed Reference) for the source of the speed reference. Reprogram as necessary.

Table 11.12 Motor and/or Drive Will Not Accelerate to Commanded Speed

Cause(s)	Indication	Corrective Action
Acceleration time is excessive.	None	Reprogram Parameter 139 (Accel Time 1) or Parameter 167 (Accel Time 2).
Excess load or short acceleration times force the drive into current limit, slowing, or stopping acceleration.	None	• Compare Parameter 103 (Output Current) with Parameter 189 (Current Limit1). • Remove excess load or reprogram Parameter 139 (Accel Time 1) or Parameter 167 (Accel Time 2). • Check for improper setting of Parameter 184 (Boost Select).
Speed command source or value is not as expected.	None	• Verify Parameter 102 (Commanded Freq). • Check Parameter 112 (Control Source) for the proper Speed Command.
Programming is preventing the drive output from exceeding limiting values.	None	Check Parameter 135 (Maximum Freq) to insure that speed is not limited by programming.
Torque performance does not match motor characteristics.	None	• Set motor nameplate full load amps in Parameter 226 (Motor NP FLA). • Use Parameter 227 (Autotune) to perform **Static Tune** or **Rotate Tune** procedure. • Set Parameter 225 (Torque Perf Mode) to option 0V/Hz.

Table 11.13 Motor Operation is Unstable

Cause(s)	Indication	Corrective Action
Motor data was incorrectly entered.	None	1. Correctly enter motor nameplate data into Parameters 131, 132, and 133. 2. Enable Parameter 197 (Compensation). 3. Use Parameter 184 (Boost Select) to reduce boost level.

Table 11.14 Drive Will Not Reverse Motor Direction

Cause(s)	Indication	Corrective Action
Digital input is not selected for reversing control.	None	Check (Digital Inx Sel). Choose correct input and program for reversing mode.
Motor wiring is improperly phased for reverse.	None	Switch two motor leads.
Reverse is disabled.	None	Check Parameter 195 (Reverse Disable).

Table 11.15 Drive Does Not Power Up

Cause(s)	Indication	Corrective Action
No input power to drive.	None	Check the power circuit. • Check the supply voltage. • Check all fuses and disconnects.
Jumper between I/O Terminals P2 and P1 not installed and/or DC Bus Inductor not connected.	None	Install jumper or connect DC Bus Inductor.

DeviceNet Troubleshooting Procedures

The following table identifies possible causes and corrective actions when troubleshooting DeviceNet related failures using the *NETWORK STATUS LED*.

Table 11.16 DeviceNet Troubleshooting Procedures

Network Status LED	Definition	Possible Causes
Off	The device has not completed the initialization, is not on an active network, or may not be powered up.	Check to make sure the product is properly wired and configured on the network.
Flashes green-red-off	While waiting to detect the network baud rate, the LED will flash this pattern about every 3 seconds.	If the product stays in this state, it means that there is no set baud rate. Ensure that at least one device on the network has a set baud rate.
Solid Green	The device is operating in a normal condition, and is communicating to another device on the network.	No action Required
Flashing Green	The device is operating in a normal condition, and is on-line, but has no connection to another device. This is the typical state for new devices.	The device may need to be mapped to a master scanner, placed in a scanlist, or have another device communicate to it.
Flashing Red	Recoverable fault has occurred.	Check to make sure the PLC™ and scanner are operating correctly and that there are no media/ cabling issues. Check to see if other networked devices are in a similar state.
Solid Red	The device has detected a major error that has rendered it incapable of communicating on the network (Duplicate MAC ID, Bus-off, media issue).	Troubleshooting should be done to ensure that the network is correct (terminators, lengths, etc.) and there is not a duplicate node problem. If other devices on the network appear to be operating fine and power cycling the device does not work, contact Technical Support.
Flashing Red and Green	The device has detected a network access error and is in a communication faulted state. The device has subsequently received and accepted an Identify Communication Faulted Request Long Protocol message.	This is not a common state for DeviceNet products. Power cycling the device may resolve the problem; however, if the problem continues, it may be necessary to contact technical support.

Control Module Replacement (Bulletin 280/281)

Removal of Starter Module

ATTENTION To avoid shock hazard, disconnect main power before working on the controller, motor, or control devices

1) Disconnect from power source

2) Remove motor cable.

3) Loosen the four mounting screws.

4) Unplug the Control module from the base by pulling forward.

Installation of Control Module

5) Install control module.

6) Tighten four mounting screws.

7) Install motor cable.

Figure 11.1 Bulletin 280/281 Control Module Replacement

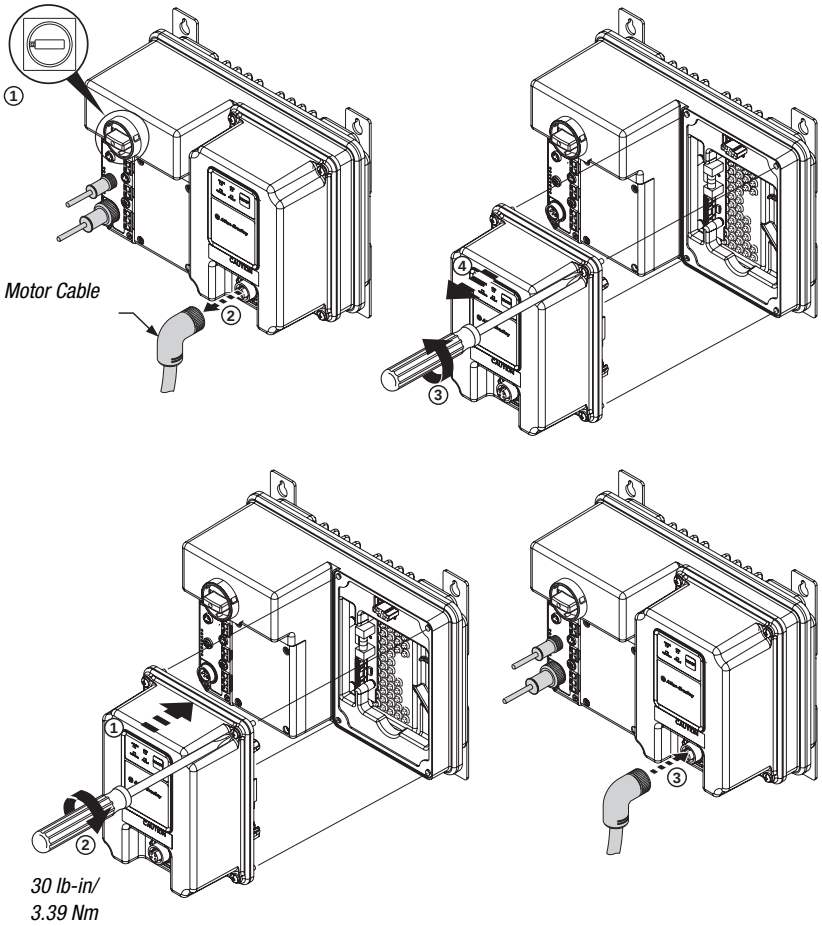

Note: DeviceNet base module is shown

Control Module Replacement (Bulletin 284)

ATTENTION To avoid shock hazard, disconnect main power before working on the controller, motor, or control devices

Removal of Control Module

1) Disconnect from power source

2) Remove motor cable.

3) Loosen the four mounting screws.

4) Unplug the Control module from the base by pulling forward.

Installation of Control Module

5) Install control module.

6) Tighten four mounting screws.

7) Install all cables to starter module.

Figure 11.2 Bulletin 284 Control Module Replacement

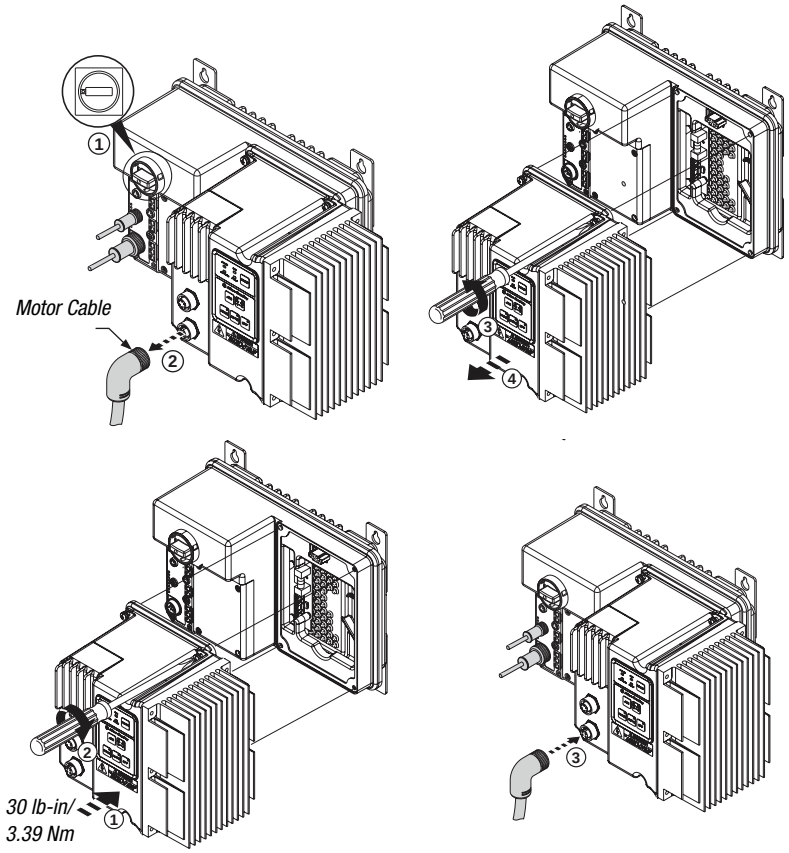

Note: DeviceNet base module is shown

Base Module Replacement (Bulletin 280/281)

Removal of Base Module

ATTENTION To avoid shock hazard, disconnect main power before working on the controller, motor, or control devices

1) Disconnect from power source.

2) Remove motor cable, comunication cables and all others connected to the inputs and outputs.

3) Loosen four mounting screws on the Starter Module.

4) Unplug the Control Module from the base by pulling forward.

5) Loosen four mounting screws on the Terminal Access Cover Plate.

6) Remove cover plate.

7) Loosen terminal screws.

8) Remove all wires from terminal block.

Figure 11.3 Bulletin 280/281 Base Module Removal

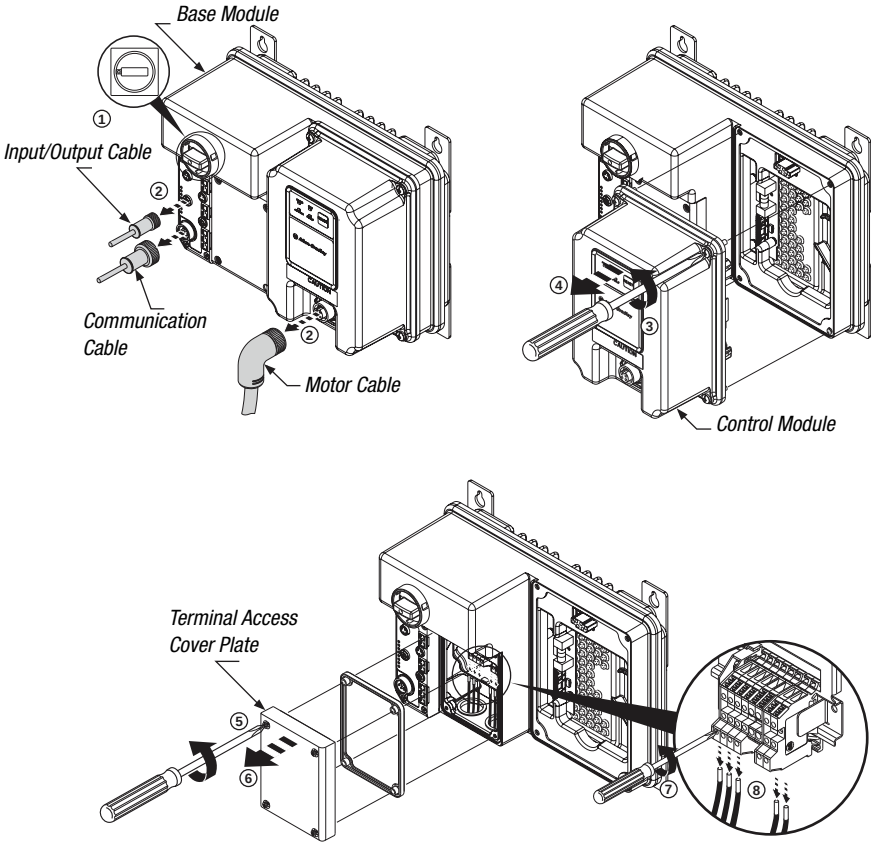

Note: DeviceNet base module is shown

Base Module Replacement (Bulletin 280/281)

Installation of Base Module

ATTENTION To avoid shock hazard, disconnect main power before working on the controller, motor, or control devices

1) Mount Base Module with four mounting screws.

2) Re-install conduit fittings and wires onto terminal block.

3) Tighten the terminal screws.

4) Install terminal cover plate.

5) Tighten four mounting screws on the terminal access cover plate.

6) Install Control Module.

7) Tighten the four mounting screws.

8) Install motor cable, comunication cables and all others connected to the inputs and outputs.

Figure 11.4 Bulletin 280/281 Base Module Installation

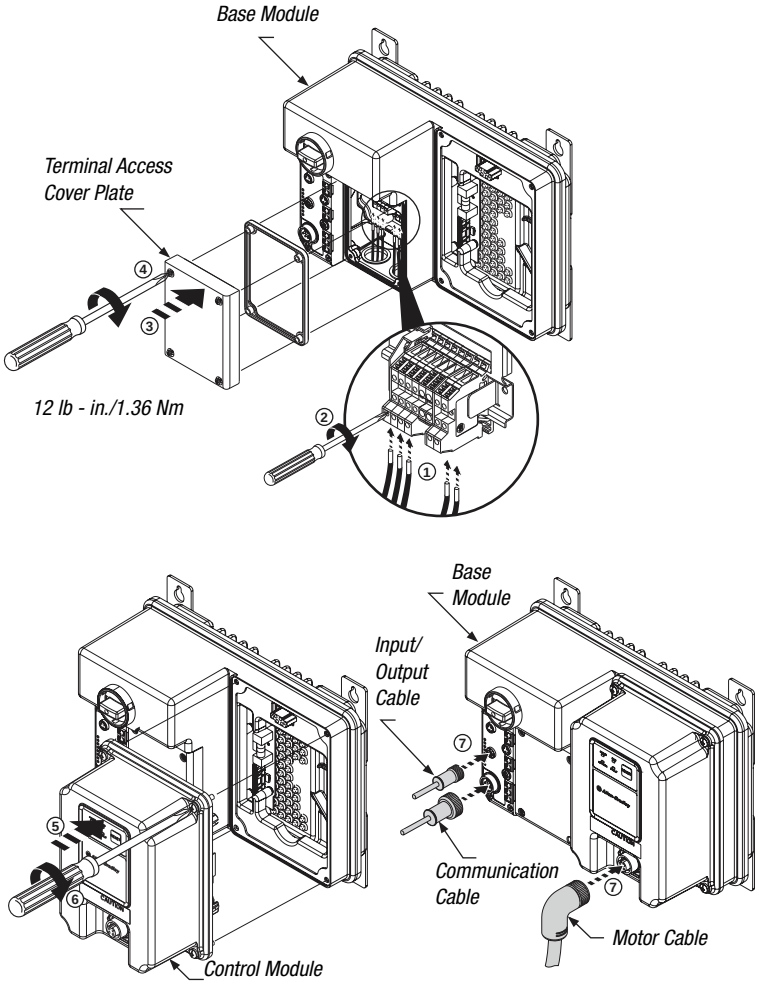

Base Module Replacement (Bulletin 284)

Removal of Base Module

ATTENTION

To avoid shock hazard, disconnect main power before working on the controller, motor, or control devices

1) Disconnect from power source.

2) Remove all cables from Starter Module, comunication cables and all others connected to the inputs and outputs.

3) Loosen four mounting screws on the Control Module.

4) Unplug Control Module from the base by pulling forward.

5) Loosen four mounting screws on the Terminal Access Cover Plate.

6) Remove cover plate.

7) Loosen terminal screws.

8) Remove all wires from terminal block.

9) Remove conduit fittings.

10) Loosen mounting screws and remove.

Figure 11.5 Bulletin 284 Base Module Removal

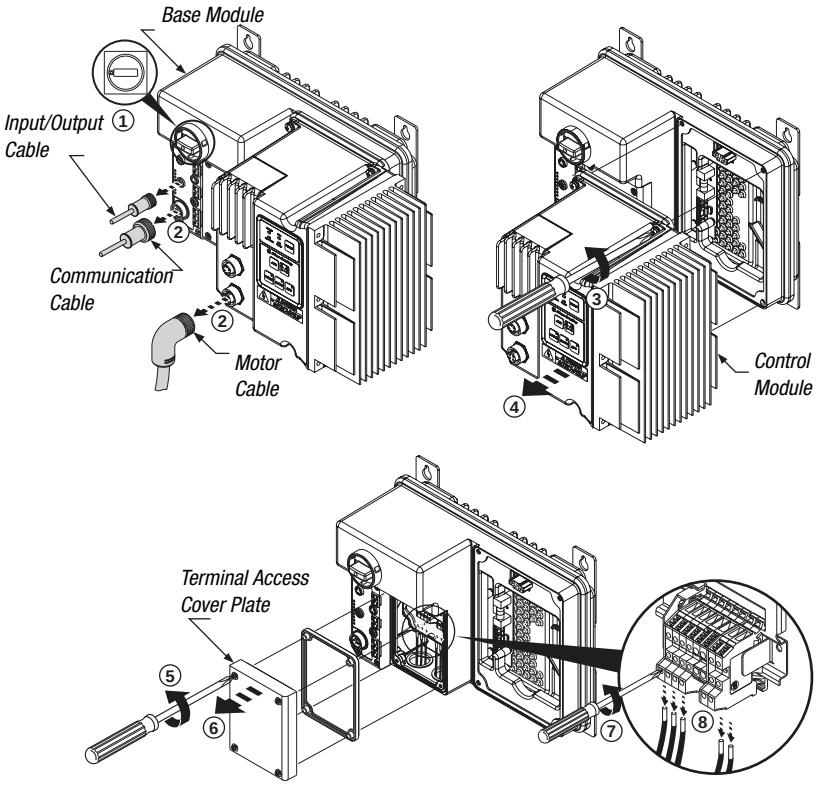

Base Module Replacement (Bulletin 284)

ATTENTION To avoid shock hazard, disconnect main power before working on the controller, motor, or control devices

Installation of Base Module

1) Mount Base Module with four mounting screws.

2) Re-install conduit fittings and wires onto terminal block.

3) Tighten terminal screws.

4) Install terminal cover plate.

5) Tighten four mounting screws on the terminal access cover plate.

6) Install Control Module.

7) Tighten four mounting screws.

8) Install all cables to Control Module, comunication cables and all others connected to the inputs and outputs.

Figure 11.6 Bulletin 284 Base Module Installation

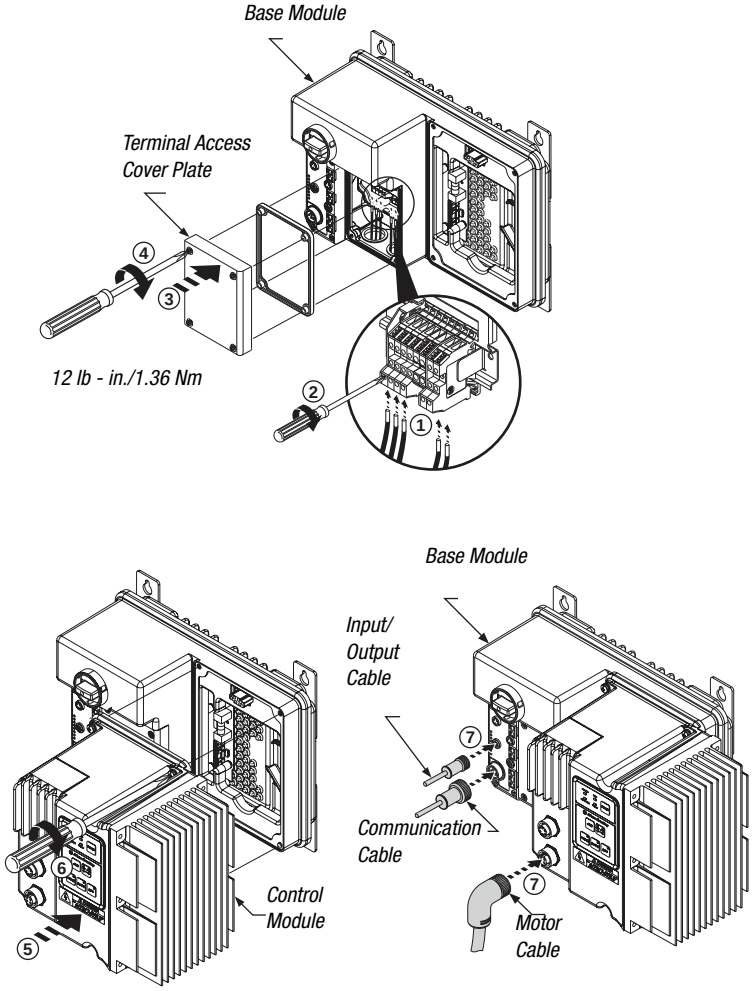

Figure 11.7 Control Voltage and Output Fuse Replacement

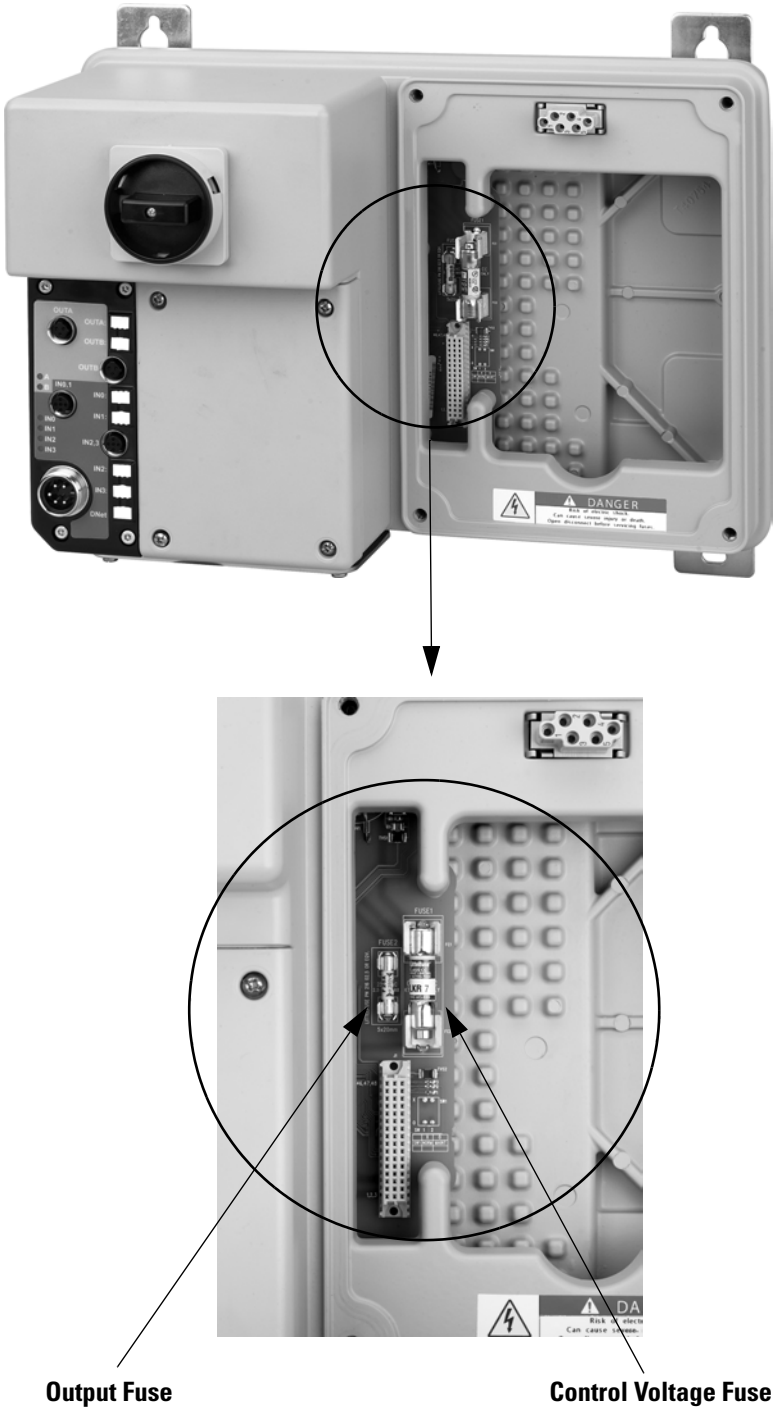

Figure 11.8 Source Brake Fuse Replacement (Bulletin 284 only)

Source/ Control Brake Fuses

Notes:

Specifications

Bulletin 280/281

Electrical Ratings			UL/NEMA	IEC
Power Circuit	Rated Operation Voltage		380Y/220…480Y/277V AC	380Y/220…480Y/277V AC
	Rate Insulation Voltage		600V	
	Rated Impulsed Voltage		4 kV	
	Dielectric Withstand		2200V AC	2500V AC
	Operating Frequency		50/60 Hz	
	Utilization Category		N/A	AC-3
	Protection Against Shock		N/A	IP2X
	Rated Operating Current Max.		2.5 A	
			5.5 A	
			16 A	
Control Circuit	Rated Operation Voltage		24V DC (+10%, -15%) A2 (should be grounded at voltage source)	
	Rate Insulation Voltage		250V	
	Rated Impulsed Voltage		—	4 kV
	Dielectric Withstand		1500V AC	2000V AC
	Overvoltage Category		—	III
	Operating Frequency		50/60 Hz	
Short Circuit Protection	SCPD Performance Type 1 Sym. Amps RMS @ 480Y/277V	Current Rating		
		0.5…2.5 A	65kA	
		1.1…5.5 A		
		3.2…16 A	30kA	
	SCPD List		Size per NEC Group Motor	—

Power Requirements			
	Units	**W/O HOA**	**W/ HOA**
Control Voltage	Volts	24V DC	24V DC
Contactor (Pick Up)	Amps	1.09	1.09
Contactor (Hold In)	Amps	0.30	0.30
Total Control Power (Pick Up)	VA (W)	(26.0 W)	(26.0 W)
Total Control Power (Hold In)	VA (W)	(7.2 W)	(7.2 W)
External Devices powered by Control Voltage			
Outputs (2) 1 A max. each)	Amps	2	2
Total Control (Pick Up) with max. outputs	VA (W)	(65.0 W)	(73.0 W)
Total Control (Hold In) with max. outputs	VA (W)	(50.0 W)	(58.0 W)

Input Ratings	Rated Operation Voltage	24V DC	
	Input On-State Voltage Range	10…26V DC	
	Input On-state Current	3.0 mA @ 10V DC	
		7.2 mA @ 24V DC	
	Input Off-state Voltage Range	0…5V DC	
	Input Off-state Current	<1.5 mA	
	Input Filter — Software Selectable		
	Off to On	Settable from 0…64 ms in 1 ms increments	
	On to Off	Settable from 0…64 ms in 1 ms increments	
	Input Compatibility	N/A	IEC 1+
	Number of inputs	4	
	Sensor Source		
	Voltage Status Only	11…25V DC from DeviceNet™	
	Current Available	50 mA MAX per Input, 200 mA Total	
Output Ratings (Sourced from Control Circuit)	Rated Operation Voltage	240V AC / 30V DC	240V AC / 30V DC
	Rate Insulation Voltage	250V	250V
	Backplane Current Load	400 mA	
		50/60 Hz	50/60 Hz
	Type of control circuit	Electromechanical Relay	
	Kind of Current	AC/DC	
	Conventional Thermal Current I_{th}	Total of both outputs ≤ 2 A	
	Type of Contacts	Normally Open (N.O.)	
	Number of Contacts	2	

Bulletin 280/281, Continued

Electrical Ratings		UL/NEMA	IEC
Environmental	Operating Temperature Range	-20…40°C (-4…104°F)	
	Storage and Transportation temperature range	–25….85°C (–13…185°F)	
	Altitude	2000 m	
	Humidity	5…95% (non-condensing)	
	Pollution Degree	3	
	Enclosure Ratings	NEMA 4/12/13	IP67 or IP69K
	Approximate Shipping Weight	6.8 kg (15 lbs.)	
	Mechanical Resistance to Shock		
	Operational	15 G	
	Non-Operational	30 G	
	Resistance to Vibration		
	Operational	1 G, 0.15 mm (0.006 in.) displacement	
	Non-Operational	2.5 G, 0.38 mm (0.015 in.) displacement	
	Power and Ground Terminals		
	WireSize	Primary Terminal: #16…#10 AWG Secondary Terminal: #18…#10 AWG	Primary Terminal: 1.5…5.3 mm^2 Secondary Terminal: 0.8…5.3 mm^2
	Tightening Torque	Primary Terminal: 10.8 in·lb Secondary Terminal: 4.5 in·lb	Primary Terminal: 1.2 N·m Secondary Terminal: 0.5 N·m
	Wire Strip Length	0.35 in. (9 mm)	
	Control and Safety Monitor Inputs		
	WireSize	#18…#10 AWG	1.0 …4.0 mm^2
	Tightening Torque	6.2 in·lb	0.7 N·m
	Wire Strip Length	0.35 in. (9 mm)	
Other Rating	**EMC Emission levels**		
	Conducted Radio Frequency Emissions	Class A	
	Radiated Emissions	Class A	
	EMC immunity levels		
	Electrostatic Discharge	4 kV contact and 8 kV Air	
	Radio Frequency Electromagnetic Field	10 V/m	
	Fast Transient	2 kV	
	Surge Transient	1 kV L-L, 2 kV L-N (Earth)	
	Overload Characteristics		
	Overload Current Range	0.5…2.5 A	
		1.1…5.5 A	
		3.2…16 A	
	Trip Classes	10, 15, 20	
	Trip Rating	120% of FLC setting	
	Number of poles	3	
	DeviceNet Specifications		
	DeviceNet Supply Voltage Rating	Range 11…25V DC, 24V DC Nominal	
	DeviceNet Input Current	167 mA @ 24V DC - 4.0 W	
		364 mA @ 11V DC - 4.0 W	
	External Devices powered by DeviceNet	Sensors Inputs 4 * 50 mA - total 200 mA	
	Total w/max. Sensor Inputs (4)	367 mA @ 24V DC - 8.8 W	
	DeviceNet Input Current Surge	15 A for 250 µs	
	DeviceNet Communications		
	Baud Rates	125, 250, 500 kbps	
	Distance Maximum	500 m (1630 ft) @ 125 kbps	
		200 m (656 ft) @ 250 kbps	
		100 m (328 ft) @ 500 kbps	
	Certifications	cULus (File No. E3125) UL 508 EN/IEC 60947-4-1 CE Marked per Low Voltage Directive 73/23/EEC and EMC Directive 89/336/EEC	

Bulletin 280/281, Continued

Figure A.1 External Connections for Input Connector

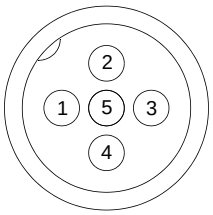

Pin 1: +V Out
Pin 2: Input
Pin 3: Comm
Pin 4: Input
Pin 5: NC (No Connection)

Figure A.2 External Connections for Output Connector

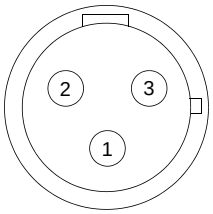

Pin 1: PE
Pin 2: Return
Pin 3: Relay Out

Figure A.3 External Connections for DeviceNet™ Connector

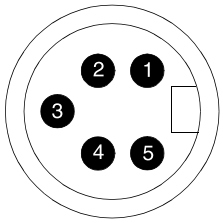

Pin 1: Drain (Not Connected)
Pin 2: + VDNET
Pin 3: -VDNET
Pin 4: CAN_H
Pin 5: CAN_L

Figure A.4 External Connections for Motor Connector (≤ 3 Hp @ 460V AC)

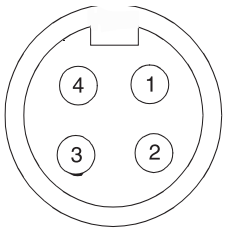

Pin 1: T1 - Black
Pin 2: T2 - White
Pin 3: T3 - Red
Pin 4: Ground - Green/Yellow

Figure A.5 External Connections for Motor Connector (> 3 Hp @ 460V AC)

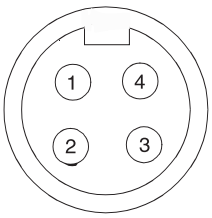

Pin 1: T1 - Black
Pin 2: Ground - Green/Yellow
Pin 3: T3 - Red
Pin 4: T2 - White

Figure A.6 Safety Monitor Input (SM1/SM2)

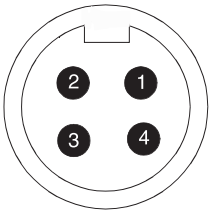

Pin 1: SM2- White
Pin 2: SM1 - Brown
Pin 3: N/C- No connection
Pin 4: N/C- No connection

Bulletin 280/281, Continued

Figure A.7 External Connections for Safety Input Power (A1/A2)

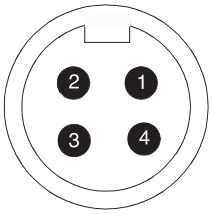

Pin 1: M - White
Pin 2: A1 - Brown
Pin 3: P - Black
Pin 4: A2 - Blue

Figure A.8 Overload Trip Curves

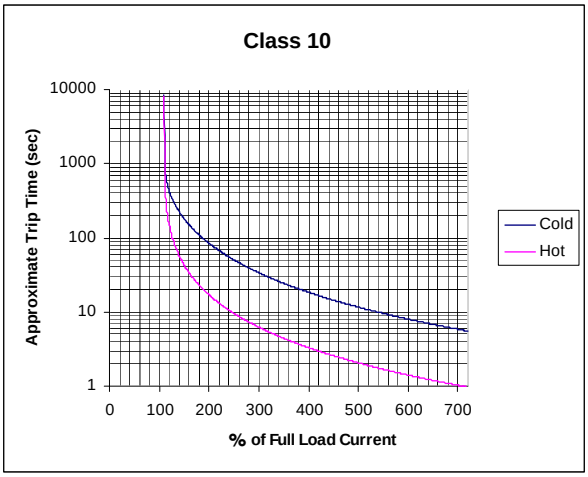

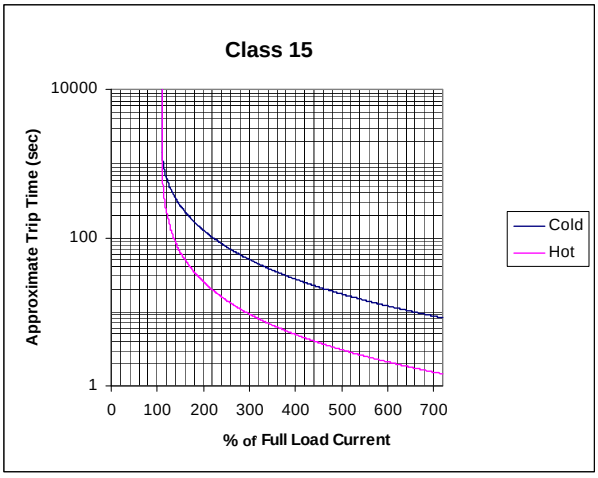

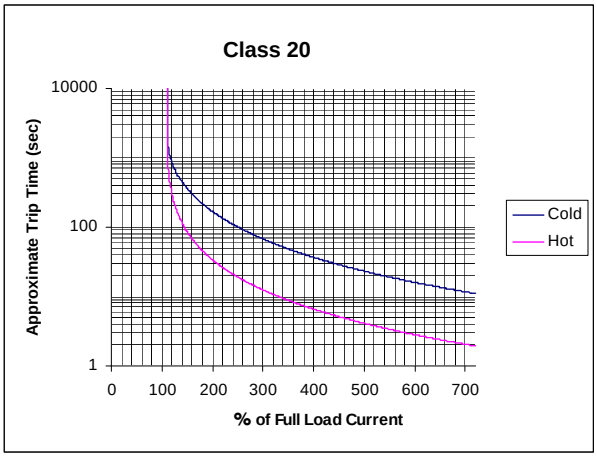

Bulletin 284

Electrical Ratings			UL/NEMA	IEC
Power Circuit	Rated Operation Voltage		380Y/220…480Y/277V AC	380Y/220…480Y/277V AC
	Rate Insulation Voltage		600V	
	Rated Impulsed Voltage		4 kV	
	Dielectric Withstand		2200V AC	2500V AC
	Operating Frequency		50/60 Hz	
	Utilization Category		N/A	AC-3
	Protection Against Shock		N/A	IP2X
Short Circuit Protection	SCPD Performance Sym. Amps RMS @ 480Y/277V	Current Rating		
		10 A	65 kA	
		25 A	30 kA	
	SCPD List		Size per NEC Group Motor	—
Control Circuit	Rated Operation Voltage		24V DC (+10%, -15%) A2 (should be grounded at voltage source)	
	Rate Insulation Voltage		250V	250V
	Rated Impulsed Voltage		—	4 kV
	Dielectric Withstand		1500V AC	2000V AC
	Overvoltage Category		—	III
	Operating Frequency		50/60 Hz	50/60 Hz

Power Requirements				
	Units	**No Options**	**Brake or Output Contactor**	**With Brake and Output Contactor**
Control Voltage	Volts	24V DC	24V DC	24V DC
Total Control (Pick Up)	VA (W)	(11.0 W)	(13.0 W)	(16.0 W)
Total Control (Hold In)	VA (W)	(11.0 W)	(13.0 W)	(16.0 W)
External Devices powered by Control Voltage				
Outputs (2) 1 A max. each	Amps	2	2	2
Total Control VA (Pick Up) with max. outputs	VA (W)	(59.0 W)	(61.0 W)	(64.0 W)
Total Control VA (Hold In) with max. outputs	VA (W)	(59.0 W)	(61.0 W)	(64.0 W)

Input Ratings	Rated Operation Voltage	24V DC	
	Input On-State Voltage Range	10…26V DC	
	Input On-state Current	3.0 mA @ 10V DC	
		7.2 mA @ 24V DC	
	Input Off-state Voltage Range	0…5V DC	
	Input Off-state Current	<1.5 mA	
	Input Filter — Software Selectable		
	Off to On	Settable from 0…64 ms in 1 ms increments	
	On to Off	Settable from 0…64 ms in 1 ms increments	
	Input Compatibility	N/A	IEC 1+
	Number of inputs	4	
	Sensor Source		
	Voltage Status Only	11…25V DC from DeviceNet™	
	Current Available	50 mA MAX per Input, 200 mA Total	
Output Ratings (Sourced from Control Circuit)	Rated Operation Voltage	240V AC / 30V DC	240V AC / 30V DC
	Rate Insulation Voltage	250V	250V
	Dielectric Withstand	1500V AC	2000V AC
	Operating Frequency	50/60 Hz	50/60 Hz
	Type of control circuit	Electromechanical Relay	
	Kind of Current	AC/DC	
	Conventional Thermal Current I_{th}	Total of both outputs ≤ 2 A	
	Type of Contacts	Normally Open (N.O.)	
	Number of Contacts	2	

Bulletin 284, Continued

Electrical Ratings		UL/NEMA	IEC
Environmental	Operating Temperature Range	-20…40°C (-4…104°F)	
	Storage and Transportation temperature range	–25….85°C (–13…185°F)	
	Altitude	2000 m	
	Humidity	5…95% (non-condensing)	
	Pollution Degree	3	
	Enclosure Ratings	NEMA 4/12/13	IP67 or IP69K
	Approximate Shipping Weight	18.1 kg (40 lbs.)	
	Mechanical Resistance to Shock		
	Operational	15 G	
	Non-Operational	30 G	
	Resistance to Vibration		
	Operational	1 G, 0.15 mm (0.006 in.) displacement	
	Non-Operational	2.5 G, 0.38 mm (0.015 in.) displacement	
	Power and Ground Terminals		
	WireSize	Primary Terminal: #16…#10 AWG Secondary Terminal: #18…#10 AWG	Primary Terminal: 1.5…5.3 mm^2 Secondary Terminal: 0.8…5.3 mm^2
	Tightening Torque	Primary Terminal: 10.8 in·lb Secondary Terminal: 4.5 in·lb	Primary Terminal: 1.2 N·m Secondary Terminal: 0.5 N·m
	Wire Strip Length	0.35 in. (9 mm)	
	Control and Safety Monitor Inputs		
	WireSize	#18…#10 AWG	1.0…4.0 mm^2
	Tightening Torque	6.2 in·lb	0.7 N·m
	Wire Strip Length	0.35 in. (9 mm)	
Other Rating	**EMC Emission levels**		
	Conducted Radio Frequency Emissions	Class A	
	Radiated Emissions	Class A	
	EMC immunity levels		
	Electrostatic Discharge	4 kV contact and 8 kV Air	
	Radio Frequency Electromagnetic Field	10 V/m	
	Fast Transient	2 kV	
	Surge Transient	1 kV L-L, 2 kV L-N (Earth)	
	Overload Characteristics		
	Trip Class	10	
	Overload Protection	I^2t overload protection - 150% for 60 seconds, 200% for 30 seconds	
	Number of poles	3	
	DeviceNet Specifications		
	DeviceNet Supply Voltage Rating	Range 11…25V DC, 24V DC Nominal	
	DeviceNet Input Current	167 mA @ 24V DC - 4.0 W	
		364 mA @ 11V DC - 4.0 W	
	External Devices powered by DeviceNet	Sensors Inputs 4 * 50 mA - total 200 mA	
	Total w/max. Sensor Inputs (4)	367 mA @ 24V DC - 8.0 W	
	DeviceNet Input Current Surge	15 A for 250 µs	
	DeviceNet Communications		
	Baud Rates	125, 250, 500 kbps	
	Distance Maximum	500 m (1630 ft) @ 125 kbps	
		200 m (656 ft) @ 250 kbps	
		100 m (328 ft) @ 500 kbps	
	Certifications	cULus (File No. E207834) UL 508C EN 50178, EN 61800-3, EN 60947-1 CE Marked per Low Voltage Directive 73/23/EEC and EMC Directive 89/336/EEC	

Bulletin 284, Continued

	Line Voltage	Frequency	3-Phase kW Rating	3-Phase Hp Rating	Output Current (A)	Input Current (A)
Drive Ratings	380	50	0.4	—	1.4	2.15
			0.75	—	2.3	3.80
			1.5	—	4.0	6.40
			2.2	—	6.0	9.00
			3.0	—	7.6	12.40
	460	60	—	0.5	1.4	1.85
			—	1	2.3	3.45
			—	2	4.0	5.57
			—	3	6.0	8.20
			—	5	7.6	12.5

IP67 Dynamic Brake Resistor Ratings

Table A.1 IP67 Dynamic Brake Resistor

						Application Type 1		Application Type 2	
Drive and Motor Size kW	**Part Number**	**Resistance Ohms ± 5%**	**Continuous Power kW**	**Max Energy kJ**	**Max Braking Torque % of Motor**	**Braking Torque % of Motor**	**Duty Cycle %**	**Braking Torque % of Motor**	**Duty Cycle %**
400-480 Volt AC Input Drives									
0.37 (0.5)	284R-360P500-M*	360	0.086	17	305%	100%	47%	150%	31%
0.75 (1)	284R-360P500-M*	360	0.086	17	220%	100%	23%	150%	15%
1.5 (2)	284R-360P500-M*	360	0.086	17	110%	100%	12%	110%	11%
2.2 (3)	284R-120P1K2-M*	120	0.26	52	197%	100%	24%	150%	16%
4 (5)	284R-120P1K2-M*	120	0.26	52	124%	100%	13%	124%	10%

* - Indicates cable length (0.5 m or 1.0 m).
Note: Always check the resistor ohms against minimum resistance for drive being used.
Note: Duty Cycle listed is based on full speed to zero speed deceleration. For constance regen at full speed, duty cycle capability is half of what is listed. Application Type 1 represents maximum capability up to 100% braking torque where possible. Application Type 2 represents more than 100% braking torque where possible, up to a maximum of 150%.

Figure A.9 Dynamic Brake Resistor

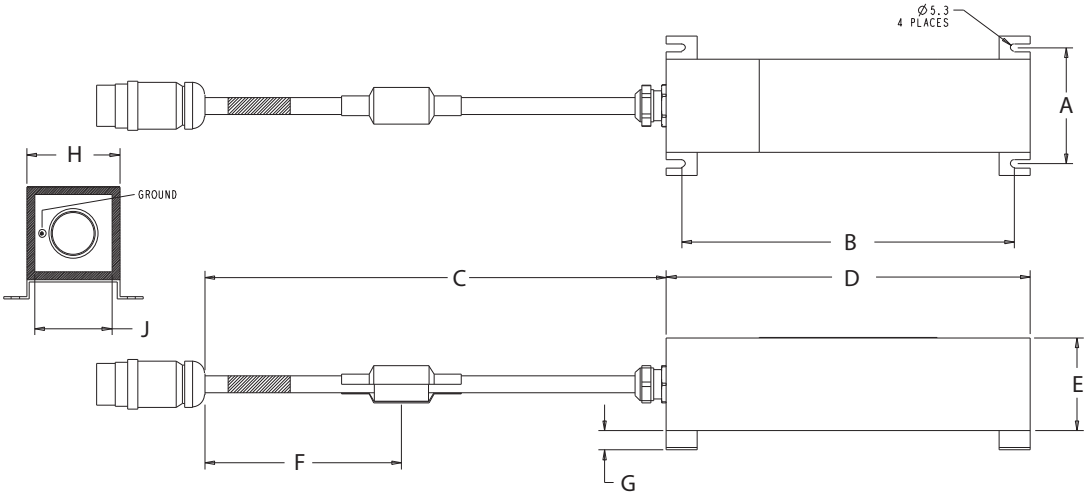

Bulletin 284, Continued

Figure A.10 External Connections for Input Connector

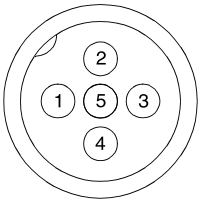

Pin 1: +V Out
Pin 2: Input 1 or 3
Pin 3: Comm
Pin 4: Input 0 or 2
Pin 5: NC (No Connection)

Figure A.11 External Connections for Output Connector

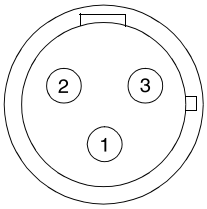

Pin 1: PE
Pin 2: Return
Pin 3: Relay Out

Figure A.12 External Connections for DeviceNet™ Connector

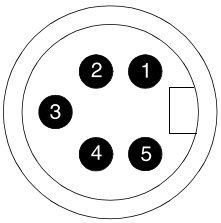

Pin 1: Drain (Not Connected)
Pin 2: + VDNET
Pin 3: -VDNET
Pin 4: CAN_H
Pin 5: CAN_L

Figure A.13 External Connections for Motor Connector

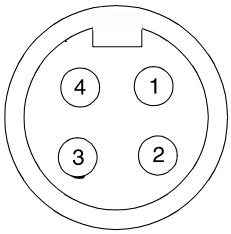

Pin 1: T1 - Black
Pin 2: T2 - White
Pin 3: T3 - Red
Pin 4: Ground - Green

Figure A.14 External Connections for Control/Source Brake Connector

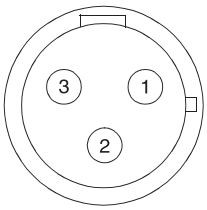

Pin 1: L1 - Black
Pin 2: GND - Green/Yellow
Pin 3: L2 - White

Bulletin 284, Continued

Figure A.15 External Connections for Dynamic Brake Connector

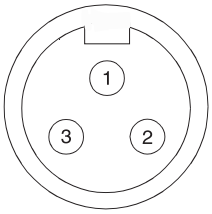

Pin 1: GND - Green/Yellow
Pin 2: BR+ - Black
Pin 3: BR- - White

Figure A.16 External Connections for 0…10V Analog Input

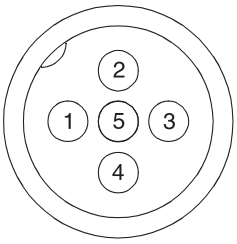

Pin 1: 10V DC
Pin 2: 0…10V Input
Pin 3: Analog Common
Pin 4: Analog Output
Pin 5: RS485 Shield

Figure A.17 Safety Monitor Input (SM1/SM2)

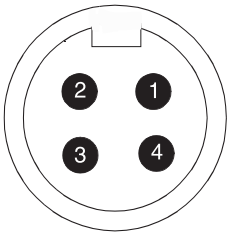

Pin 1: SM2- White
Pin 2: SM1 - Brown
Pin 3: N/C- No connection
Pin 4: N/C- No connection

Figure A.18 External Connections for Safety Input Power (A1/A2)

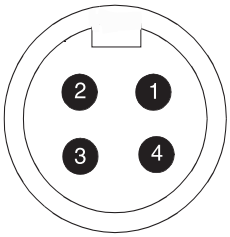

Pin 1: M - White
Pin 2: A1 - Brown
Pin 3: P - Black
Pin 4: A2 - Blue

Overload Curves

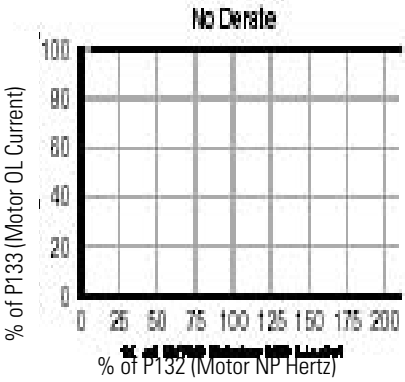

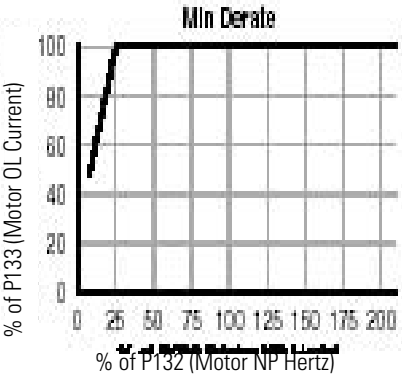

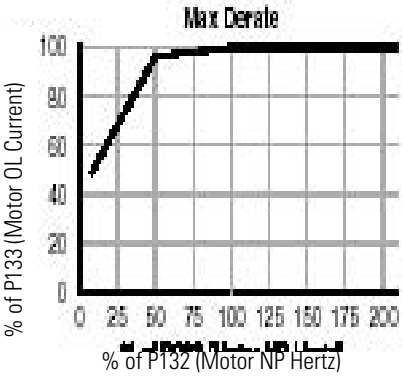

ArmorConnect™ Three-Phase Power Media

Trunk Cables

Specifications

Certifications	
Standards Compliance	UL 2237
Mechanical	
Coupling Nut	Black Anodized Aluminum or 316 Stainless Steel
Housing	Black PVC
Insert	Black PVC
Cable Diameter	0.775 in. +/- 0.12 in. (19.68 mm +/- 0.5 mm)
Electrical	
Contacts	Copper Alloy with Gold over Nickel Plating
Cable	Black PVC, dual rated UL TC/Open Wiring and STOOW
Cable Rating	600V AC/DC
Assembly Rating	600V @ 25 A, Symmetrical Amps RMS Fault: 65 kA when used with Class CC, T, or J type fuses
Environmental	
Enclosure Type Rating	IP67, NEMA 4; IP69K 1200 psi washdown
Operating Temperature	UL Type TC 600V 90 °C Dry 75 °C Wet, Exposed Run (ER) or MTW 600V 90 °C or STOOW 105 °C 600V - CSA STOOW 600V FT2

Dimensions

Dimensions are approximate. Illustrations are not drawn to scale.

Female straight

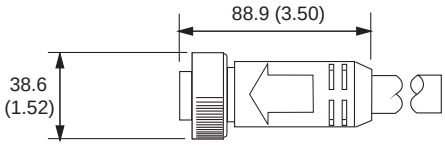

Female 90 deg.

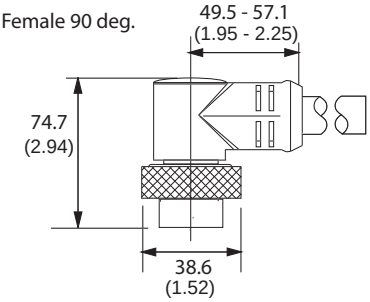

Male straight

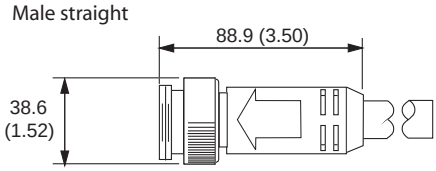

Male 90 deg.

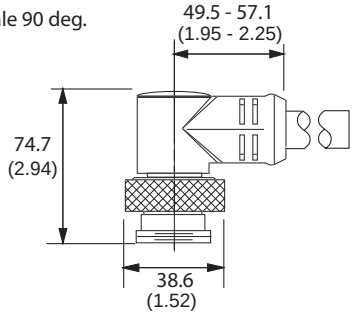

Pinout and Color Code

	Face View Pinout	
	4-pin	
	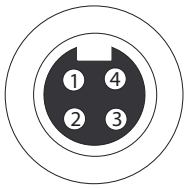 Female	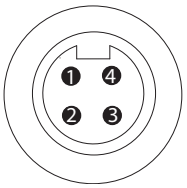 Male
Color Code	1 Black 2 Green/Yellow Extended PIN	3 Red 4 White

Drop Cables

Specifications

Certifications	UL
Standards Compliance	UL 2237
Mechanical	
Coupling Nut	Black Anodized Aluminum or 316 Stainless Steel
Housing	Black PVC
Insert	Black PVC
Cable Diameter	0.43 in. +/- 0.12 in. (10.9 mm +/- 0.5 mm)
Electrical	
Contacts	Brass with Gold over Nickel Plating
Cable	Black PVC, dual rated UL TC/Open Wiring and STOOW
Cable Rating	600V AC/DC
Assembly Rating	600V @ 10 or 15 A, Symmetrical Amps RMS Fault: 65 kA when used with Class CC, T, or J type fuses
Environmental	
Enclosure Type Rating	IP67, NEMA 4; IP69K 1200 psi washdown
Operating Temperature	UL Type TC 600V 90 °C Dry 75 °C Wet, Exposed Run (ER) or MTW 600V 90 °C or STOOW 105 °C 600V - CSA STOOW 600V FT2

Dimensions

Dimensions are approximate. Illustrations are not drawn to scale.

Female straight

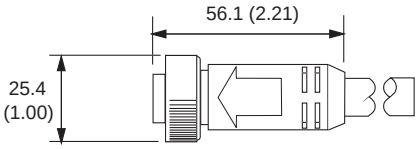

Male straight

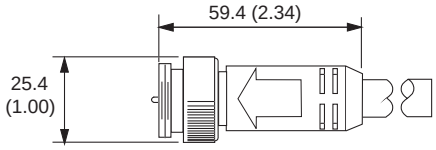

Female 90 deg.

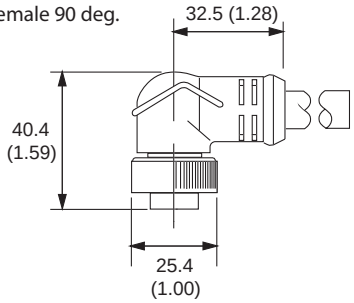

Male 90 deg.

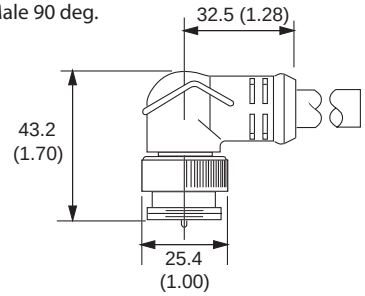

Pinout and Color Code

	Face View Pinout	
	4-pin	
	Female	Male
Color Code	1 Black 2 White	3 Red 4 Green/Yellow Extended PIN

Power Tees & Reducer

Specifications

Certifications	UL
Standards Compliance	UL 2237
Mechanical	
Coupling Nut	Black Anodized Aluminum (Trunk) or 316 Stainless Steel, Black Zinc Diecast (Drop) or 316 Stainless Steel
Housing	Black PVC
Insert	Black PVC
Electrical	
Contacts	Copper Alloy with Gold over Nickel Plating
Voltage	600V AC/DC
Assembly Rating	trunk Tee: 25 A Reducing Tee: Trunk 25 A/ Drop 15 A Reducer: 15 A Symmetrical Amps RMS Fault: 65 kA when used with Class CC, T, or J type fuses
Environmental	
Enclosure Type Rating	IP67, NEMA 4; IP69K 1200 psi washdown

Dimensions

Dimensions are approximate. Illustrations are not drawn to scale.

Reducer

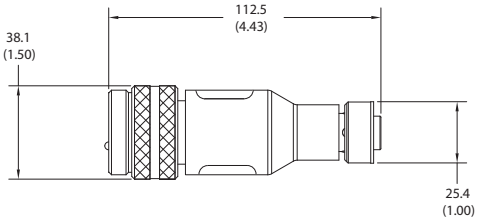

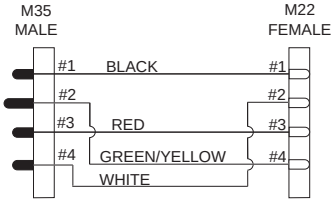

WIRING DIAGRAM

Power Tee

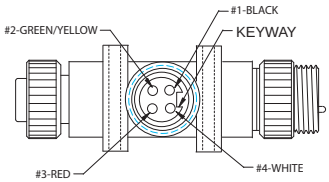

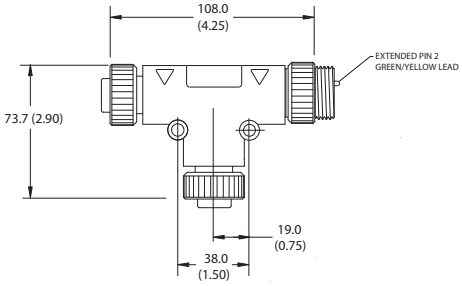

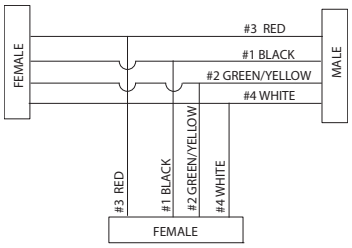

WIRING DIAGRAM

Power Tee - reducing drop

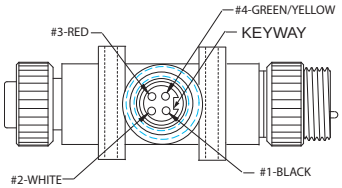

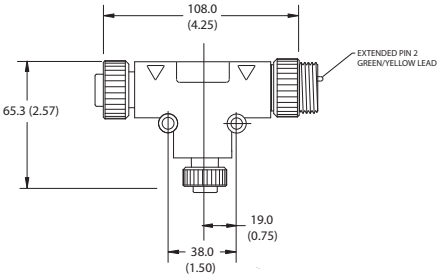

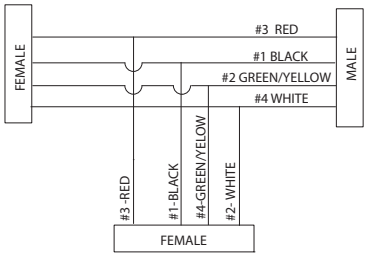

Pinout and Color Code

Assembly Rating	Color Code	Face View Pinout	
		4-pin	
		Quick Change Connector	Mini Connector

Trunk Tee: 25 A	A	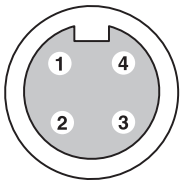 Female	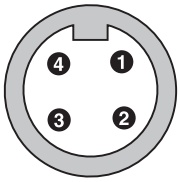 Male	
		1 Black 2 Green/Yellow Extended PIN	3 Red 4 White	
Reducing Tees Trunk: 25 A Drop: 15 A	B	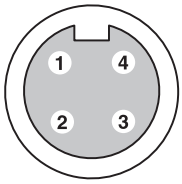 Female	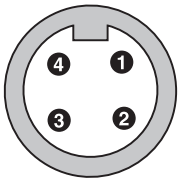 Male	Female
		1 Black 2 Green/Yellow Extended PIN	3 Red 4 White	1 Black 2 Green/Yellow Extended PIN 3 Red 4 White
Reducer Trunk: 25 A Drop: 15 A	C	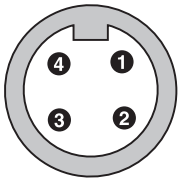 Male		Female
		1 Black 2 Green/Yellow Extended PIN	3 Red 4 White	1 Black 2 Green/Yellow Extended PIN 3 Red 4 White

Power Receptacles

Specifications

Certifications	UL
Standards Compliance	UL 2237
Mechanical	
Insert	Black PVC
Receptacle Shell Material	Black Anodized Aluminum (female) and Zinc DieCast, Black E-Coat (male), or 316 Stainless Steel
Electrical	
Contacts	Copper Alloy with Gold over Nickel Plating (Trunk), Brass with Gold over Nickel Plating (Drop)
Cable Rating	600V AC/DC
Assembly Rating	4 pin - 16 AWG, 600V @ 10 A 4 pin - 14 AWG, 600V @ 15 A 4 pin - 10 AWG, 600V @ 25 A Symmetrical Amps RMS Fault: 65 kA when used with Class CC, T, or J type fuses
Environmental	
Enclosure Type Rating	IP67, NEMA 4; IP69K 1200 psi washdown

Dimensions

Dimensions are approximate. Illustrations are not drawn to scale.

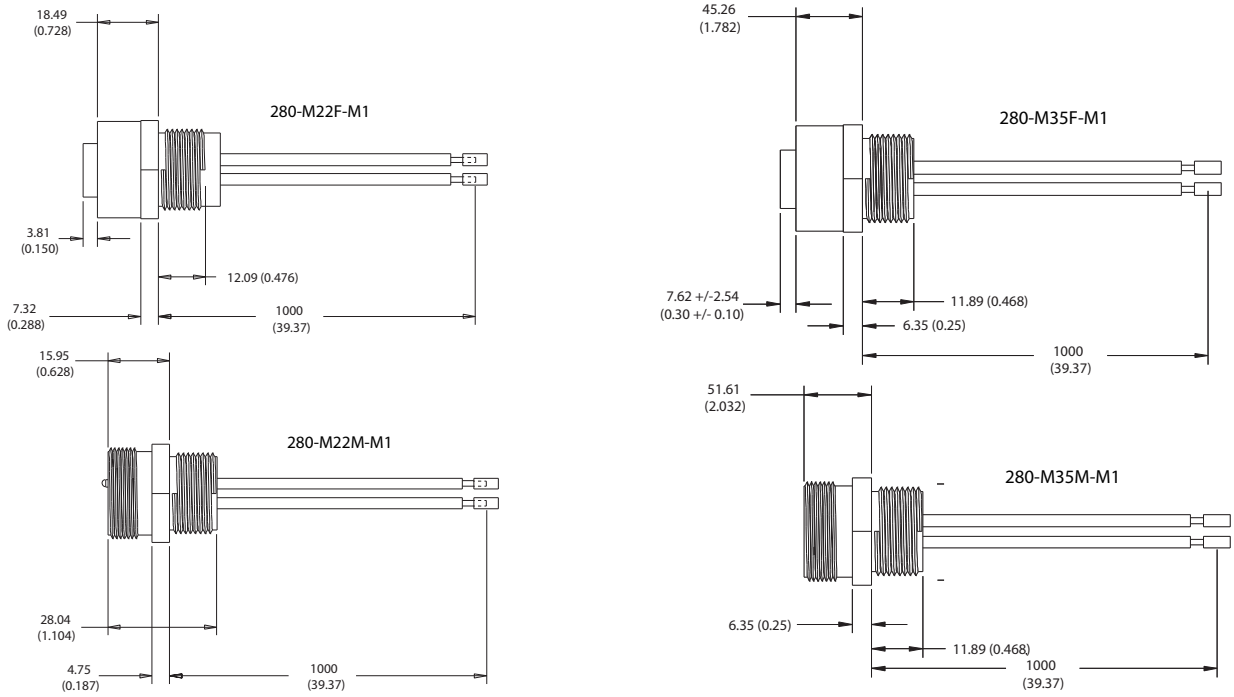

Pinout and Color Code

Assembly Rating	Color Code	Face View Pinout			
		4-pin			
		Quick Change Connector		Mini Connector	Mini Connector
		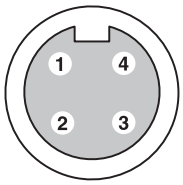 Female	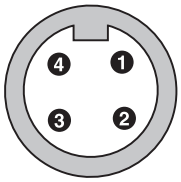 Male	Female	Male
16 AWG 600V, 10 A 14 AWG 600V, 15 A	A			1 Black 2 White	3 Red 4 Green/Yellow Extended PIN
10 AWG 600V, 25 A	B	1 Black 2 Green/Yellow Extended PIN	3 Red 4 White		

Notes:

Bulletin 280/281 CIP Information

Electronic Data Sheets

Electronic Data Sheets (EDS) files are specially formatted ASCII files that provide all of the information necessary for a configuration tool (e.g. RSNetWorx™ for DeviceNet™) to access and alter the parameters of the device. The EDS file contains all of the device information: number of parameters, groupings, parameter name, minimum, maximum, and default values, units, data format and scaling.

EDS files for all the ArmorStart® Distributed Motor Controller units are available from the Internet at **http://www.ab.com/networks/eds.**

They may also be built automatically by some configuration tools since all of the information necessary for a basic EDS file may be extracted from the ArmorStart Distributed Motor Controller.

DOL Type Product Codes and Name Strings

Product codes for DOL starters (and DOL Reversing starters) are based on the Overload relay current rating and the control power rating of the starter. The following table lists the product codes for the Bulletin 280 Distributed Motor Controllers:

Table B.1 Bul. 280 Distributed Motor Controller Product Codes and Name Strings

280D Device Type	Product Code	Contactor Size Code	Overload Current Rating	Control Power Voltage
22	0xA1	100C-12	0.5…2.5 A	24V DC
22	0xA2	100C-12	1.1…5.5 A	24V DC
22	0xA3	100C-23	3.2…16 A	24V DC

DOL Reversing Type Product Codes and Name String

The following table lists the product codes for the Bulletin 281 Distributed Motor Controllers:

Table B.2 Bul. 281 Distributed Motor Controller Product Codes and Name Strings

281D Device Type	Product Code	Contactor Size Code	Overload Current Rating	Control Power Voltage
22	0xE1	100C-12	0.5…2.5 A	24V DC
22	0xE2	100C-12	1.1…5.5 A	24V DC
22	0xE3	100C-23	3.2…16 A	24V DC

DeviceNet Objects

The ArmorStart Distributed Motor Controller supports the following DeviceNet object classes:

Table B.3 DeviceNet Object Classes

Class	Object
0x0001	Identity
0x0002	Message Router
0x0003	DeviceNet
0x0004	Assembly
0x0005	Connection
0x0008	Discrete Input Point
0x0009	Discrete Output Point
0x000F	Parameter Object
0x0010	Parameter Group Object
0x001D	Discrete Input Group
0x001E	Discrete Output Group
0x0029	Control Supervisor
0x002B	Acknowledge Handler
0x002C	Overload Object
0x00B4	DN Interface Object

Identity Object — CLASS CODE 0x0001

The following class attributes are supported for the Identity Object:

Table B.4 Identity Object Class Attributes

Attribute ID	Access Rule	Name	Data Type	Value
1	Get	Revision	UINT	1

Identity Objects

A single instance of the Identity Object is supported. The following instance attributes are supported.

Table B.5 Identity Object Instance Attributes

Attribute ID	Access Rule	Name	Data Type	Value
1	Get	Vendor	UINT	1
2	Get	Device Type	UINT	22 or 133
3	Get	Product Code	UINT	See Table B.1 and Table B.2
4	Get	Revision Major Revision Minor Revision	Structure of: USINT USINT	Indicates Software Firmware Revision Number
5	Get	Status	WORD	Bit 0 — 0=not owned; 1=owned by master Bit 2 — 0=Factory Defaulted; 1=Configured Bit 8 — Minor Recoverable fault Bit 9 — Minor Unrecoverable fault Bit 10 — Major Recoverable fault Bit 11 — Major Unrecoverable fault
6	Get	Serial Number	UDINT	Unique Number for Each Device
7	Get	Product Name String Length ASCII String	Structure of: USINT STRING	Product code specific See Table B.1 and Table B.2
8	Get	State	USINT	Returns the value “3=Operational”
9	Get	Configuration Consistency Value	UINT	Unique value depending on output of the parameter checksum algorithm.
10	Get/Set	Heartbeat Interval	USINT	In seconds. Default = 0

The following common services are implemented for the Identity Object:

Table B.6 Identity Object Common Services

Service Code	Implemented for:		Service Name
	Class	Instance	
0x0E	Yes	Yes	Get_Attribute_Single
0x05	No	Yes	Reset
0x10	No	Yes	Set_Attribute_Single

Message Router — CLASS CODE 0x0002

No class or instance attributes are supported. The message router object exists only to rout explicit messages to other objects.

DeviceNet Object — CLASS CODE 0x0003

The following class attributes are supported for the DeviceNet Object:

Table B.7 DeviceNet Object Class Attributes

Attribute ID	Access Rule	Name	Data Type	Value
1	Get	Revision	UINT	2

A single instance (instance 1) of the DeviceNet Object is supported. The following instance attributes are supported.

Table B.8 DeviceNet Object Instance Attributes

Attribute ID	Access Rule	Name	Data Type	Value
1	Get/Set	Node Address	USINT	0 - 63
2	Get/Set	Baud Rate	USINT	0=125K 1=250K 2=500K
5	Get	Allocation Info Allocation Choice Master Node Addr	Structure of: BYTE USINT	Allocation_byte* 0…63 = address 255 = unallocated
8	Get	MAC ID Switch Value	BOOL	0-63

*Allocation_byte	Bit 0	Explicit messaging
	Bit 1	Polled I/O
	Bit 4	COS I/O
	Bit 5	Cyclic I/O
	Bit 6	Acknowledge Suppression

The following services are implemented for the DeviceNet Object:

Table B.9 DeviceNet Object Common Services

Service Code	Implemented for:		Service Name
	Class	Instance	
0x0E	Yes	Yes	Get_Attribute_Single
0x10	No	Yes	Set_Attribute_Single
0x4B	No	Yes	Allocate_Master/Slave _Connection_Set
0x4C	No	Yes	Release_Master/Slave _Connection_Set

Assembly Object — CLASS CODE 0x0004

The following class attributes are supported for the Assembly Object:

Table B.10 Assembly Object Class Attributes

Attribute ID	Access Rule	Name	Data Type	Value
2	Get	Max Instance	UINT	190

All of the various instances of the assembly object will support attribute 3. The following table summarizes the various instances that are supported:

Table B.11 DeviceNet Assembly Object Instance Attributes

Attribute ID	Type	Description
3	Consumed	Required ODVA Consumed Instance
52	Produced	Required ODVA Produced Instance
120	Produced	Custom Parameter Based Word Wise Assembly
160	Consumed	Default Consumed Instance for DOL and SoftStart units
161	Produced	Default Produced Instance for DOL and SoftStart units
162	Consumed	Standard Consumed Instance for DOL and SoftStart with Network Inputs
163	Produced	Standard Produced Instance for DOL and SoftStart with Network Outputs
181	Produced	User Inputs
182	Consumed	Consumed Network Bits (a.k.a Network Inputs)
183	Produced	Produced Network Bits (a.k.a. Network Outputs)
184	Produced	Trip Status Bits
185	Produced	Starter Status Bits
186	Produced	DeviceNet Status Bits
187	Consumed	Starter Control Bits
189	Produced	Warning Status Bits
190	Produced	1779-ZCIO Bits

Custom Parameter Based "Word-wise" I/O Assemblies

Table B.12 Custom Parameter Based "Word-Wise" (Produced) Assembly Instance 120

Instance 120									
Word	Byte	Bit 7	Bit 6	Bit 5	Bit 4	Bit 3	Bit 2	Bit 1	Bit 0
0	0	Value of the parameter pointed to by "Prod Assy Word 0" Param (low byte)							
	1	Value of the parameter pointed to by "Prod Assy Word 0" Param (high byte)							
1	2	Value of the parameter pointed to by "Prod Assy Word 1" Param (low byte)							
	3	Value of the parameter pointed to by "Prod Assy Word 1" Param (high byte)							
2	4	Value of the parameter pointed to by "Prod Assy Word 2" Param (low byte)							
	5	Value of the parameter pointed to by "Prod Assy Word 2" Param (high byte)							
3	6	Value of the parameter pointed to by "Prod Assy Word 3" Param (low byte)							
	7	Value of the parameter pointed to by "Prod Assy Word 3" Param (high byte)							

“Word-wise” Bit-Packed Assemblies

Assemblies whose instance numbers are 180…189 are all one word (16 bits) long. They can be used “stand alone”, but their main use is to assemble information for EDS file parameters. These “word-wise” assemblies become the building blocks for the custom parameter-based “word-wise” assemblies described above. Note that these “word-wise” assemblies are designed for use with DeviceLogix™, so their contents reflect the various words in the DeviceLogix data table.

Table B.13 Instance 181 — This is a “Read Only” Status Assembly

Instance 181 — Hardware Inputs 1…16								
Byte	**Bit 7**	**Bit 6**	**Bit 5**	**Bit 4**	**Bit 3**	**Bit 2**	**Bit 1**	**Bit 0**
0	—	—	—	—	Input 3	Input 2	Input 1	Input 0
1	Reserved							

Table B.14 Instance 182 — This is a “Read/Write” Control Assembly

Instance 182 — Consumed Network Inputs 1…16								
Byte	**Bit 7**	**Bit 6**	**Bit 5**	**Bit 4**	**Bit 3**	**Bit 2**	**Bit 1**	**Bit 0**
0	Net Input 8	Net Input 7	Net Input 6	Net Input 5	Net Input 4	Net Input 3	Net Input 2	Net Input 1
1	Net Input 16	Net Input 15	Net Input 14	Net Input 13	Net Input 12	Net Input 11	Net Input 10	Net Input 9

Table B.15 Instance 183 This is a “Read Only” Status Assembly

Instance 183 — Produced Network Outputs 1…15								
Byte	**Bit 7**	**Bit 6**	**Bit 5**	**Bit 4**	**Bit 3**	**Bit 2**	**Bit 1**	**Bit 0**
0	Net Out 8	Net Out 7	Net Out 6	Net Out 5	Net Out 4	Net Out 3	Net Out 8	Net Out 1
1	Reserved	Net Out 15	Net Out 14	Net Out 13	Net Out 12	Net Out 11	Net Out 10	Net Out 9

Table B.16 Instance 184 This is a “Read Only” Status Assembly

Instance 184 — Trip Status								
Byte	**Bit 7**	**Bit 6**	**Bit 5**	**Bit 4**	**Bit 3**	**Bit 2**	**Bit 1**	**Bit 0**
0	—	In SS Flt	Control Power	—	—	Phase Loss	OL Trip	Short Circuit
1	—	—	Hw Flt	EEPROM	—	—	DNet Power	Phase Imbal

Table B.17 Instance 185 This is a "Read Only" Status Assembly

Instance 185 — Starter Status								
Byte	**Bit 7**	**Bit 6**	**Bit 5**	**Bit 4**	**Bit 3**	**Bit 2**	**Bit 1**	**Bit 0**
0	At Ref	—	Net Ctl Status	Ready	Running Rev	Running Fwd	Warning	Tripped
1	—	—	140M On	HOA Stat.	Keypad Hand	—	—	—

Table B.18 Instance 186 This is a "Read Only" Status Assembly

Instance 186 — DeviceNet Status								
Byte	**Bit 7**	**Bit 6**	**Bit 5**	**Bit 4**	**Bit 3**	**Bit 2**	**Bit 1**	**Bit 0**
0	—	—	—	I/O Idle	I/O Flt	Exp Flt	I/O Cnxn	Exp Cnxn
1	ZIP FLT	ZIP4 CNX	ZIP3 FLT	ZIP2 CNX	ZIP2 FLT	ZIP2 CNX	ZIP1 FLT	ZIP1 CNX

Table B.19 Instance 187 This is a "Read/Write" Assembly

Instance 187 — Starter Control Bits								
Byte	**Bit 7**	**Bit 6**	**Bit 5**	**Bit 4**	**Bit 3**	**Bit 2**	**Bit 1**	**Bit 0**
0	User Out B	User Out A	—	—	—	Fault Reset	Run Rev	Run Fwd
1	—	—	—	—	—	—	—	—

Table B.20 Instance 189 This is a "Read-Only" Assembly

Instance 189 — Warning Status Bits								
Byte	**Bit 7**	**Bit 6**	**Bit 5**	**Bit 4**	**Bit 3**	**Bit 2**	**Bit 1**	**Bit 0**
0	—	IO Warning	Control Power Warning	—	—	PL Warning	—	—
1	—	—	HW Warn	—	—	—	DN Warn	PI Warn

Standard Distributed Motor Controller I/O Assemblies

Standard Distributed Motor Controller IO Assemblies are available on all Starter Types.

Standard Distributed Motor Controller Output (Consumed) Assemblies

Table B.21 Instance 3 is the required output (consumed) assembly defined in the DeviceNet Motor Starter Profile

Instance 3 — ODVA Starter								
Byte	**Bit 7**	**Bit 6**	**Bit 5**	**Bit 4**	**Bit 3**	**Bit 2**	**Bit 1**	**Bit 0**
0	—	—	—	—	—	—	—	Run Fwd

Table B.22 Instance 160 is the default output (consumed) assembly for Standard Distributed Motor Controllers

Instance 160 — Default Consumed Standard Distributed Motor Controller								
Byte	**Bit 7**	**Bit 6**	**Bit 5**	**Bit 4**	**Bit 3**	**Bit 2**	**Bit 1**	**Bit 0**
0	User Out B	User Out A	—	—	—	Fault Reset	Run Rev	Run Fwd

Table B.23 Instance 162 is the standard output (consumed) assembly with Network Inputs

Instance 162 — Standard Consumed Starter with Network Inputs								
Byte	**Bit 7**	**Bit 6**	**Bit 5**	**Bit 4**	**Bit 3**	**Bit 2**	**Bit 1**	**Bit 0**
0	User Out B	User Out A	—	—	—	Fault Reset	Run Rev	Run Fwd
1	Net In 8	Net In 7	Net In 6	Net In 5	Net In 4	Net In 3	Net In 2	Net In 1
2	Net In 16	Net In 15	Net In 14	Net In 13	Net In 12	Net In 11	Net In 10	Net In 9

Standard Distributed Motor Controller Input (Produced) Assemblies

Table B.24 Instance 52 is the required input (produced) assembly defined in the DeviceNet Motor Starter Profile

Instance 52 — ODVA Starter								
Byte	**Bit 7**	**Bit 6**	**Bit 5**	**Bit 4**	**Bit 3**	**Bit 2**	**Bit 1**	**Bit 0**
—	—	—	—	—	—	Running	—	Fault

Table B.25 Instance 161 is the default input (produced) assembly for Standard Distributed Motor Controllers

Instance 161 — Default Producted Standard Distributed Motor Controller								
Byte	**Bit 7**	**Bit 6**	**Bit 5**	**Bit 4**	**Bit 3**	**Bit 2**	**Bit 1**	**Bit 0**
0	—	—	—	Ready	Running Rev	Running Fwd	Warning	Tripped
1	—	—	140M On	HOA Stat.	User In 3	User In 2	User In 1	User In 0

Table B.26 Instance 163 is the standard input (produced) assembly with Network Outputs and ZIP CCV

Instance 163 — Standard Produced Starter with Network Outputs								
Byte	**Bit 7**	**Bit 6**	**Bit 5**	**Bit 4**	**Bit 3**	**Bit 2**	**Bit 1**	**Bit 0**
0	—	—	—	Ready	Running Rev	Running Fwd	Warning	Tripped
1	—	—	140M On	HOA Stat.	User In 4	User In 3	User In 2	User In 1
2	Net Out 8	Net Out 7	Net Out 6	Net Out 5	Net Out 4	Net Out 3	Net Out 2	Net Out 1
3	Logic Enabled	Net Out 15	Net Out 14	Net Out 13	Net Out 12	Net Out 11	Net Out 10	Net Out 9
4	ZIP CCV (Low)							
5	ZIP CCV (High)							

Table B.27 Instance 190 is the 1999-ZCIO Native Format Produced Assembly

Instance 190 — 1799-ZCIO Native Format Produced Assembly								
Byte	**Bit 7**	**Bit 6**	**Bit 5**	**Bit 4**	**Bit 3**	**Bit 2**	**Bit 1**	**Bit 0**
0	Running Rev	Running Fwd	Warning	Tripped	Input 3	Input 2	Input 1	Input 0
1	Reserved	Logic Enabled	Reserved				140M On	HOA
2	Reserved				User Out B	User Out A	Run Rev	Run Fwd
3	Reserved							
4	Net Out 8	Net Out 7	Net Out 6	Net Out 5	Net Out 4	Net Out 3	Net Out 2	Net Out 1
5	ZIP CCV (Low)							
6	ZIP CCV (High)							

Connection Object — CLASS CODE 0x0005

No class attributes are supported for the Connection Object

Multiple instances of the Connection Object are supported, instances 1, 2, and 4 from the group 2 predefined master/slave connection set, instances 5 and 6 are available through explicit UCMM connections.

Instance 1 is the Predefined Group 2 Connection Set Explicit Message Connection. The following instance 1 attributes is supported:

Table B.28 Connection Object Instance 1 Attributes

Attribute ID	Access Rule	Name	Data Type	Value
1	Get	State	USINT	0=nonexistant 1=configuring 3=established 4=timed out
2	Get	Instance Type	USINT	0=Explicit Message
3	Get	Transport Class Trigger	USINT	0x83 — Server, Transport Class 3
4	Get	Produced Connection ID	UINT	10xxxxxx011 xxxxxx = node address
5	Get	Consumed Connection ID	UINT	10xxxxxx100 xxxxxx = node address
6	Get	Initial Comm Characteristics	USINT	0x22
7	Get	Produced Connection Size	UINT	0x61
8	Get	Consumed Connection Size	UINT	0x61
9	Get/Set	Expected Packet Rate	UINT	in ms
12	Get	Watchdog Action	USINT	01 = auto delete 03 = deferred delete
13	Get	Produced Connection Path Length	UINT	0
14	Get	Produced Connection Path		Empty
15	Get	Consumed Connection Path Length	UINT	0
16	Get	Consumed Connection Path		Empty

Instance 2 is the Predefined Group 2 Connection Set Polled I/O Message Connection. The following instance 2 attributes are supported:

Table B.29 Connection Object Instance 2 Attributes

Attribute ID	Access Rule	Name	Data Type	Value
1	Get	State	USINT	0=nonexistant 1=configuring 3=established 4=timed out
2	Get	Instance Type	USINT	1= I/O Connection
3	Get	Transport Class Trigger	USINT	0x82 — Server, Transport Class 2 (If alloc_choice != polled and ack suppression is enabled then value = 0x80)
4	Get	Produced Connection ID	UINT	01111xxxxxx xxxxxx=node address
5	Get	Consumed Connection ID	UINT	10xxxxxx101 xxxxxx=node address
6	Get	Initial Comm Characteristics	USINT	0x21
7	Get	Produced Connection Size	UINT	0 to 8
8	Get	Consumed Connection Size	UINT	0 to 8
9	Get/Set	Expected Packet Rate	UINT	in ms
12	Get/Set	Watchdog Action	USINT	0=transition to timed out 1=auto delete 2=auto reset
13	Get	Produced Connection Path Length	UINT	8
14	Get/Set	Produced Connection Path		21 04 00 25 (assy inst) 00 30 03
15	Get	Consumed Connection Path Length	UINT	8
16	Get/Set	Consumed Connection Path		21 04 00 25 (assy inst) 00 30 03

Instance 4 is the Predefined Group 2 Connection Set Change of State/ Cyclic I/O Message Connection. The following instance 4 attributes are supported:

Table B.30 Connection Object Instance 4 Attributes

Attribute ID	Access Rule	Name	Data Type	Value
1	Get	State	USINT	0=nonexistant 1=configuring 3=established 4=timed out
2	Get	Instance Type	USINT	1=I/O Connection
3	Get	Transport Class Trigger	USINT	0x00 (Cyclic, unacknowledged) 0x03 (Cyclic, acknowledged) 0x10 (COS, unacknowledged) 0x13 (COS, acknowledged)
4	Get	Produced Connection ID	UINT	01101xxxxxx xxxxxx=node address
5	Get	Consumed Connection ID	UINT	10xxxxxx101 xxxxxx=node address
6	Get	Initial Comm Characteristics	USINT	0x02 (acknowledged) 0x0F (unacknowledged)
7	Get	Produced Connection Size	UINT	0 to 8
8	Get	Consumed Connection Size	UINT	0 to 8
9	Get/Set	Expected Packet Rate	UINT	in ms
12	Get	Watchdog Action	USINT	0=transition to timed out 1=auto delete 2=auto reset
13	Get	Produced Connection Path Length	UINT	8
14	Get	Produced Connection Path		21 04 00 25 (assy inst) 00 30 03
15	Get	Consumed Connection Path Length	UINT	8
16	Get/Set	Consumed Connection Path		21 04 00 25 (assy inst) 00 30 03

Instances 5 and 6 are available group 3 explicit message connections that are allocated through the UCMM. The following attributes are supported:

Table B.31 Connection Object Instance 5 and 6 Attributes

Attribute ID	Access Rule	Name	Data Type	Value
1	Get	State	USINT	0=nonexistant 1=configuring 3=established 4=timed out
2	Get	Instance Type	USINT	0=Explicit Message
3	Get	Transport Class Trigger	USINT	0x83 — Server, Transport Class 3
4	Get	Produced Connection ID	UINT	Depends on message group and Message ID
5	Get	Consumed Connection ID	UINT	Depends on message group and Message ID
6	Get	Initial Comm Characteristics	USINT	0x33 (Group 3)
7	Get	Produced Connection Size	UINT	0
8	Get	Consumed Connection Size	UINT	0XFFFF
9	Get/Set	Expected Packet Rate	UINT	in ms
12	Get	Watchdog Action	USINT	01 = auto delete 03 = deferred delete
13	Get	Produced Connection Path Length	UINT	0
14	Get	Produced Connection Path		Empty
15	Get	Consumed Connection Path Length	UINT	0
16	Get	Consumed Connection Path		Empty

Instances 8-11 are ZIP Consumers. The following instance attributes will be supported:

Table B.32 Connection Object Instances 8-11 Attributes

Attribute ID	Access Rule	Name	Data Type	Value
1	Get	State	USINT	0=nonexistant 1=configuring 3=established
2	Get	Instance Type	USINT	1=I/O Connection
3	Get	Transport Class Trigger	USINT	0x20 (COS, unacknowledged)
4	Get	Produced Connection ID	UINT	FFFF (not producing data)
5	Get	Consumed Connection ID	UINT	01101xxxxxx xxxxxx=node address
6	Get	Initial Comm Characteristics	USINT	0xF0 (unacknowledged)
7	Get	Produced Connection Size	UINT	0
8	Get	Consumed Connection Size	UINT	8
9	Get/Set	Expected Packet Rate	UINT	in milliseconds
12	Get	Watchdog Action	USINT	2=auto reset
13	Get	Produced Connection Path Length	UINT	0
14	Get	Produced Connection Path		0
15	Get	Consumed Connection Path Length	UINT	8
16	Get	Consumed Connection Path		21 0E 03 25 01 00 30 02

The following services are implemented for the Connection Object:

Table B.33 Connection Objects Common Services

Service Code	Implemented for:		Service Name
	Class	Instance	
0x05	No	Yes	Reset
0x0E	No	Yes	Get_Attribute_Single
0x10	No	Yes	Set_Attribute_Single

Discrete Input Point Object — CLASS CODE 0x0008

The following class attributes are supported for the Discrete Input Point Object:

Table B.34 Discrete Input Point Object Class Attributes

Attribute ID	Access Rule	Name	Data Type	Value
1	Get	Revision	UINT	2
2	Get	Max Instance	UINT	4

Four instances of the Discrete Input Point Object are supported. All instances contain the following attributes:

Table B.35 Discrete Input Point Object Instance Attributes

Attribute ID	Access Rule	Name	Data Type	Value
3	Get	Value	BOOL	0=OFF, 1=ON
115	Get/Set	Force Enable	BOOL	0=Disable, 1=Enabl;e
116	Get/Set	Force Value	BOOL	0=OFF, 1=ON

The following common services are implemented for the Discrete Input Point Object:

Table B.36 Discrete Input Point Object Instance Common Services

Service Code	Implemented for:		Service Name
	Class	Instance	
0x0E	Yes	Yes	Get_Attribute_Single
0x10	No	Yes	Set_Attribute_Single

Discrete Output Point Object — CLASS CODE 0x0009 ❶

The following class attributes are supported for the Discrete Output Point Object:

Table B.37 Discrete Output Point Object Class Attributes

Attribute ID	Access Rule	Name	Data Type	Value
1	Get	Revision	UINT	1
2	Get	Max Instance	UINT	4

Four instances of the Discrete Output Point Object are supported. The following table summarizes the DOP instances:

Table B.38 Discrete Output Point Object Instance Attributes

Instance ID	Name	Alternate Mapping	Description
1	Run Fwd Output	0029 – 01 – 03	Run Forward output. For all starter types, this output is hard wired from the ArmorStart CPU to the actuator
2	Run Rev Output	0029 – 01 – 04	Run Reverse output. For all starter types, this output is hard wired from the ArmorStart CPU to the actuator
3	User Output A	none	These are the 2 ArmorStart user outputs.
4	User Output B	none	

All instances contain the following attributes.

Attribute ID	Access Rule	Name	Data Type	Value
3	Get	Value	BOOL	0=OFF, 1=ON
5	Get/Set	Fault Action	BOOL	0=Fault Value attribute, 1=Hold Last State
6	Get/Set	Fault Value	BOOL	0=OFF, 1=ON
7	Get/Set	Idle Action	BOOL	0=Fault Value attribute, 1=Hold Last State
8	Get/Set	Idle Value	BOOL	0=OFF, 1=ON
113	Get/Set ✍	Pr Fault Action	BOOL	0=Pr Fault Value attribute, 1=Ignore
114	Get/Set ✍	Pr Fault Value	BOOL	0=OFF, 1=ON
115	Get/Set	Force Enable	BOOL	0=Disable, 1=Enable
116	Get/Set	Force Value	BOOL	0=OFF, 1=ON

❶ For DOP instances 1 and 2, attributes 113 and 114 have “Get” only access, and their values are always 0.

The following common services are implemented for the Discrete Output Point Object:

Table B.39 Discrete Output Object Common Services

Service Code	Implemented for:		Service Name
	Class	Instance	
0x0E	Yes	Yes	Get_Attribute_Single
0x10	No	Yes	Set_Attribute_Single

Discrete Output Point Object Special Requirements

DOP Instances 3 and 4 Special Behavior

There are many sources that can affect an output point's value: an I/O message, an explicit message, local logic, network fault and idle conditions, and protection fault conditions. An output point must know how to select which source of data to use to drive its value attribute.

An output that is not used in a DeviceLogix program behaves much the same as in the DeviceNet Specification. One notable addition to DOP behavior for the ArmorStart implementation is that Protection Fault Action and Protection Fault Value attributes determine the behavior of the DOP when the ArmorStart faults on a protection fault.

The following State Transition Diagram is used for **DOP Instances 3 and 4** when they are not in use in a DeviceLogix Program.

Figure B.1 State Transition Diagram — Unbound DOP Instances 3 and 4

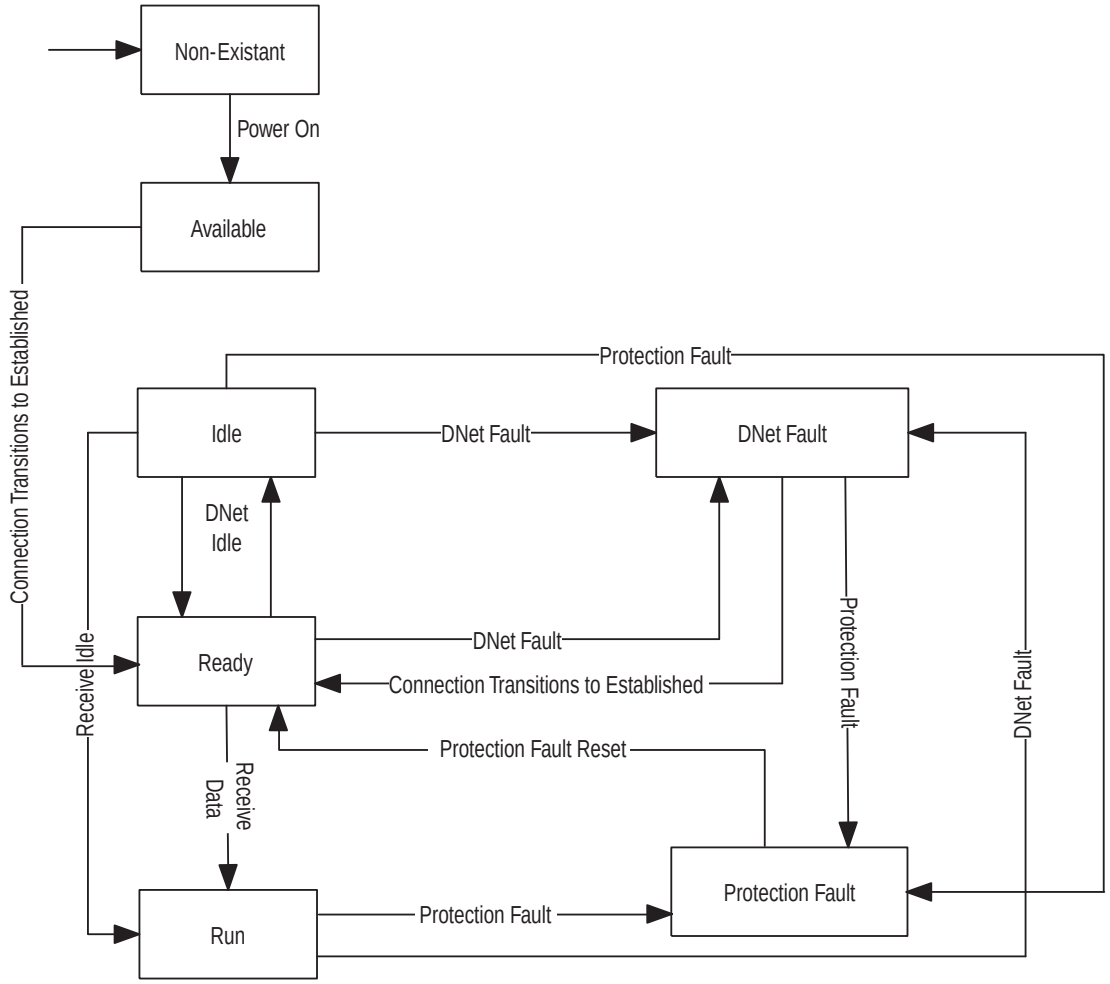

DOP Instances 1 and 2 Special Behavior

Besides the sources that can affect output points 3 and 4, DOPs 1 and 2 can be affected by keypad inputs since they double as the Run Forward and Run Reverse outputs. This adds complexity to their behavior, so their behavior is defined in this section separately.

The following State Transition Diagram is used for **DOP Instances 1 and 2**

Figure B.2 DOP Instances 1 and 2

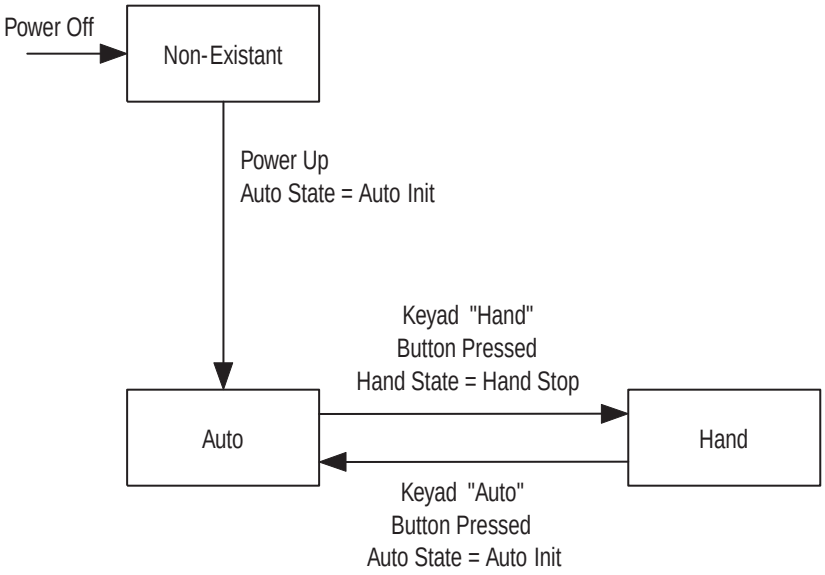

The following State Transition Diagram is used in **Auto State for Unbound DOP Instances 1 and 2**

Figure B.3 Auto State for Unbound DOP Instances 1 and 2

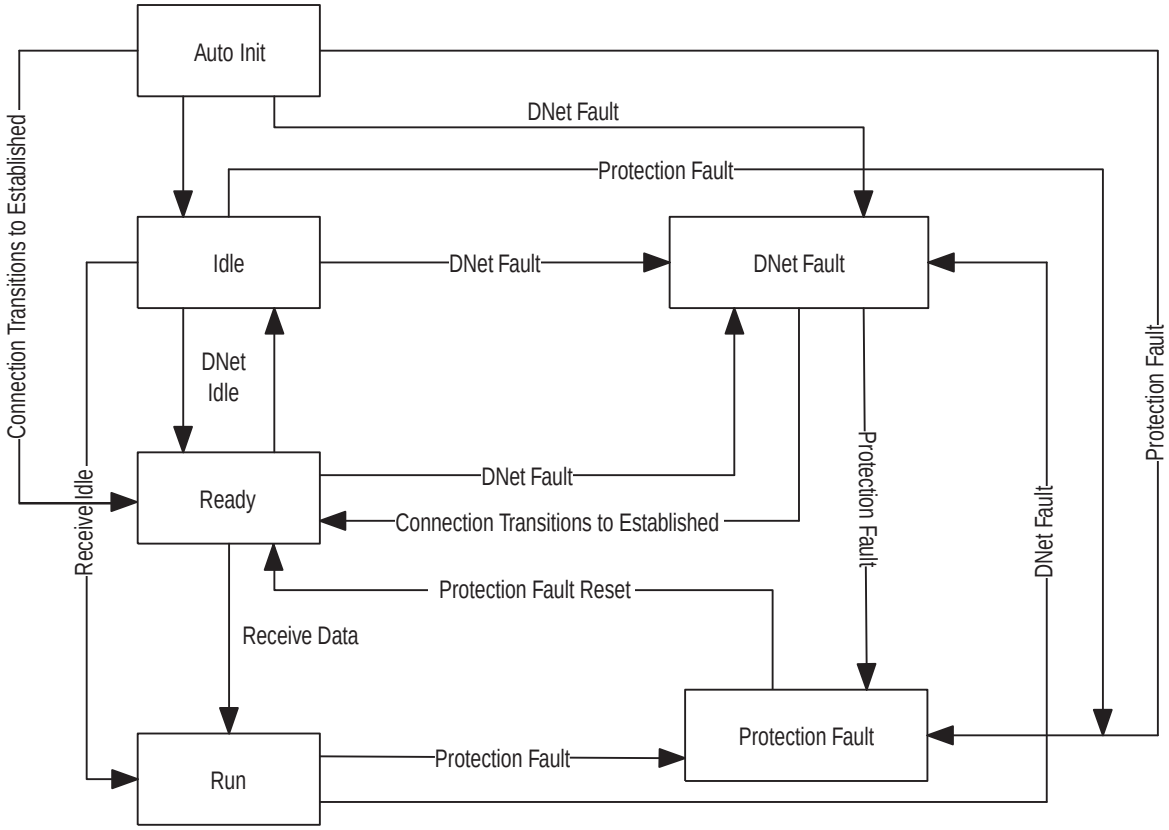

The following State Transition Diagram is used in **Hand State for DOPs 1 and 2** with parameter 45 Keypad Mode set to 1 = momentary.

Figure B.4 Hand State for DOPs 1 and 2 (Momentary)

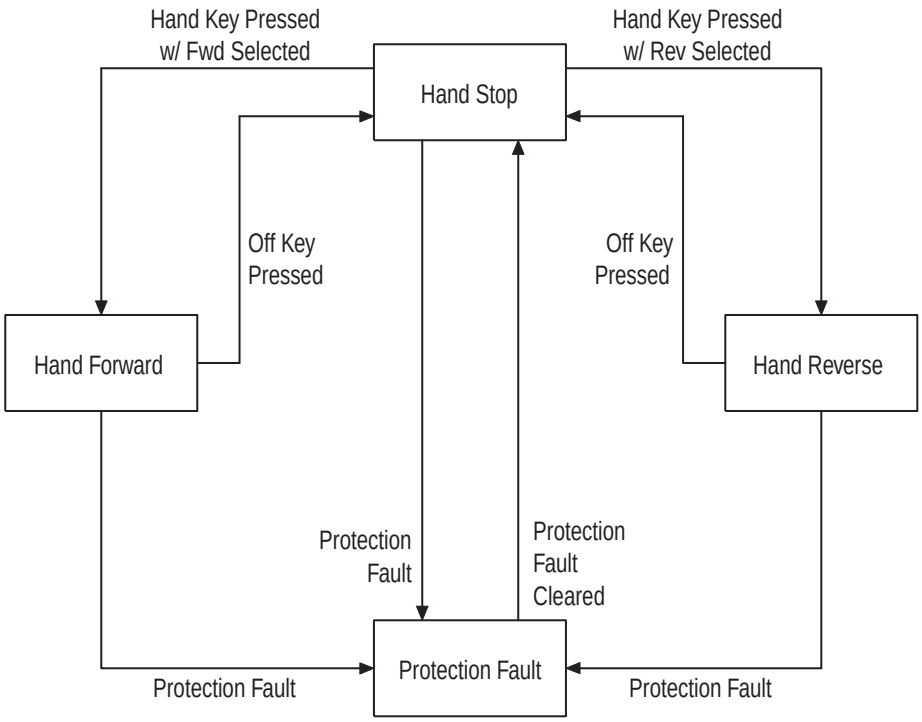

The following State Transition Diagram is used in **Hand State for DOPs 1 and 2** with parameter 45 Keypad Mode set to 1 = maintained.

Figure B.5 Hand State for DOPs 1 and 2 (Maintained)

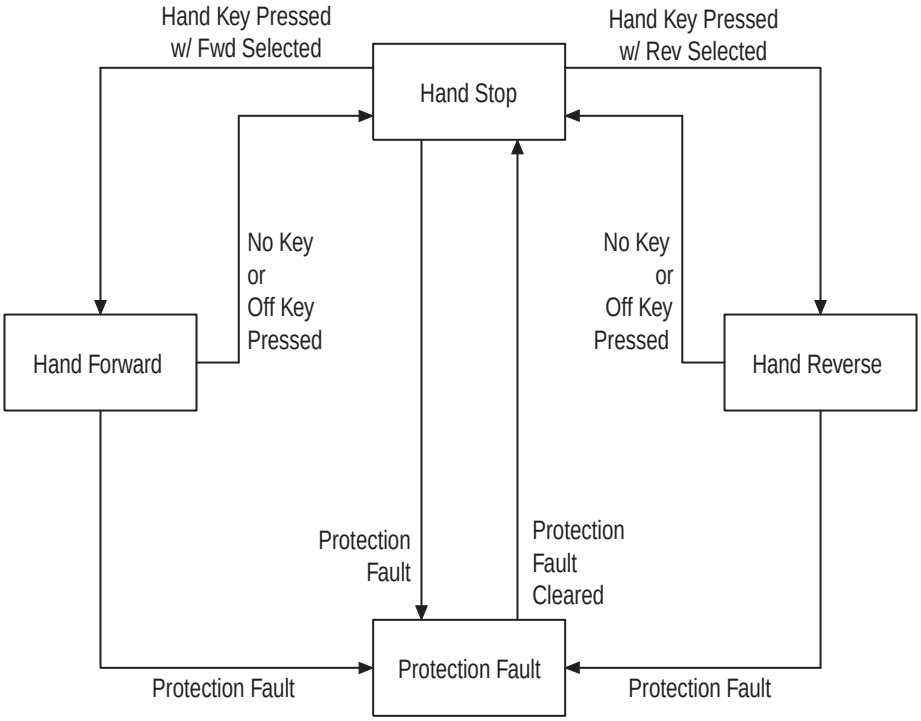

Parameter Object — CLASS CODE 0x000F

The following class attributes are supported for the Parameter Object:

Table B.40 Parameter Object Class Attributes

Attribute ID	Access Rule	Name	Data Type
1	Get	Revision	UINT
2	Get	Max Instance	UINT
8	Get	Parameter Class Descriptor	WORD
9	Get	Configuration Assembly Instance	UINT

The number of instances of the parameter object will depend upon the type of Distributed Motor Controller. There is a standard set of instances reserved (1-99) for all starters. These instances are followed by a unique set of instances for each starter type (Across the Line, Soft start, or Inverter type).

The following instance attributes are implemented for all parameter attributes:

Table B.41 Parameter Object Instance Attributes

Attribute ID	Access Rule	Name	Data Type
1	Get/Set	Value	Specified in Descriptor
2	Get	Link Path Size	USINT
3	Get	Link Path	Array of: BYTE EPATH
4	Get	Descriptor	WORD
5	Get	Data Type	EPATH
6	Get	Data Size	USINT
7	Get	Parameter Name String	SHORT_STRING
8	Get	Units String	SHORT_STRING
9	Get	Help String	SHORT_STRING
10	Get	Minimum Value	Specified in Descriptor
11	Get	Maximum Value	Specified in Descriptor
12	Get	Default Value	Specified in Descriptor
13	Get	Scaling Multiplier	UINT
14	Get	Scaling Divisor	UINT
15	Get	Scaling Base	UINT
16	Get	Scaling Offset	INT
17	Get	Multiplier Link	UINT
18	Get	Divisor Link	UINT
19	Get	Base Link	UINT
20	Get	Offset Link	UINT
21	Get	Decimal Precision	USINT

The following common services are implemented for the Parameter Object:

Table B.42 Parameter Object Common Services

Service Code	Implemented for:		Service Name
	Class	Instance	
0x0E	Yes	Yes	Get_Attribute_Single
0x10	No	Yes	Set_Attribute_Single
0x01	No	Yes	Get_Attributes_All

Parameter Group Object — CLASS CODE 0x0010

The following class attributes are supported for the Parameter Object:

Table B.43 Parameter Group Object Class Attributes

Attribute ID	Access Rule	Name	Data Type
1	Get	Revision	UINT
2	Get	Max Instance	UINT

All Bulletin 280/281 Motor Starters have the following instances of the parameter group object:

- Instance 1 = DeviceLogix Parameters
- Instance 2 = DeviceNet Parameters
- Instance 3 = Starter Protection Parameters
- Instance 4 = User I/O Parameters
- Instance 5 = Miscellaneous Setup Parameters
- Instance 6 = ZIP Parameters
- Instance 7 = Starter Display
- Instance 8 = Starter Setup

The following instance attributes are supported for all parameter group instances:

Table B.44 Parameter Group Object Instance Attributes

Attribute ID	Access Rule	Name	Data Type
1	Get	Group Name String	SHORT_STRING
2	Get	Number of Members	UINT
3	Get	1st Parameter	UINT
4	Get	2nd Parameter	UINT
n	Get	Nth Parameter	UINT

The following common services are implemented for the Parameter Group Object:

Table B.45 Parameter Group Object Service Common Services

Discrete Input Group Object — CLASS CODE 0x001D

Service Code	Implemented for:		Service Name
	Class	Instance	
0x0E	Yes	Yes	Get_Attribute_Single

Discrete Input Group Object — Class CODE 0x001D

No class attributes are supported for the Discrete Input Group Object.

A single instance of the Discrete Input Group Object is supported. It contains the following attributes:

Table B.46 Discrete Input Instance Attributes

Attribute ID	Access Rule	Name	Data Type	Value
3	Get	Number of Instances	USINT	4
4	Get	Binding	Array of UINT	List of DIP instances
6	Get/Set	Off_On_Delay	UINT	in µsec
7	Get/Set	On_Off_Delay	UINT	in µsec

The following common services are implemented for the Discrete Input Group Object:

Table B.47 Discrete Input Group Object Common Services

Service Code	Implemented for:		Service Name
	Class	Instance	
0x0E	No	Yes	Get_Attribute_Single
0x10	No	Yes	Set_Attribute_Single

Discrete Output Group Object — CLASS CODE 0x001E

No class attributes are supported for the Discrete Output Group Object.

A single instance of the Discrete Output Group Object is supported. It contains the following attributes:

Table B.48 Discrete Output Instance Attributes

Attribute ID	Access Rule	Name	Data Type	Value
3	Get	Number of Instances	USINT	4 for DOL
4	Get	Binding	Array of UINT	List of DOP instances; 1, 2, 3, 4
6	Get/Set	Command	BOOL	0=idle; 1=run
104	Get/Set	Network Status Override	BOOL	0=No Override (go to safe state) 1=Override (run local logic)
105	Get/Set	Comm Status Override	BOOL	0=No override (go to safe state) 1=Override (run local logic)

The following common services are implemented for the Discrete Output Group Object:

Table B.49 Discrete Output Group Common Services

Service Code	Implemented for:		Service Name
	Class	Instance	
0x0E	No	Yes	Get_Attribute_Single
0x10	No	Yes	Set_Attribute_Single

Control Supervisor Object -CLASS CODE 0x0029

No class attributes are supported.

The following instance attributes are supported:

A single instance (instance 1) of the Control Supervisor Object will be supported.

Table B.50 Control Supervisor Instance Attributes

Attribute ID	Access Rule	Name	Data Type	Value
3	Get/Set	Run 1	BOOL	These Run outputs also map to DOP instances 1 and 2.
*4	Get/Set	Run 2	BOOL	
7	Get	Running 1	BOOL	Status of RUN FWD contact
*8	Get	Running 2	BOOL	Status of RUN REV contact
9	Get	Ready	BOOL	Device not faulted
10	Get	Tripped	BOOL	Device faulted
12	Get/Set	Fault Reset	BOOL	0->1 = Trip Reset
100	Get/Set	Keypad Mode	BOOL	0=Maintained; 1=Momentary
101	Get/Set	Keypad Disable	BOOL	0=Not Disabled; 1=Disabled
115	Get	Warning Status	WORD	Bits 0-4 = reserved Bit 5 = CP Warning Bit 6 = IO Warning Bit 7 = reserved Bit 8 = reserved Bit 9 = DN Warning Bits 10-12 = reserved Bit 13 = HW Warning Bits 14-15 = reserved
124	Get/Set	Trip Enable	WORD	Bit enumerated trip enable word
130	Get/Set	Trip Reset Mode	BOOL	0=manual; 1=auto
131	Get/Set	Trip Reset Level	USINT	0 – 100%; default = 75
151	Get	Base Enclosure	WORD	Bit 0 = IP67 Bit 1 = NEMA 4x Bits 2-15 reserved
152	Get	Base Options	WORD	Bit 0 = Output Fuse Bit 1 = Safety Monitor Bit 2 = CP Fuse Detect Bits 3-7 = Reserved Bit 8 = 10A Base Bit 9 = 25A Base Bit 10-15 = Reserved
153	Get	Wiring Options	WORD	Bit 0 = Conduit Bit 1 = Round Media Bits 2-15 = Reserved
154	Get	Starter Enclosure	WORD	Bit 0 = IP67 Bit 1 = NEMA 4x Bits 2-15 reserved
155	Get	Starter Options	WORD	Bit 0 = Full Keypad Bit 1 = Safety Monitor Bits 2-15 reserved
156	Get	Last Pr Trip	UINT	See Parameter 61

The following common services are implemented for the Control Supervisor Object:

Table B.51 Control Supervisor Object Common Services

Service Code	Implemented for:		Service Name
	Class	Instance	
0x0E	No	Yes	Get_Attribute_Single
0x10	No	Yes	Set_Attribute_Single

Acknowledge Handler Object — CLASS CODE 0x002b

No class attributes are supported for the Acknowledge Handler Object.

A single instance (instance 1) of the Acknowledge Handler Object is supported. The following instance attributes are supported:

Table B.52 Acknowledge Handler Instance Attributes

Attribute ID	Access Rule	Name	Data Type	Value
1	Get/Set	Acknowledge Timer	UINT	milliseconds
2	Get	Retry Limit	USINT	1
3	Get	COS Producing Connection Instance	UINT	4

The following common services are implemented for the Acknowledge Handler Object:

Table B.53 Acknowledge Handler Common Services

Service Code	Implemented for:		Service Name
	Class	Instance	
0x0E	No	Yes	Get_Attribute_Single
0x10	No	Yes	Set_Attribute_Single

Overload Object — CLASS CODE 0x002c

No class attributes are supported for the Overload Object.

A single instance (instance 1) of the Overload Object is supported for Bulletin 280/281:

Table B.54 Overload Object Instance Attributes

Attribute ID	Access Rule	Name	Data Type	Value
3	Get/Set	FLA Setting	BOOL	xxx.x Amps
4	Get/Set	Trip Class	USINT	1=10 2=15 3=20
5	Get	Average Current	UINT	xxx.x Amps
7	Get	% Thermal Utilized	USINT	xxx% FLA
8	Get	Current L1	UINT	xxx.x Amps
9	Get	Current L2	UINT	xxx.x Amps
10	Get	Current L3	UINT	xxx.x Amps
190	Get/Set	FLA Setting Times 10	BOOL	xxx.x Amps
192	Get	Avg. Current Times 10	UINT	xxx.x Amps
193	Get	Current L1 Times 10	UINT	xxx.x Amps
194	Get	Current L2 Times 10	UINT	
195	Get	Current L3 Times 10	UINT	

The following common services are implemented for the Overload Object:

Table B.55 Acknowledge Handler Object Common Services

Service Code	Implemented for:		Service Name
	Class	Instance	
0x0E	No	Yes	Get_Attribute_Single
0x10	No	Yes	Set_Attribute_Single

DeviceNet Interface Object -CLASS CODE 0x00B4

This “vendor specific” object has no class attributes.

A single instance (instance 1) of the DeviceNet Interface Object is supported:

Table B.56 DeviceNet Interface Object Instance Attribute

Attribute ID	Access Rule	Name	Data Type	Min/Max	Default	Description
7	Get/Set	Prod Assy Word 0	USINT	0…108	1	Defines Word 0 of Assy 120
8	Get/Set	Prod Assy Word 1	USINT	0…108	5	Defines Word 1 of Assy 120
9	Get/Set	Prod Assy Word 2	USINT	0…108	6	Defines Word 2 of Assy 120
10	Get/Set	Prod Assy Word 3	USINT	0…108	7	Defines Word 3 of Assy 120
13	Get/Set	Starter COS Mask	WORD	0…0xFFFF	0xFFFF	Change of state mask for starter bits
15	Get/Set	Autobaud Enable	BOOL	0…1	1	1= enabled; 0 = disabled
16	Get/Set	Consumed Assy	USINT	0…185	160	3, 121, 160, 162, 182, 187
17	Get/Set	Produced Assy	USINT	100…187	161	52, 121, 161, 163, 181-187,189,190
19	Get/Set	Set To Defaults	BOOL	0…1	0	0=No action; 1=Reset
23	Get	I/O Produced Size	USINT	0…8	—	Size of I/O Produced Data in Bytes
24	Get	I/O Consumed Size	USINT	0…3	—	Size of I/O Consumed Data in Bytes
30	Get	DNet Voltage	UINT	xx.xx	—	DeviceNet Voltage xx.xx Volts
50	Get/Set	PNB COS Mask	WORD	0 to 0x00FF	0	Change of state mask for PNBs

The following common services are implemented for the DeviceNet Interface Object:

Table B.57 DeviceNet Interface Object Common Services

Service Code	Implemented for:		Service Name
	Class	Instance	
0x0E	No	Yes	Get_Attribute_Single
0x10	No	Yes	Set_Attribute_Single

Bulletin 284 CIP Information

Electronic Data Sheets

Electronic Data Sheets (EDS) files are specially formatted ASCII files that provide all of the information necessary for a configuration tool (e.g., RSNetWorx™ for DeviceNet™ Revision 3.21 Service Pack 2 or later) to access and alter parameters of the device. The EDS file contains all of the device information: number of parameter, groupings, parameter name, minimum, maximum, and default values, units, data format, and scaling.

EDS files for all the ArmorStart® Distributed Motor Controllers units are available from the Internet at **www.ab.com/networks/eds**.

They may also be built automatically by some configuration tools since much of the information necessary for an EDS file may be extracted from the ArmorStart Distributed Motor Controller.

VFD Type Product Codes and Name Strings

Product codes for the Bulletin 284 variable frequency drives are based on the Horse Power Rating and Supply Voltage rating of the Distributed Motor Controller. Table C.1 lists the product codes and name strings for the Bulletin 284 Distributed Motor Controllers:

Table C.1 Bulletin 284 Product Codes and Name Strings

284D Device Type	Product Code	Hp	Supply Voltage	Name String	Drive Type
22	0x192	0.50	480V AC	ArmorStart 284D PF40 480V 0.5 Hp	PF40
22	0x194	1	480V AC	ArmorStart 284D PF40 480V 1 Hp	PF40
22	0x196	2	480V AC	ArmorStart 284D PF40 480V 2 Hp	PF40
22	0x197	3	480V AC	ArmorStart 284D PF40 480V 3 Hp	PF40
22	0x198	5	480V AC	ArmorStart 284D PF40 480V 5 Hp	PF40

DeviceNet Objects

The ArmorStart Distributed Motor Controller supports the following DeviceNet object classes:

Table C.2 DeviceNet Object Classes

Class	Object
0x0001	Identity
0x0002	Message Router
0x0003	DeviceNet
0x0004	Assembly
0x0005	Connection
0x0008	Discrete Input Point
0x0009	Discrete Output Point
0x000F	Parameter Object
0x0010	Parameter Group Object
0x001D	Discrete Input Group
0x001E	Discrete Output Group
0x0029	Control Supervisor
0x002B	Acknowledge Handler
0x00B4	DN Interface Object

Identity Object — CLASS CODE 0x0001

The following class attributes are supported for the Identity Object:

Table C.3 Identity Object Class Attributes

Attribute ID	Access Rule	Name	Data Type	Value
1	Get	Revision	UINT	1

Identity Object

A single instance of the Identity Object is supported. The following instance attributes are supported:

Table C.4 Identity Object Instance Attributes

Attribute ID	Access Rule	Name	Data Type	Value
1	Get	Vendor	UINT	1
2	Get	Device Type	UINT	22 or 133
3	Get	Product Code	UINT	See Table C.1
4	Get	Revision Major Revision Minor Revision	Structure of: USINT USINT	Indicates Software Firmware Revision Number
5	Get	Status	WORD	Bit 0: 0 = not owned; 1 = owned by master Bit 2: 0 = Factory Defaulted; 1 = Configured Bit 8: Minor Recoverable fault Bit 9: Minor Unrecoverable fault Bit 10: Major Recoverable fault Bit 11: Major Unrecoverable fault
6	Get	Serial Number	UDINT	Unique Number for Each Device
7	Get	Product Name String Length ASCII String	Structure of: USINT STRING	Product code specific See Table C.1.
8	Get	State	USINT	Returns the value **3 = Operational**
9	Get	Configuration Consistency Value	UINT	Unique value depending on output of the parameter checksum algorithm.
10	Get/Set	Heartbeat Interval	USINT	In seconds. Default = 0

The following common services are implemented for the Identity Object:

Table C.5 Identity Object Common Services

Service Code	Implemented for		Service Name
	Class	Instance	
0x0E	No	Yes	Get_Attribute_Single
0x05	No	Yes	Reset
0x10	No	Yes	Set_Attribute_Single

Message Router — CLASS CODE 0x0002

No class or instance attributes are supported. The message router object exists only to rout explicit messages to other objects.

DeviceNet Object — CLASS CODE 0x0003

The following class attributes are supported for the DeviceNet Object:

Table C.6 DeviceNet Object Class Attributes

Attribute ID	Access Rule	Name	Data Type	Value
1	Get	Revision	UINT	2

A single instance (Instance 1) of the DeviceNet Object will be supported. The following instance attributes are supported:

Table C.7 DeviceNet Object Instance Attributes

Attribute ID	Access Rule	Name	Data Type	Value
1	Get/Set	Node Address	USINT	0…63
2	Get/Set	Baud Rate	USINT	0 = 125K 1 = 250K 2 = 500K
5	Get	Allocation Info • Allocation Choice • Master Node Addr	Structure of: • BYTE • USINT	Allocation_byte ❶ 0…63 = address 255 = unallocated
8	Get	MAC ID Switch Value	BOOL	0…63

❶ See Table C.8

Table C.8 Allocation_byte

Bit 0	Explicit messaging
Bit 1	Polled I/O
Bit 4	COS I/O
Bit 5	Cyclic I/O
Bit 6	Acknowledge Suppression

The following services are implemented for the DeviceNet Object:

Table C.9 DeviceNet Object Common Services

Service Code	Implemented for		Service Name
	Class	Instance	
0x0E	Yes	Yes	Get_Attribute_Single
0x10	No	Yes	Set_Attribute_Single
0x4B	No	Yes	Allocate_Master/Slave _Connection_Set
0x4C	No	Yes	Release_Master/Slave _Connection_Set

Assembly Object — CLASS CODE 0x0004

The following class attributes are supported for the Assembly Object

Table C.10 DeviceNet Assembly Object:

Attribute ID	Access Rule	Name	Data Type	Value
2	Get	Max Instance	UINT	190

All of the various instances of the assembly object will support Attribute 3. Table C.11 summarizes the various instances that are supported

Table C.11 DeviceNet Assembly Object Instance Attributes:

Attribute ID	Type	Description
3	Consumed	Required ODVA Consumed Instance
52	Produced	Required ODVA Produced Instance
120	Produced	Custom Parameter Based Word Wise Assembly
160	Consumed	Default Consumed Instance for DOL and SoftStart units
161	Produced	Default Produced Instance for DOL and SoftStart units
162	Consumed	Standard Consumed Instance for DOL and SoftStart with Network Inputs
163	Produced	Standard Produced Instance for DOL and SoftStart with Network Outputs
164	Consumed	Default Consumed Instance for Inverter type units
165	Produced	Default Produced Instance for Inverter type units
166	Consumed	Standard Consumed Instance for Inverter type units with Network Inputs
167	Produced	Standard Produced Instance for Inverter type units with Network Outputs
170	Consumed	Power Flex Native Format Consumed Instance
171	Produced	Power Flex Native Format Produced Instance
181	Produced	User Inputs
182	Consumed	Consumed Network Bits (a.k.a Network Inputs)
183	Produced	Produced Network Bits (a.k.a. Network Outputs)
184	Produced	Trip Status Bits
185	Produced	Starter Status Bits
186	Produced	DeviceNet Status Bits
187	Consumed	Starter Control Bits
188	Consumed	Drive Control Bits
189	Produced	Warning Status Bits
190	Produced	1799 - ZCIO Bits

Custom Parameter Based Word-Wise I/O Assembly

Table C.12 CustomParameter Based Word Wise (Produced) Assembly Instance

Instance 120									
Word	**Byte**	**Bit 7**	**Bit 6**	**Bit 5**	**Bit 4**	**Bit 3**	**Bit 2**	**Bit 1**	**Bit 0**
0	0	Value of the parameter pointed to by **Produced Word 0 Param** (low byte)							
	1	Value of the parameter pointed to by **Produced Word 0 Param** (high byte)							
1	2	Value of the parameter pointed to by **Produced Word 1 Param** (low byte)							
	3	Value of the parameter pointed to by **Produced Word 1 Param** (high byte)							
2	4	Value of the parameter pointed to by **Produced Word 2 Param** (low byte)							
	5	Value of the parameter pointed to by **Produced Word 2 Param** (high byte)							
3	6	Value of the parameter pointed to by **Produced Word 3 Param** (low byte)							
	7	Value of the parameter pointed to by **Produced Word 3 Param** (high byte)							

Word-Wise Bit-Packed Assemblies

Assemblies whose instance numbers are 180...189 are all one word (16 bits) long. They can be used stand-alone, but their main use is to assemble information for EDS file parameters. These Word-Wise assemblies become the building blocks for the Custom Parameter Based Word-Wise assembly described in Table C.12.

Table C.13 Instance 181 — Hardware Inputs 1…16

Instance 181 — This is a Read Only Status Assembly								
Byte	**Bit 7**	**Bit 6**	**Bit 5**	**Bit 4**	**Bit 3**	**Bit 2**	**Bit 1**	**Bit 0**
0	—	—	—	—	Input 4	Input 3	Input 2	Input 1
1	—	—	—	—	—	—	—	—

Table C.14 Instance 182 — Consumed Network Inputs 1…16

Instance 182 — This is a Read/Write Control Assembly								
Byte	**Bit 7**	**Bit 6**	**Bit 5**	**Bit 4**	**Bit 3**	**Bit 2**	**Bit 1**	**Bit 0**
0	NetInput 8	NetInput 7	NetInput 6	NetInput 5	NetInput 4	NetInput 3	NetInput 2	NetInput 1
1	NetInput 16	NetInput 15	NetInput 14	NetInput 13	NetInput 12	NetInput 11	NetInput 10	NetInput 9

Table C.15 Instance 183 — Produced Network Outputs 1…15

Instance 183 — This is a Read Only Status Assembly								
Byte	**Bit 7**	**Bit 6**	**Bit 5**	**Bit 4**	**Bit 3**	**Bit 2**	**Bit 1**	**Bit 0**
0	Net Out 8	Net Out 7	Net Out 6	Net Out 5	Net Out 4	Net Out 3	Net Out 8	Net Out 1
1	Reserved	Net Out 15	Net Out 14	Net Out 13	Net Out 12	Net Out 11	Net Out 10	Net Out 9

Table C.16 Instance 184 — Trip Status

Instance 184 — This is a Read Only Status Assembly								
Byte	**Bit 7**	**Bit 6**	**Bit 5**	**Bit 4**	**Bit 3**	**Bit 2**	**Bit 1**	**Bit 0**
0	Over Temp	IO Fault	Control Power	Stall	Gnd Fault	Phase Short	OL Trip	140M Trip
1	Misc. Fault	Retries	HW Fault	EEPROM	DC Bus	Int Comm	DNet Flt	Over Current

Table C.17 Instance 185 — Starter Status

Instance 185 — This is a Read Only Status Assembly								
Byte	**Bit 7**	**Bit 6**	**Bit 5**	**Bit 4**	**Bit 3**	**Bit 2**	**Bit 1**	**Bit 0**
0	At Reference	Net Ref Status	Net Ctl Status	Ready	Running Rev	Running Fwd	Alarm	Tripped
1	Reserved	Contactor 1 ❶	140M On	HOA Status	KP Hand	KP Jog	DrvOpto2	DrvOpto1

❶ Refers to source brake contactor status.

Table C.18 Instance 186 — DeviceNet Status

Instance 186 — This is a Read Only Status Assembly								
Byte	**Bit 7**	**Bit 6**	**Bit 5**	**Bit 4**	**Bit 3**	**Bit 2**	**Bit 1**	**Bit 0**
0	—	—	—	I/O Idle	I/O Flt	Exp Flt	I/O Cnxn	Exp Cnxn
1	ZIP 4 Flt	ZIP 4 Cnxn	ZIP 3 Flt	ZIP 3 Cnxn	ZIP 2 Flt	ZIP 2 Cnxn	ZIP 1 Flt	ZIP 1 Cnxn

Instance 187 — This is a Read/Write Assembly								
Byte	**Bit 7**	**Bit 6**	**Bit 5**	**Bit 4**	**Bit 3**	**Bit 2**	**Bit 1**	**Bit 0**
0	User Out B	User Out A	—	Jog Rev	Jog Fwd	Fault Reset	Run Rev	Run Fwd
1	—	—	—	—	—	—	—	—

Instance 188 — This is a Read/Write Assembly								
Byte	**Bit 7**	**Bit 6**	**Bit 5**	**Bit 4**	**Bit 3**	**Bit 2**	**Bit 1**	**Bit 0**
0	—	Freq Select 3	Freq Select 2	Freq Select 1	Decel 2	Decel 1	Accel 2	Accel 1
1	—	—	—	—	Drv In 4	Drv In 3	Drv In 2	Drv In 1

Table C.19 Instance 189 This is a "Read Only" assembly

Instance 189 Warning Status Bits								
Byte	**Bit 7**	**Bit 6**	**Bit 5**	**Bit 4**	**Bit 3**	**Bit 2**	**Bit 1**	**Bit 0**
0	Reserve d	I/O Warning	Control Power Warning	—	—	—	—	—
1	—	—	HW Warn	—	—	—	DN Warn	PI Warn

Table C.20 Instance 190 is the 1999-ZCIO Native Format Produced Assembly

Instance 190 1799-ZCIO Native Format Produced Assembly								
Byte	**Bit 7**	**Bit 6**	**Bit 5**	**Bit 4**	**Bit 3**	**Bit 2**	**Bit 1**	**Bit 0**
0	Running Rev	Running Fwd	Warning	Tripped	Input 3	Input 2	Input 1	Input 0
1	Reserved	Logic Enable	Reserved				140M On	HOA
2	Drive In 4	Drive In 3	Drive In 2	Drive In 1	User Out B	User Out A	Run Rev	Run Fwd
3	Reserved						Jog Rev	Jog Fwd
4	Net Out 8	Net Out 7	Net Out 6	Net Out 5	Net Out 4	Net Out 3	Net Out 2	Net Out 1
5	ZIP CCV (Low)							
6	ZIP CCV (High)							

Standard Distributed Motor Controller I/O Assemblies

Standard Distributed Motor Controller I/O Assemblies are available on all Starter Types.

Standard Distributed Motor Controller Output (Consumed) Assemblies

Instance 3 is the required output (consumed) assembly defined in the DeviceNet Motor Starter Profile.

Table C.21 ODVA Starter

Byte	Bit 7	Bit 6	Bit 5	Bit 4	Bit 3	Bit 2	Bit 1	Bit 0
0	—	—	—	—	—	—	—	Run Fwd

Instance 160 is the default output (consumed) assembly for Bulletin 280/281 Distributed Motor Controllers

Table C.22 Instance 160 — Default Consumed Standard Distributed Motor Controller.

Byte	Bit 7	Bit 6	Bit 5	Bit 4	Bit 3	Bit 2	Bit 1	Bit 0
0	User Out B	User Out A				Fault Reset	Run Rev	Run Fwd

Instance 162 is the standard output (consumed) assembly with Network Inputs for Bulletin 280/281 Distributed Motor Controllers

Table C.23 Standard Consumed Starter with Network Inputs.

Byte	Bit 7	Bit 6	Bit 5	Bit 4	Bit 3	Bit 2	Bit 1	Bit 0
0	User Out B	User Out A				Fault Reset	Run Rev	Run Fwd
1	Net In 8	Net In 7	Net In 6	Net In 5	Net In 4	Net In 3	Net In 2	Net In 1
2	Net In 16	Net In 15	Net In 14	Net In 13	Net In 12	Net In 11	Net In 10	Net In 9

Bulletin 284 Distributed Motor Controller I/O Assemblies

Bulletin 284 Distributed Motor Controller IO Assemblies are available ONLY on the Bulletin 284 Distributed Motor Controller.

Standard Distributed Motor Controller Output (Consumed) Assemblies

Instance 164 is the default output (consumed) assembly for Inverter Type Distributed Motor Controllers

Table C.24 Instance 164 — Default Consumed Inverter Type Distributed Motor Controller.

Byte	Bit 7	Bit 6	Bit 5	Bit 4	Bit 3	Bit 2	Bit 1	Bit 0
0	User Out B	User Out A	—	Jog Rev	Jog Fwd	Fault Reset	Run Rev	Run Fwd
1	Drive In 4	Drive In 3	Drive In 2	Drive In 1	Decel 2	Decel 1	Accel 2	Accel 1
2	Comm Frequency Command (Low) (xxx.x Hz)							
3	Comm Frequency Command (High) (xxx.x Hz)							

Instance 166 is the standard output (consumed) assembly for Inverter Type Distributed Motor Controllers with network inputs

Table C.25 Instance 166 — Consumed Inverter Type Starter with Network Inputs

Byte	Bit 7	Bit 6	Bit 5	Bit 4	Bit 3	Bit 2	Bit 1	Bit 0
0	User Out B	User Out A	—	Jog Rev	Jog Fwd	Fault Reset	Run Rev	Run Fwd
1	Drive In 4	Drive In 3	Drive In 2	Drive In 1	Decel 2	Decel 1	Accel 2	Accel 1
2	Comm Frequency Command (Low) (xxx.x Hz)							
3	Comm Frequency Command (High) (xxx.x Hz)							
4	Net In 8	Net In 7	Net In 6	Net In 5	Net In 4	Net In 3	Net In 2	Net In 1
5	Net In 16	Net In 15	Net In 14	Net In 13	Net In 12	Net In 11	Net In 10	Net In 9

Standard Distributed Motor Controller Input (Produced) Assemblies

Instance 52 is the required input (produced) assembly defined in the DeviceNet Motor Starter Profile

Table C.26 Instance 52 — ODVA Starter.

Byte	Bit 7	Bit 6	Bit 5	Bit 4	Bit 3	Bit 2	Bit 1	Bit 0
—	—	—	—	—	—	Running	—	Fault

Instance 161 is the default input (produced) assembly for the Bulletin 280/281 Distributed Motor Controller

Table C.27 Instance 161 — Default Produced Standard Distributed Motor.

Byte	Bit 7	Bit 6	Bit 5	Bit 4	Bit 3	Bit 2	Bit 1	Bit 0
0	—	—	—	Ready	Running Rev	Running Fwd	—	Tripped
1	—	—	140M On	HOA Stat.	User In 3	User In 2	User In 1	User In 0

Instance 163 is the standard input (produced) assembly with Network Outputs for the Bulletin 280/281 Distributed Motor Controller

Table C.28 Instance 163 — Standard Produced Starter with Network Outputs and ZIP CCV.

Byte	Bit 7	Bit 6	Bit 5	Bit 4	Bit 3	Bit 2	Bit 1	Bit 0
0				Ready	Running Rev	Running Fwd	Alarm	Tripped
1			140M On	HOA	User In 4	User In 3	User In 2	User In 1
2	Net Out 8	Net Out 7	Net Out 6	Net Out 5	Net Out 4	Net Out 3	Net Out 2	Net Out 1
3	Logic Enable Stat	Net Out 15	Net Out 14	Net Out 13	Net Out 12	Net Out 11	Net Out 10	Net Out 9
4	ZIP Device Value Key (Low)							
5	ZIP Device Value Key (High)							

Inverter Type Distributed Motor Controller Input (Produced) Assemblies

Instance 165 is the default input (produced) assembly for Inverter Type Distributed Motor Controllers

Table C.29 Default Produced Inverter Type Distributed Motor Controller.

Byte	Bit 7	Bit 6	Bit 5	Bit 4	Bit 3	Bit 2	Bit 1	Bit 0
0	At Reference	Net Ref Status	Net Ctl Status	Ready	Running Rev	Running Fwd	Alarm	Tripped
1	Reserved	Contactor 1 ❶	140M On	HOA	User In 4	User In 3	User In 2	User In 1
					Reserved	Reserved	Reserved	Reserved
2	Output Frequency (Low) (xxx.x Hz)							
3	Output Frequency (High) (xxx.x Hz)							

❶ Refers to source brake contactor status.

Instance 167 is input (produced) assembly for Inverter Type Distributed Motor Controllers with Network Outputs

Table C.30 Instance 167 —Produced Inverter Type Starter with Network Outputs

Byte	Bit 7	Bit 6	Bit 5	Bit 4	Bit 3	Bit 2	Bit 1	Bit 0
0	At Reference	Net Ref Status	Net Ctl Status	Ready	Running Rev	Running Fwd	Alarm	Tripped
1	Reserved	Contactor 1 ❶	140M On	HOA Status	User In 4	User In 3	User In 2	User In 1
2	Output Frequency (Low) (xxx.x Hz)							
3	Output Frequency (High) (xxx.x Hz)							
4	Net Out 8	Net Out 7	Net Out 6	Net Out 5	Net Out 4	Net Out 3	Net Out 2	Net Out 1
5		Net Out 15	Net Out 14	Net Out 13	Net Out 12	Net Out 11	Net Out 10	Net Out 9
6	ZIP Device Value Key (Low)							
7	ZIP Device Value Key (High)							

❶ Refers to source brake contactor status.

Power Flex Native Assemblies

These assembly instances have the same data format as the Power Flex Drives with a DNet adapter.

Power Flex Native Consumed Assembly

Instance 170 is the Power Flex Native Format Consumed Assembly

Table C.31 Instance 170 — Power Flex Native Format Consumed Assembly.

Byte	Bit 7	Bit 6	Bit 5	Bit 4	Bit 3	Bit 2	Bit 1	Bit 0
0	MOP Inc	reserved	Direction Cmd		Flt Reset	Jog	Start	Stop
1	MOP Dec	Freq Select 3	Freq Select 2	Freq Select 1	Decel 2	Decel 1	Accel 2	Accel 1
2	Comm Frequency Command (Low)							
3	Comm Frequency Command (High)							

Table C.32 Logic Command

Accel 2	Accel 1		Description
0	0		No Command
0	1		Accel 1 Enable
1	0		Accel 2 Enable
1	1		Hold Accel Rate Selected
Decel 2	**Decel 1**		
0	0		No Command
0	1		Decel 1 Enable
1	0		Decel 2 Enable
1	1		Hold Decel Rate Selected
Freq Select 3	**Freq Select 2**	**Freq Select 1**	
0	0	0	No Command
0	0	1	Freq Source = P136 (Start Source)
0	1	0	Freq Source = P169 (Internal Freq)
0	1	1	Freq Source = Comms
1	0	0	P170 (Preset Freq 0)
1	0	1	P171 (Preset Freq 1)
1	1	0	P172 (Preset Freq 2)
1	1	1	P173 (Preset Freq 3)

Power Flex Native Produced Assembly

Instance 171 is the Power Flex Native Format Produced Assembly.

Table C.33 Instance 171 — PowerFlex Native Format Produced Assembly

Byte	Bit 7	Bit 6	Bit 5	Bit 4	Bit 3	Bit 2	Bit 1	Bit 0
0	Faulted	Alarm	Deceling	Acceling	Rot Fwd	Cmd Fwd	Running	Ready
1	Drv In 4 Stat	Drv In 3 Stat	Drv In 2 Stat	Drv In 1	Param Locked	Ctl fm Net	Ref fm Net	At Ref
2	Drive Error Code (low)							
3	Drive Error Code (high)							

Connection Object — CLASS CODE 0x0005

No class attributes are supported for the Connection Object.

Multiple instances of the Connection Object are supported, Instances 1, 2, and 4 from the Group 2 predefined master/slave connection set, Instances 5 and 6 are available through explicit UCMM connections.

Instance 1 is the Predefined Group 2 Connection Set Explicit Message Connection. The following Instance 1 attributes is supported

Table C.34 Connection Object Instance 1 Attributes:

Attribute ID	Access Rule	Name	Data Type	Value
1	Get	State	USINT	0 = non-existent 1 = configuring 3 = established 4 = timed out
2	Get	Instance Type	USINT	0 = Explicit Message
3	Get	Transport Class Trigger	USINT	0x83 — Server, Transport Class 3
4	Get	Produced Connection ID	UINT	10xxxxxx011 xxxxxx = node address
5	Get	Consumed Connection ID	UINT	10xxxxxx100 xxxxxx = node address
6	Get	Initial Comm Characteristics	USINT	0x22
7	Get	Produced Connection Size	UINT	0x61
8	Get	Consumed Connection Size	UINT	0x61
9	Get/Set	Expected Packet Rate	UINT	in milliseconds
12	Get	Watchdog Action	USINT	01 = auto delete 03 = deferred delete
13	Get	Produced Connection Path Length	UINT	0
14	Get	Produced Connection Path		Empty
15	Get	Consumed Connection Path Length	UINT	0
16	Get	Consumed Connection Path		Empty

Instance 2 is the Predefined Group 2 Connection Set Polled I/O Message Connection. The following Instance 2 attributes are supported

Table C.35 Connection Object Instance 2 Attributes:

Attribute ID	Access	Name	Data Type	Value
1	Get	State	USINT	0 = non-existent 1 = configuring 3 = established 4 = timed out
2	Get	Instance Type	USINT	1 = I/O Connection
3	Get	Transport Class Trigger	USINT	0x82 — Server, Transport Class 2 (If alloc_choice != polled and ack suppression is enabled then value = 0x80)
4	Get	Produced Connection ID	UINT	01111xxxxxx xxxxxx = node address
5	Get	Consumed Connection ID	UINT	10xxxxxx101 xxxxxx = node address
6	Get	Initial Comm Characteristics	USINT	0x21
7	Get	Produced Connection Size	UINT	0…8
8	Get	Consumed Connection Size	UINT	0…8
9	Get/Set	Expected Packet Rate	UINT	in milliseconds
12	Get/Set	Watchdog Action	USINT	0 = transition to timed out 1 = auto delete 2 = auto reset
13	Get	Produced Connection Path Length	UINT	8
14	Get/Set	Produced Connection Path		21 04 00 25 (assy inst) 00 30 03
15	Get	Consumed Connection Path Length	UINT	8
16	Get/Set	Consumed Connection Path		21 04 00 25 (assy inst) 00 30 03

Instance 4 is the Predefined Group 2 Connection Set Change of State/ Cyclic I/O Message Connection. The following Instance 4 attributes are supported

Table C.36 Connection Object Instance 4 Attributes:

Attribute ID	Access Rule	Name	Data Type	Value
1	Get	State	USINT	0 = non-existent 1 = configuring 3 = established 4 = timed out
2	Get	Instance Type	USINT	1 = I/O Connection
3	Get	Transport Class Trigger	USINT	0x00 (Cyclic, unacknowledged) 0x03 (Cyclic, acknowledged) 0x10 (COS, unacknowledged) 0x13 (COS, acknowledged)
4	Get	Produced Connection ID	UINT	01101xxxxxx xxxxxx = node address
5	Get	Consumed Connection ID	UINT	10xxxxxx101 xxxxxx = node address
6	Get	Initial Comm Characteristics	USINT	0x02 (acknowledged) 0x0F (unacknowledged)
7	Get	Produced Connection Size	UINT	0…8
8	Get	Consumed Connection Size	UINT	0…8
9	Get/Set	Expected Packet Rate	UINT	in milliseconds
12	Get	Watchdog Action	USINT	0 = transition to timed out 1 = auto delete 2 = auto reset
13	Get	Produced Connection Path Length	UINT	8
14	Get	Produced Connection Path		21 04 00 25 (assy inst) 00 30 03
15	Get	Consumed Connection Path Length	UINT	8
16	Get/Set	Consumed Connection Path		21 04 00 25 (assy inst) 00 30 03

Instances 5…6 will be available Group 3 explicit message connections that are allocated through the UCMM. The following attributes are supported

Table C.37 Connection Object Instance 5...7 Attributes:

Attribute ID	Access Rule	Name	Data Type	Value
1	Get	State	USINT	0 = non-existent 1 = configuring 3 = established 4 = timed out
2	Get	Instance Type	USINT	0 = Explicit Message
3	Get	Transport Class Trigger	USINT	0x83 — Server, Transport Class 3
4	Get	Produced Connection ID	UINT	Depends on message group and Message ID
5	Get	Consumed Connection ID	UINT	Depends on message group and Message ID
6	Get	Initial Comm Characteristics	USINT	0x33 (Group 3)
7	Get	Produced Connection Size	UINT	0
8	Get	Consumed Connection Size	UINT	
9	Get/Set	Expected Packet Rate	UINT	in milliseconds
12	Get	Watchdog Action	USINT	01 = auto delete 03 = deferred delete
13	Get	Produced Connection Path Length	UINT	0
14	Get	Produced Connection Path		Empty
15	Get	Consumed Connection Path Length	UINT	0
16	Get	Consumed Connection Path		Empty

Instances 8…11 are ZIP Consumers. The following instance attributes will be supported:

Table C.38 Connection Object instance 8...11 Attributes

Attribute ID	Access Rule	Name	Data Type	Value
1	Get	State	USINT	0=nonexistant 1=configuring 3=established
2	Get	Instance Type	USINT	1=I/O Connection
3	Get	Transport Class Trigger	USINT	0x20 (COS, unacknowledged)
4	Get	Produced Connection ID	UINT	FFFF (not producing data)
5	Get	Consumed Connection ID	UINT	01101xxxxxx xxxxxx=node address
6	Get	Initial Comm Characteristics	USINT	0xF0 (unacknowledged)
7	Get	Produced Connection Size	UINT	0
8	Get	Consumed Connection Size	UINT	8
9	Get/Set	Expected Packet Rate	UINT	in milliseconds
12	Get	Watchdog Action	USINT	2=auto reset
13	Get	Produced Connection Path Length	UINT	0
14	Get	Produced Connection Path		0
15	Get	Consumed Connection Path Length	UINT	8
16	Get	Consumed Connection Path		21 0E 03 25 01 00 30 02

The following services are implemented for the Connection Object

Table C.39 Connection Objects Common Services:

Service Code	Implemented for		Service Name
	Class	Instance	
0x05	No	Yes	Reset
0x0E	No	Yes	Get_Attribute_Single
0x10	No	Yes	Set_Attribute_Single

Discrete Input Point Object — CLASS CODE 0x0008

The following class attributes are supported for the Discrete Input Point Object

Table C.40 Discrete Input Point Object Class Attributes:

Attribute ID	Access Rule	Name	Data Type	Value
1	Get	Revision	UINT	2
2	Get	Max Instance	UINT	4

Four instances of the Discrete Input Point Object are supported. All instances will contain the following attributes

Table C.41 Discrete Input Point Object Instance Attributes:

Attribute ID	Access Rule	Name	Data Type	Value
3	Get	Value	BOOL	0 = OFF, 1 = ON
115	Get/Set	Force Enable	BOOL	0 = Disable, 1 = Enable
116	Get/Set	Force Value	BOOL	0 = OFF, 1 = ON

The following common services are implemented for the Discrete Input Point Object

Table C.42 Discrete Input Point Object Instance Common Services:

Service Code	Implemented for		Service Name
	Class	Instance	
0x0E	Yes	Yes	Get_Attribute_Single
0x10	No	Yes	Set_Attribute_Single

Discrete Output Point Object — CLASS CODE 0x0009

The following class attributes are supported for the Discrete Output Point Object:

Table C.43 Discrete Output Point Object Class Attributes

Attribute ID	Access Rule	Name	Data Type	Value
1	Get	Revision	UINT	1
2	Get	Max Instance	UINT	10

Ten instances of the Discrete Output Point Object are supported. Table C.44 summarizes the DOP instances:

Table C.44 Discrete Output Point Object Instance Attributes

Instance ID	Name	Alternate Mapping	Description
1	Run Fwd Output	0029 – 01 – 03	Run Forward output. For all starter types, this output is hard wired from the ArmorStart CPU to the actuator
2	Run Rev Output	0029 – 01 – 04	Run Reverse output. For all starter types, this output is hard wired from the ArmorStart CPU to the actuator
3	User Output 1	none	These are the two ArmorStart user outputs.
4	User Output 2	none	
5	Drive Input 1	none	These four instances exist for Inverter units only. They are connected to Drive Inputs 1…4.
6	Drive Input 2	none	
7	Drive Input 3	none	
8	Drive Input 4	none	
9	Drive Jog Fwd	none	This instances exists for Inverter units only
10	Drive Jog Rev	none	

All instances will contain the following attributes

Table C.45 Discrete Output Point Instance Attributes.

Attribute ID	Access Rule	Name	Data Type	Value
3	Get	Value	BOOL	0 = OFF, 1 = ON
5	Get/Set	Fault Action	BOOL	0 = Fault Value attribute, 1 = Hold Last State
6	Get/Set	Fault Value	BOOL	0 = OFF, 1 = ON
7	Get/Set	Idle Action	BOOL	0 = Fault Value attribute, 1 = Hold Last State
8	Get/Set	Idle Value	BOOL	0 = OFF, 1 = ON
113	Get/Set ❶	Pr Fault Action	BOOL	0 = Pr Fault Value attribute, 1 = Ignore
114	Get/Set ❶	Pr Fault Value	BOOL	0 = OFF, 1 = ON
115	Get/Set	Force Enable	BOOL	0 = Disable, 1 = Enable
116	Get/Set	Force Value	BOOL	0 = OFF, 1 = ON

❶ For DOP Instances 1 and 2, and 9 and 10, Attributes 113 and 114 have Get only access, and their values are always 0

The following common services are implemented for the Discrete Output Point Object

Table C.46 Discrete Output Common Services:

Service Code	Implemented for		Service Name
	Class	Instance	
0x0E	No	Yes	Get_Attribute_Single
0x10	No	Yes	Set_Attribute_Single

Discrete Output Point Object Special Requirements

DOP Instances 3 and 4 Special Behavior

There are many sources that can affect an output point's value: an I/O message, and explicit message, local logic, network fault and idle conditions, and protection fault conditions. An output point must know how to select which source of data to use to drive its value attribute.

An output that is not bound behaves much the same as in the DeviceNet Specification. One notable addition to DOP behavior for the ArmorStart implementation is the Protection Fault Action and Protection Fault Value attributes determine the behavior of the DOP when the ArmorStart faults on a protection fault.

The following State Transition Diagram is used for Unbound DOP Instances 3…8 when they are not used in a Devicelogix™ Program

Figure C.1 State Transition Diagram — Unbound DOP 3…8

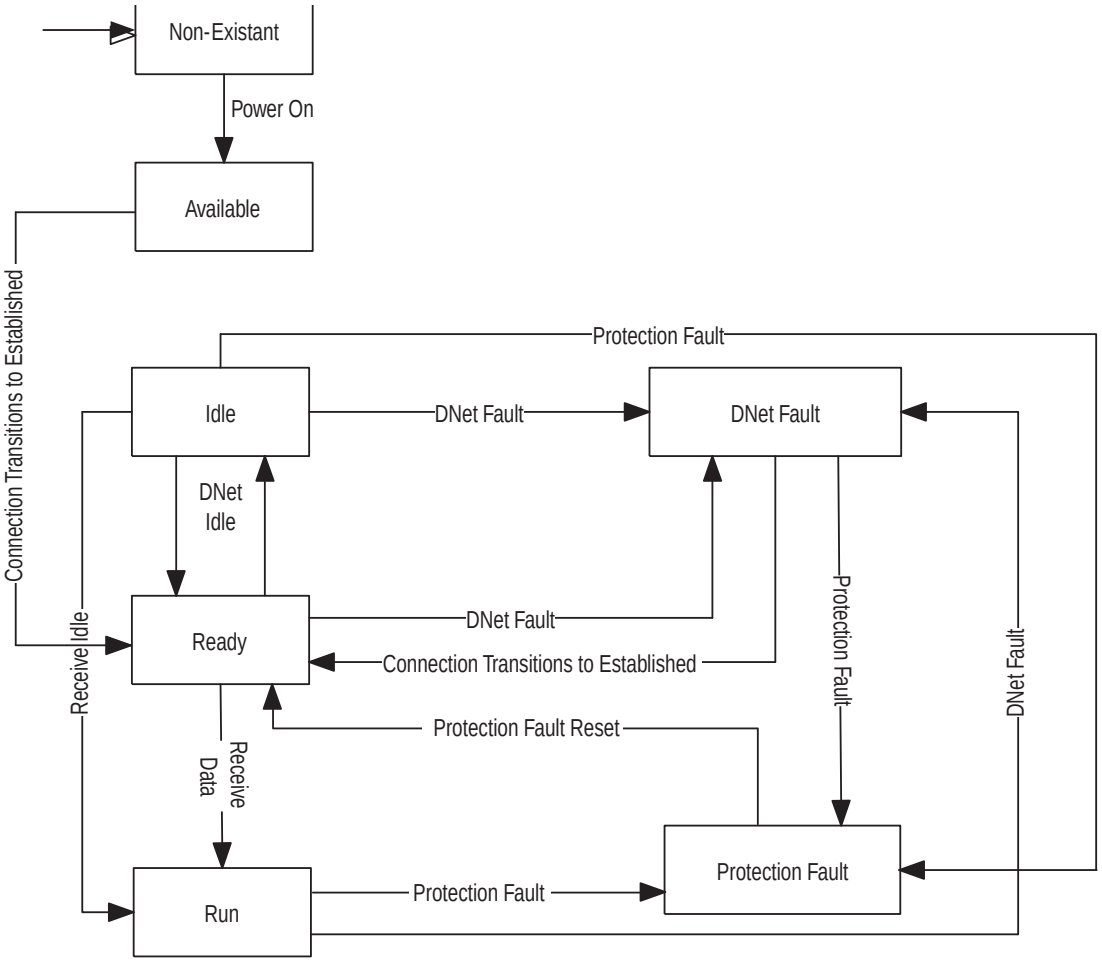

DOP Instances 1, 2, 9, and 10 Special Behavior

Besides the sources that can affect output points 3 and 4, DOPs 1 and 2 can be affected by keypad inputs since they double as the Run Forward and Run Reverse outputs. This adds complexity to their behavior, so their behavior is defined in this section separately.

The following State Transition Diagram is used for DOP Instances 1, 2, 9, and 10:

Figure C.2 DOP Instances 1, 2, 9, and 10

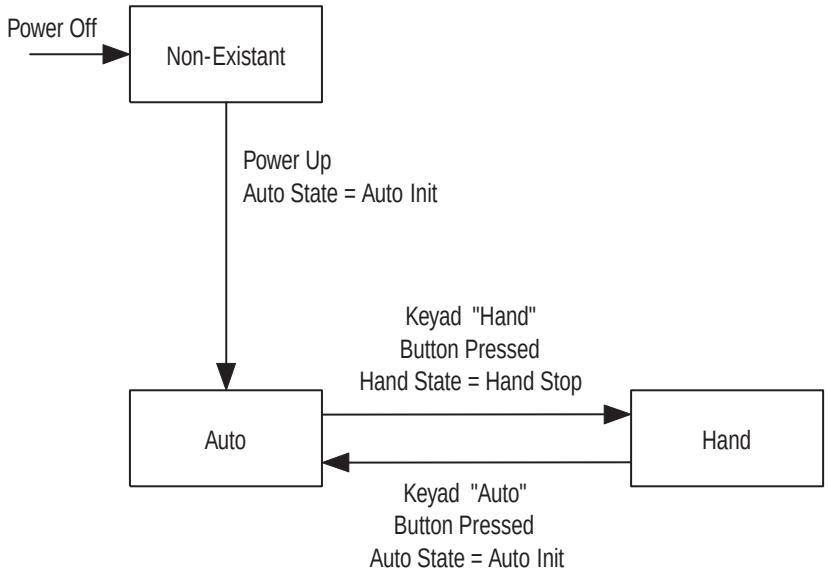

The following State Transition Diagram is used in Auto State for Unbound DOP Instances 1, 2, 9, and 10

Figure C.3 Auto State for Unbound DOP Instances 1, 2, 9, and 10

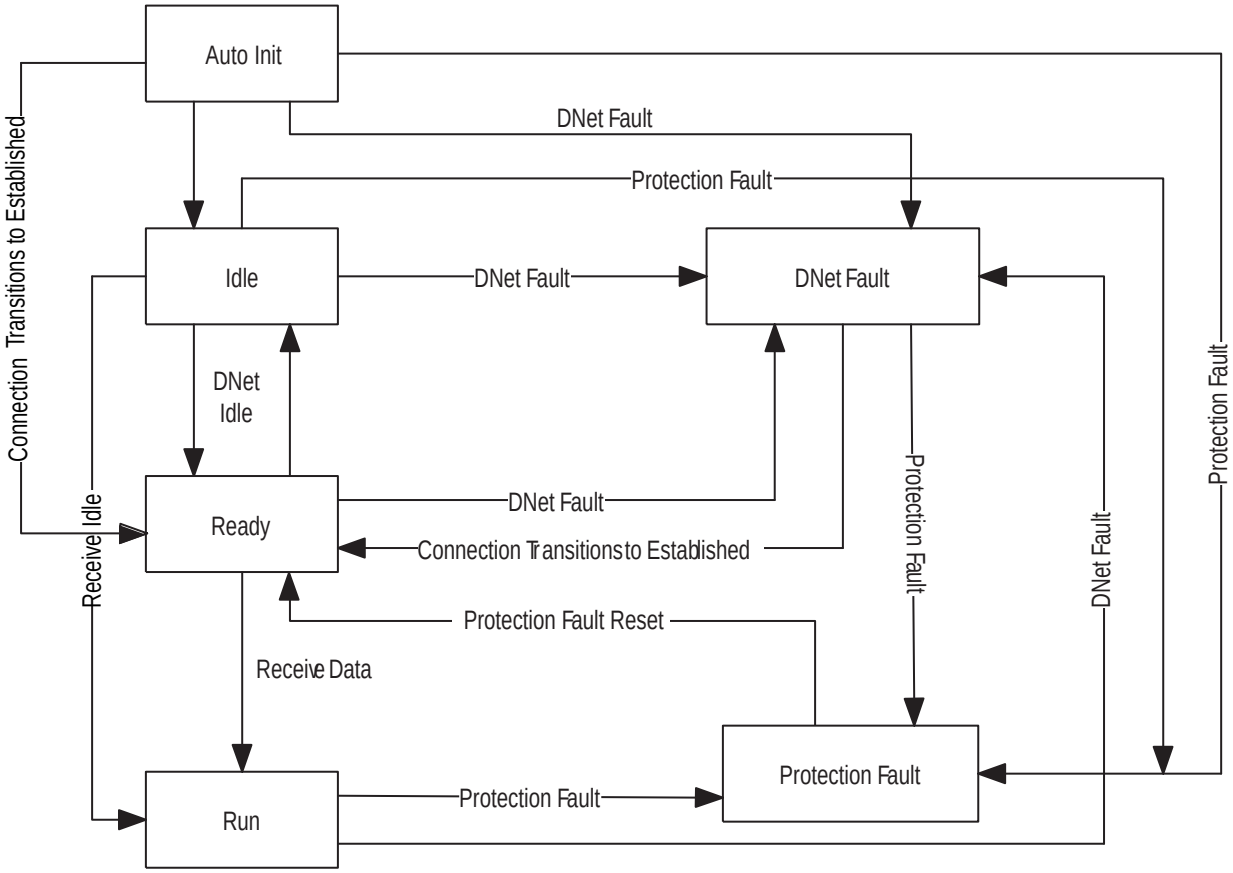

The following State Transition Diagram is used in Hand State for Bound or Unbound DOPs 1, 2, 9, and 10 with Parameter 45 Keypad Mode set to 1 = momentary.

Figure C.4

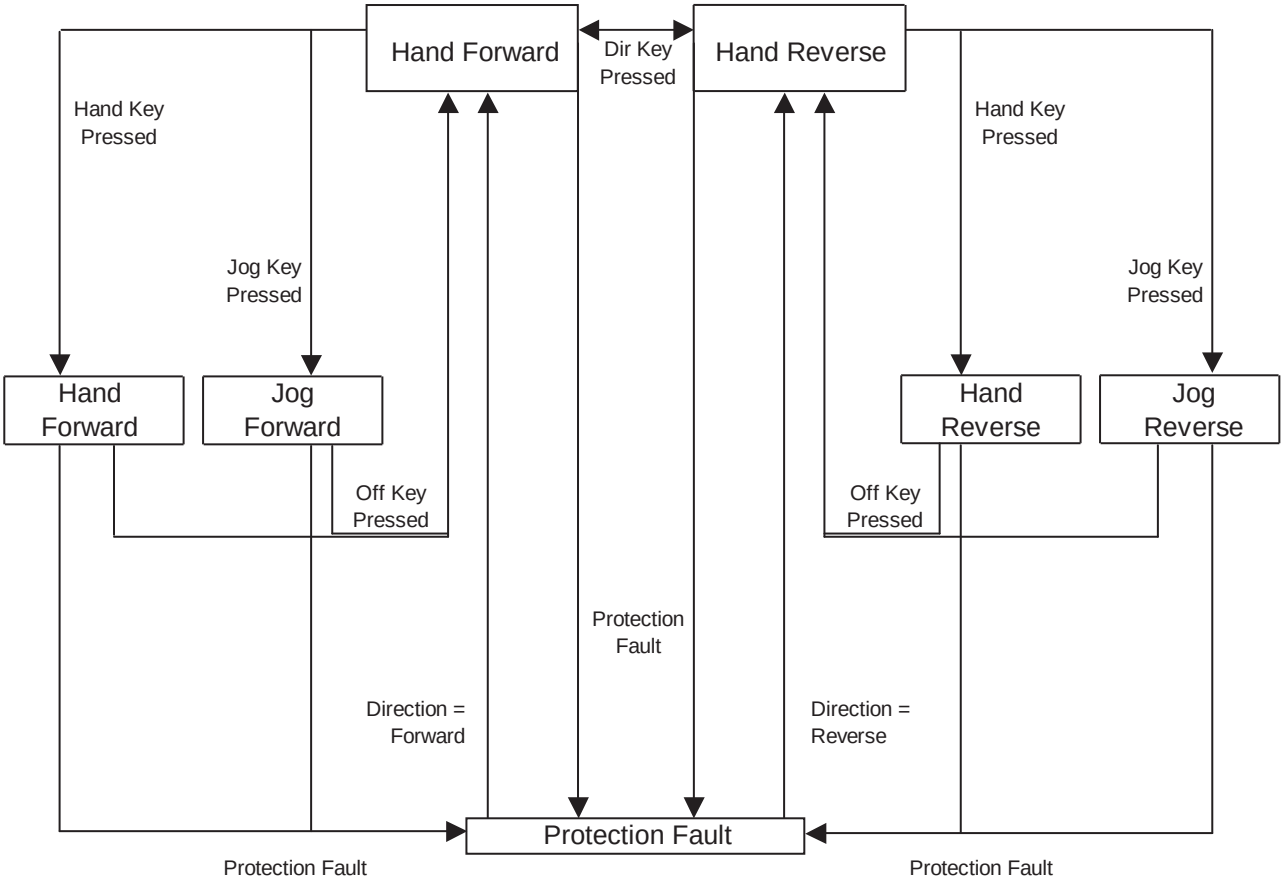

The following State Transition Diagram is used in Hand State for Bound or Unbound DOPs 1, 2, 9, and 10 with Parameter 45 Keypad Mode set to 1 = maintained.

Figure C.5

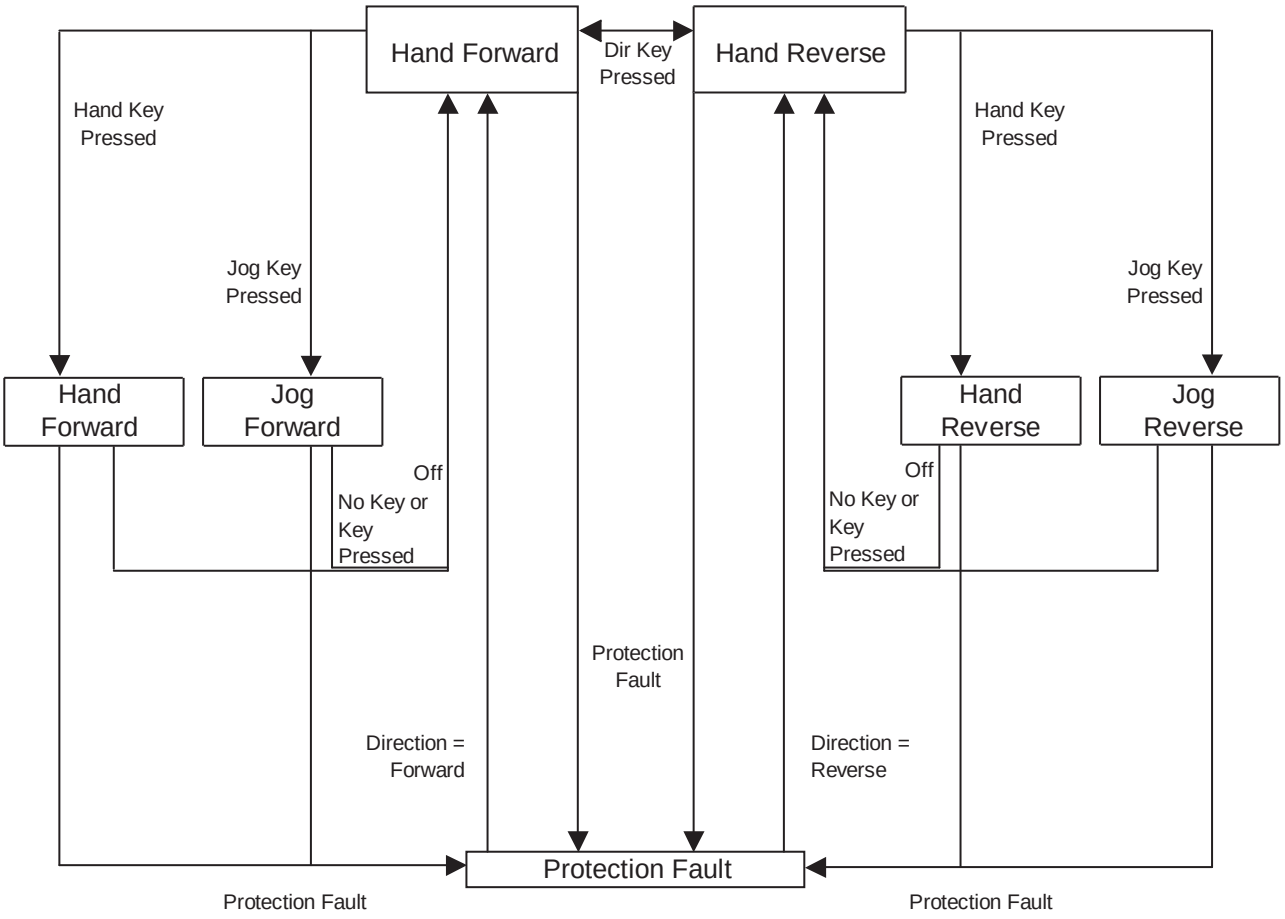

Parameter Object — CLASS CODE 0x000F

The following class attributes are supported for the Parameter Object

Table C.47 Parameter Object Class Attributes:

Attribute ID	Access Rule	Name	Data Type
1	Get	Revision	UINT
2	Get	Max Instance	UINT
8	Get	Parameter Class Descriptor	WORD
9	Get	Configuration Assembly Instance	UINT

The number of instances of the parameter object depends upon the type of Distributed Motor Controller. There will be a standard set of instances reserved (1…99) for all starters. These instances will be followed by a unique set of instances for each starter type (Bulletin 280/281 or 284).

The following instance attributes are implemented for all parameter attributes

Table C.48 Parameter Object Instance Attributes:

Attribute ID	Access Rule	Name	Data Type
1	Get/Set	Value	Specified in Descriptor
2	Get	Link Path Size	USINT
3	Get	Link Path	Array of: • BYTE • EPATH
4	Get	Descriptor	WORD
5	Get	Data Type	EPATH
6	Get	Data Size	USINT
7	Get	Parameter Name String	SHORT_STRING
8	Get	Units String	SHORT_STRING
9	Get	Help String	SHORT_STRING
10	Get	Minimum Value	Specified in Descriptor
11	Get	Maximum Value	Specified in Descriptor
12	Get	Default Value	Specified in Descriptor
13	Get	Scaling Multiplier	UINT
14	Get	Scaling Divisor	UINT
15	Get	Scaling Base	UINT
16	Get	Scaling Offset	INT
17	Get	Multiplier Link	UINT
18	Get	Divisor Link	UINT
19	Get	Base Link	UINT
20	Get	Offset Link	UINT
21	Get	Decimal Precision	USINT

The following common services are implemented for the Parameter Object

Table C.49 Parameter Object Common Services:

Service Code	Implemented for		Service Name
	Class	Instance	
0x0E	Yes	Yes	Get_Attribute_Single
0x10	No	Yes	Set_Attribute_Single
0x01	No	Yes	Get_Attributes_All

Parameter Group Object — CLASS CODE 0x0010

The following class attributes are supported for the Parameter Object

Table C.50 Parameter Group Object Class Attributes:

Attribute ID	Access Rule	Name	Data Type
1	Get	Revision	UINT
2	Get	Max Instance	UINT

All Bulletin 284 Motor Starters have the following instances of the parameter group object:

- Instance 1 = DeviceLogix Parameters
- Instance 2 = DeviceNet Parameters
- Instance 3 = Starter Protection Parameters
- Instance 4 = User I/O Parameters
- Instance 5 = Miscellaneous
- Instance 6 = Drive DNet
- Instance 7 = ZIP Parameters
- Instance 8 = Basic Display
- Instance 9 = Basic Program
- Instance 10 = Advanced Program

The following instance attributes are supported for all parameter group instances

Table C.51 Parameter Group Object Instance Attributes:

Attribute ID	Access Rule	Name	Data Type
1	Get	Group Name String	SHORT_STRING
2	Get	Number of Members	UINT
3	Get	First Parameter	UINT
4	Get	Second Parameter	UINT
N	Get	Nth Parameter	UINT

The following common services are implemented for the Parameter Group Object

Table C.52 Parameter Group Object Service Common Services:

Service Code	Implemented for		Service Name
	Class	Instance	
0x0E	Yes	Yes	Get_Attribute_Single

Discrete Input Group Object — CLASS CODE 0x001D

No class attributes are supported for the Discrete Input Group Object.

A single instance of the Discrete Input Group Object is supported. It contains the following attributes

Table C.53 Discrete Input Instance Attributes:

Attribute ID	Access Rule	Name	Data Type	Value
3	Get	Number of Instances	USINT	4
4	Get	Binding	Array of UINT	List of DIP instances
6	Get/Set	Off_On_Delay	UINT	in usec
7	Get/Set	On_Off_Delay	UINT	In usec

The following common services are implemented for the Discrete Input Group Object

Table C.54 Discrete Input Group Object Common Services:

Service Code	Implemented for		Service Name
	Class	Instance	
0x0E	No	Yes	Get_Attribute_Single
0x10	No	Yes	Set_Attribute_Single

Discrete Output Group Object — CLASS CODE 0x001E

No class attributes are supported for the Discrete Output Group Object.

Two instances of the Discrete Output Group Object are supported. They contain the following attributes

Table C.55 Discrete Output Group Instance 1Attributes

Attribute ID	Access Rule	Name	Data Type	Value
3	Get	Number of Instances	USINT	10
4	Get	Binding	Array of UINT	List of DOP instances; 1, 2, 3, 4, 5, 6, 7, 8, 9, 10
6	Get/Set	Command	BOOL	0 = idle; 1 = run
104	Get/Set	Network Status Override	BOOL	0 = No Override (go to safe state) 1 = Override (run local logic)
105	Get/Set	Comm Status Override	BOOL	0 = No override (go to safe state) 1 = Override (run local logic)

Table C.56 Discrete Output Group Instance 2 Attributes

Attribute ID	Access Rule	Name	Data Type	Value
3	Get	Number of Instances	USINT	4
4	Get	Binding	Array of UINT	5, 6, 7, 8
7	Get/Set	Fault Action	BOOL	0 = Fault Value Attribute, 1 = Hold Last State
8	Get/Set	Fault Value	BOOL	0 = OFF, 1 = ON
9	Get/Set	Idle Action	BOOL	0 = Idle Value Attribute, 1 = Hold Last State
10	Get/Set	Idle Value	BOOL	0 = OFF, 1 = ON
113	Get/Set	Pr Fault Action	BOOL	0 = Pr Fault Value Attribute, 1 = Ignore
114	Get/Set	Pr Fault Value	BOOL	0 = OFF, 1 = ON

The following common services are implemented for the Discrete Output Group Object

Table C.57 Discrete Output Group Common Services:

Service Code	Implemented for		Service Name
	Class	Instance	
0x0E	No	Yes	Get_Attribute_Single
0x10	No	Yes	Set_Attribute_Single

Control Supervisor Object — CLASS CODE 0x0029

No class attributes will be supported. A single instance (instance 1) of the Control Supervisor Object will be supported

Table C.58 Instance 1 — Control Supervisor Object.

Attribute ID	Access Rule	Name	Data Type	Value
3	Get/Set	Run FWD	BOOL	These Run outputs also map to DOP instances 1 and 2.
4	Get/Set	Run REV	BOOL	
7	Get	Running FWD	BOOL	
8	Get	Running REV	BOOL	
9	Get	Ready	BOOL	
10	Get	Tripped	BOOL	
12	Get/Set	Fault Reset	BOOL	0->1 = Trip Reset
100	Get/Set	Keypad Mode	BOOL	0=Maintained; 1=Momentary
101	Get/Set	Keypad Disable	BOOL	0=Not Disabled; 1=Disabled
115	Get	Warning Status	WORD	Bits 0-1 = reserved Bit 2 = reserved Bit 3 = reserved Bit 4 = reserved Bit 5 = CP Warning Bit 6 = IO Warning Bit 7 = reserved Bit 8 = reserved Bit 9 = DN Warning Bits 10-12 = reserved Bit 13 = HW Warning Bits 14-15 = reserved
124	Get/Set	Trip Enable	WORD	Bit enumerated trip enable word
130	Get/Set	Trip Reset Mode	BOOL	0=manual; 1=auto
131	Get/Set	Trip Reset Level	USINT	0 – 100%; default = 75
150	Get/Set	High Speed Ena	BOOL	0 = Disable; 1 = Enable
151	Get	Base Enclosure	WORD	Bit 0 = IP67 Bit 1 = NEMA 4x Bits 2-15 reserved
152	Get	Base Options	WORD	Bit 0 = Output Fuse Bit 1 = Safety Monitor Bit 2 = CP Fuse Detect Bits 3-7 = Reserved Bit 8 = 10A Base Bit 9 = 25A Base Bit 10-15 = Reserved
153	Get	Wiring Options	WORD	Bit 0 = Conduit Bit 1 = Round Media Bits 2-15 = Reserved
154	Get	Starter Enclosure	WORD	Bit 0 = IP67 Bit 1 = NEMA 4x Bits 2-15 reserved
156	Get	Last PR Trip	UINT	See Parameter 61
157	Get	DB Status	WORD	Bit 0 = DB Faulted Bit 1 = DB Overtemp Warning Bit 2 = DB On Bit 3 = DB Flt Reset Inhibit Bits 4-15 = reserved
158	Get	DB Fault	WORD	Bit 0 = DB Overtemp Bit 1 = DB OverCurrent Bit 2 = DB UnderCurrent Bit 3 = DB Shorted Switch Bit 4 = DB Open Bit 5 = reserved Bit 6 = DB Bus Volt. Link Open Bit 7 = reserved Bit 8 = DB Comms Bits 9-15 = reserved

The following common services are implemented for the Control Supervisor Object

Table C.59 Control Supervisor Object Common Services:

Service Code	Implemented for		Service Name
	Class	Instance	
0x0E	No	Yes	Get_Attribute_Single
0x10	No	Yes	Set_Attribute_Single

Acknowledge Handler Object — CLASS CODE 0x002b

No class attributes are supported for the Acknowledge Handler Object.

A single instance (Instance 1) of the Acknowledge Handler Object is supported. The following instance attributes are supported

Table C.60 Acknowledge Handler Instance Attributes:

Attribute ID	Access Rule	Name	Data Type	Value
1	Get/Set	Acknowledge Timer	UINT	milliseconds
2	Get	Retry Limit	USINT	1
3	Get	COS Producing Connection Instance	UINT	4

The following common services are implemented for the Acknowledge Handler Object

Table C.61 Acknowledge Handler Common Services:

Service Code	Implemented for		Service Name
	Class	Instance	
0x0E	No	Yes	Get_Attribute_Single
0x10	No	Yes	Set_Attribute_Single

DeviceNet Interface Object — CLASS CODE 0x00B4

This vendor specific object has no class attributes.

A single instance (Instance 1) of the DeviceNet Interface Object is supported

Table C.62 DeviceNet Interface Object Instance Attribute:

Attribute ID	Access Rule	Name	Data Type	Min./Max.	Default	Description
7	Get/Set	Prod Assy Word 0	USINT		1	Defines Word 0 of Assy 120
8	Get/Set	Prod Assy Word 1	USINT		5	Defines Word 1 of Assy 120
9	Get/Set	Prod Assy Word 2	USINT		6	Defines Word 2 of Assy 120
10	Get/Set	Prod Assy Word 3	USINT		7	Defines Word 3 of Assy 120
13	Get/Set	Starter COS Mask	WORD	0 — 0xFFFF	0xFFFF	Change of state mask for starter bits
15	Get/Set	Autobaud Enable	BOOL	0 — 1	1	1 = enabled; 0 = disabled
16	Get/Set	Consumed Assy	USINT	0…185	160 (drive 164)	3, 160, 162, 164, 166, 170, 182, 187, 188
17	Get/Set	Produced Assy	USINT	100…187	161 (drive 165)	52, 120, 161, 163, 165, 167, 171, 181…190
19	Get/Set	Set To Defaults	BOOL	0…1	0	0 = No action; 1 = Reset
23	Get	I/O Produced Size		0…8		
24	Get	I/O Consumed Size	USINT	0…8		
30	Get	DNet Voltage	UINT			DeviceNet Voltage
50	Get/Set	PNB COS Mask	WORD	0…0x00FF	0	Change of state mask for PNBs
64	Get/Set	Unlock Identity Instances	USINT		0	Unlock when set to 99 hex

The following common services are implemented for the DeviceNet Interface Object

Table C.63 DeviceNet Interface Object Common Services:

Service Code	Implemented for		Service Name
	Class	Instance	
0x0E	No	Yes	Get_Attribute_Single
0x10	No	Yes	Set_Attribute_Single

Group Motor Installations

Application of ArmorStart® Controllers in Group Installation

The following is a method of applying ArmorStart controllers using group motor installation rules as defined in the National Electric Code (NEC 2005) and Electrical Standard for Industrial Machinery (NFPA 79-2002).

1. List motors of the group in descending order of motor nameplate full load current.
2. Select disconnect means.
   - **a.** Sum all locked rotor currents of motors that can be started simultaneously using NEC Table 430.251.
   - **b.** Add to that value all the full load currents of any other motors or loads that can be operating at the same time as the motors that start simultaneously, using NEC Table 430.250.
   - **c.** Use the total current from a and b above to get an equivalent horsepower value from Table 430.251. That value is the size of the disconnect means in horsepower. (NEC 430.110)
3. Select fuse or circuit breaker protection: Select fuse or circuit breaker size for the largest motor per NEC Table 430.52 and add that ampere value to the total of the full load currents of the rest of the motors. The final value is the fuse or circuit breaker size required. (NEC 430.53C)
4. Select wire: Ampacity of wire feeding a group of motors is not less than 125% of the full-load current rating of the highest rated motor plus the sum of the full load current ratings of all the motors in the group. (NEC 430.24)
5. The code states that any taps supplying a single motor shall have an ampacity not less than one third the ampacity of the branch circuit conductors. (NEC 430.53D) The branch circuit conductors can be defined as the conductors on the load side of the fuse block or circuit breaker. This requirement actually defines the size of the group of motors. For example, if the wire from the fuses or circuit breaker is AWG #8 with rated ampacity of 50 A, the smallest wire you can use as a tap and to the motors is AWG #14 with an ampacity of 20 A. (NEC Table 310.16 for 75° C wire) Note that the Bulletin 280 ArmorStart controllers will not accept wire greater than #10 wires at its input terminal blocks. The ArmorStart cabling to the motor is UL Listed for the controller's Hp and is supplied with the ArmorStart controller or as an accessory when longer lengths are required.

Group motor installations using the ArmorStart in distributed control applications will be largely dictated by the required motor Hp, their locations and the practical concerns of wire-cable routing on the equipment. It should be noted that Group motor installation are designed to use the actual motor Hp and current ratings in NEC Table 430.250 and not the ArmorStart controller's rating. This allows for the possible standardization of ArmorStart controllers in an installation. An application can be designed using 5 Hp controllers for all motors between say 5 and 2 Hp and 1 Hp controllers for motors 1 Hp and less without having to oversize the wiring and short circuit protection that would result from using the larger ArmorStart controller's rating.

In the case of using the Bulletin 284 VFD-ArmorStart the actual full-load current of the motor needs to multiplied by the ratio of the drive's ratio of rated input current to output current to arrive at the actual full-load current. For example, in the case of a 2 Hp VFD-ArmorStart being used to control a 1 Hp 2.1 A @ 460 V motor, the full-load amperes to be used for the Group motor calculation would be the 2 Hp VFD-ArmorStart's (Rated Input Current / Rated Output Current) x 1 Hp motor's rated full-load current; (5.7 A / 4.0 A)2.1 A = 3.0 A.

The following is a group motor example calculation for a 460 V distributed application that requires two 10 Hp DOL-ArmorStart controlling 10 Hp and 5 Hp motors and four 2 Hp VFD-ArmorStarts controlling one 2 Hp motor and three 1 Hp motors. From NEC Table 430.250 the full-load current of the respective motors are:

Motor Hp	Motor FLC (A)
10	14
5	7.6
2	3.4
1	2.1
1	2.1
1	2.1

To design the motor circuit using a time delay fuse from NEC Table 430.52 to the rules of NEC 430.53C we start with the largest motor, 10 Hp, and calculate 14 A x 175% = 24.5 A. To this we add the FLC of the 5 Hp motor, 7.6 A, plus the other calculated drive currents for the motors controlled by the VFD-ArmorStarts. The calculated drive currents are given in the following Table:

Motor Hp	Motor FLC (A)	Drive Input to Output Current Ratio (See ArmorStart Users Manual - Appendix A)	Calculated Drive Current (A)
2	3.4	5.57 A/4.0 A = 1.39	3.4 x 1.39 = 4.72 A
1	2.1	3.45 A/2.3 A = 1.5	2.1 x 1.5 = 3.15 A
1	2.1	3.45 A/2.3 A = 1.5	2.1 x 1.5 = 3.15 A
1	2.1	3.45 A/2.3 A = 1.5	2.1 x 1.5 = 3.15 A

The total current for the fuse ampacity is calculated in the following Table:

Motor Hp	Motor FLC (A)	TD Fuse Current (A)
10	14	24.5 A
5	7.6	7.6 A
2	3.4	4.72 A
1	2.1	3.15 A
1	2.1	3.15 A
1	2.1	3.15 A
Total Fuse Current		46.4 A

Therefore the standard fuse available not exceeding 46.4 A is a 40 A fuse.

To calculate the wire ampacity and therefore the size of the motor branch conductor we use NEC 430.24 and calculate the sum of 125% of the largest motor's FLC plus the FLC of the other motors in the group. The conductor ampacity calculation is given in the following Table:

Motor Hp	Motor FLC (A)	Wire Current (A)
10	14	14A x 1.25 =17.5A
5	7.6	7.6A
2	3.4	4.89 A
1	2.1	3.15 A
1	2.1	3.15 A
1	2.1	3.15 A
Total Fuse Current		39.4 A

From NEC Table 310.16 we need to use 8 AWG for the motor branch circuit. Per NEC 430.28 the individual motor tap conductors can be sized down to 1/3 the ampacity of the trunk but not less than 125% of the specific motor's FLC on the tap. This reduction is further conditionally based on the tap being not more than 25 feet. NFPA 79, 7.2.10.4 and Table 7.2.10.4 restrict the size reduction by the size of the branch circuit fuse size and tap conductor size. For the above case we have used a 40 A time-delay fuse. NFPA 79, Table 7.2.10.4 indicates that the smallest tap conductor can be 12 AWG. NEC Table 310.16 for wire ampacity allows 12 AWG (25 A) to be used in all taps for this application. See the final Group motor circuit design in the following figure:

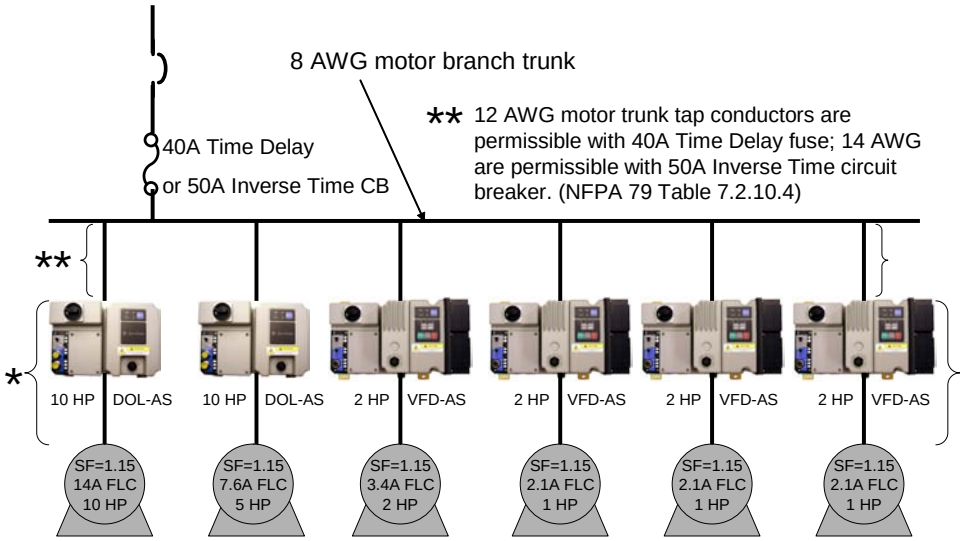

* Note, the ArmorStart and motor cable are UL Listed together and supplied by Rockwell Automation.

If the Group motor design were carried out with the intent to use an inverse-time circuit breaker from NEC Table 430.52 to the rules of NEC 430.53C, we start with the largest motor, 10 Hp, and calculate 14A x 250% = 35 A to this we add the FLC of the 5 Hp motor, 7.6 A, plus the other calculated drive currents for the motors controlled by the VFD-ArmorStarts. The calculated drive currents are given in the following table:

Motor Hp	Motor FLC (A)	Inverse-Time CB Current (A)
10	14	35 A
5	7.6	7.6 A
2	3.4	4.89 A
1	2.1	3.15 A
1	2.1	3.15 A
1	2.1	3.15 A
Total Fuse Current		56.94 A

Therefore for the standard inverse-time circuit breaker available not exceeding 56.94 A we need to use a 50 A inverse-time circuit breaker. This design will also allow the use of 8 AWG for the motor branch circuit. Continuing than and applying NEC 430.28 the individual motor tap conductors can be sized down to 1/3 the ampacity of the trunk and following the restrictions in NFPA 79, 7.2.10.4 and Table 7.2.10.4 for this case where we have used a 50 A inverse-time circuit breaker. NFPA 79, Table 7.2.10.4 indicates that the smallest tap conductor can now be 14 AWG. See the above figure for this Group motor circuit design.

The above method instructs one on applying ArmorStart controllers using group motor installation rules. Because of the ArmorStart's capability, rating and Listing this method provides the minimum branch circuit wire and SCPD protection size that can be used. The Armor Start has been evaluated and tested for group motor installations when being feed by a power source having 65,000 Amps available fault current. The ArmorStart is not a listed combination motor controller, however, but is Listed as Industrial Control Equipment per UL 508 for group motor installations per NFPA 79. Under this Listing the NEC and actually NFPA 79 puts an upper bound on the SCPD to be used. That upper bound is dictated by the maximum ratings in Table 7.2.10.4.

The rules and allowances for sizing of the over current protection for NFPA 79 motor groups is covered by 7.2.10.4, Table 7.2.10.4 and Table 13.5.6. These rules in Tables 7.2.10.4 and 13.5.6 are intended to limit the maximum SCPD for a group. Therefore each ArmorStart controller with its factory-supplied output motor cable is suitable for single-motor or multiple-motor group installations on industrial machinery when installed according to NFPA 79, 2002. The controller and output motor cable have been evaluated as a single system. The maximum over current device rating or setting is limited to the value in Table D.1 for the smallest user-supplied input line conductor, by the controller's maximum rating, or as allowed by the UL Certificate of Compliances 012607-E3125, E96956, and E207834 for the combined use of ArmorStart and ArmorConnect components.

The Certificate of Compliances allow the ArmorStart Distributed Motor Controllers Models 280*-*10*, 281*-*10* and 284*-*10* respectively to be used with ArmorConnect input cable media 280*-PWRM22*-M*, 280S-PWRM22*-M* Cable Assembly branch circuit taps, and 280*-M22*-M1 ArmorConnet Panel Mounting Fittings when the group motor branch circuits are protected with a maximum 40 A non-time delay or a 20 A time delay, Class CC, T or F fuse.

These ArmorStart and ArmorConnect product UL Certification of Compliances effectively extend Table D.1 to allow ArmorConnect branch circuit taps and mounting fittings constructed with 16 AWG conductor sized to be connected to appropriate ArmorStart motor controllers. See Table D.1.

Table D.1 Extended NFPA 79, Table 7.210.4, Relationship Between Conductor Size and Maximum Rating or Setting of Short-Circuit Protective Devices for Power Circuits

	Max. Ratings	
Conductor Size (AWG)	Non-Time Delay Fuse or Inverse Time Circuit Breaker ❶ (amperes)	Time Delay or Dual Element Fuse (amperes)
16 ❷	40 ❸	20 ❹
14	60	30
12	80	40
10	100	50
8	150	80
6	200	100
4	250	125

❶ For 16 AWG conductors the branch circuit breaker must be marked for use the 16 AWG wire, NFPA 79, 12.6.1.1.

❷ The UL Certificate of Compliance for the ArmorStart Distributed Motor Controllers models 280*-*10*, 281*-*10*, 284*-*10*; and ArmorConnect input cable media 280*-M22*-M*, 280S-PWRM22*-M* cable assembly branch circuit taps, and 280*-M22*-M1 ArmorConnect panel mounting fittings allows 16 AWG conductors to be used when part of ArmorStart and ArmorConnect components.

❸ The 280*-PWRM22*-M* ArmorConnect cable assembly taps and 280*-22*-M1 panel mounted fittings with 16 AWG conductors are suitably protected when protected in the branch circuit by a 40A non-time delay fuse.

❹ The 280*-PWRM22*-M* ArmorConnect Cable Assembly taps and 280*-22*-M1 Panel Mounted Fittings with 16 AWG conductors are suitably protected when protected in the branch circuit by a 20A time delay fuse.

The Listed ArmorStart motor controllers with their factory supplied motor cable carries the marked maximum ratings shown in the following table.

Max. Ratings				
Voltage	480Y/277	480	600Y/347	600
Sym. Amps RMS	65 kA	65 kA	30 kA	30 kA
Circuit Breaker	100 A	100 A	100 A	-
Fuse	100 A	100 A	100 A	60 A ❶
ArmorConnect ❷	60 A ❶	60 A ❶	60 A ❶	60 A ❶

❶ Class J, CC, and T fuses only.

❷ ArmorConnect power media and tees may only be used with fuses.

To summarize, the design of the ArmorStart controllers in group motor applications is to be carried out as described above. The user supplied line side SCPD and wiring has to meet the minimum requirements determined above, however, the SCPD is required to protect the ArmorStart controller's associated line side wiring only and can be increased to the values allowed in the maximum ratings tables above. Because the maximum line side conductor for the ArmorStart is #10 AWG this is the maximum tap wire or daisy-chain wiring that can be used to take advantage of the ArmorStart's maximum input ratings.

A benefit to the ArmorStart rating and the above design process using NFPA rules is that the industrial equipment that utilizes several group motor installations on different branch circuits can standardize the size of the SCPD and the branch wiring for all the branch circuits of the installation as long as they do not exceed the maximum ratings of Table D.1as extended by the UL Certificate of Compliances for combined ArmorStart and ArmorConnect installations, which ever is less.

Safety I/O Module and TÜV Requirements

ArmorStart Safety-Related Parts

Each ArmorStart Safety Distributed motor controller is intended to be combined with the 1732DS-IB8XOBV4 safety I/O module to form a subsystem that is part of the overall machine stop function. The motor controllers are connected to the safety I/O module through specified cable assemblies. The combination of one of these controllers, the safety module, and the specified interconnecting cables are referred to as the ArmorStart Safety-Related Parts. The part numbers for each of these components is specified below. The combination of these components is shown in Figure E.1. The safety I/O module and PLC program must be configured as outlined. See configuration of Safety I/O Module and PLC program.

Table E.1 Safety-Related Parts

Catalog Number	Description
280…S* * - denotes safety version of Bulletin 280	Bulletin 280 Distributed Motor Controller – controller is full-voltage, non-reversing
281…S* * - denotes safety version of Bulletin 280	Bulletin 281 Distributed Motor Controller – controller is full-voltage, reversing
284…S* * - denotes safety version of Bulletin 280	Bulletin 281 Distributed Motor Controller – controller is variable-frequency AC drive
1732DS-IB8XOBV4	Guard I/O DeviceNet Safety Module
889D-F4HJDM-*, 889D-F4AEDM-* or equivalent * - denotes length	• SM cable assembly - Interconnecting cable assembly between safety module input and ArmorStart controller connector labeled “SM”. Assembly provides contactor position feedback. • A1/A2 cable assembly - Interconnecting cable assembly between safety module output and ArmorStart controller connector labeled “A1/A2”. Assembly provides output contactor coil power and controller power supply.

ArmorBlock® Guard I/O™ Modules

	Description	Cat. No.
	ArmorBlock Guard I/O provides all the advantages of traditional distributed I/O for safety systems, but has an IP67 package that can be mounted directly on your machine. On-machine safety I/O reduces wiring time and startup costs for safety controller applications by eliminating electrical boxes and simplifying cable installation. The ArmorBlock family provides industrially hardened I/O blocks that you can mount directly on equipment near sensors or actuators. Wiring the I/O to the sensors and actuators is easy using pre-wired quick disconnect cables. You can use Guard I/O with any safety controller that communicates on DeviceNet using CIP Safety for the control and monitoring of safety circuits. Guard I/O detects circuit failures at each I/O point while providing detailed diagnostics directly to the controller. With CIP Safety, you can easily integrate safety and standard control systems by using safety and standard messages on the same wire. The 1732DS ArmorBlock Guard I/O family consists of 24V DC digital I/O modules that communicate on DeviceNet networks. The I/O connectors are sealed M12 micro style while the network and auxiliary power connectors are sealed mini style. Plus, the ArmorBlock Guard I/O uses the same input and output M12 pin configuration as standard ArmorBlock and Maxum.	1732DS-IB8XOBv4

Specifications

Electrical	
Current Consumption	85 mA @ 24V DC
I/O Operating Voltage Range	19.2…28.8V DC (24V DC +/- 20%)
Digital Inputs	
Number of Inputs	8 safety single-channel or 4 safety dual-channel
Input Type	current sinking
Voltage, On-State Input, Min.	11V DC
Voltage, On-State Input, Max.	5V DC
Current, On-State Input, Min.	3.3 mA
Voltage, On-State Input, Min.	11V DC
Digital Outputs	
Number of Outputs	4 safety solid-state
Output Type	dual-channel, current sourcing/current sinking pair
Short Circuit Protection	Yes
Standard Pulse Test Outputs	
Number of Pulse Test Sources	8
Pulse Test Output Current	0.7 A per point
Short Circuit Protection	Yes
Mechanical	
Approximate Dimensions	179 x 70 x 68.7 mm (7.05 x 2.76 x 2.71 in.)
Weight	600 g (1.2 lb)
Environmental	
Operating Temperature	-20…+60 °C (-4…+140 °F)
Relative Humidity	10…95%, non-condensing
Vibration	0.76 mm @ 10…500 Hz
Shock, Operating	30 g
Enclosure Type Rating	IP67
Certifications	UL, CE, C-Tick, CSA, UL NRGF, ODVA Conformance, TÜV Certified for fuctional safety up to SIL 3, Cat. 4

Micro Connector Pin Assignments

Face View Pinout				Female
Input Configuration		Output Configuration		
Pin	Signal	Pin	Signal	
1	Test Output n+1	1	Output +24V DC Power	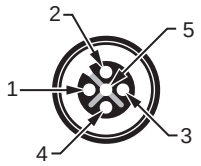
2	Safe Input n+1	2	Output n+1 (sinking)	
3	Input Common	3	Output Power Common	
4	Safe Input n	4	Output n (sourcing)	
5	Test Output n	5	Output Power Common	

Mini Connector Pin Assignments

Face View Pinout		Male	Female
Pin	Signal		
1	Drain		
2	V+ (Red)		
3	V- (Black)		
4	CAN_H (White)		
5	CAN_L (Blue)		

Power Configuration Pin Assignments

Face View Pinout		Male
Pin	Signal	
1	Output +24V DC Power (Red)	
2	Input +24V DC Power (Green)	
3	Input Power Common (White)	
4	Output Power Common (Black)	

ArmorBlock Guard I/O Recommended Compatible Cables and Connectors

Description		Cat. No.
	DC Micro (M12) Male Cordset	889D-F4HJ-❶
	DC Micro Style Patchcord	889D-F4HJDM-❶
	M12 Terminal Chamber, Straight Male	871A-TS4-DM
	M12 Terminal Chamber, Right Angle Male	871A-TR4-DM

❶ Replace symbol with 1 (1 m), 2 (2 m), 5 (5 m), or 10 (10 m) for standard cable length.

Figure E.1

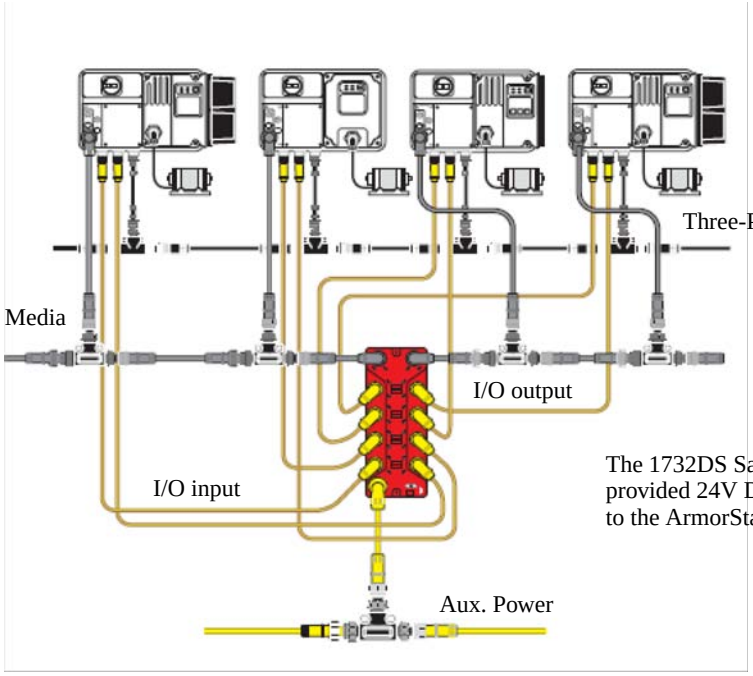

The 1732DS Safety I/O module inputs will monitor the status of the safety-rated contactors inside the ArmorStart -SM safety monitor input.

Safety Function Definition

The safety function is an uncontrolled stop. The uncontrolled stop is executed by removing the ArmorStart safety controller output voltage in response to a DeviceNet Safety network command.

Limitations of the Safety-Related Parts

The user must provide other components to implement the overall machine stop function. Example components are the DeviceNet safety network, a safety PLC, and a safety input module.

Detection of the contactor state is provided so that a Category 4 architecture can be implemented for the overall machine stop function. The user must provide a safety PLC and program to process the “SM” feedback as required by Category 4. See configuration of safety I/O module and Safety PLC Program.

Configuration of the 1732DS-IBXOBV4 Safety I/O Module and PLC Program

The safety module must be configured as follows:

Configure the output that is connected to the I/O output cable assembly for:

- Dual (bipolar mode)
- Safety Pulse Test

Configure the input that is connected to the I/O Input cable assembly as follows:

- Channel = Single
- Mode = Pulsed Test Input from test output X
- Source = Pulsed output from X

ArmorStart Controller - none required

Safety PLC Program – the program must:

- Force the output contactors to the open state when a safety-related stop is demanded.
- Force the output contactors to remain in the open state if the SM feedback is open after a safety-related stop is executed (see Note 1 and Note 2).

Note 1: The program must inhibit the contactor closure to satisfy safety category 4 of 13849-1.

Note 2: The SM feedback logic should be implemented only after a safety-related stop for the Bulletin 280/281 controllers. It should be ignored during normal operation. One of the series contactors is used for the normal stop/start function for these controllers. Therefore, a malfunctioning contactor circuit cannot be distinguished from a normal running state.

Refer to Publication SAFETY-AT018*, for programming examples.

Safety-Related Specifications

Component Response Time

Component	Response Time (ms)
1732DS-IB8XOBV4	See Publication 1732DS-IN001*
Bulletin 280	20…40
Bulletin 281	20…40
Bulletin 284	8…12

Probability of Dangerous Failure per hour and $MTTF_d$ for Uncontrolled Stop

ArmorStart Safety Controller used in Combination of ArmorStart Safety-Related Parts	MTTFd (years)	Average probability of dangerous failure per hour (1/h)
Bulletin 280…	100	5.7E-9
Bulletin 281…	100	6.0E-9
Bulletin 284…	100	6.0E-9

Maintenance and Internal Part Replacement

The ArmorStart Safety controllers do not have any internal maintenance procedures or internal replacement parts. Refer to the 1732DS-IB8XOBV4 safety module documentation for maintenance requirements pertaining to it. It is recommended that the operation of the 1732DS-IB8XOBV4 safety module and the ArmorStart output contactor circuits be verified once per year by performing the contactor circuit verification procedure. The contactor circuit verification procedure must be performed on an ArmorStart Safety controller that has experienced an output short-circuit fault prior to placing the controller back into service.

Contactor Circuit Verification Procedure

Initiate a stop from the safety PLC to the 1732DS-IB8XOBV4

- Verify that the ArmorStart controller output motor voltage is removed.
- Verify that the SM feedback to the safety PLC transitions to the open state.

Troubleshooting

1732DS-IB8XOBV4 Safety Module

Refer to 1732DS-IB8XOBV4 documentation for trouble shooting instructions.

ArmorStart Safety Bulletin 280/281/284 Distributed Motor Controllers Safety Circuit Troubleshooting

Symptom	ArmorStart Controller LED Status Indication			Probable Cause	Recommended Action
	Power	Fault	Run		
Motor will not start	Off	Off	Off	1. The disconnect switch of the ArmorStart controller is open. 2. 24 VDC not supplied to A1 and A2 at A1/A2 connector because cable or connections are defective. 3. 1732DS-IB8XOBV4 not supplying 24 VDC to A1 and A2 pins of A1/A2 cable.	1. Check disconnect switch. 2. Verify cable and connections. 3. Refer to IN PWR/OUT PWR Indicators in 1732DS-IB8XOBV4 manual.
	Off	Flashing	Off	There is an ArmorStart controller fault.	Refer to ArmorStart Manual for controller fault.
	On	Off	Off	After non-safety stop① 1. The controller is not receiving a RUN command. After safety stop② 1. The controller is not receiving a RUN command. 2. SM cable connections (SM1, SM2) open. 3. SM feedback is open inside control module. 4. 1732DS-IB8XOBV4 is reporting open SM feedback from the IN0...INn inputs.	After non-safety stop① 1. Check RUN command source. After safety stop② 1. Check RUN command source. 2. Check SM cable and connections. 3. Check SM feedback inside control module. 4. Refer to I/O Indicators in 1732DS-IB8XOBV4 manual.
	On	Flashing	Off	ArmorStart controller fault is inhibiting ArmorStart controller start function.	Refer to ArmorStart Manual for controller fault.
	On	Off	On	1. Three-phase power is not being supplied to controller (Bulletin 280/281 controllers). 2. 24 VDC not supplied to P and M at A1/A2 connector because cable or connections are defective. 3. 1732DS-IB8XOBV4 OUT0...OUTn outputs are not supplying 24 VDC to pins P and M of A1/A2 cable assembly.	1. Verify 3-phase voltage at ArmorStart controller input. 2. Verify cable and connections. 3. Refer to I/O Indicators in 1732DS-IB8XOBV4 manual.

① Non-safety stop – The 1732DS-IB8XOBV4 does not remove 24V DC from P and M of A1/A2 when a non-safety stop is executed. Restarting the controller after a non-safety stop is not inhibited by the safety circuit.

② Safety stop – The 1732DS-IB8XOBV4 removes 24V DC from P and M of A1/A2 when a safety stop is executed. This opens both contactors. Restarting the controller stop is inhibited if the SM feedback is open. The program in the safety controller does not permit the 1732DS-IB8XOBV4 to apply 24V DC to P and M in the A1/A2 cable.

Notes:

Accessories

Table F.1 DeviceNet™ Media ❶

Description		Length m (ft)	Cat. No.
	KwikLink pigtail drops are Insulation Displacement Connector (IDC) with integral Class 1 round cables for interfacing devices or power supplies to flat cable		Sealed
		1 m (3.3)	1485P-P1E4-B1-N5
		2 m (6.5)	1485P-P1E4-B2-N5
		3 m (9.8)	1485P-P1E4-B3-N5
		6 m (19.8)	1485P-P1E4-B6-N5
	DeviceNet Mini- T-Port Tap	Right Keyway Left Keyway	1485P-P1N5-MN5NF 1485P-P1N5-MN5KM
	Gray PVC Thin Cable	**Connector**	**Cat. No.**
		Mini Straight Female Mini Straight Male	1485G-P❷N5-M5
		Mini Straight Female Mini Right Angle Male	1485G-P❷W5-N5
		Mini Right Angle Female Mini Straight Male	1485G-P❷M5-Z5
		Mini Right Angle Female Mini Straight Male	1485G-P❷W5-Z5
	Thick Cable	Mini Straight Female Mini Straight Male	1485C-P❸N5-M5
		Mini Straight Female Mini Right Angle Male	1485C-P❸W5-N5
		Mini Right Angle Female Mini Straight Male	1485C-P❸M5-Z5
		Mini Right Angle Female Mini Straight Male	1485C-P❸W5-Z5
		Length m (ft)	**Cat. No.**
	DeviceNet Configuration Terminal — Used to interface with objects on a DeviceNet network. Includes 1 m communications cable.	1 m (3.3)	193-DNCT
	Communication cable, color-coded bare leads	1 m (3.3)	193-CB1
	Communication cable, microconnector (male)	1 m (3.3)	193-CM1
	Panel Mount Adapter/Door Mount Bezel Kit	—	193-DNCT-BZ1

❶ See publication M116-CA001A-EN-P for complete cable selection information.

❷ Replace symbol with desired length in meters (Example: 1485G-P1N5-M5 for a 1 m cable). Standard cable lengths: 1 m, 2 m, 3 m, 4 m, 5 m, and 6 m.

❸ Replace symbol with desired length in meters (Example: 1485C-P1N5-M5 for a 1 m cable). Standard cable lengths: 1 m, 2 m, 3 m, 4 m, 5 m, 6 m, 8 m, 10 m, 12 m, 18 m, 24 m, and 30 m.

NOTE: Stainless steel versions may be ordered by adding an “S” to the cat. no. (Example: 1485CS-P1N5-M5)

Table F.2 Sensor Media ❶

Description	ArmorStart® I/O Connection	Pin Count	Connector	Cat. No.
DC Micro Patchcord	Input	5-Pin	Straight Female Straight Male	889D-F4ACDM-❷
			Straight Female Right Angle Male	889D-F4AACDE-❷
DC Micro V-Cable	Input	5-pin	Straight Female	879D-F4ACDM-❷
			Right Angle Male	879D-R4ACM-❷
AC Micro Patchcord	Output	3-pin	Straight Female Straight Male	889R-F3AERM-❷
			Straight Female Right Angle Male	899R-F3AERE-❷

❶ See Publication M116-CA001A-EN-P for complete cable selection information.

❷ Replace symbol with desired length in meters (Example: 889D-F4ACDM-1 for a 1 m cable). Standard cable lengths: 1 m, 2 m, 5 m, and 10 m.

Table F.3 Sealing Caps

Description	For Use With	Cat. No.
Plastic Sealing Cap (M12) ❸	Input I/O Connection	1485A-M12
Aluminum Sealing Cap (M12) ❸	Output I/O Connection	889A-RMCAP
Stainless Steel Sealing Cap (M12) ❹	Input I/O Connection	1485AS-C3
Stainless Steel Sealing Cap (M12) ❹	Output I/O Connection	889AS-RMCAP
Aluminum Sealing Cap (M22) ❺	Dynamic Brake Receptacle	1485A-C1

❸ To achieve IP 67 rating, sealing caps must be installed on all unused I/O connections.

❹ To achieve IP 69k rating, sealing caps must be installed on all unused I/O connections.

❺ To achieve IP 67 rating, sealing caps must be installed if Dynamic Brake option is not used.

Table F.4 Locking Clips

Description	Package QTY	Cat. No.
The clam shell design clips over the ArmorStart motor connector and motor cable to limit customer access.	10	280-MTR22-LC
	10	280-MTR35-LC

Table F.5 Locking Tag

	Description	Cat. No.
	Padlock attachment to the lockable handles, up to three padlocks 4…8 mm (5/16 in.) shackle.	140M-C-M3

Table F.6 IP67 Dynamic Brake Resistor

						Application Type 1		Application Type 2	
Drive and Motor Size kW	**Part Number**	**Resistance Ohms ± 5%**	**Continuous Power kW**	**Max Energy kJ**	**Max Braking Torque % of Motor**	**Braking Torque % of Motor**	**Duty Cycle %**	**Braking Torque % of Motor**	**Duty Cycle %**
400-480 Volt AC Input Drives									
0.37 (0.5)	284R-360P500-M*	360	0.086	17	305%	100%	47%	150%	31%
0.75 (1)	284R-360P500-M*	360	0.086	17	220%	100%	23%	150%	15%
1.5 (2)	284R-360P500-M*	360	0.086	17	110%	100%	12%	110%	11%
2.2 (3)	284R-120P1K2-M*	120	0.26	52	197%	100%	24%	150%	16%
4 (5)	284R-120P1K2-M*	120	0.26	52	124%	100%	13%	124%	10%

* - Indicates cable length (0.5 m or 1.0 m).

Note: Always check the resistor ohms against minimum resistance for drive being used.

Note: Duty Cycle listed is based on full speed to zero speed deceleration. For constance regen at full speed, duty cycle capability is half of what is listed. Application Type 1 represents maximum capability up to 100% braking torque where possible. Application Type 2 represents more than 100% braking torque where possible, up to a maximum of 150%.

Figure F.1 Dynamic Brake Resistor Approximate Dimensions

Dimensions are not intended to be used for manufacturing purposes.

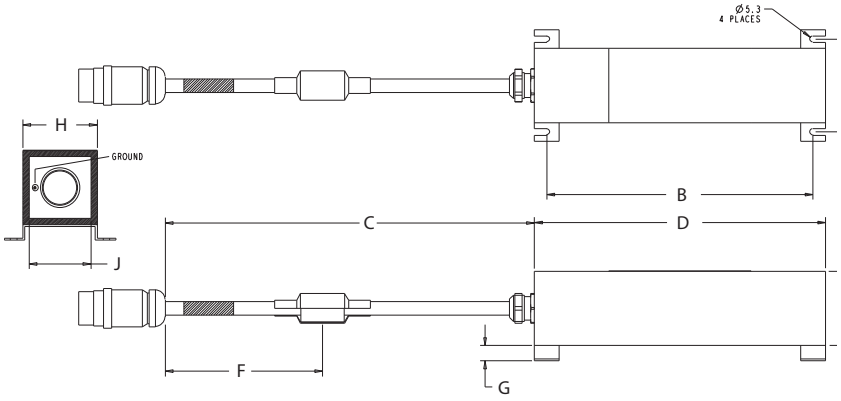

Cat No.	A mm (in.)	B mm (in.)	C	D mm (in.)	E mm (in.)	F mm (in.)	G mm (in.)	H mm (in.)	J mm (in.)
284R-360P500	89 ± 3 (3.5 ± 0.12)	215 ± 5 (8.46 ± 0.2)	*	235 ± 5 (9.25 ± 0.2)	60 ± 2 (2.36 ± 0.08)	127 (5)	12.54 (0.49)	60 ± 2 (2.36 ± 0.08)	50 ± 1.5 (1.97 ± 0.06)
284R120P1K2		420 ± 5 (16.54 ± 0.2)		440 ± 5 (17.32 ± 0.2)					

* Length is user-selectable based on the suffix added to the catalog number. For a length of 500±10mm, add **-M05** to the end of the catalog number. For a length of 1000±10mm, add **-M1** to the end of the catalog number.

Notes:

Renewal Parts

Figure G.1 Bulletin 280/281 Safety Control Module Renewal Part Catalog Structure

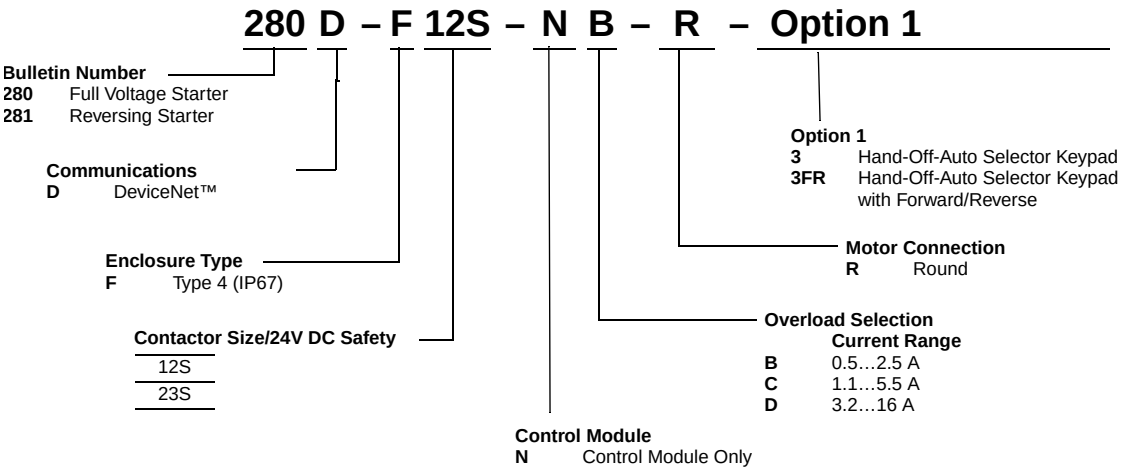

Control Module Renewal Part Product Selection

Table G.1 Full Voltage Starters — IP67/NEMA Type 4, Up to 460V AC

Current Rating (A)	kW		Hp			Cat. No.
	230V AC 50 Hz	400V AC 50 Hz	200V AC 60 Hz	230V AC 60 Hz	460V AC 60 Hz	24V DC
0.5…2.5	0.37	0.75	0.5	0.5	1	280D-F12S-NB-R
1.1…5.5	1.1	2.2	1	1	3	280D-F12S-NC-R
3.2…16	4	7.5	3	5	10	280D-F23S-ND-R

Table G.2 Reversing Starters — IP67/NEMA Type 4, Up to 460V AC

Current Rating (A)	kW		Hp			Cat. No.
	230V AC 50 Hz	400V AC 50 Hz	200V AC 60 Hz	230V AC 60 Hz	460V AC 60 Hz	24V DC
0.5…2.5	0.37	0.75	0.5	0.5	1	281D-F12S-NB-R
1.1…5.5	1.1	2.2	1	1	3	281D-F12S-NC-R
3.2…16	4	7.5	3	5	10	281D-F23S-ND-R

Figure G.2 Bulletin 280 Safety Base Module Renewal Part Catalog Structure

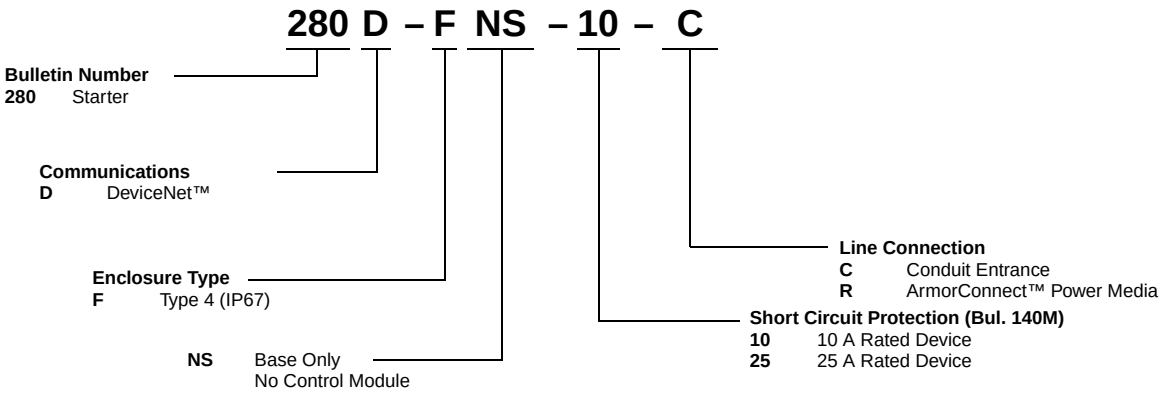

Base Module Renewal Part Product Selection

Table G.3 Bul. 280 Full Voltage Starters & Bul. 281 Reversing Starters — IP67/NEMA Type 4, Up to 460V AC with Conduit Entrance

Current Rating (A)	kW		Hp			Cat. No.
	230V AC 50 Hz	400V AC 50 Hz	200V AC 60 Hz	230V AC 60 Hz	460V AC 60 Hz	
0.5…2.5	0.37	0.75	0.5	0.5	1	280D-FNS-10-C
1.1…5.5	1.1	2.2	1	1	3	280D-FNS-10-C
3.2…16	4	7.5	3	5	10	280D-FNS-25-C

Table G.4 Bul. 280 Full Voltage Starters & Bul. 281 Reversing Starters — IP67/NEMA Type 4, Up to 460V AC with ArmorConnect Connectivity

Current Rating (A)	kW		Hp			Cat. No.
	230V AC 50 Hz	400V AC 50 Hz	200V AC 60 Hz	230V AC 60 Hz	460V AC 60 Hz	
0.5…2.5	0.37	0.75	0.5	0.5	1	280D-FNS-10-R
1.1…5.5	1.1	2.2	1	1	3	280D-FNS-10-R
3.2…16	4	7.5	3	5	10	280D-FNS-25-R

Table G.5 Motor Cables

Description	Current Rating (A)	Cable Rating	Length m (ft)	Cat. No.
90° M22 Motor Cordset	0.5…2.5 1.1…5.5	IP67/NEMA Type 4	3 (9.8)	280-MTRM22-M3
			6 (19.6)	280-MTR22-M6
			14 (45.9)	280-MTR22-M14
90° M35 Motor Cordset	3.2…16	IP67/NEMA Type 4	3 (9.8)	280-MTRM35-M3
			6 (19.6)	280-MTR35-M6
			14 (45.9)	280-MTR35-M14

Figure G.3 Bulletin 284 Safety Control Module Renewal Part Catalog Structure

284 D – F V D2P3 S – N – R – Option 1 – Option 2 – Option 3

Bulletin Number

Communications
D DeviceNet™

Enclosure Type
F Type 4 (IP67)

Torque Performance Mode
V Sensorless Vector Control, Volts per Hz

Output Current

Control Module
N Control Module Only

Control Voltage
S 24V DC (Safety)

Option 3
EMI EMI Filter

Option 2
DB1 DB Brake Connector for IP67 Dynamic Brake Resistor
SB Source Brake Connector

Option 1
3 Hand-Off-Auto Selector Keypad with Jog Function
Blank Status Only

Motor Media Type
R Round

Code	Output Current [A]	kW	Hp
480V Drive			
D1P4	1.4	0.4	0.5
D2P3	2.3	0.75	1
D4P0	4	1.5	2
D6P0	6	2.2	3
D7P0	7.6	4	5

Table G.6 Bulletin 284 Control Module with Sensorless Vector Performance, IP67/NEMA 4, Up to 480V

Input Voltage	kW	Hp	Output Current	24 V DC Control Voltage
480V 50/60 Hz 3-Phase	0.4	0.5	1.4 A	284D-FVD1P4S-N-R-DB1-SB
	0.75	1.0	2.3 A	284D-FVD2P3S-N-R-DB1-SB
	1.5	2.0	4.0 A	284D-FVD4P0S-N-R-DB1-SB
	2.2	3.0	6.0 A	284D-FVD6P0S-N-R-DB1-SB
	3.0	5.0	7.6 A	284D-FVD7P6S-N-R-DB1-SB

Figure G.4 Bulletin 284 Safety Base Module Renewal Part Catalog Structure

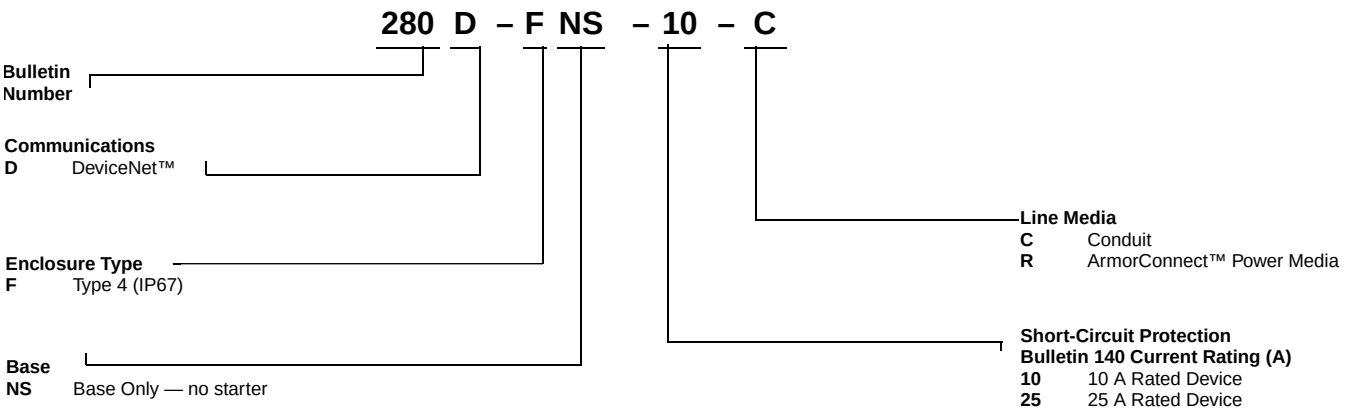

Base Module Renewal Part Product Selection

Table G.7 Bulletin 284 Base Module Renewal Part, IP67/NEMA 4, Up to 480V AC With Conduit Entrance

Input Voltage	kW	Hp	Output Current	Cat. No.
380…480V 50/60 Hz 3-Phase	0.4…2.2	0.5…3.0	1.4…4.0 A	280D-FNS-10-C
	3.0	5.0	6.0…7.6 A	280D-FNS-25-C

Table G.8 Bulletin 284 Base Module Renewal Part, IP67/NEMA 4, Up to 480V AC with ArmorConnect™ Connectivity

Input Voltage	kW	Hp	Output Current	Cat. No.
380…480V 50/60 Hz 3-Phase	0.4…2.2	0.5…3.0	1.4…4.0 A	280D-FNS-10-R
	3.0	5.0	6.0…7.6 A	280D-FNS-25-R

Table G.9 Motor Cables

Description	Cable Rating	Length m (ft)	Cat. No.
90° M22 Motor Cordset	IP67/NEMA Type 4	3 m (9.8)	280-MTR22-M3
		6 m (19.6)	280-MTR22-M6
		14 m (45.9)	280-MTR22-M14
90° M22 Motor Cordset (Shielded)	IP67/NEMA Type 4	3 m (9.8)	284-MTRS22-M3
		6 m (19.6)	284-MTRS22-M6
		14 m (45.9)	284-MTRS22-M14

Table G.10 Source Brake Cable

Description	Cable Rating	Length m (ft)	Cat. No.
90° M25 Source Brake Cable	IP67/NEMA Type 4	3m (9.8)	285-BRC25-M3
		6 m (19.6)	285-BRC25-M6
		14 m (45.9)	285-BRC25-M14

PID Setup

PID Loop

The Bulletin 284 ArmorStart® Distributed Motor with sensorless vector control has a built-in PID (proportional, integral, differential) control loop. The PID loop is used to maintain a process feedback (such as pressure, flow, or tension) at a desired set point. The PID loop works by subtracting the PID feedback from a reference and generating an error value. The PID loop reacts to the error, based on the PID Gains, and outputs a frequency to try to reduce the error value to 0. To enable the PID loop, Parameter 232 (PID Ref Sel) must be set to an option other than 0 **PID Disabled**.

Exclusive Control and Trim Control are two basic configurations where the PID loop may be used.

Exclusive Control

In Exclusive Control, the Speed Reference becomes 0, and the PID Output becomes the entire Freq Command. Exclusive Control is used when Parameter 232 (PID Ref Sel) is set to option 1, 2, 3, or 4. This configuration does not require a master reference, only a desired set point, such as a flow rate for a pump.

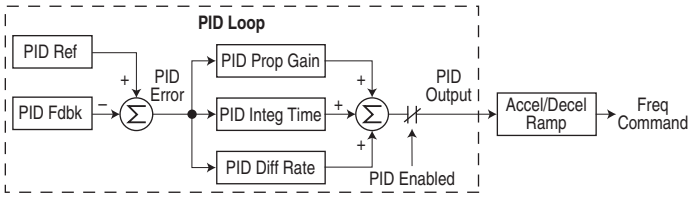

Example

- In a pumping application, the PID Reference equals the Desired System Pressure set point.
- The Pressure Transducer signal provides PID Feedback to the drive. Fluctuations in actual system pressure, due to changes in flow, result in a PID Error value.
- The drive output frequency increases or decreases to vary motor shaft speed to correct for the PID Error value.
- The Desired System Pressure set point is maintained as valves in the system are opened and closed causing changes in flow.
- When the PID Control Loop is disabled, the Commanded Speed is the Ramped Speed Reference.

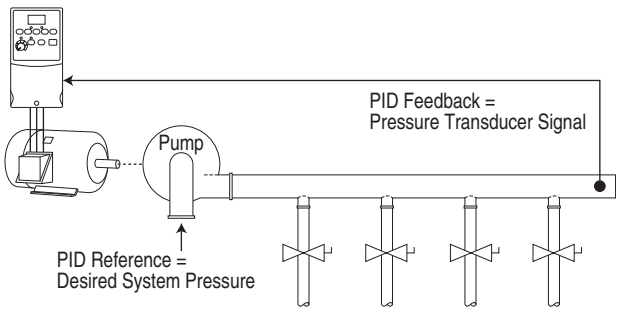

Trim Control

In Trim Control, the PID Output is added to the Speed Reference. In Trim mode, the output of the PID loop bypasses the accel/decel ramp as shown. Trim Control is used when Parameter 232 (PID Ref Sel) is set to option 5, 6, 7, or 8.

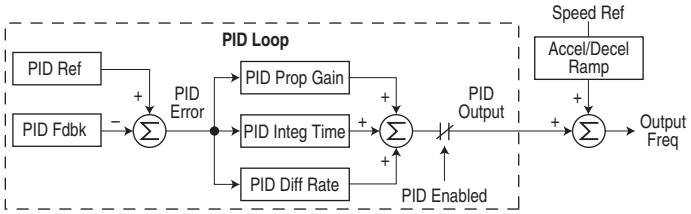

Example

- In a winder application, the PID Reference equals the Equilibrium set point.
- The Dancer Pot signal provides PID Feedback to the drive. Fluctuations in tension result in a PID Error value.
- The Master Speed Reference sets the wind/unwind speed.
- As tension increases or decreases during winding, the Speed Reference is trimmed to compensate. Tension is maintained near the Equilibrium set point.

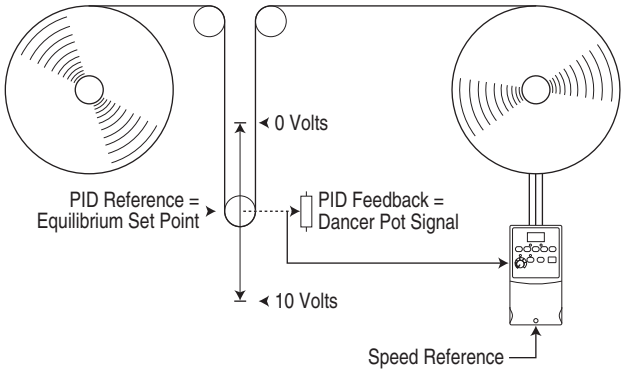

PID Reference and Feedback

Parameter 232 (PID Ref Sel) is used to enable the PID mode (Parameter 232 ¦ 0 **PID Disabled**) and to select the source of the PID Reference. If A132 (PID Ref Sel) is not set to 0 **PID Disabled**, PID can still be disabled by select programmable digital input options (Parameters 151…154) such as Jog, Local, or PID Disable.

Option	Description
0 **PID Disabled**	Disables the PID loop (default setting)
1 **PID Setpoint**	Selects Exclusive Control. Parameter 137 (PID Setpoint) will be used to set the value of the PID Reference
4 **Comm Port**	Selects Exclusive Control. The reference word from a communication network DeviceNet™ becomes the PID Reference. The value sent over the network is scaled so that Parameter 135 (Maximum Freq) x 10 = 100% reference. For example, with (Maximum Freq) = 60 Hz, a value of 600 sent over the network would represent 100% reference.
5 **Setpnt, Trim**	Selects Trim Control. Parameter 137 (PID Setpoint) will be used to set the value of the PID Reference.
8 **Comm, Trim**	Selects Trim Control. The reference word from a communication network DeviceNet becomes the PID Reference. The value sent over the network is scaled so that Parameter 135 (Maximum Freq) x 10 = 100% reference. For example, with (Maximum Freq) = 60 Hz, a value of 600 sent over the network would represent 100% reference.

Parameter 233 (PID Feedback Sel) is used to select the source of the PID feedback.

Option	Description
2 **Comm Port**	The Consumed Assembly (Instance 164 — Default Consumed Inverter Type Distributed Motor Controller) from a communication network (seepage C-9 for details on the Consumed Assembly) which becomes the PID Feedback. The value sent over the network is scaled so that Parameter 135 (Maximum Freq) x 10 = 100% Feedback. For example, with (Maximum Freq) = 60 Hz, a value of 600 sent over the network would represent 100% Feedback.

PID Deadband

Parameter 238 (PID Deadband) is used to set a range, in percent, of the PID Reference that the drive will ignore.

Example

- (PID Deadband) is set to 5.0
- The PID Reference is 25.0%
- The PID Regulator will not act on a PID Error that falls between 20.0 and 30.0%

PID Preload

The value set in Parameter 239 (PID Preload), in Hertz, will be pre-loaded into the integral component of the PID at any start or enable. This will cause the drive's frequency command to initially jump to that preload frequency, and the PID loop starts regulating from there.

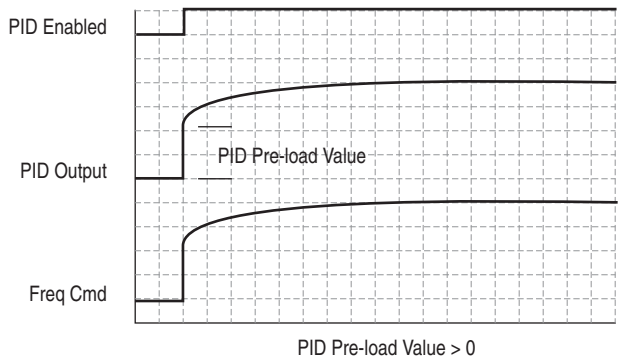

PID Limits

Parameter 230 (PID Trim Hi) and Parameter 231 (PID Trim Lo) are used to limit the PID output and are only used in trim mode. (PID Trim Hi) sets the maximum frequency for the PID output in trim mode. (PID Trim Lo) sets the reverse frequency limit for the PID output in trim mode. Note that when the PID reaches the Hi or Lo limit, the PID regulator stops integrating so that windup does not occur.

PID Gains

The proportional, integral, and differential gains make up the PID regulator.

- Parameter 234 (PID Prop Gain)

  The proportional gain (unitless) affects how the regulator reacts to the magnitude of the error. The proportional component of the PID regulator outputs a speed command proportional to the PID error. For example, a proportional gain of 1 would output 100% of maximum frequency when the PID error is 100% of the analog input range. A larger value for (PID Prop Gain) makes the proportional component more responsive, and a smaller value makes it less responsive. Setting (PID Prop Gain) to 0.00 disables the proportional component of the PID loop.

- Parameter 235 (PID Integ Time)

  The integral gain (units of seconds) affects how the regulator reacts to error over time and is used to get rid of steady state error. For example, with an integral gain of 2 seconds, the output of the integral gain component would integrate up to 100% of maximum frequency when the PID error is 100% for 2 seconds. A larger value for (PID Integ Time) makes the integral component less responsive, and a smaller value makes it more responsive. Setting (PID Integ Time) to 0 disables the integral component of the PID loop.

- Parameter 236 (PID Diff Rate)

  The Differential gain (units of 1/seconds) affects the rate of change of the PID output. The differential gain is multiplied by the difference between the previous error and current error. Thus, with a large error the D has a large effect and with a small error the D has less of an effect. This parameter is scaled so that when it is set to 1.00, the process response is 0.1% of (Maximum Freq) when the process error is changing at 1%/second. A larger value for (PID Diff Rate) makes the differential term have more of an effect and a small value makes it have less of an effect. In many applications, the D gain is not needed. Setting (PID Diff Rate) to 0.00 (factory default) disables the differential component of the PID loop.

Guidelines for Adjusting the PID Gains

1. Adjust the proportional gain. During this step it may be desirable to disable the integral gain and differential gain by setting them to 0. After a step change in the PID Feedback:

- If the response is too slow increase Parameter 234 (PID Prop Gain).
- If the response is too quick and/or unstable (see Figure H.1), decrease Parameter 234 (PID Prop Gain).
- Typically, Parameter 234 (PID Prop Gain) is set to some value below the point where the PID begins to go unstable.

2. Adjust the integral gain (leave the proportional gain set as in Step 1). After a step change in the PID Feedback:

- If the response is too slow (see Figure H.2), or the PID Feedback does not become equal to the PID Reference, decrease Parameter 235 (PID Integ Time).
- If there is a lot of oscillation in the PID Feedback before settling out (see Figure H.3), increase Parameter 235 (PID Integ Time).

3. At this point, the differential gain may not be needed. However, if after determining the values for Parameter 234 (PID Prop Gain) and Parameter 235 (PID Integ Time):
   - Response is still slow after a step change, increase Parameter 236 (PID Diff Rate).
   - Response is still unstable, decrease Parameter 236 (PID Diff Rate).

The following figures show some typical responses of the PID loop at different points during adjustment of the PID Gains.

Figure H.1 Unstable

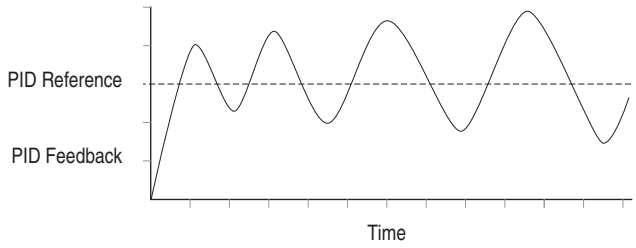

Figure H.2 Slow Response — Over-Damped

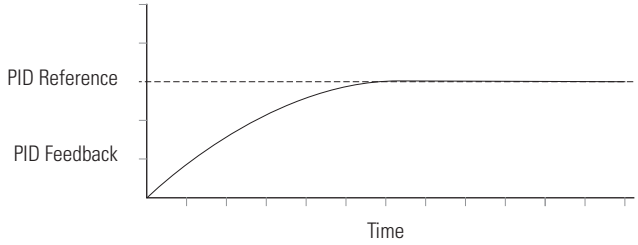

Figure H.3 Oscillation — Under-Damped

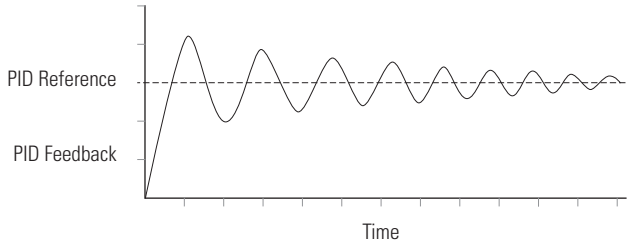

Figure H.4 Good Response — Critically Damped

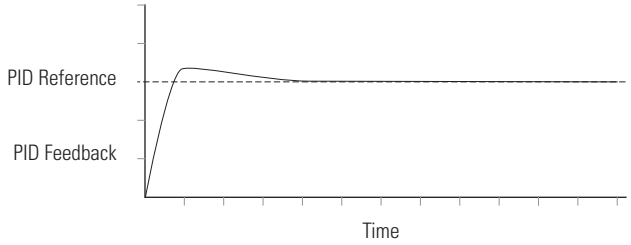

Step Logic, Basic Logic and Timer/ Counter Functions

Four Bulletin 284 ArmorStart® logic functions provide the capability to program simple logic functions without a separate controller.

- Step Logic Function

  Steps through up to eight preset speeds based on programmed logic. Programmed logic can include conditions that need to be met from digital inputs programmed as Logic In1 and Logic In2 before stepping from one preset speed to the next. A timer is available for each of the eight steps and is used to program a time delay before stepping from one preset speed to the next. The status of a digital output can also be controlled based on the step being executed.

- Basic Logic Function

  Up to two digital inputs can be programmed as Logic In1 and/or Logic In2. A digital output can be programmed to change state based on the condition of one or both inputs based on basic logic functions such as AND, OR, NOR. The basic logic functions can be used with or without step logic.

- Timer Function

  A digital input can be programmed for Timer Start. A digital output can be programmed as a Timer Out with an output level programmed to the desired time. When the timer reaches the time programmed into the output level the output will change state. The timer can be reset via a digital input programmed as Reset Timer.

- Counter Function

  A digital input can be programmed for Counter In. A digital output can be programmed as Counter Out with an output level programmed to the desired number of counts. When the counter reaches the count programmed into the output level the output will change state. The counter can be reset via a digital input programmed as Reset Counter.

Step Logic Using Timed Steps

To activate this function, set Parameter 138 (Speed Reference) to 6 **Stp Logic**. Three parameters are used to configure the logic, speed reference, and time for each step.

- Logic is defined using Parameters 240…247 (Stp Logic x).
- Preset Speeds are set with Parameters 170…177 (Preset Freq x).
- Time of operation for each step is set with Parameters 250…257 (Stp Logic Time x).

The direction of motor rotation can be forward or reverse.

Figure I.1 Using Timed Steps

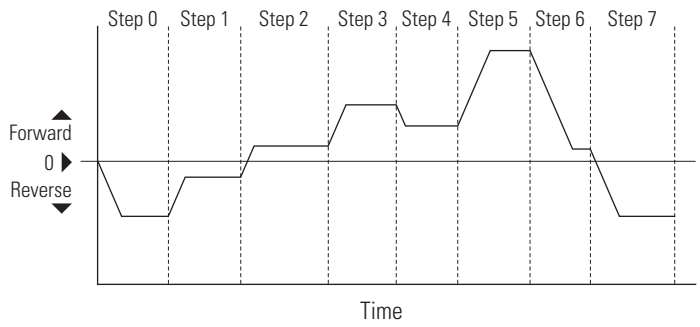

Step Logic Sequence

- Sequence begins with a valid start command.
- A normal sequence begins with Step 0 and transitions to the next step when the corresponding step logic time has expired.
- Step 7 is followed by Step 0.
- Sequence repeats until a stop is issued or a fault condition occurs.

Step Logic Using Basic Logic Functions

Digital input and digital output parameters can be configured to use logic to transition to the next step. Logic In1 and Logic In2 are defined by programming Parameters 151…154 …Digital Inx Sel… to Option 23 **Logic In1** or Option 24 **Logic In2**.

Example

- Run at Step 0.
- Transition to Step 1 when Logic In1 is true.

  Logic senses the edge of Logic In1 when it transitions from Off to On. Logic In1 is not required to remain On.

- Transition to Step 2 when both Logic In1 and Logic In2 are true.

  The drive senses the level of both Logic In1 and Logic In2 and transitions to Step 2 when both are On.

- Transition to Step 3 when Logic In2 returns to a false or Off state.

  Inputs are not required to remain in the On condition except under the logic conditions used for the transition from Step 2 to Step 3.

Figure I.2

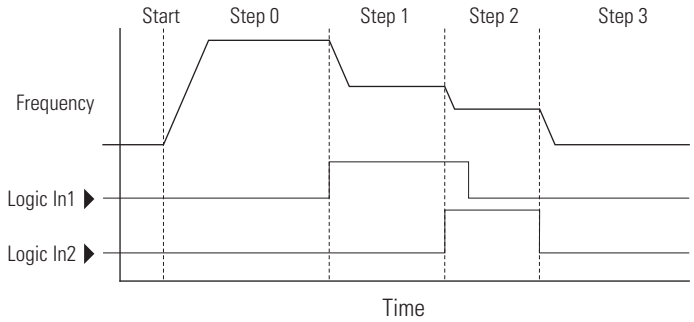

The step time value and the basic logic may be used together to satisfy machine conditions. For instance, the step may need to run for a minimum time period and then use the basic logic to trigger a transition to the next step.

Figure I.3

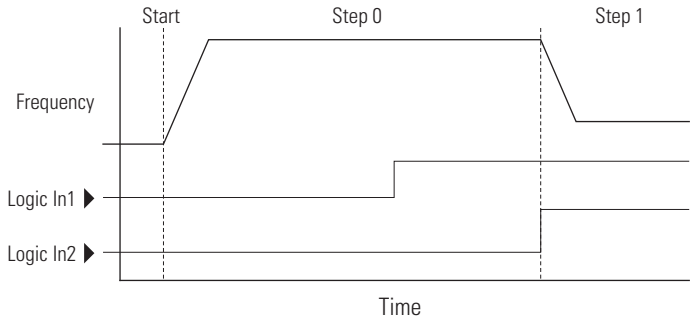

Timer Function

Digital inputs and outputs control the timer function and are configured with Parameters 151…154 (Digital Inx Sel) set to 18 **Timer Start** and 20 **Reset Timer**.

Digital outputs (relay and opto type) define a preset level and indicate when the level is reached. Level Parameters 156 (Relay Out Level), 159 (Opto Out1 Level), and 162 (Opto Out2 Level) are used to set the desired time in seconds.

Parameters 155 (Relay Out Sel), 158 (Opto Out1 Sel), and 161 (Opto Out2 Sel) are set to option 16 **Timer Out** and cause the output to change state when the preset level is reached.

Counter Function

Digital inputs and outputs control the counter function and are configured with Parameters 151…154 (Digital Inx Sel) set to 19 **Counter In** and 21 **Reset Counter**.

Digital outputs (relay and opto type) define a preset level and indicate when the level is reached. Level Parameters 156 (Relay Out Level), 159 (Opto Out1 Level), and 162 (Opto Out2 Level) are used to set the desired count value.

Parameters 155 (Relay Out Sel), 158 (Opto Out1 Sel), and 161 (Opto Out2 Sel) are set to 17 **Counter Out** which causes the output to change state when the level is reached.

Example

- A photo eye is used to count packages on a conveyor line.
- An accumulator holds the packages until five are collected.
- A diverter arm redirects the group of five packages to a bundling area.
- The diverter arm returns to its original position and triggers a limit switch that resets the counter.
- Parameters are set to the following options:
    - 151 (Digital In1 Sel) set to 19 to select **Counter In**
    - 152 (Digital In2 Sel) set to 21 to select **Reset Counter**
    - 155 (Relay Out Sel) set to 17 to select **Counter Out**
    - 156 (Relay Out Level) set to 5.0 (counts)

Step Logic Parameters

Digit 3	Digit 2	Digit 1	Digit 0
0	0	F	1

Setting	Accel/Decel Parameters Used	Step Logic Output State	Commanded Direction
0	1	Off	FWD
1	1	Off	REV
2	1	Off	No Output
3	1	On	FWD
4	1	On	REV
5	1	On	No Output
6	2	Off	FWD
7	2	Off	REV
8	2	Off	No Output
9	2	On	FWD
A	2	On	REV
b	2	On	No Output

Setting	Logic
0	Jump to Step 0
1	Jump to Step 1
2	Jump to Step 2
3	Jump to Step 3
4	Jump to Step 4
5	Jump to Step 5
6	Jump to Step 6
7	Jump to Step 7
8	End Program (Normal Stop)
9	End Program (Coast to Stop)
A	End Program and Fault (F2)

Setting	Description	Logic
0	Skip Step (jump immediately).	SKIP
1	Step based on the time programmed in the respective (Stp Logic Time x) parameter.	TIMED
2	Step if Logic In1 is active (logically true).	TRUE
3	Step if Logic In2 is active (logically true).	TRUE
4	Step if Logic In1 is not active (logically false).	FALSE
5	Step if Logic In2 is not active (logically false).	FALSE
6	Step if either Logic In1 or Logic In2 is active (logically true).	OR
7	Step if both Logic In1 and Logic In2 is active (logically true).	AND
8	Step if neither Logic In1 or Logic In2 is active (logically true).	NOR

Setting	Description	Logic
9	Step if Logic In1 is active (logically true) and Logic In2 is not active (logically false).	XOR
A	Step if Logic In2 is active (logically true) and Logic In1 is not active (logically false).	XOR
b	Step after (Stp Logic Time x) and Logic In1 is active (logically true).	TIMED AND
C	Step after (Stp Logic Time x) and Logic In2 is active (logically true).	TIMED AND
d	Step after (Stp Logic Time x) and Logic In1 is not active (logically false).	TIMED OR
E	Step after (Stp Logic Time x) and Logic In2 is not active (logically false).	TIMED OR
F	Do not step OR no jump to, so use Digit 0 logic.	IGNORE

Setting	Description	Logic
0	Skip Step (jump immediately).	SKIP
1	Step based on the time programmed in the respective (Stp Logic Time x) parameter.	TIMED
2	Step if Logic In1 is active (logically true).	TRUE
3	Step if Logic In2 is active (logically true).	TRUE
4	Step if Logic In1 is not active (logically false).	FALSE
5	Step if Logic In2 is not active (logically false).	FALSE
6	Step if either Logic In1 or Logic In2 is active (logically true).	OR
7	Step if both Logic In1 and Logic In2 is active (logically true).	AND
8	Step if neither Logic In1 or Logic In2 is active (logically true).	NOR
9	Step if Logic In1 is active (logically true) and Logic In2 is not active (logically false).	XOR
A	Step if Logic In2 is active (logically true) and Logic In1 is not active (logically false).	XOR
b	Step after (Stp Logic Time x) and Logic In1 is active (logically true).	TIMED AND
C	Step after (Stp Logic Time x) and Logic In2 is active (logically true).	TIMED AND
d	Step after (Stp Logic Time x) and Logic In1 is not active (logically false).	TIMED OR
E	Step after (Stp Logic Time x) and Logic In2 is not active (logically false).	TIMED OR
F	Use logic programmed in Digit 1.	IGNORE

Rockwell Automation Support

Rockwell Automation provides technical information on the Web to assist you in using its products. At http://www.rockwellautomation.com/support you can find technical and application notes, sample code, and links to software service packs. You can also visit our Support Center at https://rockwellautomation.custhelp.com/ for software updates, support chats and forums, technical information, FAQs, and to sign up for product notification updates.

In addition, we offer multiple support programs for installation, configuration, and troubleshooting. For more information, contact your local distributor or Rockwell Automation representative, or visit http://www.rockwellautomation.com/services/online-phone.

Installation Assistance

If you experience a problem within the first 24 hours of installation, review the information that is contained in this manual. You can contact Customer Support for initial help in getting your product up and running.

United States or Canada	1.440.646.3434
Outside United States or Canada	Use the Worldwide Locator at http://www.rockwellautomation.com/rockwellautomation/support/overview.page, or contact your local Rockwell Automation representative.

New Product Satisfaction Return

Rockwell Automation tests all of its products to help ensure that they are fully operational when shipped from the manufacturing facility. However, if your product is not functioning and needs to be returned, follow these procedures.

United States	Contact your distributor. You must provide a Customer Support case number (call the phone number above to obtain one) to your distributor to complete the return process.
Outside United States	Please contact your local Rockwell Automation representative for the return procedure.

Documentation Feedback

Your comments will help us serve your documentation needs better. If you have any suggestions on how to improve this document, complete this form, publication RA-DU002, available at http://www.rockwellautomation.com/literature/.

Rockwell Automation maintains current product environmental information on its website at http://www.rockwellautomation.com/rockwellautomation/about-us/sustainability-ethics/product-environmental-compliance.page.

Rockwell Otomasyon Ticaret A.Ş., Kar Plaza İş Merkezi E Blok Kat:6 34752 İçerenköy, İstanbul, Tel: +90 (216) 5698400

www.rockwellautomation.com

Power, Control and Information Solutions Headquarters

Americas: Rockwell Automation, 1201 South Second Street, Milwaukee, WI 53204-2496 USA, Tel: (1) 414.382.2000, Fax: (1) 414.382.4444
Europe/Middle East/Africa: Rockwell Automation NV, Pegasus Park, De Kleetlaan 12a, 1831 Diegem, Belgium, Tel: (32) 2 663 0600, Fax: (32) 2 663 0640
Asia Pacific: Rockwell Automation, Level 14, Core F, Cyberport 3, 100 Cyberport Road, Hong Kong, Tel: (852) 2887 4788, Fax: (852) 2508 1846

Publication 280-UM004B-EN-P - January 2015
Supersedes Publication 280-UM004A-EN-P - June 2009

Copyright © 2015 Rockwell Automation, Inc. All rights reserved. Printed in the U.S.A.