Installation Instructions
PHOTOSWITCH® Bulletin 44B Photoelectric Sensor

IMPORTANT: SAVE THESE INSTRUCTIONS FOR FUTURE USE.

Description

The Bulletin 44B photoelectric sensor is intended for industrial applications which require the reliable detection of objects that fall close to a surface which must be ignored. Unlike standard diffuse style sensors, the Bulletin 44B incorporates a dual receiver optical system to actively "see" both the target and the background areas. This allows the sensor to suppress any background reflections.

The Bulletin 44B photoelectric sensor is available in two sensing modes with a common mechanical optics system. The difference between the two lies in their operation. As shown to the right, both sensing modes will actively "see" the background condition using the second internal receiver. The background suppression sensing mode will output when it "sees" reflected light from the target. In contrast, the foreground suppression sensing mode will use the background as a "reflector" and output when sensed area is blocked by the target. In general, the foreground suppression sensing mode should be used when looking at a dark, irregularly shaped target on a highly reflective background. Background suppression sensing mode is well suited for light targets on a less reflective background.

For added installation and troubleshooting assistance, both sensing modes contain a green LED status indicator to warn the user of an unstable application condition, i.e. dirty lens, low contrast. This indicator will remain steady ON during normal operation, but flash to indicate a change in the application environment.

Features

- Adjustable background and foreground suppression models
- Power, output, and stability status indicators
- Micro QD connection with 90° swivel
- Low voltage 24V DC operation
- Protected from miswiring
- Dual NPN and PNP outputs
- Fast 1ms response time

General Specifications

Catalog Number	44BSB-1JBA1-D4 44BSB-1KBA1-D4	44BSN-1JBA1-D4 44BSN-1KBA1-D4
Sensing Modes	Background suppression (BGS)	Foreground suppression (FGS)
Sensing Range	30 to 300mm	30 to 200mm
Light Source	880nm Infrared	
Spot Size	20mm spot @ 300mm	15mm spot @ 200mm
Adjustment Knob	6 turn to set cutoff point	
Unit Protection	Output short circuit, reverse polarity, overload, false pulse	
Supply Voltage	20-30V DC	
Current Consumption	20mA maximum	
Maximum Leakage Current	10μA	
Output Type	NPN and PNP	
Output Mode	Light/dark operate by catalog number	
Output Rating	100mA @ 24V DC	
Response Time	1ms maximum	
Housing Material	High impact acrylic	
Lens Material	High impact acrylic	
LED Indicators	See User Interface table below	
Connection Types	4-pin DC micro on 90° degree swivel	
Supplied Accessories	None	
Optional Accessories	Cordsets, mounting brackets	
Operating Environment	NEMA 3, 4X, 6P, 12, 13 (IP67)	
Vibration	10-55Hz, 1mm amplitude, Meets or exceeds IEC 947-5-2	
Shock	30G with 1ms pulse duration, Meets or exceeds IEC 947-5-2	
Operating Temperature	-20°C to +70°C (-4°F to +158°F)	
Relative Humidity	5…95%	
Approvals	UL listed, c-UL, CE marked for all applicable directives	

User Interface

Color	State	Status
Green	OFF	Sensor not powered, output active, SCP active
	ON	Sensor powered
	Flashing	Unstable margin
Orange	OFF	Output not activated
	ON	Output activated

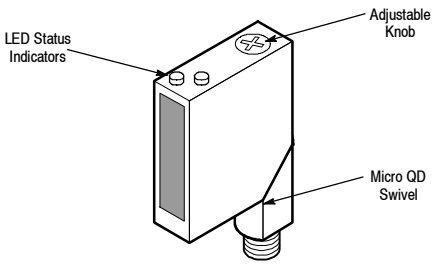

Dimensions—mm (inches)

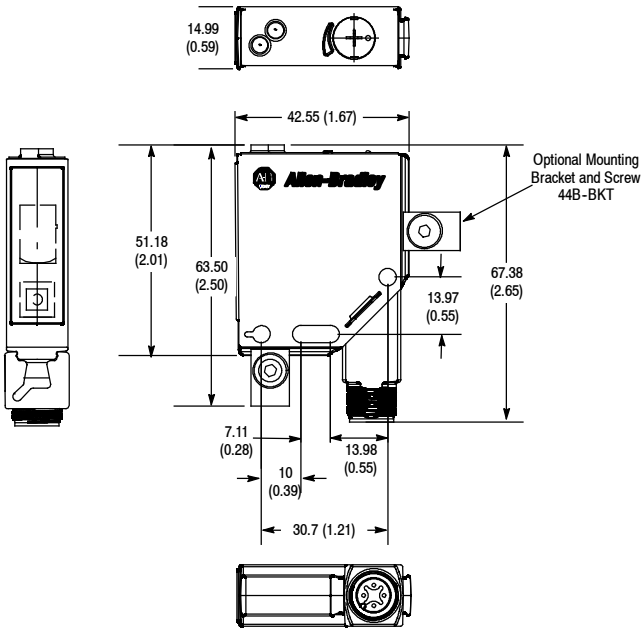

Wiring Diagrams

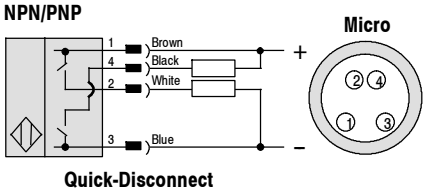

Typical Response Curve

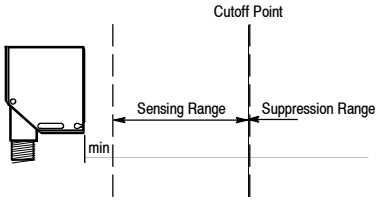

Typical Response Curve

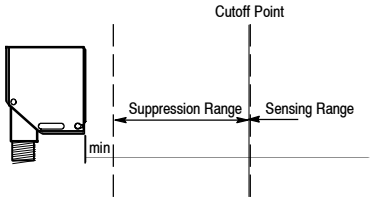

Background Suppression

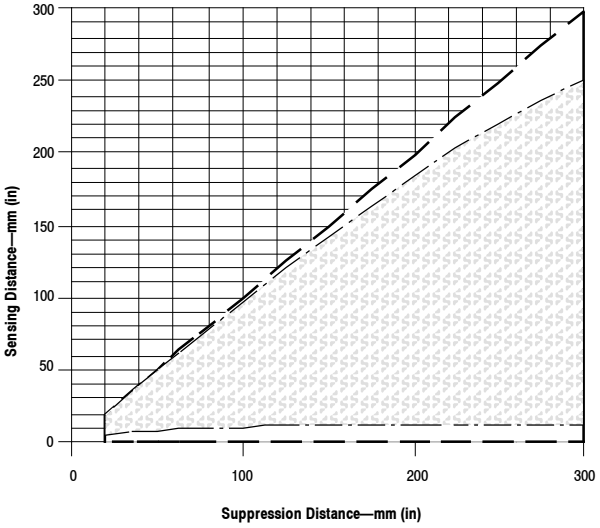

Foreground Suppression

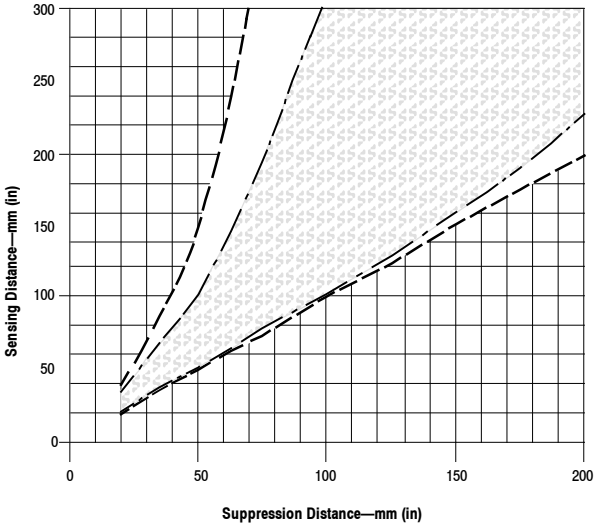

Mounting the Sensor

The Bulletin 44B photoelectric sensor must be mounted on a firm stable surface or support. A mounting which is subject to excessive vibration or shifting may cause intermittent operation of the sensor. Rockwell Automation offers a wide variety of mounting brackets and quick-disconnect cables for ease of installation. Refer to *www.ab.com/sensors* for a complete listing of these products. Once securely mounted, the sensor can be wired per the attached wiring diagrams.

Wiring the Sensor

The Bulletin 44B photoelectric sensor is available with a micro quick-disconnect for ease of installation and maintenance. Rockwell Automation recommends the use of the 889 Series of cordsets and patchcords. All external wiring should conform to the National Electric Code and/or all applicable local codes.

Application Notes

Due to the detection method used by these sensors, it is important that the sensor be mounted in such a way as to ensure that the target passes in an orientation perpendicular to the sensors lenses.

Example of Fixed Background Suppression

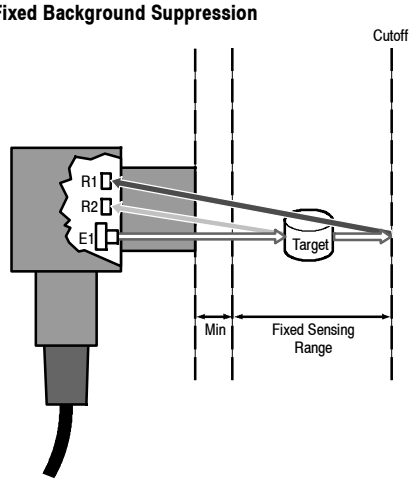

The gap between the target and background will vary with the shape and reflectivity of the target. This variance is known as the suppression quality and can be determined by the response curves shown for the sensor.

Example of Adjustable Background Suppression

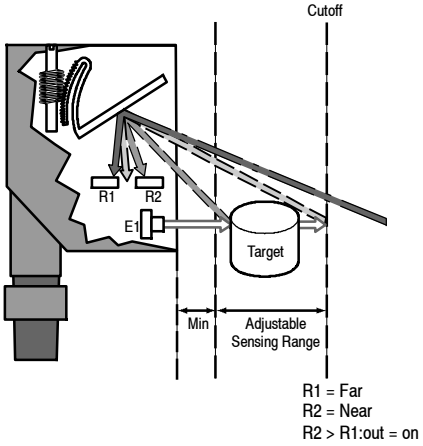

Configuring the Sensor (Background Suppression models)

Once securely installed, the sensing range of the sensor must be set using the six turn adjustment knob on the top cover. This knob is used to set the cutoff point (point at which the background will be suppressed) of the sensor.

1. Apply power to the sensor and ensure that the green power/stability LED turns ON.
2. Using an instrument screwdriver, adjust the sensor background cutoff point to its minimum setting by turning the knob counterclockwise until a “click” can be heard. The raised dimple on the knob should be at roughly the 11 o’clock position.
3. The background cutoff point for the 44BSB sensor may be set between 30mm and 300mm.
4. Set the background cutoff point by rotating the knob clockwise until the orange status LED turns ON (OFF for 44BSB-1KBA1-D4 models).
5. Rotate the background cutoff point knob counterclockwise until the orange status LED just turns OFF (ON for 44BSB-1KBA1-D4 models).
6. *This indicates that the background has been sensed and is being suppressed by the sensor. If the indicator does not turn ON, it means that the background is beyond the background cutoff point and will be ignored.*
7. The sensor is now configured to detect targets between 30mm and this cutoff point. Note that the reflectivity of the target will influence the distance between the background and the cutoff point. As illustrated in the figure below, a nonreflective target will require a greater gap due to the smaller amount of light being returned to the sensor. Use the enclosed response curves to help determine the distance of this gap.

Application Example

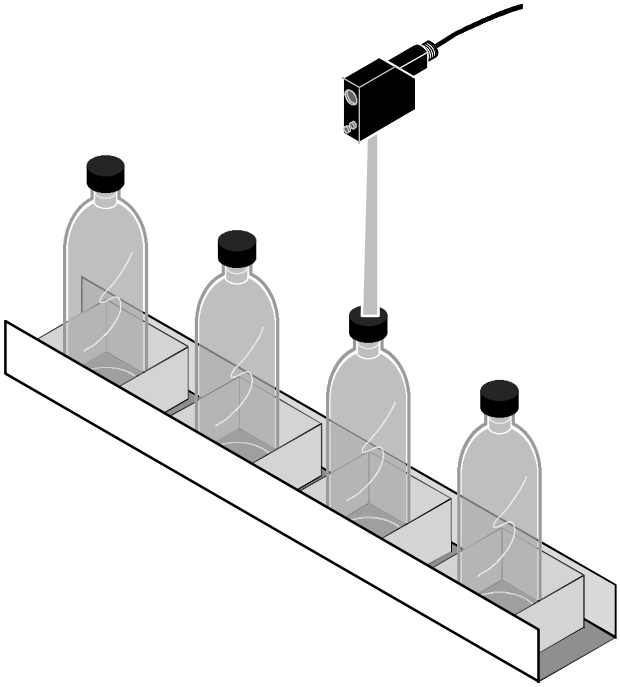

Configuring the Sensor (Foreground Suppression models)

Once securely installed, the sensing range of the sensor must be set using the six turn adjustment knob on the top cover. This knob is used to set the cutoff point (point at which the foreground will be suppressed) of the sensor.

1. Apply power to the sensor and ensure that the green power/stability LED turns ON.
2. Using an instrument screwdriver, adjust the sensor foreground cutoff point to its minimum setting by turning the knob counterclockwise until a “click” can be heard. The raised dimple on the knob should be at roughly the 11 o’clock position.
3. The foreground cutoff point for the 44BSB sensor may be set between 30mm and 150mm.
4. Set the foreground cutoff point by rotating the knob clockwise until the orange status LED turns ON (OFF for 44BSB-1KBA1-D4 models).
5. Continue rotating the knob clockwise until the orange status LED turns OFF (ON for 44BSB-1KBA1-D4 models).
6. Rotate the foreground cutoff point knob counterclockwise until the orange status LED just turns ON (OFF for 44BSN-1KBA1-D4 models).
7. *This indicates that the background has been sensed and is being used as the target. When an object is placed between the sensor lens and this point, it will be detected due to the absence of reflected light.*
8. As with the background suppression sensing modes, the reflectivity of the target will influence the gap between the target and the cutoff point. Use the enclosed response curves to help determine the distance of this gap.

Application Example

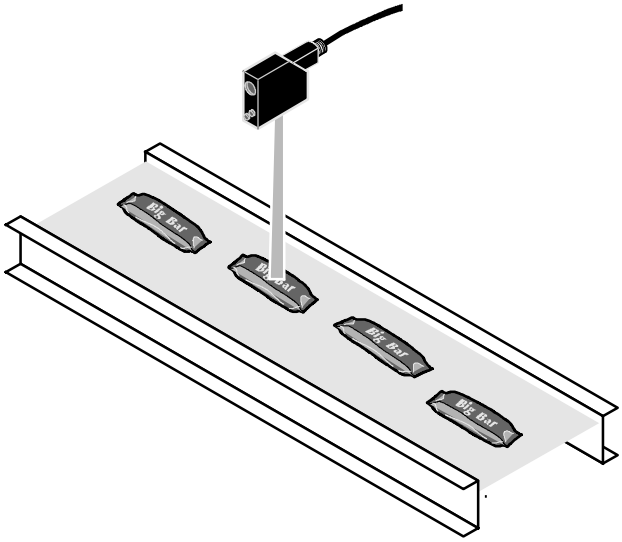

Allen-Bradley

PHOTOSWITCH® is a registered trademark of Rockwell Automation.
Noryl® is a registered trademark of General Electric Company.

Publication 75051-037-01(A)
December 2004
Printed in USA