Technical Data

Original Instructions

NEMA Contactor and Starter Specifications

Bulletins 500, 502, 503, 505, 506, 506X, 507, 507X, 509, 512, 513, 522E/F/G, 523E/F/G

Topic	Page
Summary of Changes	2
Specifications	3
Electrical Ratings	3
Mechanical Ratings	4
Construction	4
Environmental	5
Short Circuit Rating	5
AC Coil Data	6
Auxiliary Contacts (NEMA A600 and P300) — Bulletin 595, 596	6
Load-life Curves	6
Approximate Dimensions	8
Type 1 General Purpose Lift-Off Enclosure	8
Type 1 Hinged Enclosure — with or without Control Transformer	9
Type 1 General Purpose Painted Enclosure	10
Type 3R/12 Rainproof, Dusttight, 4/4X Watertight, Non-metallic Enclosure — with or without Control Transformer	11
Type 3R/4/12 Rainproof, Dusttight — Industrial Use Enclosures	12
Unilock Enclosures — Type 3R, 7 & 9, Class I Groups C & D, Class II, Groups E, F & G — Divisions 1 & 2	13
Bolted Enclosures — Type 3R, 7 & 9, Class I, Groups C & D, Class II, Groups E, F & G — Divisions 1 & 2	14...18
Additional Resources	19

Summary of Changes

This publication contains the following new or updated information. This list includes substantive updates only and is not intended to reflect all changes.

Topic	Page
Updated specifications , type 1 hinged enclosure figures and size tables	throughout

Specifications

Electrical Ratings

NEMA Size	Load Voltage	Continuous Current Rating	Service Limit Current Rating (1)	Maximum Hp Rating (Non-plugging and non-jogging duty)		Maximum Hp Rating (Plugging and jogging duty) (2)		Transformer Primary Switching kVa Rating (Inrush Current ≤ 20 times Continuous Current)		Transformer Primary Switching kVa Rating (Inrush Current = 20 to 40 times Continuous Current)		Capacitor Switching kVAR (3)	Maximum Circuit Closing Inrush Current [A] Peak Including Offset
	[V]	[A]	[A]	1Ø	3Ø	1Ø	3Ø	1Ø	3Ø	1Ø	3Ø	3Ø	3Ø
00	115	9	11	1/3	–	1/4	–	–	–	–	–	–	87
	200			–	1-1/2	–	1	–	–	–	–	–	
	230			1	1-1/2	1/2	1	–	–	–	–	–	
	380			–	1-1/2	–	1	–	–	–	–	–	
	460			–	2	–	1-1/2	–	–	–	–	–	
	575			–	2	–	1-1/2	–	–	–	–	–	
0	115	18	21	1	–	1/2	–	0.6	–	0.3	–	–	140
	200			–	3	–	1-1/2	–	1.8	–	0.9	–	
	230			2	3	1	1-1/2	1.2	2.1	0.6	1	–	
	380			–	5	–	1-1/2	–	–	–	–	–	
	460			–	5	–	2	2.4	4.2	1.2	2.1	–	
	575			–	5	–	2	3	5.2	1.5	2.6	–	
1	115	27	32	2	–	1	–	1.2	–	0.6	–	–	288
	200			–	7-1/2	–	3	–	3.6	–	1.8	–	
	230			3	7-1/2	2	3	2.4	4.3	1.2	2.1	6	
	380			–	10	–	5	–	–	–	–	–	
	460			–	10	–	5	4.9	8.5	2.5	4.3	13.5	
	575			–	10	–	5	6.2	11	3.1	5.3	17	
1P	115	36	42	3	–	1-1/2	–	–	–	–	–	–	–
	230			5	–	3	–	–	–	–	–	–	–
2	115	45	52	3	–	2	–	2.1	–	1	–	–	483
	200			–	10	–	7-1/2	–	6.3	–	3.1	–	
	230			7-1/2	15	5	10	4.1	7.2	2.1	3.6	12	
	380			–	25	–	15	–	–	–	–	–	
	460			–	25	–	15	8.3	14	4.2	7.2	25	
	575			–	25	–	15	10	18	5.2	8.9	31	
3	115	90	104	7-1/2	–	7-1/2	–	4.1	–	2	–	–	947
	200			–	25	–	15	–	12	–	6.1	–	
	230			15	30	15	20	8.1	14	4.1	7.0	27	
	380			–	50	–	30	–	–	–	–	–	
	460			–	50	–	30	16	28	8.1	14	53	
	575			–	50	–	30	20	35	10	18	67	
4	115	135	156	–	–	–	–	6.8	–	3.4	–	–	1581
	200			–	40	–	25	–	20	–	10	–	
	230			–	50	–	30	14	23	6.8	12	40	
	380			–	75	–	50	–	–	–	–	–	
	460			–	100	–	60	27	47	14	23	80	
	575			–	100	–	60	34	59	17	29	100	
5	115	270	311	–	–	–	–	14	–	6.8	–	–	3163
	200			–	75	–	60	–	41	–	20	–	
	230			–	100	–	75	27	47	14	24	80	
	380			–	150	–	125	–	–	–	–	–	
	460			–	200	–	150	54	94	27	47	160	
	575			–	200	–	150	68	117	34	59	200	

NEMA Size	Load Voltage	Continuous Current Rating	Service Limit Current Rating (1)	Maximum Hp Rating (Non-plugging and non-jogging duty)		Maximum Hp Rating (Plugging and jogging duty) (2)		Transformer Primary Switching kVa Rating (Inrush Current ≤ 20 times Continuous Current)		Transformer Primary Switching kVa Rating (Inrush Current = 20 to 40 times Continuous Current)		Capacitor Switching kVAR (3)	Maximum Circuit Closing Inrush Current [A] Peak Including Offset
	[V]	[A]	[A]	1Ø	3Ø	1Ø	3Ø	1Ø	3Ø	1Ø	3Ø	3Ø	3Ø
6	115	540	621	–	–	–	–	27	–	14	–	–	6326
	200			–	150	–	125	–	81	–	41	–	
	230			–	200	–	150	54	94	27	47	160	
	380			–	300	–	250	–	–	–	–	–	
	460			–	400	–	300	108	188	54	94	320	
	575			–	400	–	300	135	234	68	117	400	
7	230	810	932	–	300	–	–	–	–	–	–	240	9470
	460			–	600	–	–	–	–	–	–	480	
	575			–	600	–	–	–	–	–	–	600	
8	230	1215	1400	–	450	–	–	–	–	–	–	360	14205
	460			–	900	–	–	–	–	–	–	720	
	575			–	900	–	–	–	–	–	–	900	

(1) **Service-Limit Current Ratings** – The service-limit current ratings that are shown represent the maximum rms current, in amperes, which the controller shall be permitted to carry for protracted periods in normal service. At service-limit current ratings, temperature rises shall be permitted to exceed those obtained by testing the controller at its continuous current rating. The current rating of overload relays or the trip current of other motor protective devices that are used shall not exceed the service-limit current rating of the controller.

(2) **Plugging or Jogging Service** – The listed horsepower ratings are recommended for those applications requiring repeated interruption of stalled motor current that is encountered in rapid motor reversal in excess of five openings or closings per minute and shall not be more than ten in a ten minute period.

(3) If maximum available current (at capacitor terminals) is greater than 3000 A, contact your local Rockwell Automation sales office, Allen-Bradley distributor, or NEMA ICS-2 Standard.

Mechanical Ratings

NEMA Size	Mechanical Life (Millions of Operations)	Maximum Number of Auxiliary Contacts	Operating Time [ms]	
			Pick-up (Average)	Drop-out (Average)
00	10	5	20	16
0	10	8	21	16
1	10	8	22	14
2	10	8	27	13
3	5	8	37	20
4	5	8	27	20
5	5	8	25	18
6	5	4	25...79	10...22
7	–	8	88	40
8	–	8	88	45

Construction

NEMA Size	Wire Size for Power Terminals	Required Torque on Power Terminal Wire Clamps and Pressure Connectors or Lugs	Type of Power Terminal	Contact Material		Requirements for Sizing of Wire
				Power Contacts	Auxiliary Contacts	
00	#16...10 AWG	9 lb•in	Pressure terminals	Silver alloy	Silver	All wire rated 167 °F (75 °C) or higher must be sized per the local Electrical Code for 167 °F (75 °C) wire.
0	#14...10 AWG	20 lb•in	Saddle or wire clamps			
1	#14...8 AWG	20 lb•in				
2	#14...4 AWG	45 lb•in	Pressure terminals			
3	#8...1/0 AWG	150 lb•in				
4	#6...4/0 AWG	275 lb•in				
5	#4 AWG...500 MCM	375 lb•in				
6	Lugs sold separately(1)					
7						
8						

(1) Contact your local Allen-Bradley distributor or Rockwell Automation sales office.

Environmental

NEMA Size	Operating Position	Operating Temperature Range	Altitude	Corrosion-Resistance
00	Horizontal	Starters with eutectic alloy Overload relay -13...+149 °F (-25...+65 °C) Starters with SMP™ Overload relay -13...+131 °F (-25...+55 °C) (provided condensation is prevented)	10 000 feet before derating	All metal parts are treated for corrosion-resistance
0	Vertical			
1				
2				
3				
4				
5				
6	Horizontal			
7	Vertical			
8				

Short Circuit Rating

Combination contactors and starters with disconnect switch: Bulletin 502, 506, 512, 522E, 522F, and 522G

Combination Contactors and Starters with Disconnect Switch: Bulletin 502, 506, 512, 522E, 522F, and 522G			
NEMA Size	**Fuse Type**	**Available Short Circuit Amperes RMS Symmetrical [A]**	**Maximum Voltage [V]**
0...3	H, K	5000	600
4...5	H, K	10 000	
0...5	J, R	100 000	
6	L	18 000	
7	L	18 000	
Combination Lighting Contactors with Disconnect Switch: Bulletin 502L			
Lighting Contactor Rating [A]	**Fuse Type**	**Available Short Circuit Amperes RMS Symmetrical [A]**	**Maximum Voltage [V]**
20...100	H, K	5000	600
200...300	H, K	10 000	
20...300	J, R	100 000	
Combination Contactors and Starters with Circuit Breaker: Bulletin 503, 507, 513, 523E, 523F, and 523G			
Enclosure Type	**NEMA Size**	**Available Short Circuit Amperes RMS Symmetrical [A]**	**Maximum Voltage [V]**
1, 3R, 3R/4/12, 4/4X (stainless)	0...5	65 000	480
Unilock 3R, 7, & 9			
Bolted 3R, 7, & 9			
3R, 3R/4/12, 4/4X (stainless)			
1, 3R, 3R/4/12, 4/4X (stainless)	0...5	25 000	600
Unilock 3R, 7, & 9	0...5	10 000	
Bolted 3R, 7, & 9			
3R, 3R/4/12, 4/4X (stainless)	6	18 000	
	7	25 000	
Combination Lighting Contactors with Circuit Breaker: Bulletin 503L			
Enclosure Type	**Lighting Contactor Rating [A]**	**Available Short Circuit Amperes RMS Symmetrical [A]**	**Maximum Voltage [V]**
1, 3R, 3R/4/12, 4/4X (stainless)	20...300	65 000	480
Unilock 3R, 7, & 9	20...300	65 000	
Bolted 3R, 7, & 9	20...300	65 000	
1, 3R, 3R/4/12, 4/4X (stainless)	20...300	25 000	600
Unilock 3R, 7, & 9	20...100	10 000	
Unilock 3R, 7, & 9	20...300		
Bolted 3R, 7, & 9	20...300		

AC Coil Data

NEMA Size	Operating Volt Amperes Burden [VA]		Heat Dissipation [W]	Coil Operating Limits
	60 Hz Coils			
	Inrush	Sealed		
00	70	8	2.7	85...110%
0	192	29	5.9	
1 & 1P	192	29	5.9	
2 (2...3 poles)	240	29	5.9	
2 (4...5 poles)	315	38	5.9	
3 (2...3 poles)	660	45	10	
3 (4...5 poles)	840	58	10	
4 (2...3 poles)	1225	69	14.8	
4 (4...5 poles)	1490	96	14.8	
5 (Series L)	1490	96	19.8	
6 (1)	4860	254	65.7	
6 (Interposing relay)	52.44	3.96	–	
7 (2)	Economized DC Coil		–	
7 (Interposing relay)	74.40	9.84	–	
8 (3)	Economized DC Coil		–	
8 (Interposing relay)	74.40	9.84	–	

(1) This rating is for the size 6 contactor coil only. All starters are shipped with an interposing relay as standard.
(2) Size 7 starters are shipped with a 250 VA control circuit transformer and an interposing relay with a 120V coil. Voltage is then rectified to DC for the contactor coil.
(3) Size 8 starters are shipped with a 350 VA control circuit transformer and an interposing relay with a 120V coil. Voltage is then rectified to DC for the contactor coil.

Auxiliary Contacts (NEMA A600 and P300) – Bulletin 595, 596

Maximum AC Contact Rating Per Pole						
AC Rating Designation	Maximum Voltage 60 Hz or 50 Hz	[A]		Continuous Carrying Current [A]	[VA]	
		Make	Break		Make	Break
A600	120	60	6	10	7200	720
	240	30	3	10	7200	720
	480	15	1.5	10	7200	720
	600	12	1.2	10	7200	720

Maximum DC Contact Rating Per Pole (Maximum Continuous Carrying Current is 5 A)			
DC Rating Designation	125V DC	250V DC	600V DC
P300	0.55 A	0.55 A (Requires 2 Contacts in Series)	–
	1.1 A (Requires 2 Contacts in Series)		

Load-life Curves

Bulletin 500 Line contactors and starters are designed to provide high performance in various applications. These load-life curves are based on Rockwell Automation tests according to the requirements defined in IEC 947-4. Actual contact life may vary based on the application, duty cycle, and environmental conditions from that indicated by the curves.
To find the contactor's estimated electrical life, follow these guidelines:

- Choose the appropriate graph that most closely approximates the utilization category of the application.
- Locate the intersection of the life-load curve of the appropriate contactor with the application's operational current (I_e) found on the horizontal axis.
- Read the estimated contact life in millions of operations along the vertical axis.

Contact Life for Mixed Utilization Categories AC3 and AC4

In many applications, the utilization category cannot be defined as either purely AC3 or AC4. In those applications, the electrical life of the contactor can be estimated from the following equation:

$$L_{mixed} = \frac{L_{AC3}}{1 + P_{AC4}\left(\frac{L_{AC3}}{L_{AC4}} - 1\right)}$$

Where:
L_{mixed}= Approximate contact life for a mixed AC3/AC4 utilization category application
L_{AC3}= Approximate contact life in operations for AC3 utilization category (from AC3 life-load curves below)
L_{AC4}= Approximate contact life in operations for AC4 utilization category (from AC4 life-load curves below)
P_{AC4}= Percentage of AC4 operations

Utilization Categories

Category Typical Duty:
AC3Starting of squirrel cage motors and switching off only after the motor is up to speed.
AC4Starting of squirrel cage motors with inching and plugging duty.

Bulletin 500 Load / Life Curves — AC3 and AC4

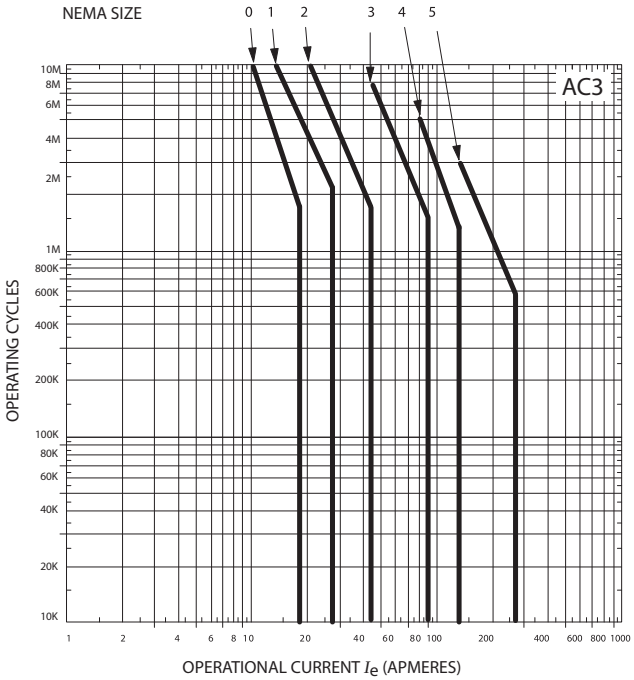

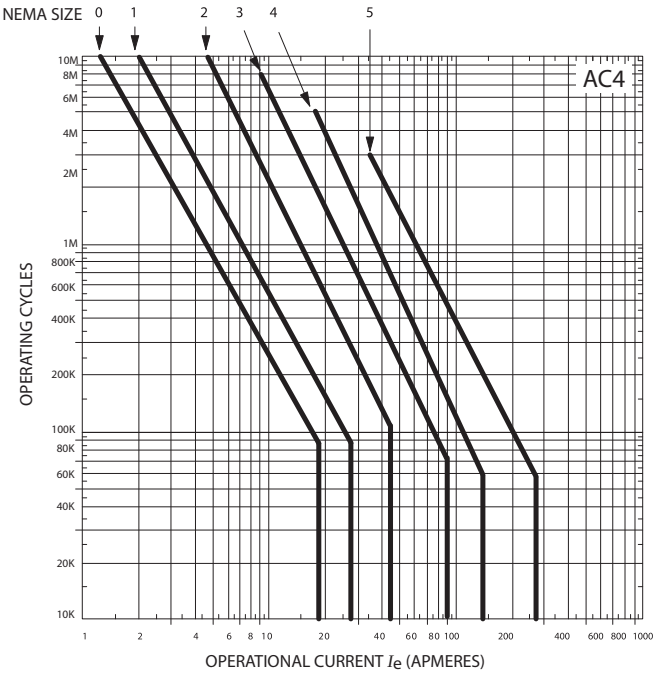

Approximate Dimensions

Approximate dimensions are shown in inches (millimeters). Dimensions are not intended for manufacturing purposes.

Bulletins 500 and 509 Contactors and Starters, 3-Pole

- Type 1 General Purpose Lift-Off Enclosure

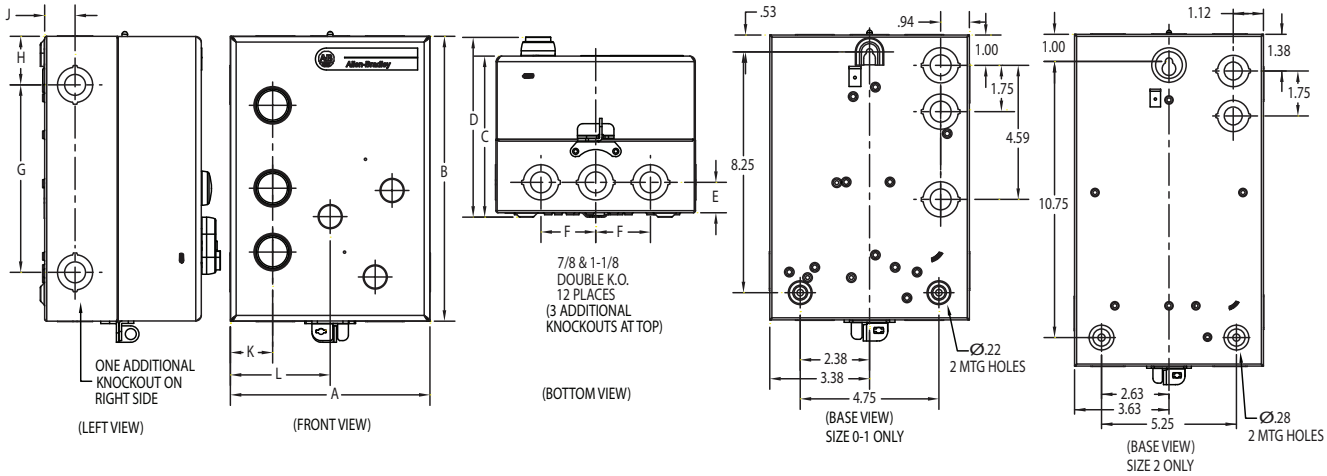

NEMA Size/ Current Rating	Dimensions in Inches (Millimeters)										
	A Width	B Height	C Depth	D	E	F	G	H	J	K	L
00...1	6.75 (171)	9.67 (246)	2.81 (71)	4.10 (104)	1.00 (25)	1.88 (48)	6.42 (163)	1.62 (41)	1.00 (25)	1.46 (37)	3.38 (86)
2	7.25 (184)	12.81 (325)	2.81 (71)	4.10 (104)	1.22 (31)	2.38 (60)	8.88 (226)	1.94 (49)	1.22 (31)	1.46 (37)	3.63 (92)

Bulletins 500, 505, 509, 520E, 520F, and 520G Contactors / Starters, 3-...5-Pole

- Type 1 Hinged Enclosure — with or without Control Transformer

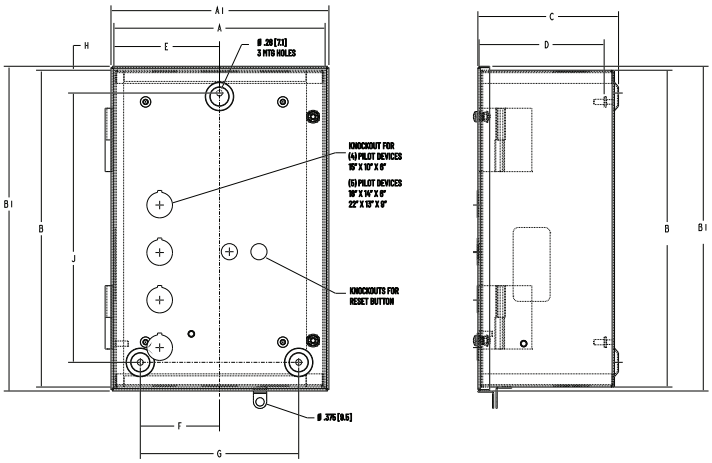

NEMA Size/ Current Rating	Bulletin No.	Dimensions in Inches (Millimeters)								
		A/A1 Width	B/B1 Height	C Depth	D	E Mounting	F Mounting	G Mounting	H	J (Mounting)
00...1	500 & 509	10.00 / 10.32 (254 / 264)	15.00 / 15.38 (381 / 390)	6.66 (169)	5.82 (148)	5.00 (127)	3.75 (95)	7.50 (191)	1.08 (27)	12.75 (324)
2	500 & 509 without transformer									
2	500 & 509 with transformer	14.00 / 14.32 (356 / 364)	18.00 / 18.38 (457 / 466)	6.66 (169)	5.83 (148)	7.00 (178)	5.75 (146)	11.50 (292)	1.00 (25)	15.75 (400)
0...1	505 & 520									
3	500 & 509	13.00 / 13.32 (330 / 338)	22.00 / 22.38 (559 / 568)	8.77 (223)	7.89 (201)	6.50 (165)	5.25 (133)	10.50 (267)	1.08 (27)	19.75 (502)
2	505 & 520									

Note: For Types 3R/12, 4/4X, 4X, and Bolted Type 7 & 9 and 3R, 7 & 9 dimensions, contact your local Rockwell Automation sales office or Allen-Bradley distributor.

Approximate dimensions are shown in inches (millimeters). Dimensions are not intended for manufacturing purposes.

Bulletins 500, 502, 503, 505, 506/X, 507/X, 509, 512/M/V, 513/M/V, 520E/F/G, 522E/F/G, and 523E/F/G

- Type 1 General Purpose Painted Enclosure

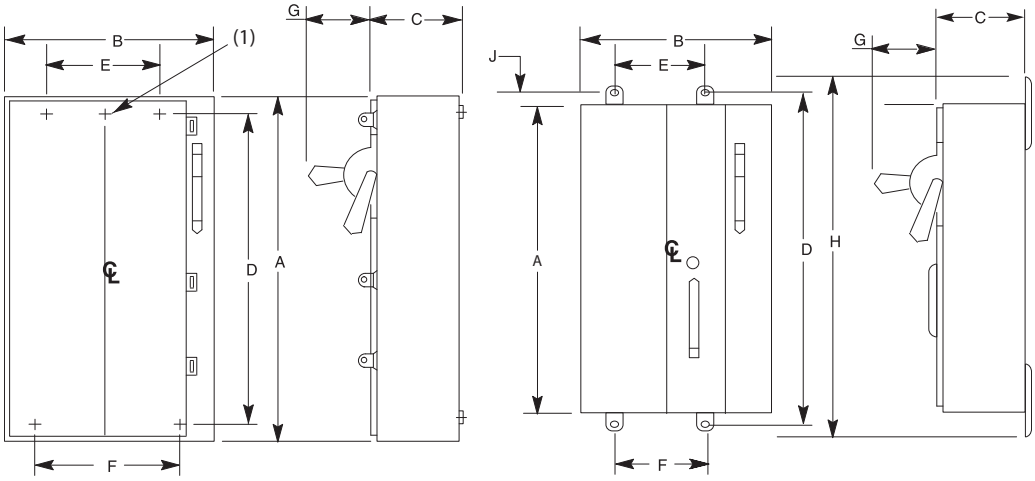

NEMA Size	Bulletin No.	Approximate Dimensions in Inches (Millimeters)							Approximate Shipping Weight [lb (kg)]
		A Height	B Width	C Depth	D Mounting	E Mounting	F Mounting	G Handle Depth	
0...2	506X, 507X	27.91 (709)	10.50 (267)	8.47 (215)	25.13 (639)	(1)	5.25 (133)	5.56 (141)	40 (18.14)
0...2	502, 503, 512, 513								
0...2	506, 507, 512M, 513M, 522E, 522F, 522G, 523E, 523F, 523G	30.40 (772)	20.5 (521)	9.78 (248)	27.63 (702)	15.25 (387)	15.25 (387)	5.56 (141)	90 (40.82)
3	502, 503, 505, 512, 513, 520E, 520F, 520G								
4	500, 503, 509, 513								
3	506, 507, 522E, 522F, 522G, 523E, 523F, 523G	50 (1270)	22 (559)	11.17 (284)	47.63 (1210)	15.25 (387)	15.25 (387)	5.56 (141)	250 (113.4)
4	505, 506, 507, 520E, 520F, 520G, 522E, 522F, 522G, 523E, 523F, 523G								
	502, 512								
5	500, 505, 509, 520E, 520F, 520G								
5	502, 503, 506, 506X, 507, 507X, 512, 513, 523E, 523F, 523G	56 (1422)	30.5 (775)	13.79 (350)	57.63 (1463)	20 (508)	25.25 (641)	7.62 (194)	360 (163.3)
6	500, 505, 509, 520E								
5	522E, 522F, 522G	60 (1524)	37.38 (949)	16.00 (406)	61.69 (1567)	33.88 (861)	33.88 (861)	7.62 (194)	420 (190.5)

(1) Sizes 0, 1, and 2 have one top-mounting hole that is located on the center line. Larger size enclosures have two top-mounting holes that are located as shown.

Approximate dimensions are shown in inches (millimeters). Dimensions are not intended for manufacturing purposes.

Bulletins 500, 505, 509, 520E, 520F, and 520G Contactors / Starters, 3-...5-Pole

- Type 3R/12 Rainproof, Dusttight, 4/4X Watertight, Non-metallic Enclosure — with or without Control Transformer

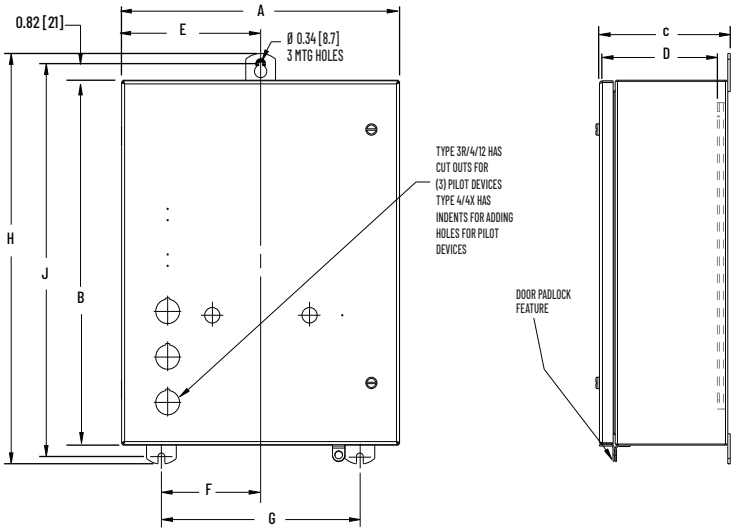

NEMA Size/ Current Rating	Bulletin No.	Approximate Dimensions in Inches (Millimeters)								
		A Width	B Height	C Depth	D	E Mounting	F Mounting	G Mounting	H	J Mounting
00...1	500 & 509	10.00 (254)	15.00 (381)	6.99 (177)	5.90 (150)	5.00 (127)	3.00 (76)	6.00 (152)	17.23 (438)	16.38 (416)
2	500 & 509 without transformer									
2	500 & 509 with transformer	14.00 (356)	18.00 (457)	6.59 (167)	5.90 (150)	7.00 (178)	5.00 (127)	10.00 (254)	20.23 (514)	19.38 (492)
0...1	505 & 520									
3	500 & 509	13.00 (330)	22.00 (559)	8.70 (220)	8.02 (204)	6.50 (165)	4.43 (113)	9.00 (229)	24.23 (615)	23.38 (594)
2	505 & 520									

Approximate dimensions are shown in inches (millimeters). Dimensions are not intended for manufacturing purposes.

Bulletins 500, 502, 503, 505, 506/X, 507/X, 509, 512/M/V, 513/M/V, 520E/F/G, 522E/F/G, and 523E/F/G

- Type 3R/4/12 Rainproof, Dusttight — Industrial Use Enclosures

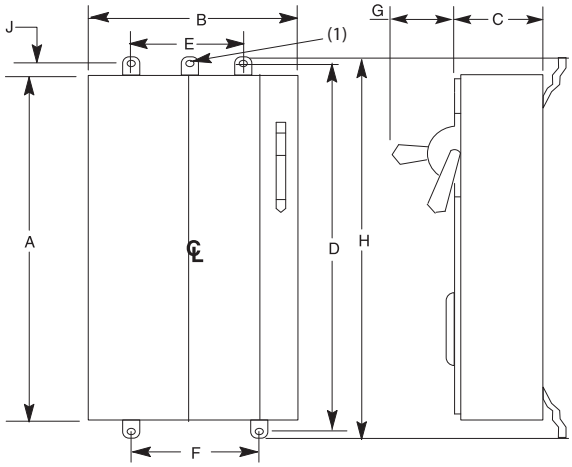

NEMA Size	Bulletin No.	Approximate Dimensions in Inches (Millimeters)									Approximate Shipping Weight [lb (kg)]
		A Height	B Width	C Depth	D Mounting	E Mounting	F Mounting	G Handle Depth	H	J	
0...2	506X, 507X	27.91 (709)	10.50 (267)	8.47 (215)	28.88 (733)	(1)	5.25 (133)	5.56 (141)	29.88 (759)	0.81 (21)	40 (18.14)
	502, 507, 503, 512, 513										
	506, 507, 512M, 513M, 522E, 522F, 522G, 523E, 523F, 523G	30.40 (772)	20.5 (521)	9.78 (248)	31.38 (797.05)	15.25 (387)	15.25 (387)	5.56 (141)	32.38 (822)	0.81 (21)	90 (40.82)
3	502, 507, 503, 505, 512, 513, 520E, 520F, 520G										
4	500, 509, 513										
3	506, 507, 522E, 522F, 522G, 523E, 523F, 523G	50 (1270)	22 (559)	11.17 (284)	51.38 (1305)	15.25 (387)	15.25 (387)	5.56 (141)	52.38 (1330)	0.71 (18)	250 (113.4)
4	502, 505, 507, 512, 520E, 520F, 520G, 522E, 522F, 522G, 523E, 523F, 523G										
5	500, 509, 520E, 520F, 520G										
5	502, 503, 506, 512, 513, 523E, 523F, 523G	56 (1422)	30.5 (775)	13.79 (350)	57.63 (313)	20 (508)	25.25 (641)	7.62 (194)	62.62 (1590)	1 (25.4)	360 (163.3)
6	500, 505, 509, 512 (2), 513, 520E										
6	512 (3)	60 (1524)	37.38 (949)	16 (906)	61.69 (1567)	33.88 (861)	33.88 (861)	7.62 (194)	63.5 (1613)	1.5 (38)	420 (190.5)
5	522E, 522F, 522G										
7	512, 513	84 (2134)	39.5 (1003)	18 (457)	—	—	—	7.62 (194)	—	—	650 (249.8)

(1) Sizes 0, 1, and 2 have one top-mounting hole that is located on the center line. All sizes in large enclosures have two top-mounting holes that are located as shown.
(2) Fusible disconnect switch with Class J fuses.
(3) Fusible disconnect switch with Class R fuses.

Approximate dimensions are shown in inches (millimeters). Dimensions are not intended for manufacturing purposes.

Bulletins 503, 505, 507, 509 and 513

- Unilock Enclosures — Type 3R, 7 & 9, Class I Groups C & D, Class II, Groups E, F & G — Divisions 1 & 2

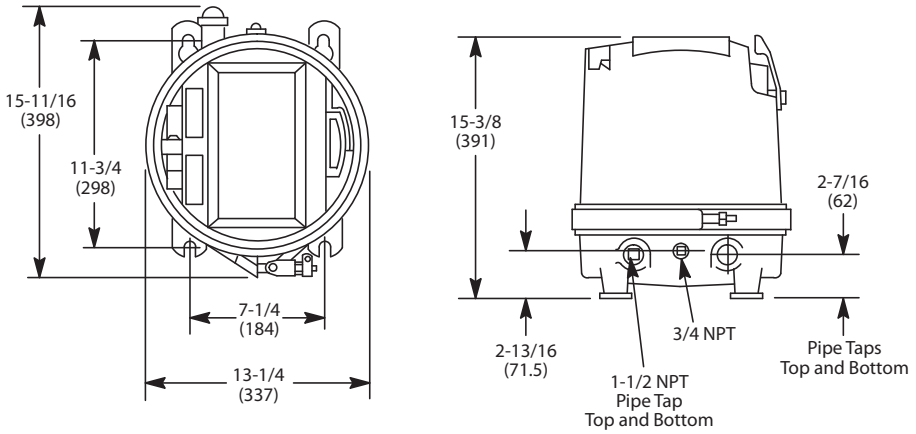

Sizes 0…2

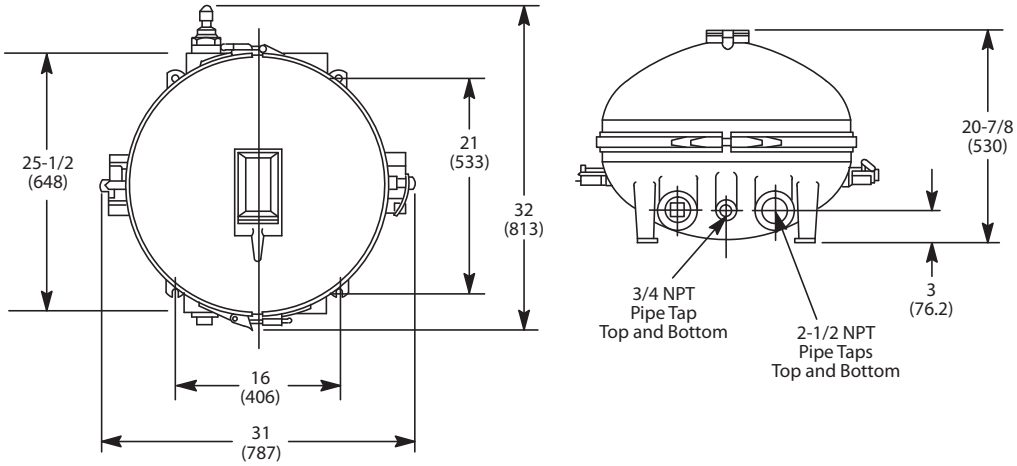

Sizes 3…5

Approximate dimensions are shown in inches (millimeters). Dimensions are not intended for manufacturing purposes.

Bulletins 505, 520E, 520F, 520G Starters

- Bolted Enclosures — Type 3R, 7 & 9, Class I, Groups C & D, Class II, Groups E, F & G — Divisions 1 & 2

NEMA Size	Bulletins 505, 520E		Bulletins 520F, 520G	
	with CCT (1)	without CCT (1)	with CCT (1)	without CCT (1)
0	Figure 1A	Figure 1A	Figure 1B	Figure 1B
1	Figure 1A	Figure 1A	Figure 1B	Figure 1B
2	Figure 1B	Figure 1B	Figure 1B	Figure 1B
3	Figure 1C	Figure 1B	Figure 1C	Figure 1C
4	Figure 1C	Figure 1C	Figure 1C	Figure 1C

(1) CCT = Control circuit transformer

Figure 1 A

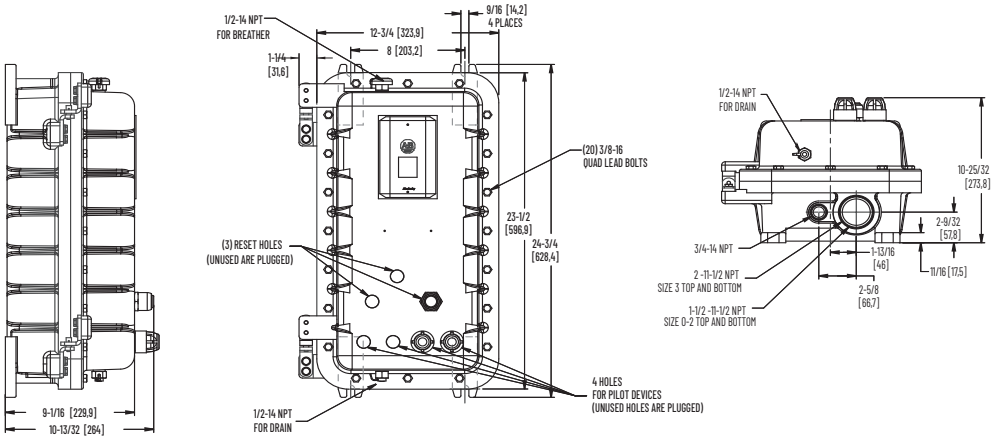

Figure 1 B

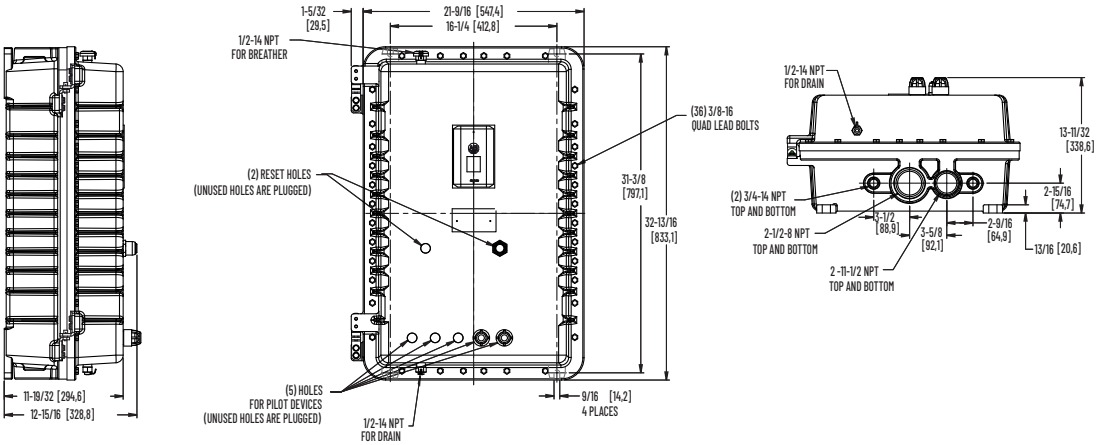

Figure 1 C

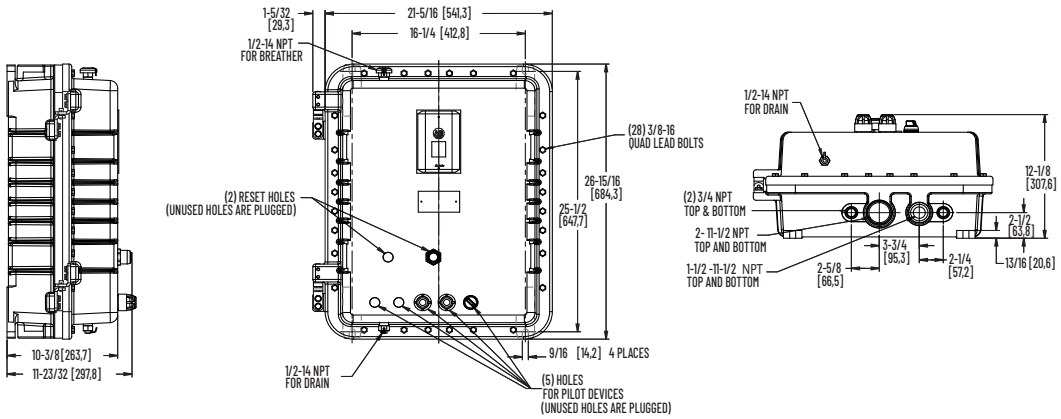

Approximate dimensions are shown in inches (millimeters). Dimensions are not intended for manufacturing purposes.

Bulletins 500 and 509 Contactors

- Bolted Enclosures — Type 3R, 7 & 9, Class I, Groups C & D, Class II, Groups E, F, & G — Divisions 1 & 2

NEMA Size	Bulletins 500 and 509	
	with CCT (1)	without CCT (1)
0	Figure 2C	Figure 2A
1	Figure 2C	Figure 2A
2	Figure 2C	Figure 2B
3	Figure 2D	Figure 2C
4	Figure 2E	Figure 2E
5	Figure 2F	Figure 2F

(1) CCT = Control circuit transformer

Figure 2 A

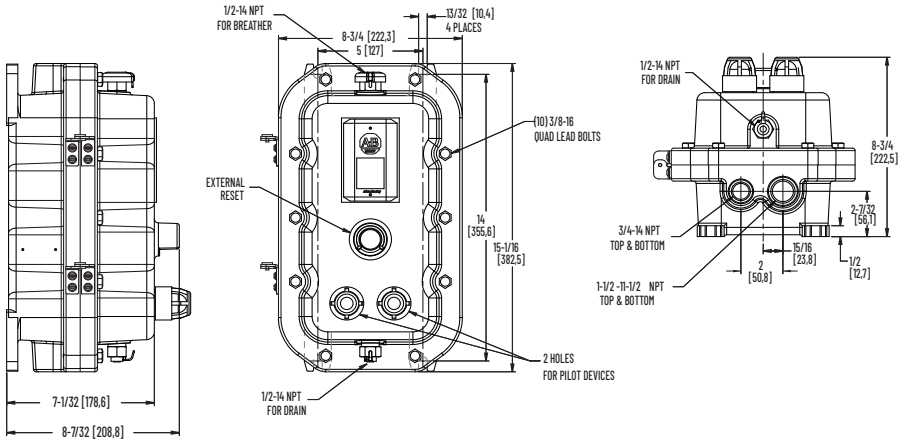

Figure 2 B

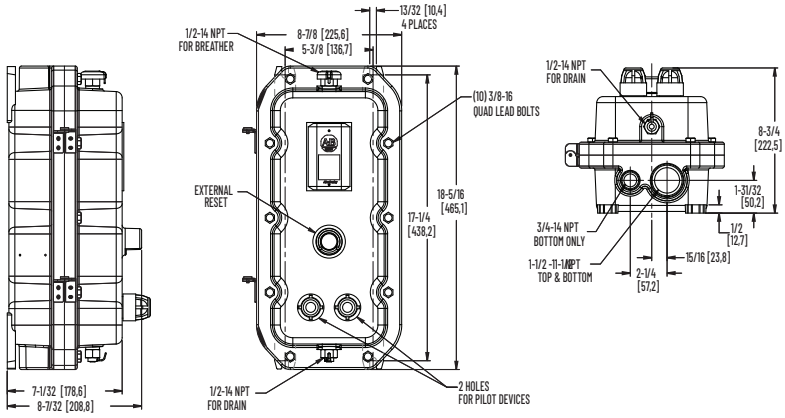

Figure 2 C

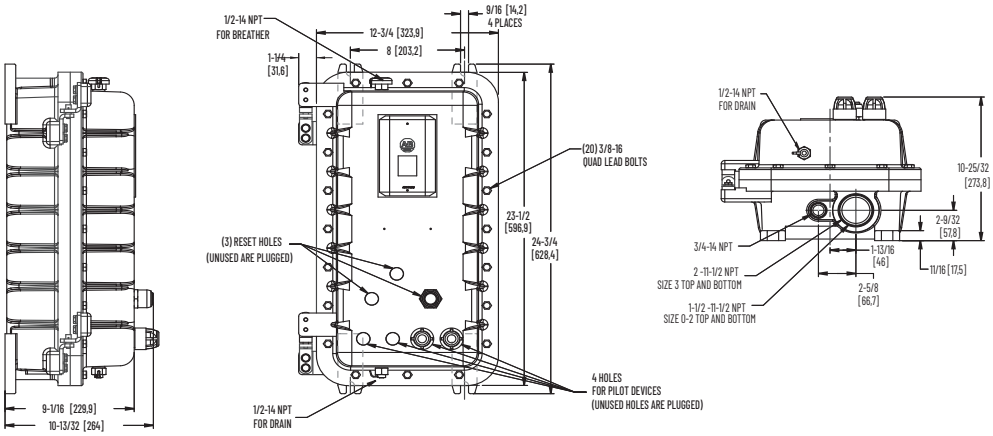

Approximate dimensions are shown in inches (millimeters). Dimensions are not intended for manufacturing purposes.

Bulletins 500 and 509 Contactors (Continued)

- Bolted Enclosures — Type 3R, 7 & 9, Class I, Groups C & D, Class II, Groups E, F, & G — Divisions 1 & 2

NEMA Size	Bulletins 500 and 509	
	with CCT (1)	without CCT (1)
0	Figure 2C	Figure 2A
1	Figure 2C	Figure 2A
2	Figure 2C	Figure 2B
3	Figure 2D	Figure 2C
4	Figure 2E	Figure 2E
5	Figure 2F	Figure 2F

(1) CCT = Control circuit transformer

Figure 2 D

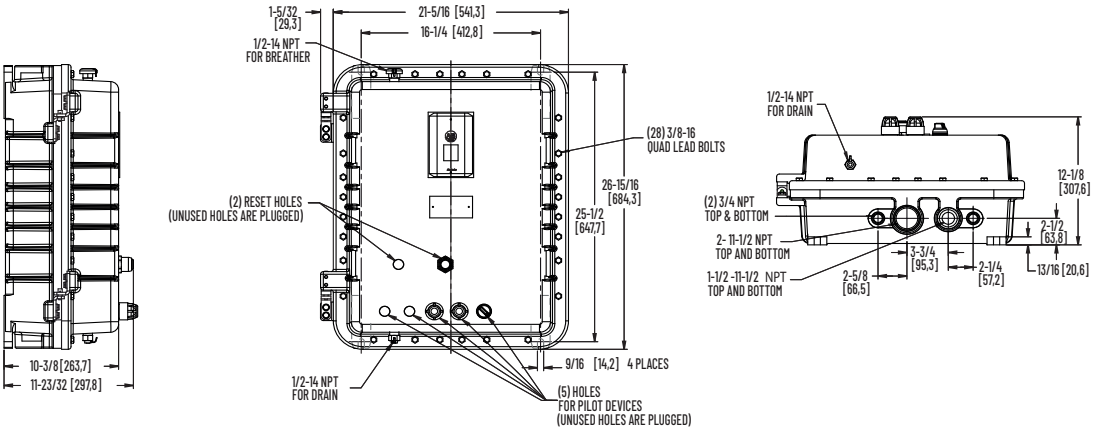

Figure 2 E

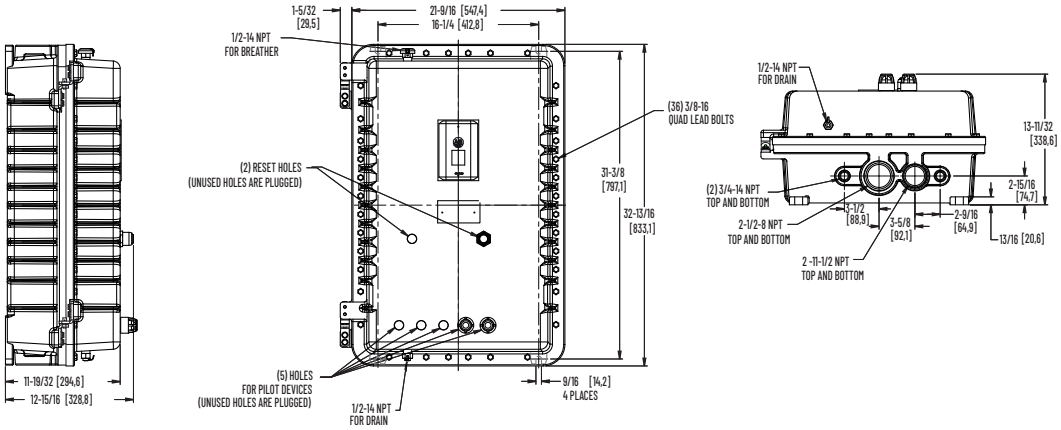

Figure 2 F

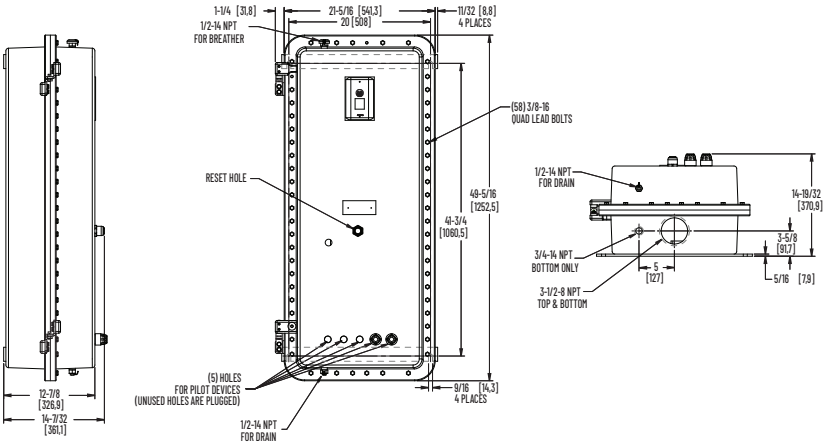

Approximate dimensions are shown in inches (millimeters). Dimensions are not intended for manufacturing purposes.

Bulletins 503, 507, 513 Starters

- Bolted Enclosures — Type 3R, 7 & 9, Class I, Groups C & D, Class II, Groups E, F, & G — Divisions 1 & 2

NEMA Size	Bulletins 503 and 513		Bulletin 507	
	with CCT (1)	without CCT (1)	with CCT (1)	without CCT (1)
0	Figure 3A	Figure 3A	Figure 3B (2)	Figure 3A
1	Figure 3A	Figure 3A	Figure 3B (2)	Figure 3A
2	Figure 3A	Figure 3A	Figure 3B	Figure 3B
3	Figure 3B	Figure 3B	Figure 3C	Figure 3C
4	Figure 3C	Figure 3C	Figure 3D	Figure 3D
5	Figure 3D	Figure 3D	—	—

(1) CCT = Control circuit transformer
(2) Figure 3A should be used for 80VA maximum transformers

Figure 3 A

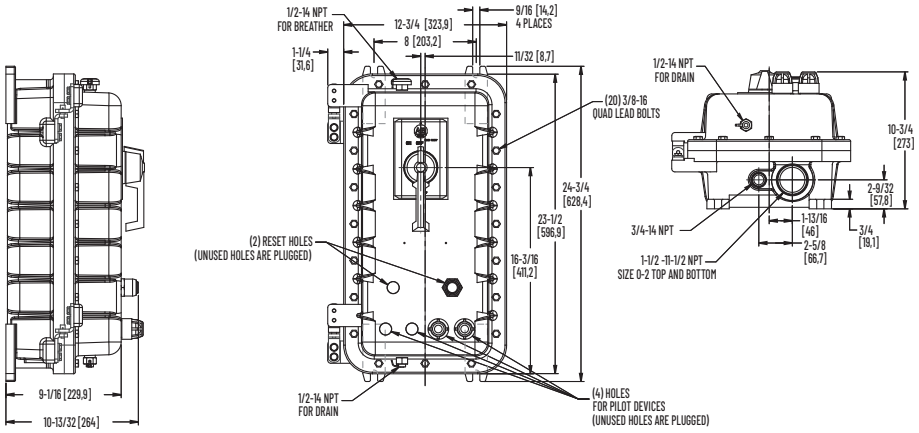

Figure 3 B

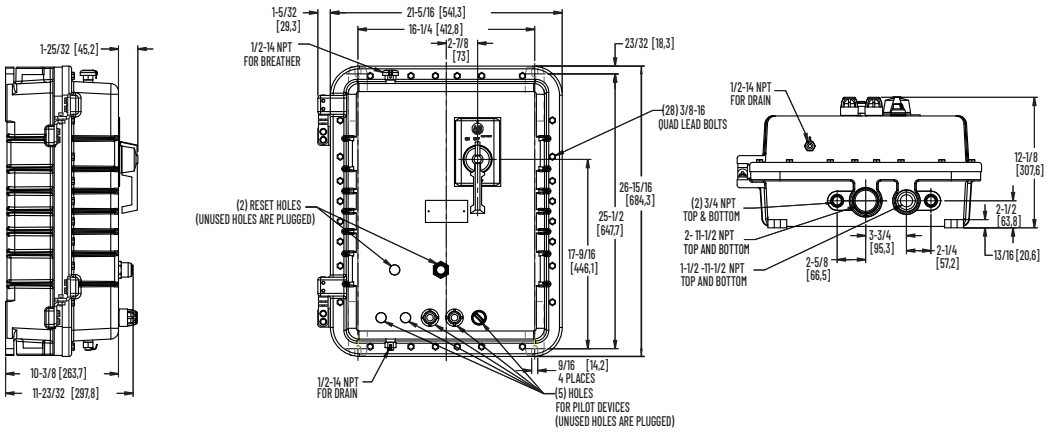

Approximate dimensions are shown in inches (millimeters). Dimensions are not intended for manufacturing purposes.

Bulletins 503, 507, 513 Starters (Continued)

- Bolted Enclosures — Type 3R, 7 & 9, Class I, Groups C & D, Class II, Groups E, F, & G — Divisions 1 & 2

NEMA Size	Bulletins 503 and 513		Bulletin 507	
	with CCT (1)	without CCT (1)	with CCT (1)	without CCT (1)
0	Figure 3A	Figure 3A	Figure 3B	Figure 3A
1	Figure 3A	Figure 3A	Figure 3B	Figure 3A
2	Figure 3A	Figure 3A	Figure 3B	Figure 3B
3	Figure 3B	Figure 3B	Figure 3C	Figure 3C
4	Figure 3C	Figure 3C	Figure 3D	Figure 3D
5	Figure 3D	Figure 3D	—	—

(1) CCT = Control circuit transformer

Figure 3 C

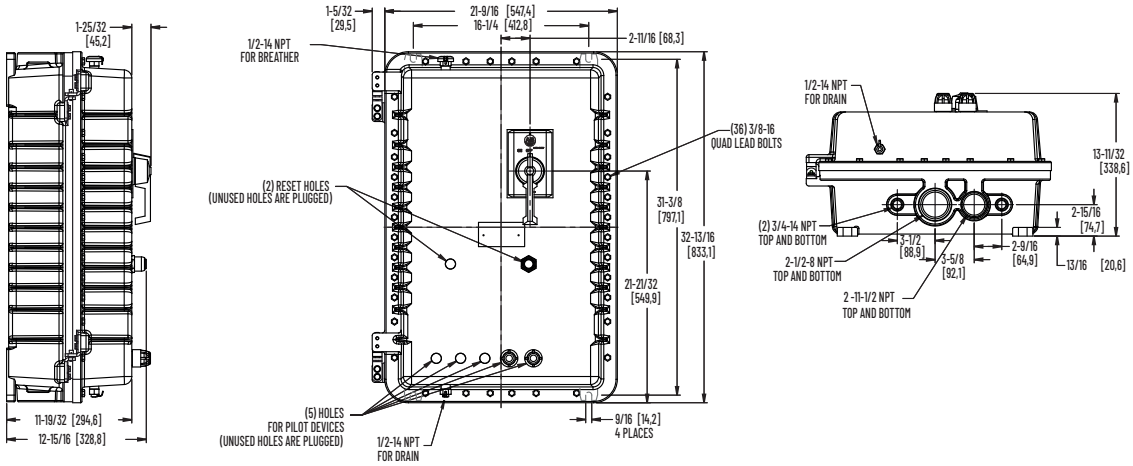

Figure 3 D

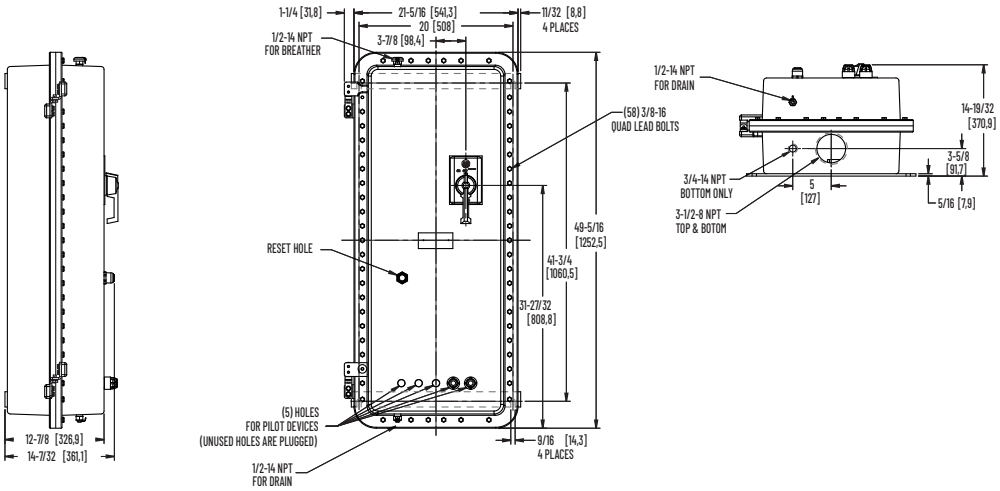

Additional Resources

These documents contain additional information concerning related products from Rockwell Automation. You can view or download publications at rok.auto/literature.

Resource	Description
Pump Panel Specifications, publication 1232-TD001	Provides specifications for Bulletin 1232 and 1233 pump panels.
Industrial Automation Wiring and Grounding Guidelines, publication 1770-4.1	Provides general guidelines for installing a Rockwell Automation industrial system.
Ethernet Reference Manual, ENET-RM002	Describes basic Ethernet concepts, infrastructure components, and infrastructure features.
UL Standards Listing for Industrial Control Products, publication CMPNTS-SR002	Assists original equipment manufacturers (OEMs) with construction of panels, to help ensure that they conform to the requirements of Underwriters Laboratories.
American Standards, Configurations, and Ratings: Introduction to Motor Circuit Design, publication IC-AT001	Provides an overview of American motor circuit design based on methods that are outlined in the NEC.
Industrial Components Preventive Maintenance, Enclosures, and Contact Ratings Specifications, publication IC-TD002	Provides a quick reference tool for Allen-Bradley industrial automation controls and assemblies.
Safety Guidelines for the Application, Installation, and Maintenance of Solid-state Control, publication SGI-1.1	Designed to harmonize with NEMA Standards Publication No. ICS 1.1-1987 and provides general guidelines for the application, installation, and maintenance of solid-state control in the form of individual devices or packaged assemblies incorporating solid-state components.
Industrial Automation Wiring and Grounding Guidelines, publication 1770-4.1	Provides general guidelines for installing a Rockwell Automation industrial system.
Product Certifications website, rok.auto/certifications.	Provides declarations of conformity, certificates, and other certification details.

Rockwell Automation Support

Use these resources to access support information.

Technical Support Center	Find help with how-to videos, FAQs, chat, user forums, Knowledgebase, and product notification updates.	rok.auto/support
Local Technical Support Phone Numbers	Locate the telephone number for your country.	rok.auto/phonesupport
Technical Documentation Center	Quickly access and download technical specifications, installation instructions, and user manuals.	rok.auto/techdocs
Literature Library	Find installation instructions, manuals, brochures, and technical data publications.	rok.auto/literature
Product Compatibility and Download Center (PCDC)	Download firmware, associated files (such as AOP, EDS, and DTM), and access product release notes.	rok.auto/pcdc

Documentation Feedback

Your comments help us serve your documentation needs better. If you have any suggestions on how to improve our content, complete the form at rok.auto/docfeedback.

Allen-Bradley, expanding human possibility, and Rockwell Automation are trademarks of Rockwell Automation, Inc.
EtherNet/IP is a trademark of ODVA, Inc.
Trademarks not belonging to Rockwell Automation are property of their respective companies.

Rockwell Automation maintains current product environmental compliance information on its website at rok.auto/pec.

Rockwell Otomasyon Ticaret A.Ş. Kar Plaza İş Merkezi E Blok Kat:6 34752, İçerenköy, İstanbul, Tel: +90 (216) 5698400 EEE Yönetmeliğine Uygundur

Connect with us.

rockwellautomation.com — expanding **human possibility**®

AMERICAS: Rockwell Automation, 1201 South Second Street, Milwaukee, WI 53204-2496 USA, Tel: (1) 414.382.2000, Fax: (1) 414.382.4444
EUROPE/MIDDLE EAST/AFRICA: Rockwell Automation NV, Pegasus Park, De Kleetlaan 12a, 1831 Diegem, Belgium, Tel: (32) 2 663 0600, Fax: (32) 2 663 0640
ASIA PACIFIC: Rockwell Automation, Level 14, Core F, Cyberport 3, 100 Cyberport Road, Hong Kong, Tel: (852) 2887 4788, Fax: (852) 2508 1846
UNITED KINGDOM: Rockwell Automation Ltd. Pitfield, Kiln Farm Milton Keynes, MK11 3DR, United Kingdom, Tel: (44)(1908) 838-800, Fax: (44)(1908) 261-917

Publication 500-TD014D-EN-P - March 2023
Supersedes Publication 500-TD014C-EN-P - March 2017

Copyright © 2023 Rockwell Automation, Inc. All rights reserved. Printed in the U.S.A.