Installation Instructions

LD-Series Brushless Servo Motor

(Catalog Number LD-2003-K-H00AA, LD-2003-K-H04AA, LD-3009-L-H00AA, LD-3009-L-H04AA, LD-4012-L-H00AA, LD-4012-L-H04AA, LD-4030-O-H00AA, and LD-4030-O-H04AA)

These installation instructions describe how to install the LD-Series motors. Use this document if you are responsible for designing, installing, or troubleshooting the Allen-Bradley LD-Series motor products. Read all instructions before installing this motor.

For:	See Page
Receiving and Maintenance Information	2
Motor Catalog Number Identification	2
Before You Install the Motor	3
Using Couplings and Pulleys	3
Preventing Electrical Noise	4
Building and Installing Cables	5
Installing Your Motor	6
Guidelines for Installation	7
Mounting Dimensions	8
Connector Data	10
Motor Load Force Ratings	11
Radial Load and Axial Load Force Ratings	11
Cables and Connector Kits	12
Shaft Seal Kits	13

Publication LD-IN001A-EN-P — September 2000

Receiving and Maintenance Information

The customer is responsible for inspecting the equipment before accepting the shipment from the freight company. Check the item(s) you receive against your purchase order.

Maintain your motor within the following environmental conditions:

- in a clean, dry location
- within the operating temperature range, 0° to 40° C (32° to 104° F)
- within the storage temperature range, -30° to 70° C (-22° to 158° F)
- within the relative humidity range, 5% to 95% non-condensing
- in an non-corrosive atmosphere

Motor Catalog Number Identification

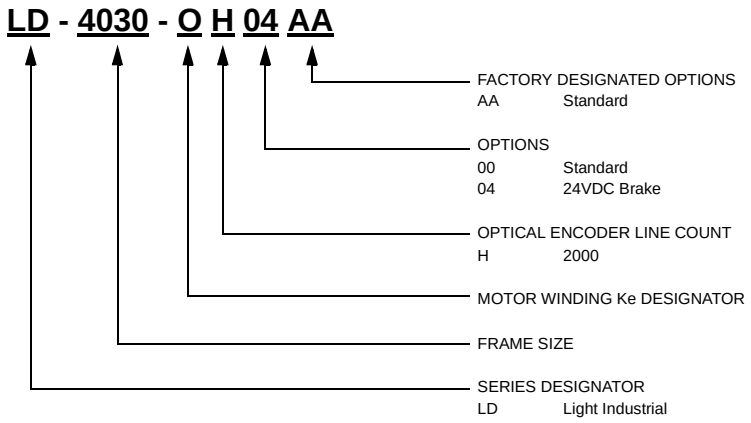

Before You Install the Motor

1. Remove the motor carefully from its shipping container.

2. Visually inspect the motor for any damage.

3. Examine the motor frame, front output shaft, and mounting pilot for any defects.

4. Notify the carrier of any shipping damage immediately.

ATTENTION

Do not open or attempt to open the motor.

Only a qualified Allen-Bradley employee can service this type of motor

Failure to observe these safety procedures could result in the equipment being damaged.

Using Couplings and Pulleys

Mechanical connections to the motor shaft, such as couplings and pulleys, require a torsionally rigid coupling or a reinforced timing belt. The high dynamic performance of servo motors can cause couplings, pulleys or belts to loosen or slip over time. A loose or slipping connection will cause system instability and may damage the motor shaft. All connections between the system and the servo motor shaft must be rigid to achieve acceptable response from the system. Periodically inspect connections to verify their rigidity.

When mounting couplings or pulleys to the motor shaft, ensure that the connections are properly aligned and that axial and radial loads are within the specifications of the motor. Refer to *Motor Load Force Ratings* on page 11 for guidelines on how to achieve 20,000 hours of motor bearing life.

Preventing Electrical Noise

ElectroMagnetic Interference (EMI), commonly called noise, may adversely impact motor performance by inducing stray signals. Effective techniques to counter EMI include filtering the AC power, shielding and separating signal carrying lines, and practicing good grounding techniques.

Effective AC power filtering can be achieved by using isolated AC power transformers or properly installed AC line filters.

To help avoid EMI:

1. Physically separate signal lines from motor cabling and power wiring. Do not route signal wires with motor and power wires, or over the vent openings of servo drives.

2. Ground all equipment using a single-point parallel ground system that employs ground bus bars or large straps. If necessary, use additional electrical noise reduction techniques to reduce EMI in noisy environments.

Building and Installing Cables

Knowledgeable cable routing and careful cable construction improves system ElectroMagnetic Compatibility (EMC).

To build and install cables, perform the following steps:

1. Keep wire lengths as short as physically possible.

2. Route signal cables (encoder, serial, analog) away from motor and power wiring.

3. Separate cables by 0.3 m (1 ft) minimum for every 9 m (30 ft) of parallel run.

4. Ground both ends of the encoder cable shield and twist the signal wire pairs to prevent electromagnetic interference (EMI) from other equipment.

ATTENTION

High voltage can be present on the shield of a power cable, if the shield is not grounded.

Ensure there is a connection to ground for any power cable shield.

Failure to observe these safety procedures could result in personal injury or damage to equipment.

Installing Your Motor

All motors include a mounting pilot for aligning the motor on a machine. Preferred fasteners are stainless steel. The installation must comply with all local regulations and use of equipment and installation practices that promote electromagnetic compatibility (EMC) and safety.

ATTENTION

Unmounted motors, disconnected mechanical couplings, and/or disconnected cables are dangerous if power is applied.

Disassembled equipment should be appropriately identified (tagged-out) and access to electrical power restricted (locked-out).

Failure to observe these safety procedures could result in personal injury

Guidelines for Installation

Observe the following for installing the motor.

1. Allow sufficient clearances in the area of the motor for it to stay within its specified operating temperature range. Refer to *Receiving and Maintenance Information* on page 2 for operating range. Do not enclose the motor unless forced air is blown across the motor for cooling. A fan blowing air across the motor will improve its performance. Keep other heat producing devices away from the motor.

2. Refer to *Mounting Dimensions* on page 8 to determine the mounting dimensions of your motor.

3. Place the motor with connectors pointing downward.

4. Properly mount and align the motor.

5. Attach all power and encoder cables after the motor is mounted and use a drip loop in the cable to keep liquids flowing away from the connectors.

ATTENTION

Outer surfaces of motor can reach high temperatures, 100° C (212° F) during motor operation.

Take precautions to prevent accidental contact with hot surfaces. Consider motor surface temperature when selecting motor mating connections and cables.

Failure to observe these safety procedures could result in personal injury or damage to equipment.

Mounting Dimensions

The dimension symbols and actual dimensions of the different models in the LD-Series are referenced in a table on the next page.

Figure 1
Reference for Mounting Dimensions

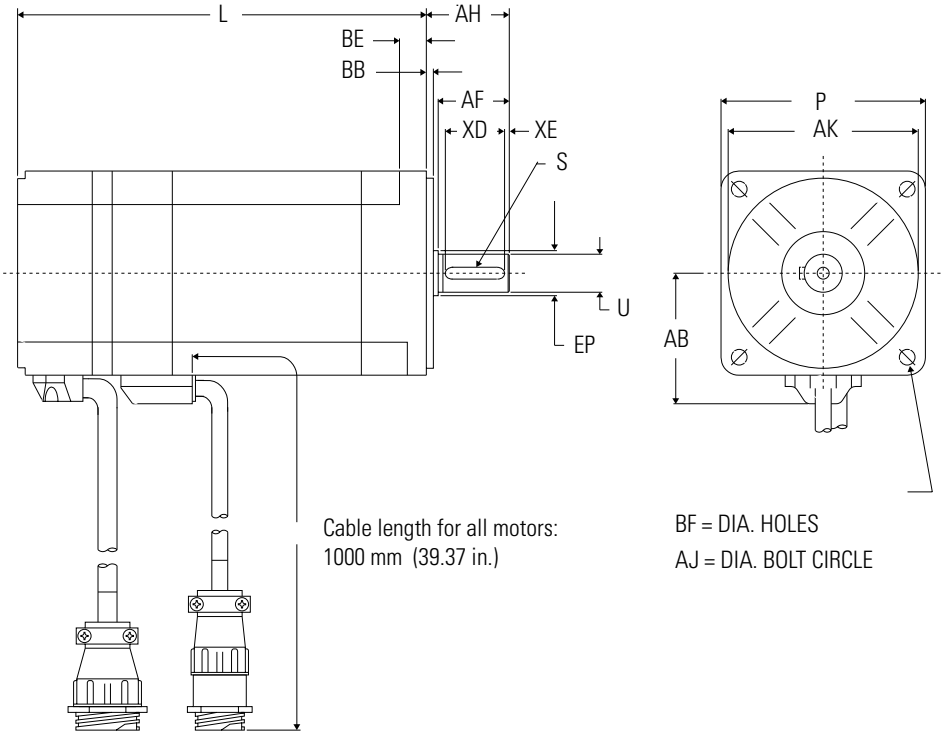

Dimension Symbol [1] (Refer to drawing)		**Motor**			
		LD-2003	**LD-3009**	**LD-4012**	**LD-4030**
AB	mm	38	50	55	55
	(in.)	(1.5)	(1.97)	(2.16)	(2.16)
AF	mm	20	25	30	30
	(in.)	(0.78)	(0.98)	(1.18)	(1.18)
AH	mm	24	30	35	35
	(in.)	(0.94)	(1.18)	(1.38)	(1.38)
AJ	mm	60	90	100	100
	(in.)	(2.36)	(3.54)	(3.94)	(3.94)
AK	mm	50	70	80	80
	(in.)	(1.97)	(2.76)	(3.15)	(3.15)
BB	mm	2.5	3.0	3.0	3.0
	(in.)	(0.10)	(0.12)	(0.12)	(0.12)
BE	mm	5	8	8	8
	(in.)	(0.2)	(0.31)	(0.31)	(0.31)
BF	mm	4.5	5.5	6.6	6.6
	(in.)	(0.18)	(0.22)	(0.26)	(0.26)
EP	mm	12	16	19	19
	(in.)	(0.47)	(0.63)	(0.75)	(0.75)
L	mm	86	103	116	172
	(in.)	(3.38)	(4.05)	(4.57)	(6.77)
L with Brake	mm	115	130	156	212
	(in.)	(4.53)	(5.12)	(6.14)	(8.35)
P	mm	54	76	86	86
	(in.)	(2.13)	(2.99)	(3.39)	(3.39)
S	mm	3 x 3	5 x 5	5 x 5	5 x 5
	(in.)	(0.12 x 0.12)	(0.2 x 0.2)	(0.2 x 0.2)	(0.2 x 0.2)
U	mm	8	14	16	16
	(in.)	(0.31)	(0.55)	(0.63)	(0.63)
XD	mm	12	20	25	25
	(in.)	(0.47)	(0.79)	(0.99)	(0.99)
XE	mm	2	2	2	2
	(in.)	(0.08)	(0.08)	(0.08)	(0.08)

[1] LD-Series motors are designed to metric dimensions. Imperial measurements are mathematical conversions.

Connector Data

The tables below list the signal descriptions for the encoder and power connector pins.

Encoder Connector	
Pin	**Signal**
1 - 8, 25-28	Open
9	A+
10	A-
11	B+
12	B-
13	I+
14	I-
15	HALL A+
16	HALL A-
17	HALL B+
18	HALL B-
19	HALL C+
20	HALL C-
21	Open
22	+5 VDC
23	COM [1]
24	Shield [2]

[1] +5V COM not connected to motor case ground.

[2] Cable Shield connected to motor case ground.

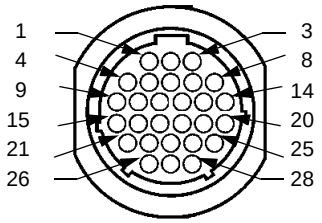

Power Connector	
Pin	**Signal**
1	Phase R [1]
2	Phase S [1]
3	Phase T [1]
4	Open
5	Ground
6	Open
7	Brake+ [2]
8	Open
9	Brake- [2]

[1] Cables and drives may label the R, S and T power phases as U, V and W respectively.

[2] Open on non-brake motors.

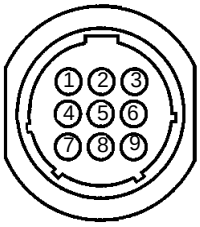

Power housing: AMP 206705-2
BR+, BR- pin contacts: AMP 66102-8
R, S, T and Ground pin contacts: AMP 66098-8

Encoder housing: AMP 206152-1
Pin contacts: AMP 3-66507-0

Motor Load Force Ratings

Motors are capable of operating with sustained maximum radial or maximum axial shaft loads. The measurement points for maximum radial and axial load forces are shown in the figure below.

Figure 2
Load Forces on Shaft

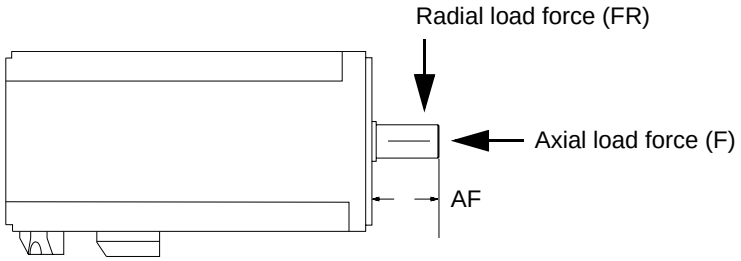

Radial load force (FR) applied to shaft at 2AF/3.

The following table represents load factors that provide a 20,000 hour L10 bearing fatigue life for LD-Series motors. These load factors do not account for possible application-specific life reduction factors that may occur, such as bearing grease contamination from external sources.

Radial Load and Axial Load Force Ratings

Motor	Maximum Radial (FR) Load		Maximum Axial (F) Load with Radial Load		Maximum Axial (F) Load with Zero Radial Load	
	kg	(lb)	kg	(lb)	kg	(lb)
LD-2003	15	(33)	3.5	(7.5)	8	(17)
LD-3009	20	(44)	4.4	(9.7)	10	(22)
LD-4012	35	(77)	8.8	(19.4)	20	(44)
LD-4030	35	(77)	8.8	(19.4)	20	(44)

Cables and Connector Kits

Factory manufactured cables are available in standard cable lengths. They can provide environmental sealing and shield termination. The following cables are for connecting the LD-Series motors.

Catalog Number	Description
9101-1375-*XXX* [1]	Cable, Encoder Feedback to ULTRA 100 or ULTRA 200 Drive (with encoder and drive mating connectors)
9101-1385-*XXX* [1]	Cable, Motor Power to Drive (with motor connector and pigtail to drive terminals)
9101-1786-*XXX* [2]	Cable, Encoder Feedback to Ultra3000 or Ultra5000 Drive (with encoder and 45° drive mating connector)
9106-0066	Connector Kit (kit includes connector, pins and backshell for both the power and encoder connectors)

[1] The last three digits (*XXX*) indicate a standard cable length:
010 = 3 m (10 ft)
025 = 7 m (25 ft)
050 = 15 m (50 ft)
075 = 23 m (75 ft)

[2] The last three digits (*XXX*) indicate a standard cable length:
001 = 1 m (3.3 ft)
003 = 3 m (10 ft)
009 = 9 m (30 ft)
015 = 15 m (50 ft)
030 = 30 m (100 ft)

Shaft Seal Kits

Shaft seal part numbers and ordering information is provided below.

Motor Series	Manufacturer Part Number [1]	
LD-2003	4720	[1] Shaft seals must be purchased from manufacturer: CR Services, 735 Tollgate Road, Elgin, IL 60123 Tel: 1-800-882-0008, Fax: 1-800-526-7268 www.chicago-rawhide.com
LD-3009	6420	
LD-4012	7220	
LD-4030	7220	

Note: Shaft seals require a lubricant to reduce wear. Lubricant is provided with kit.

Notes:

For more information refer to our web site: www.ab.com/motion

www.rockwellautomation.com

Power, Control and Information Solutions Headquarters

Americas: Rockwell Automation, 1201 South Second Street, Milwaukee, WI 53204-2496 USA, Tel: (1) 414.382.2000, Fax: (1) 414.382.4444
Europe/Middle East/Africa: Rockwell Automation, Vorstlaan/Boulevard du Souverain 36, 1170 Brussels, Belgium, Tel: (32) 2 663 0600, Fax: (32) 2 663 0640
Asia Pacific: Rockwell Automation, Level 14, Core F, Cyberport 3, 100 Cyberport Road, Hong Kong, Tel: (852) 2887 4788, Fax: (852) 2508 1846

Publication LD-IN001A-EN-P — September 2000 PN 0013-1032-001

© 2000 Rockwell International Corporation. Printed in the U.S.A.