Selection Guide

Allen-Bradley

Control Circuit and Load Protection Products

Bulletin Numbers 188, 1489, 1492, 1692

LISTEN.
THINK.
SOLVE.®

Allen-Bradley • Rockwell Software

Rockwell Automation

Circuit Protection Portfolio

1489-M Circuit Breakers
Approved for branch circuit protection in the United States and Canada, and certified as Miniature Circuit Breakers for IEC applications.

1492-SP Supplementary Protectors
Overcurrent protection for equipment where branch circuit protection is already provided, or is not required. Also Miniature Circuit Breakers as defined by IEC Standards.

1492-D Circuit Breakers
Overcurrent and short circuit protection for higher voltage DC circuits. Also Miniature Circuit Breakers as defined by IEC Standards.

188-J 10 kA Regional Circuit Breakers
Protective devices applied at the equipment level. Regional certifications only. Available for purchase in China and Europe.

188-K 6 kA Regional Circuit Breakers
Protective devices applied at the equipment level. Regional certifications only. Available for purchase in China and Europe.

Rockwell Automation offers a wide range of Allen-Bradley circuit protection products designed for a variety of applications.

Miniature Circuit Breakers, Supplementary Protectors, and Residual Current Devices

Product	Certifications						Poles						Trip											
	cULus	cURus	CSA	CE	VDE	CCC	1	1+N	2	3	3+N	4	B	C	D	0.2	0.5	0.8	1	1.2	1.5	1.6	2	2.5
1489-M	●		●	●	●	●	●		●	●				●	●		●		●			●	●	
1492-SP		✪	●	●	●	●	●	♣	●	●	♣		●	●	●		●		●				●	
1492-D		✪	●	●	●		●		●					●			●		●			●	●	
188-J,-K				●	●	●	●	●	●	●	●	●	●	●	●		●		●				●	
1492-RCD		●		●	●	●			●			●												
1492-MC	●		●				●		●	●														
1492-GH,-GS		●	●	●	●		●		●	●						●	●	●	●	●	●		●	●

✪ UL Recognized only.
♣ 1+N and 3+N devices are not cURus or CSA certified.

Electronic Circuit Protectors

Product	Certifications				Circuits		Output Current Rating [A]							
	cULus	CE	C1D2	NEC C2	4	2x2	1	2	3	4	6	10	3/6	6/12
1692	●	●	●	●	●	●	●	●	●	●	●	●	●	●

1492-RCD Residual Current Devices
By detecting small leakage currents and disconnecting all ungrounded connectors quickly, RCDs can prevent injury to exposed personnel and damage to equipment.

1692 Electronic Circuit Protectors
Protection for secondary circuits of 24V DC switched mode power supplies. These modules monitor both supply voltage and load currents, and can be monitored and controlled locally and remotely.

1492-MC Circuit Breakers and Ground Fault Protectors
Thermal magnetic circuit protection and sensing thresholds for personnel and equipment protection.

1492-GH, -GS High-density Supplementary Protectors
Thermal magnetic circuit breakers with a high density design useful when DIN Rail space is a premium.

1492-FB Fuse Holders
Designed for use in many OEM applications. Provides safe and convenient installation of Midget, Class CC, and Class J fuses.

- Test equipment
- Automotive systems
- Controller I/O points
- Power supplies
- Relay and contractor coils
- Medical equipment
- Control instrumentation
- Computers
- Solenoids
- Transformers

Rated Current [A]																									
3	4	5	6	7	8	10	12	13	15	16	20	25	30	32	35	40	45	50	55	60	63	70	80	90	100
●	●	●	●	●	●	●		●	●	●	●	●	●	●	●	●		●		●	●				
●	●	●	●	●	●	●		●	●	●	●	●	●	●		●		●			●				
●	●		●		●	●		●		●	●	●		●		●		●			●				
●	●		●		●	●		●		●	●	●		●		●		●			●				
												●				●					●		●		
						●			●		●	●	●		●	●	●	●	●	●		●	●	●	●
●	●	●	●	●	●	●	●		●	●	●	●													

Typical North America Current Ratings: 0.5, 1, 2, 3, 4, 5, 6, 7, 8, 10, 15, 20, 25, 30, 40, 50, 60, 63 A.
Typical IEC Current Ratings: 0.5, 1, 1.6, 2, 3, 4, 6, 8, 10, 13, 16, 20, 25, 32, 40, 50, 63 A.

Fuse Holders

Product	Certifications			Poles			Indication			Fuse Types			
	cULus	CSA	CE	1	2	3	none	L	D1	M30	C30	J30	J60
1492-FB	●	●	●	●	●	●	●	●	●	●	●	●	●

Table of Contents

1489-M
Circuit Breakers

1489-M Circuit Breakers 5

Product Selection 7

Specifications 10

Accessories 16

1492-SP Supplementary Protectors 23

Product Selection 25

Specifications 30

Accessories 36

1492-D DC Circuit Breakers 45

Product Selection 47

Specifications 48

Accessories 52

188 Regional Circuit Breakers 61

Product Selection 63

Specifications 66

Accessories 72

1492-RCD Residual Current Devices 85

Product Selection 87

Specifications 88

Accessories 90

1692 Electronic Circuit Protectors 95

Product Selection 97

Specifications 98

1492-MC Branch and Ground Fault Circuit Breakers 99

Product Selection 101

Accessories 102

Specifications 103

1492-GH, -GS High-density Supplementary Protectors 109

Product Selection 111

Specifications 112

1492-FB Fuse Holders 115

Product Selection 117

Accessories 117

Specifications 118

1492-D
Circuit Breakers

1492-RCD
Residual Current
Devices

1492-MC
Branch and
Ground Fault
Circuit Breakers

1492-FB
Fuse Holders

1492-SP
Supplementary
Protectors

188-J, -K
Regional
Circuit Breakers

1692
Electronic Circuit
Protectors

1492-GH, -GS
High-density
Supplementary
Protectors

1489-M Circuit Breakers

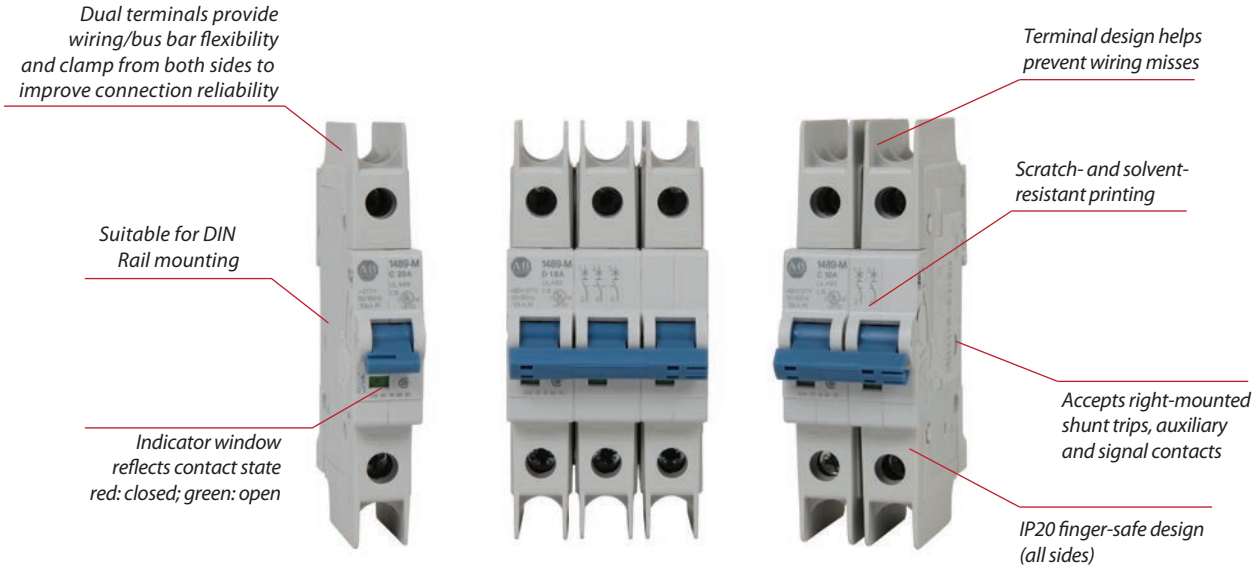

Bulletin 1489-M thermal-magnetic Circuit Breakers are approved for branch circuit protection in the United States and Canada, and are certified as Miniature Circuit Breakers for IEC applications.

These branch protectors are compatible with many accessories to meet diverse application needs, including UL 508 Listed bus bars for convenience in panel assembly, auxiliary contacts, signal contacts and shunt trips for versatility, and lockout attachments for safety during maintenance.

Features

- Current limiting
- Fast breaking time
- High rated voltage
- Dual terminals provide a more secure connection of up to four wires, or two wires and a bus bar
- Superior shock and vibration resistance to help prevent nuisance tripping
- Terminal design helps prevent wiring misses by directing wires into the terminal openings, even while tightening
- Reversible line and load connections
- Single and multi-pole toggle mount lock out attachments available for Lockout/Tagout (LOTO)
- RoHS compliant and fully recyclable device
- Suitable for extreme ambient conditions

1489-M Circuit Breakers	
Rated Voltage	UL/CSA: Max. 480Y/277V AC IEC: U_e 230/400V AC
Interrupting Capacity	UL/CSA: 10 kA IEC: 15 kA
Current Ratings	0.5...63 A
Poles	1, 2, 3
Trip Curves	C, D
Standards Compliance	UL 489 CSA C22.2 No. 5.1 EN 60947-2 GB 14048.2
Certifications	UL Listed, File No. E197878 CSA Certified, File No. 259391 CE Marked VDE Certified CCC Certified RoHS Compliant

Catalog Number Explanation

Note: Examples given in this section are for reference purposes. This basic explanation should not be used for product selection; some combinations may not produce a valid catalog number.

1489	-	M	1	C	005
		a	*b*	*c*	*d*

a

Voltage Type	
Code	**Description**
M	AC Circuit Breaker

b

Poles	
Code	**Description**
1	1-Pole
2	2-Pole
3	3-Pole

c

Trip Curve	
Code	**Trip Curve**
C	Trip Curve C
D	Trip Curve D

d

Rated Current (I_n)	
Code	**Current [A]**
005	0.5
010	1
016	1.6
020	2
030	3
040	4
050	5
060	6
070	7
080	8
100	10
130	13
150	15
160	16
200	20
250	25
300	30
320	32
350	35
400	40
500	50
600	60
630	63

Product Selection

1-Pole Circuit Breakers

Photo/Wiring Diagram	UL/CSA Max. Voltage	IEC/EN Max. Voltage	Continuous Current Rating (I_n) [A]	Trip Curve C Inductive 5...10 I_n Cat. No.	Trip Curve D Highly Inductive 10...20 I_n Cat. No.
1-pole	277V AC, 48V DC	230V AC	0.5	1489-M1C005	1489-M1D005
			1	1489-M1C010	1489-M1D010
			1.6	1489-M1C016	1489-M1D016
			2	1489-M1C020	1489-M1D020
			3	1489-M1C030	1489-M1D030
			4	1489-M1C040	1489-M1D040
			5	1489-M1C050	1489-M1D050
			6	1489-M1C060	1489-M1D060
			7	1489-M1C070	1489-M1D070
			8	1489-M1C080	1489-M1D080
			10	1489-M1C100	1489-M1D100
			13	1489-M1C130	1489-M1D130
			15	1489-M1C150	1489-M1D150
			16	1489-M1C160	1489-M1D160
			20	1489-M1C200	1489-M1D200
			25	1489-M1C250	1489-M1D250
			30	1489-M1C300	1489-M1D300
			32	1489-M1C320	1489-M1D320
			35	1489-M1C350	1489-M1D350
	C Curve: 277V AC, 48V DC D Curve: 240V AC, 48V DC		40	1489-M1C400	1489-M1D400
	240V AC, 48V DC		50	1489-M1C500	1489-M1D500
			60	1489-M1C600	1489-M1D600
			63	1489-M1C630	1489-M1D630

Product Selection

2-Pole Circuit Breakers

Photo/Wiring Diagram	UL/CSA Max. Voltage	IEC/EN Max. Voltage	Continuous Current Rating (I_n) [A]	Trip Curve C Inductive 5...10 I_n Cat. No.	Trip Curve D Highly Inductive 10...20 I_n Cat. No.
2-pole	480Y/277V AC, 96V DC	400V AC	0.5	1489-M2C005	1489-M2D005
			1	1489-M2C010	1489-M2D010
			1.6	1489-M2C016	1489-M2D016
			2	1489-M2C020	1489-M2D020
			3	1489-M2C030	1489-M2D030
			4	1489-M2C040	1489-M2D040
			5	1489-M2C050	1489-M2D050
			6	1489-M2C060	1489-M2D060
			7	1489-M2C070	1489-M2D070
			8	1489-M2C080	1489-M2D080
			10	1489-M2C100	1489-M2D100
			13	1489-M2C130	1489-M2D130
			15	1489-M2C150	1489-M2D150
			16	1489-M2C160	1489-M2D160
			20	1489-M2C200	1489-M2D200
			25	1489-M2C250	1489-M2D250
			30	1489-M2C300	1489-M2D300
			32	1489-M2C320	1489-M2D320
			35	1489-M2C350	1489-M2D350
	C Curve: 480Y/277V AC, 96V DC D Curve: 240V AC, 96V DC		40	1489-M2C400	1489-M2D400
	240V AC, 96V DC		50	1489-M2C500	1489-M2D500
			60	1489-M2C600	1489-M2D600
			63	1489-M2C630	1489-M2D630

Product Selection

3-Pole Circuit Breakers

Photo/Wiring Diagram	UL/CSA Max. Voltage	IEC/EN Max. Voltage	Continuous Current Rating (I_n) [A]	Trip Curve C Inductive 5...10 I_n Cat. No.	Trip Curve D Highly Inductive 10...20 I_n Cat. No.
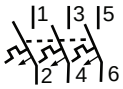 3-pole	480Y/277V AC	400V AC	0.5	1489-M3C005	1489-M3D005
			1	1489-M3C010	1489-M3D010
			1.6	1489-M3C016	1489-M3D016
			2	1489-M3C020	1489-M3D020
			3	1489-M3C030	1489-M3D030
			4	1489-M3C040	1489-M3D040
			5	1489-M3C050	1489-M3D050
			6	1489-M3C060	1489-M3D060
			7	1489-M3C070	1489-M3D070
			8	1489-M3C080	1489-M3D080
			10	1489-M3C100	1489-M3D100
			13	1489-M3C130	1489-M3D130
			15	1489-M3C150	1489-M3D150
			16	1489-M3C160	1489-M3D160
			20	1489-M3C200	1489-M3D200
			25	1489-M3C250	1489-M3D250
			30	1489-M3C300	1489-M3D300
			32	1489-M3C320	1489-M3D320
			35	1489-M3C350	1489-M3D350
	C Curve: 480Y/277V AC D Curve: 240V AC		40	1489-M3C400	1489-M3D400
	240V AC		50	1489-M3C500	1489-M3D500
			60	1489-M3C600	1489-M3D600
			63	1489-M3C630	1489-M3D630

Specifications

Electrical Ratings	
Poles	1, 2, 3
Tripping characteristics	C, D
Rated current (I_n)	0.5...63 A
Rated frequency [f]	50/60 Hz
Rated insulation voltage U_i per IEC/EN 60664-1	250V AC (phase to ground) 440V AC (phase to phase)
Overvoltage category	III
Pollution degree	3

Data per UL/CSA					
Rated voltage	AC	1-pole	C Curve	0.5...40 A	277V AC
				50...63 A	240V AC
			D Curve	0.5...35 A	277V AC
				40...63 A	240V AC
		2-, 3-pole	C Curve	0.5...40 A	480Y/277V AC
				50...63 A	240V AC
			D Curve	0.5...35 A	480Y/277V AC
				40...63 A	240V AC
	DC	1-pole			48V DC
		2-pole			96V DC (2-pole in series)
Rated interrupting capacity per UL 489					10 kA
Reference temperature for tripping characteristics					40 °C
Electrical endurance					6,000 operations (AC and DC); 1 cycle (1s - ON, 9s - OFF)

Data per IEC/EN 60947-2			
Rated operational voltage (U_e)	1-pole		230V AC
	2-, 3-pole		400 V AC
Highest supply or utilization voltage (U_{max})	AC	1-pole	253/440V AC
		2-, 3-pole	440V AC
	DC ★	1-pole	48V DC
		2-pole	96V DC
Min. operating voltage			12V AC, 12V DC
Rated ultimate short-circuit breaking capacity (I_{cu})			15 kA
Rated service short-circuit breaking capacity (I_{cs})			≤40 A: 11.25 kA >40 A: 7.5 kA
Rated impulse withstand voltage Uimp. (1.2/50µs)			4 kV (test voltage 6.2kV at sea level, 5kV at 2,000m)
Dielectric test voltage			2 kV (50/60Hz, 1 min.)
Reference temperature for tripping characteristics			30 °C
Electrical endurance 1 cycle (2s - ON, 13s - OFF, $I_n \leq 32A$), 1 cycle (2s - ON, 28s - OFF, $I_n > 32A$)			$I_n < 30A$:20,000 ops.(AC) $I_n \geq 30A$:10,000 ops. (AC) 1,000 ops. (DC)

★ Self-declared IEC DC ratings.

Mechanical Data	
Housing	Insulation group II, RAL 7035
Indicator window	red ON/green OFF
Protection degree per EN 60529	IP20, IP40 in enclosure with cover
Mechanical endurance	20,000 operations
Shock resistance per IEC/EN 60068-2-27	25 g - 2 shocks - 13 ms
Vibration resistance per IEC/EN 60068-2-6	5g - 20 cycles at 5…150…5 Hz with load 0.8 In
Environmental	
Environmental conditions (damp heat) per IEC/EN 60068-2-30	28 cycles with 55°C/90-96% and 25°C/95-100%
Ambient temperature∆	-25…+55 °C
Storage temperature	-40…+70 °C
Installation	
Terminal	Dual terminal
Cross-section of wire ◆ – solid, stranded (front/back terminal slot)	35/35 mm²
	18…4/18…10 AWG
Cross-section of wire – flexible (front/back terminal slot)	25/10 mm²
Multi-wire rating per UL, CSA	1 wire, 18…4 AWG
	2-4 wires‡, 18…10 AWG
Cross-section of bus bars (back terminal slot)	10 mm²
Tightening torque — IEC	2.8 N•m
Tightening torque — UL/CSA	AWG 18...16: 13.3 in•lb, AWG 14...10: 17.7 in•lb, AWG 8...4: 39.8 in•lb
Screwdriver	No. 2 Pozidrive
Mounting	DIN Rail (EN 60715, 35 mm) with fast clip
Mounting position	Any
Supply	Optional
Approximate Dimensions and Weight	
Pole dimensions (H x D x W)	111 x 69 x 17.5 mm (4.37 x 2.72 x .69")
Pole weight	125 g (4.4 oz.)
Combination with Auxiliary Elements	
Auxiliary contact	Yes
Signal contact	Yes
Shunt trip	Yes

◆ 35 mm self-declared, not included in IEC/EN approval.

∆ Refer to the ambient temperature derating tables.

‡ Wires must be of like size and stranding. Up to two wires per terminal slot.

Power Loss Due to Current

Rated Current [A]	Power Loss Per Pole [W]		Rated Current [A]	Power Loss Per Pole [W]
0.5	1.4		15	2.4
1	1.4		16	2.5
1.6	1.8		20	2.5
2	1.8		25	3.2
3	1.6		30	3.5
4	1.8		32	3.7
5	1.9		35	4.1
6	2.0		40	4.5
7	1.1		50	4.5
8	1.5		60	4.9
10	2.1		63	5.4
13	2.3		—	—

Zero-stack Derating

The installation of several miniature circuit breaker side by side with rated current on all poles requires a correction factor to the rated current (not required if spacers are used).

No. of Adjacent Devices	Factor
1	1
2,3	0.9
4,5	0.8
≥ 6	0.75

Approximate Dimensions

Note: Dimensions are shown in millimeters (inches). Dimensions are not intended for manufacturing purposes.

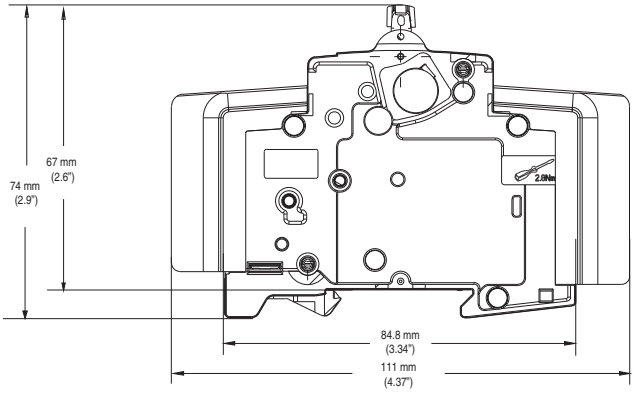

1-Pole

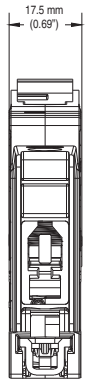

1-Pole

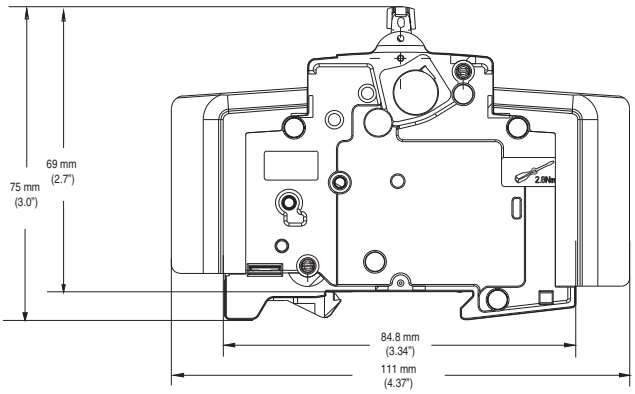

2-, 3-Pole

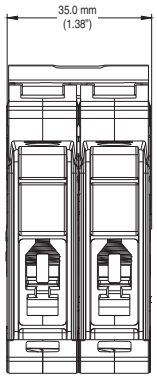

2-Pole

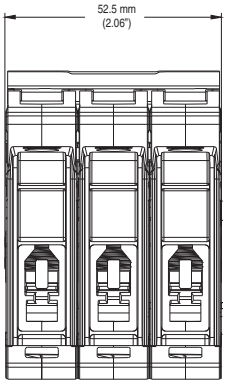

3-Pole

Application Information

Circuit Voltage

The Bulletin 1489-M circuit breakers are rated by voltage class. Applications should not exceed the listed voltage and current range.

Circuit Frequency

The Bulletin 1489-M circuit breakers may be applied to frequencies of 50 Hz and 60 Hz without derating. For applications above 60 Hz, contact Rockwell Automation with specific application information for the derating of the circuit breakers.

Available Short Circuit Current

The Bulletin 1489-M circuit breakers should only be applied in those applications in which the available short-circuit (or fault) current is less than or equal to 10 kA (US/Canada) and 15 kA (IEC).

Tripping Characteristics

The trip curve characteristics are shown on the following pages. The trip bands shown for each breaker represent current tripping limits for a circuit breaker and are within the limits established by UL.

The standard tripping characteristic for Bulletin 1489-M is Type C. Type C has a magnetic trip activated at 5-10 times the rated current of the circuit breaker. The reference temperature for the thermal tripping characteristics is 30 °C. The Type C characteristic will suit most applications.

In rare occurrences when the Type C characteristic does not fully meet the application, Type D magnetic trip characteristic is available, allowing for transients approximately twice as high as the standard Type C.

For a specific current at 30 °C, a circuit breaker will open ("clear the circuit") automatically at some total time that will be within the minimum and maximum time shown on the curves. For example, a one-pole, 15 A, Bulletin 1489-M circuit breaker trips in not less than 1 s and not more than 200 s on a 30 A current. Because the UL standard defines this time spread, users should not specify exact tripping time. The lower current portion of the curves (upper left) depicts the time to trip due to thermal action and reflect overload protection of the wire and connect load. The higher current portion of the curves (lower right) depicts the trip due to magnetic action of the circuit breaker and reflects protection due to short circuit level currents.

Application Considerations

The following is a discussion of application considerations related to North American applications. When applying product to IEC regional requirements, follow IEC practices and guidelines.

The selection of a specific ampere rating for a specific application is dependent on the type of load and duty cycle and is governed by the National Electrical Code (Canadian Electrical Code) and UL/CSA. In general, the codes require that overcurrent protection is at the current supply and at points where wire sizes are reduced. In addition, the codes state that conductors be protected according to their current carrying capacity. There are specific situations that require application consideration, such as motor circuit, and guidelines for the selection for transformer protection.

The Bulletin 1489-M circuit breakers are "non-100% rated" as defined by UL 489, para 7.1.4.2. As such, the circuit breaker's rating should be loaded to no more than 80% if used with continuous loads.

Line and load may be reversed. The Bulletin 1489-M circuit breaker may be bottom fed.

Branch Circuits

Bulletin 1489-M circuit breakers may be used to protect branch circuits. A branch circuit is the wiring portion of a system extending beyond the final overcurrent device protecting the circuit. Guidelines established in NEC, CEC, UL, and CSA should be used to determine the specific device. For example:

Motor Branch Circuit
Bulletin 1489-M circuit breakers are not horsepower rated because they are able to safely interrupt currents far in excess of the locked rotor value for a selected motor. This ability is recognized in the codes and standards and is also established by the UL and CSA tests described in UL 489 and CSA C22.2 No. 5 standards.

The size of a Bulletin 1489-M circuit breaker should be determined following the guidelines for an Inverse Time Circuit Breaker.

References: NEC 430.51 and UL 489. Also see CEC and appropriate Canadian Standards.

Transformer Protection
Bulletin 1489-M circuit breakers may be used for transformer protection following the guidelines established.

References: NEC 450 and UL 489. Also see CEC and appropriate Canadian Standards.

Heater Load, Lighting, and Other Load Protection
Bulletin 1489-M circuit breakers may be used for protection of heater loads, lighting loads, and other loads following the guidelines established.

References: NEC Article 31 and UL 508A. Also see CEC and appropriate Canadian Standards.

SWD Rating

The Bulletin 1489-M breakers (0.5 … 20 A) are rated as Switch Duty (SWD) and as such may be applied to switch fluorescent lighting loads up to their current and voltage maximum.

Coordinated Overcurrent Protection

Where an orderly shutdown is required to minimize the hazards to personnel and equipment, a system of coordination based upon the faulted or overloaded circuit is isolated by selective operation of only the overcurrent protective device closest to the overcurrent condition. The user should select devices that meet this requirement.
References: NEC 240.12. Also see CEC.

HACR Rating

Bulletin 1489-M Circuit Breakers are rated as Heating, Air Conditioning and Refrigeration circuit breakers as defined by UL 489, paragraph 6.7 and may used in this type of application.

Current Limiting

Bulletin 1489-M Circuit Breakers are rated as current limiting circuit breakers as defined by UL 489, paragraph 8.6.

The Bulletin 1489-M line features the ability to achieve short circuit interruptions far more effectively than conventional breakers. In conventional circuit breakers, the short circuit interruption time required is approximately one or two half cycles of an AC sine wave. When the contacts open, the resulting arc continues to burn until the current level passes through zero. The arc may re-ignite because of the insufficient width of the contact gap. The current that flows until the arc is extinguished produces a heating effect proportional to the I^2t value (let-through-energy) of the fault current.

The Bulletin 1489-M device is designed to substantially reduce the amount of let-through-current and the resulting let-through-energy that can damage protected components. The Bulletin 1489-M has the ability to interrupt short circuit current within the first half cycle of the fault. Limiting let-through current and energy will protect against the harmful effects of overcurrent and is focused primarily on avoiding excessive heat and mechanical damage.

Both of these factors are proportional to the square of the current. Thermal energy is proportional to the square of the RMS value and magnetic forces are proportional to the square of the peak value. The most effective way to provide protection is to substantially limit let-through-energy. This provides the following advantages:

- Far less damage at the location of the short circuit.
- Fast electric separation of a faulty unit from the system, especially power supplies connected in parallel that are switched off when the voltage of the power bus drops below a certain level.
- Far less wear on the miniature circuit breaker itself. This means more safe interruptions.
- Better protection of all components in the short circuit path.
- Far wider range of selective action when used with an upstream protective device. (No nuisance shut downs from feeder line interruptions, causing a blackout in all connected branches.)

Ambient Temperature Derating

The Bulletin 1489-M circuit breakers are rated in RMS amperes at a 40 °C (104 °F) ambient temperature per UL 489/CSA C22.2 No. 5. This temperature is used as the ambient temperature external to an industrial enclosure. If a circuit breaker is applied in a temperature that exceeds the 40 °C (104 °F) ambient rating, then the circuit breaker should be derated using the table below. For IEC 60947-2 standard, the products carry an ambient rating of 30 °C. Follow standard IEC application considerations for temperature rating in different ambient temperatures.

Note: Application below 0º C is for non-condensing atmosphere. Care should be taken for applications below 0 °C. These devices are not certified to operate correctly in the presence of ice.

Bulletin 1489-M
Temperature Derating, UL
Reference temperature = 40 °C

Current Rating	Ambient temperature (°C)									
(A)	-25	-20	-10	0	10	20	30	40	50	55
0.5	0.6	0.6	0.6	0.6	0.6	0.5	0.5	0.5	0.5	0.5
1	1.2	1.2	1.2	1.1	1.1	1.1	1.0	1	1.0	0.9
1.6	2.0	2.0	1.9	1.8	1.8	1.7	1.7	1.6	1.5	1.5
2	2.5	2.4	2.4	2.3	2.2	2.1	2.1	2	1.9	1.9
3	3.7	3.7	3.6	3.4	3.3	3.2	3.1	3	2.9	2.8
4	5.0	4.9	4.7	4.6	4.4	4.3	4.1	4	3.9	3.8
5	6.2	6.1	5.9	5.7	5.6	5.4	5.2	5	4.8	4.7
6	7.4	7.3	7.1	6.9	6.7	6.4	6.2	6	5.8	5.7
7	8.7	8.6	8.3	8.0	7.8	7.5	7.3	7	6.7	6.6
8	9.9	9.8	9.5	9.2	8.9	8.6	8.3	8	7.7	7.6
10	12.4	12.2	11.9	11.5	11.1	10.7	10.4	10	9.6	9.4
13	16.1	15.9	15.4	14.9	14.4	14.0	13.5	13	12.5	12.3
15	18.6	18.3	17.8	17.2	16.7	16.1	15.6	15	14.4	14.2
16	19.8	19.6	19.0	18.4	17.8	17.2	16.6	16	15.4	15.1
20	24.8	24.4	23.7	23.0	22.2	21.5	20.7	20	19.3	18.9
25	31.0	30.6	29.6	28.7	27.8	26.9	25.9	25	24.1	23.6
30	37.2	36.7	35.6	34.4	33.3	32.2	31.1	30	28.9	28.3
32	39.7	39.1	37.9	36.7	35.6	34.4	33.2	32	30.8	30.2
35	43.4	42.8	41.5	40.2	38.9	37.6	36.3	35	33.7	33.1
40	49.6	48.9	47.4	45.9	44.4	43.0	41.5	40	38.5	37.8
50	62.0	61.1	59.3	57.4	55.6	53.7	51.9	50	48.2	47.2
60	74.4	73.3	71.1	68.9	66.7	64.4	62.2	60	57.8	56.7
63	78.2	77.0	74.7	72.3	70.0	67.7	65.3	63	60.7	59.5

Bulletin 1489-M
Temperature Derating, IEC
Reference temperature = 30 °C

Current Rating	Ambient temperature (°C)									
(A)	-25	-20	-10	0	10	20	30	40	50	55
0.5	0.6	0.6	0.6	0.6	0.5	0.5	0.5	0.5	0.5	0.5
1	1.2	1.2	1.1	1.1	1.1	1.0	1	1.0	0.9	0.9
1.6	1.9	1.9	1.8	1.8	1.7	1.7	1.6	1.5	1.5	1.5
2	2.4	2.4	2.3	2.2	2.1	2.1	2	1.9	1.9	1.8
3	3.6	3.6	3.4	3.3	3.2	3.1	3	2.9	2.8	2.7
4	4.8	4.7	4.6	4.4	4.3	4.1	4	3.9	3.7	3.6
5	6.0	5.9	5.7	5.6	5.4	5.2	5	4.8	4.6	4.5
6	7.2	7.1	6.9	6.7	6.4	6.2	6	5.8	5.6	5.4
7	8.4	8.3	8.0	7.8	7.5	7.3	7	6.7	6.5	6.4
8	9.6	9.5	9.2	8.9	8.6	8.3	8	7.7	7.4	7.3
10	12.0	11.9	11.5	11.1	10.7	10.4	10	9.6	9.3	9.1
13	15.6	15.4	14.9	14.4	14.0	13.5	13	12.5	12.0	11.8
15	18.1	17.8	17.2	16.7	16.1	15.6	15	14.4	13.9	13.6
16	19.3	19.0	18.4	17.8	17.2	16.6	16	15.4	14.8	14.5
20	24.1	23.7	23.0	22.2	21.5	20.7	20	19.3	18.5	18.2
25	30.1	29.6	28.7	27.8	26.9	25.9	25	24.1	23.2	22.7
30	36.1	35.6	34.4	33.3	32.2	31.1	30	28.9	27.8	27.2
32	38.5	37.9	36.7	35.6	34.4	33.2	32	30.8	29.6	29.0
35	42.1	41.5	40.2	38.9	37.6	36.3	35	33.7	32.4	31.8
40	48.1	47.4	45.9	44.4	43.0	41.5	40	38.5	37.0	36.3
50	60.2	59.3	57.4	55.6	53.7	51.9	50	48.2	46.3	45.4
60	72.2	71.1	68.9	66.7	64.4	62.2	60	57.8	55.6	54.5
63	75.8	74.7	72.3	70.0	67.7	65.3	63	60.7	58.3	57.2

Tripping Characteristics*

C Curve

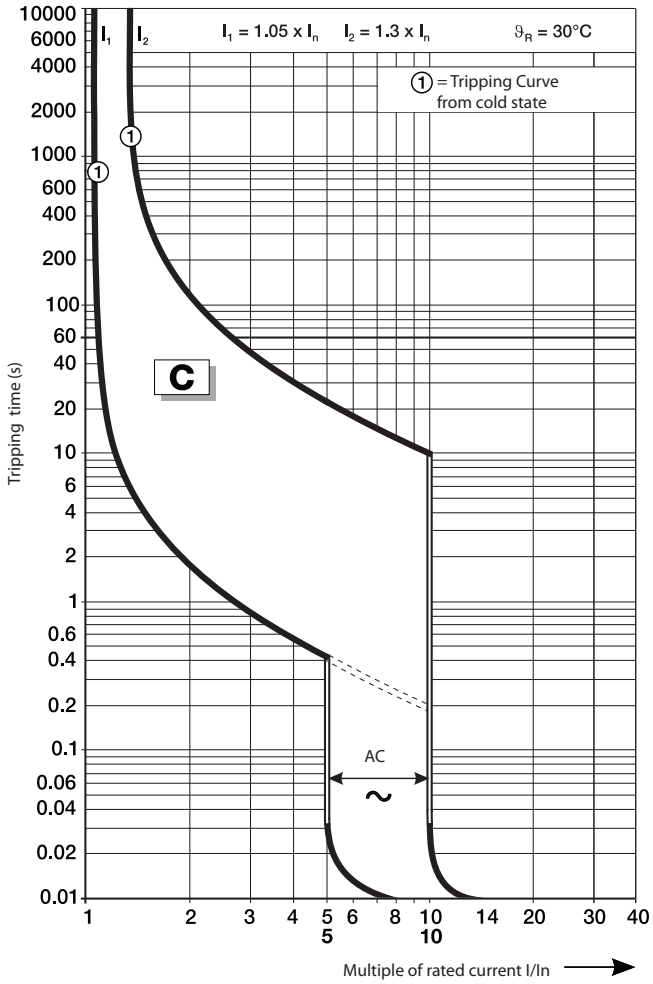

D Curve

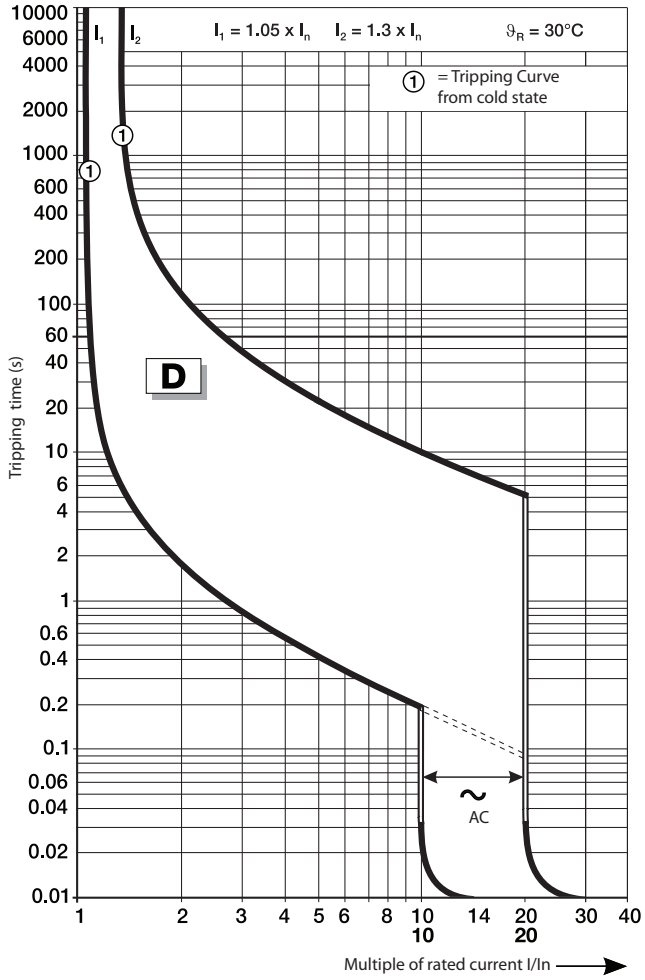

*DC trip curves:
When using 1489-M.. on DC applications or DC loads, please refer to AC trip curves and times and use a factor of 1.5 for the magnetic instantaneous trip times the continuous current rating (In).
For C trip curve = 7.5 to 15 multiple of the rated current (I/ In).
For D trip curve = 15 to 30 multiple of the rated current (I/ In).
The thermal trip times remain the same for both AC and DC applications.

Accessories

Right Mount

Photo	Product Description ★‡§	Contacts	Standards	Certifications	UL/CSA Max. Current/Voltage	IEC Ratings Current/Voltage	Cat. No.
	Shunt Trip		UL 489 CSA 22.2 No. 5 EN 60947-5-2	UL Listed CSA Certified CE Marked	110...415V AC 110...250V DC	—	1489-AMST1
			UL 489 CSA 22.2 No. 5 EN 60947-5-2	UL Listed CSA Certified CE Marked	12...60V AC/DC	—	1489-AMST2
	Signal Contact	1 N.O./N.C. (1 C.O.)	UL 489 CSA 22.2 No. 5 EN 60947-5-1 GB 14048.5	UL Listed CSA Certified CE Marked VDE Certified CCC Certified	1A @ 480V AC 2A @ 277V AC 1.5A @ 125V DC 2A @ 60V DC 4A @ 24V DC	2A @ 230V (AC-14) 1A @ 400V (AC-14) 1.5A @ 110V (DC-12) 1A @ 220V (DC-12) 4A @ 24V (DC-13) 2A @ 60V (DC-13)	1489-AMRS3
	Auxiliary Contact	1 N.O./N.C. (1 C.O.)	UL 489 CSA 22.2 No. 5 EN 60947-5-1 GB 14048.5	UL Listed CSA Certified CE Marked VDE Certified CCC Certified	1A @ 480V AC 2A @ 277V AC 1.5A @ 125V DC 2A @ 60V DC 4A @ 24V DC	2A @ 230V (AC-14) 1A @ 400V (AC-14) 1.5A @ 110V (DC-12) 1A @ 220V (DC-12) 4A @ 24V (DC-13) 2A @ 60V (DC-13)	1489-AMRA3

★ A maximum of two auxiliary contacts ***OR*** one signal contact and one auxiliary contact may installed with or without one shunt trip per 1489-M. If a shunt trip is not used, two signal contacts may be installed per 1489-M.

‡ A maximum of three accessories may be installed per 1489-M. The shunt trip must be mounted closest to the 1489-M, then the signal contact, then the auxiliary contact(s). For allowed combinations, and installation instructions please contact your local Rockwell Automation sales office or Allen-Bradley distributor.

§ The shunt trips are allowed two wires per terminal (one wire per terminal slot). The signal and auxiliary contacts are allowed up to two wires per terminal.

Toggle Mount

Photo	Product Description	Cat. No.
	Lock-out attachment for 1-pole MCB	189-ALOA1
	Lock-out attachment for multi-pole MCB	189-ALOA2

Accessory Approximate Dimensions

Note: Dimensions are shown in millimeters (inches). Dimensions are not intended for manufacturing purposes.

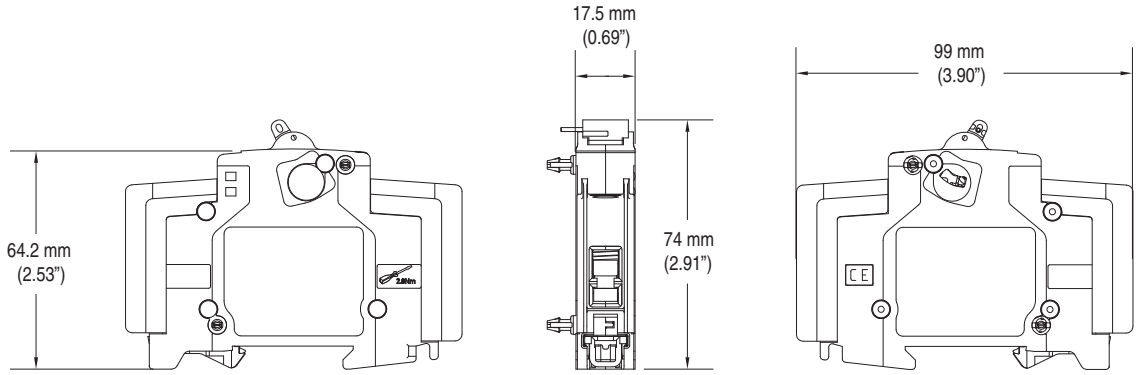

1489-AMST1 and 1489-AMST2

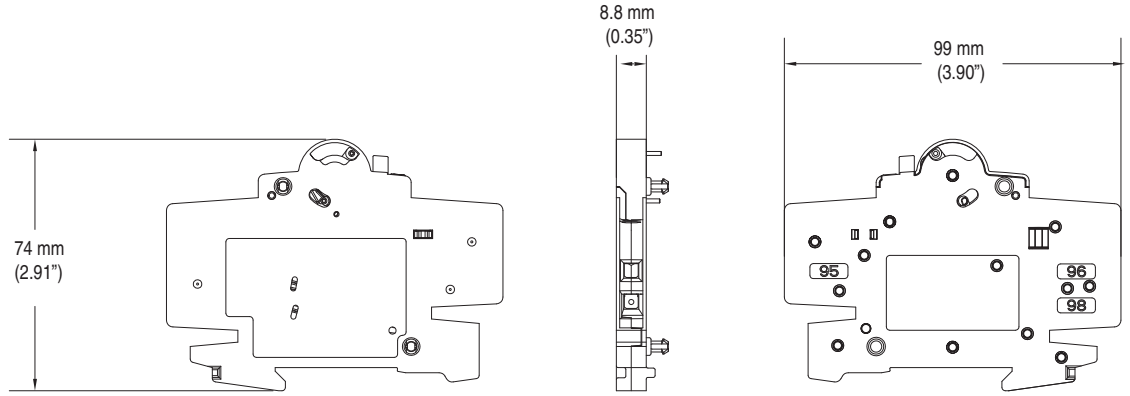

1489-AMRS3

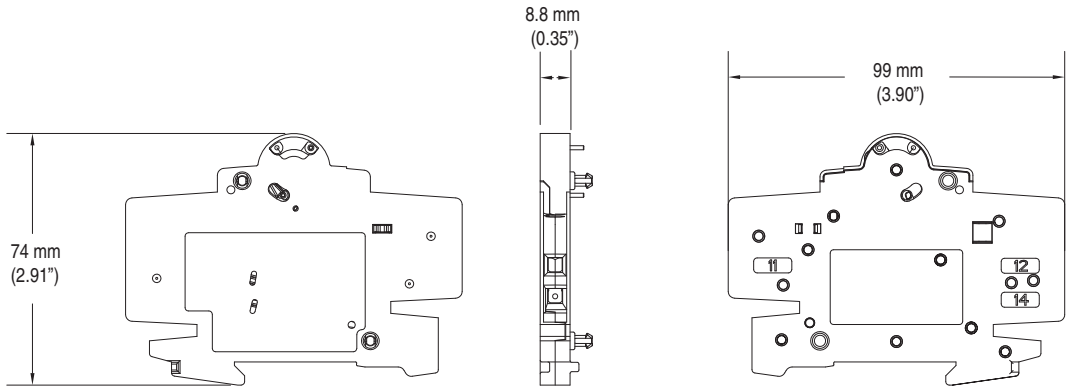

1489-AMRA3

Bus Bars

1489-M Bus Bars

Phase	No. of Pins	No. of Circuit Breakers	Pkg Qty.	Cat. No. ★‡
1-Phase	6	6	10	1489-AMCL106
	12	12	10	1489-AMCL112
	18	18	10	1489-AMCL118
2-Phase	6	3	10	1489-AMCL206
	12	6	10	1489-AMCL212
	18	9	10	1489-AMCL218
3-Phase	6	2	10	1489-AMCL306
	12	4	10	1489-AMCL312
	18	6	10	1489-AMCL318

★ cULus, UL 508, EN 60947-1, CE Marked
‡ Maximum of three bus bars allowed

1489-M Bus Bar Accessories

Description	Pkg. Qty.	Cat. No. ★
Terminal Power Feed, 35 mm^2	10	1489-AMCLT35
Dedicated Power Feed, 50 mm^2	10	1489-AMCLT50D
Protective Shroud (for unused pins)	10	1489-AMCLPS

★ cULus, UL 508, EN 60947-1, CE Marked

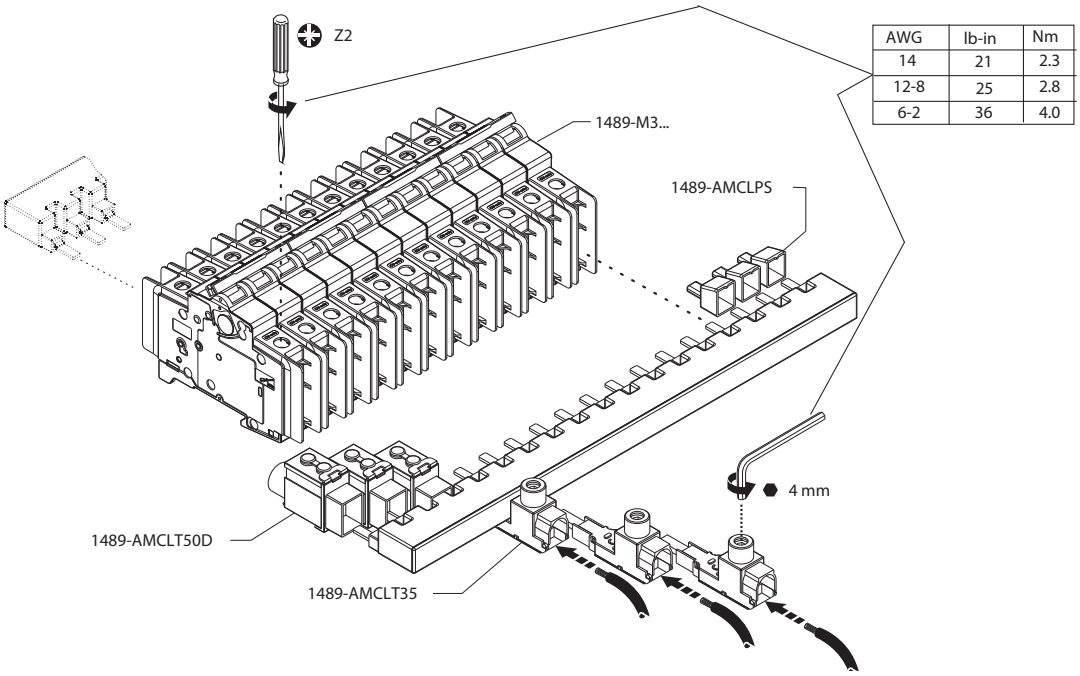

AWG	lb-in	Nm
14	21	2.3
12-8	25	2.8
6-2	36	4.0

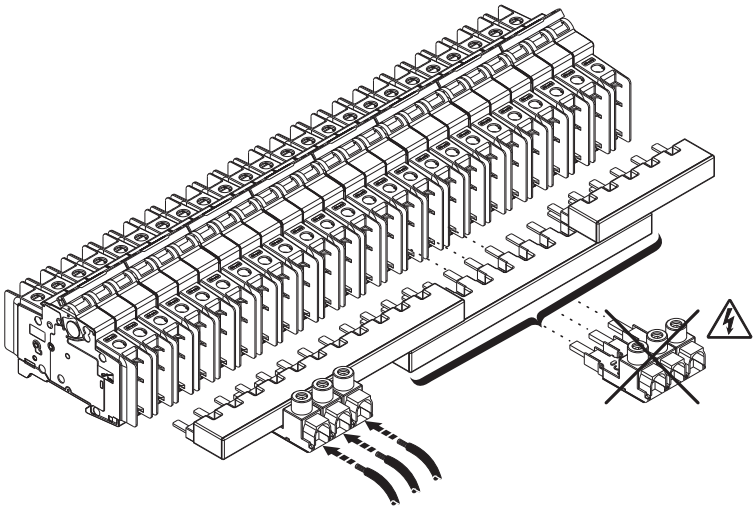

Note: Do not cut bus bars. Maximum of 3 bus bars allowed in any combination of the same phase configuration. Multiple bus bars must be installed back-to-back.

Bus Bar Approximate Dimensions

Note: Dimensions are shown in millimeters (inches). Dimensions are not intended for manufacturing purposes.

1-Phase Bus Bars

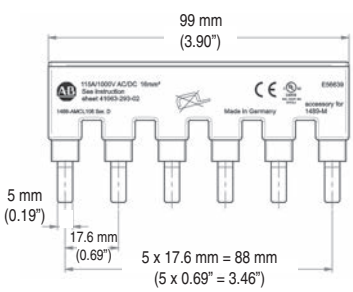

1489-AMCL106

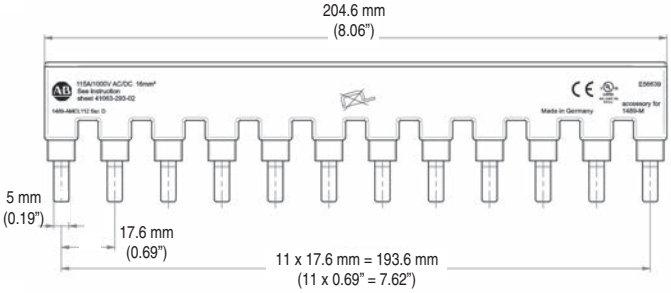

1489-AMCL112

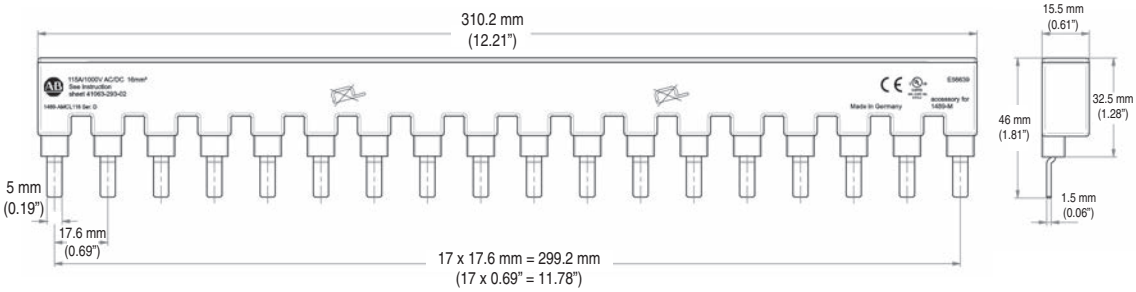

1489 -AMCL118

Bus Bar Approximate Dimensions

Note: Dimensions are shown in millimeters (inches). Dimensions are not intended for manufacturing purposes.

2-Phase Bus Bars

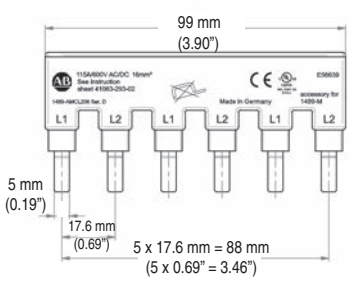

1489-AMCL206

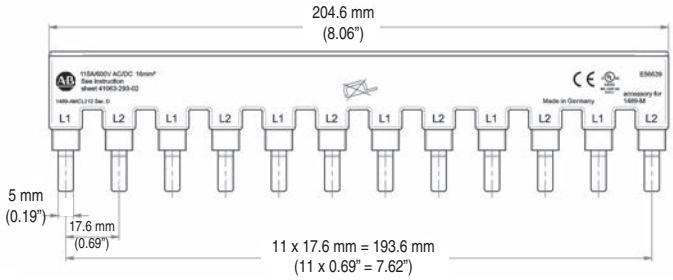

1489 -AMCL212

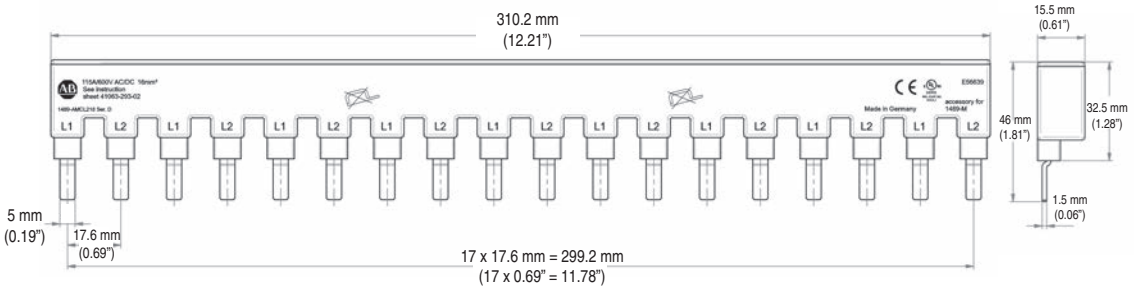

1489-AMCL218

Bus Bar Approximate Dimensions

Note: Dimensions are shown in millimeters (inches). Dimensions are not intended for manufacturing purposes.

3-Phase Bus Bars

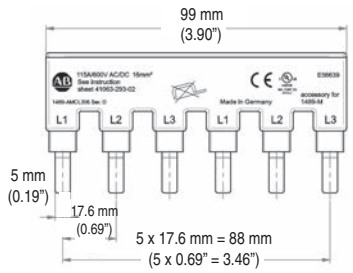

1489-AMCL306

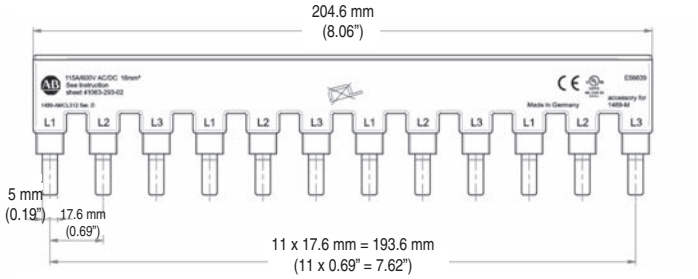

1489 -AMCL312

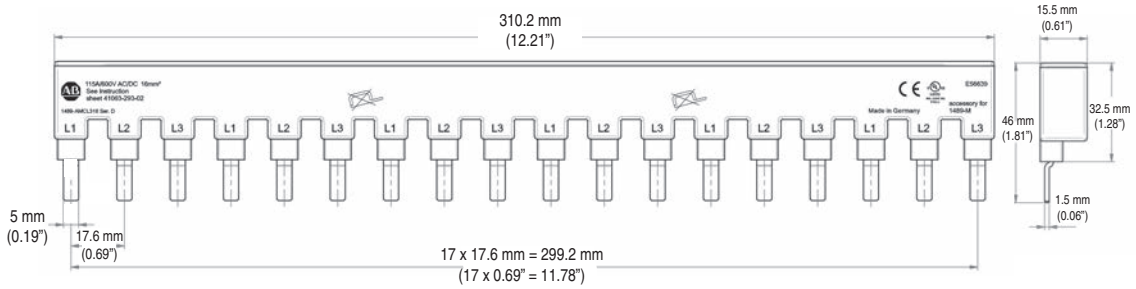

1489-AMCL318

Bus Bar Accessory Approximate Dimensions

Note: Dimensions are shown in millimeters (inches). Dimensions are not intended for manufacturing purposes.

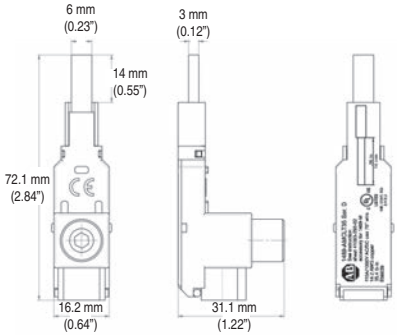

1489-AMCLT35

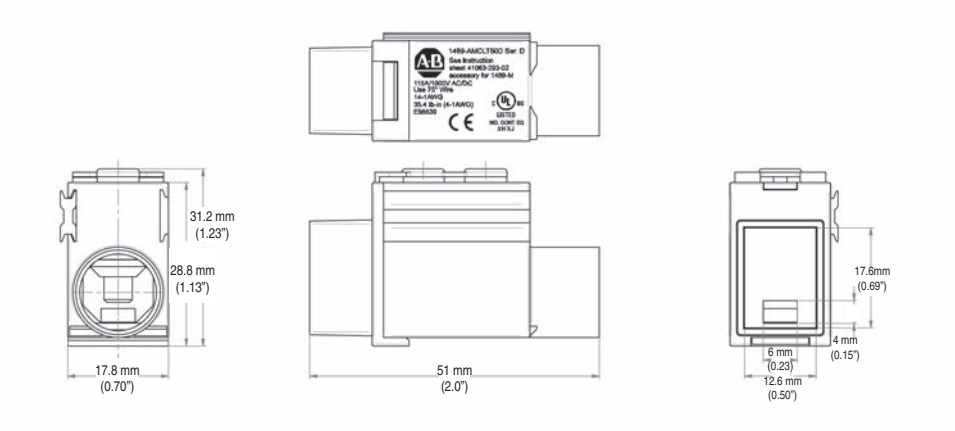

1489-AMCLT50D

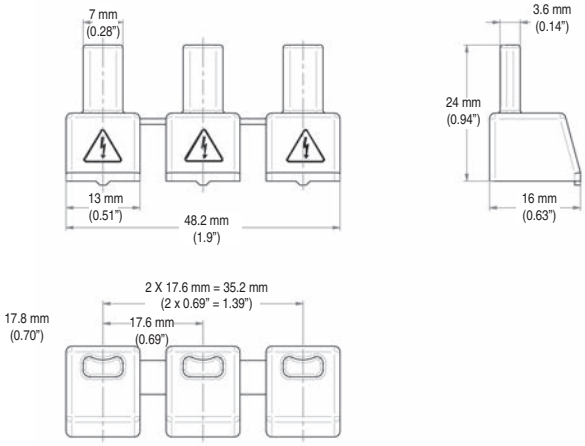

1489-AMCLPS

1492-SP Supplementary Protectors

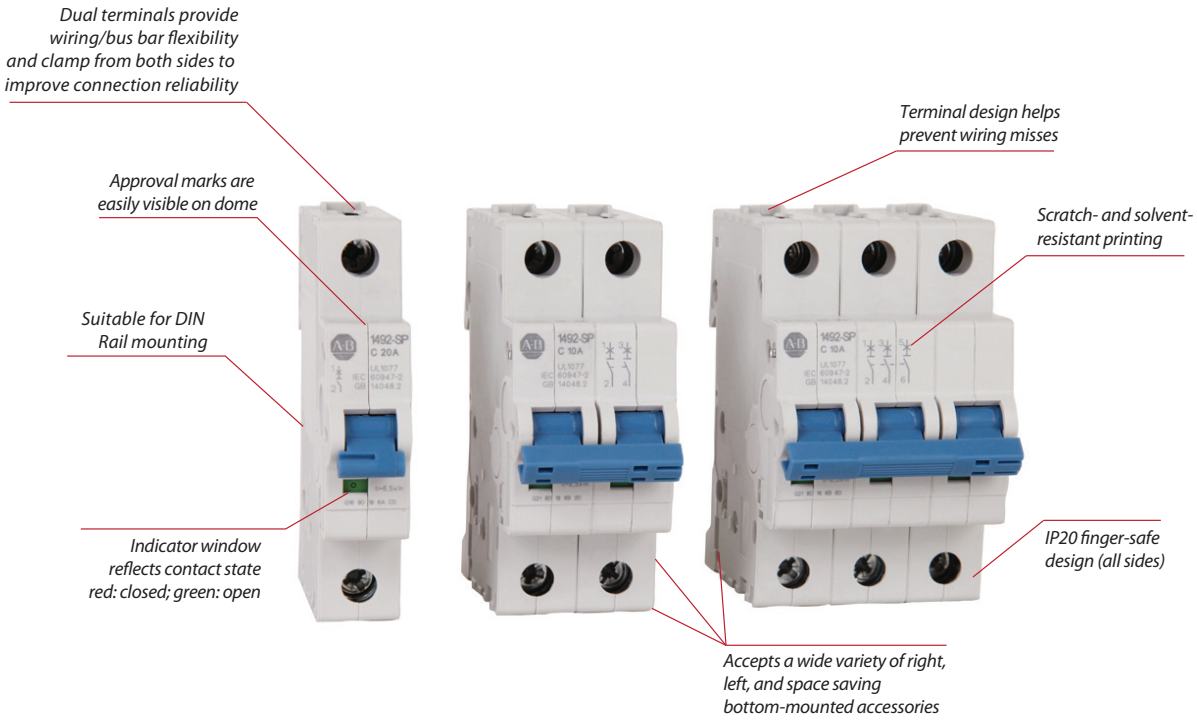

Bulletin 1492-SP thermal magnetic Supplementary Protectors provide overcurrent protection for equipment where branch circuit protection is already provided, or is not required. These devices are also Miniature Circuit Breakers as defined by IEC Standards.

These supplementary protectors are offered as a broad portfolio of pole variants, current ratings, and trip curves to match the appropriate level of protection for your application. They may be used with UL 508 Listed bus bars for convenience in panel assembly, a wide range of left-, right- and space saving bottom-mount accessories, and lock out attachments for safety during maintenance.

1492-SP Supplementary Protectors

Rated Voltage	UL/CSA: Max. 480Y/277V AC IEC: U_e 230/400V AC
Interrupting Capacity	UL/CSA: 5...10 kA IEC: 15 kA
Current Ratings	0.5...63 A
Poles	1, 2, 3, 1+N, 3+N
Trip Curves	B, C, D
Standards Compliance	UL 1077 CSA C22.2 No. 235 EN 60947-2 GB 14048.2
Certifications	UL Recognized, File No. E65138 ★ CSA Certified, File No. 259391 ★ CE Marked CCC Certified VDE Certified RoHS Compliant

★ 1+N and 3+N devices are not UL recognized or CSA certified.

Features

- Current limiting
- Fast breaking time
- Existing installations can be easily upgraded to include an auxiliary using the bottom mounted auxiliary contact options, which require no DIN Rail space
- 40 °C calibration temperature (UL/CSA) eliminates need to derate for 508A industrial control panel installations
- Installation of up to six accessories on the same circuit breaker
- Dual terminals provide a more secure connection of up to four wires, or two wires and a bus bar
- Superior shock and vibration resistance to prevent nuisance tripping
- Terminal design helps prevent wiring misses by directing wires into the terminal openings, even while tightening
- Reversible line and load connections
- Single and multi-pole toggle mount lock out attachments available for Lockout/Tagout (LOTO)
- RoHS compliant and fully-recyclable device
- Suitable for extreme ambient conditions

Catalog Number Explanation

Note: Examples given in this section are for reference purposes. This basic explanation should not be used for product selection; some combinations may not produce a valid catalog number.

1492	-	SPM	1	C	010	-	N
		a	*b*	*c*	*d*		*e*

a

Voltage Type	
Code	**Description**
SPM	AC Supplementary Protector

b

Poles	
Code	**Description**
1	1-Pole
2	2-Pole
3	3-Pole

c

Trip Curve	
Code	**Trip Curve**
B	Trip Curve B
C	Trip Curve C
D	Trip Curve D

d

Rated Current (I_n)	
Code	**Current [A]**
005	0.5
010	1
020	2
030	3
040	4
050	5
060	6
070	7
080	8
100	10
130	13
150	15
160	16
200	20
250	25
300	30
320	32
400	40
500	50
630	63

e

+ Neutral (available for 1+N and 3+N configurations)	
Code	**Description**
	Can be left blank
N	+ Neutral

Product Selection

1-Pole Supplementary Protectors

Photo/Wiring Diagram	Continuous Current Rating (I_n) [A]	Trip Curve B Resistive or Slightly Inductive 3...5 I_n Cat. No.	Trip Curve C Inductive 5...10 I_n Cat. No.	Trip Curve D Highly Inductive 10...20 I_n Cat. No.
1-pole	0.5	1492-SPM1B005	1492-SPM1C005	1492-SPM1D005
	1	1492-SPM1B010	1492-SPM1C010	1492-SPM1D010
	2	1492-SPM1B020	1492-SPM1C020	1492-SPM1D020
	3	1492-SPM1B030	1492-SPM1C030	1492-SPM1D030
	4	1492-SPM1B040	1492-SPM1C040	1492-SPM1D040
	5	1492-SPM1B050	1492-SPM1C050	1492-SPM1D050
	6	1492-SPM1B060	1492-SPM1C060	1492-SPM1D060
	7	1492-SPM1B070	1492-SPM1C070	1492-SPM1D070
	8	1492-SPM1B080	1492-SPM1C080	1492-SPM1D080
	10	1492-SPM1B100	1492-SPM1C100	1492-SPM1D100
	13	1492-SPM1B130	1492-SPM1C130	1492-SPM1D130
	15	1492-SPM1B150	1492-SPM1C150	1492-SPM1D150
	16	1492-SPM1B160	1492-SPM1C160	1492-SPM1D160
	20	1492-SPM1B200	1492-SPM1C200	1492-SPM1D200
	25	1492-SPM1B250	1492-SPM1C250	1492-SPM1D250
	30	1492-SPM1B300	1492-SPM1C300	1492-SPM1D300
	32	1492-SPM1B320	1492-SPM1C320	1492-SPM1D320
	40	1492-SPM1B400	1492-SPM1C400	1492-SPM1D400
	50	1492-SPM1B500	1492-SPM1C500	1492-SPM1D500
	63	1492-SPM1B630	1492-SPM1C630	1492-SPM1D630

Product Selection

1-Pole + Neutral Supplementary Protectors★

Photo/Wiring Diagram	Continuous Current Rating (I_n) [A]	Trip Curve B Resistive or Slightly Inductive 3...5 I_n Cat. No.	Trip Curve C Inductive 5...10 I_n Cat. No.	Trip Curve D Highly Inductive 10...20 I_n Cat. No.
	0.5	1492-SPM1B005-N	1492-SPM1C005-N	1492-SPM1D005-N
	1	1492-SPM1B010-N	1492-SPM1C010-N	1492-SPM1D010-N
	2	1492-SPM1B020-N	1492-SPM1C020-N	1492-SPM1D020-N
	3	1492-SPM1B030-N	1492-SPM1C030-N	1492-SPM1D030-N
	4	1492-SPM1B040-N	1492-SPM1C040-N	1492-SPM1D040-N
	5	1492-SPM1B050-N	1492-SPM1C050-N	1492-SPM1D050-N
	6	1492-SPM1B060-N	1492-SPM1C060-N	1492-SPM1D060-N
	7	1492-SPM1B070-N	1492-SPM1C070-N	1492-SPM1D070-N
	8	1492-SPM1B080-N	1492-SPM1C080-N	1492-SPM1D080-N
	10	1492-SPM1B100-N	1492-SPM1C100-N	1492-SPM1D100-N
	13	1492-SPM1B130-N	1492-SPM1C130-N	1492-SPM1D130-N
	15	1492-SPM1B150-N	1492-SPM1C150-N	1492-SPM1D150-N
	16	1492-SPM1B160-N	1492-SPM1C160-N	1492-SPM1D160-N
	20	1492-SPM1B200-N	1492-SPM1C200-N	1492-SPM1D200-N
	25	1492-SPM1B250-N	1492-SPM1C250-N	1492-SPM1D250-N
	30	1492-SPM1B300-N	1492-SPM1C300-N	1492-SPM1D300-N
1-pole +N	32	1492-SPM1B320-N	1492-SPM1C320-N	1492-SPM1D320-N
	40	1492-SPM1B400-N	1492-SPM1C400-N	1492-SPM1D400-N
	50	1492-SPM1B500-N	1492-SPM1C500-N	1492-SPM1D500-N
	63	1492-SPM1B630-N	1492-SPM1C630-N	1492-SPM1D630-N

★ 1+N configurations are not UL or CSA certified.

Product Selection

2-Pole Supplementary Protectors

Photo/Wiring Diagram	Continuous Current Rating (I_n) [A]	Trip Curve B Resistive or Slightly Inductive 3...5 I_n Cat. No.	Trip Curve C Inductive 5...10 I_n Cat. No.	Trip Curve D Highly Inductive 10...20 I_n Cat. No.
	0.5	1492-SPM2B005	1492-SPM2C005	1492-SPM2D005
	1	1492-SPM2B010	1492-SPM2C010	1492-SPM2D010
	2	1492-SPM2B020	1492-SPM2C020	1492-SPM2D020
	3	1492-SPM2B030	1492-SPM2C030	1492-SPM2D030
	4	1492-SPM2B040	1492-SPM2C040	1492-SPM2D040
	5	1492-SPM2B050	1492-SPM2C050	1492-SPM2D050
	6	1492-SPM2B060	1492-SPM2C060	1492-SPM2D060
	7	1492-SPM2B070	1492-SPM2C070	1492-SPM2D070
	8	1492-SPM2B080	1492-SPM2C080	1492-SPM2D080
	10	1492-SPM2B100	1492-SPM2C100	1492-SPM2D100
	13	1492-SPM2B130	1492-SPM2C130	1492-SPM2D130
	15	1492-SPM2B150	1492-SPM2C150	1492-SPM2D150
	16	1492-SPM2B160	1492-SPM2C160	1492-SPM2D160
	20	1492-SPM2B200	1492-SPM2C200	1492-SPM2D200
	25	1492-SPM2B250	1492-SPM2C250	1492-SPM2D250
	30	1492-SPM2B300	1492-SPM2C300	1492-SPM2D300
2-pole	32	1492-SPM2B320	1492-SPM2C320	1492-SPM2D320
	40	1492-SPM2B400	1492-SPM2C400	1492-SPM2D400
	50	1492-SPM2B500	1492-SPM2C500	1492-SPM2D500
	63	1492-SPM2B630	1492-SPM2C630	1492-SPM2D630

Product Selection

3-Pole Supplementary Protectors

Photo/Wiring Diagram	Continuous Current Rating (I_n) [A]	Trip Curve B Resistive or Slightly Inductive 3...5 I_n Cat. No.	Trip Curve C Inductive 5...10 I_n Cat. No.	Trip Curve D Highly Inductive 10...20 I_n Cat. No.
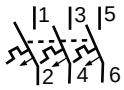 3-pole	0.5	1492-SPM3B005	1492-SPM3C005	1492-SPM3D005
	1	1492-SPM3B010	1492-SPM3C010	1492-SPM3D010
	2	1492-SPM3B020	1492-SPM3C020	1492-SPM3D020
	3	1492-SPM3B030	1492-SPM3C030	1492-SPM3D030
	4	1492-SPM3B040	1492-SPM3C040	1492-SPM3D040
	5	1492-SPM3B050	1492-SPM3C050	1492-SPM3D050
	6	1492-SPM3B060	1492-SPM3C060	1492-SPM3D060
	7	1492-SPM3B070	1492-SPM3C070	1492-SPM3D070
	8	1492-SPM3B080	1492-SPM3C080	1492-SPM3D080
	10	1492-SPM3B100	1492-SPM3C100	1492-SPM3D100
	13	1492-SPM3B130	1492-SPM3C130	1492-SPM3D130
	15	1492-SPM3B150	1492-SPM3C150	1492-SPM3D150
	16	1492-SPM3B160	1492-SPM3C160	1492-SPM3D160
	20	1492-SPM3B200	1492-SPM3C200	1492-SPM3D200
	25	1492-SPM3B250	1492-SPM3C250	1492-SPM3D250
	30	1492-SPM3B300	1492-SPM3C300	1492-SPM3D300
	32	1492-SPM3B320	1492-SPM3C320	1492-SPM3D320
	40	1492-SPM3B400	1492-SPM3C400	1492-SPM3D400
	50	1492-SPM3B500	1492-SPM3C500	1492-SPM3D500
	63	1492-SPM3B630	1492-SPM3C630	1492-SPM3D630

Product Selection

3-Pole + Neutral Supplementary Protectors★

Photo/Wiring Diagram	Continuous Current Rating (I_n) [A]	Trip Curve B Resistive or Slightly Inductive 3...5 I_n Cat. No.	Trip Curve C Inductive 5...10 I_n Cat. No.	Trip Curve D Highly Inductive 10...20 I_n Cat. No.
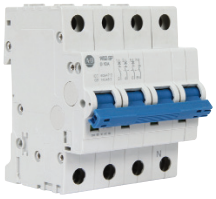 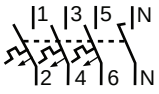 3-pole + N	0.5	1492-SPM3B005-N	1492-SPM3C005-N	1492-SPM3D005-N
	1	1492-SPM3B010-N	1492-SPM3C010-N	1492-SPM3D010-N
	2	1492-SPM3B020-N	1492-SPM3C020-N	1492-SPM3D020-N
	3	1492-SPM3B030-N	1492-SPM3C030-N	1492-SPM3D030-N
	4	1492-SPM3B040-N	1492-SPM3C040-N	1492-SPM3D040-N
	5	1492-SPM3B050-N	1492-SPM3C050-N	1492-SPM3D050-N
	6	1492-SPM3B060-N	1492-SPM3C060-N	1492-SPM3D060-N
	7	1492-SPM3B070-N	1492-SPM3C070-N	1492-SPM3D070-N
	8	1492-SPM3B080-N	1492-SPM3C080-N	1492-SPM3D080-N
	10	1492-SPM3B100-N	1492-SPM3C100-N	1492-SPM3D100-N
	13	1492-SPM3B130-N	1492-SPM3C130-N	1492-SPM3D130-N
	15	1492-SPM3B150-N	1492-SPM3C150-N	1492-SPM3D150-N
	16	1492-SPM3B160-N	1492-SPM3C160-N	1492-SPM3D160-N
	20	1492-SPM3B200-N	1492-SPM3C200-N	1492-SPM3D200-N
	25	1492-SPM3B250-N	1492-SPM3C250-N	1492-SPM3D250-N
	30	1492-SPM3B300-N	1492-SPM3C300-N	1492-SPM3D300-N
	32	1492-SPM3B320-N	1492-SPM3C320-N	1492-SPM3D320-N
	40	1492-SPM3B400-N	1492-SPM3C400-N	1492-SPM3D400-N
	50	1492-SPM3B500-N	1492-SPM3C500-N	1492-SPM3D500-N
	63	1492-SPM3B630-N	1492-SPM3C630-N	1492-SPM3D630-N

★ 3+N configurations are not UL or CSA certified.

Specifications

Electrical Ratings			
Poles			1, 2, 3, 1+N, 3+N
Tripping characteristics			B, C, D
Rated current (I_n)			0.5 . . . 63 A
Rated frequency (f)			50/60 Hz
Rated insulation voltage U_i per IEC/EN 60664-1			250 V AC (phase to ground), 440V AC (phase to phase)
Overvoltage category			III
Pollution degree			3
Data per UL/CSA			
Rated voltage	1-pole	AC	277V AC
		DC	48V DC
	2-pole	AC	480Y/277V AC
		DC	96V DC
	3-pole	AC	480Y/277V AC
Rated interrupting capacity per UL 1077			≤ 32 A: 10 kA (AC); > 32 A: 5 kA (AC); 0.5...63 A: 10 kA (DC)
Application			Supplementary protector for general use; application codes: TC1: [1P] OL0 277V AC, [2P, 3P] OL0 480Y/277V AC; SC: 10 kA (0.5...32 A), 5 kA (35...63 A), U2 480Y/277V AC; FW3
Reference temperature for tripping characteristics			40 °C
Electrical endurance			6,000 ops (AC), 6,000 ops. (DC) 1 cycle (1s - ON, 9s - OFF)
Data per IEC/EN 60947-2			
Rated operational voltage (U_e)		1-pole, 1+N	230V AC
		2-pole, 3-pole, 3+N	400V AC
Highest supply or utilization voltage (U_{max})	AC	1-pole, 1+N	253V AC
		2-pole, 3-pole, 3+N	440V AC
	DC★	1-pole	48V DC
		2-pole	96V DC
Min. operating voltage			12V AC, 12V DC
Rated ultimate short-circuit breaking capacity (I_{CU})			15 kA
Rated service short-circuit breaking capacity (I_{CS})			≤40 A: 11.25 kA >40 A: 7.5 kA
Rated impulse withstand voltage Uimp. (1.2/50µs)			4 kV (test voltage 6.2kV at sea level, 5kV at 2,000m)
Dielectric test voltage			2 kV (50/60Hz, 1 min.)
Reference temperature for tripping characteristics			30 °C
Electrical endurance 1 cycle (2s - ON, 13s - OFF, I_n ≤ 32A), 1 cycle (2s - ON, 28s - OFF, I_n > 32A)			I_n < 30A: 20,000 ops (AC) I_n ≥ 30A: 10,000 ops. (AC) 1,000 ops. (DC)

★ IEC DC ratings self-declared.

♣ 2-pole/3-pole single pole load: TC2.

Mechanical Data		
Housing		Insulation group II, RAL 7035
Indicator window		red ON/green OFF
Protection degree per EN 60529		IP20, IP40 in enclosure with cover
Mechanical endurance		20,000 operations
Shock resistance per IEC/EN 60068-2-27		25 g - 2 shocks - 13 ms
Vibration resistance per IEC/EN 60068-2-6		5g - 20 cycles at 5...150...5 Hz with load 0.8In
Environmental		
Environmental conditions (damp heat) per IEC/EN 60068-2-30		28 cycles with 55°C/90-96% and 25°C/95-100%
Ambient temperature∆		-25...+55 °C
Storage temperature		-40...+70 °C
Installation		
Terminal		Dual terminal
Cross-section of wire ♦ – solid, stranded (front/back terminal slot)		35/35 mm²
		18...4/18...10 AWG
Cross-section of wire – flexible (front/back terminal slot)		25/10 mm²
Multi-wire rating per UL, CSA		1 wire, 18 . . . 4 AWG
		2-4 wires‡, 18 . . . 10 AWG
Cross-section of bus bars (back terminal slot)		10 mm²
Tightening torque	IEC	2.8 N•m
	UL/CSA	AWG 18...16: 13.3 in•lb. AWG 14...10: 17.7 in•lb. AWG 8...4: 39.8 in•lb.
Screwdriver		No. 2 Pozidrive
Mounting		DIN rail (EN 60715, 35mm) with fast clip
Mounting position		Any
Supply		Optional
Approximate Dimensions and Weight		
Pole dimension (H x D x W)		88 x 69 x 17.5 mm
Pole weight		115 g (4.1 oz.)
Combination with Auxiliary Elements		
Auxiliary contact		Yes
Signal contact		Yes
Shunt trip		Yes

♦ 35mm² self-declared, not included in IEC/EN approval.

∆ Refer to the ambient temperature derating tables.

‡ Wires must be of like size and stranding. Up to two wires per terminal slot.

Power Loss Due to Current

Rated Current [A]	Power Loss Per Pole [W]		Rated Current [A]	Power Loss Per Pole [W]
0.5	1.4		13	2.3
1	1.4		15	2.4
2	1.8		16	2.5
3	1.6		20	2.5
4	1.8		25	3.2
5	1.9		30	3.5
6	2.0		32	3.7
7	1.1		40	4.5
8	1.5		50	4.5
10	2.1		63	5.4

Zero-stack Derating

The installation of several miniature circuit breaker side by side with rated current on all poles requires a correction factor to the rated current (not required if spacers are used).

No. of Adjacent Devices	Factor
1	1
2,3	0.9
4,5	0.8
≥ 6	0.75

Approximate Dimensions

Note: Dimensions are shown in millimeters (inches). Dimensions are not intended for manufacturing purposes.

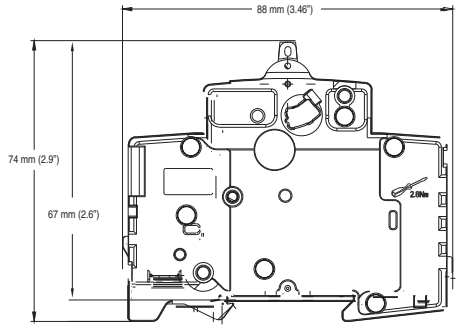

1-Pole

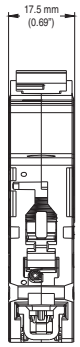

1-Pole

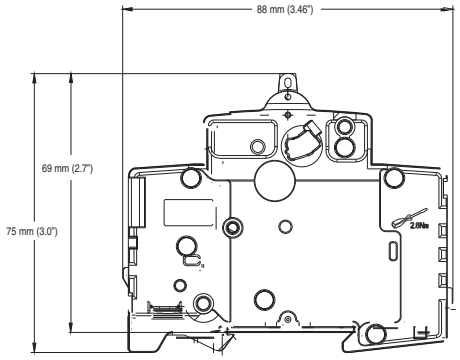

1 Pole + N, 2-, 3-, 3 Pole + N

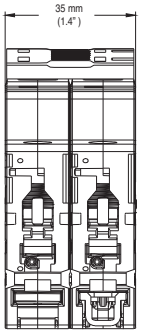

1 Pole + N, 2-Pole

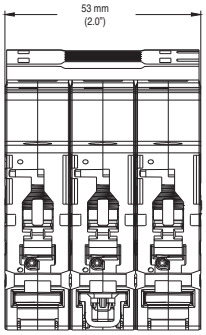

3-Pole

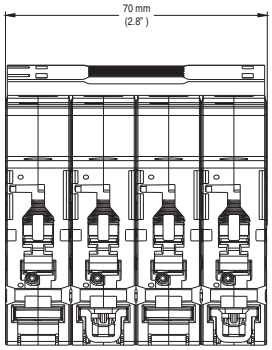

3-Pole + N

Ambient Temperature Derating

Note: Application below 0º C is for non-condensing atmosphere. Care should be taken for applications below 0 °C. These devices are not certified to operate correctly in the presence of ice.

Bulletin 1492-SP
Temperature Derating, UL
Reference temperature = 40 °C

Current Rating	Ambient temperature (°C)									
(A)	-25	-20	-10	0	10	20	30	40	50	55
0.5	0.6	0.6	0.6	0.6	0.6	0.5	0.5	0.5	0.5	0.5
1	1.2	1.2	1.2	1.1	1.1	1.1	1.0	1	1.0	0.9
2	2.5	2.4	2.4	2.3	2.2	2.1	2.1	2	1.9	1.9
3	3.7	3.7	3.6	3.4	3.3	3.2	3.1	3	2.9	2.8
4	5.0	4.9	4.7	4.6	4.4	4.3	4.1	4	3.9	3.8
5	6.2	6.1	5.9	5.7	5.6	5.4	5.2	5	4.8	4.7
6	7.4	7.3	7.1	6.9	6.7	6.4	6.2	6	5.8	5.7
7	8.7	8.6	8.3	8.0	7.8	7.5	7.3	7	6.7	6.6
8	9.9	9.8	9.5	9.2	8.9	8.6	8.3	8	7.7	7.6
10	12.4	12.2	11.9	11.5	11.1	10.7	10.4	10	9.6	9.4
13	16.1	15.9	15.4	14.9	14.4	14.0	13.5	13	12.5	12.3
15	18.6	18.3	17.8	17.2	16.7	16.1	15.6	15	14.4	14.2
16	19.8	19.6	19.0	18.4	17.8	17.2	16.6	16	15.4	15.1
20	24.8	24.4	23.7	23.0	22.2	21.5	20.7	20	19.3	18.9
25	31.0	30.6	29.6	28.7	27.8	26.9	25.9	25	24.1	23.6
30	37.2	36.7	35.6	34.4	33.3	32.2	31.1	30	28.9	28.3
32	39.7	39.1	37.9	36.7	35.6	34.4	33.2	32	30.8	30.2
40	49.6	48.9	47.4	45.9	44.4	43.0	41.5	40	38.5	37.8
50	62.0	61.1	59.3	57.4	55.6	53.7	51.9	50	48.2	47.2
63	78.2	77.0	74.7	72.3	70.0	67.7	65.3	63	60.7	59.5

Bulletin 1492-SP
Temperature Derating, IEC
Reference temperature = 30 °C

Current Rating	Ambient temperature (°C)									
(A)	-25	-20	-10	0	10	20	30	40	50	55
0.5	0.6	0.6	0.6	0.6	0.5	0.5	0.5	0.5	0.5	0.5
1	1.2	1.2	1.1	1.1	1.1	1.0	1	1.0	0.9	0.9
2	2.4	2.4	2.3	2.2	2.1	2.1	2	1.9	1.9	1.8
3	3.6	3.6	3.4	3.3	3.2	3.1	3	2.9	2.8	2.7
4	4.8	4.7	4.6	4.4	4.3	4.1	4	3.9	3.7	3.6
5	6.0	5.9	5.7	5.6	5.4	5.2	5	4.8	4.6	4.5
6	7.2	7.1	6.9	6.7	6.4	6.2	6	5.8	5.6	5.4
7	8.4	8.3	8.0	7.8	7.5	7.3	7	6.7	6.5	6.4
8	9.6	9.5	9.2	8.9	8.6	8.3	8	7.7	7.4	7.3
10	12.0	11.9	11.5	11.1	10.7	10.4	10	9.6	9.3	9.1
13	15.6	15.4	14.9	14.4	14.0	13.5	13	12.5	12.0	11.8
15	18.1	17.8	17.2	16.7	16.1	15.6	15	14.4	13.9	13.6
16	19.3	19.0	18.4	17.8	17.2	16.6	16	15.4	14.8	14.5
20	24.1	23.7	23.0	22.2	21.5	20.7	20	19.3	18.5	18.2
25	30.1	29.6	28.7	27.8	26.9	25.9	25	24.1	23.2	22.7
30	36.1	35.6	34.4	33.3	32.2	31.1	30	28.9	27.8	27.2
32	38.5	37.9	36.7	35.6	34.4	33.2	32	30.8	29.6	29.0
40	48.1	47.4	45.9	44.4	43.0	41.5	40	38.5	37.0	36.3
50	60.2	59.3	57.4	55.6	53.7	51.9	50	48.2	46.3	45.4
63	75.8	74.7	72.3	70.0	67.7	65.3	63	60.7	58.3	57.2

Tripping Characteristics*

B Curve

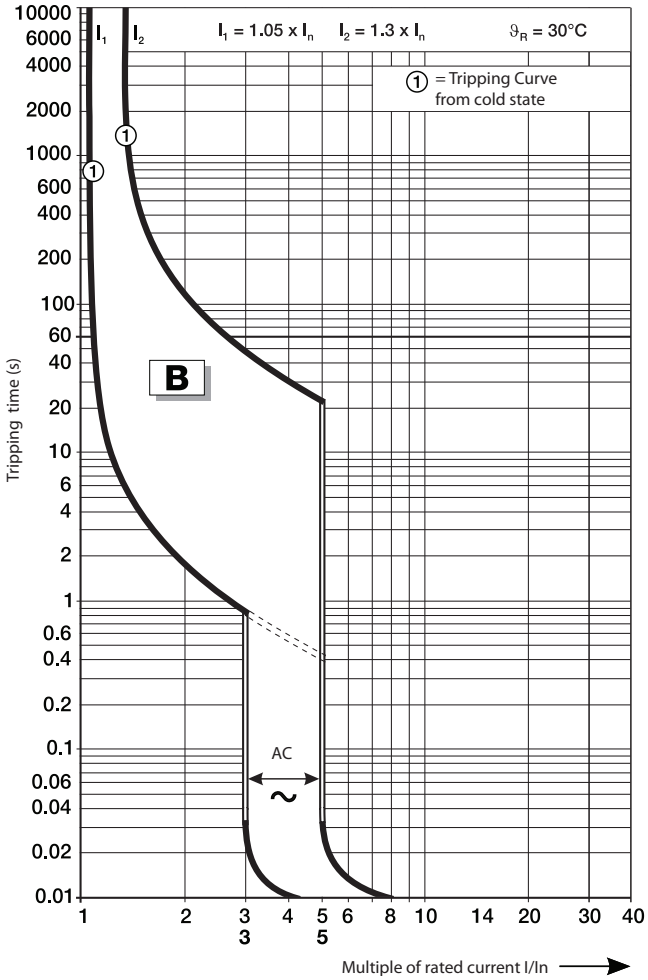

* DC trip curves:
When using 1492-SPM.. on DC applications or DC loads, please refer to AC trip curves and times and use a factor of 1.5 for the magnetic instantaneous trip times the continuous current rating (In).
For B trip curve = 4.5 to 7.5 multiple of the rated current (I/ In).
The thermal trip times remain the same for both AC and DC applications.

B and C Curve - 230/400V AC Let-through Energy

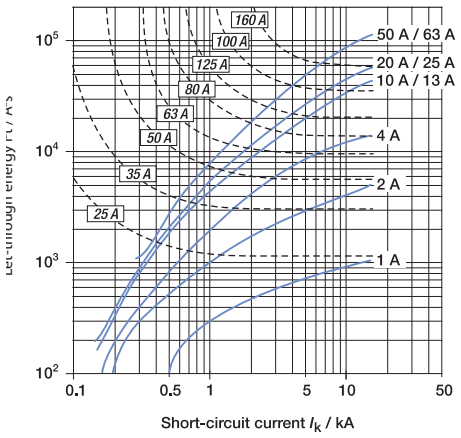

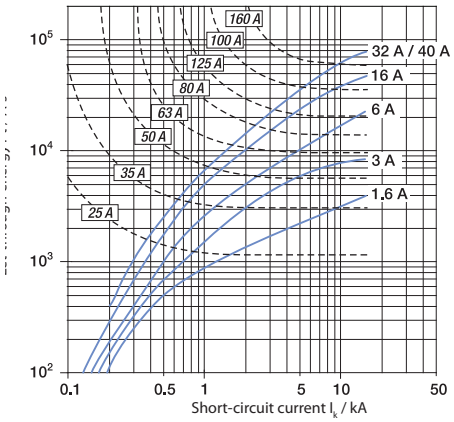

Tripping Characteristics*

C Curve

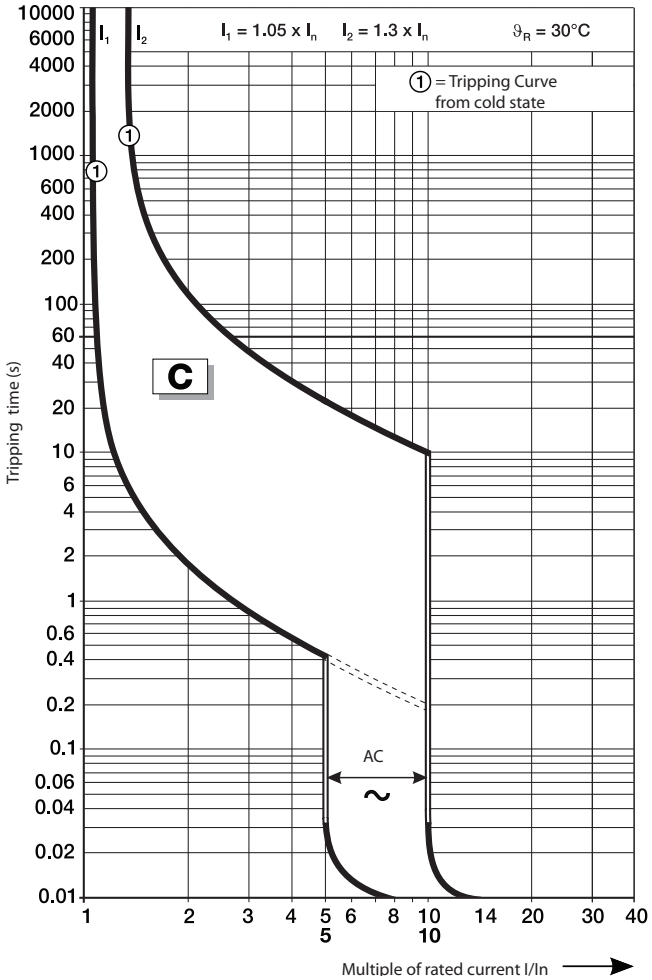

* DC trip curves:
When using 1492-SPM.. on DC applications or DC loads, please refer to AC trip curves and times and use a factor of 1.5 for the magnetic instantaneous trip times the continuous current rating (In).
For C trip curve = 7.5 to 15 multiple of the rated current (I/ In).
The thermal trip times remain the same for both AC and DC applications.

B and C Curve - 230/400V AC Let-through Energy

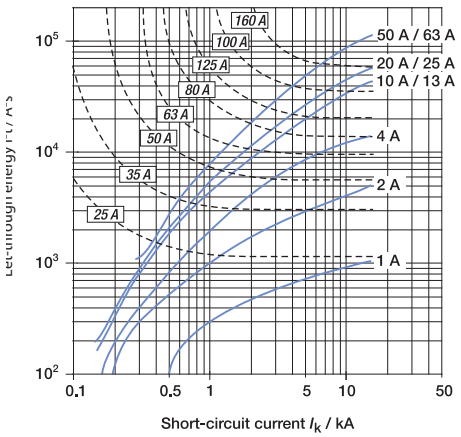

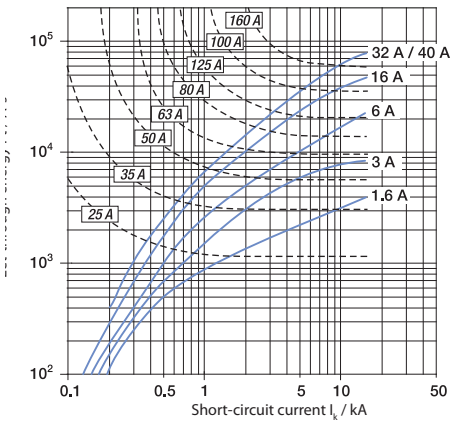

Tripping Characteristics*

D Curve

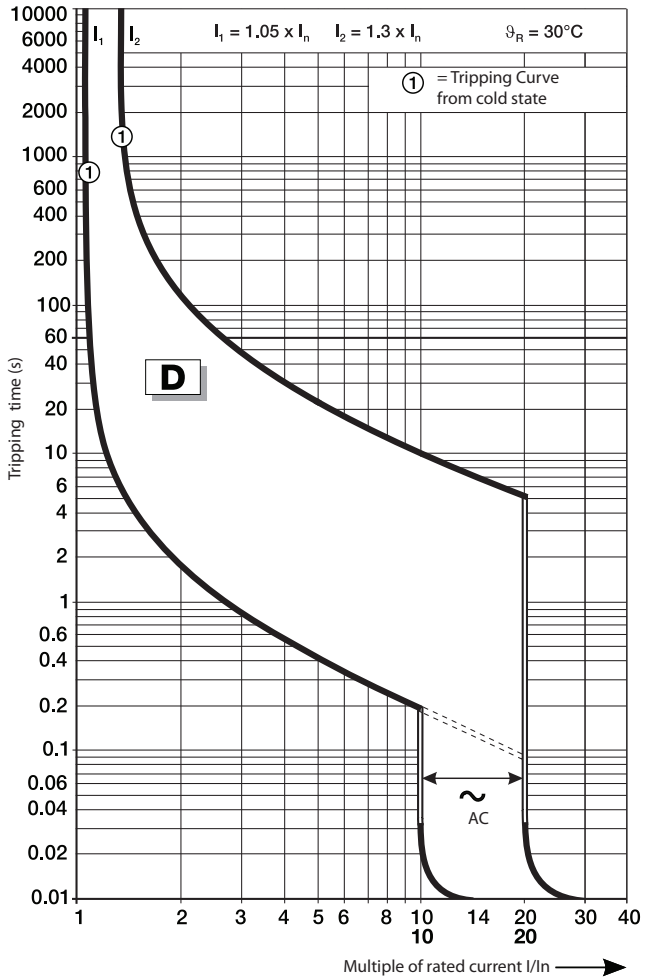

* DC trip curves:
When using 1492-SPM.. on DC applications or DC loads, please refer to AC trip curves and times and use a factor of 1.5 for the magnetic instantaneous trip times the continuous current rating (In).
For D trip curve = 15 to 30 multiple of the rated current (I/ In).
The thermal trip times remain the same for both AC and DC applications.

D Curve - 230/400V AC Let-through Energy

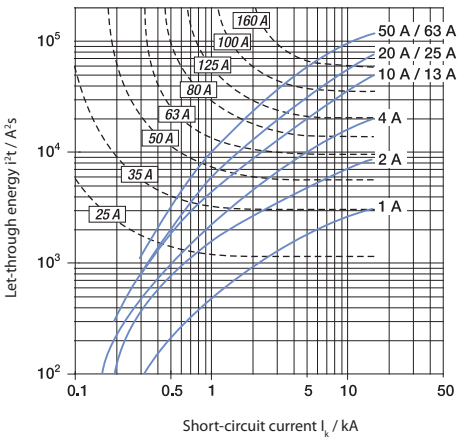

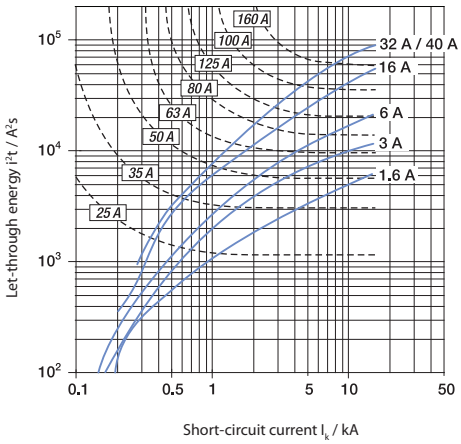

Accessories

Right Mount

Photo	Product Description ‡★Δ	Contacts	Standards	Certifications	UL/CSA Max. Current/Voltage	IEC Ratings Current/Voltage	Cat. No.
	Shunt Trip		UL 1077 CSA 22.2 No. 235	UL Recognized CSA Certified CE Marked	110...415V AC 110-250V DC	110...415V AC 110-250V DC	189-AST1
			UL 1077 CSA 22.2 No. 235	UL Recognized CSA Certified CE Marked	12...60V AC/DC	12...60V AC/DC	189-AST2
	Auxiliary/Signal Contact	1 N.O./N.C. (1 C.O.) 	UL 1077 CSA 22.2 No. 235 EN 60947-5-1 GB 14048.5	UL Recognized CSA Certified CE Marked VDE Certified CCC Certified	1A @ 480 VAC 2A @ 277 VAC 1.5A @ 125 VDC 2A @ 60 VDC 4A @ 24 VDC	2A @ 230 V (AC-14) 1A @ 400 V (AC-14) 1.5A @ 110 V (DC-12) 1A @ 220 V (DC-12) 4A @ 24 V (DC-13) 2A @ 60 V (DC-13)	189-ASCR3
	Auxiliary Contact	1 N.O./N.C. (1 C.O.) 	UL 1077 CSA 22.2 No. 235 EN 60947-5-1 GB 14048.5	UL Recognized CSA Certified CE Marked VDE Certified CCC Certified	1A @ 480 VAC 2A @ 277 VAC 1.5A @ 125 VDC 2A @ 60 VDC 4A @ 24 VDC	2A @ 230 V (AC-14) 1A @ 400 V (AC-14) 1.5A @ 110 V (DC-12) 1A @ 220 V (DC-12) 4A @ 24 V (DC-13) 2A @ 60 V (DC-13)	189-AR3
		1 N.O. + 1 N.C. 	UL 1077 CSA 22.2 No. 235 EN 60947-5-1 GB 14048.5	UL Recognized CSA Certified CE Marked VDE Certified CCC Certified	1A @ 400 VAC 2A @ 230 VAC 1A @ 50 VDC 2A @ 30V DC	2A @ 230 V (AC-14) 1A @ 400 V (AC-14) 2A @ 30V (DC-12) 1A @ 50 V (DC-12) 2A @ 30 V (DC-13) 1A @ 50 V (DC-13)	189-AR11
		2 N.C. 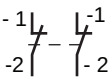	UL 1077 CSA 22.2 No. 235 EN 60947-5-1 GB 14048.5	UL Recognized CSA Certified CE Marked VDE Certified CCC Certified	1A @ 400 VAC 2A @ 230 VAC 1A @ 50 VDC 2A @ 30 VDC	2A @ 230 V (AC-14) 1A @ 400 V (AC-14) 2A @ 30V (DC-12) 1A @ 50 V (DC-12) 2A @ 30 V (DC-13) 1A @ 50 V (DC-13)	189-AR02
		2 N.O. 	UL 1077 CSA 22.2 No. 235 EN 60947-5-1 GB 14048.5	UL Recognized CSA Certified CE Marked VDE Certified CCC Certified	1A @ 400 VAC 2A @ 230 VAC 1A @ 50 VDC 2A @ 30 VDC	2A @ 230 V (AC-14) 1A @ 400 V (AC-14) 2A @ 30V (DC-12) 1A @ 50 V (DC-12) 2A @ 30 V (DC-13) 1A @ 50 V (DC-13)	189-AR20

‡ A maximum of one C.O. type signal contact, and two C.O. type auxiliary contacts ***OR*** three C.O. type auxiliary contacts may be installed with or without one shunt trip per 1492-SP.

★ A maximum of two 189-AR11, -AR02, or -AR20 auxiliary contacts may be installed per 1492-SP. They may not be combined with shunt trips or C.O. type contacts.

Δ A maximum of four right mount accessories of any type may be installed per 1492-SP. The shunt trip must be mounted closest to 1492-SP, then the signal contact, then the auxiliary contact(s). For allowed combinations, and installation instructions please contact your local Rockwell Automation sales office or Allen-Bradley distributor.

Accessories

Left Mount

Photo	Product Description ★	Contacts	Standards	Certifications	UL/CSA Max. Current/Voltage	IEC Ratings Current/Voltage	Cat. No.
	Auxiliary Contact	1 N.O. + 1 N.C. 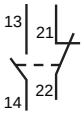	EN 60947-5-1	CE Marked	—	2A @ 230 V (AC-14) 1A @ 400 V (AC-14) 1.5A @ 110 V (DC-12) 1A @ 220 V (DC-12) 4A @ 24 V (DC-13) 2A @ 60 V (DC-13)	189-AL11
		2 N.C. 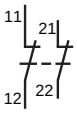	EN 60947-5-1	CE Marked	—	2A @ 230 V (AC-14) 1A @ 400 V (AC-14) 1.5A @ 110 V (DC-12) 1A @ 220 V (DC-12) 4A @ 24 V (DC-13) 2A @ 60 V (DC-13)	189-AL02
		2 N.O. 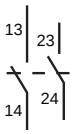	EN 60947-5-1	CE Marked	—	2A @ 230 V (AC-14) 1A @ 400 V (AC-14) 1.5A @ 110 V (DC-12) 1A @ 220 V (DC-12) 4A @ 24 V (DC-13) 2A @ 60 V (DC-13)	189-AL20

★ Only one left mount auxiliary contact may be installed per 1492-SP.

Bottom Mount

Photo	Product Description Δ	Contacts	Standards	Certifications‡	UL/CSA Max. Current/Voltage	IEC Ratings Current/Voltage	Cat. No.
	Auxiliary Contact	1 N.C. 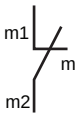	UL1077 CSA C22.2 No.235 EN 60947-5-1 GB 14048.5	UL Recognized CSA Certified CE Marked CCC Certified	2 A @ 230V AC 2 A @ 50V DC	2A @ 230 V (AC-14) 2A @ 30V (DC-12) 1A @ 50 V (DC-12) 2A @ 30 V (DC-13) 1A @ 50 V (DC-13)	189-AB01
		1 N.O. 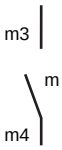	UL1077 CSA C22.2 No.235 EN 60947-5-1 GB 14048.5	UL Recognized CSA Certified CE Marked CCC Certified	2 A @ 230V AC 2 A @ 50V DC	2A @ 230 V (AC-14) 2A @ 30V (DC-12) 1A @ 50 V (DC-12) 2A @ 30 V (DC-13) 1A @ 50 V (DC-13)	189-AB10

Δ Only one bottom mount auxiliary contact may be installed per 1492-SP.

‡ Bottom mount auxiliaries show a CE Mark on the product instruction sheet and packaging, but not on the product itself.

Toggle Mount

Photo	Product Description	Cat. No.
	Lock-out attachment for 1-pole MCB	189-ALOA1
	Lock-out attachment for multi-pole MCB	189-ALOA2

Accessory Approximate Dimensions

Note: Dimensions are shown in millimeters (inches). Dimensions are not intended for manufacturing purposes.

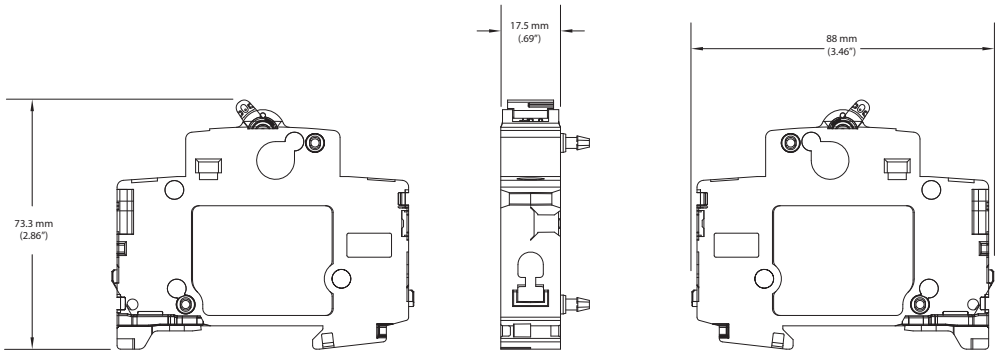

189-AST1 and 189-AST2

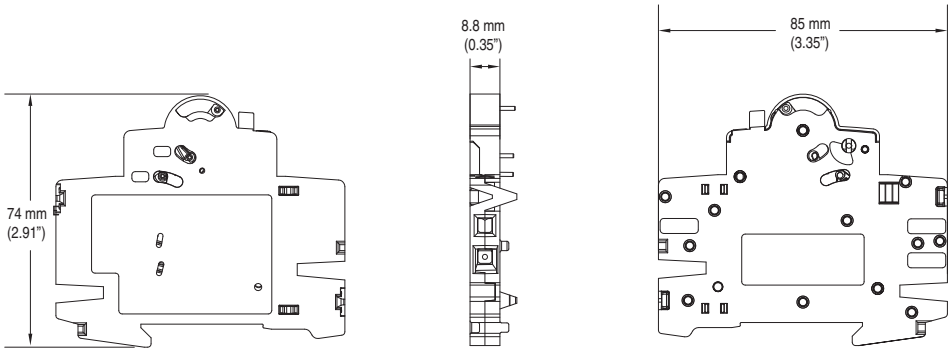

189-ASCR3

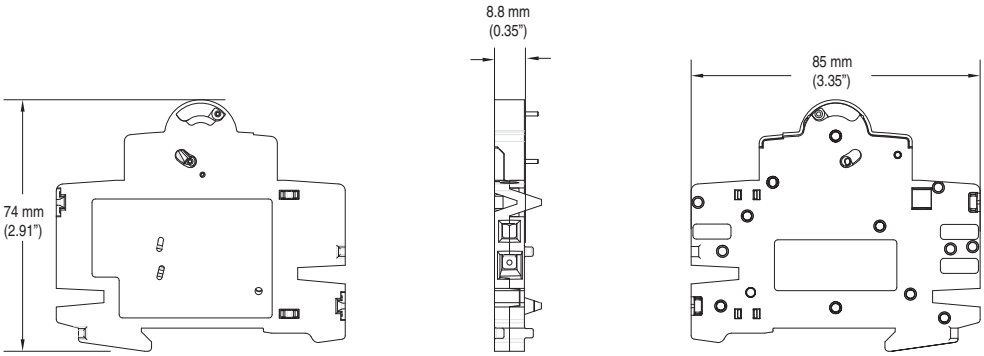

189-AR3

Accessory Approximate Dimensions

Note: Dimensions are shown in millimeters (inches). Dimensions are not intended for manufacturing purposes.

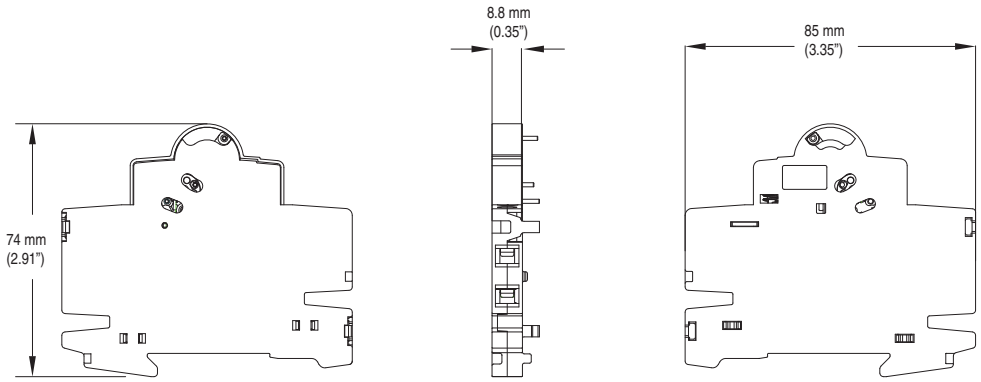

189-AR11, 189-AR02, 189-AR20

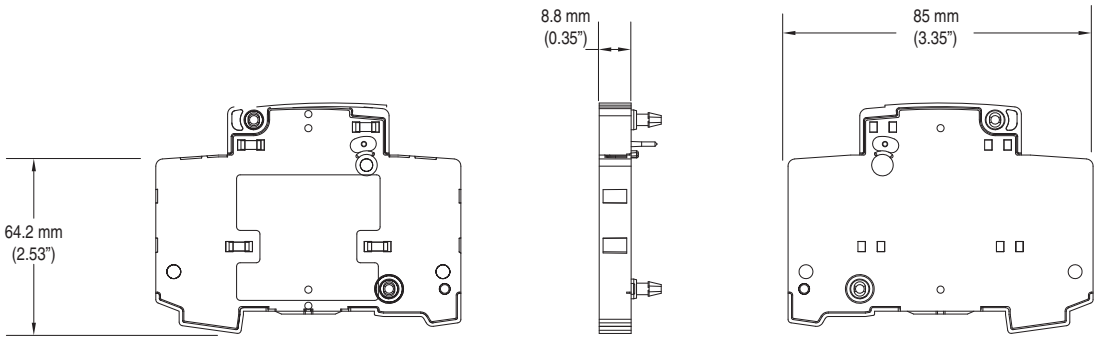

189-AL11, 189-AL02, and 189-AL20

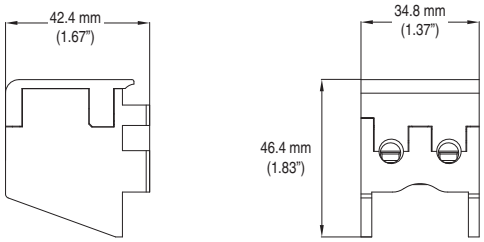

189-AB01 and 189-AB10

Bus Bars

1492-SP Bus Bars

Description	Pins	Rated Current [A] ‡	Pkg. Qty.	Cat. No. ★
1-Phase	57	100 A	1	1492-A1B1
	57	80 A	1	1492-A1B8
1-Phase with aux. contact	37	100 A	1	1492-A1B1H
	37	80 A	1	1492-A1B8H
2-Phase	56	100 A	1	1492-A2B1
	56	80 A	1	1492-A2B8
2-Phase with aux. contact	46	100 A	1	1492-A2B1H
	46	80 A	1	1492-A2B8H
3-Phase	57	100 A	1	1492-A3B1
	57	80 A	1	1492-A3B8
3-Phase with aux. contact	48	100 A	1	1492-A3B1H
	48	80 A	1	1492-A3B8H

★ cULus, UL508, EN 60947-1, CE Marked

‡ Refer to the diagrams below for Feeder Terminal & Bus Bar Current Distribution

1492-SP Bus Bar Accessories

Description	Pkg. Qty.	Cat. No. ★
Terminal Power Feed, 35 mm², for 1-phase bus bar	10	1492-AAT1LP
Terminal Power Feed, 35 mm², for 2- and 3-phase bus bar	10	1492-AAT1S
Dedicated Power Feed, 50 mm²	10	1492-AAT2
End Cover for 1-phase bus bar	10	1492-A1E
End Cover for 2- or 3-phase bus bar	10	1492-AME
Protective Shroud for unused pins	10	1492-AAP

★ cULus, UL508, EN 60947-1, CE Marked

Feeder Terminal & Bus Bar Current Distribution

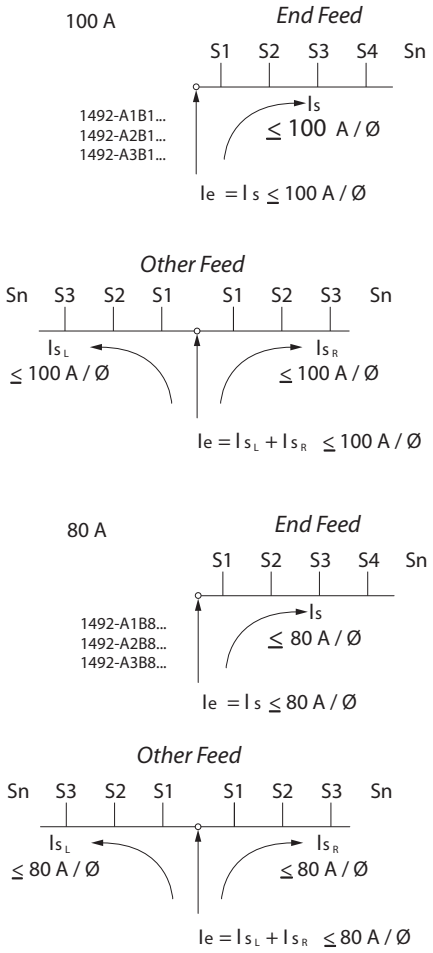

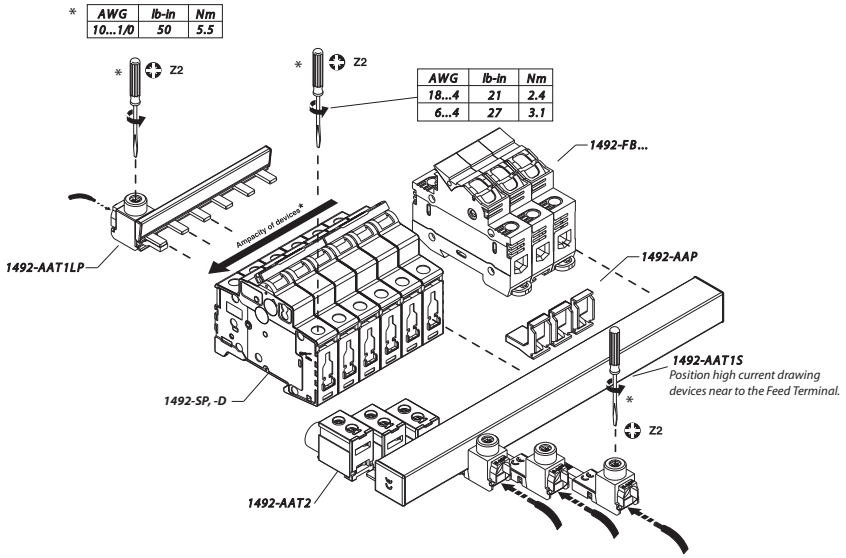

Bus Bar Approximate Dimensions

Note: Dimensions are shown in millimeters (inches). Dimensions are not intended for manufacturing purposes.

1-Phase Bus Bars

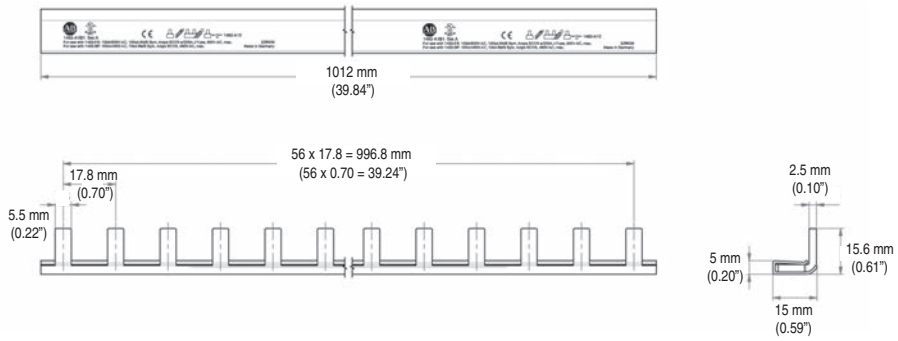

1492-A1B1

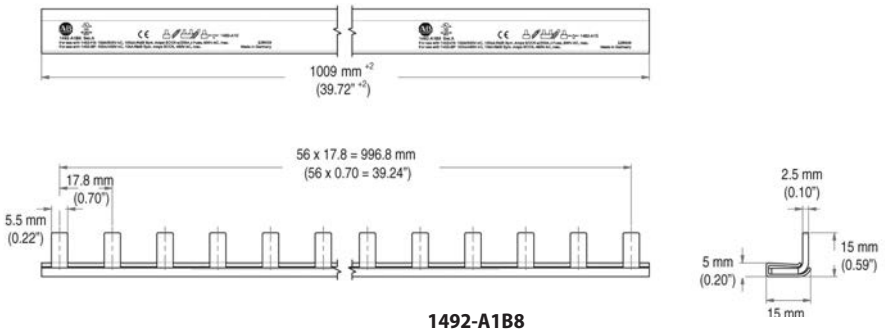

1492-A1B8

1-Phase Bus Bars, with Auxiliary Contact

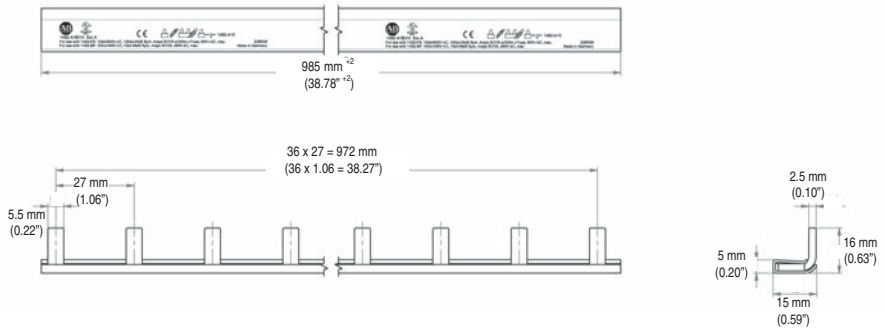

1492-A1B1H

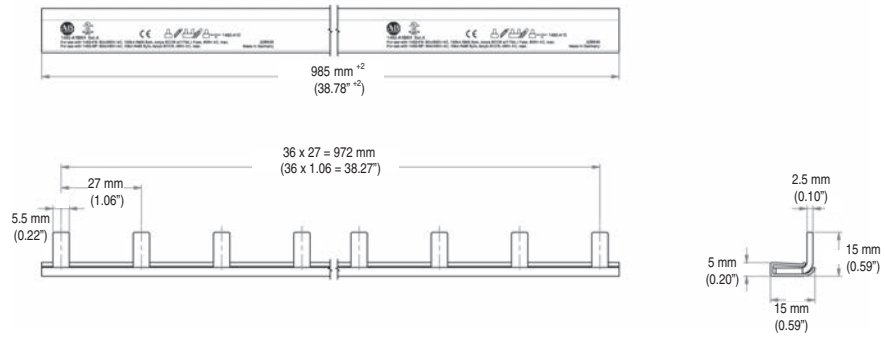

1492-A1B8H

Bus Bar Approximate Dimensions

Note: Dimensions are shown in millimeters (inches). Dimensions are not intended for manufacturing purposes.

2-Phase Bus Bars

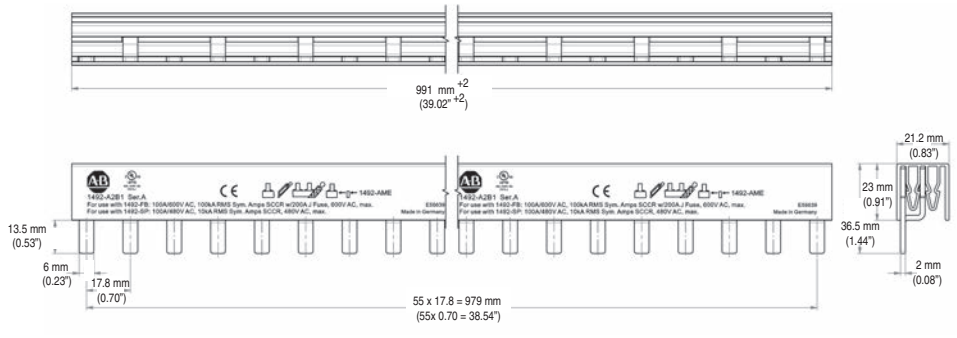

1492-A2B1

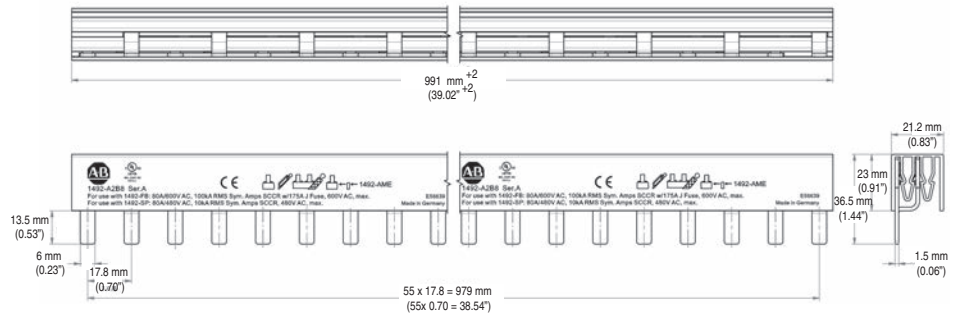

1492-A2B8

2-Phase Bus Bars, with Auxiliary Contact

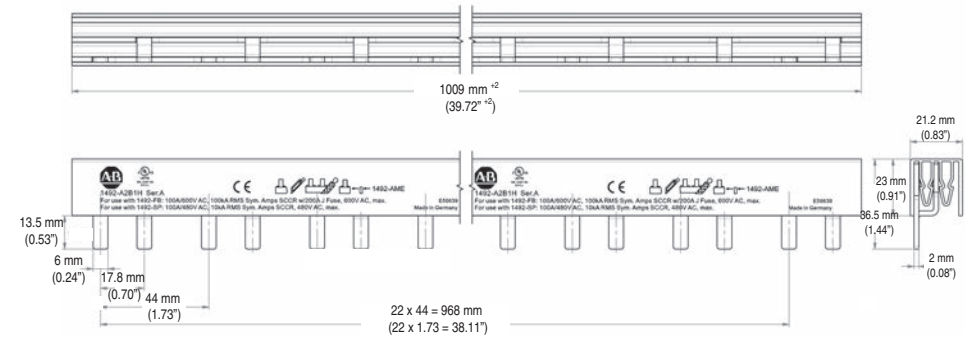

1492-A2B1H

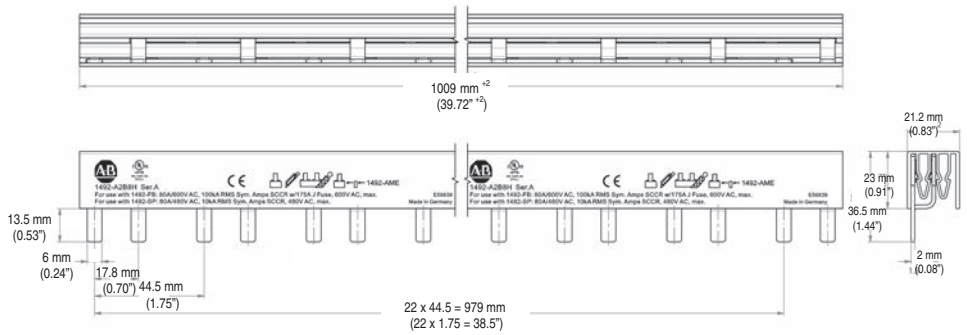

1492-A2B8H

Bus Bar Approximate Dimensions

Note: Dimensions are shown in millimeters. Dimensions are not intended for manufacturing purposes.

3-Phase Bus Bars

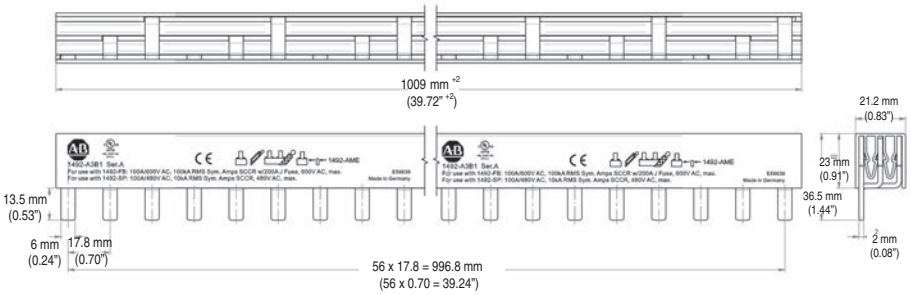

1492-A3B1

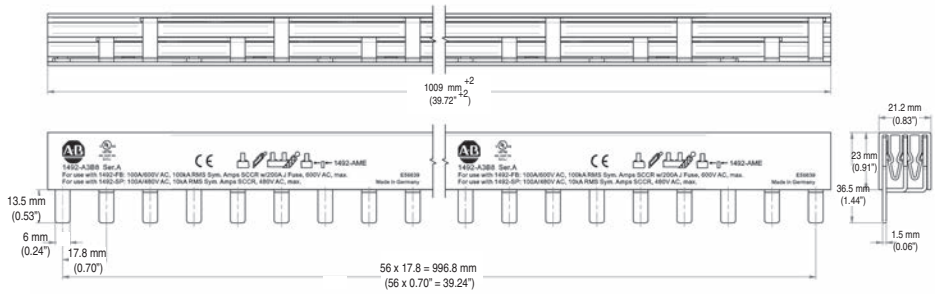

1492-A3B8

3-Phase Bus Bars, with Auxiliary Contact

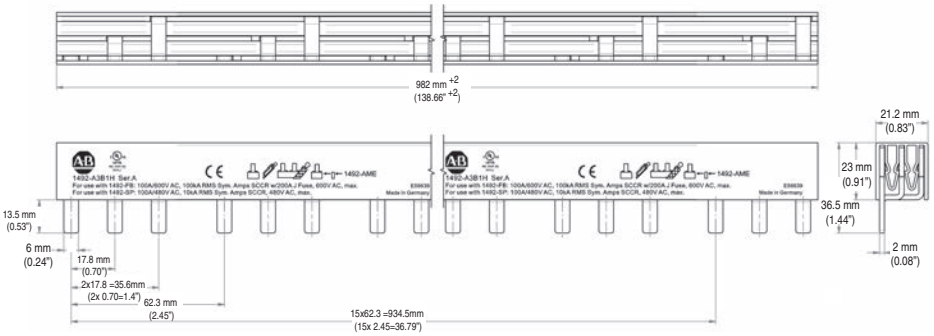

1492-A3B1H

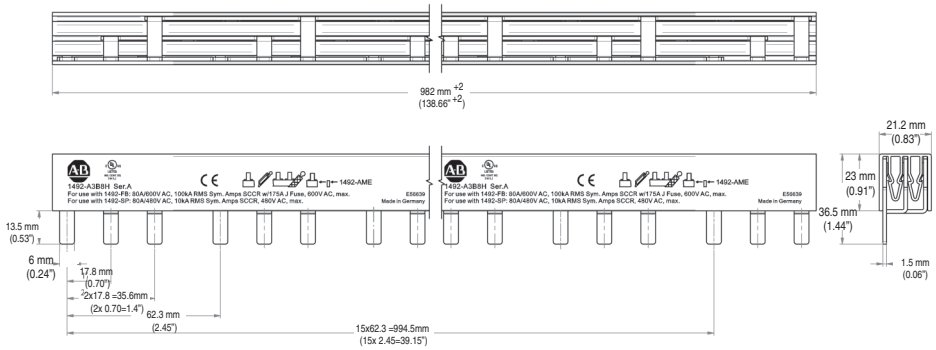

1492-A3B8H

Bus Bar Accessory Approximate Dimensions

Note: Dimensions are shown in millimeters. Dimensions are not intended for manufacturing purposes.

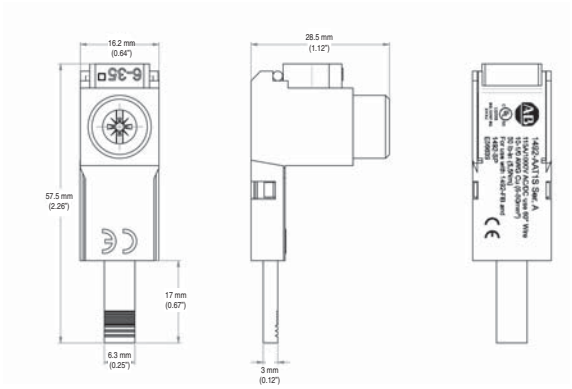

1492-AAT1S

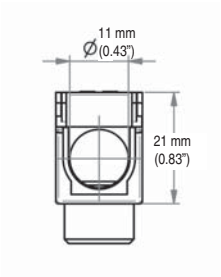

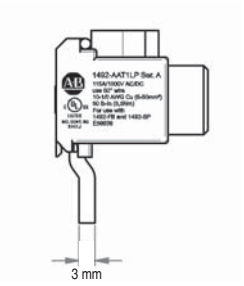

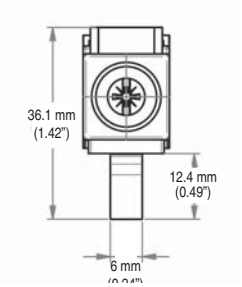

1492-AAT1LP

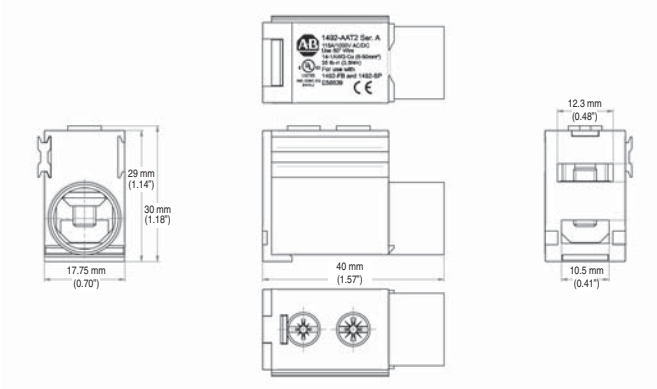

1492-AAT2

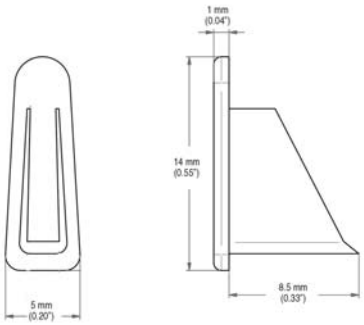

1492-A1E

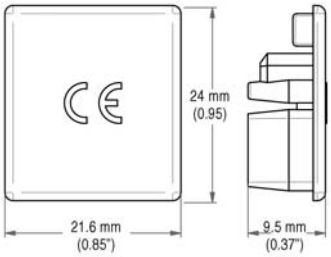

1492-AME

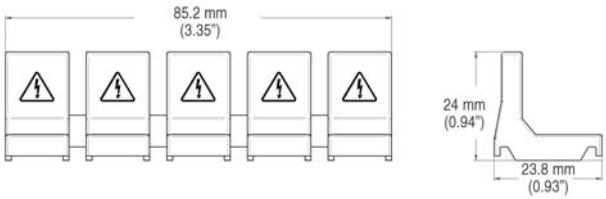

1492-AAP

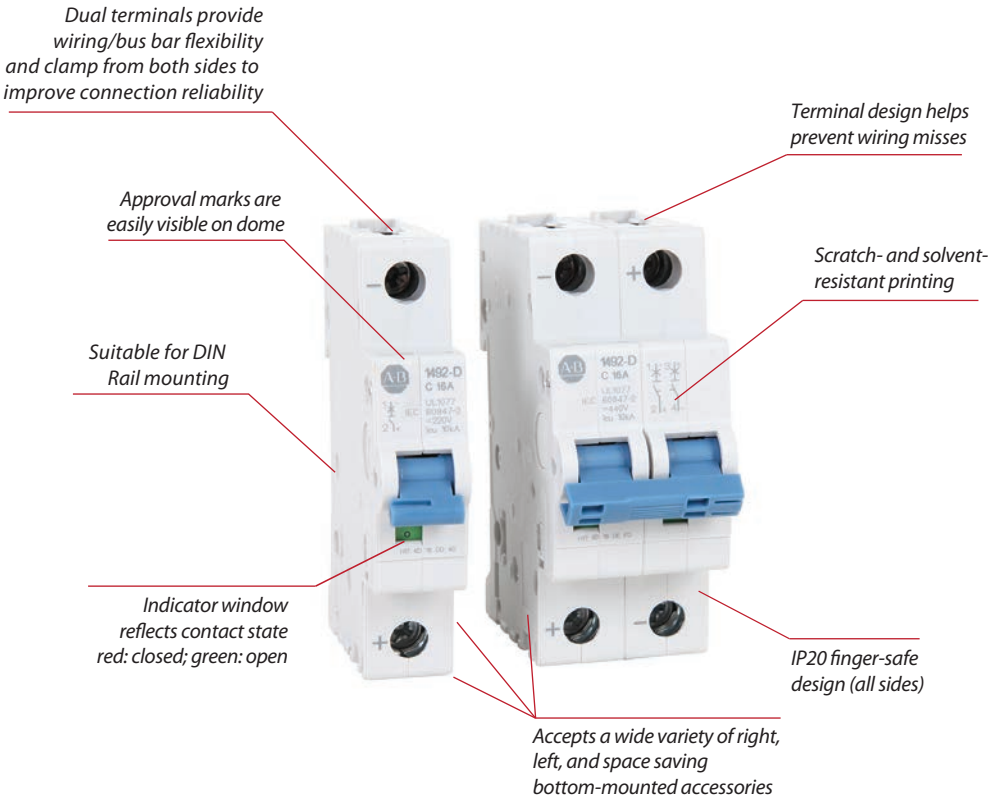

Bulletin 1492-D Miniature Circuit Breakers provide overcurrent and short circuit protection for higher voltage DC circuits. These devices are also Miniature Circuit Breakers as defined by IEC Standards.

These thermal magnetic breakers are offered in two pole variants and a wide range of current ratings to match the appropriate level of protection for your application. They may be used with UL 508 Listed bus bars for convenience in panel assembly, a wide range of left-, right- and space saving bottom-mount accessories, and lock out attachments for safety during maintenance.

1492-D Circuit Breakers

Rated Voltage	UL/CSA: Max. 500V DC (2-pole) IEC: U_e : Max. 440V DC (2-pole)
Interrupting Capacity	UL/CSA: 10 kA IEC: 10 kA
Current Ratings	0.5...63 A
Poles	1, 2
Trip Curves	C
Standards Compliance	UL 1077 CSA C22.2 No. 235 EN 60947-2
Certifications	UL Recognized, File No. E65138 CSA Certified, File No. 259391 CE Marked VDE Certified RoHS Compliant

Features

- Specially designed for higher voltage DC circuits with a permanent magnet to direct the arc into the arc splitters
- Dual terminals provide a more secure connection of up to four wires, or two wires and a bus bar
- Existing installations can be easily upgraded to include an auxiliary using the bottom mounted auxiliary contact options, which require no DIN Rail space
- Installation of up to six accessories on the same circuit breaker
- Superior shock and vibration resistance to prevent nuisance tripping
- Terminal design helps prevent wiring misses by directing wires into the terminal openings, even while tightening
- Single and multi-pole toggle mount lock out attachments available for Lockout/Tagout (LOTO)
- RoHS compliant and fully-recyclable device

Catalog Number Explanation

Note: Examples given in this section are for reference purposes. This basic explanation should not be used for product selection; some combinations may not produce a valid catalog number.

1492	-	D	1	C	010
		a	*b*	*c*	*d*

a

Voltage Type	
Code	**Description**
D	DC Circuit Breaker

b

Poles	
Code	**Description**
1	1-Pole
2	2-Pole

c

Trip Curve	
Code	**Trip Curve**
C	Trip Curve C

d

Rated Current (I_n)	
Code	**Current [A]**
005	0.5
010	1
016	1.6
020	2
030	3
040	4
060	6
080	8
100	10
130	13
160	16
200	20
250	25
320	32
400	40
500	50
630	63

Product Selection

1-Pole DC Circuit Breakers

Photo/Wiring Diagram	Continuous Current Rating (I_n) [A]	Trip Curve C Inductive 5…10 I_n Cat. No.
	0.5	1492-D1C005
	1	1492-D1C010
	1.6	1492-D1C016
	2	1492-D1C020
	3	1492-D1C030
	4	1492-D1C040
	6	1492-D1C060
	8	1492-D1C080
	10	1492-D1C100
	13	1492-D1C130
	16	1492-D1C160
	20	1492-D1C200
	25	1492-D1C250
	32	1492-D1C320
	40	1492-D1C400
	50	1492-D1C500
	63	1492-D1C630

2-Pole DC Circuit Breakers

Photo/Wiring Diagram	Continuous Current Rating (I_n) [A]	Trip Curve C Inductive 5…10 I_n Cat. No.
	0.5	1492-D2C005
	1	1492-D2C010
	1.6	1492-D2C016
	2	1492-D2C020
	3	1492-D2C030
	4	1492-D2C040
	6	1492-D2C060
	8	1492-D2C080
	10	1492-D2C100
	13	1492-D2C130
	16	1492-D2C160
	20	1492-D2C200
	25	1492-D2C250
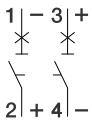	32	1492-D2C320
	40	1492-D2C400
	50	1492-D2C500
	63	1492-D2C630

Specifications

Electrical Ratings		
Poles		1, 2
Tripping characteristics		C
Rated current (I_n)		0.5 . . .63 A
Rated frequency (f)		0 Hz (DC only)
Rated insulation voltage U_i per IEC/EN 60664-1		250V AC (phase to ground), 440V AC (phase to phase)
Overvoltage category		III
Pollution degree		3
Data per UL/CSA		
Rated voltage	1-pole	250V DC
	2-pole	500V DC
Rated interrupting capacity per UL 1077		10 kA
Application		Supplementary Protector for DC application use; application codes: TC2, OL0, SC: U1, 250V dc, 10kA (1 pole); TC2, OL0, SC: U1, 500V dc, 10kA (2 pole)
Reference temperature for tripping characteristics		25 °C
Electrical endurance		6,000 ops
Data per IEC/EN 60947-2		
Rated operational voltage (U_e)	1-pole	220V DC
	2-pole	440V DC
Highest supply or utilization voltage (U_{max})	1-pole	250V DC
	2-pole	500V DC
Min. operating voltage		12V DC
Rated ultimate short-circuit breaking capacity (I_{cu})		10 kA
Rated service short-circuit breaking capacity (I_{cs})		10 kA
Rated impulse withstand voltage Uimp. (1.2/50µs)		4 kV (test voltage 6.2kV at sea level, 5kV at 2,000m)
Dielectric test voltage		2 kV (50/60Hz, 1 min.)
Reference temperature for tripping characteristics		55 °C
Electrical endurance 1 cycle (2s - ON, 13s - OFF, $I_n \leq 32A$), 1 cycle (2s - ON, 28s - OFF, $I_n > 32A$)		1,500 ops.

Mechanical Data		
Housing		Insulation group II, RAL 7035
Indicator window		red ON/green OFF
Protection degree per EN 60529		IP20, IP40 in enclosure with cover
Mechanical endurance		20,000 operations
Shock resistance per IEC/EN 60068-2-27		25 g - 2 shocks - 13 ms
Vibration resistance per IEC/EN 60068-2-6		5g - 20 cycles at 5...150...5 Hz with load 0.8In
Environmental		
Environmental conditions (damp heat) per IEC/EN 60068-2-30		28 cycles with 55°C/90-96% and 25°C/95-100%
Ambient temperature∆		-25...+55 °C
Storage temperature		-40...+70 °C
Installation		
Terminal		Dual terminal
Cross-section of wire ◆ – solid, stranded (front/back terminal slot)		35/35 mm²
		18...4/18...10 AWG
Cross-section of wire – flexible (front/back terminal slot)		25/10 mm²
Multi-wire rating per UL, CSA		1 wire, 18 . . . 4 AWG
		2-4 wires‡, 18 . . . 10 AWG
Cross-section of bus bars (back terminal slot)		10 mm²
Tightening torque	IEC	2.8 N•m
	UL/CSA	AWG 18...16: 13.3 in•lb. AWG 14...10:17.7 in•lb. AWG 8...4: 39.8 in•lb.
Screwdriver		No. 2 Pozidrive
Mounting		DIN rail (EN 60715, 35mm) with fast clip
Mounting position		Any
Supply		Note polarity of device
Approximate Dimensions and Weight		
Pole dimension (H x D x W)		88 x 69 x 17.5 mm
Pole weight		125 g (4.5 oz.)
Combination with Auxiliary Elements		
Auxiliary contact		Yes
Signal contact		Yes
Shunt trip		Yes

◆ 35mm² self-declared, not included in IEC/EN approval.

∆ Refer to the ambient temperature derating tables.

‡ Wires must be of like size and stranding. Up to two wires per terminal slot.

Power Loss Due to Current

Rated Current [A]	Power Loss Per Pole [W]		Rated Current [A]	Power Loss Per Pole [W]
0.5	1.4		13	2.3
1	1.4		15	2.4
2	1.8		16	2.5
3	1.6		20	2.5
4	1.8		25	3.2
5	1.9		30	3.5
6	2.0		32	3.7
7	1.1		40	4.5
8	1.5		50	4.5
10	2.1		63	5.4

Zero-stack Derating

The installation of several miniature circuit breaker side by side with rated current on all poles requires a correction factor to the rated current (not required if spacers are used).

No. of Adjacent Devices	Factor
1	1
2,3	0.9
4,5	0.8
≥ 6	0.75

Approximate Dimensions

Note: Dimensions are shown in millimeters (inches). Dimensions are not intended for manufacturing purposes.

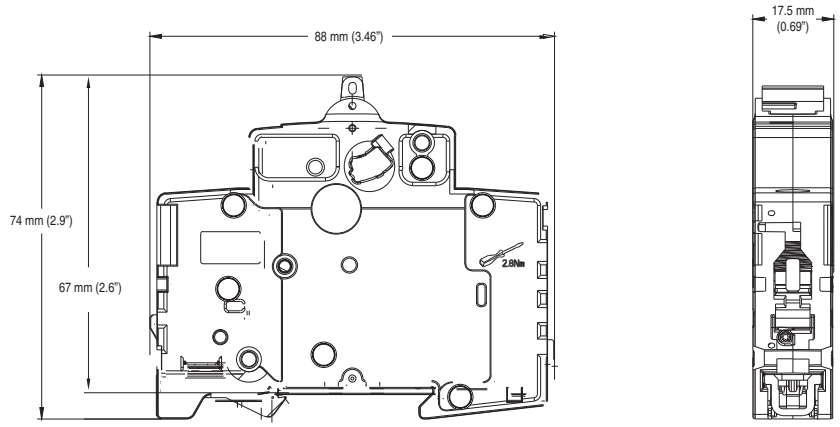

1-Pole

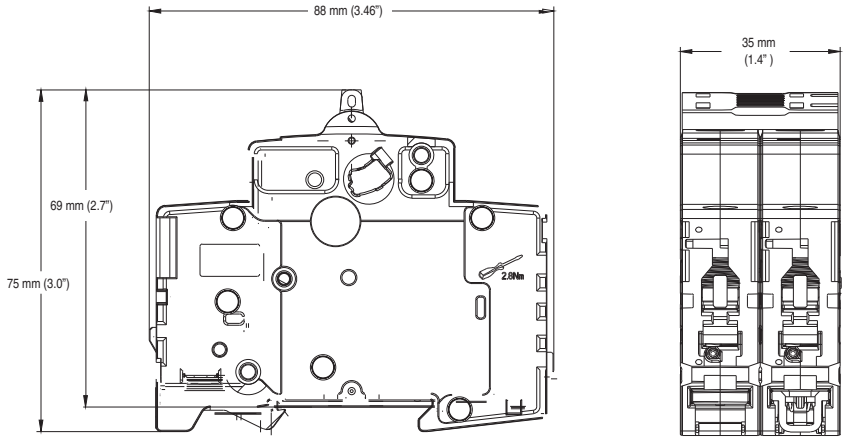

2-Pole

Ambient Temperature Derating

Note: Application below 0º C is for non-condensing atmosphere. Care should be taken for applications below 0 °C. These devices are not certified to operate correctly in the presence of ice.

Bulletin 1492-D
Temperature Derating, UL
Reference temperature = 25 °C

Current Rating (A)	Ambient temperature (°C)										
	-25	-20	-10	0	10	20	25	30	40	50	55
0.5	0.6	0.6	0.6	0.6	0.6	0.5	0.5	0.5	0.5	0.5	0.5
1	1.2	1.2	1.2	1.2	1.1	0.9	1	1.0	1.0	0.9	0.9
1.6	1.8	1.8	1.8	1.8	1.8	1.5	1.6	1.6	1.5	1.5	1.5
2	2.3	2.3	2.3	2.3	2.3	1.9	2	2.0	1.9	1.9	1.8
3	3.5	3.5	3.5	3.5	3.4	2.8	3	3.0	2.9	2.8	2.7
4	4.6	4.6	4.6	4.6	4.5	3.8	4	3.9	3.8	3.7	3.6
6	6.9	6.9	6.9	6.9	6.8	5.6	6	5.9	5.7	5.6	5.5
8	9.2	9.2	9.2	9.2	9.1	7.5	8	7.9	7.6	7.4	7.3
10	11.5	11.5	11.5	11.5	11.4	9.4	10	9.9	9.6	9.3	9.1
13	15.0	15.0	15.0	15.0	14.8	12.2	13	12.8	12.4	12.0	11.8
16	18.4	18.4	18.4	18.4	18.2	15.0	16	15.8	15.3	14.8	14.6
20	23.0	23.0	23.0	23.0	22.7	18.8	20	19.7	19.1	18.5	18.2
25	28.8	28.8	28.8	28.8	28.4	23.5	25	24.6	23.9	23.1	22.8
32	36.8	36.8	36.8	36.8	36.3	30.1	32	31.5	30.6	29.6	29.1
40	46.0	46.0	46.0	46.0	45.4	37.6	40	39.4	38.2	37.0	36.4
50	57.5	57.5	57.5	57.5	56.8	47.0	50	49.3	47.8	46.3	45.5
63	72.5	72.5	72.5	72.5	71.5	59.2	63	62.1	60.2	58.3	57.3

Bulletin 1492-D
Temperature Derating, IEC
Reference temperature = 55 °C

Current Rating (A)	Ambient temperature (°C)									
	-25	-20	-10	0	10	20	30	40	50	55
0.5	0.6	0.6	0.6	0.6	0.6	0.6	0.5	0.5	0.5	0.5
1	1.2	1.2	1.2	1.2	1.1	1.1	1.1	1.0	1.0	1
1.6	2.0	2.0	1.9	1.9	1.8	1.8	1.7	1.7	1.6	1.6
2	2.5	2.5	2.4	2.3	2.3	2.2	2.2	2.1	2.0	2
3	3.7	3.7	3.6	3.5	3.4	3.3	3.2	3.1	3.0	3
4	5.0	4.9	4.8	4.7	4.5	4.4	4.3	4.2	4.1	4
6	7.4	7.4	7.2	7.0	6.8	6.6	6.5	6.3	6.1	6
8	9.9	9.8	9.6	9.3	9.1	8.8	8.6	8.4	8.1	8
10	12.4	12.3	12.0	11.7	11.4	11.1	10.8	10.5	10.2	10
13	16.1	15.9	15.5	15.1	14.8	14.4	14.0	13.6	13.2	13
16	19.8	19.6	19.1	18.6	18.2	17.7	17.2	16.7	16.2	16
20	24.8	24.5	23.9	23.3	22.7	22.1	21.5	20.9	20.3	20
25	31.0	30.6	29.9	29.1	28.4	27.6	26.9	26.1	25.4	25
32	39.7	39.2	38.2	37.3	36.3	35.4	34.4	33.4	32.5	32
40	49.6	49.0	47.8	46.6	45.4	44.2	43.0	41.8	40.6	40
50	62.0	61.3	59.8	58.3	56.8	55.3	53.8	52.3	50.8	50
63	78.1	77.2	75.3	73.4	71.5	69.6	67.7	65.8	63.9	63

Tripping Characteristics

C Curve

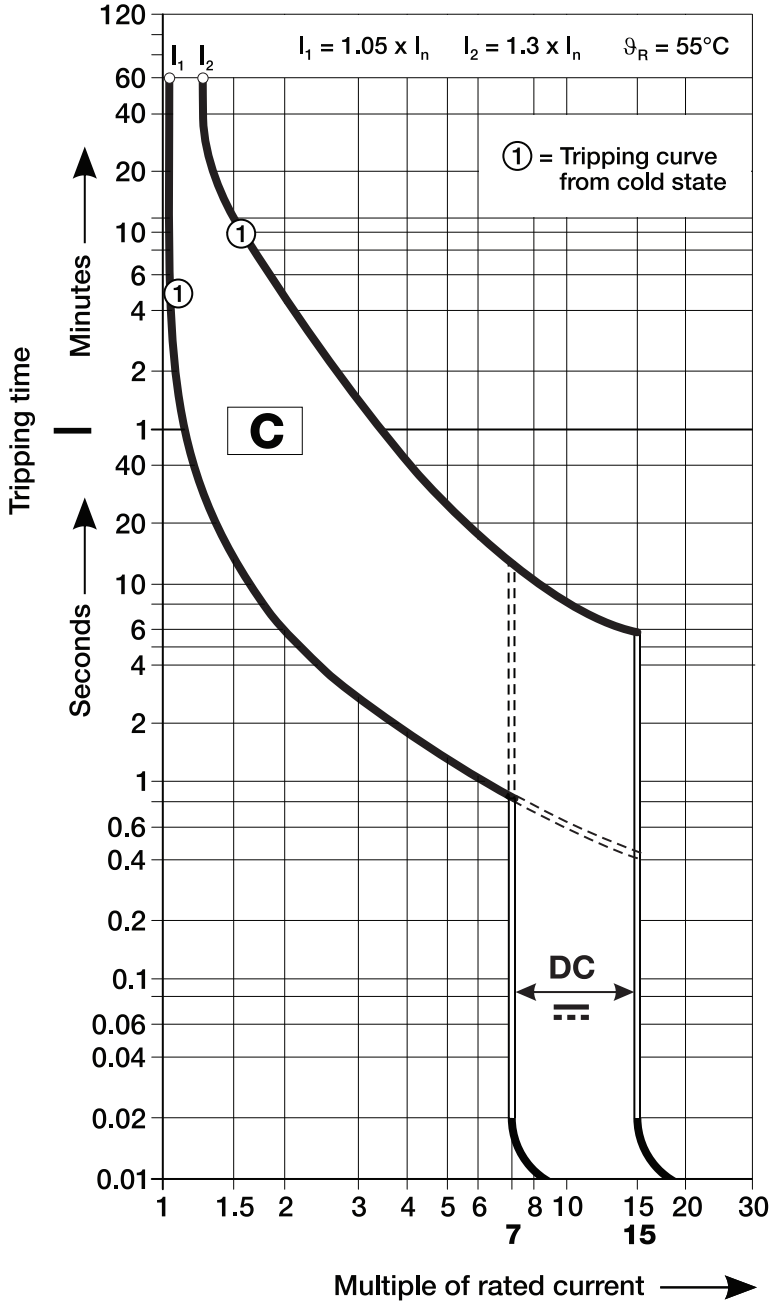

Accessories

Right Mount

Photo	Product Description ‡★Δ	Contacts	Standards	Certifications	UL/CSA Max. Current/Voltage	IEC Ratings Current/Voltage	Cat. No.
	Shunt Trip		UL 1077 CSA 22.2 No. 235	UL Recognized CSA Certified CE Marked	110...415V AC 110-250V DC	110...415V AC 110-250V DC	189-AST1
			UL 1077 CSA 22.2 No. 235	UL Recognized CSA Certified CE Marked	12...60V AC/DC	12...60V AC/DC	189-AST2
	Auxiliary/Signal Contact	1 N.O./N.C. (1 C.O.) 	UL 1077 CSA 22.2 No. 235 EN 60947-5-1 GB 14048.5	UL Recognized CSA Certified CE Marked VDE Certified CCC Certified	1A @ 480 VAC 2A @ 277 VAC 1.5A @ 125 VDC 2A @ 60 VDC 4A @ 24 VDC	2A @ 230 V (AC-14) 1A @ 400 V (AC-14) 1.5A @ 110 V (DC-12) 1A @ 220 V (DC-12) 4A @ 24 V (DC-13) 2A @ 60 V (DC-13)	189-ASCR3
	Auxiliary Contact	1 N.O./N.C. (1 C.O.) 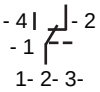	UL 1077 CSA 22.2 No. 235 EN 60947-5-1 GB 14048.5	UL Recognized CSA Certified CE Marked VDE Certified CCC Certified	1A @ 480 VAC 2A @ 277 VAC 1.5A @ 125 VDC 2A @ 60 VDC 4A @ 24 VDC	2A @ 230 V (AC-14) 1A @ 400 V (AC-14) 1.5A @ 110 V (DC-12) 1A @ 220 V (DC-12) 4A @ 24 V (DC-13) 2A @ 60 V (DC-13)	189-AR3
		1 N.O. + 1 N.C. 	UL 1077 CSA 22.2 No. 235 EN 60947-5-1 GB 14048.5	UL Recognized CSA Certified CE Marked VDE Certified CCC Certified	1A @ 400 VAC 2A @ 230 VAC 1A @ 50 VDC 2A @ 30V DC	2A @ 230 V (AC-14) 1A @ 400 V (AC-14) 2A @ 30V (DC-12) 1A @ 50 V (DC-12) 2A @ 30 V (DC-13) 1A @ 50 V (DC-13)	189-AR11
		2 N.C. 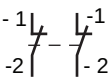	UL 1077 CSA 22.2 No. 235 EN 60947-5-1 GB 14048.5	UL Recognized CSA Certified CE Marked VDE Certified CCC Certified	1A @ 400 VAC 2A @ 230 VAC 1A @ 50 VDC 2A @ 30 VDC	2A @ 230 V (AC-14) 1A @ 400 V (AC-14) 2A @ 30V (DC-12) 1A @ 50 V (DC-12) 2A @ 30 V (DC-13) 1A @ 50 V (DC-13)	189-AR02
		2 N.O. 	UL 1077 CSA 22.2 No. 235 EN 60947-5-1 GB 14048.5	UL Recognized CSA Certified CE Marked VDE Certified CCC Certified	1A @ 400 VAC 2A @ 230 VAC 1A @ 50 VDC 2A @ 30 VDC	2A @ 230 V (AC-14) 1A @ 400 V (AC-14) 2A @ 30V (DC-12) 1A @ 50 V (DC-12) 2A @ 30 V (DC-13) 1A @ 50 V (DC-13)	189-AR20

‡ A maximum of one C.O. type signal contact, and two C.O. type auxiliary contacts ***OR*** three C.O. type auxiliary contacts may be installed with or without one shunt trip per 1492-D.

★ A maximum of two 189-AR11, -AR02, or -AR20 auxiliary contacts may be installed per 1492-D. They may not be combined with shunt trips or C.O. type contacts.

Δ A maximum of four right mount accessories of any type may be installed per 1492-D. The shunt trip must be mounted closest to 1492-D, then the signal contact, then the auxiliary contact(s). For allowed combinations, and installation instructions please contact your local Rockwell Automation sales office or Allen-Bradley distributor.

Left Mount

Photo	Product Description ★	Contacts	Standards	Certifications	UL/CSA Max. Current/Voltage	IEC Ratings Current/Voltage	Cat. No.
	Auxiliary Contact	1 N.O. + 1 N.C. 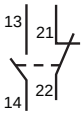	EN 60947-5-1	CE Marked	—	2A @ 230 V (AC-14) 1A @ 400 V (AC-14) 1.5A @ 110 V (DC-12) 1A @ 220 V (DC-12) 4A @ 24 V (DC-13) 2A @ 60 V (DC-13)	189-AL11
		2 N.C. 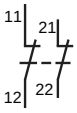	EN 60947-5-1	CE Marked	—	2A @ 230 V (AC-14) 1A @ 400 V (AC-14) 1.5A @ 110 V (DC-12) 1A @ 220 V (DC-12) 4A @ 24 V (DC-13) 2A @ 60 V (DC-13)	189-AL02
		2 N.O. 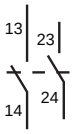	EN 60947-5-1	CE Marked	—	2A @ 230 V (AC-14) 1A @ 400 V (AC-14) 1.5A @ 110 V (DC-12) 1A @ 220 V (DC-12) 4A @ 24 V (DC-13) 2A @ 60 V (DC-13)	189-AL20

★ Only one left mount auxiliary contact may be installed per 1492-D.

Bottom Mount

Photo	Product Description Δ	Contacts	Standards	Certifications‡	UL/CSA Max. Current/Voltage	IEC Ratings Current/Voltage	Cat. No.
	Auxiliary Contact	1 N.C. 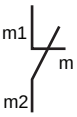	UL1077 CSA C22.2 No.235 EN 60947-5-1 GB 14048.5	UL Recognized CSA Certified CE Marked CCC Certified	2 A @ 230V AC 2 A @ 50V DC	2A @ 230 V (AC-14) 2A @ 30V (DC-12) 1A @ 50 V (DC-12) 2A @ 30 V (DC-13) 1A @ 50 V (DC-13)	189-AB01
		1 N.O. 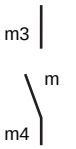	UL1077 CSA C22.2 No.235 EN 60947-5-1 GB 14048.5	UL Recognized CSA Certified CE Marked CCC Certified	2 A @ 230V AC 2 A @ 50V DC	2A @ 230 V (AC-14) 2A @ 30V (DC-12) 1A @ 50 V (DC-12) 2A @ 30 V (DC-13) 1A @ 50 V (DC-13)	189-AB10

Δ Only one bottom mount auxiliary contact may be installed per 1492-D.

‡ Bottom mount auxiliaries show a CE Mark on the product instruction sheet and packaging, but not on the product itself.

Toggle Mount

Photo	Product Description	Cat. No.
	Lock-out attachment for 1-pole MCB	189-ALOA1
	Lock-out attachment for multi-pole MCB	189-ALOA2

Circuit Breaker Accessory Approximate Dimensions

Note: Dimensions are shown in millimeters (inches). Dimensions are not intended for manufacturing purposes.

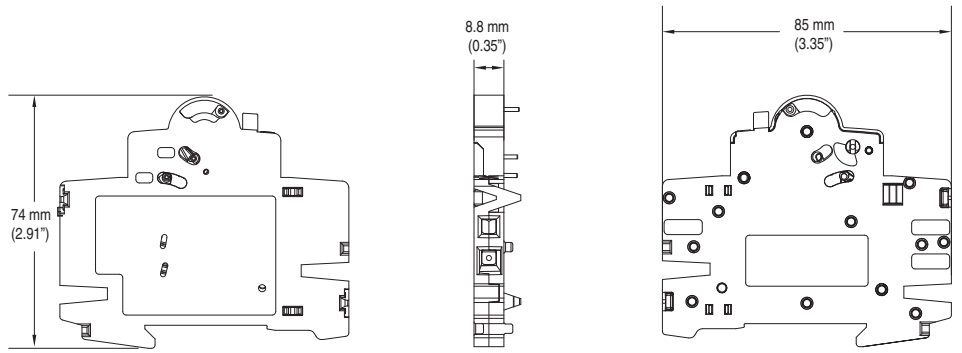

189-ASCR3

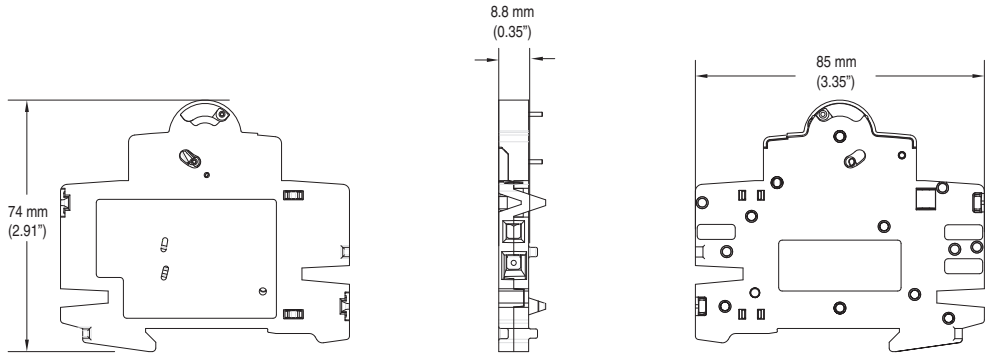

189-AR3

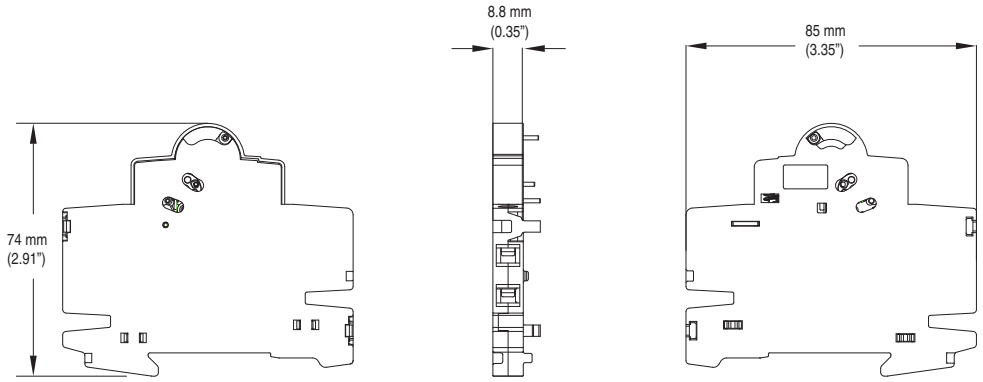

189-AR11, 189-AR02, 189-AR20

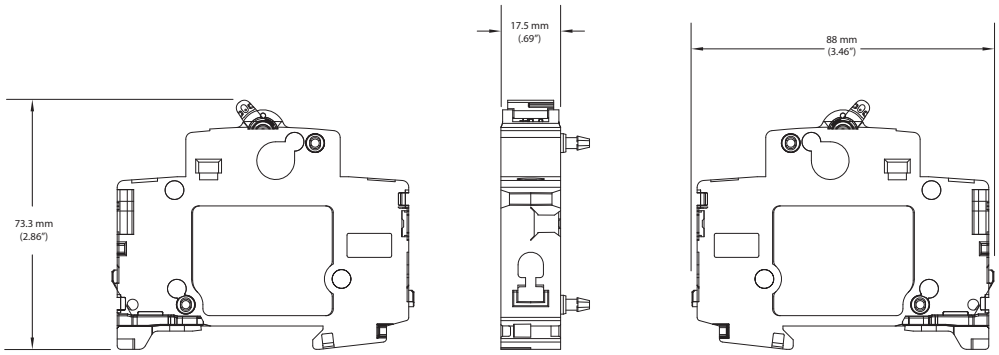

189-AST1 and 189-AST2

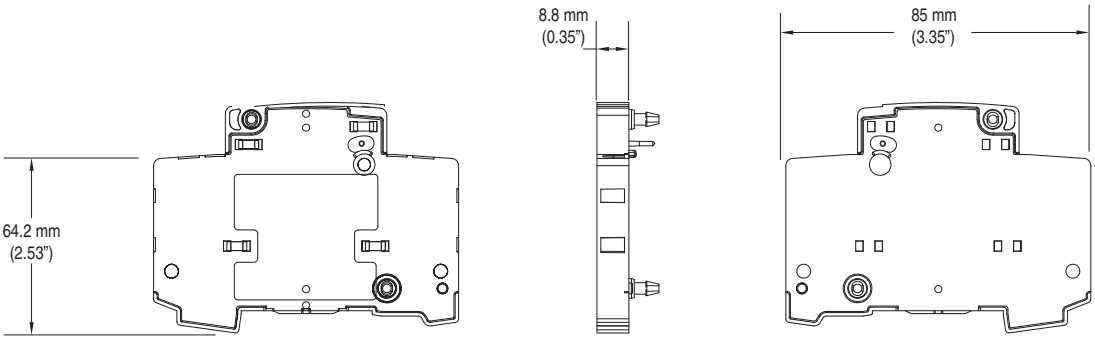

189-AL11, 189-AL02, and 189-AL20

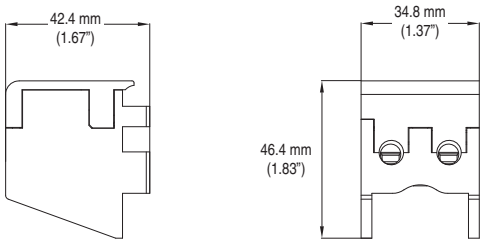

189-AB01 and 189-AB10

Bus Bars

1492-D Bus Bars

Description	Pins	Rated Current [A] ‡	Pkg. Qty.	Cat. No. ★
1-Phase	57	100 A	1	1492-A1B1
	57	80 A	1	1492-A1B8
1-Phase with aux. contact	37	100 A	1	1492-A1B1H
	37	80 A	1	1492-A1B8H
2-Phase	56	100 A	1	1492-A2B1
	56	80 A	1	1492-A2B8
2-Phase with aux. contact	46	100 A	1	1492-A2B1H
	46	80 A	1	1492-A2B8H

★ cULus, UL508, EN 60947-1, CE Marked

‡ Refer to the diagrams below for Feeder Terminal & Bus Bar Current Distribution

1492-D Bus Bar Accessories

Description	Pkg. Qty.	Cat. No. ★
Terminal Power Feed, 35 mm², straight lug	10	1492-AAT1S
Terminal Power Feed, 35 mm², offset lug, low profile	10	1492-AAT1LP
Dedicated Power Feed, 50 mm²	10	1492-AAT2
End Cover for 1-phase bus bar	10	1492-A1E
End Cover for 2- or 3-phase bus bar	10	1492-AME
Protective Shroud for unused pins	10	1492-AAP

★ cULus, UL508, EN 60947-1, CE Marked

Feeder Terminal & Bus Bar Current Distribution

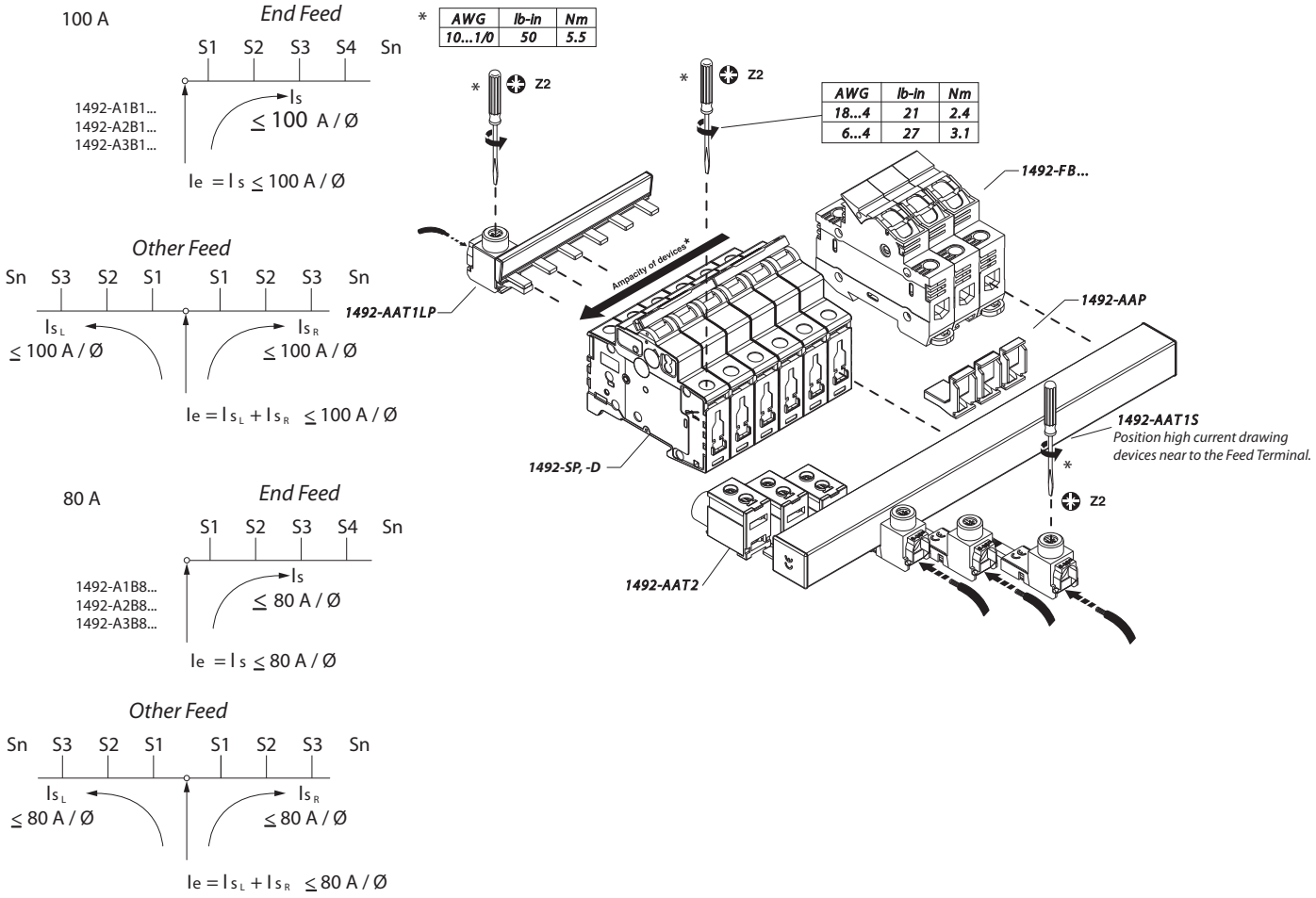

Bus Bar Approximate Dimensions

Note: Dimensions are shown in millimeters. Dimensions are not intended for manufacturing purposes.

1-Phase Bus Bars

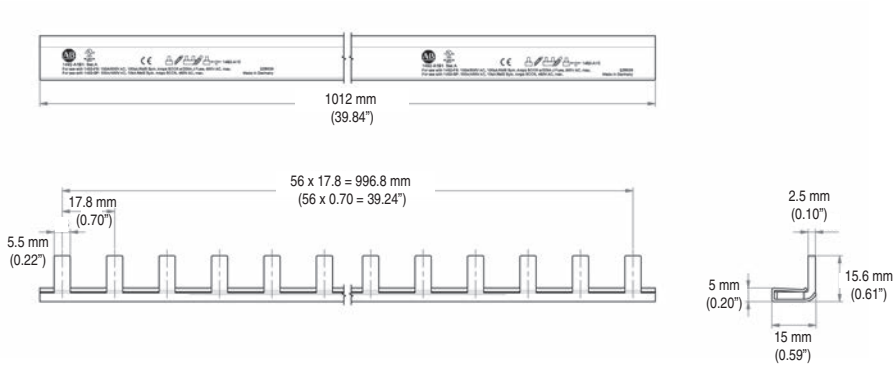

1492-A1B1

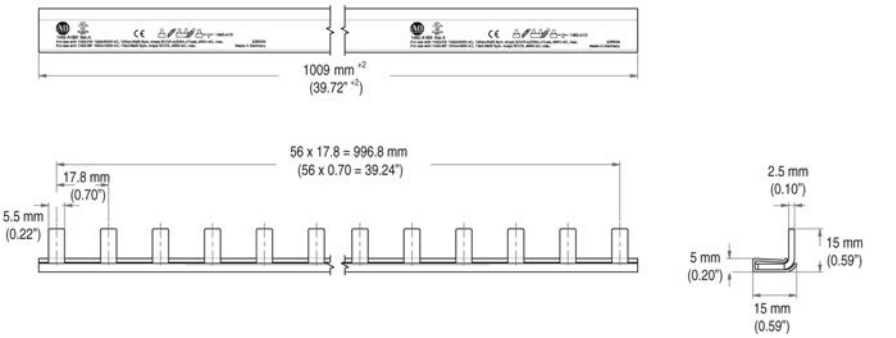

1492-A1B8

1-Phase Bus Bars, with Auxiliary Contact

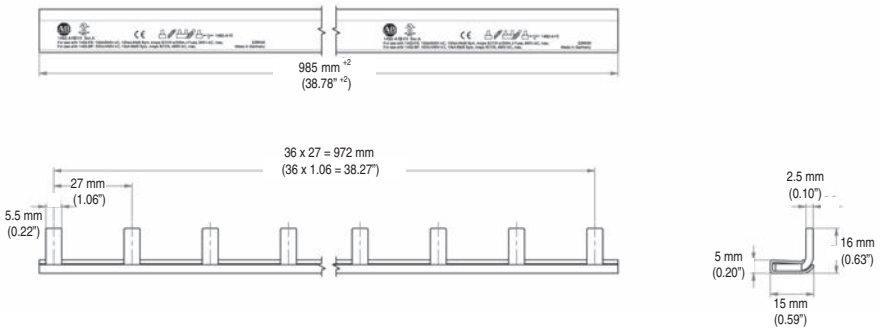

1492-A1B1H

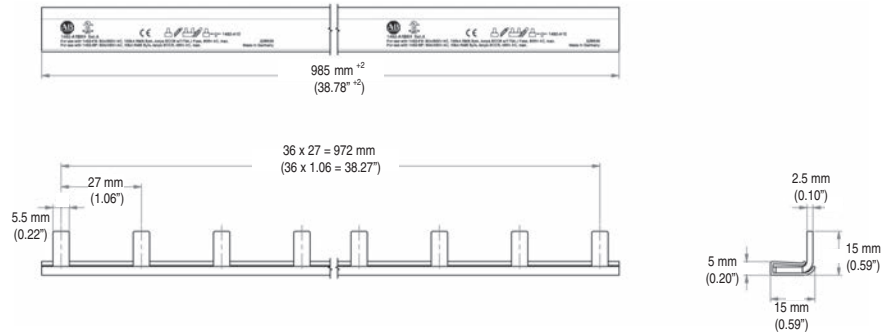

1492-A1B8H

2-Phase Bus Bars

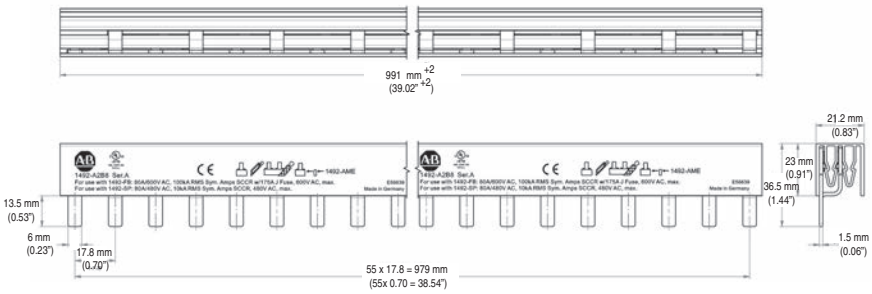

1492-A2B1

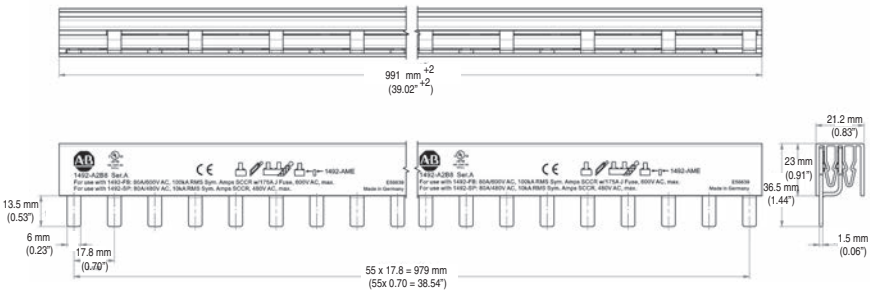

1492-A2B8

2-Phase Bus Bars, with Auxiliary Contact

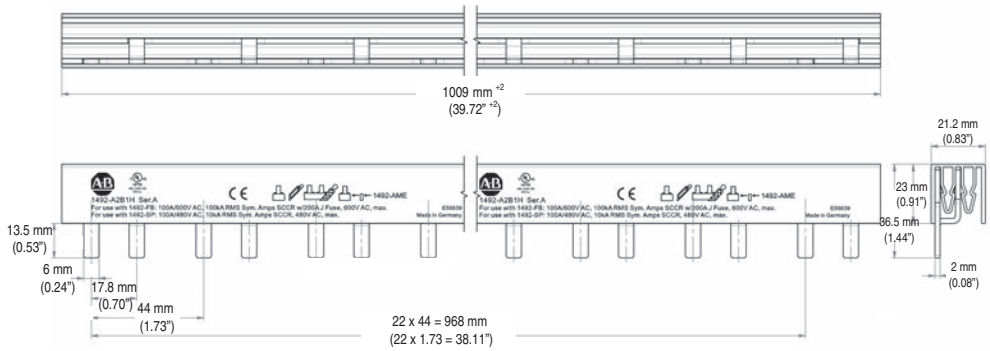

1492-A2B1H

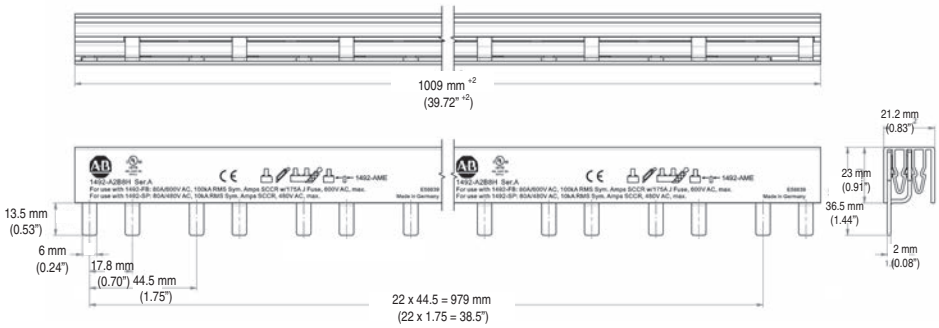

1492-A2B8H

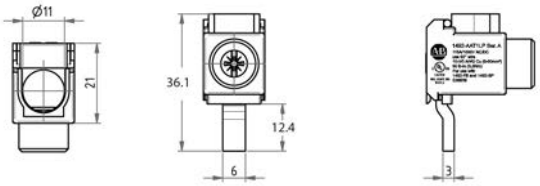

1492-AAT1LP

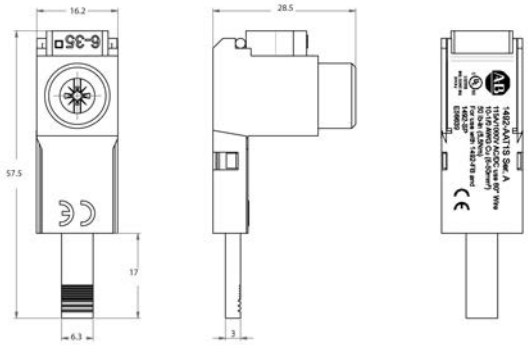

1492-AAT1S

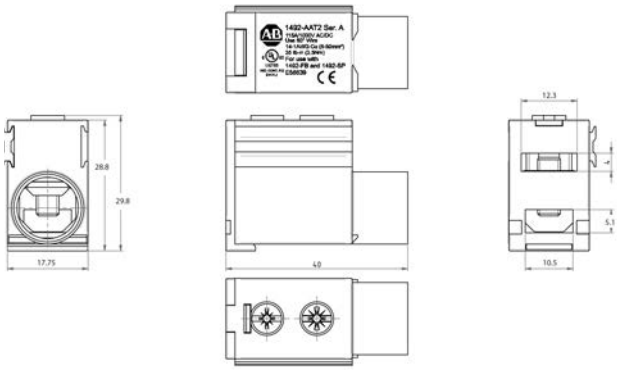

1492-AAT2

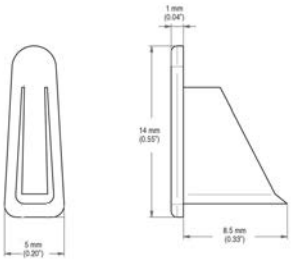

1492-A1E

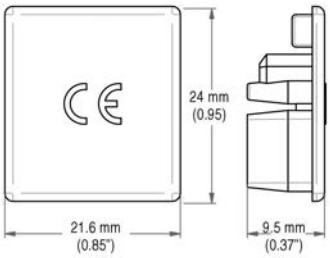

1492-AME

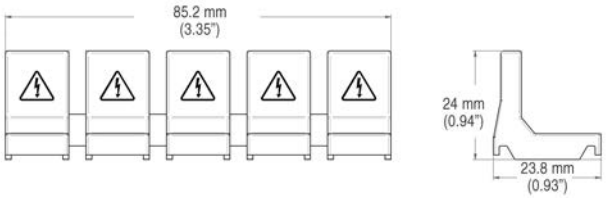

1492-AAP

188 Regional Circuit Breakers

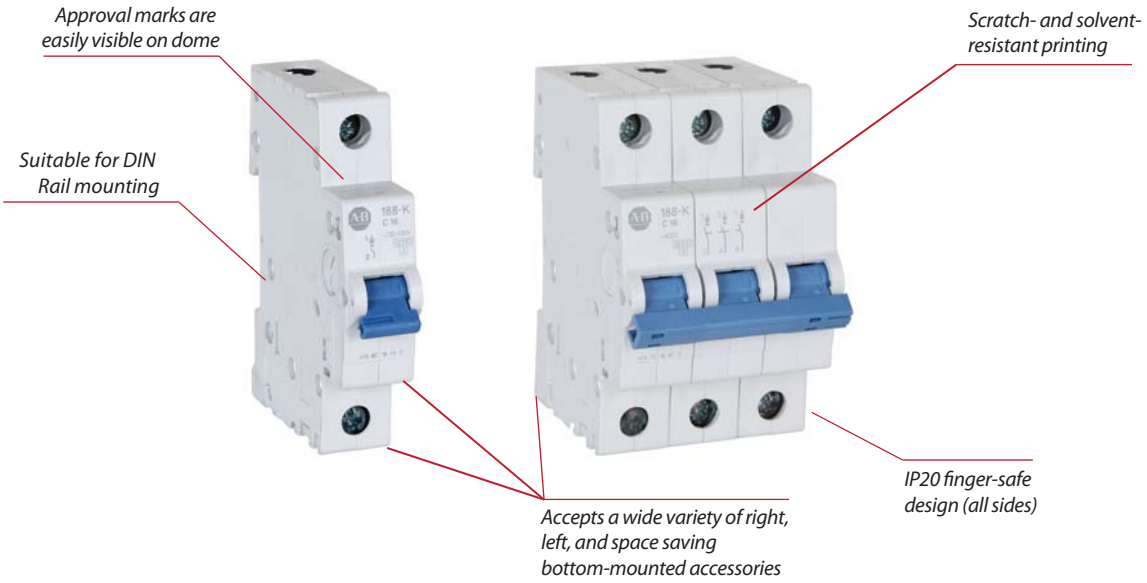

Bulletin 188 thermal magnetic Circuit Breakers are protective devices applied at the equipment level. They are offered as a broad portfolio of pole variants, current ratings and trip curves to match the appropriate level of protection for your application. They may be used with IEC rated bus bars for convenience in panel assembly. A wide range of left-, right- and space saving bottom-mount accessories (common to the Bulletin 1492-SP devices) are available.

Note: Bulletin 188 Regional Circuit Breakers have regional certifications only. They are available in China and Europe.

188 Regional Circuit Breakers	
Rated Voltage	IEC: U_e 230/400V AC
Interrupting Capacity	IEC: 6 kA, 10 kA
Current Ratings	0.5...63 A
Poles	1, 2, 3, 4, 1+N, 3+N
Trip Curves	B, C, D
Standards Compliance	EN 60898-1 GB 10963
Certifications	CE Marked CCC Certified VDE Certified RoHS Compliant

Features

- Current limiting
- Fast breaking time
- Broad portfolio of pole variants, current ratings and trip curves
- Available with 6 kA (188-K) and 10 kA (188-J) interrupting capacity
- Installation of up to six accessories on the same circuit breaker
- Existing installations can be easily upgraded to include an auxiliary using the bottom mounted auxiliary contact options
- Superior shock and vibration resistance to help prevent nuisance tripping
- Reversible line and load connections
- Single and multi-pole lock out attachments available for Lockout/Tagout (LOTO)
- RoHS compliant and fully recyclable device
- Suitable for extreme ambient conditions

Catalog Number Explanation

Note: Examples given in this section are for reference purposes. This basic explanation should not be used for product selection; some combinations may not produce a valid catalog number.

188	-	J	1	C	010	-	N
		a	*b*	*c*	*d*		*e*

a

Interrupt Rating	
Code	**Description**
J	Regional Circuit Breaker, 10 kA
K	Regional Circuit Breaker, 6 kA

b

Poles	
Code	**Description**
1	1-Pole
2	2-Pole
3	3-Pole
4	4-Pole

c

Trip Curve	
Code	**Trip Curve**
B	Trip Curve B
C	Trip Curve C
D	Trip Curve D

d

Rated Current (I_n)	
Code	**Current [A]**
005	0.5
010	1
020	2
030	3
040	4
060	6
080	8
100	10
130	13
160	16
200	20
250	25
320	32
400	40
500	50
630	63

e

+ Neutral (for 1+N and 3+N configurations)	
Code	**Description**
	Can be left blank
N	+ Neutral

Product Selection

1-Pole Regional Circuit Breakers

Photo/Wiring Diagram	Continuous Current Rating (I_n) [A]	10 kA Interrupting Capacity			6 kA Interrupting Capacity		
		Trip Curve B Resistive or Slightly Inductive 3…5 I_n Cat. No.	Trip Curve C Inductive 5…10 I_n Cat. No.	Trip Curve D Highly Inductive 10…20 I_n Cat. No.	Trip Curve B Resistive or Slightly Inductive 3…5 I_n Cat. No.	Trip Curve C Inductive 5…10 I_n Cat. No.	Trip Curve D Highly Inductive 10…20 I_n Cat. No.
1-pole	0.5	—	188-J1C005	188-J1D005	—	188-K1C005	188-K1D005
	1	—	188-J1C010	188-J1D010	—	188-K1C010	188-K1D010
	2	—	188-J1C020	188-J1D020	—	188-K1C020	188-K1D020
	3	—	188-J1C030	188-J1D030	—	188-K1C030	188-K1D030
	4	—	188-J1C040	188-J1D040	—	188-K1C040	188-K1D040
	6	188-J1B060	188-J1C060	188-J1D060	188-K1B060	188-K1C060	188-K1D060
	8	188-J1B080	188-J1C080	188-J1D080	188-K1B080	188-K1C080	188-K1D080
	10	188-J1B100	188-J1C100	188-J1D100	188-K1B100	188-K1C100	188-K1D100
	13	188-J1B130	188-J1C130	188-J1D130	188-K1B130	188-K1C130	188-K1D130
	16	188-J1B160	188-J1C160	188-J1D160	188-K1B160	188-K1C160	188-K1D160
	20	188-J1B200	188-J1C200	188-J1D200	188-K1B200	188-K1C200	188-K1D200
	25	188-J1B250	188-J1C250	188-J1D250	188-K1B250	188-K1C250	188-K1D250
	32	188-J1B320	188-J1C320	188-J1D320	188-K1B320	188-K1C320	188-K1D320
	40	188-J1B400	188-J1C400	188-J1D400	188-K1B400	188-K1C400	188-K1D400
	50	188-J1B500	188-J1C500	188-J1D500	188-K1B500	188-K1C500	188-K1D500
	63	188-J1B630	188-J1C630	188-J1D630	188-K1B630	188-K1C630	188-K1D630

1-Pole + Neutral Regional Circuit Breakers

Photo/Wiring Diagram	Continuous Current Rating (I_n) [A]	10 kA Interrupting Capacity			6 kA Interrupting Capacity		
		Trip Curve B Resistive or Slightly Inductive 3…5 I_n Cat. No.	Trip Curve C Inductive 5…10 I_n Cat. No.	Trip Curve D Highly Inductive 10…20 I_n Cat. No.	Trip Curve B Resistive or Slightly Inductive 3…5 I_n Cat. No.	Trip Curve C Inductive 5…10 I_n Cat. No.	Trip Curve D Highly Inductive 10…20 I_n Cat. No.
1-pole +N	0.5	—	188-J1C005-N	188-J1D005-N	—	188-K1C005-N	188-K1D005-N
	1	—	188-J1C010-N	188-J1D010-N	—	188-K1C010-N	188-K1D010-N
	2	—	188-J1C020-N	188-J1D020-N	—	188-K1C020-N	188-K1D020-N
	3	—	188-J1C030-N	188-J1D030-N	—	188-K1C030-N	188-K1D030-N
	4	—	188-J1C040-N	188-J1D040-N	—	188-K1C040-N	188-K1D040-N
	6	188-J1B060-N	188-J1C060-N	188-J1D060-N	188-K1B060-N	188-K1C060-N	188-K1D060-N
	8	188-J1B080-N	188-J1C080-N	188-J1D080-N	188-K1B080-N	188-K1C080-N	188-K1D080-N
	10	188-J1B100-N	188-J1C100-N	188-J1D100-N	188-K1B100-N	188-K1C100-N	188-K1D100-N
	13	188-J1B130-N	188-J1C130-N	188-J1D130-N	188-K1B130-N	188-K1C130-N	188-K1D130-N
	16	188-J1B160-N	188-J1C160-N	188-J1D160-N	188-K1B160-N	188-K1C160-N	188-K1D160-N
	20	188-J1B200-N	188-J1C200-N	188-J1D200-N	188-K1B200-N	188-K1C200-N	188-K1D200-N
	25	188-J1B250-N	188-J1C250-N	188-J1D250-N	188-K1B250-N	188-K1C250-N	188-K1D250-N
	32	188-J1B320-N	188-J1C320-N	188-J1D320-N	188-K1B320-N	188-K1C320-N	188-K1D320-N
	40	188-J1B400-N	188-J1C400-N	188-J1D400-N	188-K1B400-N	188-K1C400-N	188-K1D400-N
	50	188-J1B500-N	188-J1C500-N	188-J1D500-N	188-K1B500-N	188-K1C500-N	188-K1D500-N
	63	188-J1B630-N	188-J1C630-N	188-J1D630-N	188-K1B630-N	188-K1C630-N	188-K1D630-N

Product Selection

2-Pole Regional Circuit Breakers

Photo/Wiring Diagram	Continuous Current Rating (I_n) [A]	10 kA Interrupting Capacity			6 kA Interrupting Capacity		
		Trip Curve B Resistive or Slightly Inductive 3…5 I_n Cat. No.	Trip Curve C Inductive 5…10 I_n Cat. No.	Trip Curve D Highly Inductive 10…20 I_n Cat. No.	Trip Curve B Resistive or Slightly Inductive 3…5 I_n Cat. No.	Trip Curve C Inductive 5…10 I_n Cat. No.	Trip Curve D Highly Inductive 10…20 I_n Cat. No.
	0.5	—	188-J2C005	188-J2D005	—	188-K2C005	188-K2D005
	1	—	188-J2C010	188-J2D010	—	188-K2C010	188-K2D010
	2	—	188-J2C020	188-J2D020	—	188-K2C020	188-K2D020
	3	—	188-J2C030	188-J2D030	—	188-K2C030	188-K2D030
	4	—	188-J2C040	188-J2D040	—	188-K2C040	188-K2D040
	6	188-J2B060	188-J2C060	188-J2D060	188-K2B060	188-K2C060	188-K2D060
	8	188-J2B080	188-J2C080	188-J2D080	188-K2B080	188-K2C080	188-K2D080
	10	188-J2B100	188-J2C100	188-J2D100	188-K2B100	188-K2C100	188-K2D100
	13	188-J2B130	188-J2C130	188-J2D130	188-K2B130	188-K2C130	188-K2D130
	16	188-J2B160	188-J2C160	188-J2D160	188-K2B160	188-K2C160	188-K2D160
	20	188-J2B200	188-J2C200	188-J2D200	188-K2B200	188-K2C200	188-K2D200
	25	188-J2B250	188-J2C250	188-J2D250	188-K2B250	188-K2C250	188-K2D250
	32	188-J2B320	188-J2C320	188-J2D320	188-K2B320	188-K2C320	188-K2D320
	40	188-J2B400	188-J2C400	188-J2D400	188-K2B400	188-K2C400	188-K2D400
2-pole	50	188-J2B500	188-J2C500	188-J2D500	188-K2B500	188-K2C500	188-K2D500
	63	188-J2B630	188-J2C630	188-J2D630	188-K2B630	188-K2C630	188-K2D630

3-Pole Regional Circuit Breakers

Photo/Wiring Diagram	Continuous Current Rating (I_n) [A]	10 kA Interrupting Capacity			6 kA Interrupting Capacity		
		Trip Curve B Resistive or Slightly Inductive 3…5 I_n Cat. No.	Trip Curve C Inductive 5…10 I_n Cat. No.	Trip Curve D Highly Inductive 10…20 I_n Cat. No.	Trip Curve B Resistive or Slightly Inductive 3…5 I_n Cat. No.	Trip Curve C Inductive 5…10 I_n Cat. No.	Trip Curve D Highly Inductive 10…20 I_n Cat. No.
	0.5	—	188-J3C005	188-J3D005	—	188-K3C005	188-K3D005
	1	—	188-J3C010	188-J3D010	—	188-K3C010	188-K3D010
	2	—	188-J3C020	188-J3D020	—	188-K3C020	188-K3D020
	3	—	188-J3C030	188-J3D030	—	188-K3C030	188-K3D030
	4	—	188-J3C040	188-J3D040	—	188-K3C040	188-K3D040
	6	188-J3B060	188-J3C060	188-J3D060	188-K3B060	188-K3C060	188-K3D060
	8	188-J3B080	188-J3C080	188-J3D080	188-K3B080	188-K3C080	188-K3D080
	10	188-J3B100	188-J3C100	188-J3D100	188-K3B100	188-K3C100	188-K3D100
	13	188-J3B130	188-J3C130	188-J3D130	188-K3B130	188-K3C130	188-K3D130
	16	188-J3B160	188-J3C160	188-J3D160	188-K3B160	188-K3C160	188-K3D160
	20	188-J3B200	188-J3C200	188-J3D200	188-K3B200	188-K3C200	188-K3D200
	25	188-J3B250	188-J3C250	188-J3D250	188-K3B250	188-K3C250	188-K3D250
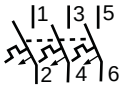	32	188-J3B320	188-J3C320	188-J3D320	188-K3B320	188-K3C320	188-K3D320
	40	188-J3B400	188-J3C400	188-J3D400	188-K3B400	188-K3C400	188-K3D400
3-pole	50	188-J3B500	188-J3C500	188-J3D500	188-K3B500	188-K3C500	188-K3D500
	63	188-J3B630	188-J3C630	188-J3D630	188-K3B630	188-K3C630	188-K3D630

Product Selection

3-Pole + N Regional Circuit Breakers

Photo/Wiring Diagram	Continuous Current Rating (I_n) [A]	10 kA Interrupting Capacity			6 kA Interrupting Capacity		
		Trip Curve B Resistive or Slightly Inductive 3…5 I_n Cat. No.	Trip Curve C Inductive 5…10 I_n Cat. No.	Trip Curve D Highly Inductive 10…20 I_n Cat. No.	Trip Curve B Resistive or Slightly Inductive 3…5 I_n Cat. No.	Trip Curve C Inductive 5…10 I_n Cat. No.	Trip Curve D Highly Inductive 10…20 I_n Cat. No.
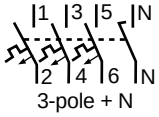 3-pole + N	0.5	—	188-J3C005-N	188-J3D005-N	—	188-K3C005-N	188-K3D005-N
	1	—	188-J3C010-N	188-J3D010-N	—	188-K3C010-N	188-K3D010-N
	2	—	188-J3C020-N	188-J3D020-N	—	188-K3C020-N	188-K3D020-N
	3	—	188-J3C030-N	188-J3D030-N	—	188-K3C030-N	188-K3D030-N
	4	—	188-J3C040-N	188-J3D040-N	—	188-K3C040-N	188-K3D040-N
	6	188-J3B060-N	188-J3C060-N	188-J3D060-N	188-K1D630-N	188-K3C060-N	188-K3D060-N
	8	188-J3B080-N	188-J3C080-N	188-J3D080-N	188-K3B060-N	188-K3C080-N	188-K3D080-N
	10	188-J3B100-N	188-J3C100-N	188-J3D100-N	188-K3B080-N	188-K3C100-N	188-K3D100-N
	13	188-J3B130-N	188-J3C130-N	188-J3D130-N	188-K3B100-N	188-K3C130-N	188-K3D130-N
	16	188-J3B160-N	188-J3C160-N	188-J3D160-N	188-K3B130-N	188-K3C160-N	188-K3D160-N
	20	188-J3B200-N	188-J3C200-N	188-J3D200-N	188-K3B160-N	188-K3C200-N	188-K3D200-N
	25	188-J3B250-N	188-J3C250-N	188-J3D250-N	188-K3B200-N	188-K3C250-N	188-K3D250-N
	32	188-J3B320-N	188-J3C320-N	188-J3D320-N	188-K3B250-N	188-K3C320-N	188-K3D320-N
	40	188-J3B400-N	188-J3C400-N	188-J3D400-N	188-K3B320-N	188-K3C400-N	188-K3D400-N
	50	188-J3B500-N	188-J3C500-N	188-J3D500-N	188-K3B400-N	188-K3C500-N	188-K3D500-N
	63	188-J3B630-N	188-J3C630-N	188-J3D630-N	188-K3B500-N	188-K3C630-N	188-K3D630-N

4-Pole Regional Circuit Breakers

Photo/Wiring Diagram	Continuous Current Rating (I_n) [A]	10 kA Interrupting Capacity			6 kA Interrupting Capacity		
		Trip Curve B Resistive or Slightly Inductive 3…5 I_n Cat. No.	Trip Curve C Inductive 5…10 I_n Cat. No.	Trip Curve D Highly Inductive 10…20 I_n Cat. No.	Trip Curve B Resistive or Slightly Inductive 3…5 I_n Cat. No.	Trip Curve C Inductive 5…10 I_n Cat. No.	Trip Curve D Highly Inductive 10…20 I_n Cat. No.
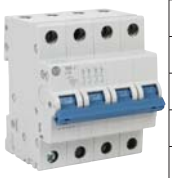 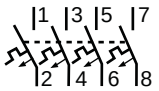 4-pole	0.5	—	188-J4C005	188-J4D005	—	188-K4C005	188-K4D005
	1	—	188-J4C010	188-J4D010	—	188-K4C010	188-K4D010
	2	—	188-J4C020	188-J4D020	—	188-K4C020	188-K4D020
	3	—	188-J4C030	188-J4D030	—	188-K4C030	188-K4D030
	4	—	188-J4C040	188-J4D040	—	188-K4C040	188-K4D040
	6	188-J4B060	188-J4C060	188-J4D060	188-K4B060	188-K4C060	188-K4D060
	8	188-J4B080	188-J4C080	188-J4D080	188-K4B080	188-K4C080	188-K4D080
	10	188-J4B100	188-J4C100	188-J4D100	188-K4B100	188-K4C100	188-K4D100
	13	188-J4B130	188-J4C130	188-J4D130	188-K4B130	188-K4C130	188-K4D130
	16	188-J4B160	188-J4C160	188-J4D160	188-K4B160	188-K4C160	188-K4D160
	20	188-J4B200	188-J4C200	188-J4D200	188-K4B200	188-K4C200	188-K4D200
	25	188-J4B250	188-J4C250	188-J4D250	188-K4B250	188-K4C250	188-K4D250
	32	188-J4B320	188-J4C320	188-J4D320	188-K4B320	188-K4C320	188-K4D320
	40	188-J4B400	188-J4C400	188-J4D400	188-K4B400	188-K4C400	188-K4D400
	50	188-J4B500	188-J4C500	188-J4D500	188-K4B500	188-K4C500	188-K4D500
	63	188-J4B630	188-J4C630	188-J4D630	188-K4B630	188-K4C630	188-K4D630

Specifications

General Data			
Poles			1, 2, 3, 4, 1+N, 3+N
Tripping characteristics			B, C, D
Rated current (I_n)			0.5 . . .63 A
Rated frequency (f)			50/60 Hz
Rated insulation voltage U_i per IEC/EN 60664-1			250 V AC (phase to ground), 440V AC (phase to phase)
Overvoltage category			III
Pollution degree			2
Data per IEC/EN 60898-1			
Rated operational voltage (U_e)	1-pole		230/400V AC
	1-pole +N		230V AC
	2-, 3-, 4-pole 3-pole +N		400V AC
Highest supply or utilization voltage (U_{max})	AC	1-pole	253/440V AC
		1-pole+N	253V AC
		2-, 3-, 4-, 3-pole+N	440V AC
	DC★	1-pole	48V DC
		2-pole	96V DC
Min. operating voltage			12V AC, 12V DC
Rated short-circuit capacity (I_{cn})		188-J	10 kA
		188-K	6 kA
Energy limiting class (B, C up to 40 A)			3
Rated impulse withstand voltage $U_{imp.}$ (1.2/50µs)			4 kV (test voltage 6.2kV at sea level, 5kV at 2,000m)
Dielectric test voltage			2 kV (50 / 60Hz, 1 min.)
Reference temperature for tripping characteristics			B, C, D: 30°C
Electrical endurance 1 cycle (2s - ON, 13s - OFF, $I_n \leq 32A$), 1 cycle (2s - ON, 28s - OFF, $I_n > 32A$)			$I_n < 30A$: 20,000 ops (AC) $I_n \geq 30A$: 10,000 ops. (AC); 1,000 ops. (DC);

★ IEC DC ratings self-declared.

Power Loss Due to Current

Rated Current [A]	Power Loss Per Pole [W]		Rated Current [A]	Power Loss Per Pole [W]
0.5	1.4		13	2.3
1	1.4		16	2.5
2	1.8		20	2.5
3	1.5		25	3.2
4	1.8		32	3.7
6	2.0		40	4.8
8	1.5		50	4.5
10	2.1		63	5.2

Mechanical Data	
Housing	Insulation group II, RAL 7035
Indicator window	None
Protection degree per EN 60529	IP20— IP40 in enclosure with cover
Mechanical endurance	20,000 operations
Shock resistance per IEC/EN 60068-2-27	25 g - 2 shocks - 13 ms
Vibration resistance per IEC/EN 60068-2-6	5g - 20 cycles at 5 . . . 150 . . . 5 Hz with load 0.8In
Environmental	
Environmental conditions (damp heat) per IEC/EN 60068-2-30	28 cycles with 55°C/90-96% and 25°C/95-100%
Ambient temperature★	-25 . . . +55°C
Storage temperature	-40 . . . +70°C
Installation	
Terminal	Cage terminal
Cross-section of wire solid, stranded	0.75...25 mm²
Cross-section of wire flexible	0.75...16 mm²
Tightening torque	2.0 N•m
Screwdriver	No. 2 Pozidrive
Mounting	DIN Rail (EN 60715, 35mm) with fast clip
Mounting position	Any
Supply	Optional
Approximate Dimensions and Weight	
Pole dimensions (H x D x W)	85 x 69 x 17.5 mm
Pole weight	115 g (4.4 oz.)
Combination with aux. elements	
Auxiliary contact	Yes
Signal contact	Yes
Shunt trip	Yes

★ Refer to the Ambient Temperature Derating tables.

Zero-stack Derating

The installation of several miniature circuit breaker side by side with rated current on all poles requires a correction factor to the rated current (not required if spacers are used).

No. of Adjacent Devices	Factor
1	1
2,3	0.9
4,5	0.8
≥6	0.75

Approximate Dimensions

Note: Dimensions are shown in millimeters (inches). Dimensions are not intended for manufacturing purposes.

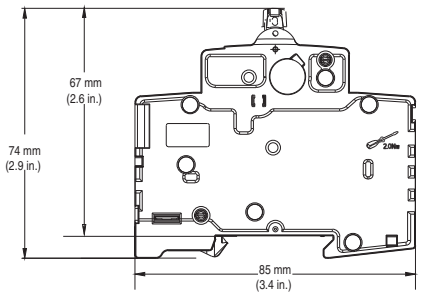

1-Pole

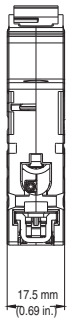

1-Pole

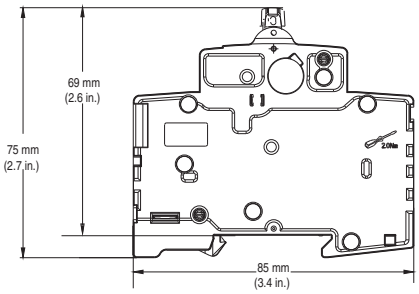

1+N, 2-, 3-,3+N, 4-Pole

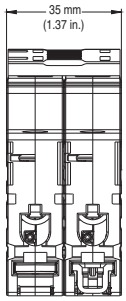

1-Pole +N, 2-Pole

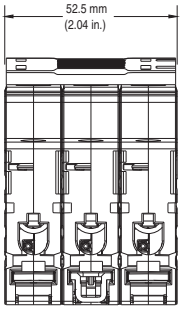

3-Pole

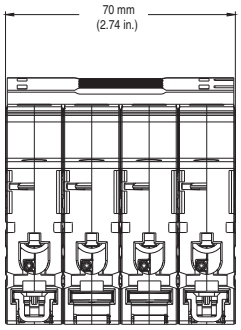

3-Pole +N, 4-Pole

Ambient Temperature Derating

Note: Application below 0º C is for non-condensing atmosphere. Care should be taken for applications below 0 °C. These devices are not certified to operate correctly in the presence of ice.

Bulletin 188-J, -K
Temperature Derating, IEC
Reference temperature = 30 °C

Current Rating	Ambient temperature (°C)									
(A)	-25	-20	-10	0	10	20	30	40	50	55
0.5	0.6	0.6	0.6	0.5	0.5	0.5	0.5	0.5	0.5	0.5
1	1.2	1.2	1.1	1.1	1.1	1.0	1.0	1.0	0.9	0.9
2	2.3	2.3	2.2	2.2	2.1	2.1	2.0	1.9	1.9	1.9
3	3.5	3.5	3.4	3.3	3.2	3.1	3.0	2.9	2.8	2.8
4	4.7	4.6	4.5	4.4	4.2	4.1	4.0	3.9	3.8	3.7
6	7.0	6.9	6.7	6.5	6.4	6.2	6.0	5.8	5.6	5.6
8	9.3	9.2	9.0	8.7	8.5	8.2	8.0	7.8	7.5	7.4
10	11.7	11.5	11.2	10.9	10.6	10.3	10	9.7	9.4	9.3
13	15.1	15.0	14.6	14.2	13.8	13.4	13	12.6	12.2	12.0
16	18.6	18.4	17.9	17.4	17.0	16.5	16	15.5	15.0	14.8
20	23.3	23.0	22.4	21.8	21.2	20.6	20	19.4	18.8	18.5
25	29.1	28.8	28.0	27.3	26.5	25.8	25	24.3	23.5	23.1
32	37.3	36.8	35.8	34.9	33.9	33.0	32	31.0	30.1	29.6
40	46.6	46.0	44.8	43.6	42.4	41.2	40	38.8	37.6	37.0
50	58.3	57.5	56.0	54.5	53.0	51.5	50	48.5	47.0	46.3
63	73.4	72.5	70.6	68.7	66.8	64.9	63	61.1	59.2	58.3

Tripping Characteristics*

B Curve

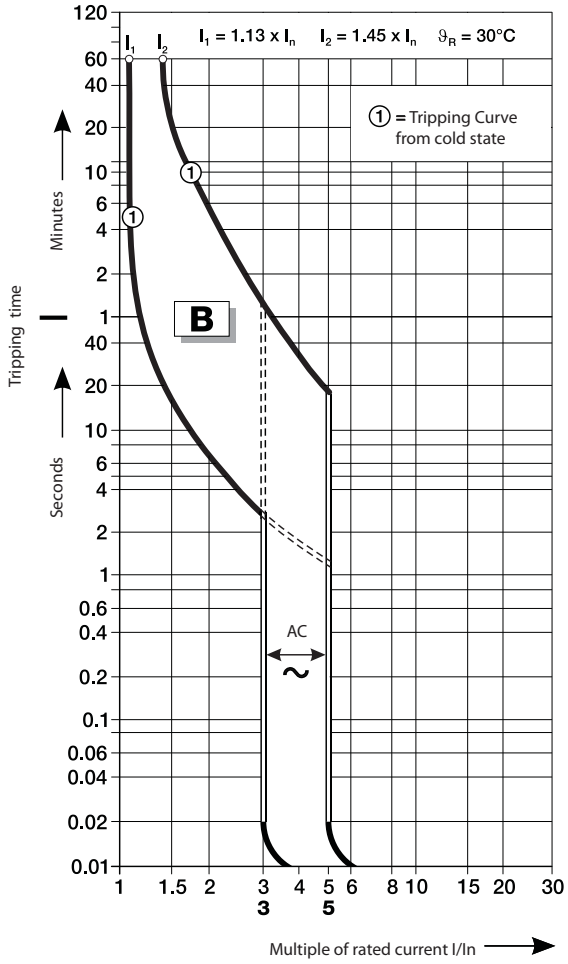

* DC trip curves:
When using 188-J/-K.. on DC applications or DC loads, please refer to AC trip curves and times and use a factor of 1.5 for the magnetic instantaneous trip times the continuous current rating (In).
For B trip curve = 4.5 to 7.5 multiple of the rated current (I/ In).
The thermal trip times remain the same for both AC and DC applications.

B and C Curve - 230/400V AC Let -through Energy

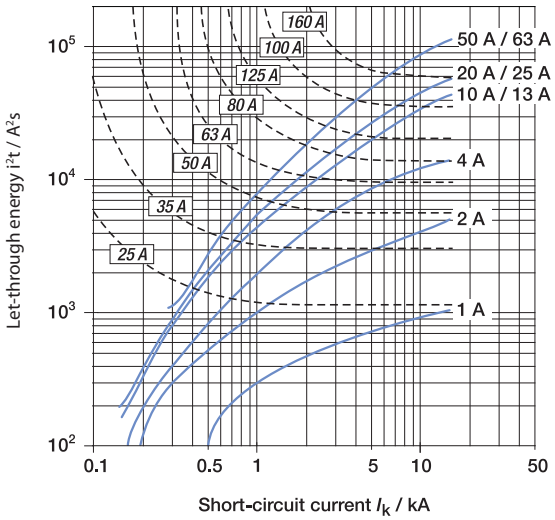

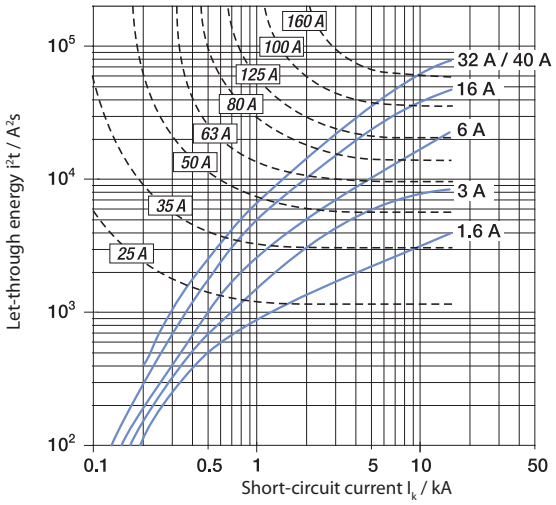

Tripping Characteristics*

C Curve

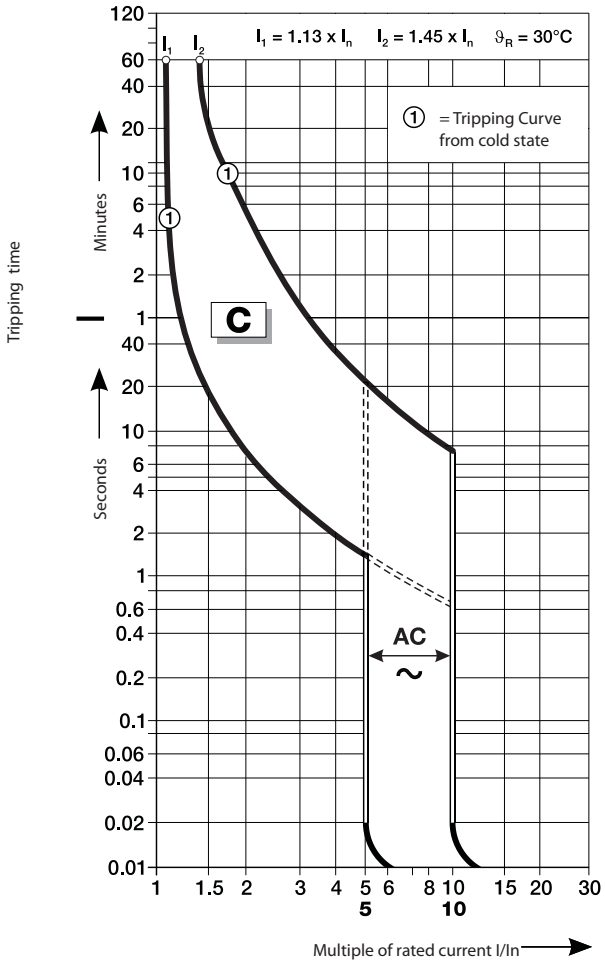

* DC trip curves:
When using 188-J/-K.. on DC applications or DC loads, please refer to AC trip curves and times and use a factor of 1.5 for the magnetic instantaneous trip times the continuous current rating (In).
For C trip curve = 7.5 to 15 multiple of the rated current (I/ In).
The thermal trip times remain the same for both AC and DC applications.

B and C Curve - 230/400V AC Let-through Energy

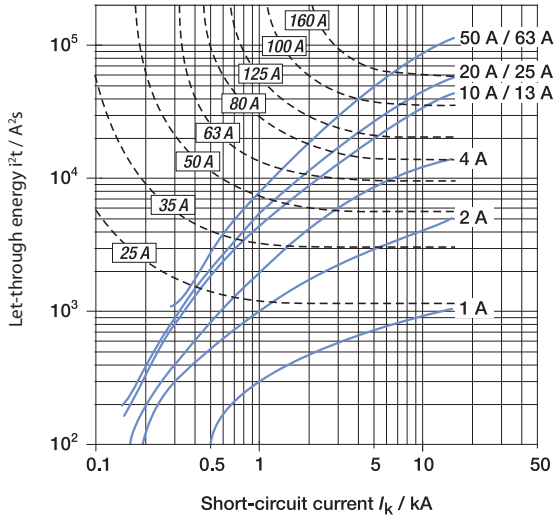

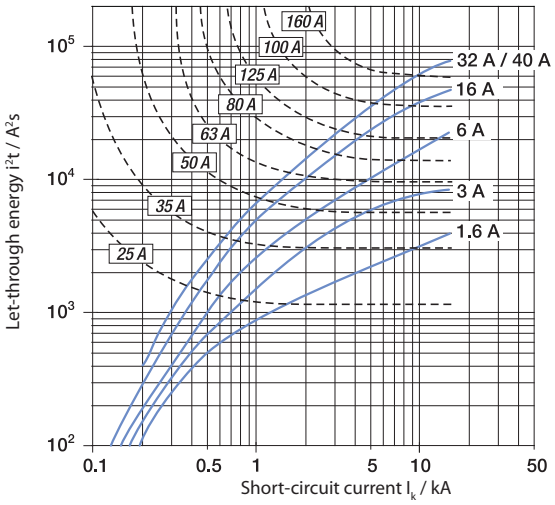

Tripping Characteristics*

D Curve

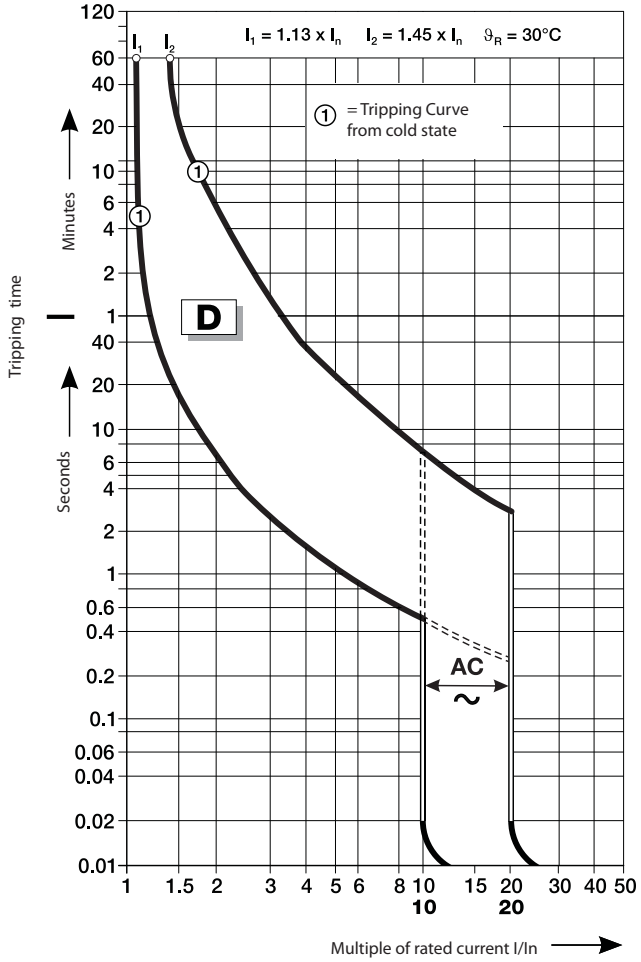

* DC trip curves:
When using 188-J/-K.. on DC applications or DC loads, please refer to AC trip curves and times and use a factor of 1.5 for the magnetic instantaneous trip times the continuous current rating (In).
For D trip curve = 15 to 30 multiple of the rated current (I/ In).
The thermal trip times remain the same for both AC and DC applications.

D Curve - 230/400V AC Let-through Energy

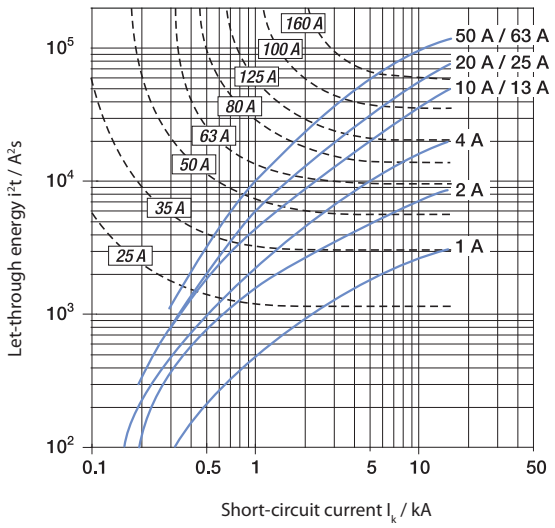

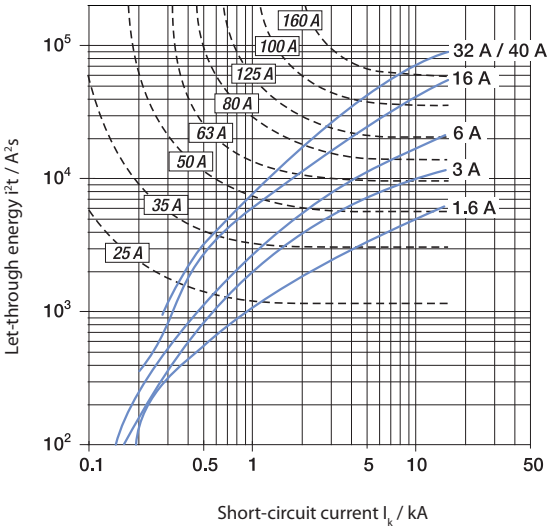

Accessories

Right Mount

Photo	Product Description ‡★Δ	Contacts	Standards	Certifications	UL/CSA Max. Current/Voltage	IEC Ratings Current/Voltage	Cat. No.
	Shunt Trip		UL 1077 CSA 22.2 No. 235	UL Recognized CSA Certified CE Marked	110...415V AC 110-250V DC	110...415V AC 110-250V DC	189-AST1
			UL 1077 CSA 22.2 No. 235	UL Recognized CSA Certified CE Marked	12...60V AC/DC	12...60V AC/DC	189-AST2
	Auxiliary/Signal Contact	1 N.O./N.C. (1 C.O.) 	UL 1077 CSA 22.2 No. 235 EN 60947-5-1 GB 14048.5	UL Recognized CSA Certified CE Marked VDE Certified CCC Certified	1A @ 480 VAC 2A @ 277 VAC 1.5A @ 125 VDC 2A @ 60 VDC 4A @ 24 VDC	2A @ 230 V (AC-14) 1A @ 400 V (AC-14) 1.5A @ 110 V (DC-12) 1A @ 220 V (DC-12) 4A @ 24 V (DC-13) 2A @ 60 V (DC-13)	189-ASCR3
	Auxiliary Contact	1 N.O./N.C. (1 C.O.) 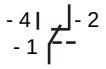	UL 1077 CSA 22.2 No. 235 EN 60947-5-1 GB 14048.5	UL Recognized CSA Certified CE Marked VDE Certified CCC Certified	1A @ 480 VAC 2A @ 277 VAC 1.5A @ 125 VDC 2A @ 60 VDC 4A @ 24 VDC	2A @ 230 V (AC-14) 1A @ 400 V (AC-14) 1.5A @ 110 V (DC-12) 1A @ 220 V (DC-12) 4A @ 24 V (DC-13) 2A @ 60 V (DC-13)	189-AR3
		1 N.O. + 1 N.C. 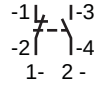	UL 1077 CSA 22.2 No. 235 EN 60947-5-1 GB 14048.5	UL Recognized CSA Certified CE Marked VDE Certified CCC Certified	1A @ 400 VAC 2A @ 230 VAC 1A @ 50 VDC 2A @ 30V DC	2A @ 230 V (AC-14) 1A @ 400 V (AC-14) 2A @ 30V (DC-12) 1A @ 50 V (DC-12) 2A @ 30 V (DC-13) 1A @ 50 V (DC-13)	189-AR11
		2 N.C 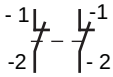	UL 1077 CSA 22.2 No. 235 EN 60947-5-1 GB 14048.5	UL Recognized CSA Certified CE Marked VDE Certified CCC Certified	1A @ 400 VAC 2A @ 230 VAC 1A @ 50 VDC 2A @ 30 VDC	2A @ 230 V (AC-14) 1A @ 400 V (AC-14) 2A @ 30V (DC-12) 1A @ 50 V (DC-12) 2A @ 30 V (DC-13) 1A @ 50 V (DC-13)	189-AR02
		2 N.O. 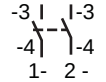	UL 1077 CSA 22.2 No. 235 EN 60947-5-1 GB 14048.5	UL Recognized CSA Certified CE Marked VDE Certified CCC Certified	1A @ 400 VAC 2A @ 230 VAC 1A @ 50 VDC 2A @ 30 VDC	2A @ 230 V (AC-14) 1A @ 400 V (AC-14) 2A @ 30V (DC-12) 1A @ 50 V (DC-12) 2A @ 30 V (DC-13) 1A @ 50 V (DC-13)	189-AR20

‡ A maximum of one C.O. type signal contact, and two C.O. type auxiliary contacts ***OR*** three C.O. type auxiliary contacts may be installed with or without a shunt trip per 188.

★ A maximum of two 189-AR11, -AR02, or -AR20 auxiliary contacts may be installed per 188. They may not be combined with shunt trips or C.O. type contacts.

Δ A maximum of four right mount accessories of any type may be installed per 188. The shunt trip must be mounted closest to the 188, then the signal contact, then the auxiliary contact(s). For allowed combinations, and installation instructions please contact your local Rockwell Automation sales office or Allen-Bradley distributor.

Accessories

Left Mount

Photo	Product Description ★	Contacts	Standards	Certifications	UL/CSA Max. Current/Voltage	IEC Ratings Current/Voltage	Cat. No.
	Auxiliary Contact	1 N.O. + 1 N.C. 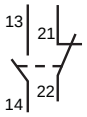	EN 60947-5-1	CE Marked	—	2A @ 230 V (AC-14) 1A @ 400 V (AC-14) 1.5A @ 110 V (DC-12) 1A @ 220 V (DC-12) 4A @ 24 V (DC-13) 2A @ 60 V (DC-13)	189-AL11
		2 N.C. 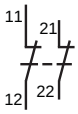	EN 60947-5-1	CE Marked	—	2A @ 230 V (AC-14) 1A @ 400 V (AC-14) 1.5A @ 110 V (DC-12) 1A @ 220 V (DC-12) 4A @ 24 V (DC-13) 2A @ 60 V (DC-13)	189-AL02
		2 N.O. 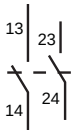	EN 60947-5-1	CE Marked	—	2A @ 230 V (AC-14) 1A @ 400 V (AC-14) 1.5A @ 110 V (DC-12) 1A @ 220 V (DC-12) 4A @ 24 V (DC-13) 2A @ 60 V (DC-13)	189-AL20

★ Only one left mount auxiliary contact may be installed per 188.

Bottom Mount

Photo	Product Description Δ‡	Contacts	Standards	Certifications‡	UL/CSA Max. Current/Voltage	IEC Ratings Current/Voltage	Cat. No.
	Auxiliary Contact	1 N.C. 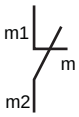	UL1077 CSA C22.2 No.235 EN 60947-5-1 GB 14048.5	UL Recognized CSA Certified CE Marked CCC Certified	2 A @ 230V AC 2 A @ 30V DC	2A @ 230 V (AC-14) 2A @ 30V (DC-12) 1A @ 50 V (DC-12) 2A @ 30 V (DC-13) 1A @ 50 V (DC-13)	189-AB01
		1 N.O. 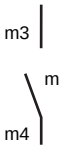	UL1077 CSA C22.2 No.235 EN 60947-5-1 GB 14048.5	UL Recognized CSA Certified CE Marked CCC Certified	2 A @ 230V AC 2 A @ 30V DC	2A @ 230 V (AC-14) 2A @ 30V (DC-12) 1A @ 50 V (DC-12) 2A @ 30 V (DC-13) 1A @ 50 V (DC-13)	189-AB10

Δ Only one bottom mount auxiliary contact may be installed per 188.

‡ Bottom mount auxiliaries show a CE Mark on the product instruction sheet and packaging, but not on the product itself.

Toggle Mount

Photo	Product Description	Cat. No.
	Lock Out attachment for 1-pole MCB	189-ALOA1
	Lock Out attachment for multi-pole MCB	189-ALOA2

Accessory Approximate Dimensions

Note: Dimensions are shown in millimeters (inches). Dimensions are not intended for manufacturing purposes.

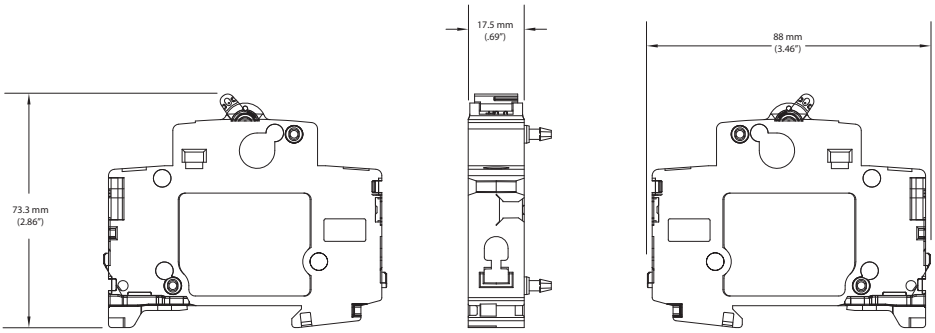

189-AST1 and 189-AST2

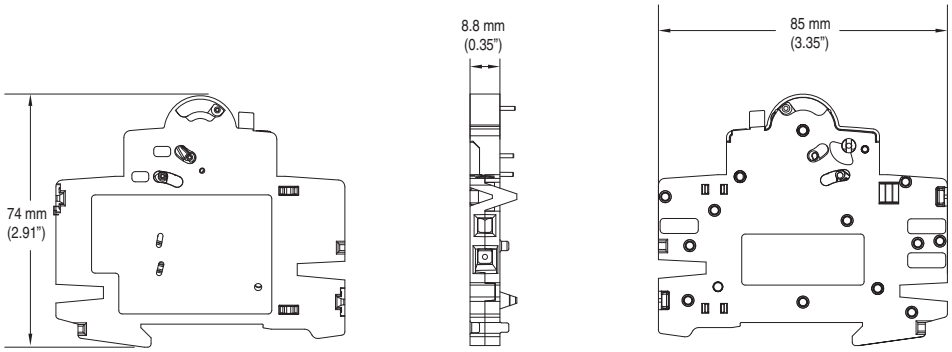

189-ASCR3

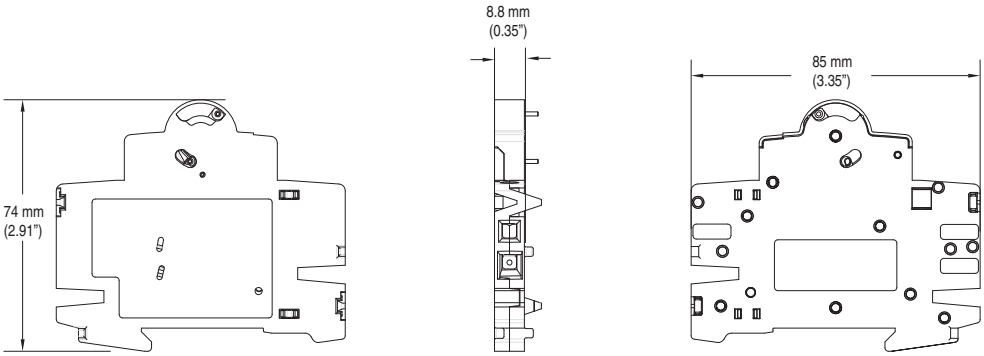

189-AR3

Accessory Approximate Dimensions

Note: Dimensions are shown in millimeters (inches). Dimensions are not intended for manufacturing purposes.

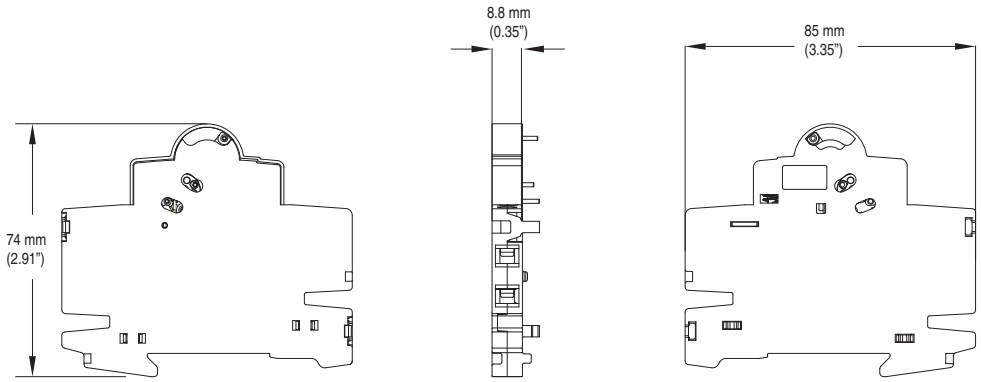

189-AR11, 189-AR02, 189-AR20

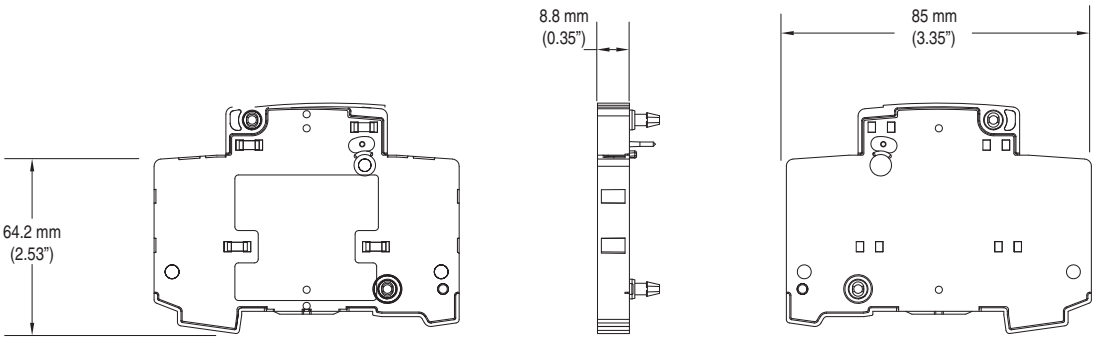

189-AL11, 189-AL02, and 189-AL20

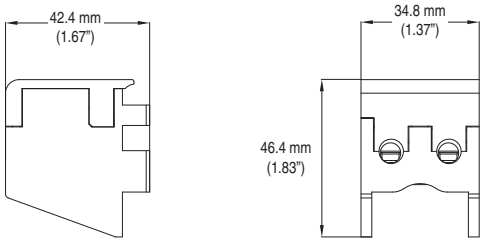

189-AB01 and 189-AB10

Bus Bars

188 Bus Bars

Description	Pins	Pkg. Qty.	Cat. No. ★
1-Phase	60	1	189-CL1
	12	20	189-CL112
	6	20	189-CL106
	2	20	189-CL102
1-Phase with aux contact	38	1	189-CL1H
	9	20	189-CL1H09
	6	20	189-CL1H06
	2	20	189-CL1H02
2-Phase	58	1	189-CL2
	12	10	189-CL212
	6	10	189-CL206
	4	10	189-CL204
2-Phase with aux contact	44	1	189-CL2H
	10	10	189-CL2H10
	6	10	189-CL2H06
	4	10	189-CL2H04
3-Phase	60	1	189-CL3
	12	10	189-CL312
	6	10	189-CL306
3-Phase with aux contact	48	1	189-CL3H
	12	10	189-CL3H12
	6	10	189-CL3H06
4-Phase	56	1	189-CL4
	8	10	189-CL408
4-Phase with aux contact	48	1	189-CL4H
2-Phase MCB to RCD	4	10	189-CL204
4-Phase MCB to RCD	8	10	189-CL408

★ These devices are CE Marked, but not certified to any UL, CSA, or other standard.

188 Bus Bar Accessories

Description	Pkg. Qty.	Cat. No. ★
Terminal Power Feed, 6...25 mm^2	10	189-CLT25
Terminal Power Feed, 6...50 mm^2	10	189-CLT50
Dedicated Power Feed, 50 mm^2	10	189-CLT50D
For 1-phase bus bar	10	189-CL1EC
For 2- or 3-phase bus bar	10	189-CL3EC
For 4-phase bus bar	10	189-CL4EC
Protective Shroud for unused pins	10	189-CLPS

★ These devices are CE Marked, but not certified to any UL, CSA, or other standard.

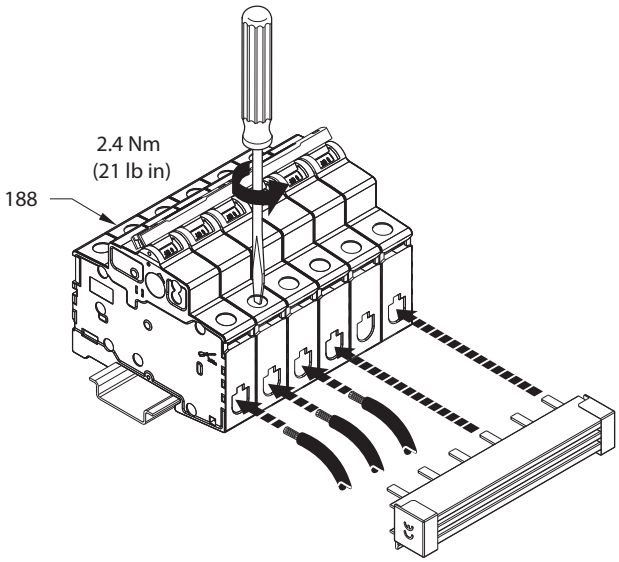

Bus Bar Approximate Dimensions

Note: Dimensions are shown in millimeters (inches). Dimensions are not intended for manufacturing purposes.

1-Phase Bus Bars

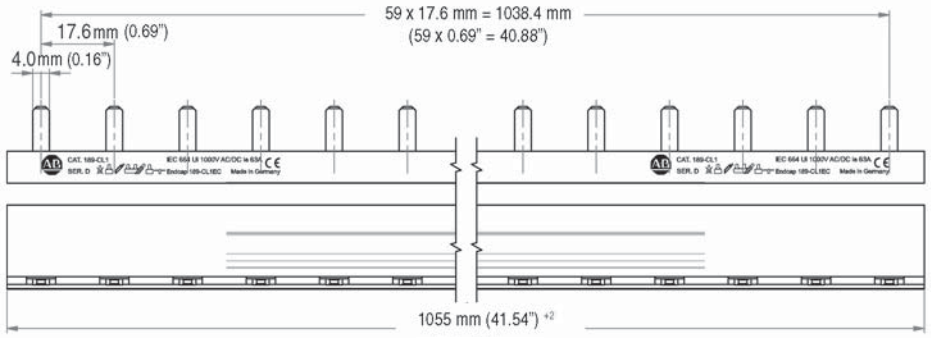

189-CL1

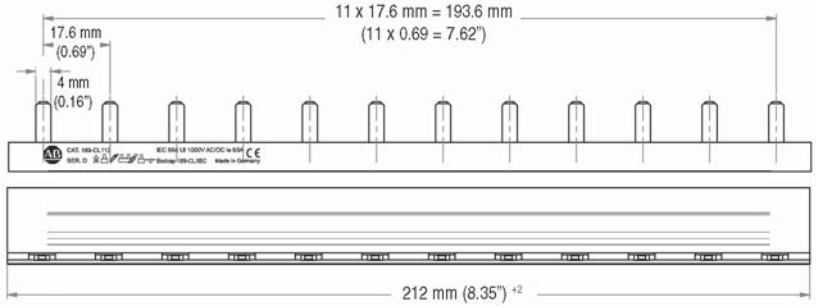

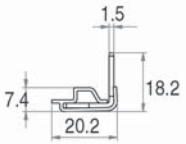

189-CL112

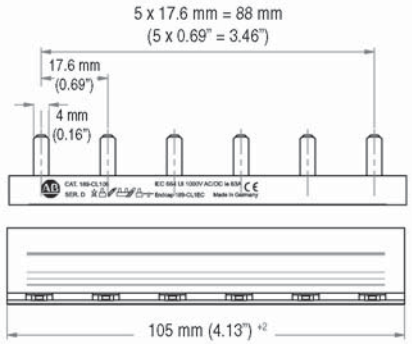

189-CL106

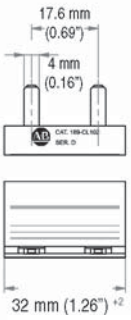

189-CL102

Bus Bar Approximate Dimensions

Note: Dimensions are shown in millimeters (inches). Dimensions are not intended for manufacturing purposes.

1-Phase Bus Bars, with Auxiliary Contact

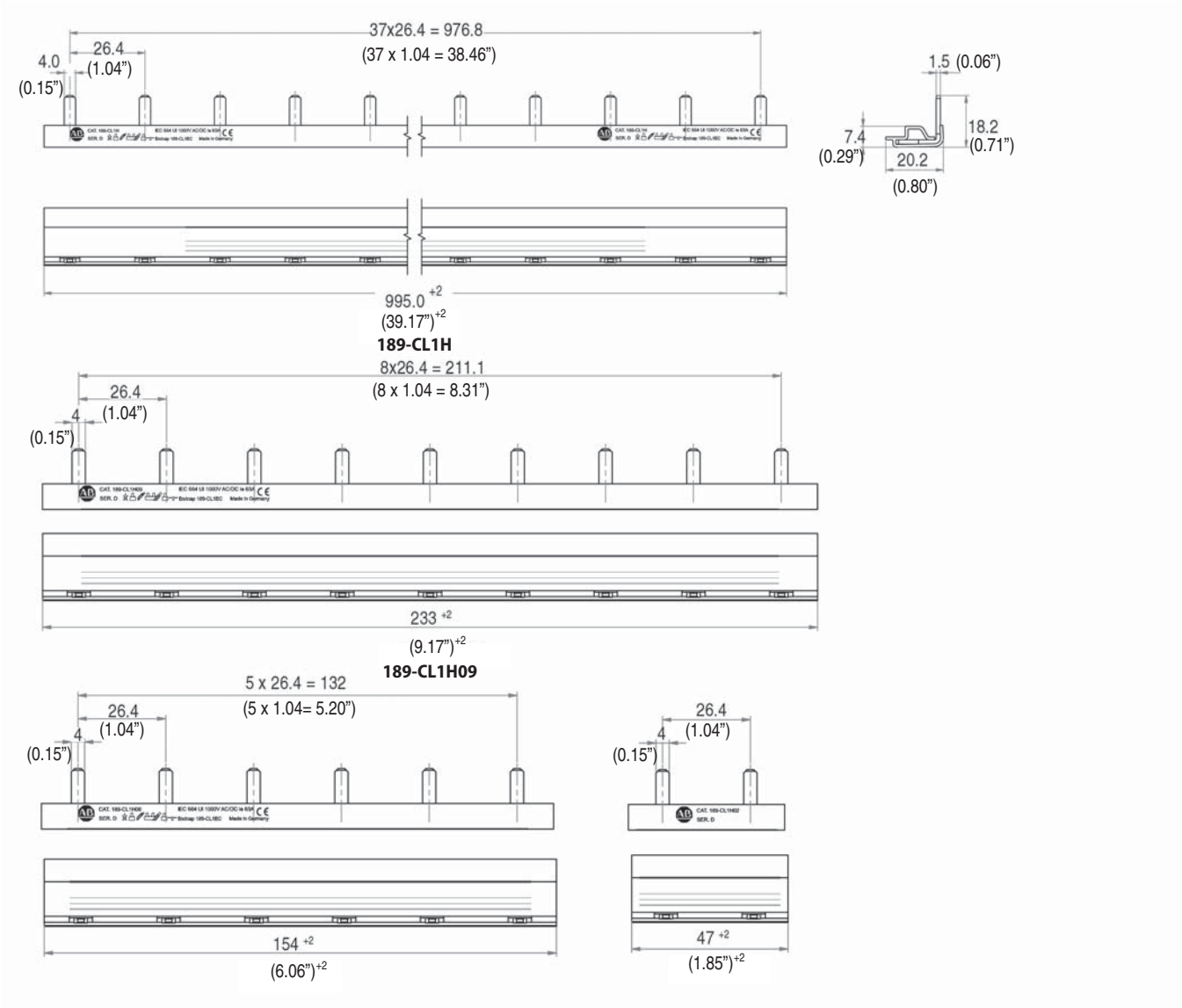

Bus Bar Approximate Dimensions

Note: Dimensions are shown in millimeters (inches). Dimensions are not intended for manufacturing purposes.

2-Phase Bus Bars

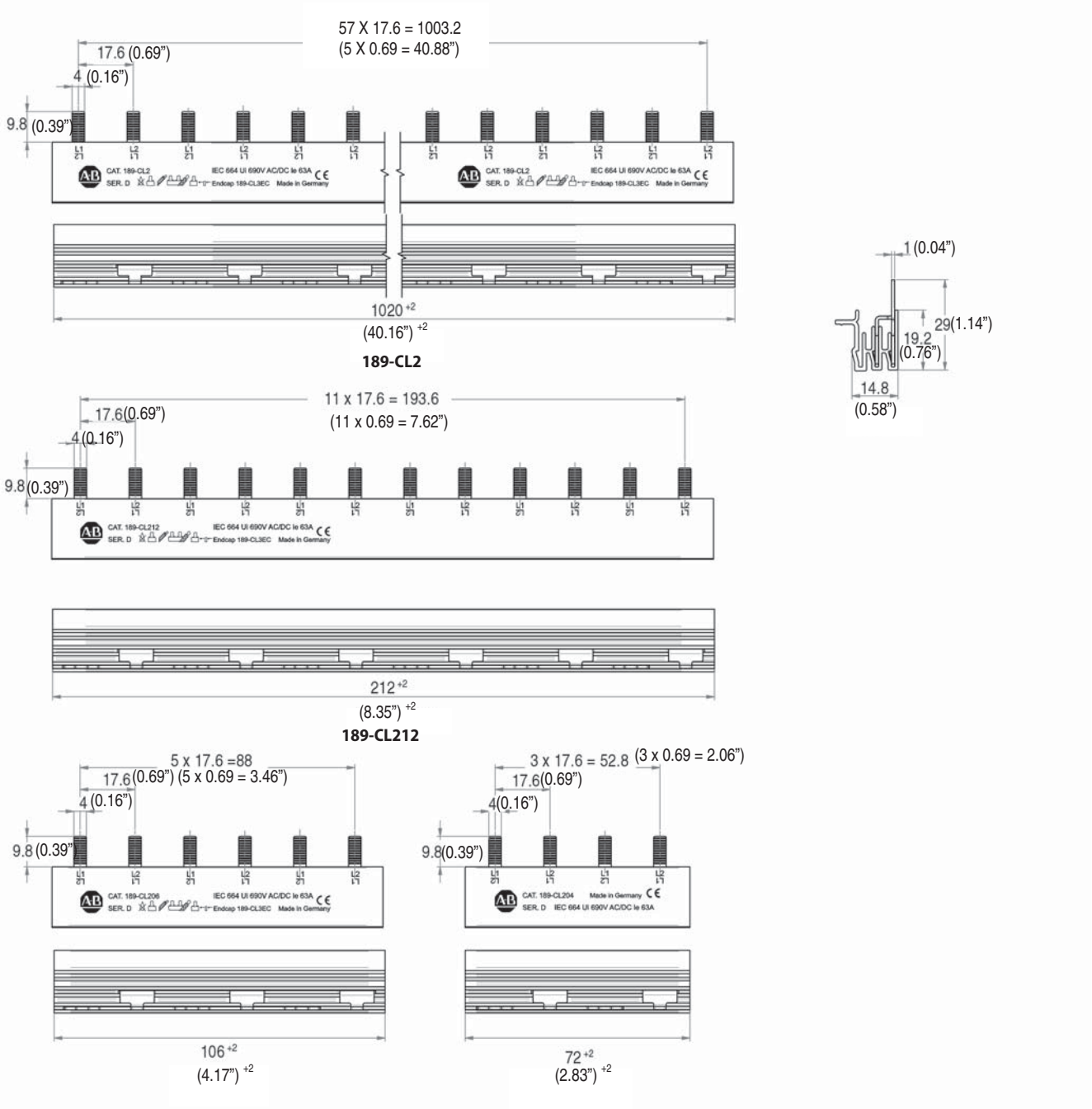

189-CL206 **189-CL204**

Bus Bar Approximate Dimensions

Note: Dimensions are shown in millimeters (inches). Dimensions are not intended for manufacturing purposes.

2-Phase Bus Bars, with Auxiliary Contact

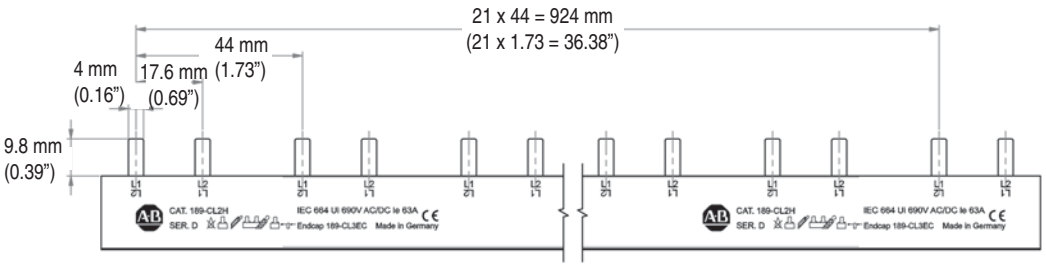

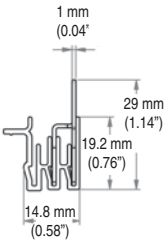

189-CL2H

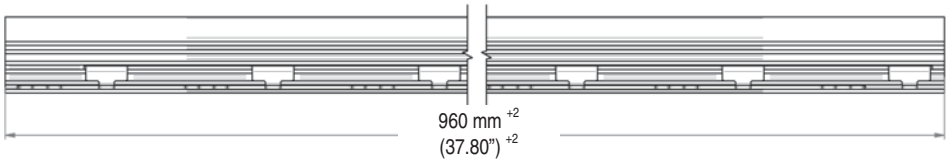

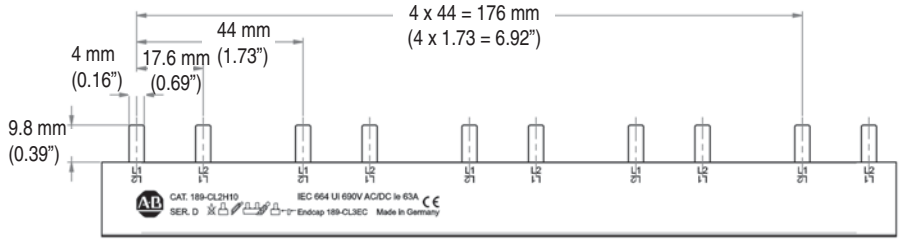

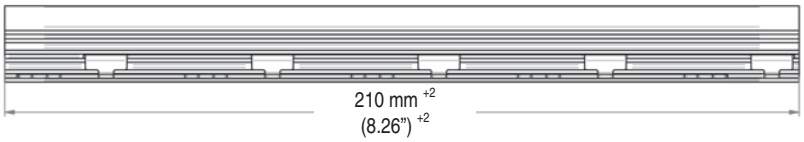

189-CL2H10

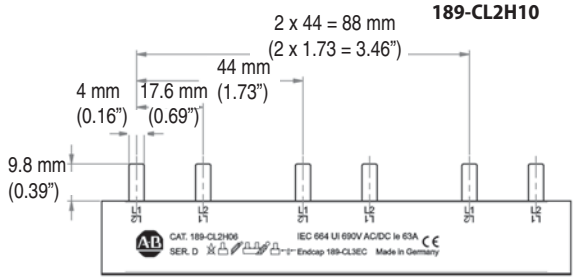

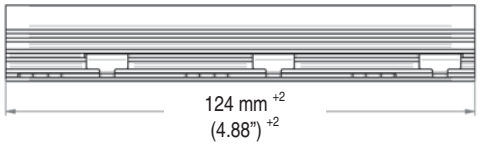

189-CL2H06

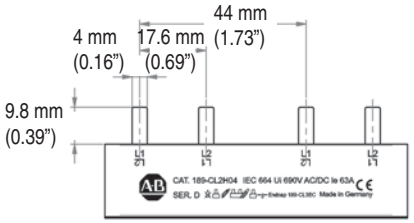

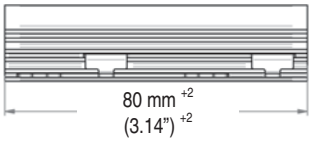

189-CL2H04

Bus Bar Approximate Dimensions

Note: Dimensions are shown in millimeters (inches). Dimensions are not intended for manufacturing purposes.

3-Phase Bus Bars

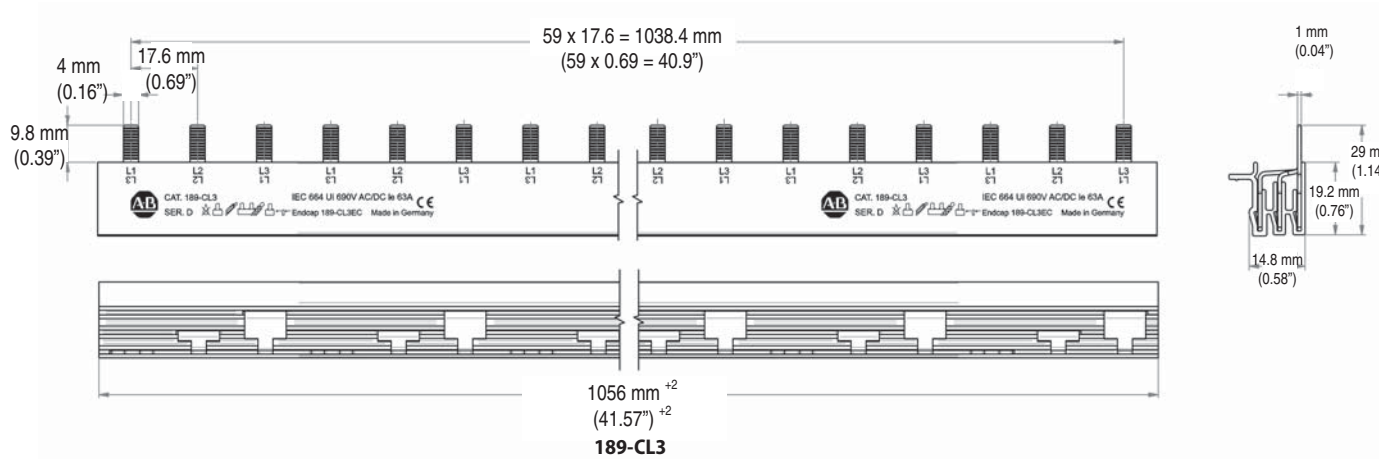

189-CL3

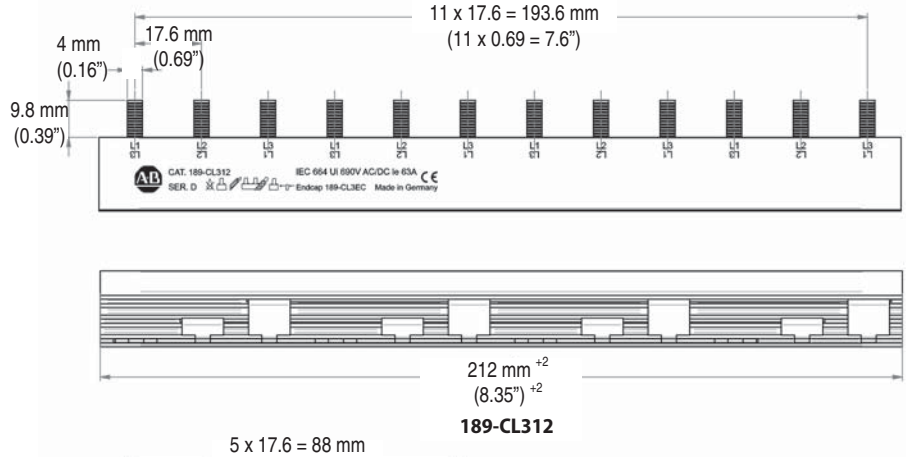

189-CL312

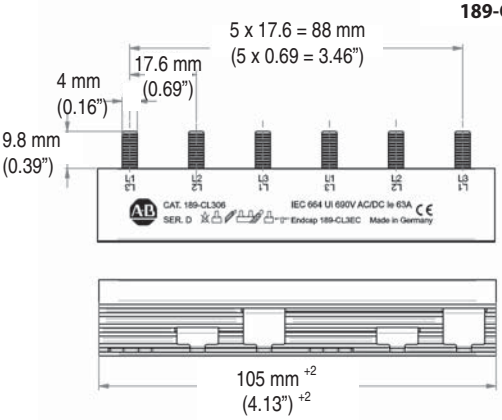

189-CL306

Bus Bar Approximate Dimensions

Note: Dimensions are shown in millimeters (inches). Dimensions are not intended for manufacturing purposes.

3-Phase Bus Bars, with Auxiliary Contact

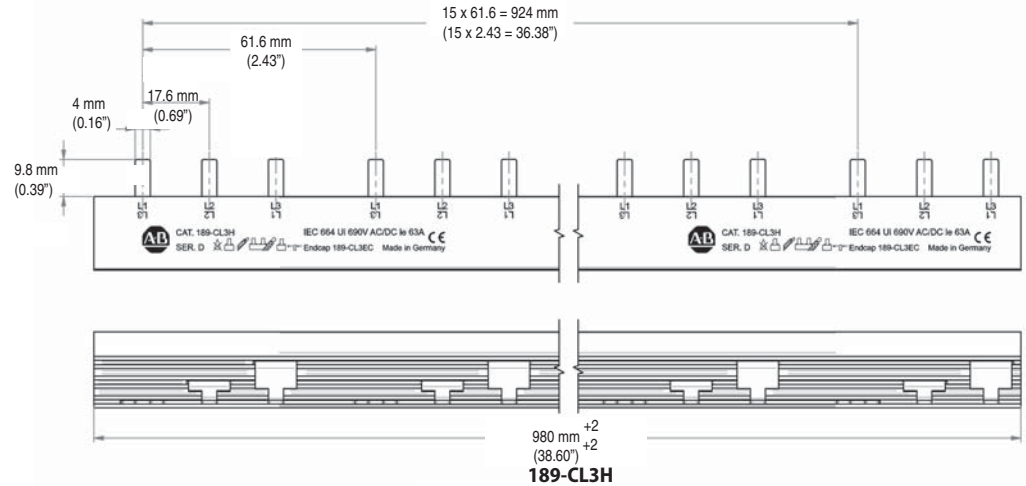

189-CL3H

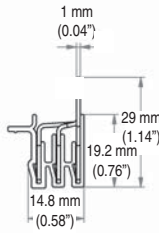

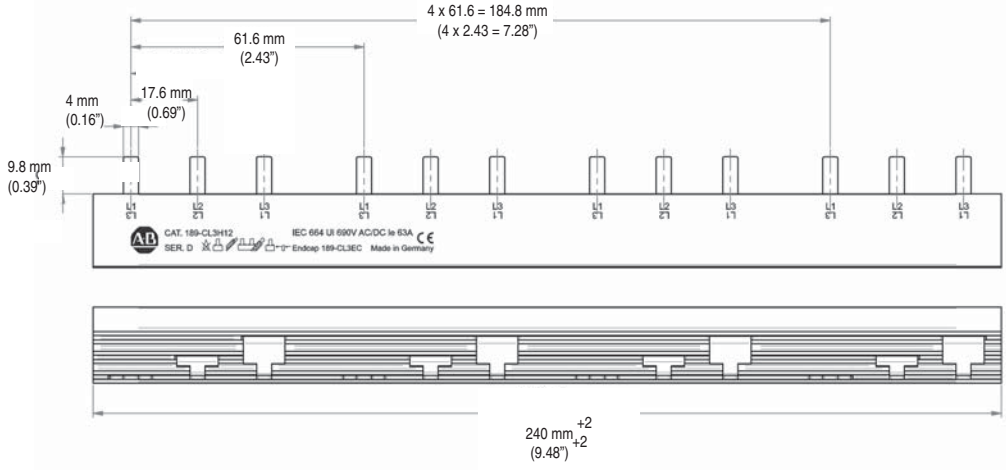

189-CL3H12

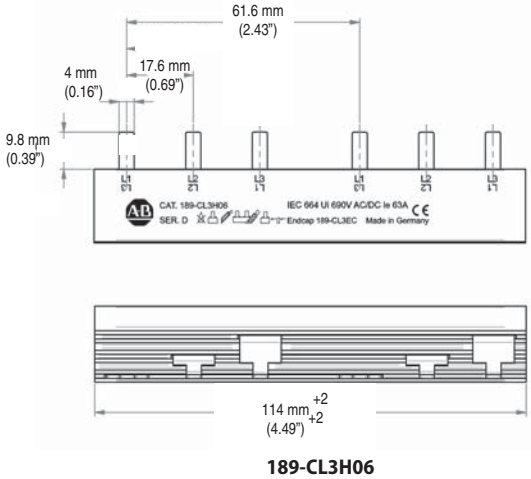

189-CL3H06

Bus Bar Approximate Dimensions

Note: Dimensions are shown in millimeters (inches). Dimensions are not intended for manufacturing purposes.

4-Phase Bus Bars

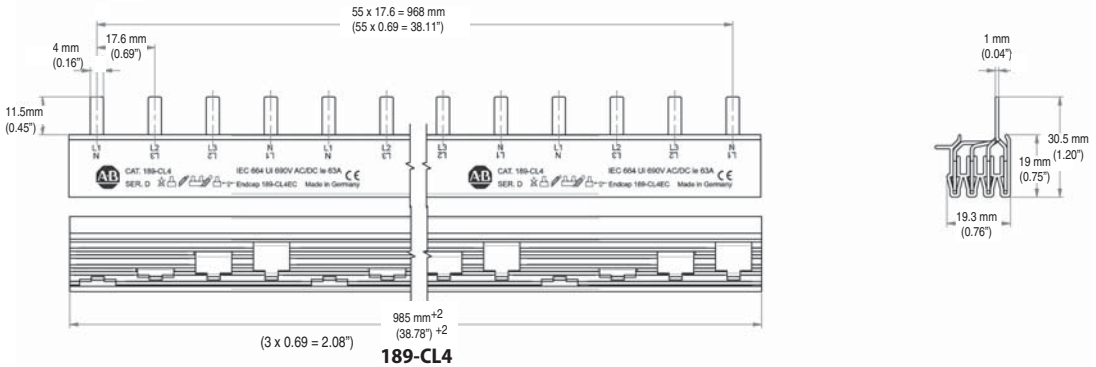

189-CL4

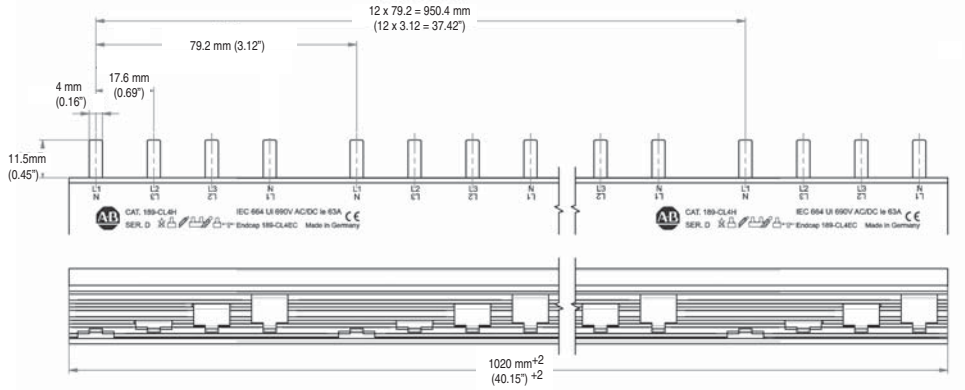

189-CL4H

2- and 4-Phase Bus Bars for connection to 1492-RCD

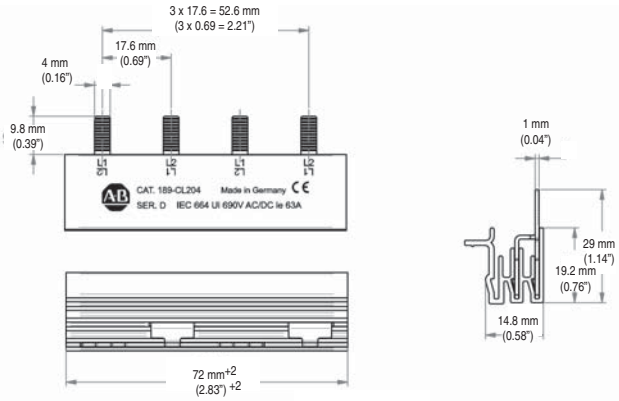

189-CL204

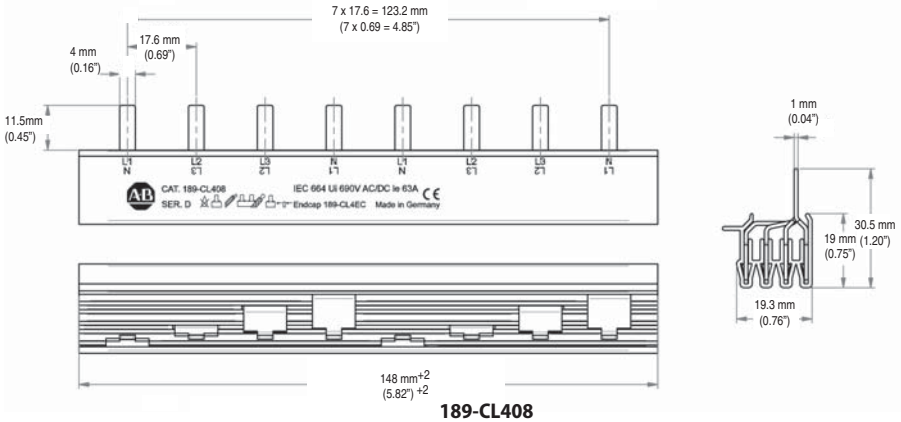

189-CL408

Bus Bar Accessory Approximate Dimensions

Note: Dimensions are shown in millimeters. Dimensions are not intended for manufacturing purposes.

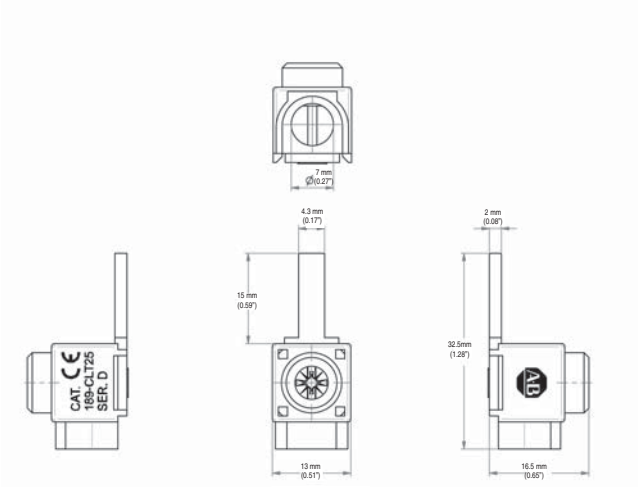

189-CLT25

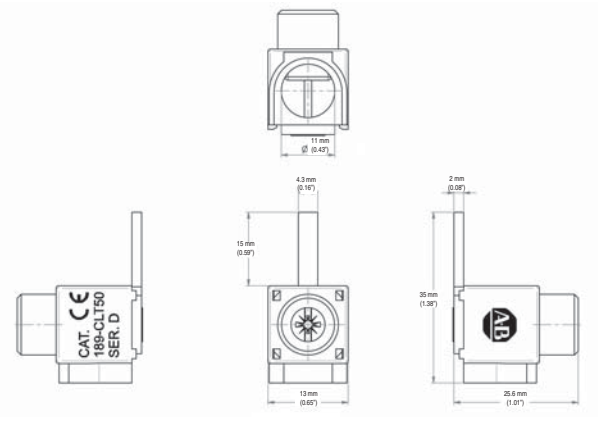

189-CLT50

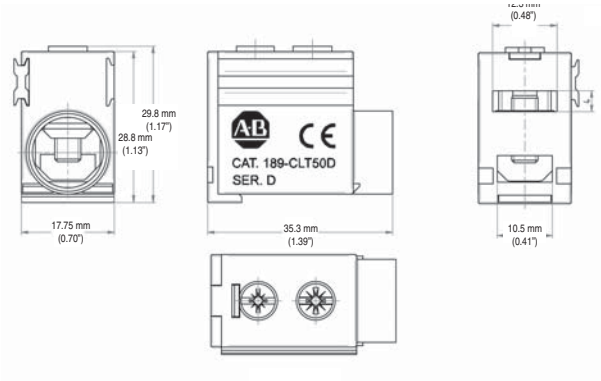

189-CLT50D

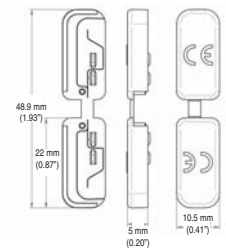

189-CL1EC

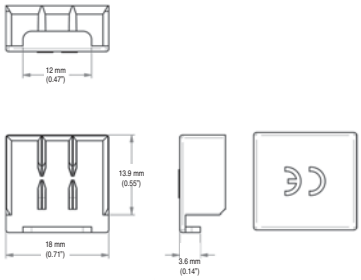

189-CL3EC

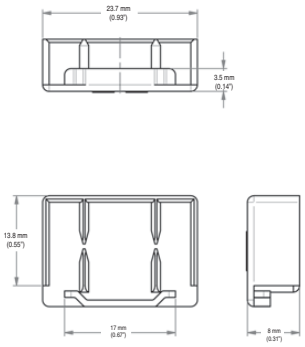

189-CL4EC

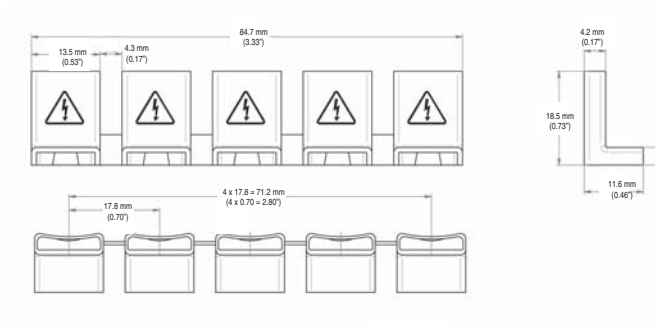

189-CLPS

1492-RCD Residual Current Devices

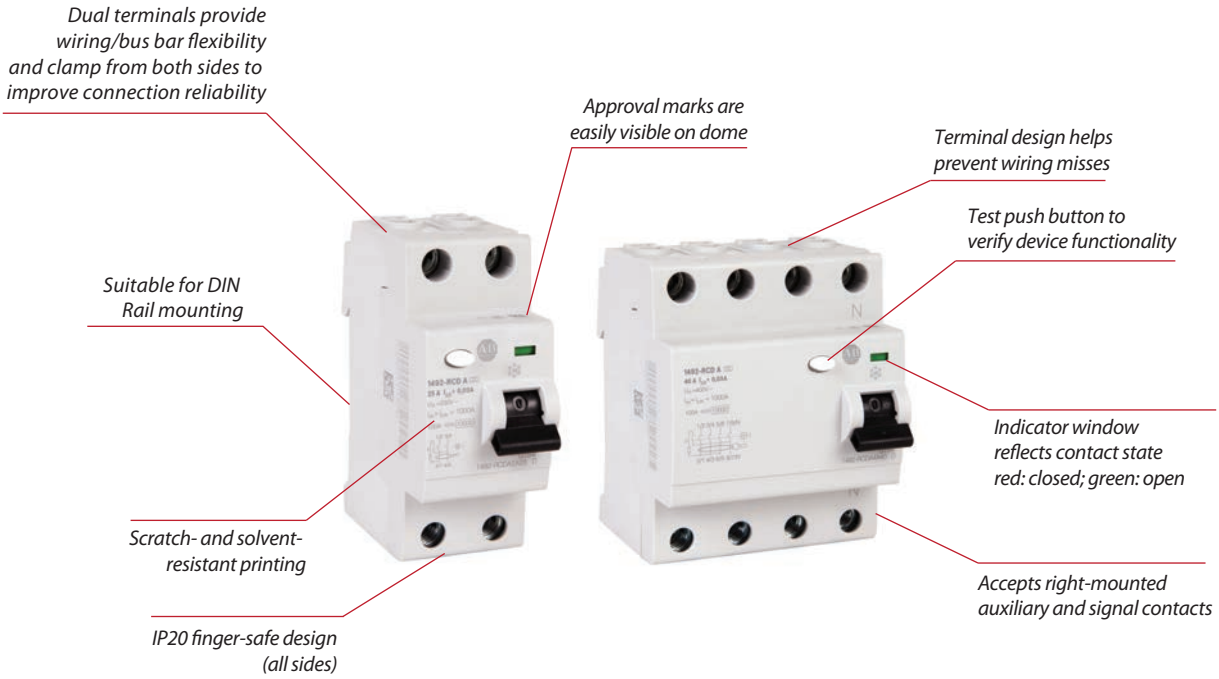

The Bulletin 1492-RCD line includes Residual Current Devices, also known as Residual Current Circuit Breakers, for detecting and interrupting leakage current to ground. By detecting small leakage currents and disconnecting all ungrounded connectors quickly, RCDs can prevent injury to exposed personnel and damage to equipment.

RCDs are used in series with miniature circuit breakers for additional circuit protection from not only overload and short circuit, but also ground fault. Many short circuits begin as undetected ground faults. Using an RCD in an application may detect problems before costly equipment damage and downtime occurs.

These devices are Type A Residual Current Devices to IEC Standards.

1492-RCD Residual Current Devices

Current Ratings	25, 40, 63, 80 A
Rated Sensitivity IΔn	30, 100, 300, 500 mA
Poles	2, 4
Standards Compliance	UL 1053 ANSI/NFPA 70 EN 61008 * CSA C22.2 No.144 GB 16916
Certifications	cURus Recognized, File No. E53935 CE Marked CCC Certified VDE Certified * RoHS Compliant

Features

- Provides protection against current leakage to ground (earth) caused by an insulation loss between a live conductor and an exposed conductive part (such as an abraded wire, or a grounded person touching the live conductor)
- Suitable for protection against AC and pulsating DC (rectified AC) earth leakage current
- 30 mA sensitivity devices for personnel protection (consult local requirements)
- 100, 300 and 500 mA sensitivity devices for equipment protection
- Dual terminals allow a more secure connection of two wires, or both a wire and bus bar
- Reversible line and load connections

* Catalog numbers with -US suffix are not EN or VDE certified.

Catalog Number Explanation

Note: Examples given in this section are for reference purposes. This basic explanation should not be used for product selection; some combinations may not produce a valid catalog number.

1492	-	RCDA	2	A	25		-	
		a	*b*	*c*	*d*	*e*		*f*

a

Type	
Code	**Description**
RCDA	Residual Current Device, Type A

b

Poles	
Code	**Description**
2	2-Pole
4	4-Pole

c

Sensitivity IΔn	
Code	**Rated Sensitivity [mA]**
A	30
B	100
C	300
D	500

d

Rated Current (I_n)	
Code	**Current [A]**
25	25
40	40
63	63
80	80

e

Delay Option (available on select 4-pole devices)	
Code	**Description**
	Can be left blank
S	With Delay

f

United States 110V Option (available on select 30 mA sensitivity versions)	
Code	**Description**
	Can be left blank
US	United States 110V

Product Selection

Sensitivity (mA)	**Rated Current (A)**	**2-Pole (1-Pole + Neutral)**		**4-Pole (3-Pole + Neutral)**		
		Ut min = 110V	**Ut min = 170V**	**Ut min = 110V**	**Ut min = 110V (With Delay)**	**Ut min = 170V**
30	25	1492-RCDA2A25-US	1492-RCDA2A25	1492-RCDA4A25-US	—	1492-RCDA4A25
	40	1492-RCDA2A40-US	1492-RCDA2A40	1492-RCDA4A40-US	—	1492-RCDA4A40
	63	—	—	1492-RCDA4A63-US	—	1492-RCDA4A63
	80	—	—	—	—	1492-RCDA4A80
100	25	1492-RCDA2B25	—	1492-RCDA4B25	—	—
	40	1492-RCDA2B40	—	1492-RCDA4B40	1492-RCDA4B40S	—
	63	—	—	1492-RCDA4B63	1492-RCDA4B63S	—
300	25	1492-RCDA2C25	—	1492-RCDA4C25	—	—
	40	1492-RCDA2C40	—	1492-RCDA4C40	1492-RCDA4C40S	—
	63	—	—	1492-RCDA4C63	1492-RCDA4C63S	—
	80	—	—	1492-RCDA4C80	—	—
500	25	—	—	1492-RCDA4D25	—	—
	40	—	—	1492-RCDA4D40	—	—
	63	—	—	1492-RCDA4D63	—	—
	80	—	—	1492-RCDA4D80	—	—
Diagram		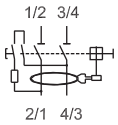		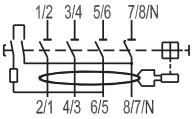		

Specifications

General Data		
Poles		2,4
Rated current I_n		25, 40, 63, 80 A
Rated sensitivity IΔn	2-pole	30, 100, 300 mA
	4-pole	30, 100, 300, 500 mA
Electrical Ratings		
Rated short-circuit strength		10 kA with 63 A gG/gL back-up fuse, 10 kA with 80 A gG/gL back-up fuse for 80 A device
Rated operational voltage U_e per IEC/EN		230/400V AC
Rated voltage U_e per UL		480Y/277V AC
Max. operating voltage of circuit test		254V AC
Min. operating voltage of circuit test		110V *
Rated frequency		50/60 Hz
Rated conditional short-circuit		10 kA (SCPD - fuse gG 100 A)
Rated residual breaking capacity		1 kA
Rated impulse withstand voltage U_{imp} (1.2/50µs)		4 kV
Dielectric test voltage at ind. freq. for 1 min.		2.5 kV
Electrical endurance		10,000 operations
Mechanical		
Indicator window		Red ON/green OFF
Protection degree	Housing	IP4X
	Terminals	IP2X
Environmental		
Ambient temperature (with daily average +35 °C)		-25...+55 °C
Storage temperature		-40...+70 °C
Mechanical endurance		20,000 operations
Installation		
Terminal type		Dual terminal
Cross-section of wire - solid, stranded, flexible (front/back terminal slot)	25...63 A	25/25 mm²
		18...4 AWG
	80 A	35/35 mm²
		18. . .2 AWG
Cross-section of bus bars (front/back terminal slot)	25...63 A	10/10 mm²
	80 A	16/16 mm²
Tightening torque	25...63 A	2.8 N·m
		25 in·lb
	80 A	4.8 N·m
		43 in·lb
Mounting		DIN Rail EN 60715 (35 mm) with fast clip device
Supply		Optional

* Ut min = 170V for selected 30 mA sensitivity types as indicated in the product selection chart on page 87.

Approximate Dimensions and Weight		
Dimensions (H x D x W)	2-pole	88 x 67 x 35 mm
	4-pole	88 x 67 x 70 mm
Weight	2-pole	200 g (7.1 oz.)
	4-pole	350 g (12.3 oz.)
Combination with Auxiliary Elements		
Auxiliary contact		Yes
Signal contact		Yes

Power Loss Due to Current

Rated Current [A]	Power Loss [W]	
	2-pole	4-pole
25	1	1.3
40	2.4	3.2
63	3.2	4.4
80	8.8	33.3

Approximate Dimensions

Note: Dimensions are shown in millimeters (inches). Dimensions are not intended for manufacturing purposes.

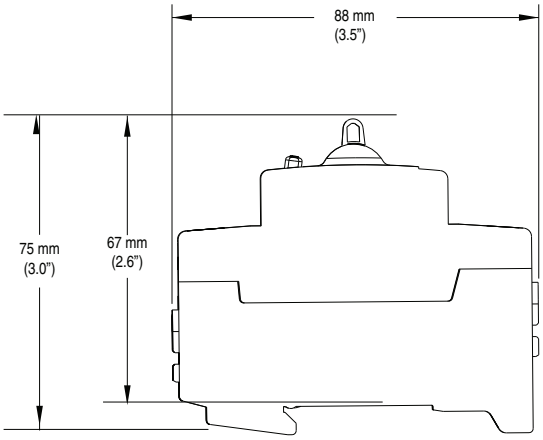

2-, 4-Pole

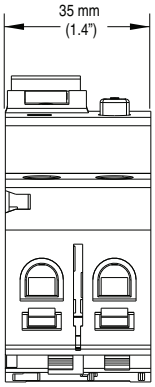

2-Pole

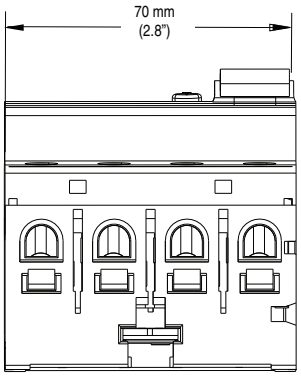

4-Pole

Accessories

Right Mount

Photo	Product Description ‡★Δ	Contacts	Standards	Certifications	UL/CSA Max. Current/Voltage	IEC Ratings Current/Voltage	Cat. No.
	Auxiliary/Signal Contact	1 N.O./N.C. (1 C.O.) 	UL 1077 CSA 22.2 No. 235 EN 60947-5-1 GB 14048.5	UL Recognized CSA Certified CE Marked VDE Certified CCC Certified	1 A @ 480V AC 2 A @ 277V AC 1.5 A @ 125V DC 2 A @ 60V DC 4 A @ 24V DC	2 A @ 230V (AC-14) 1 A @ 400V (AC-14) 1.5 A @ 110V (DC-12) 1 A @ 220V (DC-12) 4 A @ 24V (DC-13) 2 A @ 60V (DC-13)	189-ASCR3
	Auxiliary Contact	1 N.O./N.C. (1 C.O.) 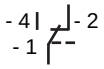	UL 1077 CSA 22.2 No. 235 EN 60947-5-1 GB 14048.5	UL Recognized CSA Certified CE Marked VDE Certified CCC Certified	1 A @ 480V AC 2 A @ 277V AC 1.5 A @ 125V DC 2 A @ 60V DC 4 A @ 24V DC	2 A @ 230V (AC-14) 1 A @ 400V (AC-14) 1.5 A @ 110V (DC-12) 1 A @ 220V (DC-12) 4 A @ 24V (DC-13) 2 A @ 60V (DC-13)	189-AR3
		1 N.O. + 1 N.C. 	UL 1077 CSA 22.2 No. 235 EN 60947-5-1 GB 14048.5	UL Recognized CSA Certified CE Marked VDE Certified CCC Certified	1 A @ 400V AC 2 A @ 230V AC 1 A @ 50V DC 2 A @ 30V DC	2 A @ 230V (AC-14) 1 A @ 400V (AC-14) 2 A @ 30V (DC-12) 1 A @ 50V (DC-12) 2 A @ 30V (DC-13) 1 A @ 50V (DC-13)	189-AR11
		2 N.C. 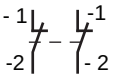	UL 1077 CSA 22.2 No. 235 EN 60947-5-1 GB 14048.5	UL Recognized CSA Certified CE Marked VDE Certified CCC Certified	1 A @ 400V AC 2 A @ 230V AC 1 A @ 50V DC 2 A @ 30V DC	2 A @ 230V (AC-14) 1 A @ 400V (AC-14) 2 A @ 30V (DC-12) 1 A @ 50V (DC-12) 2 A @ 30V (DC-13) 1 A @ 50V (DC-13)	189-AR02
		2 N.O. 	UL 1077 CSA 22.2 No. 235 EN 60947-5-1 GB 14048.5	UL Recognized CSA Certified CE Marked VDE Certified CCC Certified	1 A @ 400V AC 2 A @ 230V AC 1 A @ 50V DC 2 A @ 30V DC	2 A @ 230V (AC-14) 1 A @ 400V (AC-14) 2 A @ 30V (DC-12) 1 A @ 50V (DC-12) 2 A @ 30V (DC-13) 1 A @ 50V (DC-13)	189-AR20

‡ A maximum of one C.O. type signal contact, and one C.O. type auxiliary contact ***OR*** two C.O. type auxiliary contacts may be installed per 1492-RCD.

★ A maximum of one 189-AR11, -AR02, or -AR20 auxiliary contact may be installed per 1492-RCD. They may not be combined with C.O. type contacts.

Δ A maximum of three accessories of any type may be installed per 1492-RCD. The signal contact must be mounted closest to the RCD, then the auxiliary contact(s). For allowed combinations, and installation instructions please contact your local Rockwell Automation sales office or Allen-Bradley distributor.

Accessory Approximate Dimensions

Note: Dimensions are shown in millimeters (inches). Dimensions are not intended for manufacturing purposes.

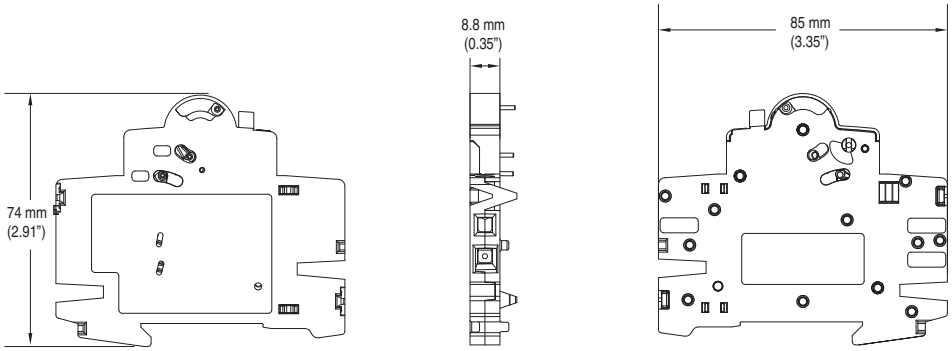

189-ASCR3

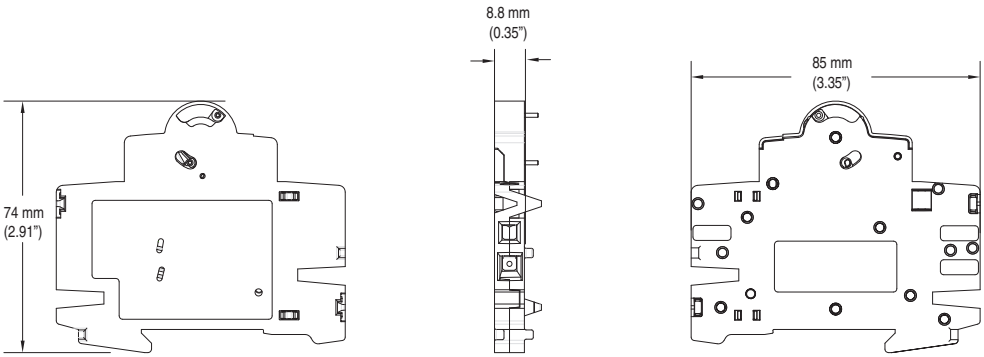

189-AR3

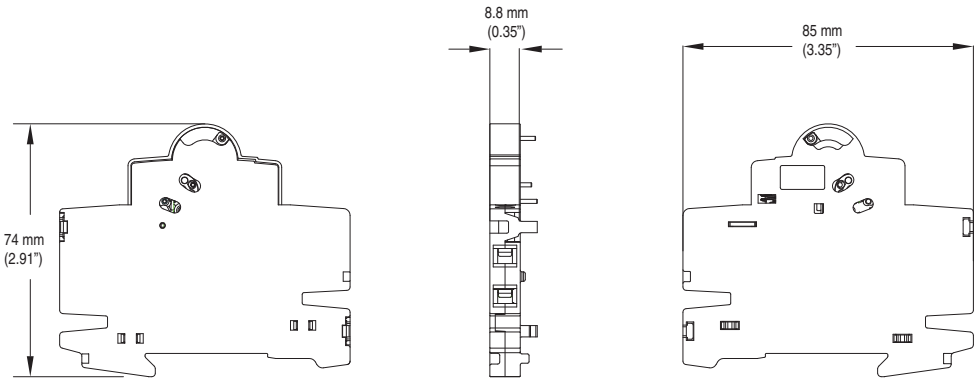

189-AR11, 189-AR02, 189-AR20

Bus Bars

1492-RCD Cuttable Bus Bars

Description	Pins	Pkg. Qty.	Cat. No. ★
2-Phase MCB to RCD	4	10	189-CL204
4-Phase MCB to RCD	8	10	189-CL408

★ These devices are CE Marked, but not certified to any UL, CSA, or other standard.

1492-RCD Bus Bar Accessories

Description	Pkg. Qty.	Cat. No. ★
Terminal Power Feed, 6...25 mm^2	10	189-CLT25
Terminal Power Feed, 6...50 mm^2	10	189-CLT50
Dedicated Power Feed, 50 mm^2	10	189-CLT50D
For 2-phase bus bar‡	10	189-CL3EC
For 4-phase bus bar	10	189-CL4EC
Protective Shroud for unused pins	10	189-CLPS

★ These devices are CE Marked, but not certified to any UL, CSA, or other standard.

‡ 189-CL3EC also used for 2- and 3-phase MCB bus bars.

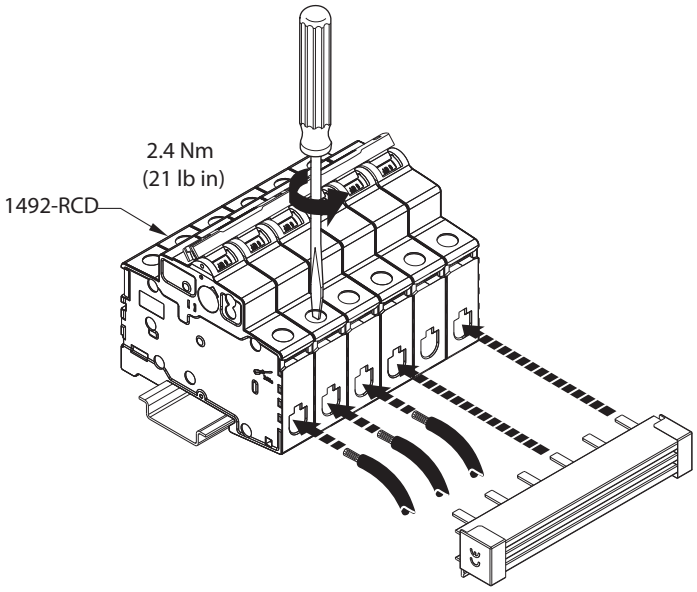

Bus Bar Approximate Dimensions

Note: Dimensions are shown in millimeters (inches). Dimensions are not intended for manufacturing purposes.

2- and 4-Phase Bus Bars

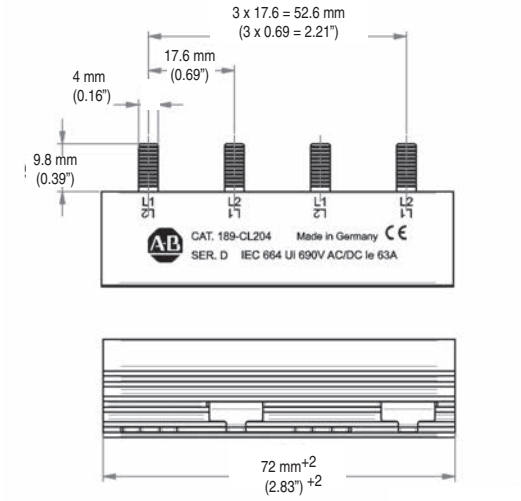

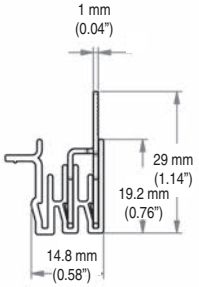

189-CL204

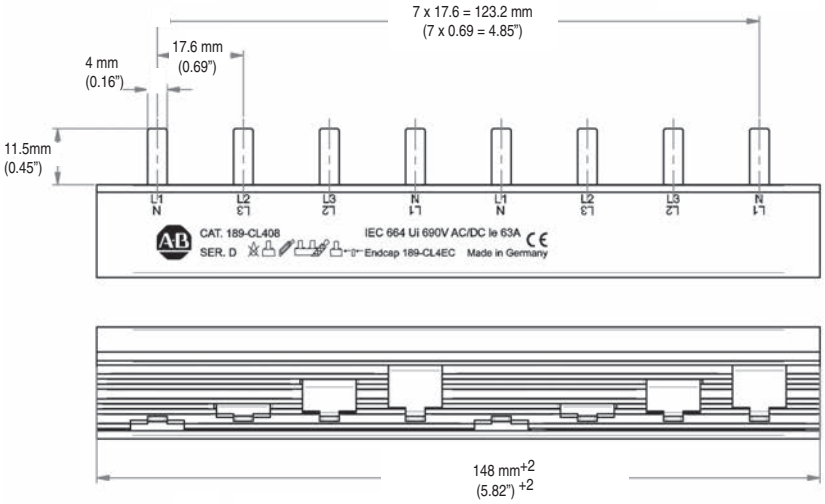

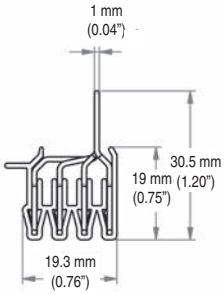

189-CL408

Bus Bar Accessory Approximate Dimensions

Note: Dimensions are shown in millimeters. Dimensions are not intended for manufacturing purposes.

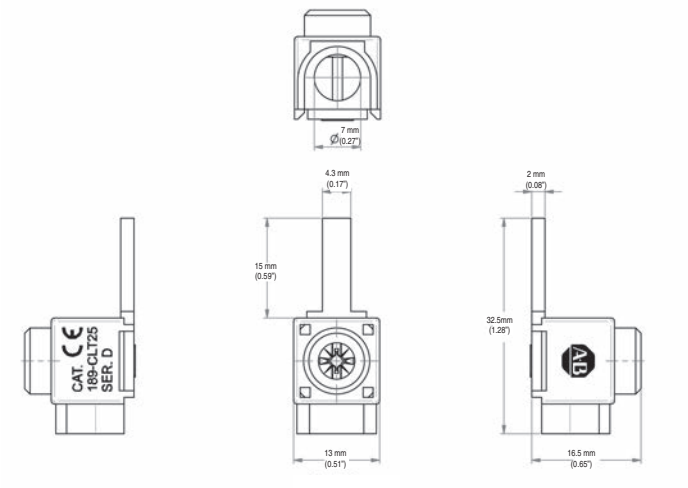

189-CLT25

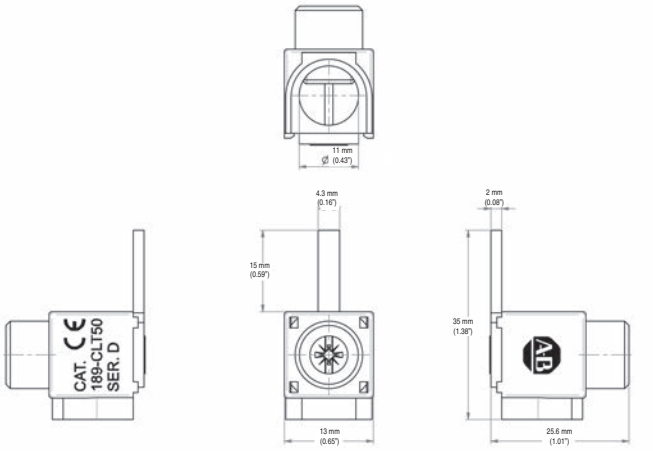

189-CLT50

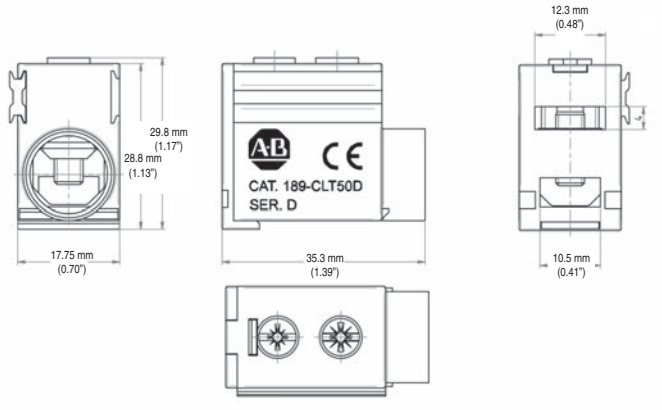

189-CLT50D

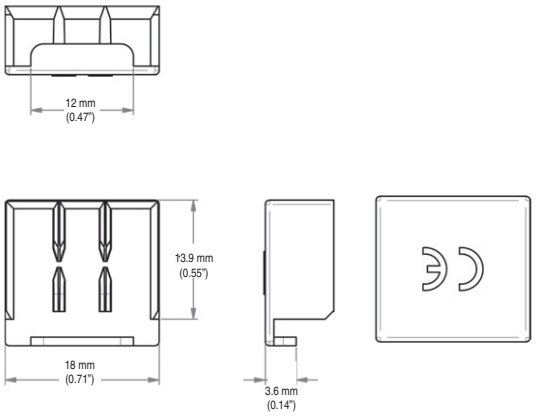

189-CL3EC

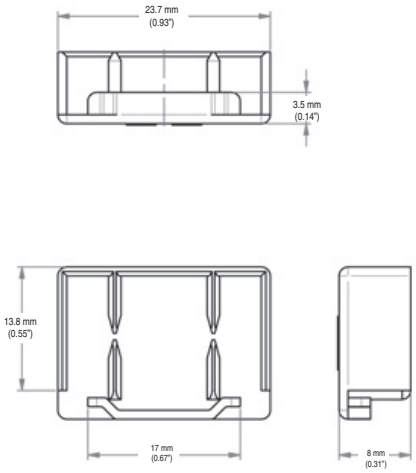

189-CL4EC

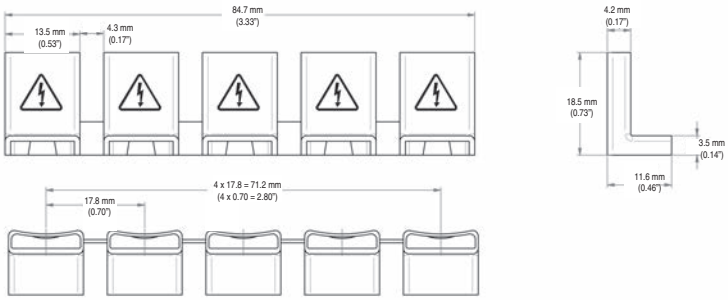

189-CLPS

1692 Electronic Circuit Protectors

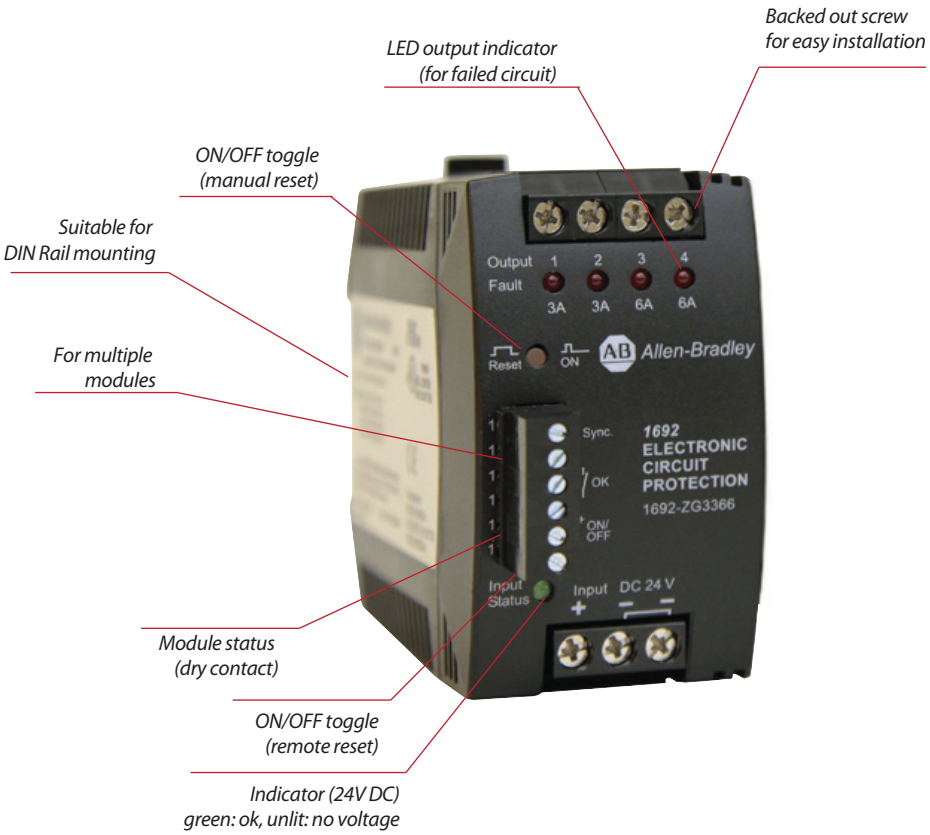

Bulletin 1692 Electronic Circuit Protection Modules protect the secondary circuits of 24V DC switched mode power supplies. These modules monitor both supply voltage and load currents, and you can monitor and control the modules both locally and remotely.

Designed for 24VDC circuits, the 1692 provides comprehensive protection against short circuit and overcurrent conditions while allowing for inrush current.

Features

- Input voltage monitoring
- Current monitoring and limitations of the 4 outputs
- Fast tripping
- Select devices offer certified NEC Class 2 circuits

1692 Electronic Circuit Protectors	
Voltage	24V DC (18...30V DC)
Output Current	1 A...12 A, (select devices – NEC Class 2)
Standards Compliance	ATEX 94/9 EC & 2014/34/EU CSA Class I, Division 2, Groups A, B, C, and D CSA C22.2, No. 142 EN 60950-1 ISA 12.12 NEC Class 2 (select devices) UL 508 UL 2367
Certifications	ATEX CE Marked CSA cULus File No. E56639 cURus Recognized

Catalog Number Explanation

Note: Examples given in this section are for reference purposes. This basic explanation should not be used for product selection; some combinations may not produce a valid catalog number.

1692	-	Z	G	XXXX
		a	*b*	*c*

a

Module Voltage	
Code	**Description**
Z	24V DC

b

Protection Scheme	
Code	**Description**
G	Module Protection
R	G and Class 2

c

Output Current Rating	
Code	**Description**
1111	1 A, 1 A, 1 A, 1 A
2222	2 A, 2 A, 2 A, 2 A
3333	3 A, 3 A, 3 A, 3 A
4444	4 A, 4 A, 4 A, 4 A
6666	6 A, 6 A, 6 A, 6 A
AAAA	10 A, 10 A, 10 A, 10 A
3366	3 A, 3 A, 6 A, 6 A
66BB	6 A, 6 A, 12 A, 12 A
CLSS	(4) NEC Class 2 circuits (each circuit max 100 VA)

Product Selection

Voltage	Protection Type	NEC Class 2	Output [A]				Cat. No.
			1	2	3	4	
24V DC	Module	Yes	1	1	1	1	1692-ZR1111
		Yes	2	2	2	2	1692-ZR2222
		No	3	3	3	3	1692-ZG3333
		No	4	4	4	4	1692-ZG4444
		No	6	6	6	6	1692-ZG6666
		No	10	10	10	10	1692-ZGAAAA
		No	3	3	6	6	1692-ZG3366
		No	6	6	12	12	1692-ZG66BB
		Yes	(4) NEC Class 2 circuits (100 VA /circuit max)				1692-ZRCLSS

Specifications

Electrical Ratings	
Voltage	24V DC (18...30V DC)
Output current	1 A...12 A, select devices – NEC Class 2
Output ratings	Isolated safety extra-low voltage (SELV)
Environmental	
Operating temperature	-25...+70 °C (-13...158 °F) (non-condensing)
Storage temperature	-40 °C...+85 °C (-40...185 °F)
Humidity	5...95% (non-condensing)
Degree of pollution	2
Construction	
Terminal wire gauge	24...10 AWG (0.2...4mm^2)
Termination type	Screw
Dimensions in. (mm)	1.77 x 2.95 x 3.58 (45 x 75 x 91)
Weight lb. (g)	0.26 (120)

Approximate Dimensions

Note: Dimensions are shown in millimeters (inches). Dimensions are not intended for manufacturing purposes.

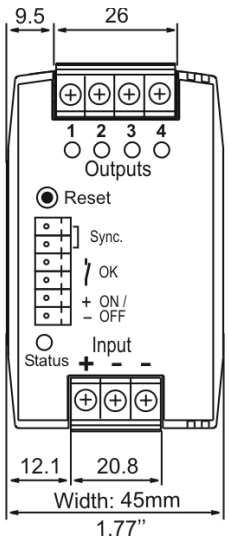

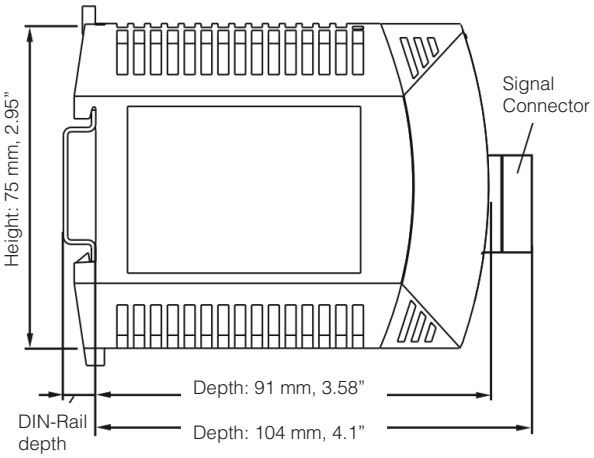

1492-MC Circuit Breakers

1492-MCA/MCB

1492-MCE/MCG

1492-MCA/MCB Circuit Breakers

Bulletin 1492-MC thermal magnetic Circuit Breakers are general-purpose devices suitable for branch circuit protection in industrial applications. They combine thermal and magnetic trip actions and provide accurate overload and short-circuit protection for conductors and connected equipment.

Features

- Thermal-magnetic protection
- Available in ½" and 1" pole widths
- 10 kA interrupting capacity

1492-MCE/MCG Ground Fault Circuit Breakers

This line of ground fault sensing breakers are designed, manufactured and certified to North American and the equivalent CSA standards.

The 1492-MCE devices are Ground Fault Equipment Protectors (GFEPs) that protect from low-level fault currents. With a sensing threshold of 30 mA, these devices are suitable for equipment protection.

The 1492-MCG devices are Ground Fault Circuit Interrupters (GFCIs) that protect from low-level fault currents. With a sensing threshold of 5 mA, these devices are suitable for personnel protection.

The 1492-MCGA devices are Ground Fault Circuit Interrupters (GFCIs) with inherit self test capability as required by the UL 943 standard.

Features

- UL 489 circuit breaker with GFCI (5 mA sensitivity) or GFEP (30 mA sensitivity)
- 10 kA interrupting capacity

1492-MC Circuit Breakers	
Rated Voltage	120/240V AC, 240V AC
Interrupting Capacity	10 kA
Current Ratings	10...100 A
Poles	1, 2, 3
Standards Compliance	UL 489 CSA C22.2 No. 5 HACR (10...100 A) SWD (15 and 20 A) for Switching Duty for fluorescent lighting applications
1492-MCE only	UL 1053 CSA C22.2 No. 144
1492-MCG only	UL 943 CSA C22.2 No. 144
Certifications	UL Listed, File No. E197878 CSA Certified, File No. 216034

Catalog Number Explanation

Note: Examples given in this section are for reference purposes. This basic explanation should not be used for product selection; some combinations may not produce a valid catalog number.

1492-MC	A	A	1	15
	a	*b*	*c*	*d*

a

Device Type	
Code	**Description**
A	1/2 in. wide/pole (DIN Rail mounting)
B	1 in. wide/pole (DIN Rail mounting)
E	GFEP (30 mA)
G	GFCI (5 mA)

b

Interrupting Capacity	
Code	**Description**
A	10 kA AIC
AT	10 kA AIC — with self test capability (GFCI only)

c

Poles	
Code	**Description**
1	1-pole
2	2-pole
2H	2-pole (240V AC)
3	3-pole

d

Current Rating	
Code	**Rated Current (*In*)**
10	10
15	15
20	20
25	25
30	30
35	35
40	40
45	45
50	50
55	55
60	60
70	70
80	80
90	90
A0	100

Product Selection

1492-MCA/MCB Branch Circuit Breakers

Photo	Continuous Ampere Rating @ 40 °C (104 °F) [A]	Width per Pole [in.]	Cat. No. 120/240V AC 1-Pole	Cat. No. 120/240V AC 2-Pole	Width per Pole [in.]	Cat. No. 240V AC 2-Pole	Cat. No. 240V AC 3-Pole
	10	1/2	1492-MCAA110	1492-MCAA210	—	—	—
	15	1/2	1492-MCAA115	1492-MCAA215	1/2	1492-MCAA2H15	1492-MCAA315
	20	1/2	1492-MCAA120	1492-MCAA220	1/2	1492-MCAA2H20	1492-MCAA320
	25	1/2	1492-MCAA125	1492-MCAA225	1/2	1492-MCAA2H25	1492-MCAA325
	30	1/2	1492-MCAA130	1492-MCAA230	1/2	1492-MCAA2H30	1492-MCAA330
	35	1/2	1492-MCAA135	1492-MCAA235	1	1492-MCBA2H35	1492-MCBA335
	40	1/2	1492-MCAA140	1492-MCAA240	1	1492-MCBA2H40	1492-MCBA340
	45	1/2	1492-MCAA145	1492-MCAA245	1	1492-MCBA2H45	1492-MCBA345
	50	1/2	1492-MCAA150	1492-MCAA250	1	1492-MCBA2H50	1492-MCBA350
	55	1/2	1492-MCAA155	1492-MCAA255	1	1492-MCBA2H55	1492-MCBA355
	60	1/2	1492-MCAA160	1492-MCAA260	1	1492-MCBA2H60	1492-MCBA360
	70	1	1492-MCBA170	1492-MCBA270	1	1492-MCBA2H70	1492-MCBA370
	80	1	1492-MCBA180	1492-MCBA280	1	1492-MCBA2H80	1492-MCBA380
	90	1	1492-MCBA190	1492-MCBA290	1	1492-MCBA2H90	1492-MCBA390
	100	1	1492-MCBA1A0	1492-MCBA2A0	1	1492-MCBA2HA0	1492-MCBA3A0

1492-MCE/MCG Ground Fault Circuit Breakers

Photo	Continuous Ampere Rating @ 40 °C (104 °F) [A]	Width per Pole [in.]	Cat. No. 120V AC 1-Pole	Cat. No. 120/240V AC‡ 2-Pole
	GFEP (30 mA Sensitivity)			
	15	1	1492-MCEA115	1492-MCEA215
	20	1	1492-MCEA120	1492-MCEA220
	25	1	1492-MCEA125	1492-MCEA225
	30	1	1492-MCEA130	1492-MCEA230
	40	1	1492-MCEA140	1492-MCEA240
	50	1	—	1492-MCEA250
	GFCI (5 mA Sensitivity)			
	15	1	1492-MCGAT115	1492-MCGAT215
	20	1	1492-MCGAT120	1492-MCGAT220
	25	1	1492-MCGAT125	1492-MCGAT225
	30	1	1492-MCGAT130	1492-MCGAT230
	40	1	1492-MCGAT140	1492-MCGAT240
	50	1	—	1492-MCGAT250

‡ These devices are for grounded neutral 240V wye systems only.

Accessories

Device Description		1-Pole	2- and 3-Pole
Locking Attachment for Circuit Breaker	1492-MCAAxxx	1492-AMCAL1	1492-AMCALM
	1492-MCBAxxx	1492-AMCBL1	
Finger protection cover for 1 in. wide Cat. No. 1492-MCBxxx, package of 10 (one required for line and one required for load for each pole) (not for GFCI / GFEP)		1492-AMCBFP	
DIN Rail Adapter for GFCI and GFEP, use two per pole		1492-AMCDIN1	
Panel Mounting Clips for GFCI and GFEP, use two per device		1492-AMCP1	

Terminals

Line and Load Terminals	Continuous Current Rating	Wire Type	Wire Range [AWG]	Terminal Torque	Line Strip Length	Cat. No.
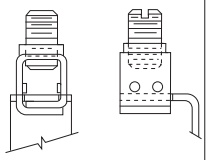	10…60 A	Copper (Cu)	14…10	20 lb•in (2.3 N•m)	7/16 in.	1492-MCAAxxx
			8	25 lb•in (2.8 N•m)		
			6…4	27 lb•in (3.0 N•m)		
1/8 in. Allen Head 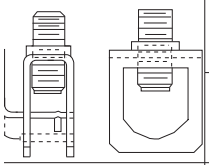	35…60 A		14…10	20 lb•in (2.3 N•m)		1492-MCBAxxx
			8…4	32 lb•in (3.6 N•m)		
	70…100 A		4…1/0	50 lb•in (5.6 N•m)		
Line 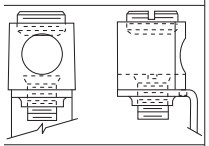	15…50 A		14…10	20 lb•in (2.3 N•m)	9/16 in.	1492-MCEAxxx
			8	25 lb•in (2.8 N•m)	—	
Load 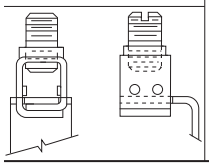			6…4	27 lb•in (3.0 N•m)	—	1492-MCGATxxx

Specifications

Electrical Ratings	
Rated voltage	See rated voltage tables
Continuous current rating @ 40°C (104°F)	10, 15, 20, 25, 30, 35, 40, 45, 50, 55, 60, 70, 80 90, 100 A
Rated short circuit capability	See interrupting capacity tables
Environmental	
Operating temperature	0...60 °C (32...140 °F) (non-condensing)
Shipment and short term storage limits	-40 °C...+80 °C (-40...176 °F)
Degree of protection	1/2 in. wide circuit breakers are finger safe from front per IEC. Terminal covers available for 1 in. wide circuit breaker.
Mechanical	
Mounting	DIN rail
Wire size	See terminal table
Terminal torque	
Recommended wire strip length	

1492-MCA/MCB Thermal Magnetic Rated Voltage and Interrupting Capacity

Cat. No.	Rated Voltage [V AC]	Rated Voltage [V DC] ★	Interrupting Capacity (rms Symmetrical Amperes) AC Rating [kA]	Interrupting Capacity (rms Symmetrical Amperes) DC Rating ★ [kA]
1492-MCAA1xx	120/240	24, 48, 62.5	10	3
1492-MCAA2xx				
1492-MCAA2Hxx	240	24, 48, 62.5		3
1492-MCAA3xx				
1492-MCBA1xx	120/240	—		—
1492-MCBA2xx				
1492-MCBA2Hxx	240	—		—
1492-MCBA3xx				

★ Rating as supplementary protector.

1492-MCE/MCG Ground Sensing Rated Voltage and Interrupting Capacity

Cat. No.	Rated Voltage [V AC]	Interrupting Capacity (rms Symmetrical Amperes) AC Rating [kA]
1492-MCEA1xx	120	10
1492-MCEA2xx	120/240 ‡	
1492-MCGAT1xx	120	
1492-MCGAT2xx	120/240 ‡	

‡ These devices are for grounded neutral 240V wye systems only.

Application Information

Selection of a Bul. 1492-MC circuit breaker with appropriate circuit protection includes consideration of:

- Circuit voltage
- Circuit frequency
- Available short circuit current
- Continuous current rating
- Application considerations
- Special operating conditions

The following discussion is based upon National Electric Code and UL requirements. Similar considerations are appropriate for Canadian applications.

Circuit Voltage

Bul. 1492-MC circuit breakers are rated by voltage class. Applications should not exceed the listed voltage range (see Table 1).

Circuit Frequency

Bul. 1492-MC circuit breakers may be applied to frequencies from DC up to 60 Hz without derating. For applications above 60…400 Hz, contact Rockwell Automation with specific application information for the derating of the circuit breakers.

Available Short Circuit Current

Bul. 1492-MC circuit breakers should only be applied in those applications in which the available short-circuit (or fault) current is less than or equal to the interrupting rating shown in the Voltage and Interrupting Ratings table.

Continuous Current Rating

Bul. 1492-MC circuit breakers are rated in RMS amperes at a 40 °C (104 °F) ambient temperature per UL 489 (CSA 22.2 No. 5.1). This temperature is the ambient temperature external to an industrial enclosure. If a circuit breaker is applied in a temperature that exceeds the 40 °C (104 °F) ambient, then the circuit breaker should be derated. Contact your local Rockwell Automation sales office or Allen-Bradley distributor for derating information.

Application Considerations

The selection of a specific ampere rating for a specific application is dependent on the type of load and duty cycle and is governed by the National Electric Code (Canadian Electric Code) and UL/CSA. In general the codes require that overcurrent protection is at the current supply and at points where wire sizes are reduced. In addition the codes state that conductors be protected according to their current carrying capacity. There are specific situations that require application consideration, such as motor circuit, and guidelines for the selection for transformer protection.

Bulletin 1492-MC circuit breakers are "non-100% rated" as defined by UL 489 Part 7.1.4.2. As such the circuit breaker's rating should be loaded to no more than 80%, if used with continuous loads.

Branch Circuits:

Bulletin 1492-MC circuit breakers may be used to protect branch circuits. A branch circuit is the wiring portion of a system extending beyond the final overcurrent device protecting the circuit.

Guidelines established in NEC, CEC, UL, and CSA should be used to determine the specific device. The examples on page , also apply to the 1492-MC devices.

Coordinated Overcurrent Protection

Where an orderly shutdown is required to minimize the hazards to personnel and equipment, a system of coordination based upon the faulted or overloaded circuit is isolated by selective operation of only the overcurrent protective device closest to the overcurrent condition.

The user should select devices that meet this requirement.

References: NEC 240.12. Also see CEC.

Self Test Capability (GFCI only)

Per UL 943 (5.16 / 6.30), GFCI devices have built-in self test capability. The self test is an internal, automated function running in the background. For more information please refer to UL 943 standard.

Tripping Characteristics

Time Current Curve – 1-Pole Circuit Breaker

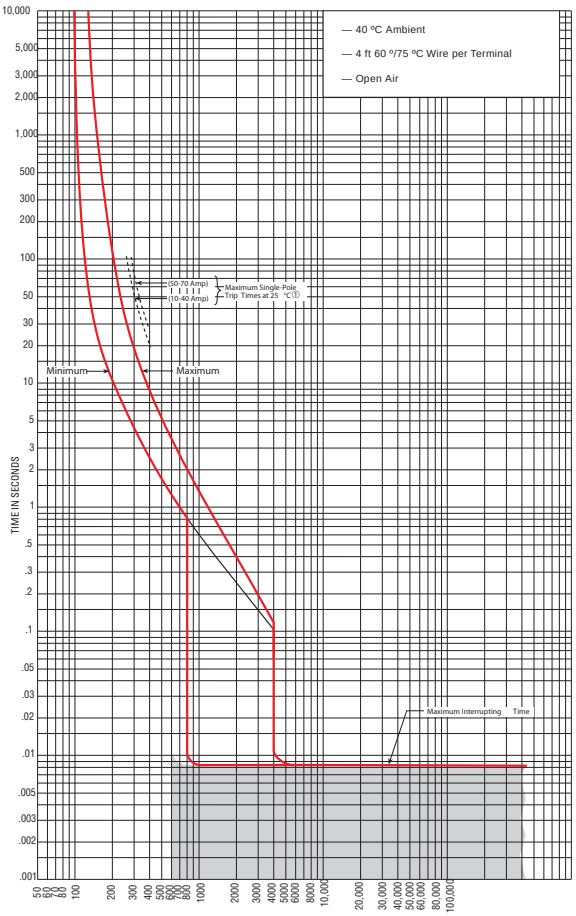

Time Current Curve – 2-Pole Circuit Breakers

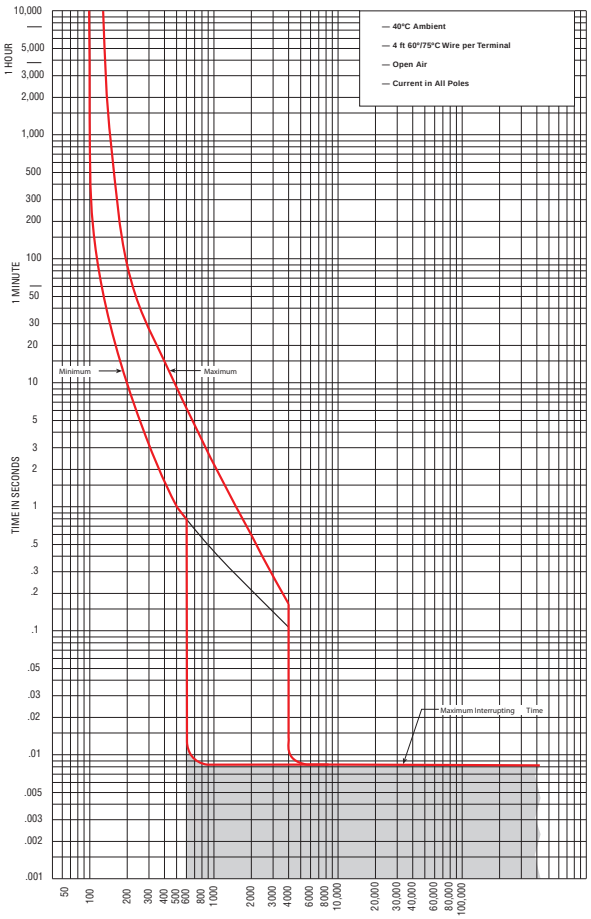

Tripping Characteristics

Time Current Curve – 3-Pole Circuit Breakers

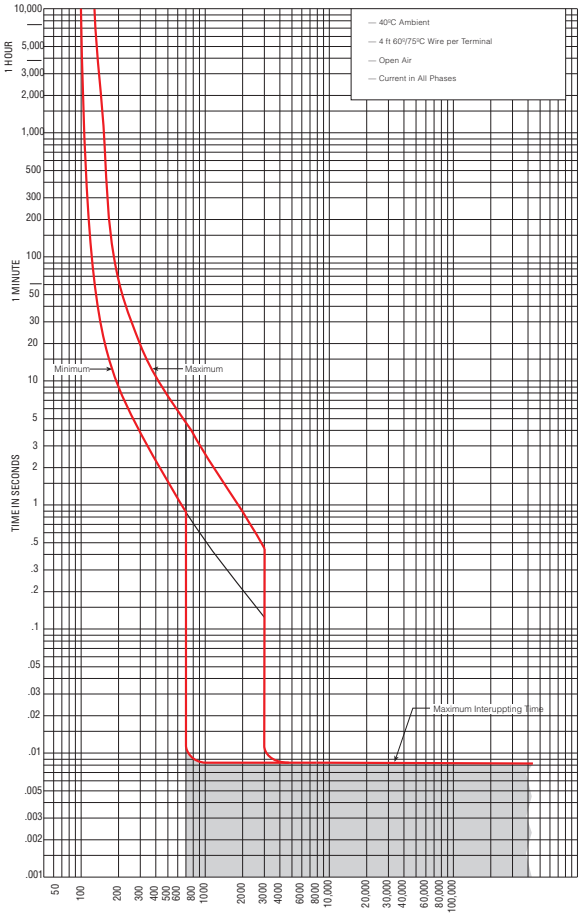

Approximate Dimensions

Note: Dimensions are shown in inches (mm). Dimensions are not intended for manufacturing purposes.

1492-MCAA

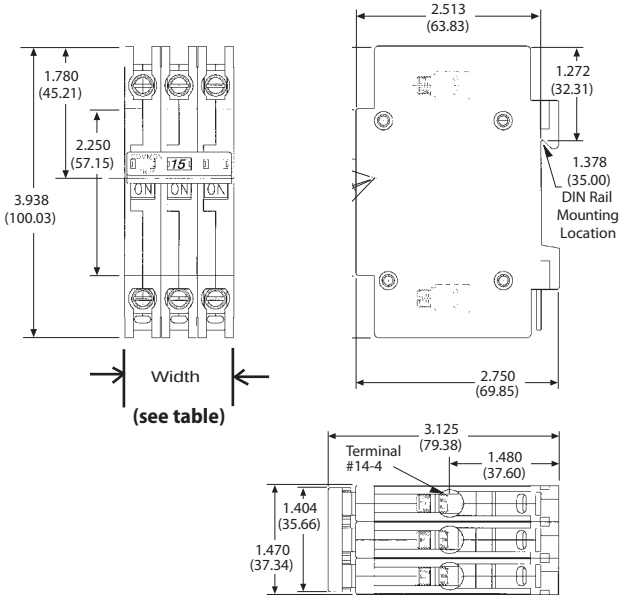

1-, 2-, 3-Pole (3-Pole shown)

1492-MCBA

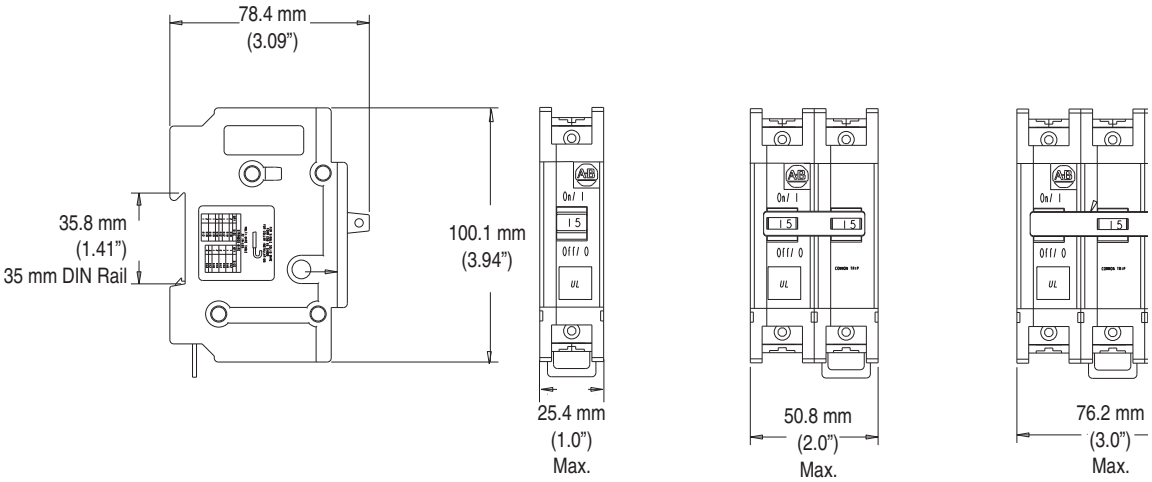

1-, 2-, 3-Pole **1-Pole** **2-Pole** **3-Pole**

Approximate Dimensions

Note: Dimensions are shown in inches. Dimensions are not intended for manufacturing purposes.

1492-MCE/1492-MCG

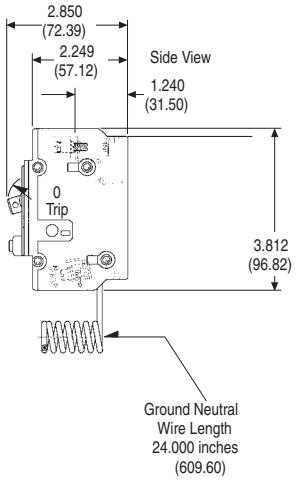

1- , 2-Pole

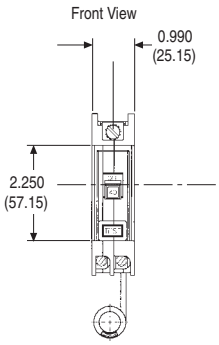

1-Pole

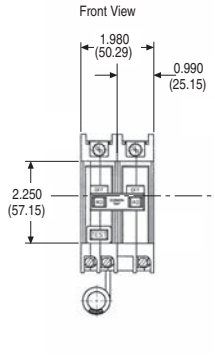

2-Pole

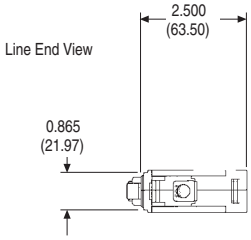

1-Pole

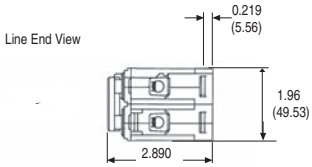

2-Pole

1492-GH/-GS —Supplementary Protectors

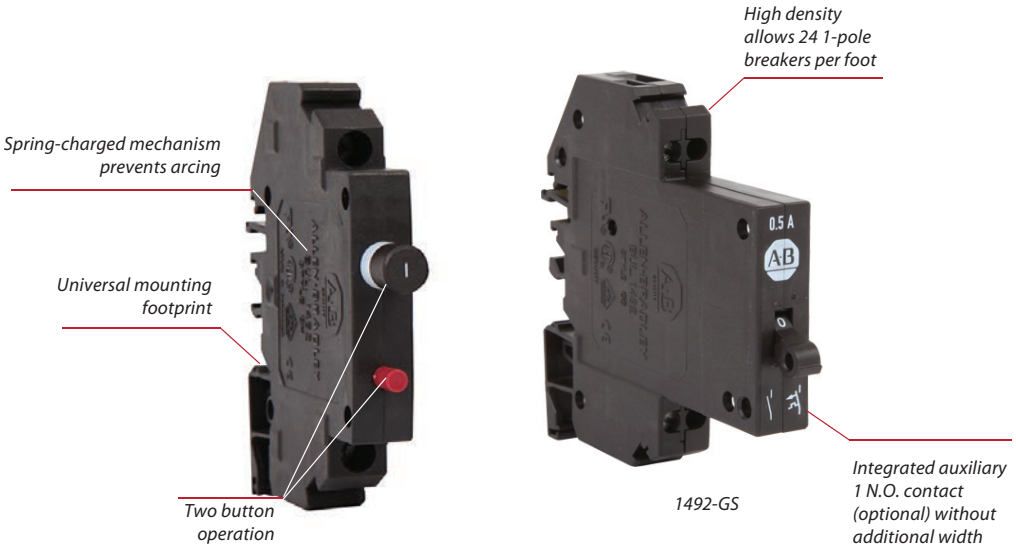

1492-GH

1492-GS

Bulletin 1492-GH/GS high density miniature circuit breakers are thermal magnetic type supplementary protectors. These products are a high-density design often used when panel space (width) is a premium. Up to 24 one-pole breakers can be mounted per foot.

1492-GS/GH Supplementary Protectors		
Rated Voltage	-GH	250V AC 50/60 Hz
	-GS	480Y/277V AC 50/60 Hz
Current Ratings	-GH	0.2...15 A
	-GS	0.2...25 A
Poles	-GH	1
	-GS	1, 2, 3
Standards Compliance		UL 1077
		CSA C22.2 No.235
		EN 60934
Certifications		UL Recognized, File No. E65138
		CSA Certified, File No. 72348
		CE Marked
		VDE Certified
		RoHS Compliant

Features

- Low current ratings and numerous rated currents for precise circuit requirements
- Can be ordered with auxiliary contacts that do not add any additional space
- AC and DC voltage ratings in one convenient device
- A positively trip-free mechanism (breaker operation cannot be defeated by holding the handle in the ON position)
- Superior shock and vibration resistance capabilities; to help prevent nuisance tripping

1492-GH Supplementary Protectors

Bulletin 1492-GS breakers are 1-pole devices. They use a push-to-set mechanism for circuit actuation and come with a manual trip button for manually opening the circuit.

1492-GS Supplementary Protectors

Bulletin 1492-GS breakers are available in 1-, 2-, and 3-pole devices. They use a toggle style handle mechanism for circuit actuation. These breakers may also be ordered with an internally mounted N.O. auxiliary contact that requires no additional mounting space.

Catalog Number Explanation

Note: Examples given in this section are for reference purposes. This basic explanation should not be used for product selection; some combinations may not produce a valid catalog number.

1492 - GH 002

a *b*

a

Poles	
Code	**Description**
GH	1-Pole

b

Rated Current (*I*n)	
Code	**Current [A]**
002	0.2
005	0.5
008	0.8
010	1
012	1.2
015	1.5
020	2
025	2.5
030	3
040	4
050	5
070	7
100	10
150	15

1492 - GS1G 002 - H1

a *b* *c*

a

Poles	
Code	**Description**
GS1G	1-Pole
GS2G	2-Pole
GS3G	3-Pole

b

Rated Current (*I*n)	
Code	**Current [A]**
002	0.2
005	0.5
008	0.8
010	1
012	1.2
015	1.5
020	2
025	2.5
030	3
040	4
050	5
060	6
070	7
080	8
100	10
120	12
150	15
160	16
200	20
250	25

c

Auxiliary Contact	
Code	**Description**
	Can be left blank
H1	With 1 N.O. integrated auxiliary contact (only 1 may be added per device)

Product Selection

	1492-GH	1492-GS		
	1-Pole	1-Pole	2-Pole	3-Pole
Amperage [A]	Cat. No.	Cat. No.	Cat. No.	Cat. No.
0.2	1492-GH002	1492-GS1G002	1492-GS2G002	1492-GS3G002
0.5	1492-GH005	1492-GS1G005	1492-GS2G005	1492-GS3G005
0.8	1492-GH008	1492-GS1G008	1492-GS2G008	1492-GS3G008
1	1492-GH010	1492-GS1G010	1492-GS2G010	1492-GS3G010
1.2	1492-GH012	—	—	—
1.5	1492-GH015	1492-GS1G015	1492-GS2G015	1492-GS3G015
2	1492-GH020	1492-GS1G020	1492-GS2G020	1492-GS3G020
2.5	1492-GH025	1492-GS1G025	1492-GS2G025	1492-GS3G025
3	1492-GH030	1492-GS1G030	1492-GS2G030	1492-GS3G030
4	1492-GH040	1492-GS1G040	1492-GS2G040	1492-GS3G040
5	1492-GH050	1492-GS1G050	1492-GS2G050	1492-GS3G050
6	—	1492-GS1G060	1492-GS2G060	1492-GS3G060
7	1492-GH070	1492-GS1G070	1492-GS2G070	1492-GS3G070
8	—	1492-GS1G080	1492-GS2G080	1492-GS3G080
10	1492-GH100	1492-GS1G100	1492-GS2G100	1492-GS3G100
12	—	1492-GS1G120	1492-GS2G120	1492-GS3G120
15	1492-GH150	1492-GS1G150	1492-GS2G150	1492-GS3G150
16	—	1492-GS1G160	1492-GS2G160	1492-GS3G160
20	—	1492-GS1G200	1492-GS2G200	1492-GS3G200
25	—	1492-GS1G250	1492-GS2G250	1492-GS3G250
Integrated Auxiliary Contact	—	Add suffix — H1 for integrated N.O. auxiliary (only one may be added per device)		

Specifications

	1492-GH	1492-GS		
	1-Pole	1-Pole	2-Pole	3-Pole
UL/CSA	200 A (Not to exceed 100 x rated A)	0.2…16 A	5 kA C1 (2 kA C1 for 65V DC — 1-pole)	
		18…25 A	2 kA C1	
IEC/EN 60934 (CBE)	—	0.2…5 A	400 A	
		6…25 A	800 A	
Maximum voltage ratings	250V AC 50/60 Hz 65V DC	480Y/277V AC 50/60 Hz 65V DC		
Temperature range	-40...+149 °F (-40...+65 °C) non-condensing			
Operating life	6000 operations @ rated current			
Housing material	Glass-filled Polyamide 6.6			
Shock	25 G, 11 ms duration			
Vibration	5 G (10...500 Hz)			
Dielectric strength	1500V AC	1600V AC		
Insulation resistance	100 M Ω @ 500V DC			
Terminal type	Tubular screw with self-lifting box lug			
Wire size	#22...10 AWG			
Recommended wire strip length	0.44 in. (11.2 mm)	Main terminal — 0.51 in. (13 mm) aux terminal — 0.41 in. (10.4 mm)		
Terminal torque	1.3...1.4 N•m (10...12 lb•in)	0.656 N•m (5 lb•in)		
N.O. auxiliary contact rating	—	1.0 A AC or DC (resistive load)		

Approximate Dimensions

Note: Dimensions are shown in inches (mm). Dimensions are not intended for manufacturing purposes.

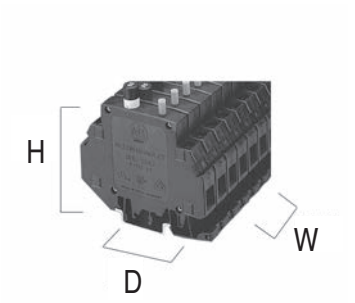

	1492-GH	1492-GS		
	1-Pole	1-Pole	2-Pole	3-Pole
Height	3.15 in. (80 mm)	3.15 in. (80 mm)		
Depth	2.89 in. (73.4 mm)	3.48 in. (88.5 mm)		
Width	0.49 in. (12.4 mm)	0.49 in. (12.5 mm)	0.98 in. (25 mm)	1.47 in. (37.5 mm)

Application Information

UL 1077, CSA C22.2 #235

In North America, miniature circuit breakers are recognized as supplementary protectors and are intended for use as overcurrent protection within an appliance or other electrical equipment where branch circuit protection is already provided or not required. Internationally, these products are rated to IEC standards as circuit breakers for equipment (CBE).

Selection Information

High-density supplementary protector/miniature circuit breaker applications include, but are not limited to, the protection of test equipment, control instrumentation, solenoids, and power supplies. The wide range of current values and the use of a thermal magnetic trip system allows for a variety of applications where a very accurate and compact breaker is required.

To select a miniature circuit breaker, use the following procedure:

1. Determine the inrush correction factor from the following table.

Inrush Ratio Correction Table

Inrush Ratio	1:1 to 1:4	1:5	1:6	1:7	1:8
Factor	1.3	1.4	1.5	1.6	1.7

Note: For resistive loads use an inrush correction factor of 1.0.

2. Determine the temperature correction factor from the following table.

Ambient Temperature Correction Table

Ambient Temperature	70 °F (21.1 °C)	100 °F (37.8 °C)	120 °F (48.9 °C)	140 °F (60 °C)	160 °F (71.1 °C)	180 °F (82.2 °C)	200 °F (93.3 °C)
Factor	1.0	1.1	1.2	1.3	1.4	1.5	1.6

3. Determine the sealed current of the load being protected.

4. Multiply the sealed current by the two correction factors and select the closest higher ampere rating.

Example — For a solenoid with sealed current of 0.5 A, an inrush ratio of 1:8, and an ambient temperature of +110 °F, (0.5 x 1.7 x 1.15 = 0.9775), select the 1.0 A miniature circuit breaker. Tripping time of the miniature circuit breaker is determined from the table below. Divide the miniature circuit breaker value by the temperature correction factor from the Ambient Temperature Correction Table to determine the actual rated current referenced in the table below.

Tripping Times in Seconds at 70 °F (21.1 °C)

Percent Rated Current	100%	200%	300%	400%	500%	600%	1000%	2000% Greater
Tripping Times (Seconds)	No Trip	10…40	3…18	1.5…9	0.8…6	0.003 …4	0.009 …2	Max. 0.02

Note: When several breakers are rail mounted adjacent to each other, the no-trip current will be 80% of rated current at 70 °F (21.1 °C).

Using selection tables, select Bulletin 1492-GH/GS that allows full load current nearest without exceeding application current. Also, check that inrush current is less than trip range of 6…10 *I*n.

Tripping Characteristics

Time Current Curve –1492-GH

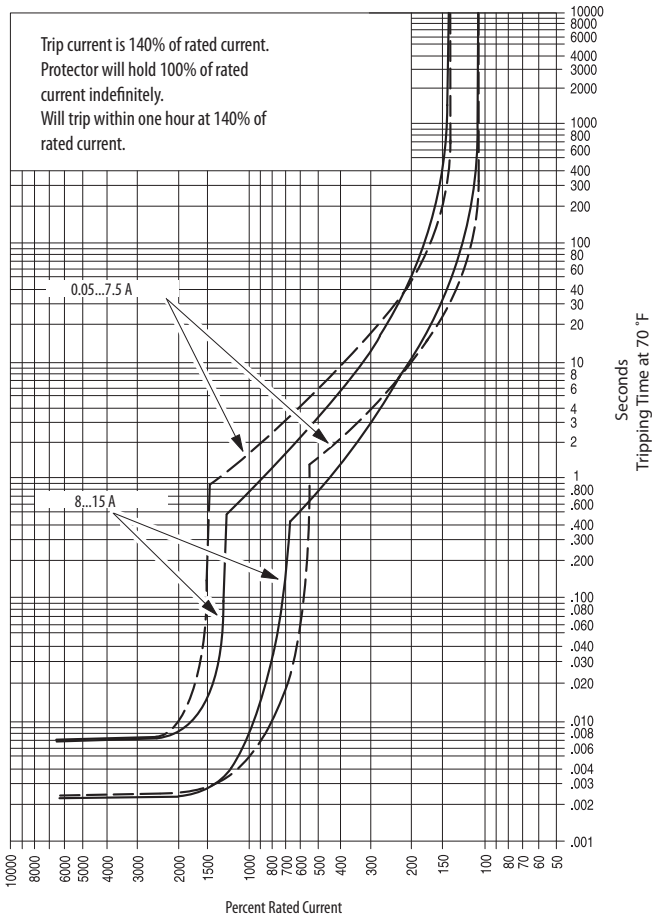

Time Current Curve –1492-GS

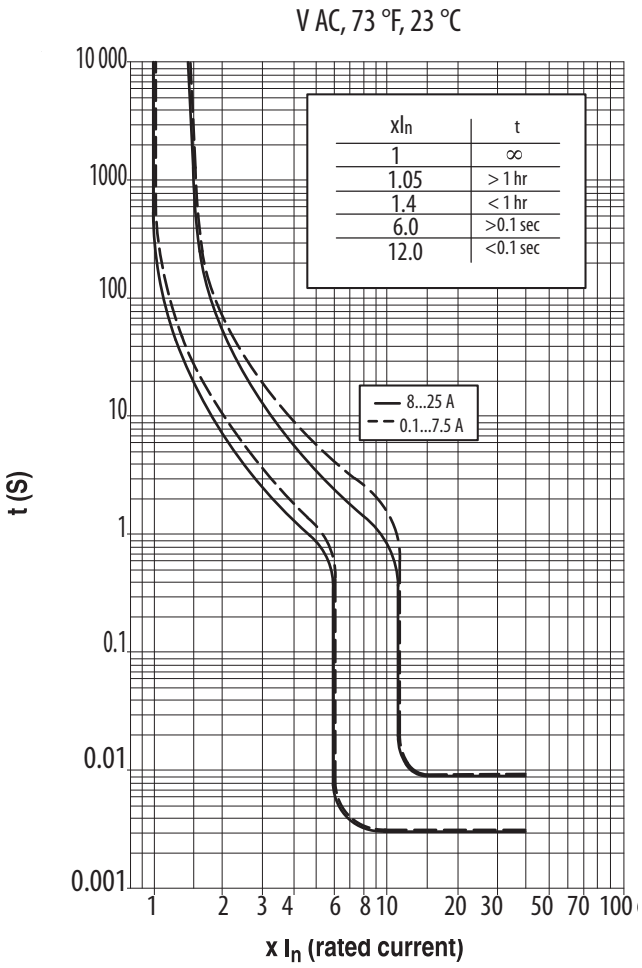

Note: When several breakers are rail mounted adjacent to each other, the no-trip current will be 80% of rated current at 70 °F (21.1 °C).

1492-FB Fuse Holders

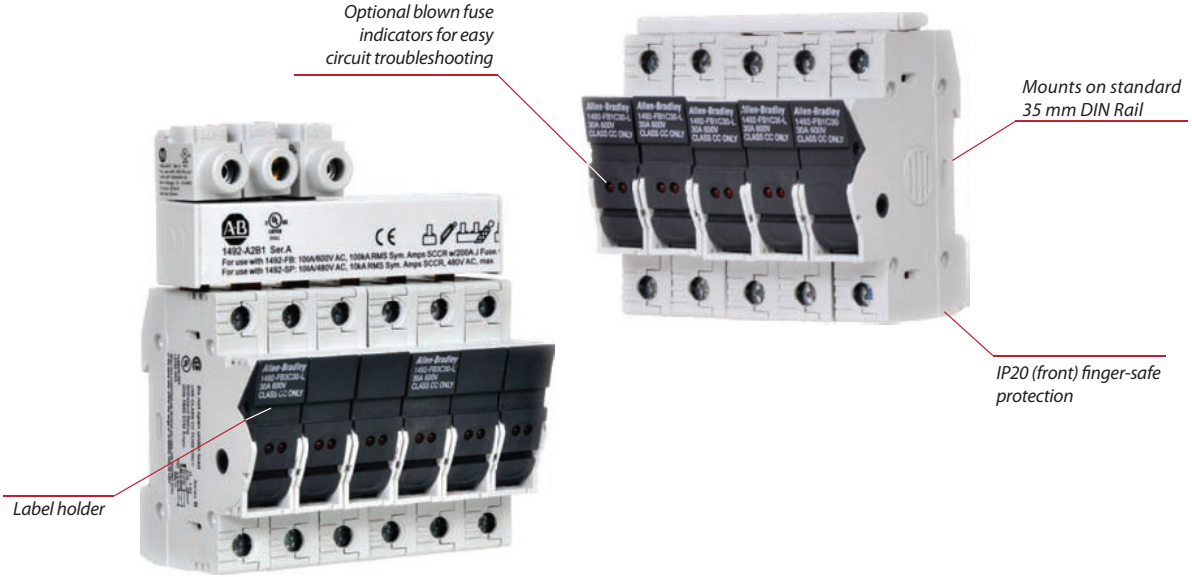

The 1492-FB fuse holder family is designed for use in many OEM applications, such as power supplies, equipment protection, primary and secondary control transformers, solenoids, lighting and heater loads, and drives.

Bulletin 1492-FB fuse holders provide a safe and convenient means for installation of Class CC, J, and Midget fuses. To support correct fuse type installation, the Class CC fuse holder is designed to reject a Midget fuse or international 10 x 38 mm fuse. The Class J fuse holder will reject all fuses other than a Class J fuse.

All Allen-Bradley Class CC, J, and Midget fuse holders are UL Listed and CSA Certified for branch circuit protection. They are excellent for wire protection, small motor loads, and group protection of small motor loads. The Midget fuse holder is also CE Marked for 10 x 38 mm IEC Midget fuses.

Features

- Compact size requires less panel space than open-style fuse holders
- Handle isolates the fuse from top-wired power when installing or removing fuse
- Terminals are shipped in open position and ready for wiring
- Suitable for use in field wiring applications

1492-FB Fuse Holders		
Poles	1, 2, 3	
Fuse Types	Midget 30 A Class CC 30 A Class J 30 A Class J 60 A	
Standards Compliance	Midget	UL 4248-1 CSA 22.2 No. 39 EN 60947-1 & 3
	Class CC	UL 4248-4 CSA 22.2 No. 39
	Class J	UL 4248-8 CSA 22.2 No. 39
Certifications	UL Listed, File No. E34648 CSA Certified, File No. 71101 CE Marked RoHS Compliant	

Catalog Number Explanation

Note: Examples given in this section are for reference purposes. This basic explanation should not be used for product selection; some combinations may not produce a valid catalog number.

1492	-	FB1	C30	-	L
		a	*b*		*c*

a

Poles	
Code	**Description**
FB1	1-Pole
FB2	2-Pole
FB3	3-Pole

b

Fuse Type	
Code	**Description**
M30	Midget Type 30 Amp
C30	C Class 30 Amp
J30 *	J Class 30 Amp
J60 *	J Class 60 Amp

c

With Indication	
Code	**Description**
	Can be left blank
L	With indication 110...600V AC/DC
D1	With indication 12...72V AC/DC

* Bus bars do not fit on Class J fuse holders.

Product Selection

Description		For Midget Fuse	For Class CC Fuse	For Class J Fuse *	
		30 A	30 A★	30 A	60 A
		Cat. No.	Cat. No.	Cat. No.	Cat. No.
1-Pole	Fuse Block	1492-FB1M30	1492-FB1C30	1492-FB1J30	1492-FB1J60
	Fuse Block with Indication, 110...600V ‡	1492-FB1M30-L	1492-FB1C30-L	1492-FB1J30-L	1492-FB1J60-L
	Fuse Block with Indication, 12...72V	1492-FB1M30-D1	1492-FB1C30-D1	—	—
	Pieces per Carton	12	12	6	6
2-Pole	Fuse Block	1492-FB2M30	1492-FB2C30	1492-FB2J30	1492-FB2J60
	Fuse Block with Indication, 110...600V ‡	1492-FB2M30-L	1492-FB2C30-L	1492-FB2J30-L	1492-FB2J60-L
	Pieces per Carton	6	6	3	3
3-Pole	Fuse Block	1492-FB3M30	1492-FB3C30	1492-FB3J30	1492-FB3J60
	Fuse Block with Indication, 110...600V ‡	1492-FB3M30-L	1492-FB3C30-L	1492-FB3J30-L	1492-FB3J60-L
	Pieces per Carton	4	4	2	2

★ All major fuse brands and current ranges have been evaluated for this fuse holder. Due to the heat they generate, the following fuses must be derated:
Mersen ATQR 1.25 / = 0.42 A max.
Mersen ATQR 1.40 / = 0.47 A max.

‡ 690V when used in IEC applications.

* Bus bars do not fit on Class J fuse holders.

Accessories

Description	Size	Pkg. Quantity	Cat. No.
Fuseholder Identification Slide-in Markers (blank marker squares slip into molded slot.100 markers/card)	5 mm x 5 mm	5 cards	1492-MC5X5
	6 mm x 5 mm		1492-MC6X5

Specifications

Product Type (*n* = number of poles)		M	CC	J30 *	J60 *
		1492-FB*n*M30 "B" 1492-FB1M30-D1 "B" 1492-FB*n*M30-L "B"	1492-FB*n*C30 "B" 1492-FB1C30-D1 "B" 1492-FB*n*C30-L "B"	1492-FB*n*J30 "B" 1492-FB*n*J30-L "B"	1492-FB*n*J60 "B" 1492-FB*n*J60-L "B"
For Fuse Type:		Midget 13/32" x 1-1/2" (10 x 38 mm)	Class CC	Class J	
Maximum voltage AC/DC		600V, 690V(IEC)	600V	600V	
Maximum current		30 A, 32 A (IEC)	30 A	30 A	60 A
Maximum current withstand (UL/CSA)		Fuse dependent 50 kA max UL	200 kA sym	200 kA sym	
Operating temperature range		-4...+130 °F, -20...+55 °C			
Conductor material		Copper, stranded			
Conductor strip length		0.43 in. (11 mm)		0.79 in. (20 mm)	
Conductor range	1 wire per terminal	#18...4 AWG (0.75...25 mm^2)		#18...1 AWG (0.75...50 mm^2)	#14...1 AWG (2.5...50 mm^2)
	2 wires★ per terminal	#18...8 AWG (0.75...10 mm^2)		#18...6 AWG (0.75...16 mm^2)	#14...6 AWG (2.5...16 mm^2)
Terminal tightening torque		#18...8 AWG: 22 lb•in #6...4 AWG: 26 lb•in 0.75...25 mm^2: 2.5 N•m		35 lb•in (4 N•m)	

★ Both wires must be same size

* Bus bars do not fit on Class J fuse holders.

Approximate Dimensions

Note: Dimensions are shown in inches (mm). Dimensions are not intended for manufacturing purposes.

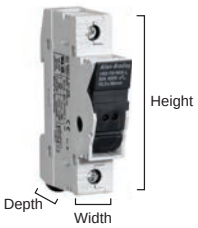

Dimension		For Midget Fuse	For Class CC Fuse	For Class J Fuse	
		30 A	30 A	30 A	60 A
Height		3.19 in. (81 mm)	3.19 in. (81 mm)	4.65 in. (118 mm)	4.65 in. (118 mm)
Depth		2.51 in. (64 mm)	2.51 in. (64 mm)	2.76 in. (70 mm)	3.23 in. (82 mm)
Width	1-Pole	0.71 in. (18 mm)	0.71 in. (18 mm)	1.41 in. (36 mm)	1.57 in. (40 mm)
	2-Pole	1.41 in. (36 mm)	1.41 in. (36 mm)	2.83 in. (72 mm)	3.15 in. (80 mm)
	3-Pole	2.13 in. (54 mm)	2.13 in. (54 mm)	4.25 in. (108 mm)	4.72 in. (120 mm)

Bus Bars

1492-FB Bus Bars*

Description	Pins	Rated Current [A] ‡	Pkg. Qty.	Cat. No. ★
1-Phase	57	100 A	1	1492-A1B1
	57	80 A	1	1492-A1B8
2-Phase	56	100 A	1	1492-A2B1
	56	80 A	1	1492-A2B8
3-Phase	57	100 A	1	1492-A3B1
	57	80 A	1	1492-A3B8

★ cULus, UL508, EN 60947-1, CE Marked

‡ Refer to the diagrams below for Feeder Terminal & Bus Bar Current Distribution

* Bus bars do not fit on Class J fuse holders.

1492-FB Bus Bar Accessories

Description	Pkg. Qty.	Cat. No. ★
Terminal Power Feed, 35 mm², for 1-phase bus bar	10	1492-AAT1LP
Terminal Power Feed, 35 mm², for 2- or 3-phase bus bar	10	1492-AAT1
Dedicated Power Feed, 50 mm²	10	1492-AAT2
End Cover for 1-phase bus bar	10	1492-A1E
End Cover for 2- or 3-phase bus bar	10	1492-AME
Protective Shroud for unused pins	10	1492-AAP

★ cULus, UL508, EN 60947-1, CE Marked

Feeder Terminal & Bus Bar Current Distribution

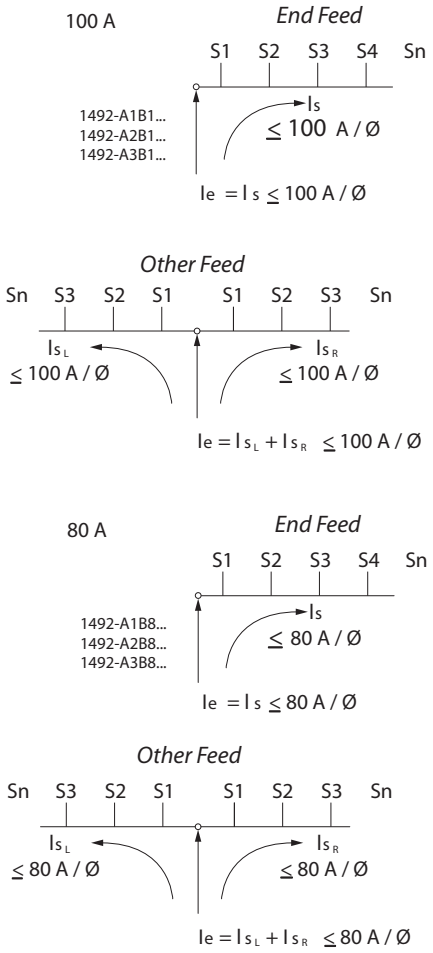

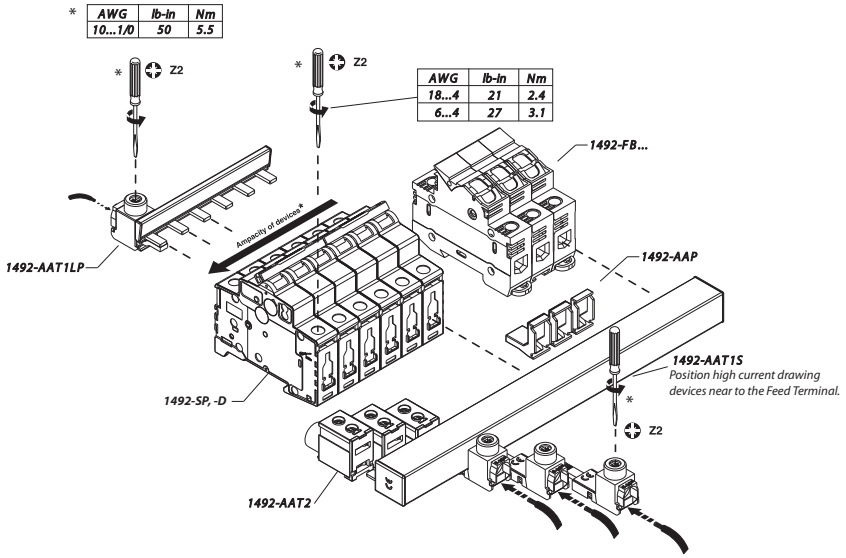

Bus Bar Approximate Dimensions

Note: Dimensions are shown in millimeters (inches). Dimensions are not intended for manufacturing purposes.

1-Phase Bus Bars

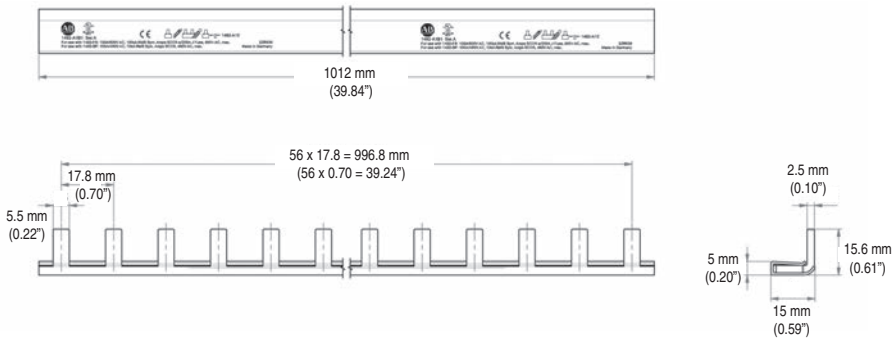

1492-A1B1

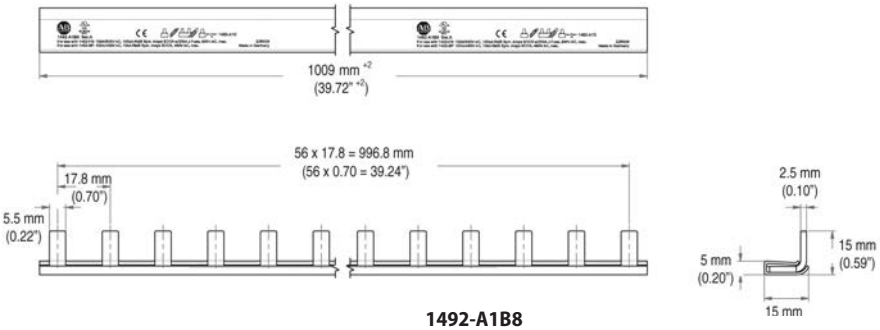

1492-A1B8

2-Phase Bus Bars

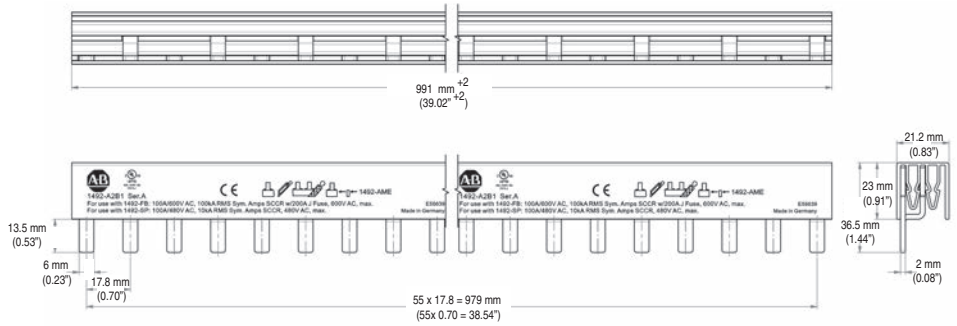

1492-A2B1

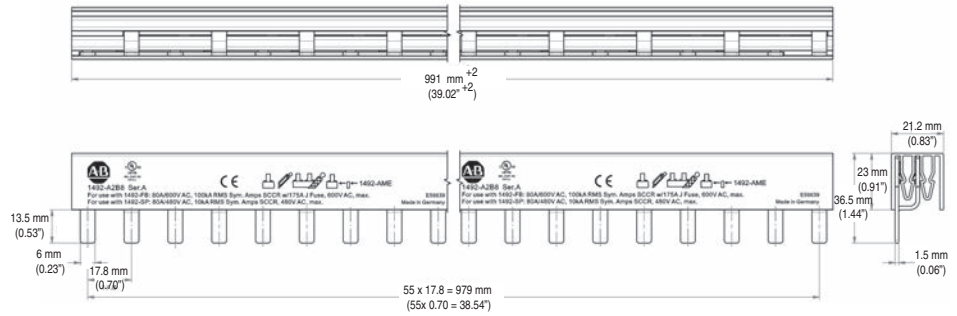

1492-A2B8

Bus Bar Approximate Dimensions

Note: Dimensions are shown in millimeters. Dimensions are not intended for manufacturing purposes.

3-Phase Bus Bars

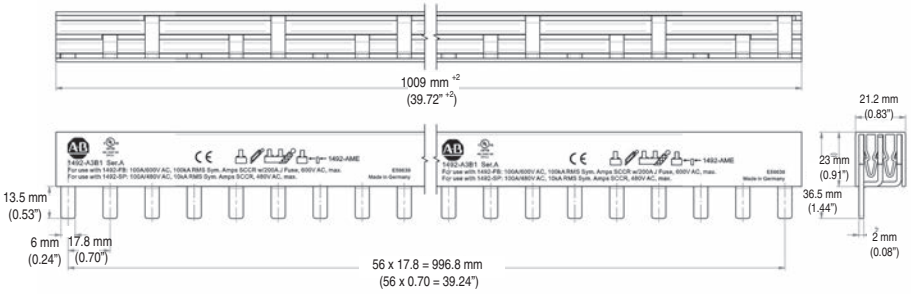

1492-A3B1

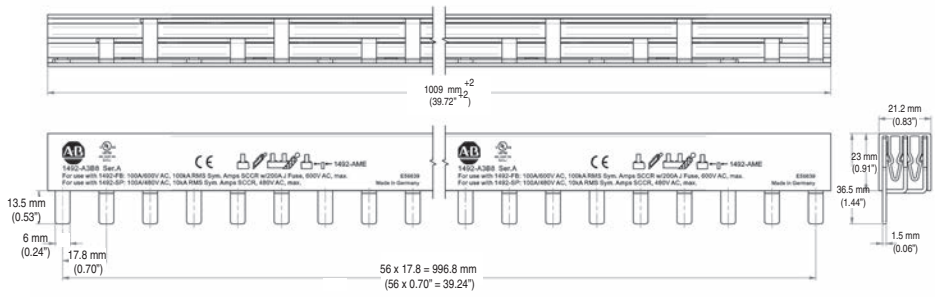

1492-A3B8

Bus Bar Accessory Approximate Dimensions

Note: Dimensions are shown in millimeters. Dimensions are not intended for manufacturing purposes.

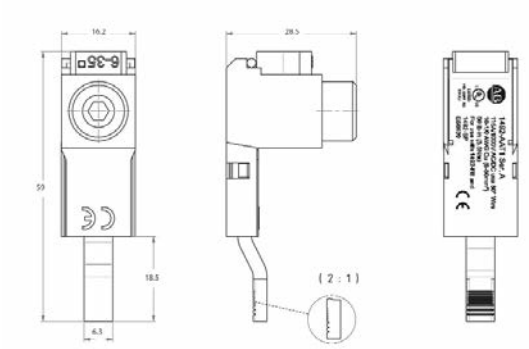

1492-AAT1

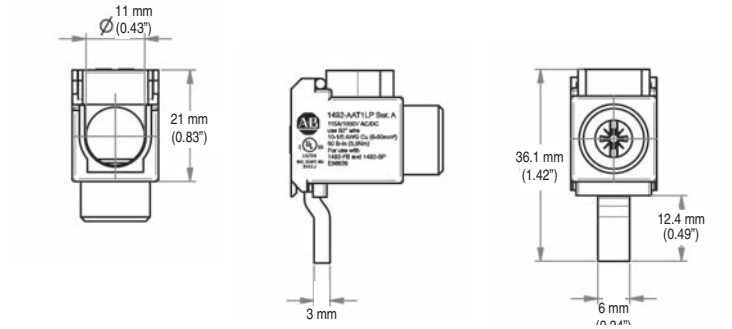

1492-AAT1LP

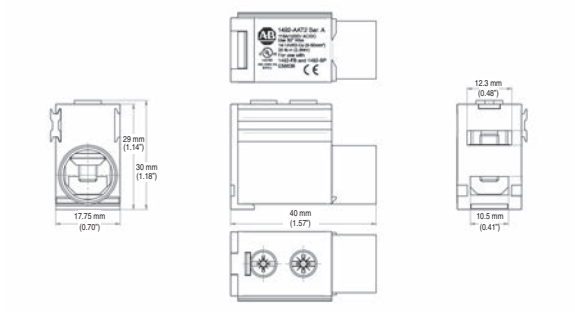

1492-AAT2

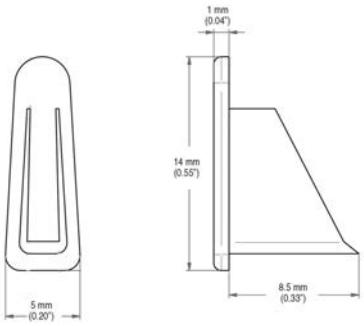

1492-A1E

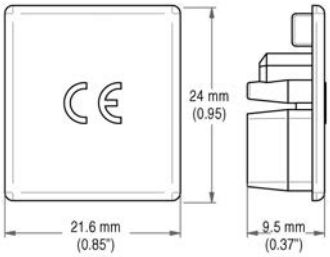

1492-AME

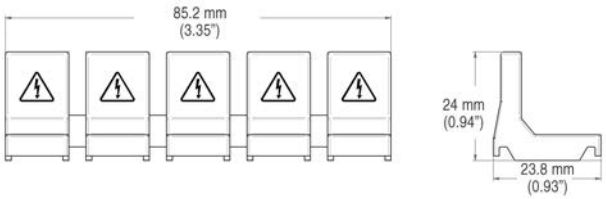

1492-AAP

Rockwell Automation Support

Use the following resources to access support information.

Technical Support Center	Knowledgebase Articles, How-to Videos, FAQs, Chat, User Forums, and Product Notification Updates.	www.rockwellautomation.com/knowledgebase
Local Technical Support Phone Numbers	Locate the phone number for your country.	www.rockwellautomation.com/global/support/get-support-now.page
Direct Dial Codes	Find the Direct Dial Code for your product. Use the code to route your call directly to a technical support engineer.	www.rockwellautomation.com/global/support/direct-dial.page
Literature Library	Installation Instructions, Manuals, Brochures, and Technical Data.	www.rockwellautomation.com/literature
Product Compatibility and Download Center (PCDC)	Get help determining how products interact, check features and capabilities, and find associated firmware.	www.rockwellautomation.com/global/support/pcdc.page

Documentation Feedback

Your comments will help us serve your documentation needs better. If you have any suggestions on how to improve this document, complete the How Are We Doing? form at http://literature.rockwellautomation.com/idc/groups/literature/documents/du/ra-du002_-en-e.pdf.

Rockwell Automation maintains current product environmental information on its website at http://www.rockwellautomation.com/rockwellautomation/about-us/sustainability-ethics/product-environmental-compliance.page.

Allen-Bradley, Rockwell Software, Rockwell Automation, and LISTEN. THINK. SOLVE are trademarks of Rockwell Automation, Inc.
Trademarks not belonging to Rockwell Automation are property of their respective companies.

www.rockwellautomation.com

Power, Control and Information Solutions Headquarters

Americas: Rockwell Automation, 1201 South Second Street, Milwaukee, WI 53204-2496 USA, Tel: (1) 414.382.2000, Fax: (1) 414.382.4444
Europe/Middle East/Africa: Rockwell Automation NV, Pegasus Park, De Kleetlaan 12a, 1831 Diegem, Belgium, Tel: (32) 2 663 0600, Fax: (32) 2 663 0640
Asia Pacific: Rockwell Automation, Level 14, Core F, Cyberport 3, 100 Cyberport Road, Hong Kong, Tel: (852) 2887 4788, Fax: (852) 2508 1846

Publication 1492-SG122I-EN-P - February 2018
Supersedes Publication 1492-SG122H-EN-P - November 2015

Copyright © 2018 Rockwell Automation, Inc. All rights reserved. Printed in the U.S.A.