Pico and Pico GFX-70 Programmable Controllers Selection Guide

1760

Rockwell Automation

Pico Overview

Small, Simple, and Flexible

The Allen-Bradley Pico controller performs simple logic, timing, counting, and real-time clock operations. For enhanced functionality and performance, the Pico GFX controller adds the use of a graphic display while offering advanced programming features like PID control, a high-speed counter, and Boolean sequences. Splitting the difference between a timing relay and a low-end programmable controller, the Pico controllers are ideal for relay replacement applications where simple control applications such as building, HVAC, and parking lot lighting, and applications in which cost is a primary design issue. The Pico controllers were designed with ease-of-use in mind. All programming and data adjustments can be done via the on-board keypad and display, or with Allen-Bradley PicoSoft and PicoSoft Pro configuration software.

Pico Components

The basic Pico components include Pico controllers and Pico expansion I/O modules. The Pico expansion I/O modules can be used with Pico EX and Pico GFX-70 controllers to increase your I/O capacity.

You can add one Pico expansion I/O module for each controller in your system. Mixing I/O types is also possible by combining an AC controller with a DC expansion module.

Pico Controllers

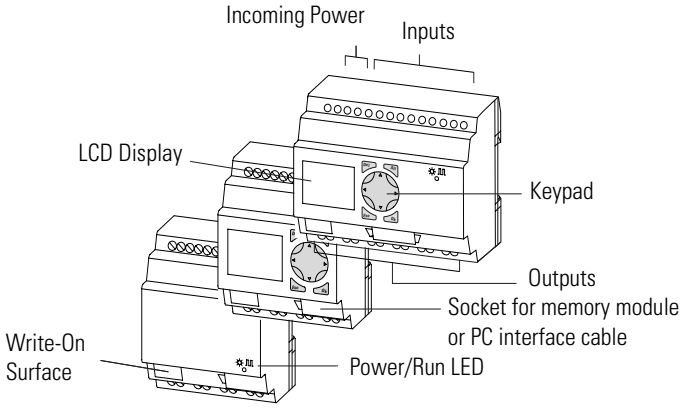

Pico Expansion I/O Modules

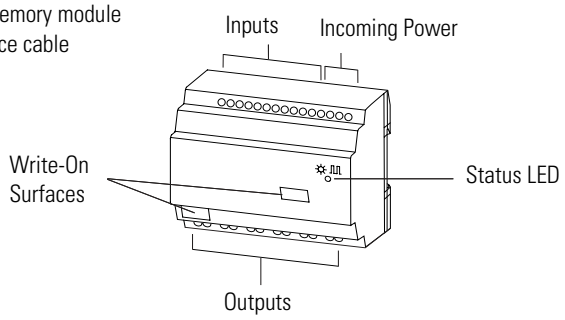

Pico GFX-70 Components and Connections

With its multi-function display, the Pico GFX-70 controller adds more flexibility and capability to the Pico family of Allen-Bradley controllers. It displays text, date, time, and even your own custom bitmaps. These graphics can be used as operator interface, or linked to control operations to provide real-time feedback. This controller offers an attractive and practical design with an IP65 display on the outside of your panel, and the controller and I/O conveniently housed within the panel. The 70 mm graphic display is backlit for readability. Even the keypad buttons are illuminated for use in low light conditions. The controller may also be attached to a DIN rail when the display unit is not required.

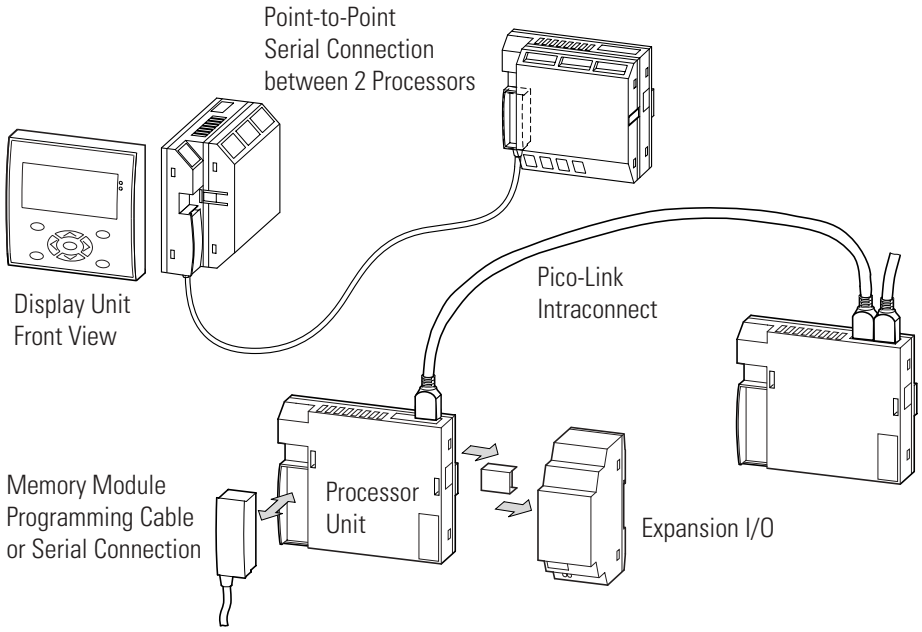

Pico Remote Processor

The remote processor is used for terminal mode operation of Pico controllers and I/O modules.

Use the remote mounting processor with Pico controllers, Pico expansion I/O, and Pico GFX-70 controllers. Perform text messaging and make data adjustments using the display/keypad unit.

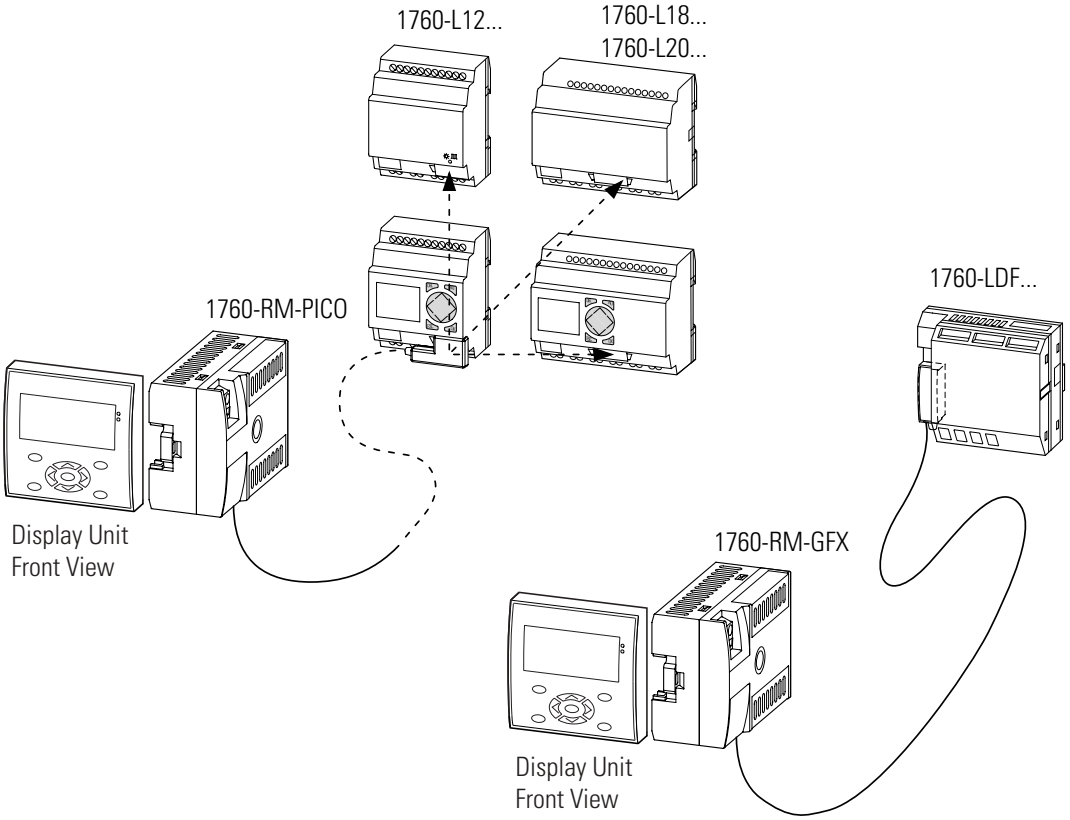

IMPORTANT The 1760-RM-GFX remote processor only provides text messaging capabilities. To use the full graphics functionality, you must use the point-to-point serial connection or the Pico-Link intraconnect between two Pico GFX-70 processors as shown on page 4.

Specifying a Pico Controller System

Follow these steps as you specify your Pico Controller system.

Step	Description	Page
1.	Select Pico or Pico GFX-70 Control	6
2.	Select Keypad Programming or Programming Software	8
3.	Select Communications	10
4.	Select Pico Controllers, I/O and Accessories	14
5.	Select Pico GFX-70 Controllers, I/O, and Accessories	16
6.	Specifications	21
7.	Fill in the Selection Worksheet	33

Select Pico or Pico GFX-70 Control

Review the features shown in the following table to decide which level of Pico control is right for you.

	Pico Control	Pico GFX-70 Control
Operating Power		
120/240V ac	✔	✔
24V dc	✔	✔
12V dc	✔	
HMI		
LCD display	✔	✔
Text display feature	✔	✔
Text display screens, Max	8	255
Lines of text per display screen, Max	4	4
Text length, Max	16 characters	Standard type size: 16 characters Double type size: 8 characters 7-Segment display: 4 characters
Display languages	12	10
Keypad	✔	✔
Freely definable keys		5 (31 functions per key), Max
Graphics display feature		✔
Graphics display capacity, Max		24 KB (255 screens and 255 elements per screen, Max)
Integrated status LED indicators	1	2
I/O		
Embedded I/O, Max.	20	16
I/O count with expansion module, Max	40	36
Remote expansion	using 1760-RM-PICO	using 1760-RM-GFX
I/O count with Pico-Link, Max		272
Digital Input Types	120V ac 24V dc 12V dc 24V ac or 24V dc	120V ac 24V dc
Digital output types	24V transistor, relay	24V dc transistor, relay
Analog input types	0...10V	0...10V
Analog output types		0...10V
Real Time Clock	✔	✔
DeviceNet	✔	✔

	Pico Control	Pico GFX-70 Control
Programming		
Keypad	✔	
Pre-programmed memory module	✔	✔
Picosoft software	✔	
Picosoft pro software	✔	✔
Programming rungs, Max	128	256
Pico-Link		
Number of Pico-link stations		8
Pico-link communication rate		10 KBits/s to 1000 KBits/s
Pico-link length, Max		1000 m (3280 ft)
Pico-link data transfer, Max		32 double words
Function Blocks		
Timer	✔	✔
Counter	✔	✔
Analog comparator	✔	✔
Operating hours counter	✔	✔
7-Day time switch	✔	✔
Year time switch	✔	✔
Text display	✔	✔
Master reset	✔	✔
Frequency counter	✔	✔
High-speed counter	✔	✔
Comparator	✔	✔
Set cycle time	✔	✔
Arithmetic function		✔
Block functions		✔
Boolean operation		✔
High-speed incremental encoder		✔
PID controller		✔
Signal smoothing filter		✔
GET/PUT Pico-link value		✔
Synchronize clock via Pico-link		✔
Value scaling		✔
Numerical converters		✔
Pulse width modulation (PWM)		✔
Value limitation		✔
Certifications		
Degree of protection	IP20	Display: IP65, NEMA 4X, Processor: IP20
CE	✔	✔
UL, CSA	✔	✔
Class I, Division 2 Hazardous Location	✔	✔
Operating Temperature Range		
Controller temperature range	-25…55 °C (-13…131 °F)	-25…55 °C (-13…131 °F)
Display temperature range	n/a	-5…55 °C (23…131 °F)
Storage/transport temperature range	-40…70 °C (-40…158 °F)	-40…70 °C (-40…158 °F)

Select Keypad Programming or Programming Software

Pico controllers, with on-board keypad and LCD display, can be programmed from the front keypad. Models without the keypad and LCD display are programmed by using PicoSoft Pro programming software or by installing a pre-programmed memory module.

Use the Keypad

The keypad is an option on the display unit which is shown on page 17.

Each program rung may contain three input instructions and one output instruction. The instruction set includes:

- Input instructions - examine-on and examine-off.
- Output instructions - output enable (OTE), set (latch), reset (unlatch), and flip-flop (alternating on/off).
- Timer instructions - on-delay, off-delay, single pulse, flashing.
- Counter instructions-count up, count down.
- Real-time Clock instructions - turn on or off based on time-of-day and day-of-week (models with real-time-clock only).
- Analog Compare instructions - greater than or less than a set point or each other.
- Text Display instructions - display messages, timers, and counters on the LCD display.

PicoSoft Pro Software

PicoSoft Pro software includes all the features you need to:

- create a project.
- wire up a circuit diagram.
- test a circuit diagram.
- transfer it.
- print it out.

The PicoSoft Pro application is a complete package. It enables you to create the control software, assign parameters to the function blocks used, configure the visualization interface (including customizing the look with your own *.bmp graphic files), use all screens and button functions, and configure the entire project including the multi-processor systems.

The software also includes functions for simulating the control program, documenting the project, and for establishing communication between the PC and the controller.

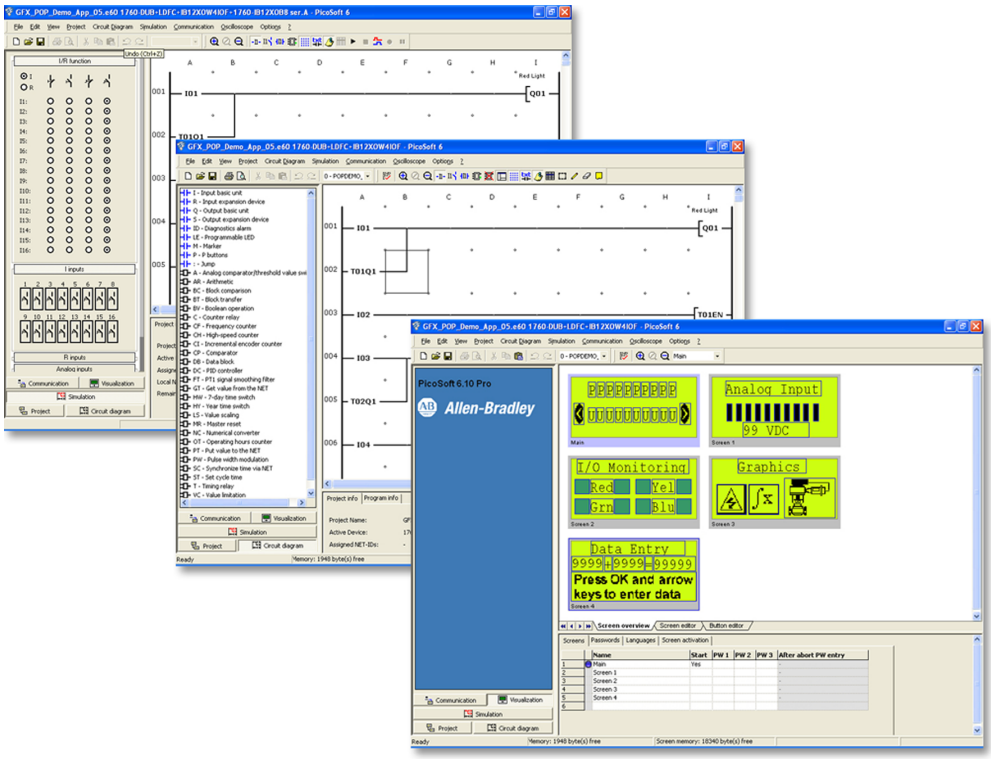

Table 1 Programming Software Selection

Catalog Number	Description
1760-PICOSOFTPRO	PicoSoft Pro programming software
1760-CBL-PC02	Programming cable, PC to processor
1760-PICOPRO-PC02	PicoSoft Pro Software and cable kit (includes 1760-PICOSOFTPRO and 1760-CBL-PC02)

Software Compatibility

If you are using programming software to program the Pico controller, be sure that you are using the correct software version.

IMPORTANT PicoSoft version 6.1 or later must be used to for the Series B Pico controller. Earlier versions of PicoSoft software can only be used with Series A Pico controllers.

Select Communications

The Pico controller supports 2 connection methods.

- Point-to-point serial interface with remote processor, 1760-RM-PICO
- DeviceNet communications module

The Pico GFX-70 supports 3 connection methods.

- Pico-Link
- Point-to-point serial connection between two processors (also point-to-point serial interface with remote processor, 1760-RM-GFX)
- DeviceNet communications module

The Pico-Link intraconnect can be used to connect up to 8 processors. Each processor is considered a Pico-Link station, and they can share all visualization and I/O data.

The serial interface allows connection between two processors. One processor could be located for operator access to a keypad and display to share data with a second processor located behind a panel.

Both connections support 3 modes of operation.

- Run mode/Stop mode
- Card mode (processor starts up using the program stored on the installed memory module)
- Terminal mode

  This allows you to remotely control other devices. This is especially useful if the other device is located in an inaccessible place. Terminal mode can also be used to show the menus and displays of devices that do not have their own display or keypad. Terminal mode can be used both with the serial interface and in the Pico-Link network. The serial interface enables you to access a remote device. If you use the Pico-Link network, all other network stations can be addressed.

IMPORTANT Terminal mode is a separate operating mode like RUN mode. It only functions when a program is not running. For this mode to be active, the GFX controller must be in STOP mode. All connected devices must also support Terminal mode.

Pico-Link with GFX-70 Devices

This topology allows:

- processing of additional inputs and outputs.
- faster and improved control using decentralized programs.
- synchronize date and time.
- read and write inputs and outputs.
- send values to other stations.
- receive values from other stations.
- load a program to or from another station.
- high level of real-time capability.

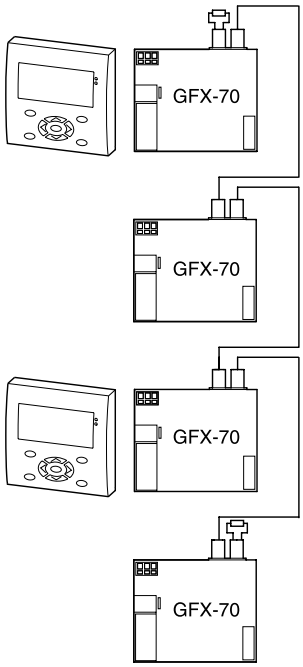

Pico-Link Operation and Serial Interface Connections

This topology is a combination of Pico-Link operation and serial interface operation. The access rights of the individual Pico-Link devices and in the corresponding point-to-point serial interface.

The same conditions apply as with serial operation without the Pico-Link. The following data access operations are possible from the active station to the remote station.

- Local inputs and outputs
- Pico-Link diagnostics bits
- Write/read accesses to markers

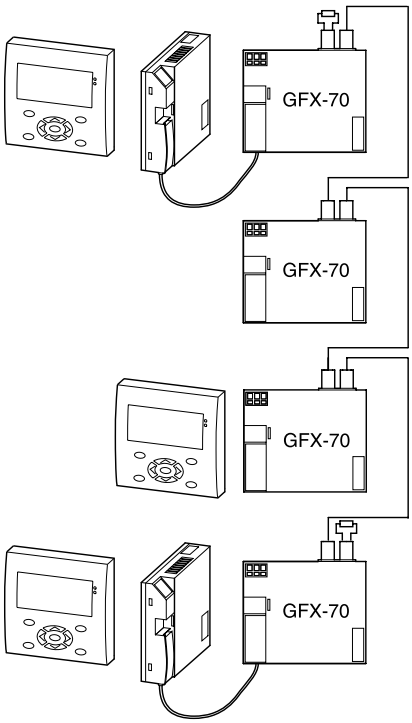

Terminal Mode Using the Point-to-Point Serial Interface

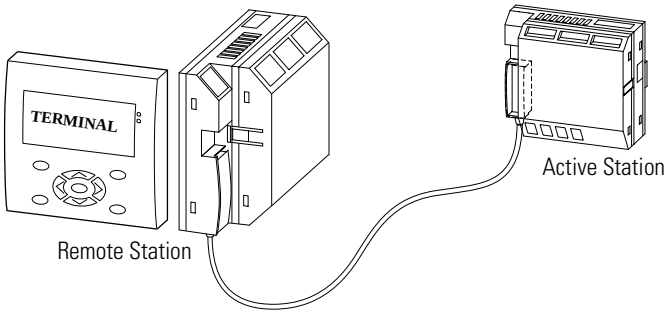

This interface connection allows the reading of input/output states as well as the reading and writing of marker ranges. This data can be used for setpoint entry or for display functions. The stations have different functions. The active station controls the point-to-point connection. The remote station responds to the requests of the active station.

Terminal Mode using the Pico-Link Topology

Terminal mode allows the active station to control any processor within the Pico-Link.

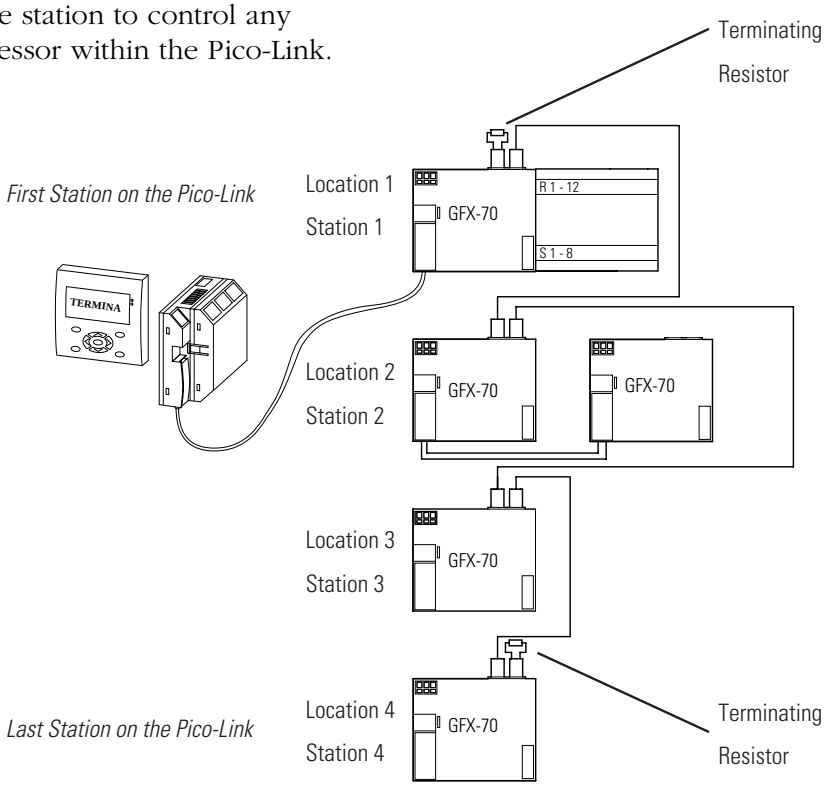

DeviceNet Communications Module

The Pico DeviceNet module, 1760-DNET, allows you to have a Pico controller operate as a slave device on the DeviceNet network.

The DeviceNet module connects to the Pico controller like an expansion I/O module. It can be used with the Pico 18- and 20-point controllers and the Pico GFX-70 controller. 24V dc power must be provided to the device.

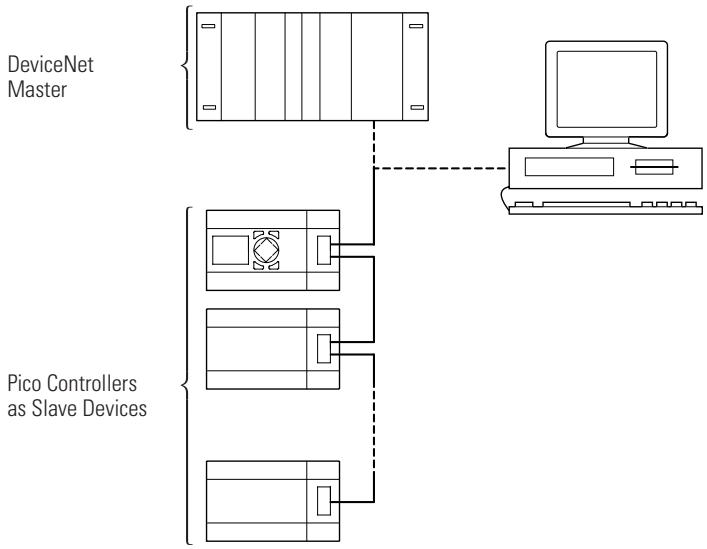

The DeviceNet module is equipped with Network and Module status LEDs. It uses the following communication profile.

- Predefined master/slave communication settings
  - The I/O polling connection is used for the transfer of 3 bytes of input data (R1 to R16) and 3 bytes of output data (S1 to S8) between the Pico controller and the DeviceNet master.
  - The I/O Change of State/Cyclic connection (acknowledged, unacknowledged) is used to transfer 2 bytes of diagnostic data from the Pico controller to the DeviceNet master.
  - The explicit connection set-up is used for read/write access to function relay parameters in the Pico controller. This type of connection set-up also supports the configuration, diagnostics and management services.
- DeviceNet Communication adapter profile (device type 12)
- Group 2 server
- UCMM-capable device
- Dynamic set-up of explicit and I/O connections are possible
- Device Heartbeat Message
- Device Shutdown Message
- Offline communication settings

Select Pico Controllers, I/O and Accessories

Pico Controllers

Select Pico controllers for up to 20 I/O points. Add a Pico expansion I/O module for up to 40 I/O points.

Table 2 Pico Controllers Selection

Cat. No.	Line Power	Input Voltage Category	Number of Inputs (Digital)	Number of Outputs	Analog	Pico Variation
1760-L12AWA	120/240V ac	120/240V ac	8	4 (relay)	No	
1760-L12AWA-NC	120/240V ac	120/240V ac	8	4 (relay)		no real-time clock
1760-L12AWA-ND	120/240V ac	120/240V ac	8	4 (relay)		no display
1760-L18AWA	120/240V ac	120/240V ac	12	6 (relay)		
1760-L18AWA-EX	120/240V ac	120/240V ac	12	6 (relay)		I/O expandable
1760-L18AWA-EXND	120/240V ac	120/240V ac	12	6 (relay)		I/O expandable, no display
1760-L12NWN	24V ac	24V ac or 24V dc	8	4 (relay)	2 (0...0V dc)	
1760-L12NWN-ND	24V ac	24V ac or 24V dc	8	4 (relay)		no display
1760-L18NWN-EX	24V ac	24V ac or 24V dc	12	6 (relay)	4 (0...10V dc)	I/O expandable
1760-L18NWN-EXND	24V ac	24V ac or 24V dc	12	6 (relay)		I/O expandable, no display
1760-L12DWD	12V dc	12V dc	8[1]	4 (relay)	2 (0...10V dc)	
1760-L12DWD-ND	12V dc	12V dc	8[1]	4 (relay)		no display
1760-L18DWD-EX	12V dc	12V dc	12[1]	6 (relay)	4 (0...10V dc)	I/O expandable
1760-L18DWD-EXND	12V dc	12V dc	12[1]	6 (relay)		I/O expandable, no display
1760-L12BBB	24V dc	24V dc	8[1]	4 (transistor)	2 (0...10V dc)	
1760-L12BBB-ND	24V dc	24V dc	8[1]	4 (transistor)		no display
1760-L12BWB	24V dc	24V dc	8[1]	4 (relay)		
1760-L12BWB-NC	24V dc	24V dc	8[1]	4 (relay)		no real-time clock
1760-L12BWB-ND	24V dc	24V dc	8[1]	4 (relay)		no display
1760-L18BWB-EX	24V dc	24V dc	12[1]	6 (relay)		I/O expandable
1760-L18BWB-EXND	24V dc	24V dc	12[1]	6 (relay)		I/O expandable, no display
1760-L20BBB-EX	24V dc	24V dc	12[1]	8 (transistor)	4 (0...10V dc)	I/O expandable
1760-L20BBB-EXND	24V dc	24V dc	12[1]	8 (transistor)		I/O expandable, no display

(1) Two of the digital dc inputs can alternately be used as 0...10V dc analog inputs. These inputs can be used as either digital or analog, not both. For example, you could use 2 analog inputs plus 10 digital inputs on the 1760-L18DWD-EX controller.

Pico Expansion I/O

Depending on which Pico controller you use, expansion I/O modules can provide up to 40 I/O points when used with expansion I/O modules.

You can only add one Pico expansion I/O module to each controller.

Table 3 Pico Expansion I/O Module Selection

Cat. No.	Input Voltage Category	Number of Inputs (Digital)	Number of Outputs
1760-IA12XOW6I	120 / 240V ac	12	6 (isolated relay)
1760-IB12XOB8	24V dc	12[1]	8 (transistor)
1760-IB12XOW6I	24V dc	12[1]	6 (isolated relay
1760-OW2	n/a	0	2 (relay)

(1) Four of the digital dc inputs can alternately be used as 0...10V dc analog inputs. These inputs can be used as either digital or analog, not both. For example, you could use 4 analog inputs plus 8 digital inputs.

Pico Accessories

This section provides information on various accessories.

Memory Modules

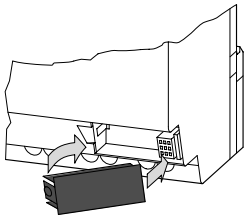

1760-MM1 for all 1760-L12xxx

Table 4 Pico Memory Module Selection

Cat. No.	Description
1760-MM1	Pico 8 K memory module for 12-point controllers
1760-MM2	Pico 16 K memory module for 18-point controllers
1760-MM2B	Pico 32 K memory module

Each memory module can store a single Pico circuit diagram. Information stored on the memory module is non-volatile. The memory module can be used to make a backup copy of a program and/or transfer it to another Pico controller.

Each memory module stores:

- the circuit diagram.
- all parameter settings of the circuit diagram.
- system settings.

IMPORTANT The 1760-MM2B 32k memory module will not operate with Series A controllers. In addition, 1760-MM1 and 1760-MM2 memory modules are READ ONLY when used with the Series B controllers.

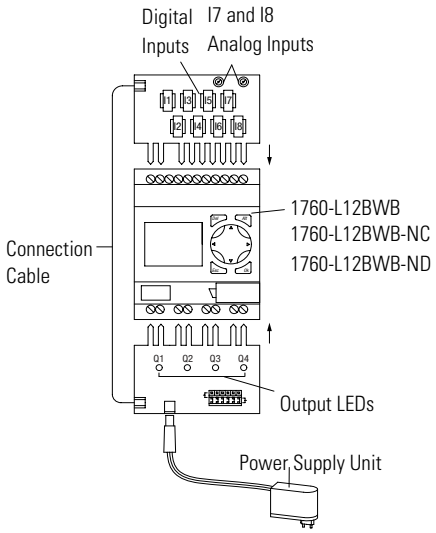

Input/Output Simulator

The DC Simulator, 1760-SIM, can be used to simulate Pico inputs and outputs to test and troubleshoot programs. The simulator contains input simulator board, output simulator board, and wall-mount power supply.

The input simulator board contains 8 maintained push buttons connected to the 8 inputs of Pico as well as 2 potentiometers connected to Inputs 7 and 8. The push buttons simulate digital input devices. The potentiometers can be used to simulate analog input devices. The output board contains four LEDs that simulate output devices.

Select Pico GFX-70 Controllers, I/O, and Accessories

Processors

This section helps you select Pico GFX-70 Controllers, I/O, and accessories. There are 4 processor versions.

Table 1 Pico GFX-70 Processor Selection

Processor	Line Power	Description
1760-LDF	24V dc	Pico GFX-70 DC processor unit
1760-LDFA	120/240V ac	Pico GFX-70 AC processor unit
1760-LDFC	24V dc	Pico GFX-70 DC processor unit with Pico-Link terminal
1760-LDFCA	120/240V ac	Pico GFX-70 AC processor unit with Pico-Link terminal

If your system requires more than 36 I/O, you will need to have multiple processors using the Pico-Link. You can connect up to 8 processors. To use the Pico-Link, select the 1760-LDFC or 1760-LDFCA processor.

GFX I/O Modules

GFX I/O modules connect to the back of the GFX processor. Pico Expansion I/O modules connect to side of controller, and can be used with Pico or Pico GFX-70 controllers.

You can only add one GFX I/O module and one Pico expansion I/O module to each controller. Pico expansion I/O is shown on page 14.

Table 5 Pico GFX I/O Modules Selection

Cat. No.	Input Voltage Category	Number of Inputs (Digital)	Number of Outputs	Analog Capability
1760-IA12XOW4I	120V ac	12	4 (relay)	none
1760-IB12XOW4IF	24V dc	12[1]	4 (relay)	input
1760-IB12XOW4IOF	24V dc	12[1]	4 (relay)	input and output
1760-IB12XOB4IF	24V dc	12[1]	4 (transistor)	input
1760-IB12XOB4IOF	24V dc	12[1]	4 (transistor)	input and output

(1) Four of the digital dc inputs can alternately be used as 0...10V dc analog inputs. These inputs can be used as either digital or analog, not both. For example, you could use 4 analog inputs plus 8 digital inputs.

Display Units

There are 2 display versions.

Table 6 Display Unit Selection

Cat. No	Description
1760-DUB	Display unit with keypad
1760-DU	Display unit without keypad

TIP

All controllers can be mounted on a panel.

Graphics display units cannot be mounted on a DIN rail. The Pico GFX-70 processor and other components can be mounted on a DIN rail.

GFX Accessories

The following table shows a summary of the accessories for Pico GFX controllers. Detailed descriptions for each item follow.

Table 7 Pico GFX-70 Selection

Cat. No.	Description
1760-CBL-PC02	Programming cable, PC to processor
1760-PICOSOFTPRO	PicoSoft Pro programming software (see page 8)
1760-PICOPRO-PC02	PicoSoft Pro software and cable kit (includes 1760-PICOSOFTPRO and 1760-CBL-PC02)
1760-MM3	256 K memory module
1606-XLP30E	Power supply
1760-CBL-2M	Point-to-point serial interface cable, 2 m (6.6 ft)

Table 7 Pico GFX-70 Selection

1760-CBL-5M	Point-to-point serial interface cable, 5 m (16.4 ft)
1760-CBL-INT01	Pico-link cable, 0.3 m (1 ft)
1760-CBL-INT03	Pico-link cable 0.8 m (2.6 ft)
1760-CBL-INT05	Pico-link cable 1.5 m (5 ft)
1760-CBL-INT300	Pico-link cable, non-terminated, 100 m (300 ft)
1760-CONN-RJ45	Connectors for Pico-link cable
1760-TERM1	Network termination resistor
1760-NDM	Membrane protect display
1760-NDC	Cover to protect display
1760-NMF	Mounting feet
1492-N90	Screwdriver
1492-KWC	Wire cutter

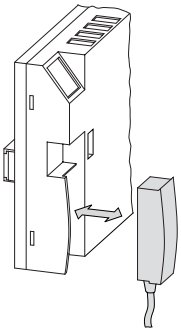

GFX Programming Cable (1760-CBL-PC02)

The programming cable is used to transfer data between the PC and the processor when using PicoSoft Pro Software.

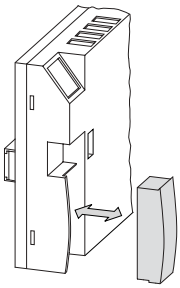

GFX 256K Memory Module (1760-MM3)

Information stored on the memory module is non-volatile. Use the module to archive, transfer, and copy your circuit diagram. Each memory module can store one GFX program. It stores the program, visualization data, and all parameter settings of the circuit diagram.

TIP Controllers without a keypad and display automatically transfer the circuit diagram from the inserted memory card to the Processor when the power supply is switched on. If the memory card contains an invalid circuit diagram, GFX will keep the circuit diagram still present on the device.

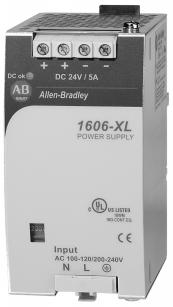

Power Supply (1606-XLP30E)

This 24V dc power supply is sized to provide enough power for any Pico-GFX 70 system. Line power can be 100 to 240V ac or 85 to 375V dc.

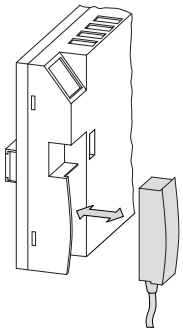

Point-to-Point Serial Interface Cables

The serial interface cables are available in two lengths.

Table 8 Serial Cable Selection

Cat. No.	Description
1760-CBL-2M	Point-to-point serial interface cable, 2 m (6.6 ft)
1760-CBL-5M	Point-to-point serial interface cable, 5 m (16.4 ft)

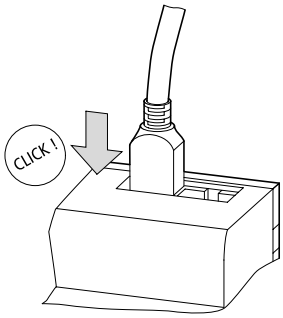

Cables for Pico-Link between Processors

The 1760-LDFC and 1760-LDFCA processors have two Pico-Link terminals. Up to 8 of these processors can be connected together. The first and last stations in the network must be provided with a 124 Ω termination resistor.

The 1760-LDFC and 1760-LDFCA processors have two RJ45 sockets. Socket 1 in the first station is for the termination resistor. For subsequent stations, socket 1 is used for plugging in the incoming cable. Socket 2 is used for the outgoing cable or for the termination resistor on the last physical station on the network.

The cables are available in several lengths, including a long, non-terminated version that you can cut to fit your needs.

Table 9 Pico-Link Cable Selection

Cat. No.	Description
1760-CBL-INT01	Pico-link cable, 0.3 m (1 ft)
1760-CBL-INT03	Pico-link cable 0.8 m (2.6 ft)
1760-CBL-INT05	Pico-link cable 1.5 m (5 ft)
1760-CBL-INT300	Pico-link cable, non-terminated, 100 m (300 ft)
1760-CONN-RJ45	Connectors for Pico-Link cable
1760-TERM1	Network termination resistor

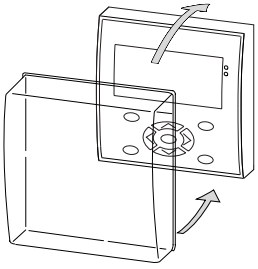

Protective Covers

For special applications such as in the food industry, the display and keypad must be protected against dust and liquids. For example, the protective membrane, 1760-NDM, has been designed specifically for this purpose.

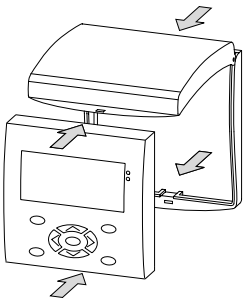

The protective cover, 1760-NDC, is designed to be used in aggressive environments. This protects the display and keypad against mechanical damage or destruction. Protection to IP65 is maintained. The protective cover can be sealed to prevent unauthorized access.

Mounting Feet

Mounting feet are required for attaching processors and I/O modules to a panel. Three mounting feet are sufficient for a device with four mounting points.

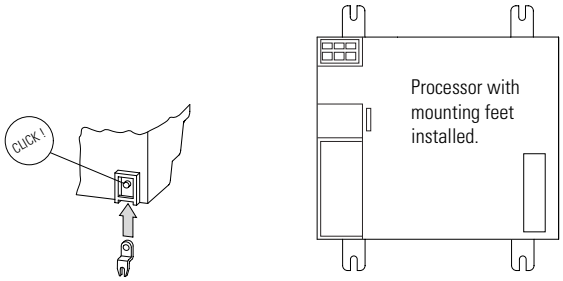

Tools

Terminal Block screwdriver, 1492-N90, with hardened 3 mm diameter blade (handle from recycled material).

Wire cutting tool, 1492-KWC, designed to attach directly to the shaft of the 1492-N90 screwdriver.

Specifications

Pico and Pico GFX-70 Specifications

Table 10 Environmental Specifications

Specification	Pico	Pico GFX-70
Operating temperature (Installed horizontally/vertically)	-25…55 °C (-13…131 °F)	-25…55 °C, (-13…131 °F)
Display legibility	-25…55 °C (-13…131 °F)	-5…50 °C, (-23…122 °F)
Storage/transport temperature	-40…70 °C (-40…158 °F)	-40…70 °C (-40…158 °F)
Relative humidity (IEC 60068-2-30)	5 to 95% non-condensing	5 to 95% non-condensing
Pollution degree	2	Power supply unit/CPU; inputs/outputs: 2 Display/keypad: 3
Degree of protection (EN50178, IEC 60529, VBG4)	IP20	Processor Unit; I/O :IP20 Display Unit: IP65
Vibration (IEC 60068-2-6)	Constant amplitude 0.15 mm: 10 … 57 Hz Constant acceleration 2g: 57 … 150 Hz	Constant amplitude 0.15 mm: 10 … 57 Hz Constant acceleration 2g: 57 … 150 Hz
Shock (IEC 60068-2-27)	18 shocks, semi-sinusoidal 15g/11 ms	18 shocks, semi-sinusoidal 15g/11 ms
Agency Certification	UL, CSA, CE Class I, Division 2 Hazardous Location	UL, CSA, CE

Pico Controllers and Pico Expansion I/O Specifications

Table 11 Pico AC Controllers Power Supply Specifications

Incoming Power	1760-L12AWA 1760-L12AWA-NC 1760-L12AWA-ND	1760-L18AWA 1760-L18AWA-EX 1760-L18AWA-EXND 1760-IA12XOW6I	1760-L12NWN 1760-L12NWN-ND 1760-L18NWN-EX 1760-L18NWN-EXND
Rated value (sinusoidal)	110…240V ac +10/-15%	100…240V ac +10/-15%	24V ac, +10 / -15%
Range	90…264V ac	85…264V ac	20.4…26.4V ac
Frequency, rated value, tolerance	50/60 Hz, ±5%	50/60 Hz, ±5%	50/60 Hz, ±5%
Line Current			
at 115/120V ac 60 Hz	Nominal 40 mA	Nominal 70 mA	–
at 230/240V ac 50 Hz	Nominal 20 mA	Nominal 35 mA	–
at 24V ac 50/60 Hz	–	–	Nominal 200 mA (1760-L12) Nominal 300 mA ((1760-L18)
Voltage dips	20 ms, EN 61131-2	20 ms, EN 61131-2	20 ms, EN 61131-2
Power Consumption			
at 115/120V ac	Nominal 5 VA	Nominal 10 VA	–
at 230/240V ac	Nominal 5 VA	Nominal 10 VA	–
at 24V ac	–	–	Nominal 5 VA (1760-L12) Nominal 7 VA (1760-L18)

Table 12 Pico DC Controllers Power Supply Specifications

Incoming Power	**1760-L12DWD** **1760-L12DWD-ND**	**1760-L18DWD-EX** **1760-L18DWD-EXND**	**1760-L12BBB** **1760-L12BBB-ND** **1760-L12BWB** **1760-L12BWB-NC** **1760-L12BWB-ND**	**1760-L18BWB-EX** **1760-L20BBB-EX** **1760-L20BBB-EXND** **1760-IB12XOW6I** **1760-IB12XOB8**
Rated voltage				
Rated value	12V dc, +30%, -15%	12V dc, +30%, -15%	24V dc, +20%, -15%	24V dc, +20%, -15%
Range	10.2…15.6V dc	10.2…15.6V dc	20.4…28.8V dc	20.4…28.8V dc
Residual ripple	≤5%	≤5%	≤5%	≤5%
Input current	Nominal 140 mA at 12V dc	Nominal 200 mA at 12V dc	Nominal 80 mA at 24V dc	Nominal 140 mA at 24V dc
Voltage dips	10 ms, EN 61131-2	10 ms, EN 61131-2	10 ms, EN 61131-2	10 ms, EN 61131-2
Power dissipation at 24V dc	Nominal 2W	Nominal 3.5W	Nominal 2W	Nominal 3.5W

Table 13 Pico 24V ac Controllers Input Specifications

Specification	**1760-L12NWN** **1760-L12NWN-ND**	**1760-L18NWN-EX** **1760-L18NWN-EXND**
Number of digital inputs	8	12
Rated voltage	24V ac	24V ac
Off-state voltage	0…6V ac	0…6V ac
On-state voltage	14…26.4V ac	14…26.4V ac
Rated frequency	50/60 Hz	50/60 Hz
Input current I1 to I6 (1760-L18NWN-xx also I9 to I10)	4 mA at 24V ac 50 Hz	4 mA at 24V ac 50 Hz
Input current I7, I8 (1760-L18NWN-xx also I11 and I12)	2 mA at 24V ac 50 Hz, 2 mA at 24V	2 mA at 24V ac 50 Hz, 2 mA at 24V
Signal delay	Debounce On: 80 ms (50 Hz), 66.66 ms (60 Hz) Debounce Off: 20 ms (50 Hz), 16.66 ms (60 Hz)	Debounce On: 80 ms (50 Hz), 66.66 ms (60 Hz) Debounce Off: 20 ms (50 Hz), 16.66 ms (60 Hz)
Number of analog inputs	2	4
Input Type	dc voltage	dc voltage
Signal Range	0…10V dc	0…10V dc

Table 14 Pico 120/240V ac Controllers and Expansion I/O Input Specifications

Specification	**1760-L12AWA** **1760-L12AWA-NC** **1760-L12AWA-ND**	**1760-L18AWA** **1760-L18AWA-EX** **1760-L18AWA-EXND** **1760-IA12XOW6I**[(1)]
Number of digital inputs	8	12
Rated voltage (sinusoidal)	120/240V ac	120/240V ac
Off-state voltage	0…40V ac	0…40V ac
On-state voltage	79…264V ac	79…264V ac
Rated frequency	50/60 Hz	50/60 Hz

Table 14 Pico 120/240V ac Controllers and Expansion I/O Input Specifications

Specification	1760-L12AWA 1760-L12AWA-NC 1760-L12AWA-ND	1760-L18AWA 1760-L18AWA-EX 1760-L18AWA-EXND 1760-IA12XOW6I[1]
Input current R1 to R12, I1 to I6 (1760-L18AWA-xx also I9 to I12)	0.5 mA at 230V ac 50 Hz, 0.25 mA at 115V ac 60 Hz	0.5 mA at 230V ac 50 Hz 0.25 mA at 115V ac 60 Hz
Input current I7, I8	6 mA at 230V ac 50 Hz, 4 mA at 115V ac 60 Hz	6 mA at 230V ac 50 Hz, 4 mA at 115V ac 60 Hz
Signal delay I1 to I6 and I9 to I12 from 0 to 1 and from 1 to 0	Debounce On: 80 ms (50 Hz), 66.66 ms (60 Hz) Debounce Off: 20 ms (50 Hz), 16.66 ms (60 Hz)	
Signal delay Delay time I7, I8 from 1 to 0	Debounce On: 160 ms (50 Hz), 150 ms (60 Hz) Debounce Off: 100 ms (50 Hz/60 Hz)	Debounce On: 80 ms (50 Hz), 66.66 ms (60 Hz) Debounce Off: 20 ms (50 Hz), 16.66 ms (60 Hz)
Signal delay I7, I8 from 0 to 1	Debounce On: 80 ms (50 Hz), 66.66 ms (60 Hz) Debounce Off: 20 ms (50 Hz), 16.66 ms (60 Hz)	

(1) Delay times for expansion modules are circuit delays only. Additional time is needed to transfer the status to the controller.

Table 15 Pico DC Controllers and Expansion I/O Input Specifications

Specification	1760-L12DWD 1760-L12DWD-ND 1760-L18DWD-EX 1760-L18DWD-EXND	1760-L12BBB 1760-L12BBB-ND 1760-L12BWB 1760-L12BWB-NC 1760-L12BWB-ND	1760-L18BWB-EX 1760-L18BWB-EXND 1760-L20BBB-EX 1760-L20BBB-EXND 1760-IB12XOB8[1] 1760-IB12XOW6I
Number of digital inputs	8 (1760-L12DWD-*xx*) 12 (1760-L18DWD-*xx*)	8	12
Inputs usable as analog inputs	2 inputs (I7 and I8),		4 inputs (I7, I8, I11, I12) for 1760-L18*xxx* and 1760-L20*xxx*
Inputs usable as high-speed inputs (I1, I2, I3, I4)	4	4	4 (1760-L18*xxx* and 1760-L20*xxx*)
Rated Voltage	12V dc	24V dc	24V dc
Off-state Voltage	4.0V dc I1 to I8	< 5.0V dc	< 5.0V dc (I1 to I12, R1 to R12)
On-state Voltage	8V dc I1 to I8	• 15…28.8V dc (I1 to I6) • 8…28.8V dc (I7, I8)	• 15…28.8V dc (I1 to I6, I9 to I12, R1 to R12) • 8…28.8V dc (I7, I8)
On-state Current	• 3.3 mA at 12V dc (I1 to I6) (and I9 to I12 for 1760-L18DWD-xx) • 1.1 mA at 12V dc (I7, I8)	• 3.3 mA at 24V dc (I1 to I6) • 2.2 mA at 24V dc (I7, I8)	• 3.3 mA at 24V dc (I1 to I6, I9 to I12, R1 to R12) • 2.2 mA at 24V dc (I7, I8)
Signal delay, 0 to 1	Debounce On: 20 ms Nominal 0.3 ms	Debounce On: 20 ms Debounce Off: Nominal 0.25 ms	Debounce On: 20 ms Debounce Off: Nominal 0.25 ms
Signal delay, 1 to 0	Debounce On: 20 ms Debounce Off: Nominal 0.3 ms (I1 to I6 and I9 to I10 1760-L18*xxx*) Nominal 0.35 ms (I7, I8 and I11 to I12 1760-L18*xxx*)	Debounce On: 20 ms Debounce Off: Nominal 0.4 ms (I1 to I6) Nominal 0.2 ms (I7, I8)	Debounce On: 20 ms Debounce Off: Nominal 0.4 ms (I1 to I6) Nominal 0.2 ms (I7, I8)

Table 15 Pico DC Controllers and Expansion I/O Input Specifications

Specification	1760-L12DWD 1760-L12DWD-ND 1760-L18DWD-EX 1760-L18DWD-EXND	1760-L12BBB 1760-L12BBB-ND 1760-L12BWB 1760-L12BWB-NC 1760-L12BWB-ND	1760-L18BWB-EX 1760-L18BWB-EXND 1760-L20BBB-EX 1760-L20BBB-EXND 1760-IB12XOB8[1] 1760-IB12XOW6I
Number of analog inputs	2 (4 inputs 1760-L18DWD-xx)	2	4
Input Type	dc voltage	dc voltage	dc voltage
Signal Range	0…10V dc	0…10V dc	0…10V dc
Analog Resolution	0.1V	0.1V	0.1V
Input Impedance	11.2K Ω	11.2K Ω	11.2K Ω
Accuracy of			
Accuracy, Two Pico Devices	±3% of actual value	±3% of actual value	±3% of actual value
Accuracy, Within a Single Device (I7, I8)	±2% of actual value ±0.12V	±2% of actual value ±0.12V	±2% of actual value ±0.12V
Input Current	< 1 mA	< 1 mA	< 1 mA
Analog to Digital Conversion Time	Debounce On: 20 ms Debounce Off: every cycle	Debounce On: 20 ms Debounce Off: every cycle	Debounce On: 20 ms Debounce Off: every cycle
Number of high-speed inputs (I1, I2, I3, I4)	4	4	4 (1760-L18xxx and 1760-L20xxx)
High-speed up and down counters	Frequency: < 1 kHz, Pulse shape: square wave		
Frequency counters	Frequency: < 1 kHz, Pulse shape: square wave		

(1) Delay times for expansion modules are circuit delays only. Additional time is needed to transfer the status to the controller.

Table 16 Pico Controllers and Expansion I/O Relay Output Specifications

Specification	1760-L12AWA-*xx* 1760-L12BWB-*xx* 1760-L12DWD-*xx* 1760-L12NWN-*xx*	1760-L18AWA-*xx* 1760-L18BWB-*xx* 1760-L18DWD-*xx* 1760-L18NWN-*xx* 1760-IA12XOW6I 1760-IB12XOW6I
Number of relay outputs	4	6
In Groups of	1	
Connection of Outputs in Parallel to Increase the Output	Not permissible	
Protection for an Output Relay	Miniature circuit-breaker B16 or 8 A fuse (slow)	
Isolation to Power Supply and Inputs	300V ac reinforced insulation	
Contacts Relays		
Conventional Thermal Current	8 A (10 A UL)	
Recommended for Load	> 500 mA, 12V ac/dc	
Short-Circuit Resistance COS 1	16 A characteristic B (B16) at 600 A	
Short-Circuit Resistance COS 0.5 to 0.7	16 A characteristic B (B16) at 900 A	
Rated Impulse Withstand Voltage U_{imp} Contact/Coil	6 KV	
Rated Insulation Voltage U_i		
Rated Operational Voltage U_e	250V ac	
Isolation to EN 50178 Between Coil and Contact	300V ac reinforced insulation	

Table 16 Pico Controllers and Expansion I/O Relay Output Specifications

Specification	1760-L12AWA-*xx* 1760-L12BWB-*xx* 1760-L12DWD-*xx* 1760-L12NWN-*xx*	1760-L18AWA-*xx* 1760-L18BWB-*xx* 1760-L18DWD-*xx* 1760-L18NWN-*xx* 1760-IA12XOW6I 1760-IB12XOW6I
Isolation to EN 50178 Between Two Contacts	300V ac reinforced insulation	
Making Capacity		
AC-15 COS ϕ = 0.4, 250V ac, 3A (600 Ops/h)	300,000 switching operations	
DC-13 L/R ≤150 ms, 24V dc, 1A (500 Ops/h)	200,000 switching operations	
Breaking Capacity		
AC-15 COS ϕ = 0.7 250V ac, 3 A (600 Ops/h)	300,000 switching operations	
DC-13 L/R ≤150 ms 24V DC, 1 A (500 Ops/h)	200,000 switching operations	
Filament Lamp Load	1000 W at 230/240V ac/25,000 operations 500 W at 115/120V ac/25,000 operations	
Fluorescent Tube with Ballast	10 x 58 W at 230/240V ac/25,000 operations	
Conventional Fluorescent Tube, Compensated	1 x 58 W at 230/240V ac/25,000 operations	
Fluorescent Tube, Uncompensated	10 x 58 W at 230/240V ac/25,000 operations	
Relay Operating Frequency		
Mechanical Switching Operations	10 million (10^7)	
Mechanical Switching Frequency	10 Hz	
Resistive Lamp Load	2 Hz	
Inductive Load	0.5 Hz	

Table 17 Pico Controllers and Expansion I/O Transistor Output Specifications

Specification	1760-L12BBB 1760-L12BBB-ND	1760-IB12XOB8 1760-L20BBB-EX 1760-L20BBB-EXND
Number of transistor outputs	4	8
Rated Voltage	24V dc	
Voltage Range	20.4...28.8V dc	
Residual Ripple	≤5%	
Supply Current		
Outputs Off	18 mA nominal, 32 mA Max	
Outputs On	24 mA nominal, 44 mA Max	
Reverse Polarity Protection	Yes **IMPORTANT:** If voltage is applied to the outputs when the polarity of the power supply is reversed, this will result in a short circuit.	
Isolation from Power Supply and Input Terminals	500V dc	
Rated Current	0.5 A dc Max	
Lamp Load	5 W	
Off State Leakage Current	< 0.1 mA per channel	
Maximum Output Voltage Drop	1V dc	
Short Circuit Protection	Yes, thermal (detected via diagnostics input I16, I15; R15, R16)	

Table 17 Pico Controllers and Expansion I/O Transistor Output Specifications

Specification	1760-L12BBB 1760-L12BBB-ND	1760-IB12XOB8 1760-L20BBB-EX 1760-L20BBB-EXND
Short Circuit Tripping Current, I for Load ≤10 milli-ohm	0.7 A ≤ I ≤ 2 A (depending on the number of active channels and their load)	
Short Circuit Current	8 A total Max	16 A total Max
	16 A peak	32 A peak
Thermal Cutout	Yes	
Maximum Switching Frequency with Constant Resistive Load RL < 100 kΩ	40,000 Hz (depending on circuit diagram and load)	
Number of Outputs	4 Max	
Total Maximum Current	2.0 A **IMPORTANT:** Outputs must be actuated simultaneously and for the same time duration.	
Status Display of the Outputs	LCD display (if provided)	

Pico GFX-70 Specifications

Table 18 Power Supply for Pico GFX-70 Specifications

Specification	1606-XLP30E
Input Voltage	• AC: 100…240V, 47…63 Hz • DC: 85…375V
Output Power	30 W
Output Voltage	24…28V dc
Rated Output Current	• 1.3 A at 24.5V • 1 A at 28V
Approvals	• CE • C-UL-US Listed (UL508) • C-UR-US Listed (UL1950) • Safety Standards IEC/EN 60950 EN50178 • EMC: EN50081-1, EN61000-6-2, EN61000-3-2 • NEC Class 2 • FM Class 1 Div. 2 (T3A)

Table 19 GFX I/O Modules Input Specifications

Specification	1760-IB12XOW4IF, 1760-IB12XOW4IOF 1760-IB12XOB4IF, 1760-IB12XOB4IOF	1760-IA12XOW4I
Number of digital inputs	12	12
Inputs usable as analog inputs (I7, I8, I11, I12)	4	0
Inputs usable as high-speed inputs (I1, I2, I3, I4)	4	0
Rated voltage	24V dc	120/240V ac
Off-state voltage	I1 to I6 and I9 to I10: < 5V dc I7, I8, I11, I12: < 8V dc	0…40V ac
On-state voltage	I1 to I6 and I9 to I10: > 15V dc I7, I8, I11, I12: > 8V dc	79…264V ac
On-state current	I1 to I6, I9 to I10 at 24V dc: 3.3 mA I7, I8, I11, I12 at 24V dc: 2.2 mA	115V ac: 0.2 mA 230V ac: 0.5 mA
Signal delay	Debounce On: 20 ms Debounce Off, typical: I1 to I4s: 0.025 ms I5, I6, I9, I10: 0.25 ms I7, I8, I11, I12: 0.15 ms	–
Number of analog inputs (I7, I8, I11, I12)	4	0
Input type	DC voltage	–
Signal range	0…10V dc	–
Resolution analog	0.01V	–
Resolution digital	10-bit (0…1023 counts)	–
Input impedance	11.2K Ω	–
Accuracy	Two GFX devices, from actual value: ±3% Within a unit, from actual value, (I7, I8, I11, I12): ±2%	–
Input current	< 1 mA	–
Conversion time, analog to digital	Debounce On: 20 ms Debounce OFF: each cycle time	–
Number of high-speed inputs (I1, I2, I3, I4)	4	0
High-speed up and down counters	Frequency: < 3 kHz Pulse shape: square wave	–
Frequency counters	Frequency: < 3 kHz Pulse shape: square wave	–
Incremental counter encoder	Frequency: < 3 kHz Pulse shape: square wave Counter inputs I1 and I2, I3 and I4: 2 Signal offset: 90°	–

Table 20 GFX I/O Modules Relay Output Specifications

Specification	1760-IA12XOW4I, 1760-IB12XOW4IF 1760-IB12XOW4IOF, 1760-OW2
Number of relay outputs	4 (2 for the 1760-OW2)
Type of outputs	Relays
In groups of	1
Connection of outputs in parallel to increase the output	Not permissible
Protection for an output relay	Miniature circuit-breaker B16: 16 A or fuse (slow-blow): 8 A
Potential isolation to mains power supply, input, PC interface, memory module, Pico-Link network, expansion I/O	Safe isolation: 300V ac Basic insulation: 600V ac
Mechanical life span	10 x 10^6 switch operations
Contacts relays	
Conventional thermal current, (UL)	8 A, (10 A)
Recommended for load at 12V ac/dc	> 500 mA
Protected against short-circuit cos $\varphi = 1$, 16 A characteristic B (B16) at	600 A
Protected against short-circuit cos $\varphi = 0.5$ to 0.7, 16 A characteristic B (B16) at	900 A
Rated impulse withstand voltage U_{imp} contact coil	6 kV
Rated insulation voltage U_i	
Rated operational voltage U_e	250V ac
Safe isolation to EN 50178 between coil and contact	300V ac
Safe isolation to EN 50178 between two contacts	300V ac
Making capacity, IEC 60947	
AC-15 250V ac, 3 A (600 Ops/h)	300,000 switch operations
DC-13 L/R ≤150 ms 24V dc, 1 A (500 Ops/h)	200,000 switch operations
Breaking capacity, IEC 60947	
AC-15 250V ac, 3 A (600 Ops/h)	300,000 switch operations
DC-13 L/R ≤150 ms 24V dc, 1 A (500 Ops/h)	200,000 switch operations
Filament lamp load	
1000 W at 230/240V ac	25,000 switch operations
500 W at 115/120V ac	25,000 switch operations
Fluorescent tube with ballast, 10 x 58 W at 230/240V ac	25,000 switch operations
Conventional fluorescent tube, compensated, 1 x 58 W at 230/240V ac	25,000 switch operations
Conventional fluorescent tube, uncompensated, 10 x 58 W at 230/240V ac	25,000 switch operations
Operating frequency, relays	
Mechanical switch operations	10 million (10^7) switch operations
Mechanical switching frequency	10 Hz
Resistive lamp load	2 Hz
Inductive load	0.5 Hz

Table 21 GFX I/O Modules Transistor Output Specifications

Specification	1760-IB12XOB4IF, 1760-IB12XOB4IOF
Transistor Outputs	4
Rated voltage	24V dc (20.4V dc…28.8V dc)
Supply current	On 0 state: 18 mA (typical), 32 mA (Max) On 1 state: 24 mA (typical), 44 mA (Max)
Rated current at state 1, maximum	0.5 A
Residual current at state “0” per channel	< 0.1 mA
Short-circuit protection Thermal (Q1 to Q4)	Yes (evaluation with diagnostics inputs I16, I15)
Max total short-circuit current	8 A
Peak short-circuit current	16 A
Thermal cutout	Yes
Total max current	2 A
IMPORTANT	Outputs must be actuated simultaneously and for the same time duration.

Table 22 GFX I/O Modules Analog Output Specifications

Specification	1760-IB12XOW4IOF, 1760-IB12XOB4IOF
Analog Outputs	1
Output type	DC voltage
Signal range	0…10V dc
Output current max	10 mA
Load resistor	1k Ω
Short-circuit and overload proof	Yes
Resolution analog	0.01V dc
Resolution digital	10-bit 0…1023 counts
Transient recovery time	100 µs
Accuracy (-25…55 °C), related to the range	2%
Accuracy (25 °C), related to the range	1%
Conversion time	Each CPU cycle

Mounting Dimensions

Figure 1 Pico 12-Point Controller

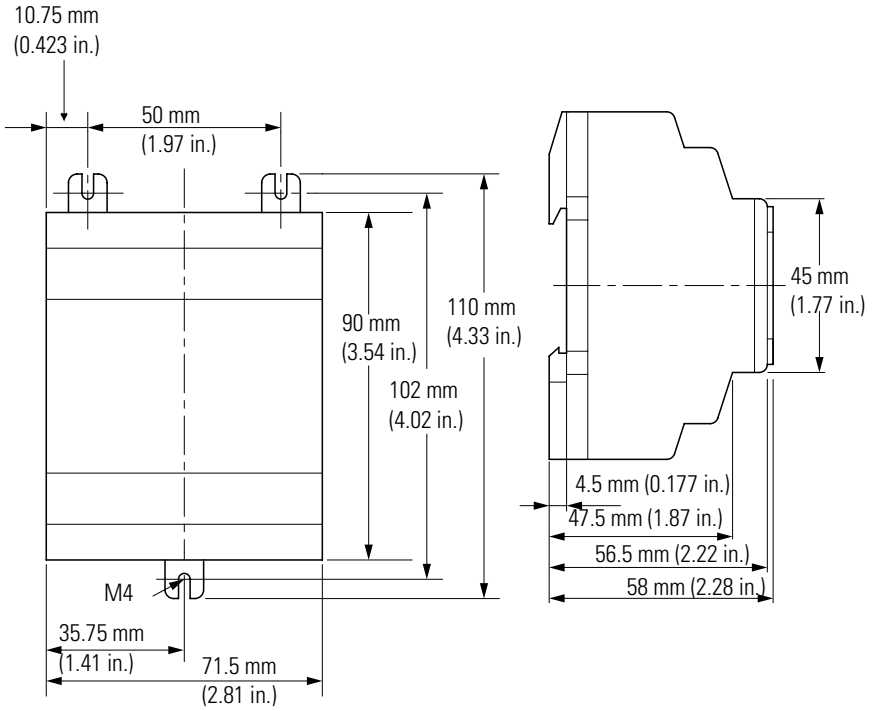

Figure 2 Pico 18- and 20-Point Controllers and Pico Expansion I/O Modules

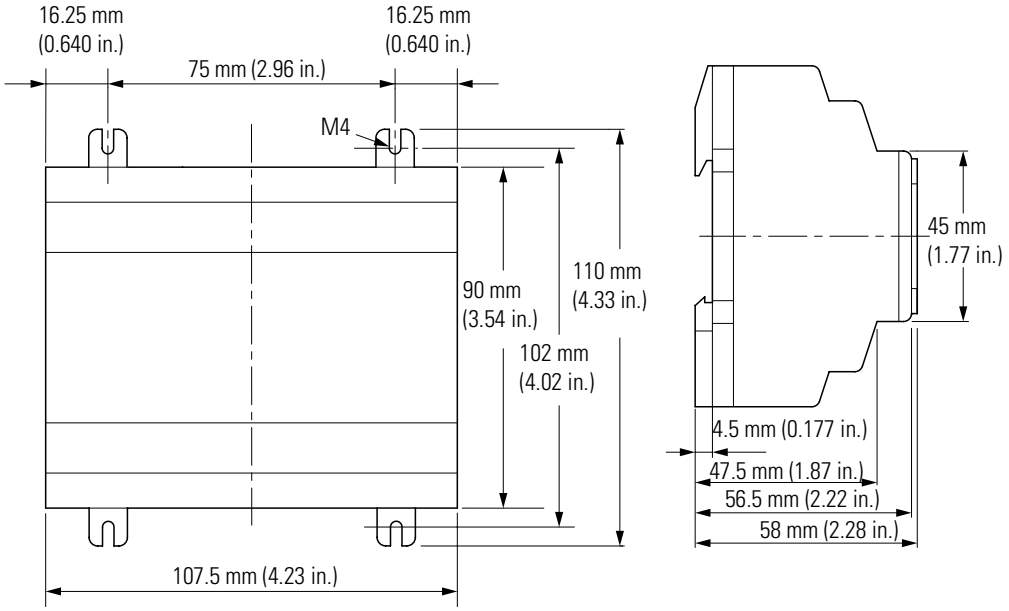

Figure 3 Pico Remote Processor

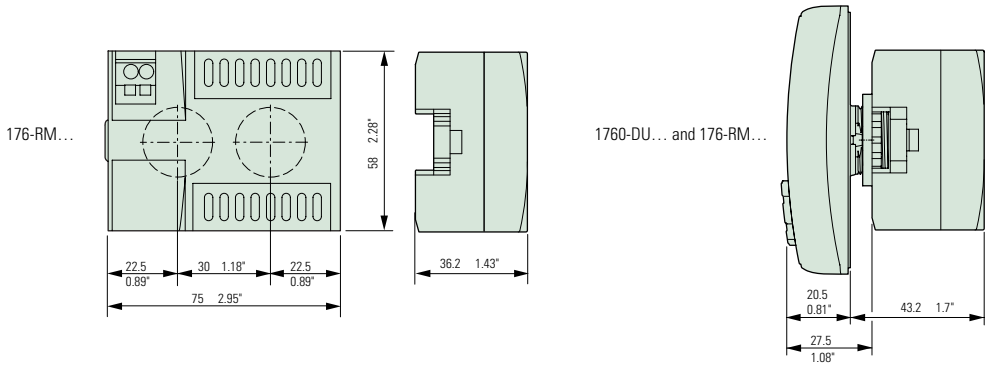

Figure 4 Pico GFX-70 Display Unit (with and without keypad)

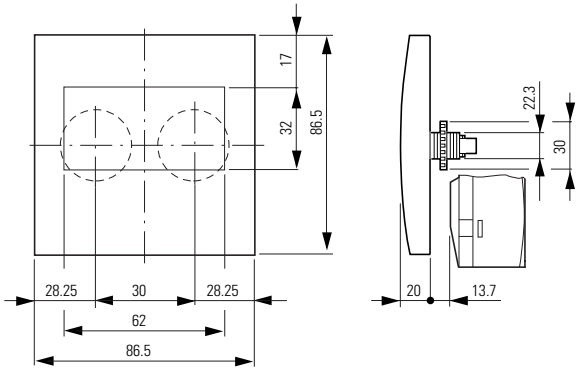

Specification	1760-DU and 1760-DUB
Front dimensions (W x H x D), Approx.	1760-DUB (with keys): 86.5 x 86.5 x 21.5 mm (3.41 x 3.41 x 0.85 in.) 1760-DU (without keys): 86.5 mm x 86.5 mm x 20 mm (3.41 x 3.41 x 0.79 in.)
Total dimensions with fixing shaft (W x H x D), Approx.	With keys: 86.5 x 86.5 x 43 mm (3.41 x 3.41 x 1.69 in.)

Figure 5 Pico GFX-70 Protective Membrane

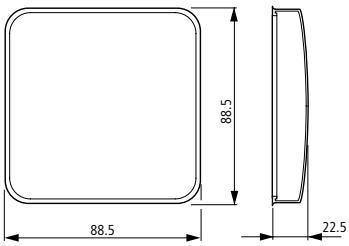

Specification	1760-NDM
Dimensions (W x H x D), Approx.	88.5 x 88.5 x 25 mm (3.46 x 3.46 x 0.98 in.)

Figure 6 Pico GFX-70 Protective Cover

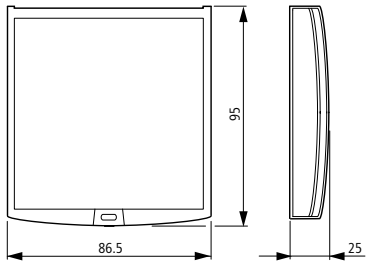

Specification	1760-NDC
Dimensions (W x H x D), Approx.	86.5 x 95 x 25 mm (3.41 x 3.41 x 0.98 in.)

Figure 7 Pico GFX-70 Processor Unit

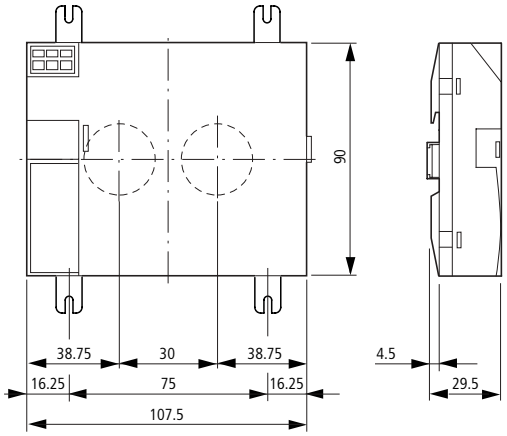

Specification	1760-LDF, 1760-LDFA, 1760-LDFC, 1760-LDFCA
Dimensions (W x H x D), Approx.	107.5 x 90 x 30 mm (4.23 x 3.54 x 1.18 in.)

Figure 8 Pico GFX-70 I/O Modules

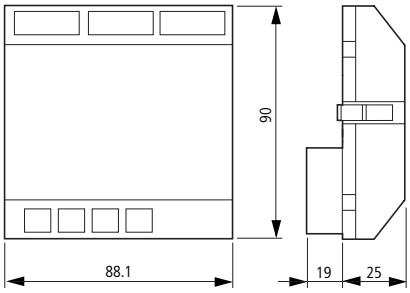

Specification	1760-IA12XOW4I 1760-IB12XOW4IF 1760-IB12XOW4IOF 1760-IB12XOB4IF 1760-IB12XOB4IOF
Dimensions when fitted (W x H x D), Approx.	88.1 x 90 x 25 mm (3.5 x 3.54 x 0.98 in.)
Dimensions when removed (W x H x D), Approx.	88.1 x 90 x 44 mm (3.5 x 3.54 x 1.73 in.)

Figure 9 Pico GFX-70 Power Supply

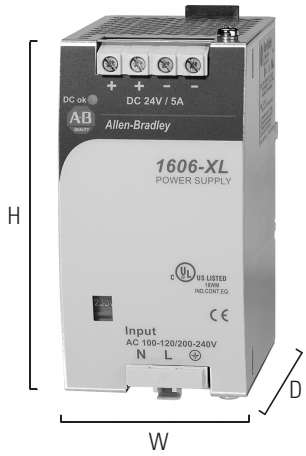

Specification	1606-XLP30E
Dimensions (W x H x D), Approx.	45 x 75 x 91 mm (1.77 x 2.95 x 3.58 in.)

Fill in the Selection Worksheet

Catalog Number	Description	Pieces per Package	Quantity Selected
Programming Software and Cable			
1760-PICOSOFTPRO[1]	PicoSoft Pro Programming Software	1	
1760-CBL-PM02	Programming Cable, PC to Pico Processor		
1760-CBL-PC02	Programming Cable, PC to Pico GFX Processor	1	
1760-PICOPRO-PC02	PicoSoft Pro Software and Pico GFX Cable Kit	1	
Communications Module			
1760-DNET	Pico DeviceNet Module	1	
Pico Controllers			
1760-L12AWA	Pico 12-Point AC Controller	1	
1760-L12AWA-NC	Pico 12-Point AC Controller without Real-Time Clock	1	
1760-L12AWA-ND	Pico 12-Point AC Controller without Display	1	
1760-L12BBB	Pico 12-Point DC Controller	1	
1760-L12BBB-ND	Pico 12-Point DC Controller without Display	1	
1760-L12BWB	Pico 12-Point DC Controller	1	
1760-L12BWB-NC	Pico 12-Point DC Controller without Real-Time Clock	1	
1760-L12BWB-ND	Pico 12-Point DC Controller without Display	1	
1760-L12DWD	Pico 12-Point AC Controller	1	
1760-L12DWD-ND	Pico 12-Point AC Controller without Display	1	
1760-L12NWN	Pico 12-Point AC Controller	1	
1760-L12NWN-ND	Pico 12-Point AC Controller without Display	1	
1760-L18AWA-EX	Pico 18-Point AC Controller I/O Expandable	1	
1760-L18AWA-EXND	Pico 18-Point AC Controller I/O Expandable without Display	1	
1760-L18BWB-EX	Pico 18-Point DC Controller I/O Expandable	1	
1760-L18BWB-EXND	Pico 18-Point DC Controller I/O Expandable without Display	1	
1760-L18DWD-EX	Pico 18-Point DC Controller I/O Expandable	1	
1760-L18DWD-EXND	Pico 18-Point DC Controller I/O Expandable without Display	1	
1760-L18NWN-EX	Pico 18-Point AC Controller I/O Expandable	1	
1760-L18NWN-EXND	Pico 18-Point AC Controller I/O Expandable without Display	1	
1760-L20BBB-EX	Pico 20-Point DC Controller I/O Expandable	1	
1760-L20BBB-EXND	Pico 20-Point DC Controller I/O Expandable without Display	1	
Pico Expansion I/O Modules			
1760-IA12XOW6I	(12) 120/240V ac inputs, (6) isolated relay outputs	1	
1760-IB12XOB8	(12) 24V dc inputs, (8) transistor outputs	1	
1760-IB12XOW6I	(12) 24V dc inputs, (6) isolated relay outputs	1	
1760-OW2	(2) relay outputs	1	
1760-RPLCONN	Expansion Module Connector - included with expansion module. Catalog number listed is replacement part.	1	
Pico GFX-70 Processor Units			
1760-LDF	Pico GFX-70 DC Processor Unit	1	
1760-LDFA	Pico GFX-70 AC Processor Unit	1	
1760-LDFC	Pico GFX-70 DC Processor Unit with Pico-Link Terminal	1	
1760-LDFCA	Pico GFX-70 AC Processor Unit with Pico-Link Terminal	1	
Pico Remote Processor Units			
1760-RM-PICO	Pico Remote Processor Unit	1	

Catalog Number	Description	Pieces per Package	Quantity Selected
1760-RM-GFX	Pico GFX-70 Remote Processor Unit	1	
Pico GFX-70 I/O Modules			
1760-IA12XOW4I	(12) 120V ac inputs, (4) relay outputs	1	
1760-IB12XOW4IF	(12) 24V dc inputs, (4) relay outputs, analog input	1	
1760-IB12XOW4IOF	(12) 24V dc inputs, (4) relay outputs, analog input and output	1	
1760-IB12XOB4IF	(12) 24V dc inputs, (4) transistor outputs, analog input	1	
1760-IB12XOB4IOF	(12) 24V dc inputs, (4) transistor outputs, analog input and output	1	
Display Units			
1760-DUB	Display Unit with Push buttons	1	
1760-DU	Display Unit without Push buttons	1	
Memory Module			
1760-MM1	Pico 8 K Memory Module for 12-Point Controllers	1	
1760-MM2	Pico 16 K Memory Module for 18-Point Controllers	1	
1760-MM2B	Pico 32 K Memory Module	1	
1760-MM3	Pico GFX-70 256 K Memory Module	1	
Power Supply			
1606-XLP30E	DC Power Supply	1	
Point-to-Point Serial Interface Cables			
1760-CBL-2M	Point-to-Point Serial Interface Cable, 2 m (6.6 ft)	1	
1760-CBL-5M	Point-to-Point Serial Interface Cable, 5 m (16.4 ft)	1	
Cables for Pico-Link between Processors			
1760-CBL-INT01	Pico-Link Cable, 0.3 m (1 ft)	5	
1760-CBL-INT03	Pico-Link Cable 0.8 m (2.6 ft)	3	
1760-CBL-INT05	Pico-Link Cable 1.5 m (5 ft)	2	
1760-CBL-INT300	Pico-Link Cable, non-terminated, 100 m (300 ft)	1	
1760-CONN-RJ45	Connectors for Pico-Link Cable	2	
1760-TERM1	Network Termination Resistor	2	
Protective Covers			
1760-NDM	Membrane Protect Display	1	
1760-NDC	Cover Protect Display	1	
Mounting Feet			
1760-NMF	Mounting Feet (for panel mounting processors and I/O modules)	8	
Tools			
1492-N90	Screwdriver	5	
1492-KWC	Wire Cutter	1	
Input Simulator			
1760-SIM	Input Simulator for 12 I/O DC Pico Controller	1	

PicoSoft software version 6.1 or later must be used for the Series B Pico controller. Earlier versions of PicoSoft software can only be used with Series A Pico controllers.

Rockwell Automation Support

Rockwell Automation provides technical information on the Web to assist you in using its products. At http://support.rockwellautomation.com, you can find technical manuals, a knowledge base of FAQs, technical and application notes, sample code and links to software service packs, and a MySupport feature that you can customize to make the best use of these tools.

For an additional level of technical phone support for installation, configuration, and troubleshooting, we offer TechConnect Support programs. For more information, contact your local distributor or Rockwell Automation representative, or visit http://support.rockwellautomation.com.

Installation Assistance

If you experience a problem with a hardware module within the first 24 hours of installation, please review the information that's contained in this manual. You can also contact a special Customer Support number for initial help in getting your module up and running.

United States	1.440.646.3223 Monday – Friday, 8am – 5pm EST
Outside United States	Please contact your local Rockwell Automation representative for any technical support issues.

New Product Satisfaction Return

Rockwell tests all of its products to ensure that they are fully operational when shipped from the manufacturing facility. However, if your product is not functioning, it may need to be returned.

United States	Contact your distributor. You must provide a Customer Support case number (see phone number above to obtain one) to your distributor in order to complete the return process.

www.rockwellautomation.com

Power, Control and Information Solutions Headquarters

Americas: Rockwell Automation, 1201 South Second Street, Milwaukee, WI 53204-2496 USA, Tel: (1) 414.382.2000, Fax: (1) 414.382.4444
Europe/Middle East/Africa: Rockwell Automation, Vorstlaan/Boulevard du Souverain 36, 1170 Brussels, Belgium, Tel: (32) 2 663 0600, Fax: (32) 2 663 0640
Asia Pacific: Rockwell Automation, Level 14, Core F, Cyberport 3, 100 Cyberport Road, Hong Kong, Tel: (852) 2887 4788, Fax: (852) 2508 1846

Publication 1760-SG001F-EN-P - May 2006
Supersedes Publication 1760-SG001E-EN-P - January 2006
Copyright © 2006 Rockwell Automation, Inc. All rights reserved. Printed in the U.S.A.