Technical Data

Original Instructions

FLEX 5000 Module Specifications

Digital I/O Module Catalog Numbers 5094-IA16, 5094-IA16XT, 5094-IM8, 5094-IM8XT, 5094-IB16, 5094-IB16XT, 5094-IB32, 5094-IB32XT, 5094-OA16, 5094-OA16XT, 5094-OB8, 5094-OB8XT, 5094-OB16, 5094-OB16XT, 5094-OB32, 5094-OB32XT, 5094-OW8I, 5094-OW8IXT

Analog I/O Module Catalog Numbers 5094-IF8, 5094-IF8XT, 5094-IY8, 5094-IY8XT, 5094-OF8, 5094-OF8XT, 5094-IF8IH, 5094-IF8IHXT, 5094-OF8IH, 5094-OF8IHXT

Specialty Module Catalog Numbers 5094-HSC, 5094-HSCXT, 5094-SERIAL, 5094-SERIALXT, 5094-IJ2I, 5094-IJ2IXT

Safety Digital I/O Module Catalog Numbers 5094-IB16S, 5094-IB16SXT, 5094-OB16S, 5094-OB16SXT, 5094-OW4IS, 5094-OW4ISXT

Safety Analog I/O Module Catalog Numbers 5094-IF4IHS, 5094-IF4IHSXT, 5094-OF4IHS, 5094-OF4IHSXT, 5094-IRT8S, 5094-IRT8SXT

Safety Specialty Module Catalog Numbers 5094-IJ2IS, 5094-IJ2ISXT

EtherNet/IP Adapter Catalog Numbers 5094-AENTR, 5094-AENTRXT, 5094-AEN2TR, 5094-AEN2TRXT, 5094-AENSFPR, 5094-AENSFPRXT, 5094-AEN2SFPR, 5094-AEN2SFPRXT

Mounting Base Catalog Numbers 5094-MB, 5094-MBXT

Removable Terminal Block Catalog Numbers 5094-RTB3, 5094-RTB3XT, 5094-RTB3S, 5094-RTB3SXT, 5094-RTB3T, 5094-RTB3TXT, 5094-RTB3TS, 5094-RTB3TSXT, 5094-RTB3W, 5094-RTB3WXT, 5094-RTB3WS, 5094-RTB3WSXT, 5094-RTB3I, 5094-RTB3IXT, 5094-RTB3IS, 5094-RTB3ISXT, 5094-RTB3IT, 5094-RTB3ITS, 5094-RTB3ITXT, 5094-RTB3ITSXT, 5094-RTB32V, 5094-RTB32VXT, 5094-RTB32VS, 5094-RTB32VSXT, 5094-RTB32C, 5094-RTB32CXT, 5094-RTB32CS, 5094-RTB32CSXT, 5094-RTB3AC, 5094-RTB3ACXT, 5094-RTB3ACS, 5094-RTB3ACSXT

Accessories Catalog Numbers 5094-STB, 5094-SAJMPR, 5094-N2, 5094-CE05, 5094-CE10, 5094-CE30

Topic	Page
Summary of Changes	2
Digital I/O Modules	3
Analog I/O Modules	27
Specialty Modules	52
Safety Digital I/O Modules	71
Safety Analog I/O Modules	83
Safety Specialty I/O Module	101
EtherNet/IP Adapters	108
Terminal Base Assemblies	112
Accessories	123

Summary of Changes

This publication contains the following new or updated information. This list includes substantive updates only and is not intended to reflect all changes.

Topic	Page
Updated wiring diagram description for 5094-IA16 and 5094-IA16XT	4
Updated wiring diagram description for 5094-IM8 and 5094-IM8XT	6
Corrected Input voltage range specification for 5094-IM8 and 5094-IM8XT	7
Added 5094-IJ2I and 5094-IJ2IXT modules	66, 112
Moved the 5094-IJ2IS and 5094-IJ2ISXT modules to a Safety Specialty Modules section	101
Updated UKEX/ATEX temp code for:	
• 5094-OB8, 5094-OB8XT	18
• 5094-IF8IH, 5094-IF8IHXT	45
• 5094-OF8IH, 5094-OF8IHXT	49
• 5094-HSC, 5094-HSCXT	58
• 5094-IB16S, 5094-IB16SXT	73
• 5094-OB16S, 5094-OB16SXT	77
• 5094-OW4IS, 5094-OW4ISXT	81
• 5094-IF4IHS, 5094-IF4IHSXT	87
• 5094-OF4IHS, 5094-OF4IHSXT	92
• 5094-IRT8S, 5094-IRT8SXT	99
• 5094-IJ2IS, 5094-IJ2ISXT	105
• 5094-AENTR, 5094-AENTRXT, 5094-AEN2TR, 5094-AEN2TRXT	109
• 5094-AENSFPR, 5094-AENSFPRXT, 5094-AEN2SFPR, 5094-AEN2SFPRXT	110
• 5094-CE05, 5094-CE10, 5094-CE30	125
Updated Environmental Specifications for:	
• FLEX 5000 I/O Digital Modules	25...26
• FLEX 5000 I/O Analog Modules	50
• 5094-HSC, 5094-HSCXT	58
• 5094-SERIAL, 5094-SERIALXT	64
• 5094-IB16S, 5094-IB16SXT	73
• 5094-OB16S, 5094-OB16SXT	77
• 5094-OW4IS, 5094-OW4ISXT	81
• 5094-IF4IHS, 5094-IF4IHSXT	88
• 5094-OF4IHS, 5094-OF4IHSXT	93
• 5094-IRT8S, 5094-IRT8SXT	99
• 5094-IJ2IS, 5094-IJ2ISXT	106
• FLEX 5000 EtherNet/IP Adapters	110
• FLEX 5000 Terminal Base Assemblies	122
• 5094-CE05, 5094-CE10, 5094-CE30	125
Updated Certifications for all modules	
• FLEX 5000 I/O Digital Modules	26
• FLEX 5000 I/O Analog Modules	50...51
• 5094-HSC, 5094-HSCXT	59
• 5094-SERIAL, 5094-SERIALXT	65
• 5094-IB16S, 5094-IB16SXT	74
• 5094-OB16S, 5094-OB16SXT	77...78
• 5094-OW4IS, 5094-OW4ISXT	81...82
• 5094-IF4IHS, 5094-IF4IHSXT	88...89
• 5094-OF4IHS, 5094-OF4IHSXT	93...94
• 5094-IRT8S, 5094-IRT8SXT	100

Topic	Page
• 5094-IJ2IS, 5094-IJ2ISXT	106...107
• FLEX 5000 EtherNet/IP Adapters	111
• FLEX 5000 Terminal Base Assemblies	123

Rockwell Automation recognizes that some of the terms that are currently used in our industry and in this publication are not in alignment with the movement toward inclusive language in technology. We are proactively collaborating with industry peers to find alternatives to such terms and making changes to our products and content. Please excuse the use of such terms in our content while we implement these changes.

The FLEX 5000® I/O architecture provides a wide range of input and output modules to span many applications, from high-speed digital to process control. The architecture uses Producer/Consumer technology that allows input information and output status to be shared among multiple Logix 5000® controllers.

FLEX 5000 I/O systems are used as remote I/O modules with Logix 5000 controllers such as ControlLogix® 5580, CompactLogix™ 5380, and CompactLogix 5480. The modules are configured with the Studio 5000 Logix Designer® application.

The I/O modules require a terminal base (TB) assembly to connect field-side wiring. A mounting base (MB) and removable terminal block (RTB) are referred to as a TB. Mounting bases (MBs) and removable terminal bases (RTBs) do not ship with the FLEX 5000 I/O modules. You must purchase a MB and a RTB individually for each I/O module.

TBs are mounted onto a zinc-plated chromate-passivated steel DIN rail such as the Allen-Bradley® 199-DR1; 46277-4; EN 60715 – 35 x 7.5 mm (1.38 x 0.30 in.). You must also install DIN rail end anchors (Allen-Bradley 1492-EAJ35 or 1492-EAHJ35) at both ends of your system for vibration or shock environments. The FLEX 5000 I/O system can be oriented in the following positions.

FLEX 5000 I/O System Mounting Orientations

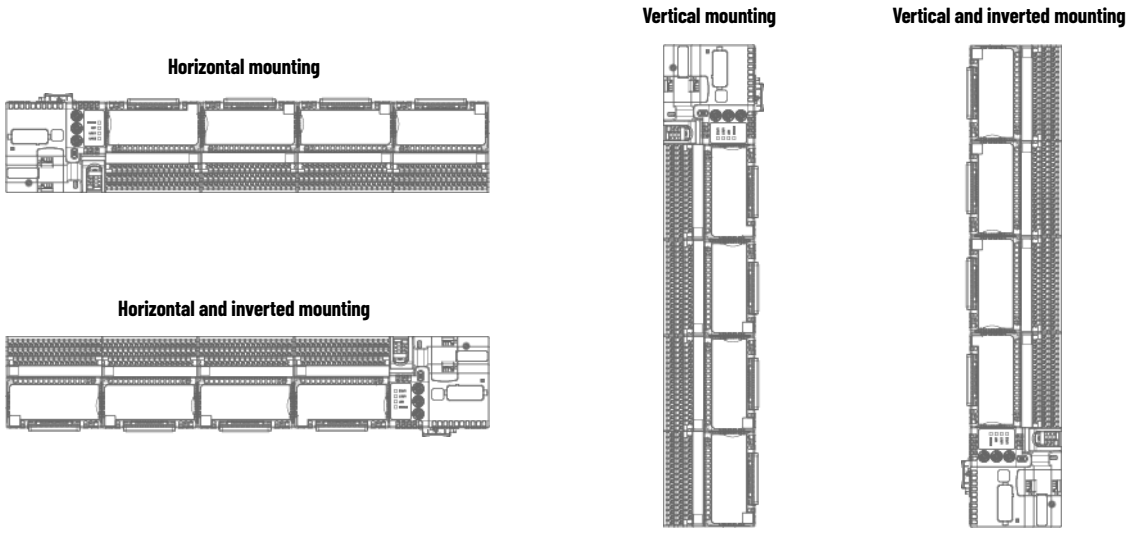

Maintain spacing from enclosure walls, wireways, and adjacent equipment. Allow 25.4 mm (1.00 in.) of space on all sides for adequate ventilation.

FLEX 5000 I/O modules support removal and insertion under power (RIUP), however you can leave only up to four consecutive empty slots.

Digital I/O Modules

I/O Type	Catalog Number	Description	Page
AC digital input	5094-IA16, 5094-IA16XT	120V AC 16-point input modules	4
	5094-IM8, 5094-IM8XT	240V AC 8-point input modules	6
DC digital input	5094-IB16, 5094-IB16XT	10...32V DC 16-point sinking input modules	8
	5094-IB32, 5094-IB32XT	10...32V DC 32-point sinking input modules	11
AC digital output	5094-OA16, 5094-OA16XT	120/240V AC 16-point output modules	13
DC digital output	5094-OB8, 5094-OB8XT	18...32V DC 8-point high current output modules	16
	5094-OB16, 5094-OB16XT	18...32V DC 16-point output modules	18
	5094-OB32, 5094-OB32XT	18...32V DC 32-point output modules	21
Relay output	5094-OW8I, 5094-OW8IXT	5...240V AC/125V DC 8-point isolated relay output modules	23

Environmental specifications and certifications for FLEX 5000 I/O digital modules are provided on page 25.

5094-IA16 and 5094-IA16XT Digital 16-channel 120V AC Input Modules

This figure shows a wiring diagram for the 5094-IA16 and 5094-IA16XT modules. You must connect a 120V AC power source to the left L1 and L2 terminals to provide field-side power.

5094-IA16 and 5094-IA16XT Wiring Diagram

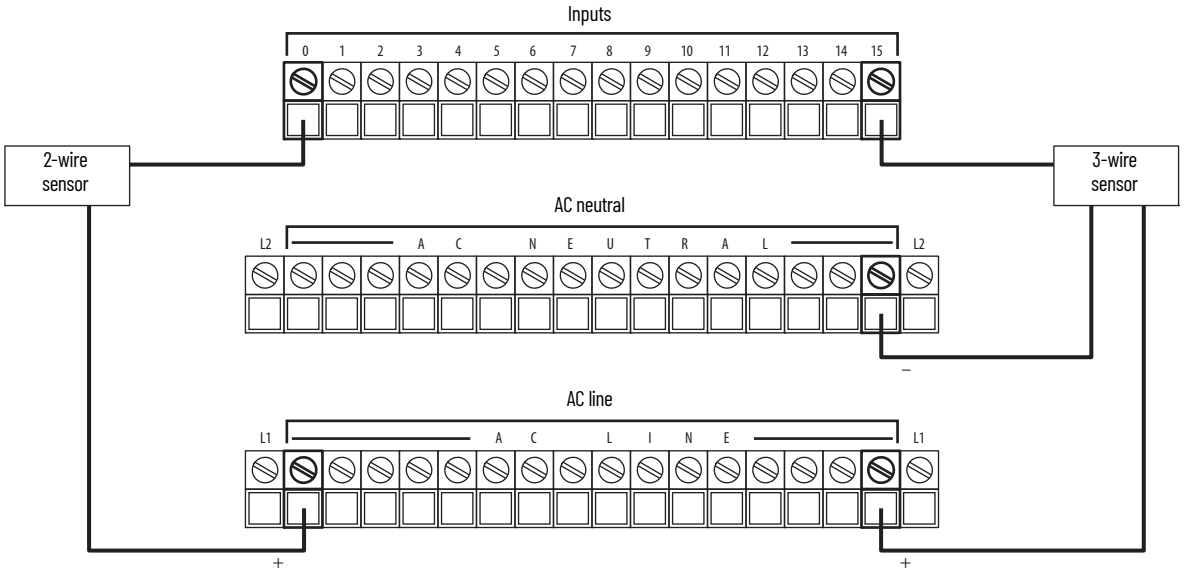

This figure shows a functional block diagram for the 5094-IA16 and 5094-IA16XT modules.

5094-IA16 and 5094-IA16XT Functional Block Diagram

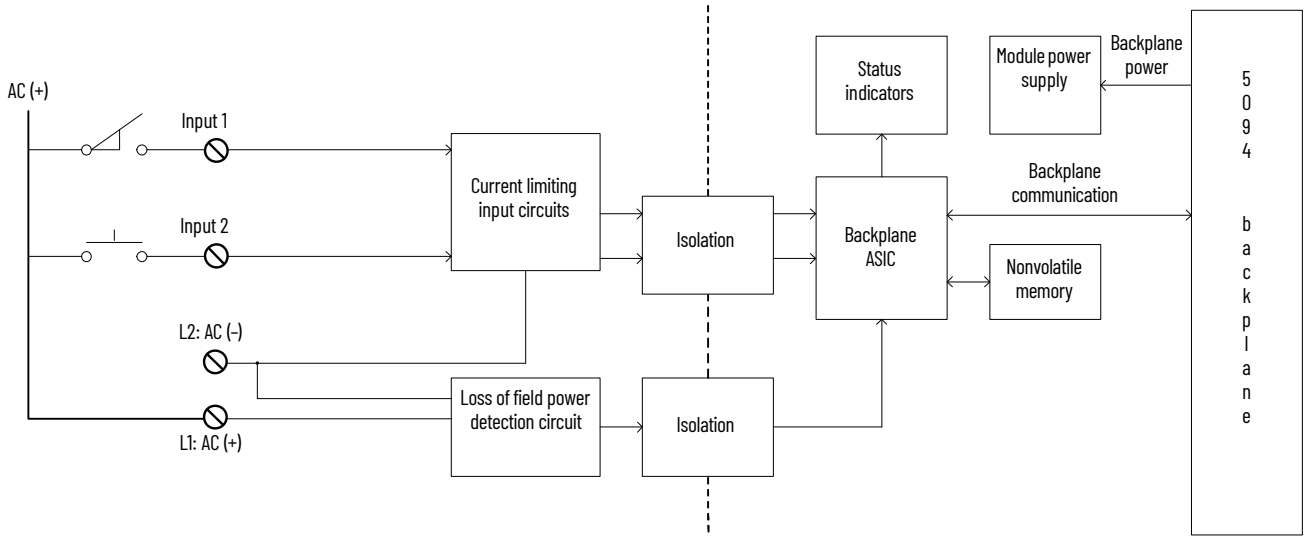

Technical Specifications - 5094-IA16, 5094-IA16XT

Attribute	5094-IA16, 5094-IA16XT
On-state voltage, min	74V AC
On-state voltage, nom	120V AC
On-state voltage, max	132V AC
Off-state voltage, max	20V AC
Input current per channel, max[1]	15 mA @ 120V AC, 50/60 Hz
On-state current, min	5 mA @ 74V AC
On-state current, nom	10 mA @ 120V AC/50 Hz 12 mA @ 120V AC/60 Hz
On-state current, max	15 mA @ 132V AC

Technical Specifications - 5094-IA16, 5094-IA16XT (Continued)

Attribute	5094-IA16, 5094-IA16XT
Off-state current, max	2.5 mA
Input impedance, min	8.8 kΩ @ 132V AC/63 Hz
Input impedance, nom	12 kΩ @ 120V AC/50 Hz 10 kΩ @ 120V AC/60 Hz
Input inrush current, max	600 mA
Input delay time (screw to backplane), max Off to On On to Off	 10 ms (typ) @ -40...+70 °C (-40...+158 °F) 10 ms (typ) @ -40...+70 °C (-40...+158 °F)
Input filter time Off to On On to Off	Hardware delay: 10 ms (typ) + filter time User-selectable filter time: 1 ms Hardware delay: 10 ms (typ) + filter time User-selectable filter time: 10 ms, 20 ms

(1) If you use this module in applications beyond 120V at high temperature, derating is required. See the Derating Chart for 5094-IA16 and 5094-IA16XT on page 5.

Derating Chart for 5094-IA16 and 5094-IA16XT

For applications that require operating beyond 120V at high temperature, see the following derating chart.

Derating by Input Voltage

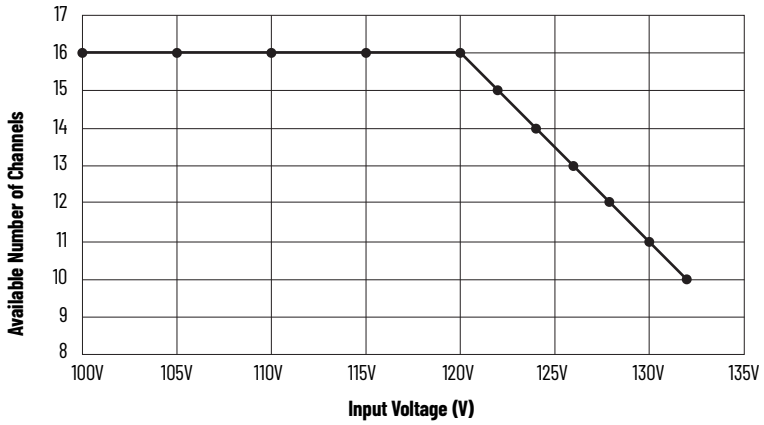

General Specifications - 5094-IA16, 5094-IA16XT

Attribute	5094-IA16, 5094-IA16XT
Inputs	16 channels (1 group of 16)
Voltage category	120V AC
Input voltage range	74...132V AC
Input voltage frequency	47...63 Hz
Backplane Power (BP) voltage	15V DC
Backplane Power (BP) current, max	75 mA
Sensor Actuator Power (SA) voltage range	74...132V AC, 47...63 Hz
Sensor Actuator Power (SA) current, max	250 mA @ 120V AC, 50/60 Hz
Power dissipation, max(1)	3.5 W
Thermal dissipation, max(1)	11.9 BTU/hr
Isolation voltage	250V (continuous), Reinforced Insulation Type, System to Field No isolation between SA power and input ports No isolation between individual input ports
Module keying	Mechanical keying or electronic keying via programming software
Indicators	1 green/red module status indicator 1 green/red SA power status indicator 16 yellow/red I/O status indicators
Terminal base (TB) assembly	**IMPORTANT:** Mounting bases (MBs) and removable terminal bases (RTBs) do not ship with the FLEX 5000 I/O modules. You must purchase a MB and a RTB individually for each I/O module. 5094-MB plus 5094-RTB3AC (referred to in documentation as a non-orderable 5094-TB3AC) 5094-MB plus 5094-RTB3ACS (referred to in documentation as a non-orderable 5094-TB3ACS) 5094-MBXT plus 5094-RTB3ACXT (referred to in documentation as a non-orderable 5094-TB3ACXT) 5094-MBXT plus 5094-RTB3ACSXT (referred to in documentation as a non-orderable 5094-TB3ACSXT)

General Specifications - 5094-IA16, 5094-IA16XT (Continued)

Attribute	5094-IA16, 5094-IA16XT
TB keying	4 ⊘⊘ 4
Supported mounting orientation	Horizontal, horizontal and inverted, vertical, vertical and inverted
Wire category(2)	2 - signal ports 2 - power ports
Wire size - Signal	0.34...2.5 mm^2 (22...14 AWG) solid or stranded copper wire that is rated at 105 °C (221 °F), or greater, 1.2 mm (3/64 in.) insulation, max Ferrule according to DIN 46 228/1.
Wire size - Power	2.5 mm^2 (14 AWG) Cu multi-strand
Dimensions (HxWxD), approx	54.0 x 94.0 x 87.0 mm (2.13 x 3.70 x 3.43 in.)
Weight, approx	151 g (0.33 lb)
Enclosure type	None (open-style)
North American temp code	T4
UKEX/ATEX temp code	T4
IECEx temp code	T4

(1) Value is measured at 70 °C (158 °F). Power dissipation varies with temperature.
(2) Use this Conductor Category information for planning conductor routing. See the Industrial Automation Wiring and Grounding Guidelines, publication 1770-4.1.
Use this Conductor Category information for planning conductor routing as described in the appropriate System Level Installation Manual.

5094-IM8 and 5094-IM8XT Digital 8-channel 240V AC Input Modules

This figure shows a wiring diagram for the 5094-IM8 and 5094-IM8XT modules. You must connect a 240V AC power source to the left L1 and L2 terminals to provide field-side power.

5094-IM8 and 5094-IM8XT Wiring Diagram

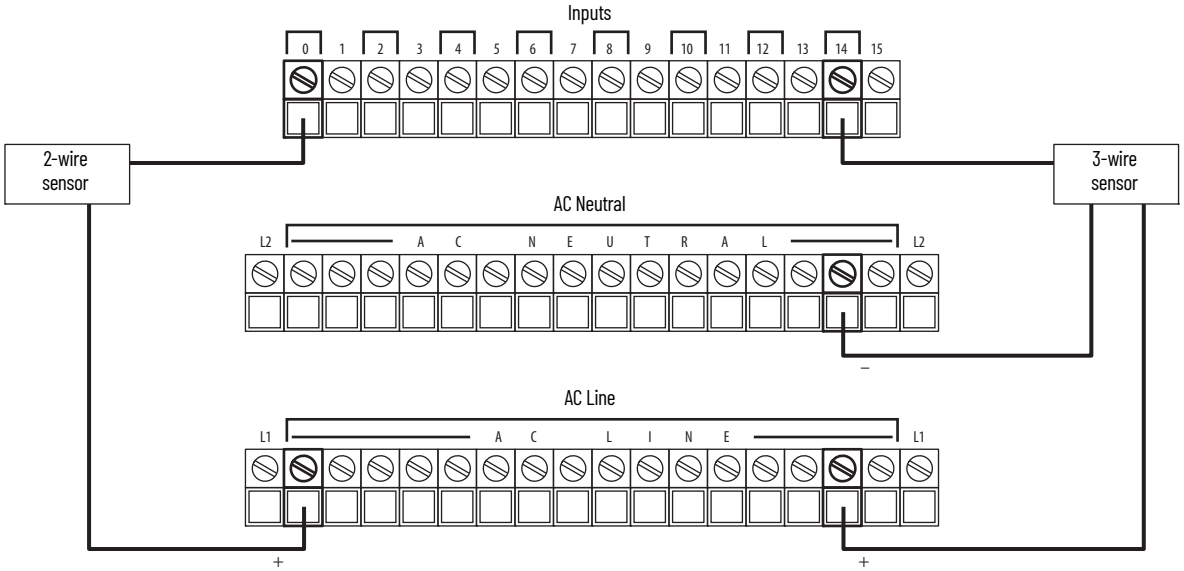

This figure shows a functional block diagram for the 5094-IM8 and 5094-IM8XT modules.

5094-IM8 and 5094-IM8XT Functional Block Diagram

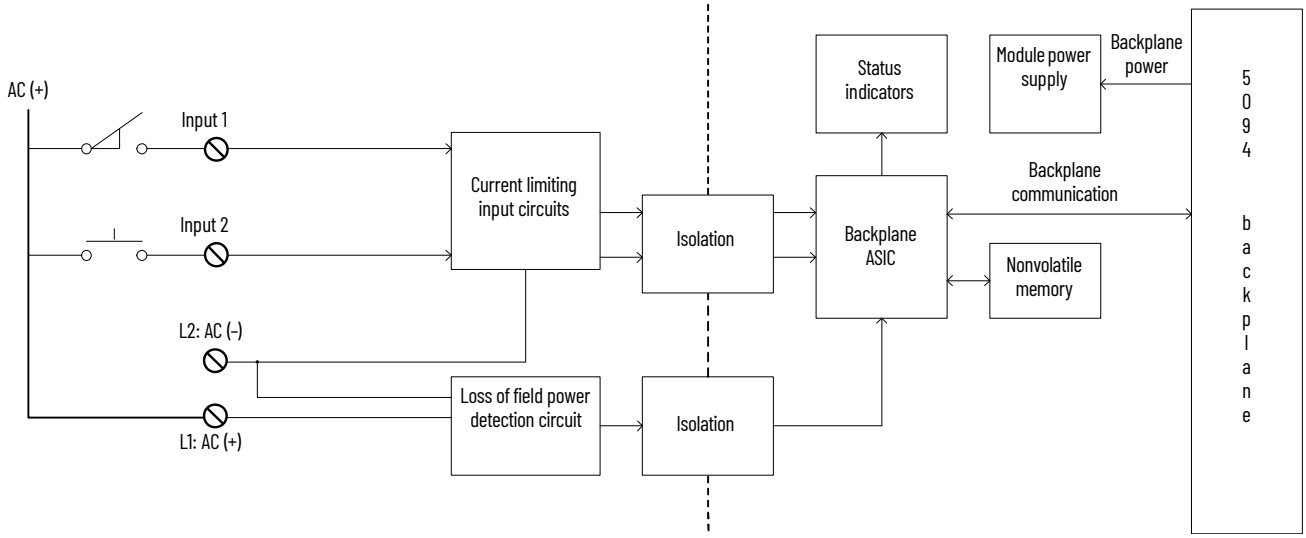

Technical Specifications - 5094-IM8, 5094-IM8XT

Attribute	5094-IM8, 5094-IM8XT
On-state voltage, min	159V AC
On-state voltage, nom	240V AC
On-state voltage, max	264V AC
Off-state voltage, max	40V AC
Input current per channel, max	15 mA @ 240V AC, 50/60 Hz
On-state current, min	5 mA @ 159V AC
On-state current, nom	9 mA @ 240V AC/50 Hz 11 mA @ 240V AC/60 Hz
On-state current, max	15 mA @ 264V AC
Off-state current, max	2.5 mA
Input impedance, min	17.6 kΩ @ 264V AC/63 Hz
Input impedance, nom	27 kΩ @ 240V AC/50 Hz 22 kΩ @ 240V AC/60 Hz
Input inrush current, max	600 mA
Input delay time (screw to backplane), max Off to On On to Off	 10 ms (typ) @ -40...+70 °C (-40...+158 °F) 10 ms (typ) @ -40...+70 °C (-40...+158 °F)
Input filter time Off to On On to Off	Hardware delay: 10 ms (typ) + filter time User-selectable filter time: 1 ms, 2 ms, 5 ms Hardware delay: 10 ms (typ) + filter time User-selectable filter time: 5 ms, 10 ms, 20 ms

General Specifications - 5094-IM8, 5094-IM8XT

Attribute	5094-IM8, 5094-IM8XT
Inputs	8 channels (1 group of 8)
Voltage category	240V AC
Input voltage range	159...264V AC
Input voltage frequency	47...63 Hz
Backplane Power (BP) voltage	15V DC
Backplane Power (BP) current, max	75 mA
Sensor Actuator Power (SA) voltage range	159...264V AC, 47...63 Hz
Sensor Actuator Power (SA) current, max	130 mA @ 240V AC, 50/60 Hz
Power dissipation, max(1)	2.8 W
Thermal dissipation, max(1)	9.55 BTU/hr

General Specifications - 5094-IM8, 5094-IM8XT (Continued)

Attribute	5094-IM8, 5094-IM8XT
Isolation voltage	250V (continuous), Reinforced Insulation Type, System to Field No isolation between SA power and input ports No isolation between individual input ports
Module keying	Mechanical keying or electronic keying via programming software
Indicators	1 green/red module status indicator 1 green/red SA power status indicator 8 yellow/red I/O status indicators
Terminal base (TB) assembly	**IMPORTANT:** Mounting bases (MBs) and removable terminal bases (RTBs) do not ship with the FLEX 5000 I/O modules. You must purchase a MB and a RTB individually for each I/O module. 5094-MB plus 5094-RTB3AC (referred to in documentation as a non-orderable 5094-TB3AC) 5094-MB plus 5094-RTB3ACS (referred to in documentation as a non-orderable 5094-TB3ACS) 5094-MBXT plus 5094-RTB3ACXT (referred to in documentation as a non-orderable 5094-TB3ACXT) 5094-MBXT plus 5094-RTB3ACSXT (referred to in documentation as a non-orderable 5094-TB3ACSXT)
TB keying	4 ⊗ ⊗ 2
Supported mounting orientation	Horizontal, horizontal and inverted, vertical, vertical and inverted
Wire category(2)	2 - signal ports 2 - power ports
Wire size - Signal	0.34...2.5 mm^2 (22...14 AWG) solid or stranded copper wire that is rated at 105 °C (221 °F), or greater, 1.2 mm (3/64 in.) insulation, max Ferrule according to DIN 46 228/1.
Wire size - Power	2.5 mm^2 (14 AWG) Cu multi-strand
Dimensions (HxWxD), approx	54.0 x 94.0 x 87.0 mm (2.13 x 3.70 x 3.43 in.)
Weight, approx	121 g (0.27 lb)
Enclosure type	None (open-style)
North American temp code	T4
UKEX/ATEX temp code	T4
IECEx temp code	T4

(1) Value is measured at 70 °C (158 °F). Power dissipation varies with temperature.
(2) Use this Conductor Category information for planning conductor routing. See the Industrial Automation Wiring and Grounding Guidelines, publication 1770-4.1.
Use this Conductor Category information for planning conductor routing as described in the appropriate System Level Installation Manual.

5094-IB16 and 5094-IB16XT Digital 16-point Sinking Input Modules

This figure shows a wiring diagram for the 5094-IB16 and 5094-IB16XT modules. You must connect a 24V DC power source to the left SA+/– terminals to provide field-side power.

5094-IB16 and 5094-IB16XT Wiring Diagram

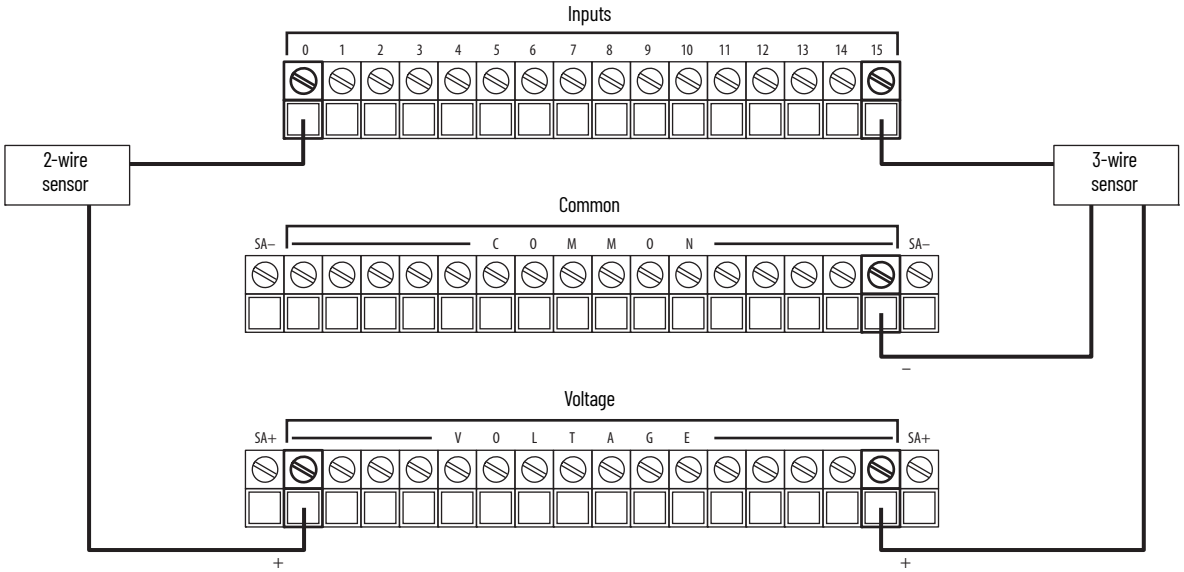

IMPORTANT: The 5094-IB16 and 5094-IB16XT module inputs use a shared common. The inputs have a return through internal module circuitry to the SA (–) terminal on the terminal base.

This figure shows a functional block diagram for the 5094-IB16 and 5094-IB16XT modules.

5094-IB16 and 5094-IB16XT Functional Block Diagram

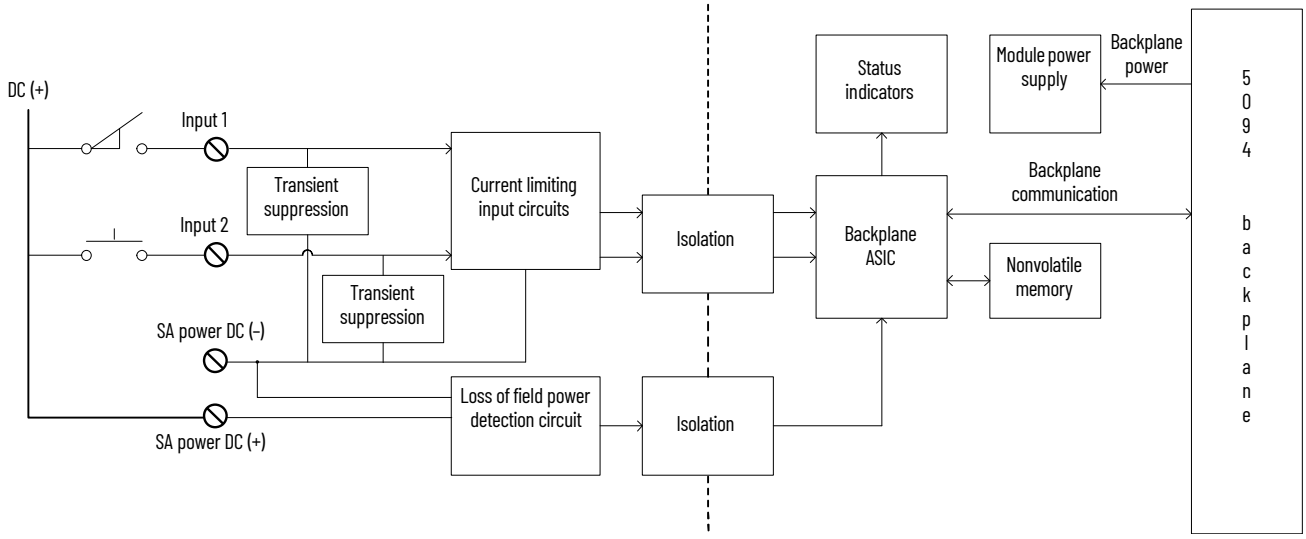

Technical Specifications - 5094-IB16, 5094-IB16XT

Attribute	5094-IB16, 5094-IB16XT
On-state voltage range	10...32V DC
On-state current, min	2 mA @ 10V DC
On-state current, nom	6 mA @ 24V DC
On-state current, max	8 mA @ 32V DC
Off-state voltage, max	5V DC
Off-state current, max	1.5 mA
Input impedance, min	1.3 kΩ @ 10V DC
Input impedance, nom	4 kΩ @ 24V DC
Input impedance, max	7.4 kΩ @ 32V DC
Module inrush current, max	250 mA peak (decaying to 37% in 22 ms, without activation)
Input delay time (screw to backplane), max Off to On On to Off	 100 µs @ 25 °C (77 °F) 100 µs @ 25 °C (77 °F)
Input drift over temperature span	±300 ns/ °C (±166.6 ns/ °F) from -40...+70 °C (-40...+158 °F)
Input min pulse width Off to On On to Off	 80 µs 80 µs
Input filter time Off to On On to Off	 Hardware delay: 98 µs + filter time User-selectable filter time: 0...50 ms Hardware delay: 98 µs + filter time User-selectable filter time: 0...50 ms
Reverse polarity protection	Yes
Overvoltage protection, max	36V (fuse protected, non-replaceable)
Pulse and period measurements	Not supported
Simple counters Counter frequency	0 - f_{max} = 500 Hz (inv period 2 ms) Channel 0...7 only
Timestamp of inputs	Yes
CIP Sync™	Transport clock, and slave only ordinary clock
Overrides	Not supported
Pulse latching	Supported
Events	Four events supported (triggered by any input or simple counters)
Pattern matching	Supported
Extended counters	Not supported

General Specifications - 5094-IB16, 5094-IB16XT

Attribute	5094-IB16, 5094-IB16XT
Inputs	16 channels (1 group of 16), sinking
Voltage category	12/24V DC sink
Input voltage range	10...32V DC
Backplane Power (BP) voltage	15V DC
Backplane Power (BP) current, max	80 mA
Sensor Actuator Power (SA) voltage range	18...32V DC
Sensor Actuator Power (SA) current, max	8 mA per channel 135 mA per module (128 mA + 7 mA for SA power detection)
Power dissipation, max(1)	3.5 W
Thermal dissipation, max(1)	11.9 BTU/hr
Isolation voltage	250V (continuous), Basic Insulation Type, System to Field No isolation between SA power and input ports No isolation between individual input ports
Module keying	Mechanical keying or electronic keying via programming software
Indicators	1 green/red module status indicator 1 green/red SA power status indicator 16 yellow/red I/O status indicators
Terminal base (TB) assembly	**IMPORTANT:** Mounting bases (MBs) and removable terminal bases (RTBs) do not ship with the FLEX 5000 I/O modules. You must purchase a MB and a RTB individually for each I/O module. 5094-MB plus 5094-RTB3 (referred to in documentation as a non-orderable 5094-TB3) 5094-MB plus 5094-RTB3S (referred to in documentation as a non-orderable 5094-TB3S) 5094-MBXT plus 5094-RTB3XT (referred to in documentation as a non-orderable 5094-TB3XT) 5094-MBXT plus 5094-RTB3SXT (referred to in documentation as a non-orderable 5094-TB3SXT)
TB keying	**1 ⓉⓉ 1**
Supported mounting orientation	Horizontal, horizontal and inverted, vertical, vertical and inverted
Wire category(2)	2 - signal ports 2 - power ports
Wire size - Signal	0.34...2.5 mm^2 (22...14 AWG) solid or stranded copper wire that is rated at 105 °C (221 °F), or greater, 1.2 mm (3/64 in.) insulation, max Ferrule according to DIN 46 228/1.
Wire size - Power	2.5 mm^2 (14 AWG) Cu multi-strand
Dimensions (HxWxD), approx	54.0 x 94.0 x 87.0 mm (2.13 x 3.70 x 3.43 in.)
Weight, approx	101 g (0.22 lb)
Enclosure type	None (open-style)
North American temp code	T4
UKEX/ATEX temp code	T4
IECEx temp code	T4

(1) Value is measured at 70 °C (158 °F). Power dissipation varies with temperature.
(2) Use this Conductor Category information for planning conductor routing. See the Industrial Automation Wiring and Grounding Guidelines, publication 1770-4.1.
Use this Conductor Category information for planning conductor routing as described in the appropriate System Level Installation Manual.

5094-IB32 and 5094-IB32XT Digital 32-point Sinking Input Modules

This figure shows a wiring diagram for the 5094-IB32 and 5094-IB32XT modules. You must connect a 24V DC power source to the left SA+/– terminals to provide field-side power.

5094-IB32 and 5094-IB32XT Wiring Diagram

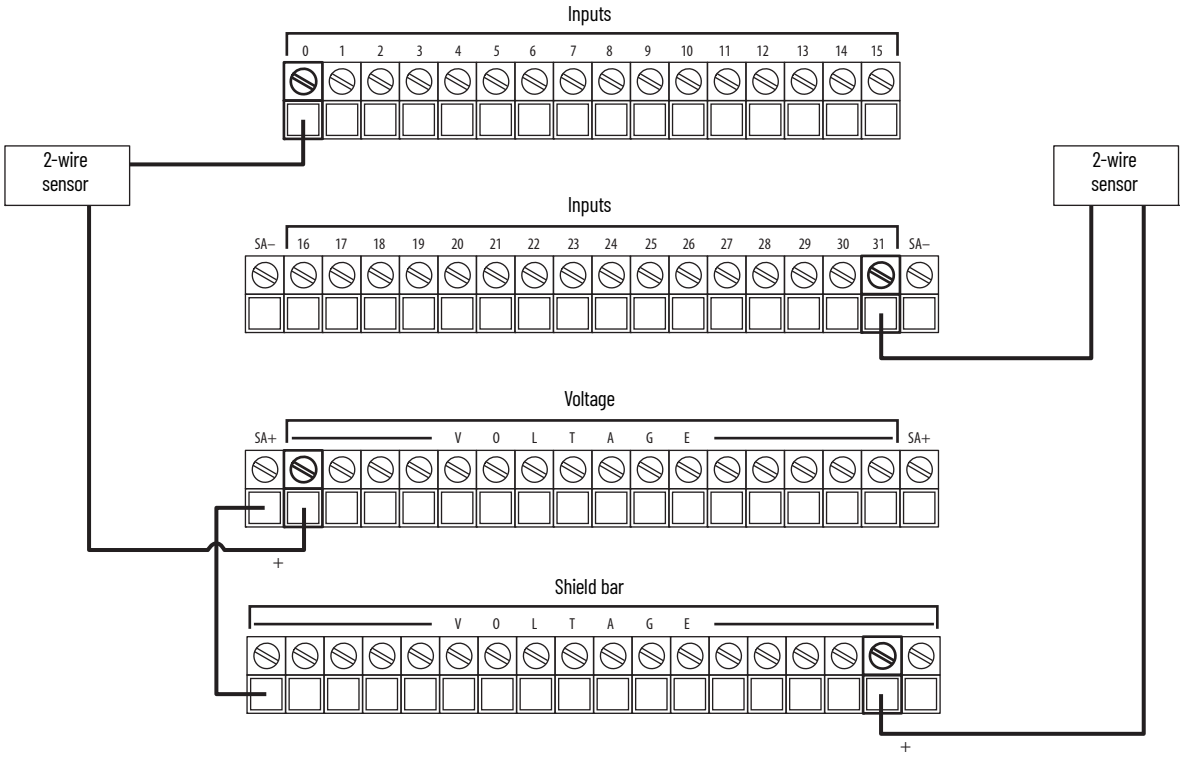

IMPORTANT: The 5094-IB32 and 5094-IB32XT module inputs use a shared common on the shield bar. The inputs have a return through internal module circuitry to the SA (–) terminal on the terminal base.

This figure shows a functional block diagram for the 5094-IB32 and 5094-IB32XT modules.

5094-IB32 and 5094-IB32XT Functional Block Diagram

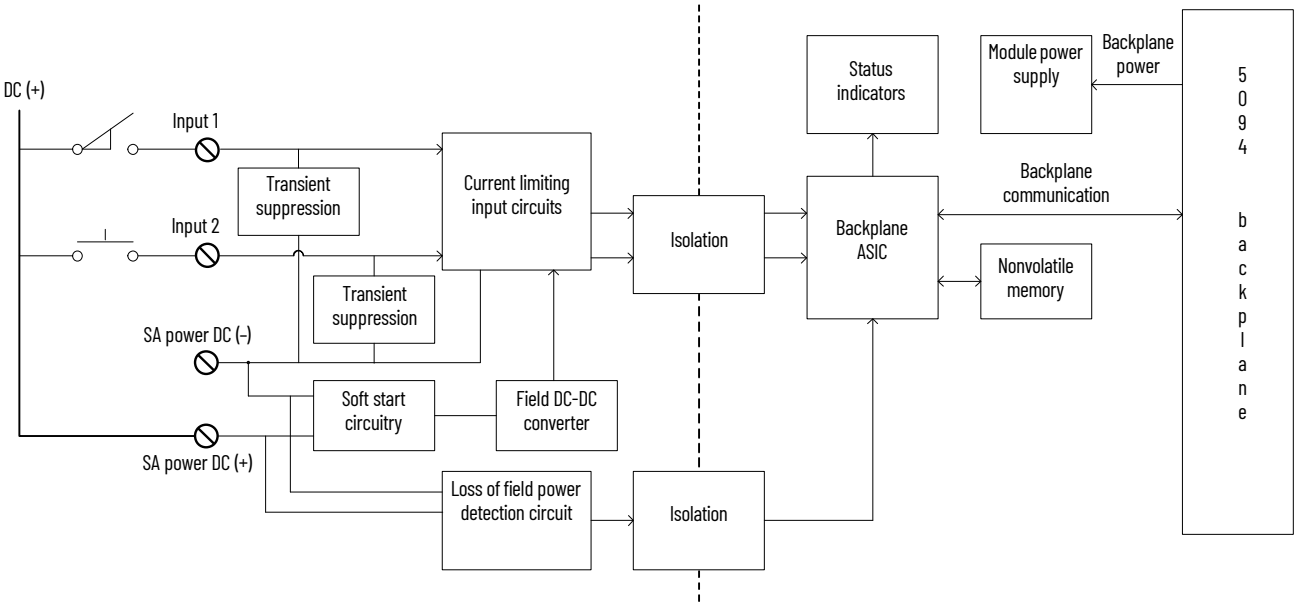

Technical Specifications - 5094-IB32, 5094-IB32XT

Attribute	5094-IB32, 5094-IB32XT
On-state voltage range	10...32V DC
On-state current, min	2 mA @ 10V DC
On-state current, nom	2.4 mA @ 24V DC
On-state current, max	2.6 mA @ 32V DC
Off-state voltage, max	5V DC
Off-state current, max	1.5 mA
Input impedance, min	3.8 kΩ @ 10V DC
Input impedance, nom	10 kΩ @ 24V DC
Input impedance, max	16 kΩ @ 32V DC
Module inrush current, max	250 mA peak (decaying to 37% in 22 ms, without activation)
Input delay time (screw to backplane), max Off to On On to Off	 150 µs @ 25 °C (77 °F) 150 µs @ 25 °C (77 °F)
Input drift over temperature span	±100 ns/ °C (±55.6 ns/ °F) from -40...+70 °C (-40...+158 °F)
Input min pulse width Off to On On to Off	 125 µs 125 µs
Input filter time Off to On On to Off	 Hardware delay: 98 µs + filter time User-selectable filter time: 0...50 ms Hardware delay: 98 µs + filter time User-selectable filter time: 0...50 ms
Reverse polarity protection	Yes
Overvoltage protection, max	36V (fuse protected, non-replaceable)
Pulse and period measurements	Not supported
Simple counters Counter frequency	0 - f_{max} = 4 kHz (inv period 0.25 ms) Channel 0...15 only
Timestamp of inputs	Yes, ±200 µs accuracy
CIP Sync	Transport clock, and slave only ordinary clock
Overrides	Not supported
Pulse latching	Supported
Events	Four events supported (triggered by any input on channels 0...15, or simple counters)
Pattern matching	Supported
Extended counters	Not supported

General Specifications - 5094-IB32, 5094-IB32XT

Attribute	5094-IB32, 5094-IB32XT
Inputs	32 channels (1 group of 32), sinking
Voltage category	12/24V DC sink
Input voltage range	10...32V DC
Backplane Power (BP) voltage	15V DC
Backplane Power (BP) current, max	90 mA
Sensor Actuator Power (SA) voltage range	18...32V DC
Sensor Actuator Power (SA) current, max	2.6 mA per point 100 mA per module
Power dissipation, max[1]	3.5 W
Thermal dissipation, max[1]	11.9 BTU/hr
Isolation voltage	250V (continuous), Basic Insulation Type, System to Field No isolation between SA power and input ports No isolation between individual input ports
Module keying	Mechanical keying or electronic keying via programming software
Indicators	1 green/red module status indicator 1 green/red SA power status indicator 32 yellow/red I/O status indicators
Terminal base (TB) assembly	**IMPORTANT:** Mounting bases (MBs) and removable terminal bases (RTBs) do not ship with the FLEX 5000 I/O modules. You must purchase a MB and a RTB individually for each I/O module. 5094-MB plus 5094-RTB32V (referred to in documentation as a non-orderable 5094-TB32V) 5094-MB plus 5094-RTB32VS (referred to in documentation as a non-orderable 5094-TB32VS) 5094-MBXT plus 5094-RTB32VXT (referred to in documentation as a non-orderable 5094-TB32VXT) 5094-MBXT plus 5094-RTB32VSXT (referred to in documentation as a non-orderable 5094-TB32VSXT)

General Specifications - 5094-IB32, 5094-IB32XT (Continued)

Attribute	5094-IB32, 5094-IB32XT
TB keying	1 ⓉⓋ 4
Supported mounting orientation	Horizontal, horizontal and inverted, vertical, vertical and inverted
Wire category(2)	2 - signal ports 2 - power ports
Wire size - Signal	0.34...2.5 mm^2 (22...14 AWG) solid or stranded copper wire that is rated at 105 °C (221 °F), or greater, 1.2 mm (3/64 in.) insulation, max Ferrule according to DIN 46 228/1.
Wire size - Power	2.5 mm^2 (14 AWG) Cu multi-strand
Dimensions (HxWxD), approx	54.0 x 94.0 x 87.0 mm (2.13 x 3.70 x 3.43 in.)
Weight, approx	133 g (0.29 lb)
Enclosure type	None (open-style)
North American temp code	T4
UKEX/ATEX temp code	T4
IECEx temp code	T4

(1) Value is measured at 70 °C (158 °F). Power dissipation varies with temperature.
(2) Use this Conductor Category information for planning conductor routing. See the Industrial Automation Wiring and Grounding Guidelines, publication 1770-4.1.
Use this Conductor Category information for planning conductor routing as described in the appropriate System Level Installation Manual.

5094-OA16 and 5094-OA16XT Digital 16-channel 120/240V AC Output Modules

This figure shows a wiring diagram for the 5094-OA16 and 5094-OA16XT modules. You must connect a 120/240V AC power source to the left L1 and L2 terminals to provide field-side power.

5094-OA16 and 5094-OA16XT Wiring Diagram

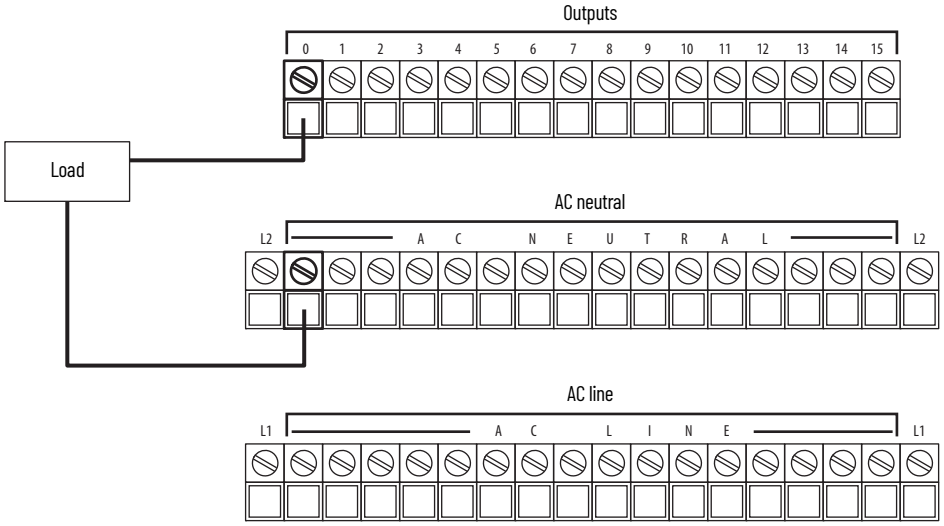

This figure shows a functional block diagram for the 5094-OA16 and 5094-OA16XT modules.

5094-OA16 and 5094-OA16XT Functional Block Diagram

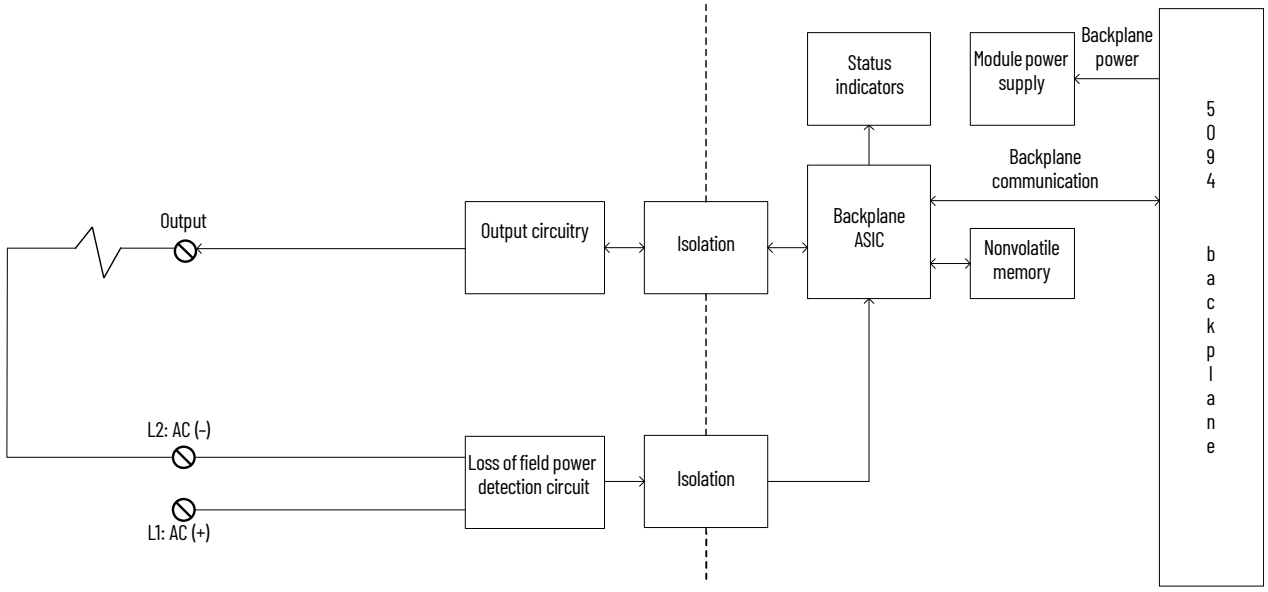

Technical Specifications - 5094-OA16, 5094-OA16XT

Attribute	5094-OA16, 5094-OA16XT
On-state voltage, min	85V AC
On-state voltage, nom	120/240V AC
On-state voltage, max	264V AC
On-state voltage drop, max	1.5V AC @ 0.5 A
Output current per channel, max	0.5 A
Output current per module, max	4 A
On-state current, min	5 mA
Off-state leakage current, max	1 mA
Surge current per point, max	5 A for 25 ms, repeatable every 2 s 7 A for 40 ms, repeatable every 8 s
Output delay time (backplane to screw), max Off to On On to Off	 1/2 cycle time (typ) @ -40...+70 °C (-40...+158 °F) 1/2 cycle time (typ) @ -40...+70 °C (-40...+158 °F)
Field power loss detection	Yes
Open load detection diagnostics	Not supported
Output short circuit/overload/overtemp detection	Not supported
Output short circuit/overload protection	Not supported
Reverse voltage protection	Not supported
Overvoltage protection, max	Not supported
Pilot duty rating	0.5 A resistive and general pilot duty
Output states in program mode per point	Hold Last State On Off (default)
Output states in fault mode per point	Hold Last State On Off (default)
Duration of fault mode per point	1 s 2 s 5 s 10 s Forever (default)
Output final state after fault mode per point	On Off (default)
Scheduled outputs	Not supported
CIP Sync	Supported

General Specifications - 5094-OA16, 5094-OA16XT

Attribute	5094-OA16, 5094-OA16XT
Outputs	16 channels (1 group of 16), sourcing
Voltage category	120/240V AC
Output voltage range	85...264V AC
Backplane Power (BP) voltage	15V DC
Backplane Power (BP) current, max	100 mA
Sensor Actuator Power (SA) voltage range	85...264V AC, 47...63 Hz
Sensor Actuator Power (SA) current, max	4 A @ 120/240V AC, 50/60 Hz
Power dissipation, max	3.5 W
Thermal dissipation, max	11.9 BTU/hr
Isolation voltage	250V (continuous), Reinforced Insulation Type, System to Field No isolation between SA power and Output ports No isolation between individual Output ports
Module keying	Mechanical keying or electronic keying via programming software.
Indicators	1 green/red module status indicator 1 green/red SA power status indicator 16 yellow/red I/O status indicators
Terminal base (TB) assembly	**IMPORTANT:** Mounting bases (MBs) and removable terminal bases (RTBs) do not ship with the FLEX 5000 I/O modules. You must purchase a MB and a RTB individually for each I/O module. 5094-MB plus 5094-RTB3AC (referred to in documentation as a non-orderable 5094-TB3AC) 5094-MB plus 5094-RTB3ACS (referred to in documentation as a non-orderable 5094-TB3ACS) 5094-MBXT plus 5094-RTB3ACXT (referred to in documentation as a non-orderable 5094-TB3ACXT) 5094-MBXT plus 5094-RTB3ACSXT (referred to in documentation as a non-orderable 5094-TB3ACSXT)
TB keying	**4 ⊗⊗ 3**
Supported mounting orientation	Horizontal, horizontal and inverted, vertical, vertical and inverted.
Wire category(1)	2 - signal ports 2 - power ports
Wire size - Signal	0.34...2.5 mm^2 (22...14 AWG) solid or stranded copper wire that is rated at 105 °C (221 °F), or greater, 1.2 mm (3/64 in.) insulation, max Ferrule according to DIN 46 228/1.
Wire size - Power	2.5 mm^2 (14 AWG) Cu multi-strand
Dimensions (HxWxD), approx	54.0 x 94.0 x 87.0 mm (2.13 x 3.70 x 3.43 in.)
Weight, approx	138 g (0.30 lb)
Enclosure type	None (open - style)
North American temp code	T4
UKEX/ATEX temp code	T4
IECEx temp code	T4

(1) Use this Conductor Category information for planning conductor routing. See the Industrial Automation Wiring and Grounding Guidelines, publication 1770-4.1.
Use this Conductor Category information for planning conductor routing as described in the appropriate System Level Installation Manual.

5094-OB8 and 5094-OB8XT Digital 8-point High Current Output Modules

This figure shows a wiring diagram for the 5094-OB8 and 5094-OB8XT modules. You must connect a 24V DC power source to the left SA+/– terminals to provide field-side power.

5094-OB8 and 5094-OB8XT Wiring Diagram

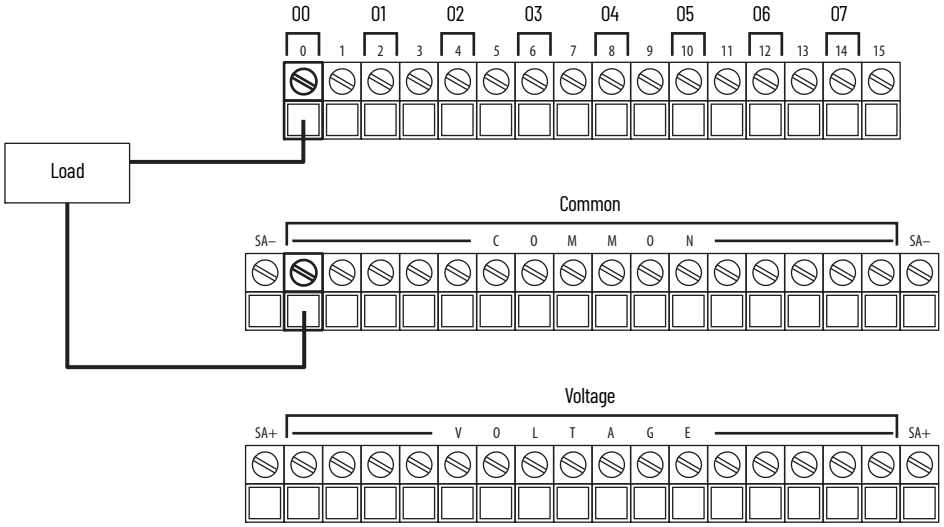

This figure shows a functional block diagram for the 5094-OB8 and 5094-OB8XT modules.

5094-OB8 and 5094-OB8XT Functional Block Diagram

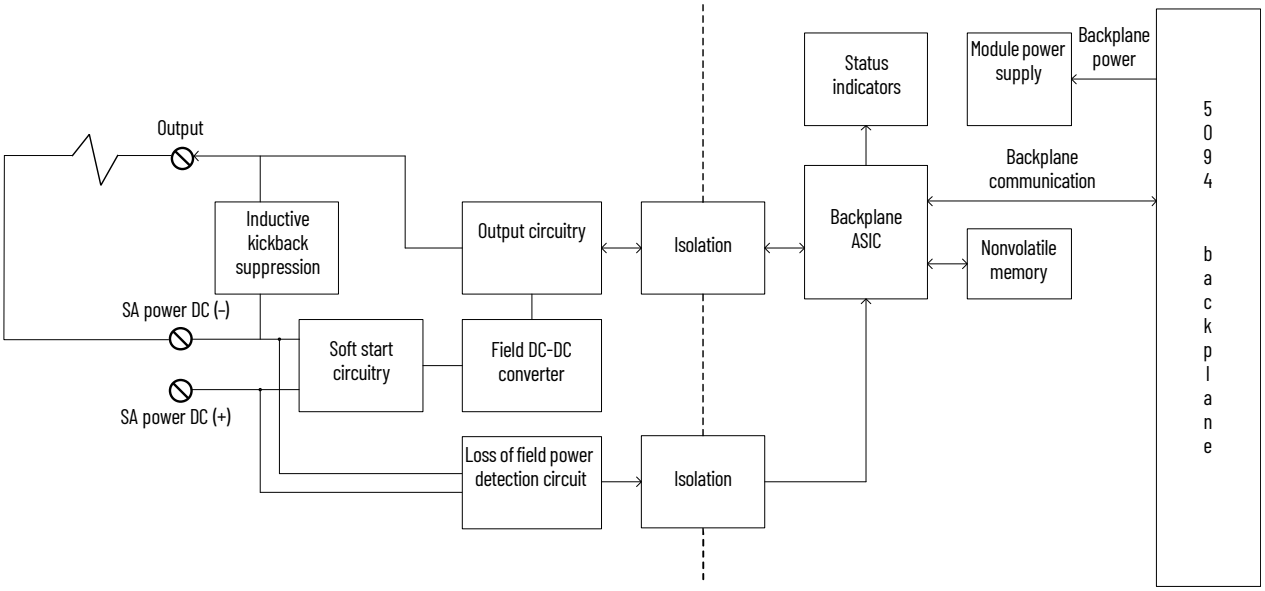

Technical Specifications - 5094-OB8, 5094-OB8XT

Attribute	5094-OB8, 5094-OB8XT
On-state voltage range	18...32V DC
On-state voltage drop, max	0.25V DC
On-state current per channel, min	1 mA
Off-state voltage, max	5V DC with 1 mA min load
Off-state leakage current per point, max(1) (2)	0.5 mA
Output current rating per channel, max	2 A
Output current rating per module, max	10 A
Surge current per point, max	4.8 A for 50 ms, repeatable every 2 s
Fast inductive load turn-off	Yes
Inductive load allowed, max	1.2 H
Output clamping voltage for inductive load when turned off	SA voltage - 44V (typical -20V when SA is 24V)
Output delay time (backplane to screw), max Off to On On to Off	 100 µs @ 25 °C (77 °F) @ 0.5 A 100 µs @ 25 °C (77 °F) @ 0.5 A
Pulse width, min	≤ 200 µs (T_{on} + T_{off}) @ 0.5 A @ 25 °C (77 °F)
Output drift over temperature span	±400 ns/°C (±222.2 ns/°F) from -40...+70 °C (-40...+158 °F) @ 0.5 A
Field power loss detection	Yes
Open load detection diagnostics(3)	Yes
Output short circuit/overload/overtemp detection(4)	Yes
Output short circuit/overload protection	Yes
Reverse voltage protection	Yes
Overvoltage protection, max	36V (fuse protected, non-replaceable)
Pilot duty rating	2 A resistive and general pilot duty
Output states in program mode per point	Hold Last State On Off (default)
Output states in fault mode per point	Hold Last State On Off (default)
Duration of fault mode per point	1 s 2 s 5 s 10 s Forever (default)
Output final state after fault mode per point	On Off (default)
Scheduled outputs	Not supported
CIP Sync	Supported

(1) Recommended Loading Resistor - To limit the effects of leakage current through solid-state outputs, you can connect a loading resistor in parallel with your load. For 24V DC operation, use a 5.6 kΩ, 0.5 W resistor for transistor operation.
(2) Leakage current can be minimized by disabling Open load detection diagnostics.
(3) Diagnostic for the channel is active when the output is in the Off state.
(4) Diagnostic for the channel is active when the output is in the On state.

General Specifications - 5094-OB8, 5094-OB8XT

Attribute	5094-OB8, 5094-OB8XT
Outputs	8 channels (1 group of 8), sourcing
Voltage category	24V DC source
Output voltage range	18...32V DC
Backplane Power (BP) voltage	15V DC
Backplane Power (BP) current, max	70 mA
Sensor Actuator Power (SA) voltage range	18...32V DC
Sensor Actuator Power (SA) current, max	10 A per module
Power dissipation, max(1)	3.5 W (5 channels @ 2 A)
Thermal dissipation, max	13.65 BTU/hr
Isolation voltage	250V (continuous), Basic Insulation Type, System to Field No isolation between SA power and Output ports No isolation between individual Output ports
Module keying	Mechanical keying or electronic keying via programming software.

General Specifications - 5094-OB8, 5094-OB8XT (Continued)

Attribute	5094-OB8, 5094-OB8XT
Indicators	1 green/red module status indicator 1 green/red SA power status indicator 8 yellow/red I/O status indicators
Terminal base (TB) assembly	**IMPORTANT:** Mounting bases (MBs) and removable terminal bases (RTBs) do not ship with the FLEX 5000 I/O modules. You must purchase a MB and a RTB individually for each I/O module. 5094-MB plus 5094-RTB3 (referred to in documentation as a non-orderable 5094-TB3) 5094-MB plus 5094-RTB3S (referred to in documentation as a non-orderable 5094-TB3S) 5094-MBXT plus 5094-RTB3XT (referred to in documentation as a non-orderable 5094-TB3XT) 5094-MBXT plus 5094-RTB3SXT (referred to in documentation as a non-orderable 5094-TB3SXT)
TB keying	1 ⓣⓥ 3
Supported mounting orientation	Horizontal, horizontal and inverted, vertical, vertical and inverted.
Wire category(2)	2 - signal ports 2 - power ports
Wire size - Signal	0.34...2.5 mm^2 (22...14 AWG) solid or stranded copper wire that is rated at 105 °C (221 °F), or greater, 1.2 mm (3/64 in.) insulation, max Ferrule according to DIN 46 228/1.
Wire size - Power	2.5 mm^2 (14 AWG) Cu multi-strand
Dimensions (HxWxD), approx	54.0 x 94.0 x 87.0 mm (2.13 x 3.70 x 3.43 in.)
Weight, approx	110 g (0.24 lb)
Enclosure type	None (open - style)
North American temp code	T4
UKEX/ATEX temp code	T4
IECEx temp code	T4

(1) Value is measured at 70 °C (158 °F). Power dissipation varies with temperature.
(2) Use this Conductor Category information for planning conductor routing. See the Industrial Automation Wiring and Grounding Guidelines, publication 1770-4.1.
Use this Conductor Category information for planning conductor routing as described in the appropriate System Level Installation Manual.

5094-OB16 and 5094-OB16XT Digital 16-point Sourcing Output Modules

This figure shows a wiring diagram for the 5094-OB16 and 5094-OB16XT modules. You must connect a 24V DC power source to the left SA+/– terminals to provide field-side power.

5094-OB16 and 5094-OB16XT Wiring Diagram

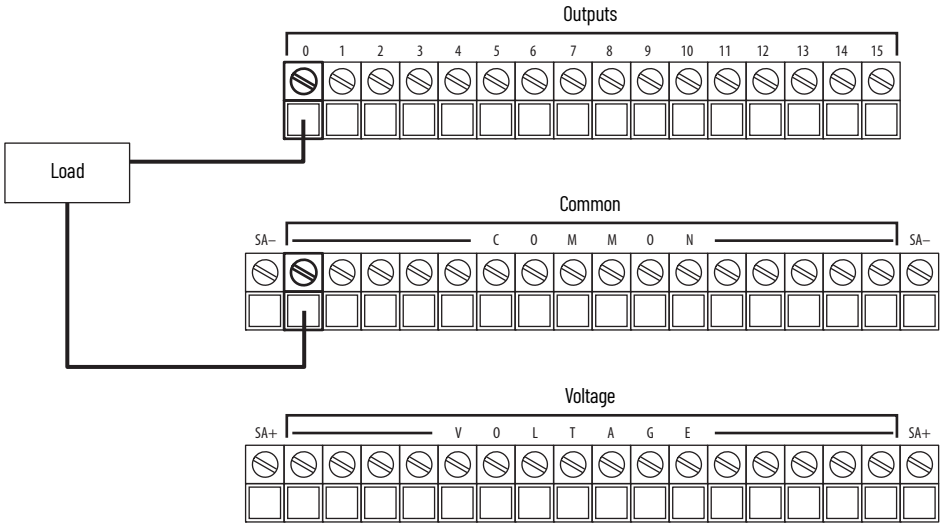

This figure shows a functional block diagram for the 5094-OB16 and 5094-OB16XT modules.

5094-OB16 and 5094-OB16XT Functional Block Diagram

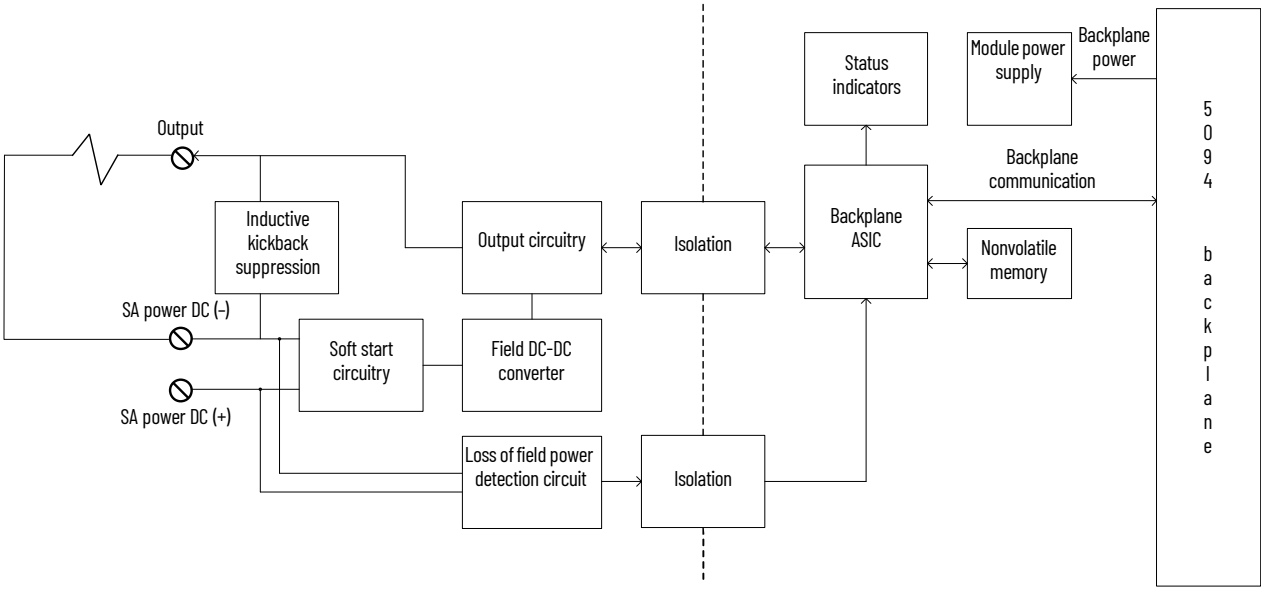

Technical Specifications - 5094-OB16, 5094-OB16XT

Attribute	5094-OB16, 5094-OB16XT
On-state voltage range	18...32V DC
On-state voltage drop, max	0.25V DC
On-state current per channel, min	1 mA
Off-state voltage, max	5V DC with 1 mA min load
Off-state leakage current per point, max[1]	0.5 mA per point
Output current rating, max	0.5 A per channel
Surge current per point	1 A max for 10 ms per point, repeatable every 2 s
Output delay time (backplane to screw), max Off to On On to Off	 100 µs @ 25 °C (77 °F) @ 0.5 A 100 µs @ 25 °C (77 °F) @ 0.5 A
Pulse width, min	≤ 200 µs (T_{on} + T_{off}) @ 0.5 A @ 25 °C (77 °F)
Output drift over temperature span	±400 ns/°C (±222.2 ns/°F) from -40...+70 °C (-40...+158 °F) @ 0.5 A
Open load detection diagnostics[2]	Yes
Output short circuit/overload/overtemp detection[3]	Yes
Output short circuit/overload protection	Yes
Reverse voltage protection	Yes
Overvoltage protection, max	36V (fuse protected, non-replaceable)
Pilot duty rating	0.5 A resistive and general pilot duty
Output states in program mode per point	Hold Last State On Off (default)
Output states in fault mode per point	Hold Last State On Off (default)
Duration of fault mode per point	1 s 2 s 5 s 10 s Forever (default)

Technical Specifications - 5094-OB16, 5094-OB16XT (Continued)

Attribute	5094-OB16, 5094-OB16XT
Output final state after fault mode per point	On Off (default)
Scheduled outputs	Supported
CIP Sync	Supported

(1) Recommended Loading Resistor - To limit the effects of leakage current through solid-state outputs, you can connect a loading resistor in parallel with your load. For 24V DC operation, use a 5.6 kΩ, 0.5 W resistor for transistor operation.
(2) Diagnostic for the channel is active when the output is in the Off state.
(3) Diagnostic for the channel is active when the output is in the On state.

General Specifications - 5094-OB16, 5094-OB16XT

Attribute	5094-OB16, 5094-OB16XT
Outputs	16 channels (1 group of 16), sourcing
Voltage category	24V DC source
Output voltage range	18...32V DC
Backplane Power (BP) voltage	15V DC
Backplane Power (BP) current, max	100 mA
Sensor Actuator Power (SA) voltage range	18...32V DC
Sensor Actuator Power (SA) current, max	8.1 A per module
Power dissipation, max	3.5 W (16 channels @ 0.5 A)
Thermal dissipation, max	12.97 BTU/hr
Isolation voltage	250V (continuous), Basic Insulation Type, System to Field No isolation between SA power and Output ports No isolation between individual Output ports
Module keying	Mechanical keying or electronic keying via programming software.
Indicators	1 green/red module status indicator 1 green/red SA power status indicator 16 yellow/red I/O status indicators
Terminal base (TB) assembly	**IMPORTANT:** Mounting bases (MBs) and removable terminal bases (RTBs) do not ship with the FLEX 5000 I/O modules. You must purchase a MB and a RTB individually for each I/O module. 5094-MB plus 5094-RTB3 (referred to in documentation as a non-orderable 5094-TB3) 5094-MB plus 5094-RTB3S (referred to in documentation as a non-orderable 5094-TB3S) 5094-MBXT plus 5094-RTB3XT (referred to in documentation as a non-orderable 5094-TB3XT) 5094-MBXT plus 5094-RTB3SXT (referred to in documentation as a non-orderable 5094-TB3SXT)
TB keying	**1 Ⓣ Ⓐ 2**
Supported mounting orientation	Horizontal, horizontal and inverted, vertical, vertical and inverted.
Wire category(1)	2 - signal ports 2 - power ports
Wire size - Signal	0.34...2.5 mm^2 (22...14 AWG) solid or stranded copper wire that is rated at 105 °C (221 °F), or greater, 1.2 mm (3/64 in.) insulation, max Ferrule according to DIN 46 228/1.
Wire size - Power	2.5 mm^2 (14 AWG) Cu multi-strand
Dimensions (HxWxD), approx	54.0 x 94.0 x 87.0 mm (2.13 x 3.70 x 3.43 in.)
Weight, approx	105 g (0.23 lb)
Enclosure type	None (open - style)
North American temp code	T4
UKEX/ATEX temp code	T4
IECEx temp code	T4

(1) Use this Conductor Category information for planning conductor routing. See the Industrial Automation Wiring and Grounding Guidelines, publication 1770-4.1.
Use this Conductor Category information for planning conductor routing as described in the appropriate System Level Installation Manual.

5094-OB32 and 5094-OB32XT Digital 32-point Sourcing Output Modules

This figure shows a wiring diagram for the 5094-OB32 and 5094-OB32XT modules. You must connect a 24V DC power source to the left SA+/– terminals to provide field-side power.

5094-OB32 and 5094-OB32XT Wiring Diagram

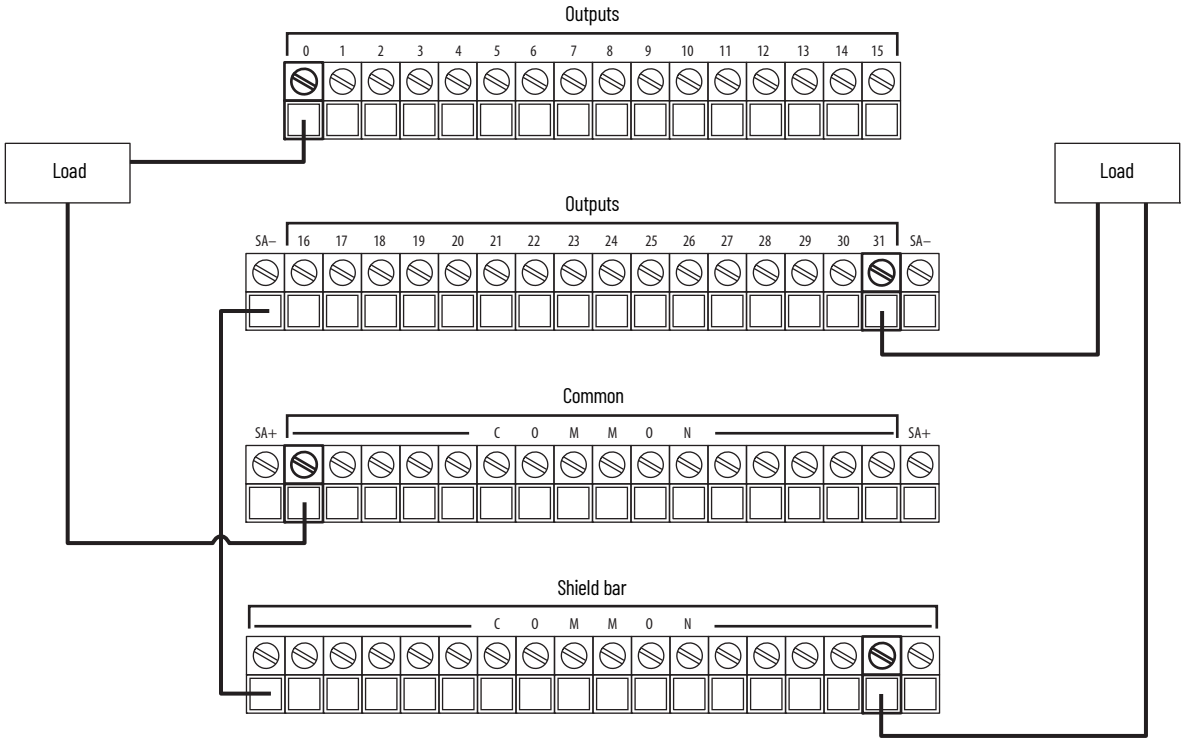

This figure shows a functional block diagram for the 5094-OB32 and 5094-OB32XT modules.

5094-OB32 and 5094-OB32XT Functional Block Diagram

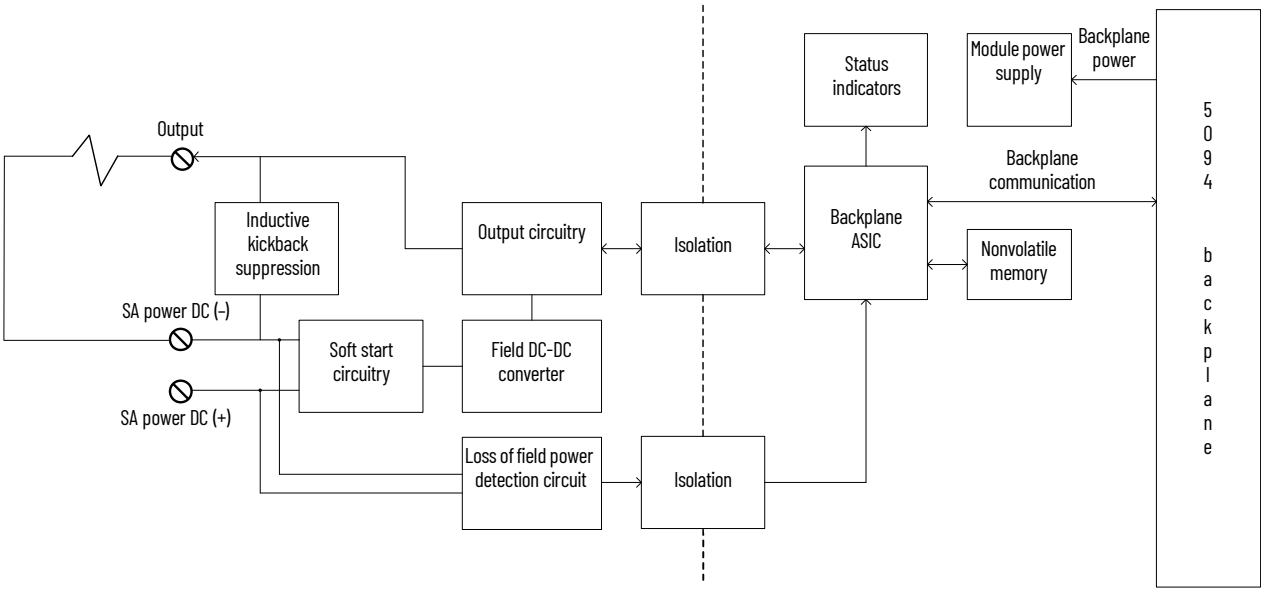

Technical Specifications - 5094-OB32, 5094-OB32XT

Attribute	5094-OB32, 5094-OB32XT
On-state voltage range	18...32V DC
On-state voltage drop, max	0.25V DC
On-state current per channel, min	1 mA
Off-state voltage, max	5V DC with 1 mA min load
Off-state leakage current per point, max(1) (2)	0.5 mA
Output current rating per channel, max	0.5 A
Output current rating per module, max	10 A
Surge current per point, max	1.4 A for 50 ms, repeatable every 2 s
Output delay time (backplane to screw), max Off to On On to Off	 100 µs @ 25 °C (77 °F) @ 0.5 A 100 µs @ 25 °C (77 °F) @ 0.5 A
Pulse width, min	≤ 200 µs (T_{on} + T_{off}) @ 0.5 A @ 25 °C (77 °F)
Output drift over temperature span	±400 ns/°C (±222.2 ns/°F) from -40...+70 °C (-40...+158 °F) @ 0.5 A
Field power loss detection	Yes
Open load detection diagnostics(3)	Yes
Output short circuit/overload/overtemp detection(4)	Yes
Output short circuit/overload protection	Yes
Reverse voltage protection	Yes
Overvoltage protection, max	36V (fuse protected, non-replaceable)
Pilot duty rating	0.5 A resistive and general pilot duty
Output states in program mode per point	Hold Last State On Off (default)
Output states in fault mode per point	Hold Last State On Off (default)
Duration of fault mode per point	1 s 2 s 5 s 10 s Forever (default)
Output final state after fault mode per point	On Off (default)
Scheduled outputs	Not supported
CIP Sync	Supported

(1) Recommended Loading Resistor - To limit the effects of leakage current through solid-state outputs, you can connect a loading resistor in parallel with your load. For 24V DC operation, use a 5.6 kΩ, 0.5 W resistor for transistor operation.
(2) Leakage current can be minimized by disabling Open load detection diagnostics.
(3) Diagnostic for the channel is active when the output is in the Off state.
(4) Diagnostic for the channel is active when the output is in the On state.

General Specifications - 5094-OB32, 5094-OB32XT

Attribute	5094-OB32, 5094-OB32XT
Outputs	32 channels (1 group of 32), sourcing
Voltage category	24V DC source
Output voltage range	18...32V DC
Backplane Power (BP) voltage	15V DC
Backplane Power (BP) current, max	95 mA
Sensor Actuator Power (SA) voltage range	18...32V DC
Sensor Actuator Power (SA) current, max	10 A per module
Power dissipation, max	3.5 W (20 channels @ 0.5 A)
Thermal dissipation, max	13.65 BTU/hr
Isolation voltage	250V (continuous), Basic Insulation Type, System to Field No isolation between SA power and Output ports No isolation between individual Output ports
Module keying	Mechanical keying or electronic keying via programming software.
Indicators	1 green/red module status indicator 1 green/red SA power status indicator 32 yellow/red I/O status indicators

General Specifications - 5094-OB32, 5094-OB32XT (Continued)

Attribute	5094-OB32, 5094-OB32XT
Terminal base (TB) assembly	**IMPORTANT:** Mounting bases (MBs) and removable terminal bases (RTBs) do not ship with the FLEX 5000 I/O modules. You must purchase a MB and a RTB individually for each I/O module. 5094-MB plus 5094-RTB32C (referred to in documentation as a non-orderable 5094-TB32C) 5094-MB plus 5094-RTB32CS (referred to in documentation as a non-orderable 5094-TB32CS) 5094-MBXT plus 5094-RTB32CXT (referred to in documentation as a non-orderable 5094-TB32CXT) 5094-MBXT plus 5094-RTB32CSXT (referred to in documentation as a non-orderable 5094-TB32CSXT)
TB keying	2 ⊘⊘ 5
Supported mounting orientation	Horizontal, horizontal and inverted, vertical, vertical and inverted.
Wire category(1)	2 - signal ports 2 - power ports
Wire size - Signal	0.34...2.5 mm^2 (22...14 AWG) solid or stranded copper wire that is rated at 105 °C (221 °F), or greater, 1.2 mm (3/64 in.) insulation, max Ferrule according to DIN 46 228/1.
Wire size - Power	2.5 mm^2 (14 AWG) Cu multi-strand
Dimensions (HxWxD), approx	54.0 x 94.0 x 87.0 mm (2.13 x 3.70 x 3.43 in.)
Weight, approx	137 g (0.30 lb)
Enclosure type	None (open - style)
North American temp code	T4
UKEX/ATEX temp code	T4
IECEx temp code	T4

(1) Use this Conductor Category information for planning conductor routing. See the Industrial Automation Wiring and Grounding Guidelines, publication 1770-4.1.
Use this Conductor Category information for planning conductor routing as described in the appropriate System Level Installation Manual.

5094-OW8I and 5094-OW8IXT Digital 8-point Isolated Relay Output Modules

This figure shows a wiring diagram for the 5094-OW8I and 5094-OW8IXT modules. You must connect a 24V DC power source to the left SA+/– terminals to provide field-side power.

5094-OW8I and 5094-OW8IXT Wiring Diagram

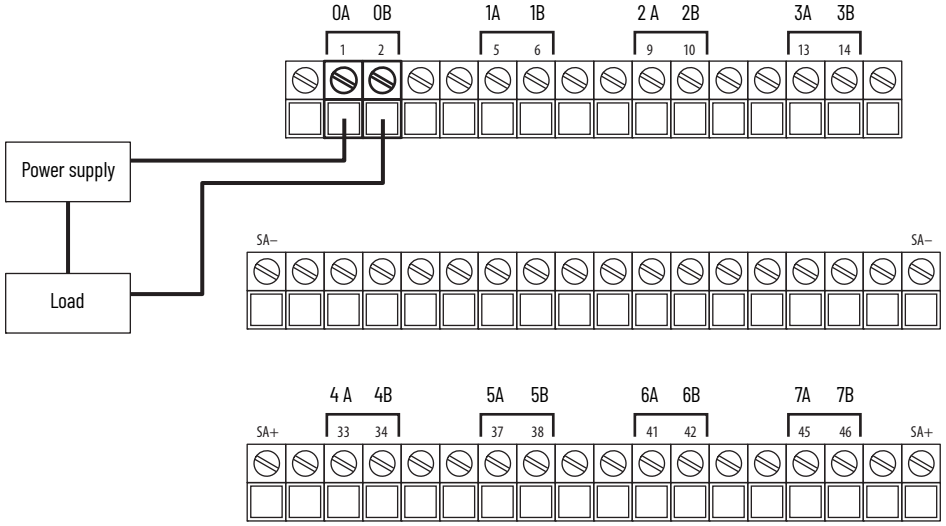

This figure shows a functional block diagram for the 5094-OW8I and 5094-OW8IXT modules.

5094-OW8I and 5094-OW8IXT Functional Block Diagram

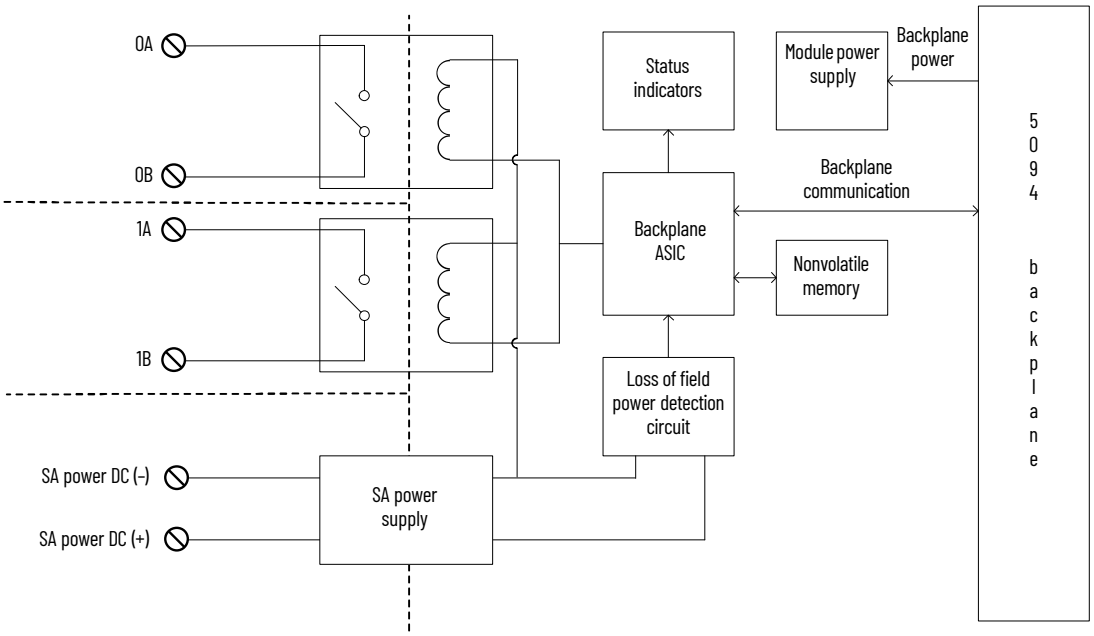

Technical Specifications - 5094-OW8I, 5094-OW8IXT

Attribute	5094-OW8I, 5094-OW8IXT
Relay rating[1]	2 A resistive/channel @ 5...30V DC 2 A resistive/channel @ 5...240V AC, 50/60 Hz 2 A general/channel @ 5...240V AC, 50/60 Hz 2 A ATEX/IECEx @ 5...240V AC, 50/60 Hz
Off-state leakage	0 mA (dry contact, no onboard snubbers)
Output current rating, max	2 A per channel
Output delay time, max Off to On On to Off	 10 ms 10 ms
Initial contact resistance, max	30 mΩ
Bounce time, mean	500 µs
Output states in program mode per point	Hold last state On Off (default)
Output states in fault mode per point	Hold Last State On Off (default)
Duration of fault mode per point	1 s 2 s 5 s 10 s Forever (default)
Output final state after fault mode per point	On Off (default)
Delay to fault	Supported
Fusing	Outputs are not fused.
Load current, min	1 mA
Expected contact life	300K cycles resistive, 100K cycles inductive
Pilot duty rating	5...240V AC, 50/60 Hz, C300 pilot duty per channel 5...125V DC, R150 pilot duty per channel

(1) **Surge Suppression** - Connecting surge suppressors across your external inductive load extends the life of the module. For additional details, see the Industrial Automation Wiring and Grounding Guidelines, publication 1770-4.1.

General Specifications - 5094-OW8I, 5094-OW8IXT

Attribute	5094-OW8I, 5094-OW8IXT
Outputs	8 - Form A (normally open)
Output voltage range	5...125V DC 5...240V AC
Backplane Power (BP) voltage	15V DC
Backplane Power (BP) current, max	70 mA
Sensor Actuator Power (SA) voltage range	18...32V DC
Sensor Actuator Power (SA) current, max	10 A (100 mA for module consumption. 10 A for full module load)
Power dissipation, max	3.5 W
Thermal dissipation, max	11.94 BTU/hr
Isolation voltage	250V (continuous), Basic Insulation Type, System to Field 250V (continuous), Reinforced Insulation Type, System to Channel 250V (continuous), Reinforced Insulation Type, Field to Channel 250V (continuous), Reinforced Insulation Type, Channel to Channel
Module keying	Mechanical keying or electronic keying via programming software.
Indicators	1 green/red module status indicator 1 green/red SA power status indicator 8 yellow/red I/O status indicators
Terminal base (TB) assembly	**IMPORTANT:** Mounting bases (MBs) and removable terminal bases (RTBs) do not ship with the FLEX 5000 I/O modules. You must purchase a MB and a RTB individually for each I/O module. 5094-MB plus 5094-RTB3W (referred to in documentation as a non-orderable 5094-TB3W) 5094-MB plus 5094-RTB3WS (referred to in documentation as a non-orderable 5094-TB3WS) 5094-MBXT plus 5094-RTB3WXT (referred to in documentation as a non-orderable 5094-TB3WXT) 5094-MBXT plus 5094-RTB3WSXT (referred to in documentation as a non-orderable 5094-TB3WSXT)
TB keying	**2 ⊘⊘ 2**
Supported mounting orientation	Horizontal, horizontal and inverted, vertical, vertical and inverted.
Wire category(1)	1 - signal ports 2 - power ports
Wire size - Signal	0.34...2.5 mm^2 (22...14 AWG) solid or stranded copper wire that is rated at 105 °C (221 °F), or greater, 1.2 mm (3/64 in.) insulation, max Ferrule according to DIN 46 228/1.
Wire size - Power	2.5 mm^2 (14 AWG) Cu multi-strand
Dimensions (HxWxD), approx	54.0 x 94.0 x 87.0 mm (2.13 x 3.70 x 3.43 in.)
Weight, approx	142 g (0.31 lb)
Enclosure type	None (open-style)
North American temp code	T4
UKEX/ATEX temp code	T4
IECEx temp code	T4

(1) Use this Conductor Category information for planning conductor routing. See the Industrial Automation Wiring and Grounding Guidelines, publication 1770-4.1.
Use this Conductor Category information for planning conductor routing as described in the appropriate System Level Installation Manual.

Environmental Specifications and Certifications

The following tables provide the environmental specifications and certifications for the FLEX 5000 I/O digital modules.

Environmental Specifications - FLEX 5000 I/O Digital Modules

Attribute	5094-IA16, 5094-IA16XT, 5094-IM8, 5094-IM8XT, 5094-IB16, 5094-IB16XT, 5094-IB32, 5094-IB32XT, 5094-OA16, 5094-OA16XT, 5094-OB8, 5094-OB8XT, 5094-OB16, 5094-OB16XT, 5094-OB32, 5094-OB32XT, 5094-OW8I, 5094-OW8IXT
Temperature, operating IEC 60068-2-1 (Test Ab, Operating Cold), IEC 60068-2-2 (TestBb, Unpackaged Nonoperating Dry Heat), IEC 60068-2-14 (Test Na, Operating Thermal Shock)	-40 °C ≤ Ta ≤ +70 °C (-40 °F ≤ Ta ≤ +158 °F)
Temperature, surrounding air, max	70 °C (158 °F)
Temperature, storage IEC 60068-2-1 (Test Ab, Unpackaged Nonoperating Cold), IEC 60068-2-2 (Test Bb, Unpackaged Nonoperating Dry Heat), IEC 60068-2-14 (Test Na, Unpackaged Nonoperating Thermal Shock)	-40...+85 °C (-40...+185 °F)
Relative humidity IEC 60068-2-30 (Test Db, Unpackaged Damp Heat)	5...95% noncondensing
Vibration IEC 60068-2-6 (Test Fc, Operating)	4 g @ 10...500 Hz - **5094-IA16, 5094-IA16XT, 5094-IM8, 5094-IM8XT, 5094-IB32, 5094-IB32XT, 5094-OA16, 5094-OA16XT, 5094-OB8, 5094-OB8XT, 5094-OB32, 5094-OB32XT only** 5 g @ 10...500 Hz - **5094-IB16, 5094-IB16XT, 5094-OB16, 5094-OB16XT, 5094-OW8I, 5094-OW8IXT only**

Environmental Specifications - FLEX 5000 I/O Digital Modules (Continued)

Attribute	5094-IA16, 5094-IA16XT, 5094-IM8, 5094-IM8XT, 5094-IB16, 5094-IB16XT, 5094-IB32, 5094-IB32XT, 5094-OA16, 5094-OA16XT, 5094-OB8, 5094-OB8XT, 5094-OB16, 5094-OB16XT, 5094-OB32, 5094-OB32XT, 5094-OW8I, 5094-OW8IXT
Shock, operating IEC 60068-2-27 (Test Ea, Unpackaged Shock)	25 g – **5094-IA16, 5094-IA16XT, 5094-IM8, 5094-IM8XT, 5094-IB32, 5094-IB32XT, 5094-OA16, 5094-OA16XT, 5094-OB8, 5094-OB8XT, 5094-OB32, 5094-OB32XT only** 30 g – **5094-IB16, 5094-IB16XT, 5094-OB16, 5094-OB16XT, 5094-OW8I, 5094-OW8IXT only**
Shock, nonoperating IEC 60068-2-27 (Test Ea, Unpackaged Shock)	30 g
Emissions	IEC 61000-6-4
ESD immunity IEC 61000-4-2	6 kV contact discharges 8 kV air discharges
Radiated Red RF immunity IEC 61000-4-3	10V/m with 1 kHz sine wave 80% AM from 80...6000 MHz
EFT/B immunity IEC 61000-4-4	±4 kV @ 5 kHz on power ports ±4 kV @ 5 kHz on signal ports
Surge transient immunity IEC 61000-4-5	±1 kV line-line (DM) and ±2 kV line-earth (CM) on power ports ±1 kV line-line (DM) and ±2 kV line-earth (CM) on signal ports
Conducted RF immunity IEC 61000-4-6	10V rms with 1 kHz sine wave 80% AM from 150 kHz...80 MHz
Corrosive resistance classification	ISA S71.04 G2 – **Non-XT catalogs** ISA S71.04 G3 – **XT catalogs**

Certifications - FLEX 5000 I/O Digital Modules

Certification[1]	5094-IA16, 5094-IA16XT, 5094-IB16, 5094-IB16XT, 5094-IB32, 5094-IB32XT, 5094-IM8, 5094-IM8XT, 5094-OA16, 5094-O16XT, 5094-OB8, 5094-OB8XT, 5094-OB16, 5094-OB16XT, 5094-OB32, 5094-OB32XT, 5094-OW8I, 5094-OW8IXT
c-UL-us	UL Listed Industrial Control Equipment, certified for US and Canada. See UL File E322657. UL Listed for Class I, Division 2 Group A,B,C,D Hazardous Locations, certified for U.S. and Canada. See UL File E334470.
CE	European Union 2014/30/EU EMC Directive, compliant with: EN 61326-1; Meas./Control/Lab., Industrial Requirements EN 61000-6-2; Industrial Immunity EN 61000-6-4; Industrial Emissions EN 61131-2; Programmable Controllers (Clause 8, Zone A & B) European Union 2014/35/EU LVD, compliant with: EN 61010-2-201; Control Equipment Safety Requirements European Union 2011/65/EU RoHS, compliant with: EN 63000; Technical documentation
RCM	Australian Radiocommunications Act, compliant with: EN 61000-6-4; Industrial Emissions
Ex	UK Statutory Instrument 2016 No. 1107 and European Union 2014/34/EU ATEX Directive, compliant with: EN IEC 60079-0; General Requirements EN IEC 60079-7; Explosive Atmospheres, Protection "e" EN IEC 60079-15; Potentially Explosive Atmospheres, Protection "n" II 3 G Ex ec nC IIC T4 Gc -**5094-OW8I and 5094-OW8IXT only** II 3 G Ex ec IIC T4 Gc DEMKO 17 ATEX 1907X UL22UKEX2394X
IECEx	IECEx System, compliant with: IEC 60079-0; General Requirements IEC 60079-7; Explosive Atmospheres, Protection "e" IEC 60079-15; Potentially Explosive Atmospheres, Protection "n" Ex ec nC IIC T4 Gc - **5094-OW8I and 5094-OW8IXT only** Ex ec IIC T4 Gc IECEx UL 17.0066X
KC	Korean Registration of Broadcasting and Communications Equipment, compliant with: Article 58-2 of Radio Waves Act, Clause 3
Morocco	Arrêté ministériel n° 6404-15 du 1 er muharram 1437 Arrêté ministériel n° 6404-15 du 29 ramadan 1436
EAC	Russian Customs Union TR CU 020/2011 EMC Technical Regulation Russian Customs Union TR CU 004/2011 LV Technical Regulation
CCC	CNCA-C23-01 强制性产品认证实施规则 防爆电气 CNCA-C23-01 CCC Implementation Rule Explosion-Proof Electrical Products
UKCA	2016 No. 1091 – Electromagnetic Compatibility Regulations 2016 No. 1101 – Electrical Equipment (Safety) Regulations 2016 No. 1107 – Equipment and Protective Systems Intended for Use in Potentially Explosive Atmospheres Regulations 2012 No. 3032 – Restriction of the Use of Certain Hazardous Substances in Electrical and Electronic Equipment Regulations

(1) When marked. See the Product Certifications website at rok.auto/certifications for declarations of conformity, certificates, and other certification details.

Analog I/O Modules

I/O Type	Catalog Number	Description	Page
Analog input	5094-IF8, 5094-IF8XT	8-channel current/voltage input modules	27
	5094-IY8, 5094-IY8XT	8-channel current/voltage/RTD/thermocouple input modules	30
Analog output	5094-OF8, 5094-OF8XT	8-channel current/voltage output modules	37
Analog HART input	5094-IF8IH, 5094-IF8IHXT	8-channel isolated current/voltage/HART input modules	40
Analog HART output	5094-OF8IH, 5094-OF8IHXT	8-channel isolated current/voltage/HART output modules	46

Environmental specifications and certifications for FLEX 5000 I/O analog modules are provided on page 50.

5094-IF8 and 5094-IF8XT Analog 8-channel Current/Voltage Input Modules

This figure shows a wiring diagram for the 5094-IF8 and 5094-IF8XT modules when used in current mode. You must connect a 24V DC power source to the left SA+/– terminals to provide field-side power.

5094-IF8 and 5094-IF8XT Wiring Diagram — 2-wire and 3-wire Current Mode

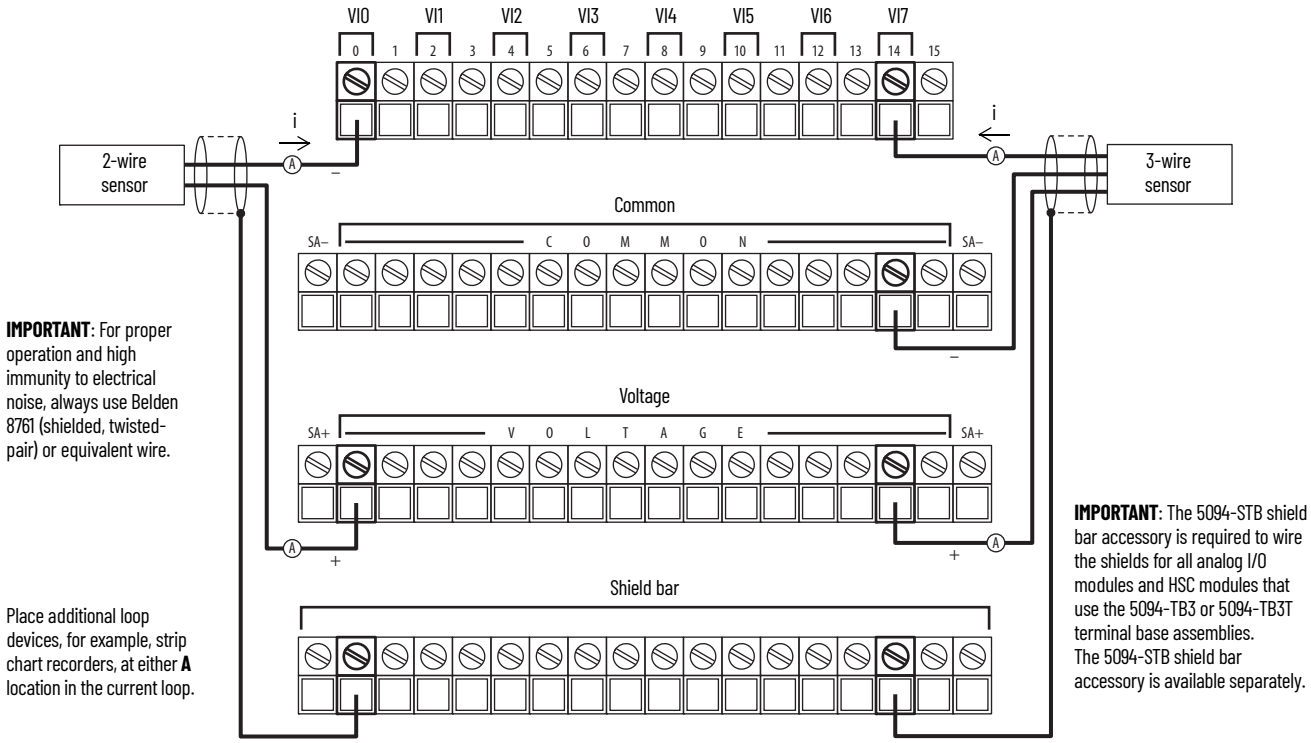

This figure shows a wiring diagram for the 5094-IF8 and 5094-IF8XT modules when used in voltage mode. You must connect a 24V DC power source to the left SA+/– terminals to provide field-side power.

5094-IF8 and 5094-IF8XT Wiring Diagram — 2-wire and 3-wire Voltage Mode

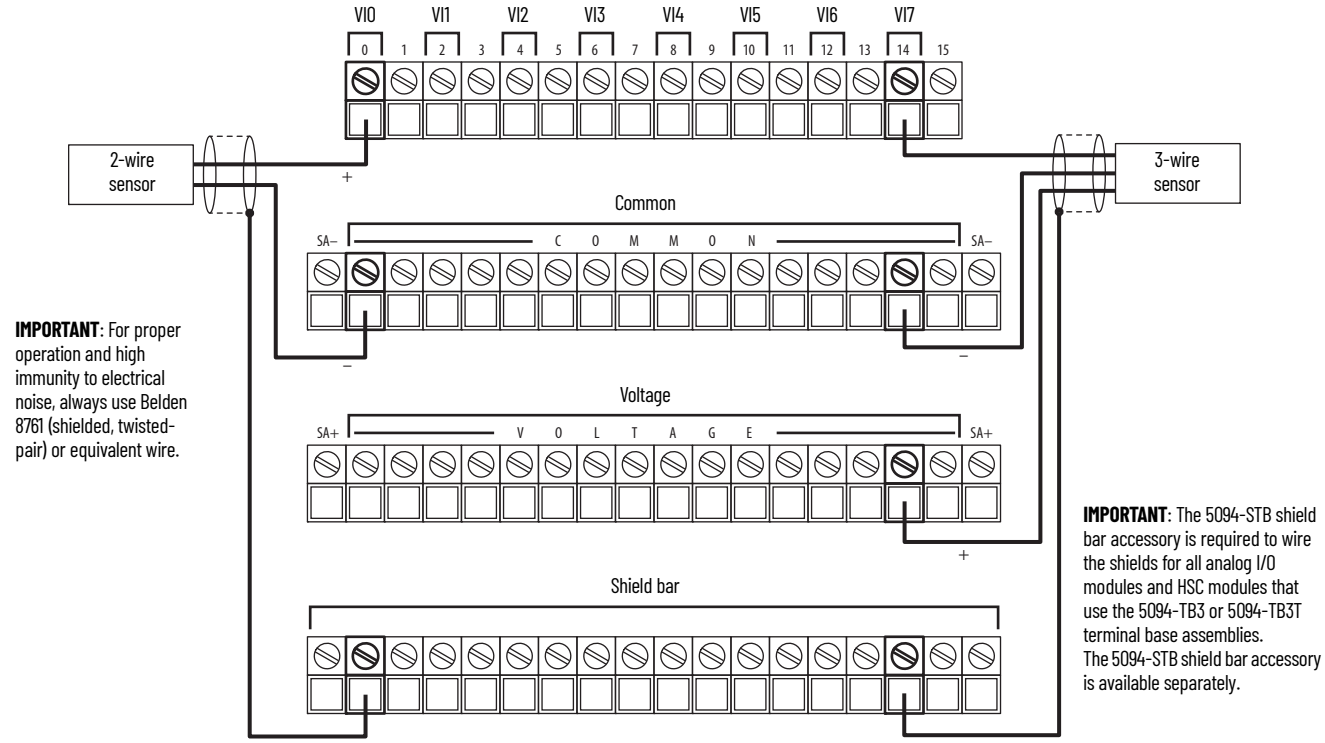

This figure shows a functional block diagram for the 5094-IF8 and 5094-IF8XT modules.

5094-IF8 and 5094-IF8XT Functional Block Diagram

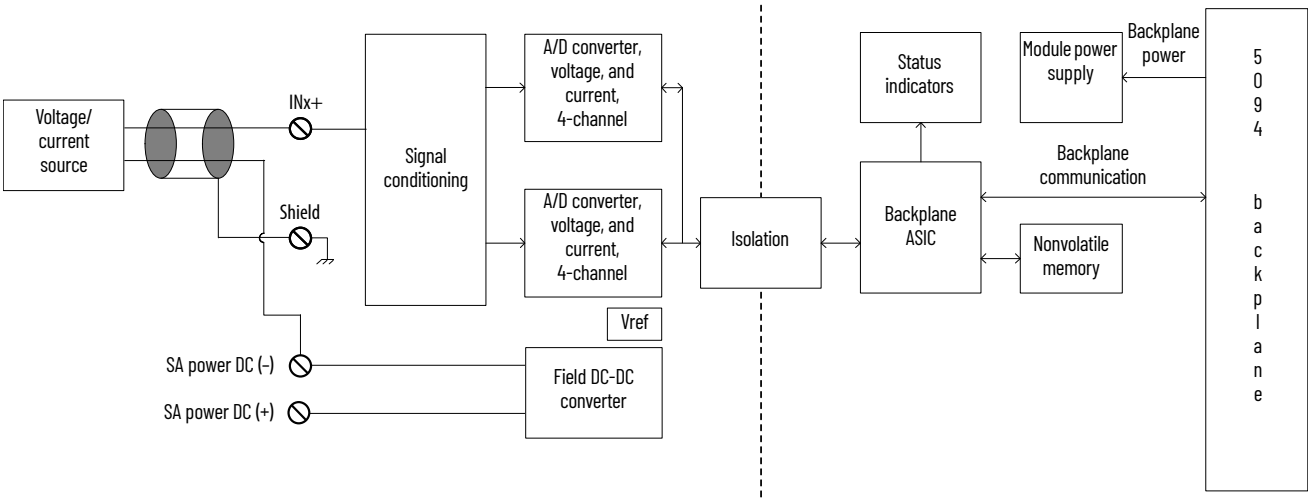

Technical Specifications - 5094-IF8, 5094-IF8XT

Attribute	5094-IF8, 5094-IF8XT
Inputs	8 single-ended
Input range, voltage	±10V 0...10V 0...5V
Input range, current	0...20 mA 4...20 mA
Input impedance	Voltage: >1 MΩ Current: 250 Ω typical
Module conversion method	Sigma-Delta, Two 24-bit multiplexed ADC
Resolution, voltage(1) (16 bits at 10 Hz notch filter)	±10.5V: <320 µV/count (15 bits plus sign bipolar) 0...10.5V: <160 µV/count (16 bits unipolar) 0...5.25V: <80 µV/count (16 bits unipolar)
Resolution, current(1) (16 bits at 10 Hz notch filter)	0...21 mA: <0.32 µA/count (16 bits) 3.6...21 mA: <0.32 µA/count (16 bits)
Calibrated accuracy at 25 °C (77 °F)	Voltage: 0.05% full scale Current: 0.05% full scale
Accuracy drift with temperature	Voltage: 28 ppm/ºC Current: 47 ppm/ºC
Scan Time Per channel Per module	 360 µs 1.4 ms
Notch filter at min RPI (0.2 ms, 1 channel enabled)	62.5 kHz
Notch filter frequency at RPI of 2.5 ms, min	10 kHz
Input notch filter (Hz) selections	5, 10 (50/60 Default), 15, 20, 50, 60, 100, 200, 500, 1000, 2500, 5000, 10000, 15625, 25000, 31250, 62500.
Input digital filter	1st order lag, 0 ms (Default) - 32,767 ms (32.767 s)
HART handheld compliance	Yes
Overvoltage protection, max	Voltage and Current modes: ±32V DC
Overcurrent protection	Current mode: ±30 mA
Data value during overload condition	Full scale, overrange flag, Data uncertain / data bad
Open circuit detection time	Voltage: + full scale, < 2 s Current: 4...20 mA range, <1 s
Onboard data alarming	Yes
Scaling to engineering units	Yes
Real-time channel sampling	Yes
Data format	IEEE 754 32-bit floating point
Timestamp of inputs	Yes
CIP Sync	Yes

(1) Notch filter dependent.

General Specifications - 5094-IF8, 5094-IF8XT

Attribute	5094-IF8, 5094-IF8XT
Backplane Power (BP) voltage	15V DC
Backplane Power (BP) current, max	70 mA
Sensor Actuator Power (SA) voltage range	18...32V DC
Sensor Actuator Power (SA) current, max	120 mA
Power dissipation, max	Current mode: 3.5 W
Thermal dissipation, max	Current mode: 11.94 BTU/hr
Isolation voltage	250V (continuous), Basic Insulation Type, System to Field No isolation between SA power and input ports No isolation between individual input ports
Calibration methods	Factory calibrated User-performed (optional)

General Specifications - 5094-IF8, 5094-IF8XT (Continued)

Attribute	5094-IF8, 5094-IF8XT
Module keying	Mechanical keying or electronic keying via programming software.
Indicators	1 green/red module status indicator 1 green/red SA power status indicator 8 yellow/red I/O status indicators
Normal mode noise rejection ratio	65 dB @ 50/60 Hz, notch filter dependent
Terminal base (TB) assembly	**IMPORTANT:** Mounting bases (MBs) and removable terminal bases (RTBs) do not ship with the FLEX 5000 I/O modules. You must purchase a MB and a RTB individually for each I/O module. 5094-MB plus 5094-RTB3 (referred to in documentation as a non-orderable 5094-TB3) 5094-MB plus 5094-RTB3S (referred to in documentation as a non-orderable 5094-TB3S) 5094-MBXT plus 5094-RTB3XT (referred to in documentation as a non-orderable 5094-TB3XT) 5094-MBXT plus 5094-RTB3SXT (referred to in documentation as a non-orderable 5094-TB3SXT)
TB keying	2 Ⓐ Ⓣ 1
Supported mounting orientation	Horizontal, horizontal and inverted, vertical, vertical and inverted.
Wire category(1)	2 - shielded ports 2 - power ports
Wire size - Signal	0.34...2.5 mm^2 (22...14 AWG) solid or stranded copper wire that is rated at 105 °C (221 °F), or greater, 1.2 mm (3/64 in.) insulation, max Ferrule according to DIN 46 228/1.
Wire size - Power	2.5 mm^2 (14 AWG) Cu multi-strand
Dimensions (HxWxD), approx	87.0 x 94.0 x 54.0 mm (3.43 x 3.70 x 2.13 in.)
Weight, approx	104 g (0.23 lb)
Enclosure type	None (open-style)
North American temperature code	T4
UKEX/ATEX temp code	T4
IECEx temp code	T4

(1) Use this Conductor Category information for planning conductor routing. See the Industrial Automation Wiring and Grounding Guidelines, publication 1770-4.1.
Use this Conductor Category information for planning conductor routing as described in the appropriate System Level Installation Manual.

5094-IY8 and 5094-IY8XT Analog 8-channel Current/Voltage/RTD/Thermocouple Input Modules

This figure shows a wiring diagram for the 5094-IY8 and 5094-IY8XT modules when used in current mode. You must connect a 24V DC power source to the left SA+/– terminals to provide field-side power.

5094-IY8 and 5094-IY8XT Wiring Diagram — Current Mode

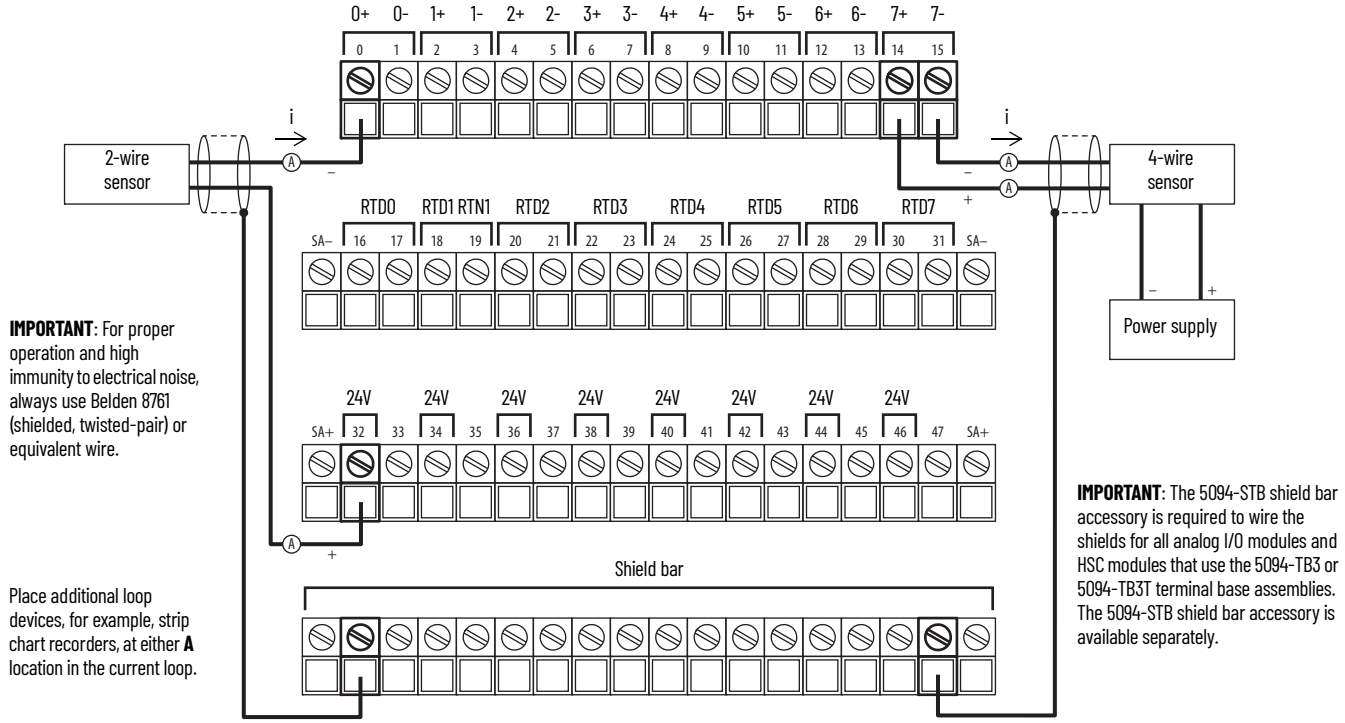

This figure shows a wiring diagram for the 5094-IY8 and 5094-IY8XT modules when used in voltage mode. You must connect a 24V DC power source to the left SA+/– terminals to provide field-side power.

5094-IY8 and 5094-IY8XT Wiring Diagram — 2-wire Voltage Mode

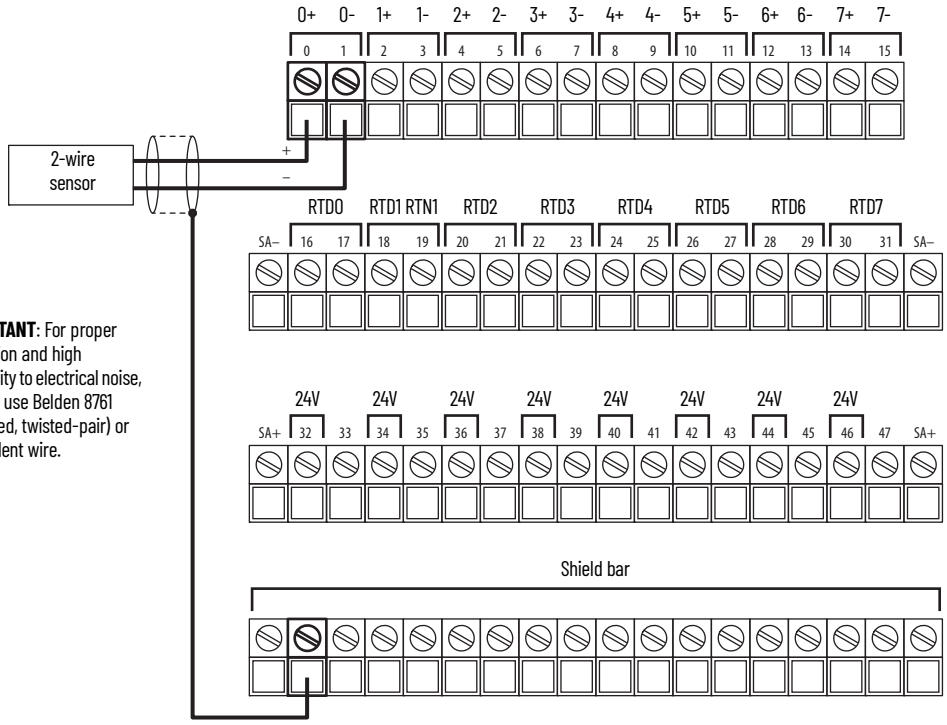

IMPORTANT: For proper operation and high immunity to electrical noise, always use Belden 8761 (shielded, twisted-pair) or equivalent wire.

IMPORTANT: The 5094-STB shield bar accessory is required to wire the shields for all analog I/O modules and HSC modules that use the 5094-TB3 or 5094-TB3T terminal base assemblies.
The 5094-STB shield bar accessory is available separately.

5094-IY8 and 5094-IY8XT Wiring Diagram — 4-wire Voltage Mode

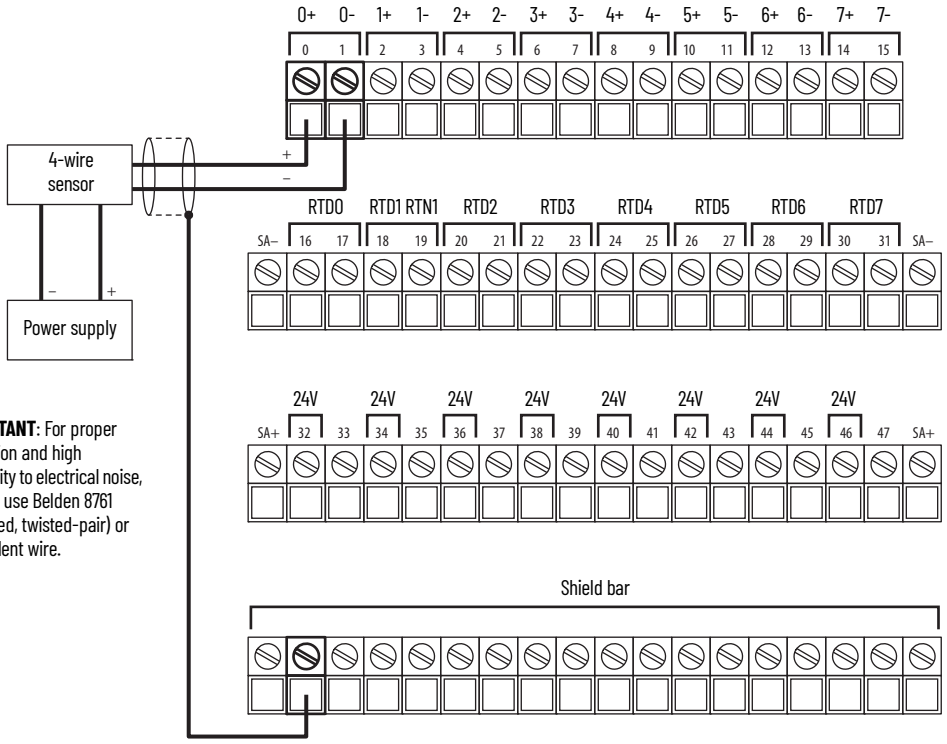

IMPORTANT: For proper operation and high immunity to electrical noise, always use Belden 8761 (shielded, twisted-pair) or equivalent wire.

IMPORTANT: The 5094-STB shield bar accessory is required to wire the shields for all analog I/O modules and HSC modules that use the 5094-TB3 or 5094-TB3T terminal base assemblies.
The 5094-STB shield bar accessory is available separately.

This figure shows a wiring diagram for the 5094-IY8 and 5094-IY8XT modules when used in RTD mode. You must connect a 24V DC power source to the left SA+/– terminals to provide field-side power.

5094-IY8 and 5094-IY8XT Wiring Diagram — 2-wire RTD Mode

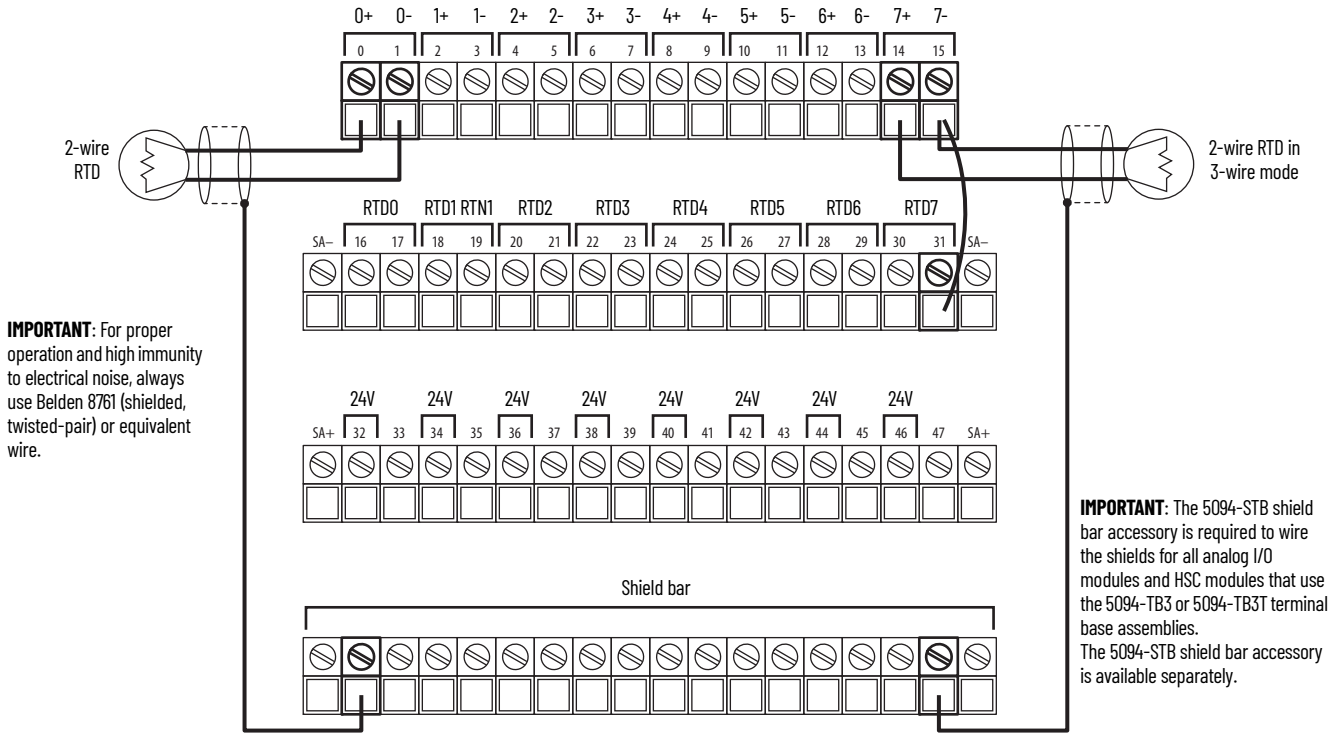

IMPORTANT: For proper operation and high immunity to electrical noise, always use Belden 8761 (shielded, twisted-pair) or equivalent wire.

IMPORTANT: The 5094-STB shield bar accessory is required to wire the shields for all analog I/O modules and HSC modules that use the 5094-TB3 or 5094-TB3T terminal base assemblies.
The 5094-STB shield bar accessory is available separately.

5094-IY8 and 5094-IY8XT Wiring Diagram — 3-wire and 4-wire RTD Mode

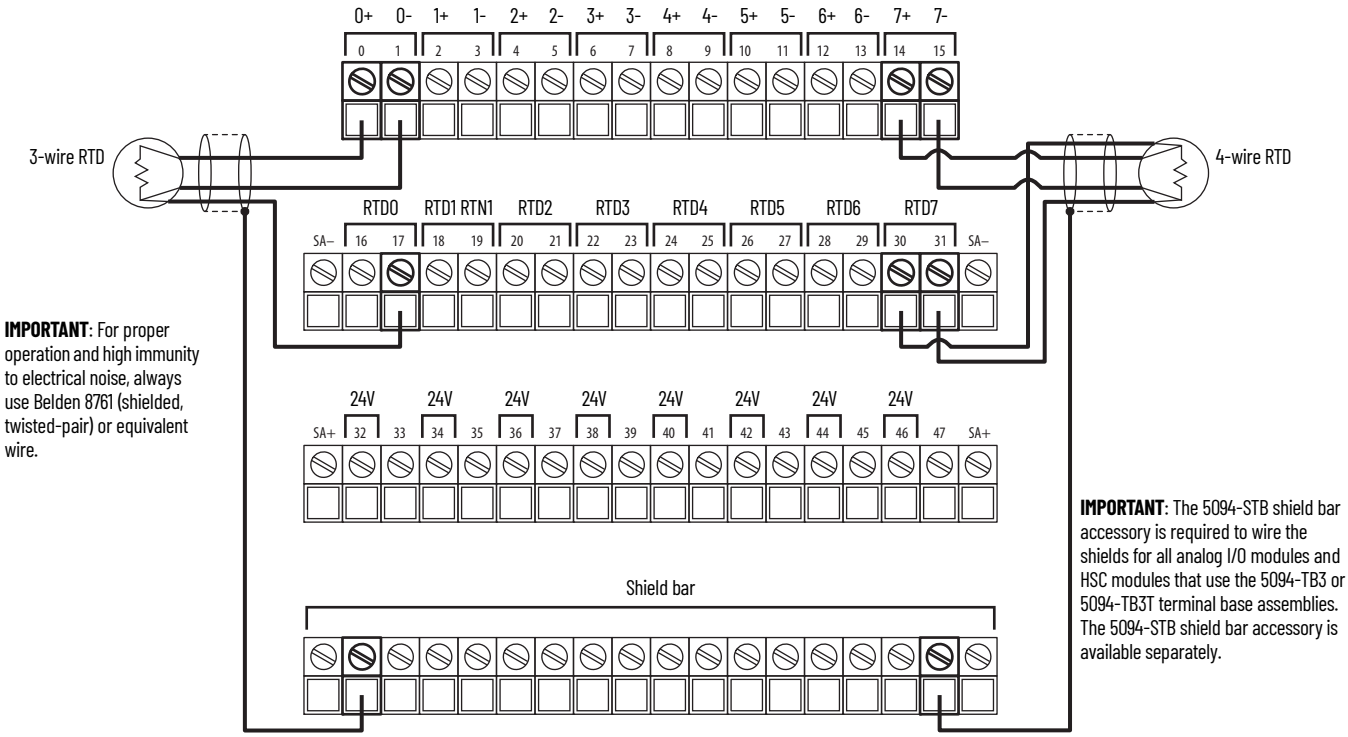

IMPORTANT: For proper operation and high immunity to electrical noise, always use Belden 8761 (shielded, twisted-pair) or equivalent wire.

IMPORTANT: The 5094-STB shield bar accessory is required to wire the shields for all analog I/O modules and HSC modules that use the 5094-TB3 or 5094-TB3T terminal base assemblies.
The 5094-STB shield bar accessory is available separately.

This figure shows a wiring diagram for the 5094-IY8 and 5094-IY8XT modules when used in thermocouple mode. You must connect a 24V DC power source to the left SA+/– terminals to provide field-side power.

5094-IY8 and 5094-IY8XT Wiring Diagram — Thermocouple Mode

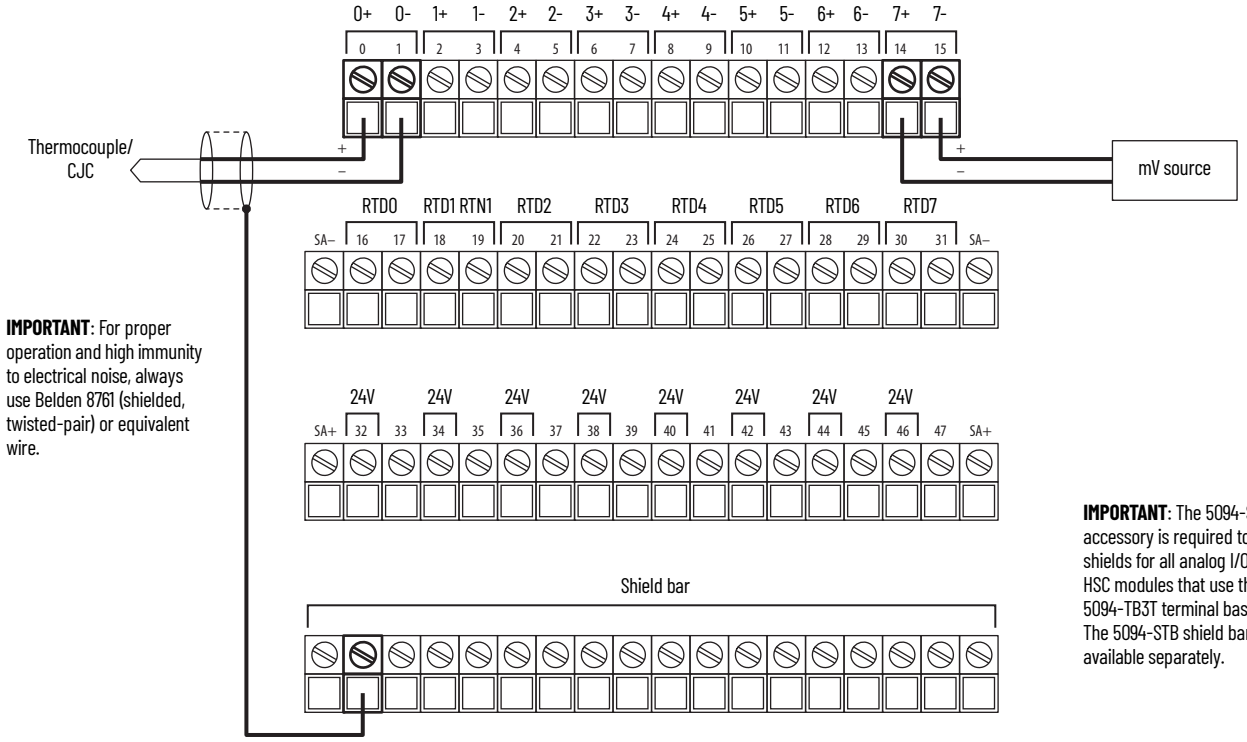

IMPORTANT: For proper operation and high immunity to electrical noise, always use Belden 8761 (shielded, twisted-pair) or equivalent wire.

IMPORTANT: The 5094-STB shield bar accessory is required to wire the shields for all analog I/O modules and HSC modules that use the 5094-TB3 or 5094-TB3T terminal base assemblies. The 5094-STB shield bar accessory is available separately.

This figure shows a functional block diagram for the 5094-IY8 and 5094-IY8XT modules.

5094-IY8 and 5094-IY8XT Functional Block Diagram

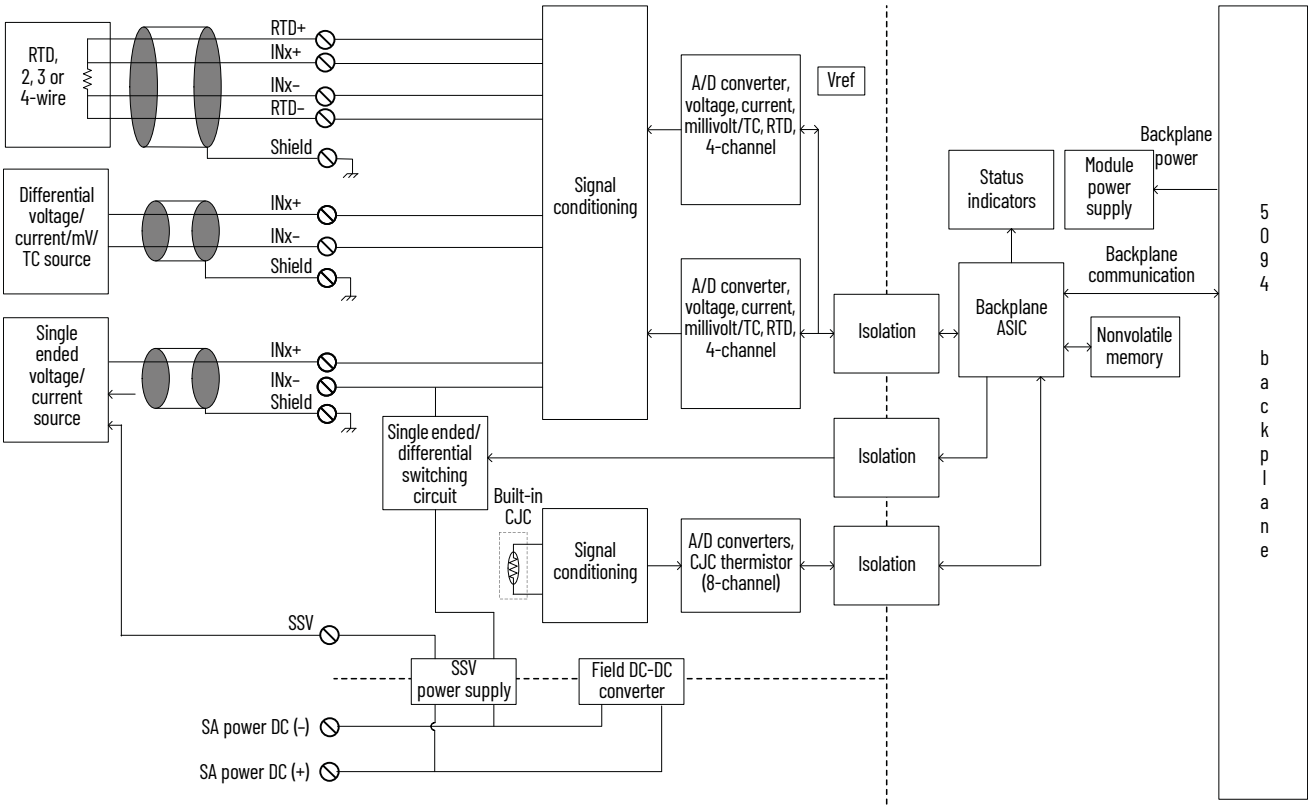

Technical Specifications - 5094-IY8, 5094-IY8XT

Attribute	5094-IY8, 5094-IY8XT
Inputs	8 differential/single-ended
Differential / single-ended mode	Yes
Input range, voltage	±10V 0...10V 0...5V
Input range, current	0...20 mA 4...20 mA
Input range, resistive	1...500 Ω 2...1000 Ω 4...2000 Ω 8...4000 Ω
Input type, RTD	100, 200, 500, 1000 Ω platinum, alpha=385 100, 200, 500, 1000 Ω platinum, alpha=3916 120 Ω nickel, alpha=672 100, 120, 200, 500 Ω nickel, alpha=618 10 Ω copper 427
Input range, thermocouple / millivolt	±100 mV
Input type, thermocouple	B, C, D, E, J, K, L (TXK/XK), N, R, S, T
Input impedance	Voltage: >1 MΩ Current: 90 Ω typical, 70...110 Ω range RTD: >1 MΩ Thermocouple/millivolt: >1 MΩ
Common mode voltage (channel to channel)	±10V (current mode, 3-wire, and 4-wire RTD mode) ±2V (voltage mode)
Module conversion method	Sigma-Delta, Two 24-bit multiplexed ADC
Resolution, voltage[1] (16 bits at 10 Hz notch filter)	±10.5V: <320 µV/count (15 bits plus sign bipolar) 0...10.5V: <160 µV/count (16 bits unipolar) 0...5V: <80 µV/count (16 bits unipolar)
Resolution, current[1] (16 bits at 10 Hz notch filter)	0...21 mA: <0.32 µA/count (16 bits) 3.6...21 mA: <0.32 µA/count (16 bits)
Resolution, resistive[1] (16 bits at 10 Hz notch filter) 3-wire and 4-wire mode	<7.7 mΩ/cnt in 1...500 Ω mode (16 bits) <15.4 mΩ/cnt in 2...1000 Ω mode (16 bits) <30.8 mΩ/cnt in 4...2000 Ω mode (16 bits) <61.5 mΩ/cnt in 8...4000 Ω mode (16 bits)
Resolution, thermocouple / millivolt[1] (16 bits at 10 Hz notch filter)	<3.1 µV/cnt in ±100 mV mode
RTD excitation current	600 µA, 3-wire mode and 4-wire mode 100 µA, 2-wire mode
Wire impedance (3-wire RTD mode only)	25 Ω max for specified accuracy
RTD sensor types/temperature range: (Each sensor type in a cell supports all temperature ranges in the corresponding column to the right.)	
100, 200, 500, 1000 Ohm PT 385	-200...+870 °C -328...+1598 °F 73...1143 °K 132...2058 °R
100, 200, 500, 1000 Ohm PT 3916	-200...+630 °C -328...+1166 °F 73...903 °K 132...1626 °R
10 Ohm CU 247	-200...+260 °C -328...+500 °F 73...533 °K 132...960 °R

Technical Specifications - 5094-IY8, 5094-IY8XT (Continued)

Attribute	5094-IY8, 5094-IY8XT
120 Ohm NI 672	-80...+320 °C -112...+608 °F 193...593 °K 348...1068 °R
100, 120, 200, 500 Ohm NI 618	-60...+250 °C -76...+482 °F 213...523 °K 384...942 °R
Thermocouple type/temperature range: Thermocouple Type B	21...1820 °C 68...3308 °F 293...2093 °K 528...3768 °R
Thermocouple Type C	0...2320 °C 32...4208 °F 273...2593 °K 492...4668 °R
Thermocouple Type D	0...2320 °C 32...4208 °F 273...2593 °K 492...4668 °R
Thermocouple Type E	-270...+1000 °C -454...+1832 °F 3...1273 °K 6...2292 °R
Thermocouple Type J	-210...+1200 °C -346...+2192 °F 63...1473 °K 114...2652 °R
Thermocouple Type K	-270...+1372 °C -454...+2502 °F 3...1645 °K 6...2961 °R
Thermocouple Type N	-270...+1300 °C -454...+2372 °F 3...1573 °K 6...2832 °R
Thermocouple Type R	-50...+1768 °C -58...+3215 °F 223...2041 °K 402...3674 °R
Thermocouple Type S	-50...+1768 °C -58...+3215 °F 223...2041 °K 402...3674 °R
Thermocouple Type T	-270...+400 °C -454...+752 °F 3...673 °K 6...1212 °R
Thermocouple Type TXK/XK (L)	-200...+800 °C -328...+1472 °F 73...1073 °K 132...1932 °R
Thermocouple linearization	ITS-90
CJC inputs (for thermocouple mode use only)	CJC sensors 8 thermistors embedded in 5094-RTB3T Measurement Specialties, Inc. 10K3A1A
Local CJC sensor accuracy	±0.5 °C
Remote CJC sensor accuracy	Based on channel accuracy
Sensor source voltage output (SSV)	24V, 200 mA max
Calibrated accuracy at 25 °C (77 °F)	Voltage: 0.05% full scale Current: 0.05% full scale RTD: 0.05% full scale Thermocouple/millivolt: 0.05% full scale
Accuracy drift with temperature	Voltage: 28 ppm/ºC Current: 24 ppm/ºC RTD: 60 ppm/ºC Thermocouple/millivolt: 15 ppm/ºC

Technical Specifications - 5094-IY8, 5094-IY8XT (Continued)

Attribute	5094-IY8, 5094-IY8XT
Scan time Per channel Per group (channel group 0...3 or channel group 4...7)	 360 µs 1.4 ms
Notch filter at min RPI (0.2 ms, 1 channel enabled)	62.5 kHz
Notch filter frequency at RPI of 2.5 ms, min	10 kHz
Input notch filter (Hz) selections	5, 10 (50/60 default), 15, 20, 50, 60, 100, 200, 500, 1000, 2500, 5000, 10000, 15625, 25000, 31250, 62500.
Input digital filter	1st Order Lag, 0 ms (Default) - 32,767 ms (32.767 s)
HART handheld compliance	No Add an external 250 Ω resistor into the current loop for HART transmitter compliance.
Overvoltage protection, max	Voltage, current, RTD, and thermocouple/mV modes: ±32V DC
Overcurrent protection	Current mode: ±30 mA
Data value during overload condition	Full scale, overrange flag, Data uncertain / data bad
Open circuit detection time, nom	Voltage: + full scale, <2 s Current: 4...20 mA range, <1 s RTD: <10 s Thermocouple/millivolt: + full scale, <2 s
Onboard data alarming	Yes
Scaling to engineering units	Yes
Real-time channel sampling	Yes
Data format	IEEE 754 32-bit floating point
Timestamp of inputs	Yes
CIP Sync	Yes

(1) Notch filter dependent.

General Specifications - 5094-IY8, 5094-IY8XT

Attribute	5094-IY8, 5094-IY8XT
Backplane Power (BP) voltage	15V DC
Backplane Power (BP) current, max	75 mA
Sensor Actuator Power (SA) voltage range	18...32V DC
Sensor Actuator Power (SA) current, max	480 mA (include SSV 200 mA)
Power dissipation, max	3.9 W
Thermal dissipation, max	13.31 BTU/hr
Isolation voltage	250V (continuous), Basic Insulation Type, System to Field No isolation between SA power and input ports No isolation between individual input ports
Calibration methods	Factory calibrated User-performed (optional)
Module keying	Mechanical keying or electronic keying via programming software.
Indicators	1 green/red module status indicator 1 green/red SA power status indicator 8 yellow/red I/O status indicators
Common mode noise rejection ratio (Differential Current mode)	130 dB @ 50/60 Hz
Normal mode noise rejection ratio	65 dB @ 50/60 Hz, notch filter dependent.
Terminal base (TB) assembly	**IMPORTANT:** Mounting bases (MBs) and removable terminal bases (RTBs) do not ship with the FLEX 5000 I/O modules. You must purchase a MB and a RTB individually for each I/O module. 5094-MB plus 5094-RTB3T (referred to in documentation as a non-orderable 5094-TB3T) 5094-MB plus 5094-RTB3TS (referred to in documentation as a non-orderable 5094-TB3TS) 5094-MBXT plus 5094-RTB3TXT (referred to in documentation as a non-orderable 5094-TB3TXT) 5094-MBXT plus 5094-RTB3TSXT (referred to in documentation as a non-orderable 5094-TB3TSXT)
TB keying	**3 ⊗⊗ 3**
Supported mounting orientation	Horizontal, horizontal and inverted, vertical, vertical and inverted
Wire category(1)	2 - shielded ports 2 - power ports
Wire size - Signal	0.34...2.5 mm^2 (22...14 AWG) solid or stranded copper wire that is rated at 105 °C (221 °F), or greater, 1.2 mm (3/64 in.) insulation, max Ferrule according to DIN 46 228/1.
Wire size - Power	2.5 mm^2 (14 AWG) Cu multi-strand
Dimensions (HxWxD), approx	87.0 x 94.0 x 54.0 mm (3.43 x 3.70 x 2.13 in.)

General Specifications - 5094-IY8, 5094-IY8XT (Continued)

Attribute	5094-IY8, 5094-IY8XT
Weight, approx	119 g (0.26 lb)
Enclosure type	None (open-style)
North American temperature code	T4
UKEX/ATEX temp code	T4
IECEx temp code	T4

(1) Use this Conductor Category information for planning conductor routing. See the Industrial Automation Wiring and Grounding Guidelines, publication 1770-4.1.
Use this Conductor Category information for planning conductor routing as described in the appropriate System Level Installation Manual.

5094-OF8 and 5094-OF8XT Analog Current/Voltage Output Modules

This figure shows a wiring diagram for the 5094-OF8 and 5094-OF8XT modules when used in current mode. You must connect a 24V DC power source to the left SA+/– terminals to provide field-side power.

5094-OF8 and 5094-OF8XT Wiring Diagram — Current Mode

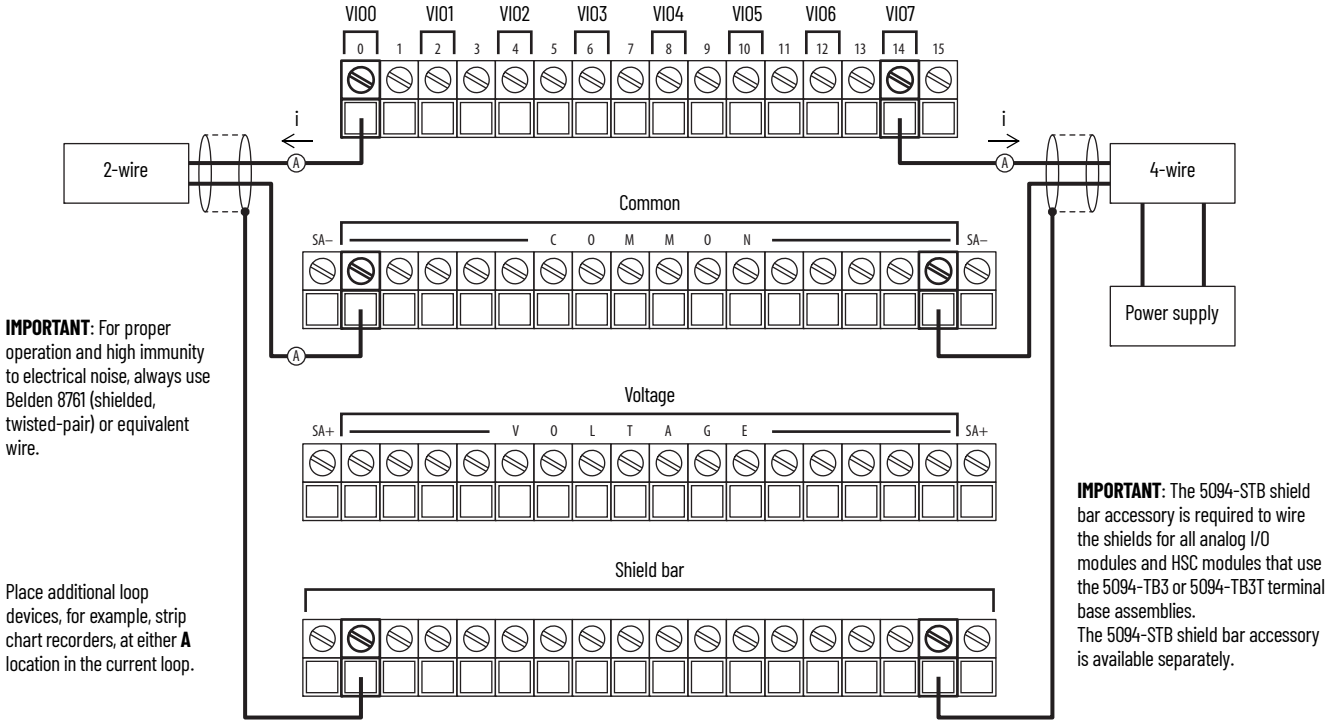

This figure shows a wiring diagram for the 5094-OF8 and 5094-OF8XT modules when used in voltage mode. You must connect a 24V DC power source to the left SA+/– terminals to provide field-side power.

5094-OF8 and 5094-OF8XT Wiring Diagram — Voltage Mode

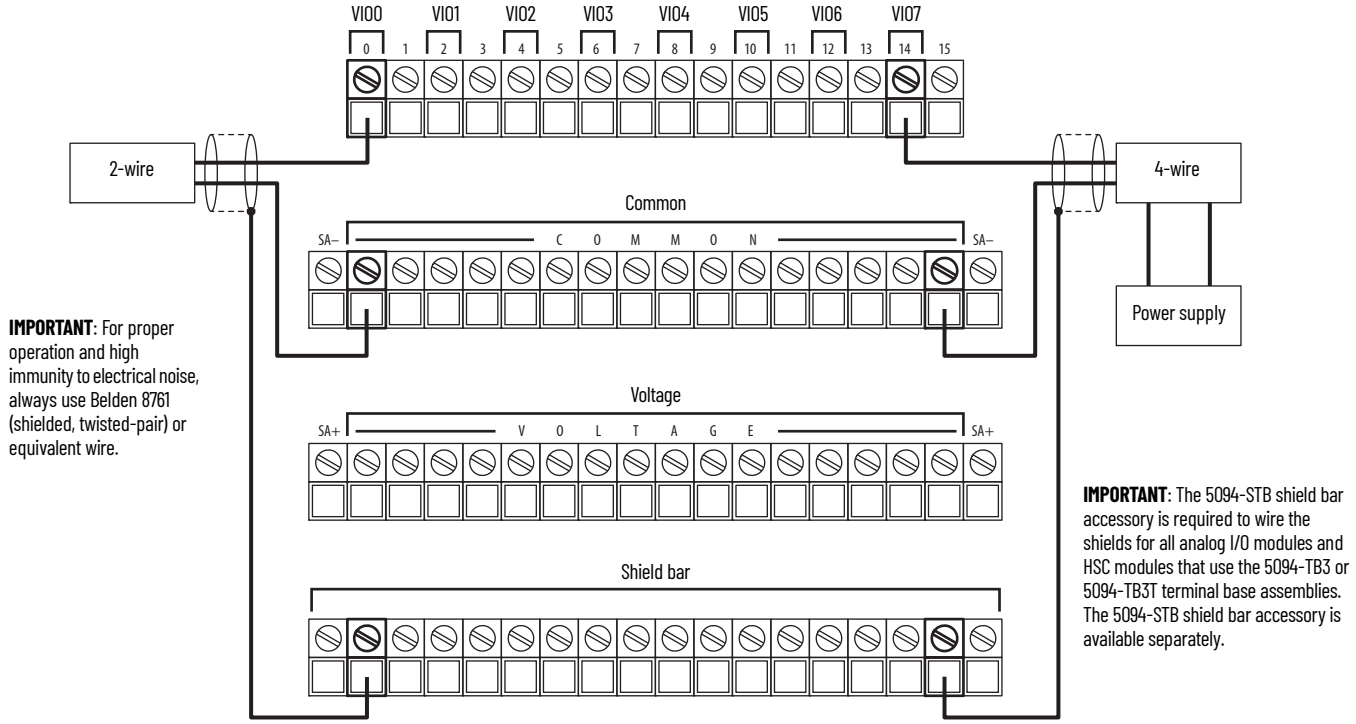

This figure shows a functional block diagram for the 5094-OF8 and 5094-OF8XT modules.

5094-OF8 and 5094-OF8XT Functional Block Diagram

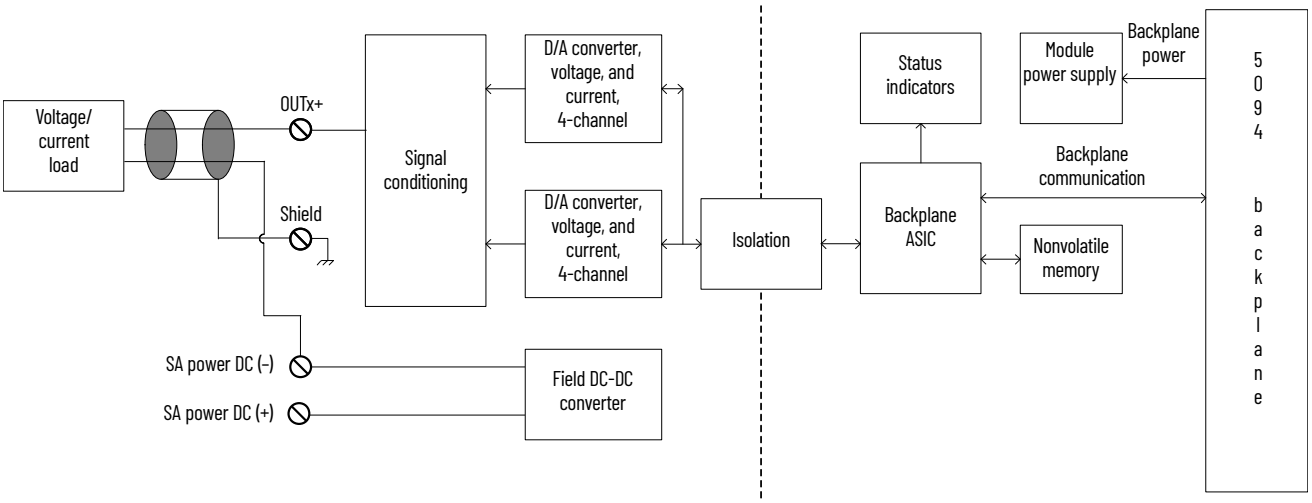

Technical Specifications - 5094-OF8, 5094-OF8XT

Attribute	5094-OF8, 5094-OF8XT
Outputs	8 single-ended
Output range, voltage	±10V 0...10V 0...5V
Output range, current	0...20 mA 4...20 mA
Resolution	16 bits across ±10.5V - 320 µV/bit 16 bits across 10.5V - 160 µV/bit 16 bits across 5V - 80 µV/bit 16 bits across 21 mA - 320 nA/bit
Drive capability	Voltage - 1000 Ω min Current - 500 Ω max
Capacitive load, max (voltage mode only)	1 µF
Inductive load, max (current mode only)	1 mH
Open circuit detection	Current mode only
Short circuit detection	Voltage mode only – output electronically limited to 16 mA or less
Data format	IEEE 754 32-bit floating point
Module conversion method	R-Ladder DAC, monotonicity with no missing codes
Conversion time per channel	25 µs
Scan time (per group 0...7)	2.0 ms
Step response time to 63% of value	Voltage mode: 18 µs max Current mode: 1 ms max
Overvoltage protection, max	±32V DC
Repeatability	0.05%
Calibrated accuracy at 25 °C (77 °F)	Voltage: 0.10% full scale Current: 0.10% full scale
Accuracy drift with temperature	Voltage: 47 ppm/ºC Current: 60 ppm/ºC

General Specifications - 5094-OF8, 5094-OF8XT

Attribute	5094-OF8, 5094-OF8XT
Backplane Power (BP) voltage	15V DC
Backplane Power (BP) current, max	75 mA
Sensor Actuator Power (SA) voltage range	18...32V DC
Sensor Actuator Power (SA) current, max	260 mA
Power dissipation, max	3.7 W
Thermal dissipation, max	12.62 BTU/hr
Isolation voltage	250V (continuous), Basic Insulation Type, System to Field No isolation between SA power and Output ports No isolation between individual Output ports
Calibration methods	Factory Calibrated User-performed (optional)
Module keying	Mechanical keying or electronic keying via programming software.
Indicators	1 green/red module status indicator 1 green/red SA power status indicator 8 yellow/red I/O status indicators
Terminal base (TB) assembly	**IMPORTANT:** Mounting bases (MBs) and removable terminal bases (RTBs) do not ship with the FLEX 5000 I/O modules. You must purchase a MB and a RTB individually for each I/O module. 5094-MB plus 5094-RTB3 (referred to in documentation as a non-orderable 5094-TB3) 5094-MB plus 5094-RTB3S (referred to in documentation as a non-orderable 5094-TB3S) 5094-MBXT plus 5094-RTB3XT (referred to in documentation as a non-orderable 5094-TB3XT) 5094-MBXT plus 5094-RTB3SXT (referred to in documentation as a non-orderable 5094-TB3SXT)
TB keying	3 ⊖ Ⓣ 1
Supported mounting orientation	Horizontal, horizontal and inverted, vertical, vertical and inverted.
Wire category[1]	2 - shielded ports 2 - power ports
Wire size - Signal	0.34...2.5 mm^2 (22...14 AWG) solid or stranded copper wire that is rated at 105 °C (221 °F), or greater, 1.2 mm (3/64 in.) insulation, max Ferrule according to DIN 46 228/1.
Wire size - Power	2.5 mm^2 (14 AWG) Cu multi-strand
Dimensions (HxWxD), approx	87.0 x 94.0 x 54.0 mm (3.43 x 3.70 x 2.13 in.)

General Specifications - 5094-OF8, 5094-OF8XT (Continued)

Attribute	5094-OF8, 5094-OF8XT
Weight, approx	108 g (0.24 lb)
Enclosure type	None (open-style)
North American temp code	T4
UKEX/ATEX temp code	T4
IECEx temp code	T4

(1) Use this Conductor Category information for planning conductor routing. See the Industrial Automation Wiring and Grounding Guidelines, publication 1770-4.1.
Use this Conductor Category information for planning conductor routing as described in the appropriate System Level Installation Manual.

5094-IF8IH and 5094-IF8IHXT Analog 8-channel Isolated Current/Voltage/HART/Digital Input Sensor Modules

This figure shows a wiring diagram for the 5094-IF8IH and 5094-IF8IHXT modules. You must connect a 24V DC power source to the left SA+/– terminals to provide field-side power.

5094-IF8IH and 5094-IF8IHXT Wiring Diagram — 2-wire Current/HART Transmitter

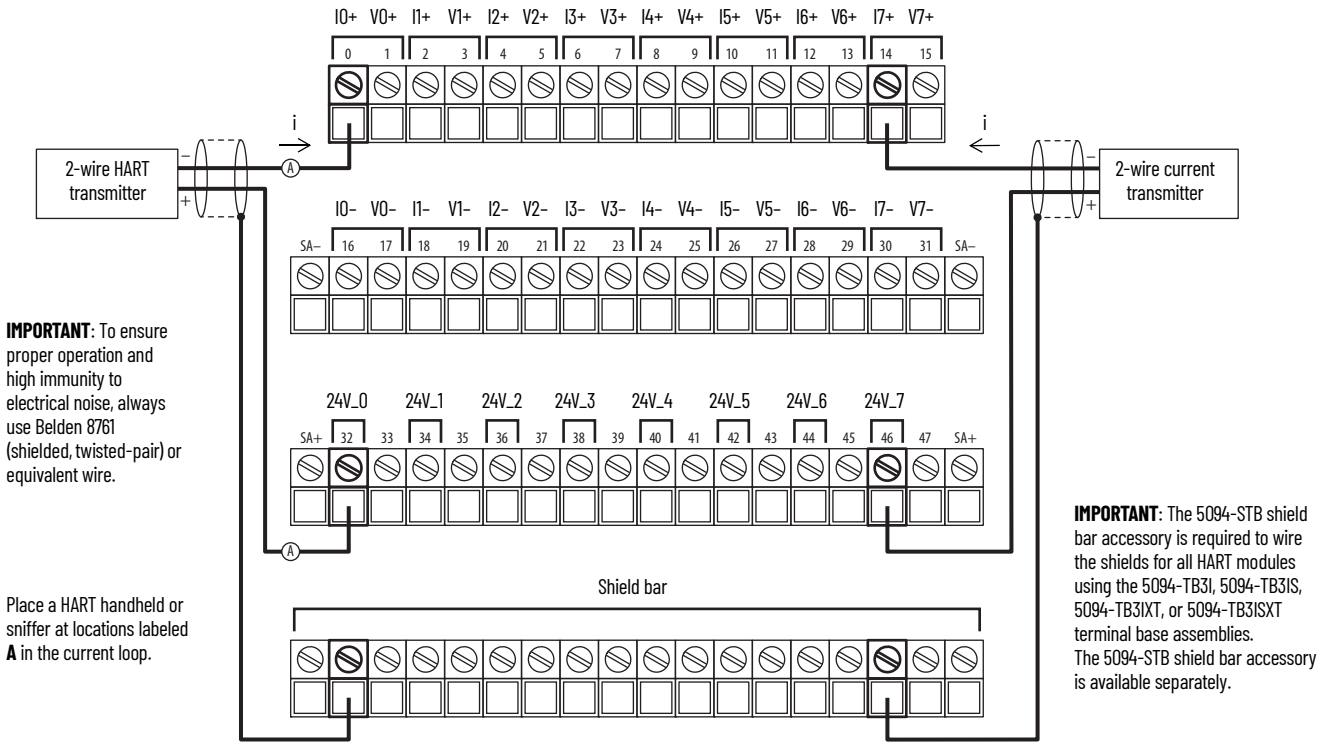

5094-IF8IH and 5094-IF8IHXT Wiring Diagram — 3-wire and 4-wire Current/HART Transmitter

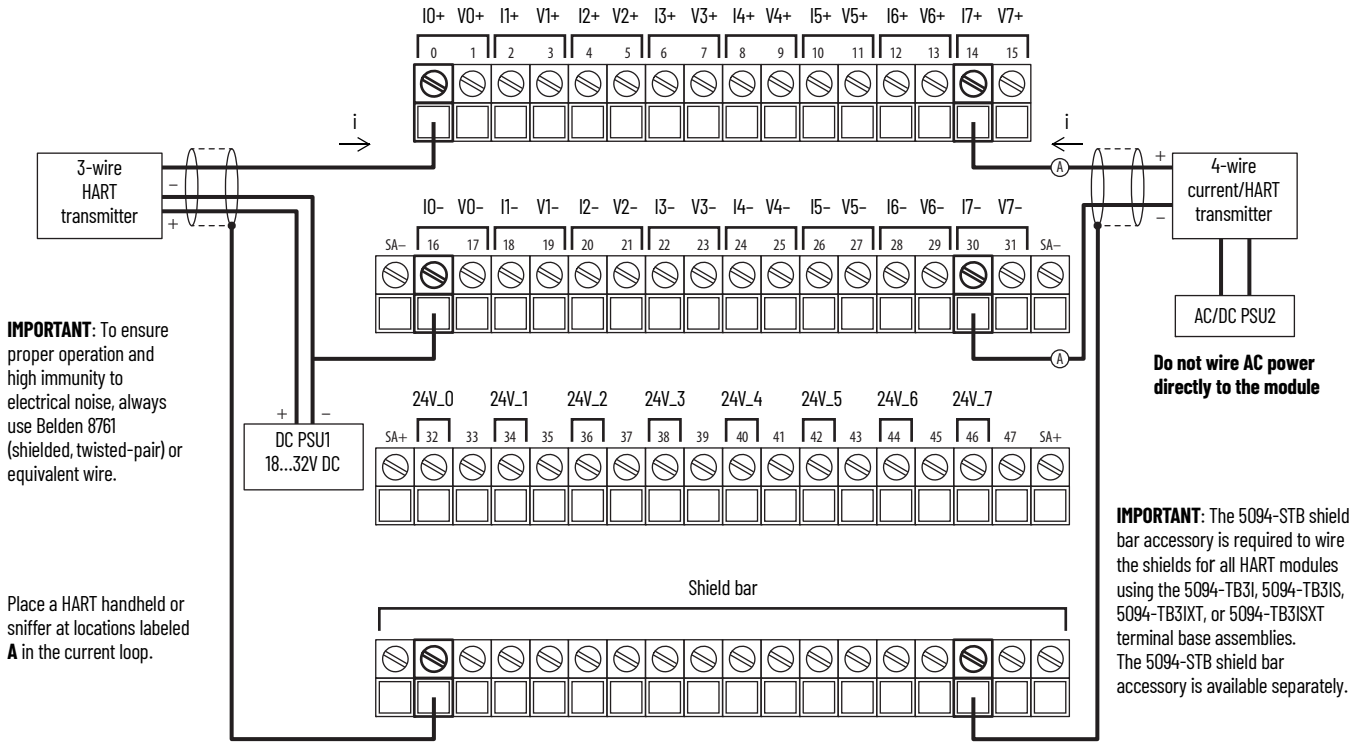

IMPORTANT: To ensure proper operation and high immunity to electrical noise, always use Belden 8761 (shielded, twisted-pair) or equivalent wire.

Place a HART handheld or sniffer at locations labeled **A** in the current loop.

Do not wire AC power directly to the module

IMPORTANT: The 5094-STB shield bar accessory is required to wire the shields for all HART modules using the 5094-TB3I, 5094-TB3IS, 5094-TB3IXT, or 5094-TB3ISXT terminal base assemblies. The 5094-STB shield bar accessory is available separately.

5094-IF8IH and 5094-IF8IHXT Wiring Diagram — Digital Input Sensor

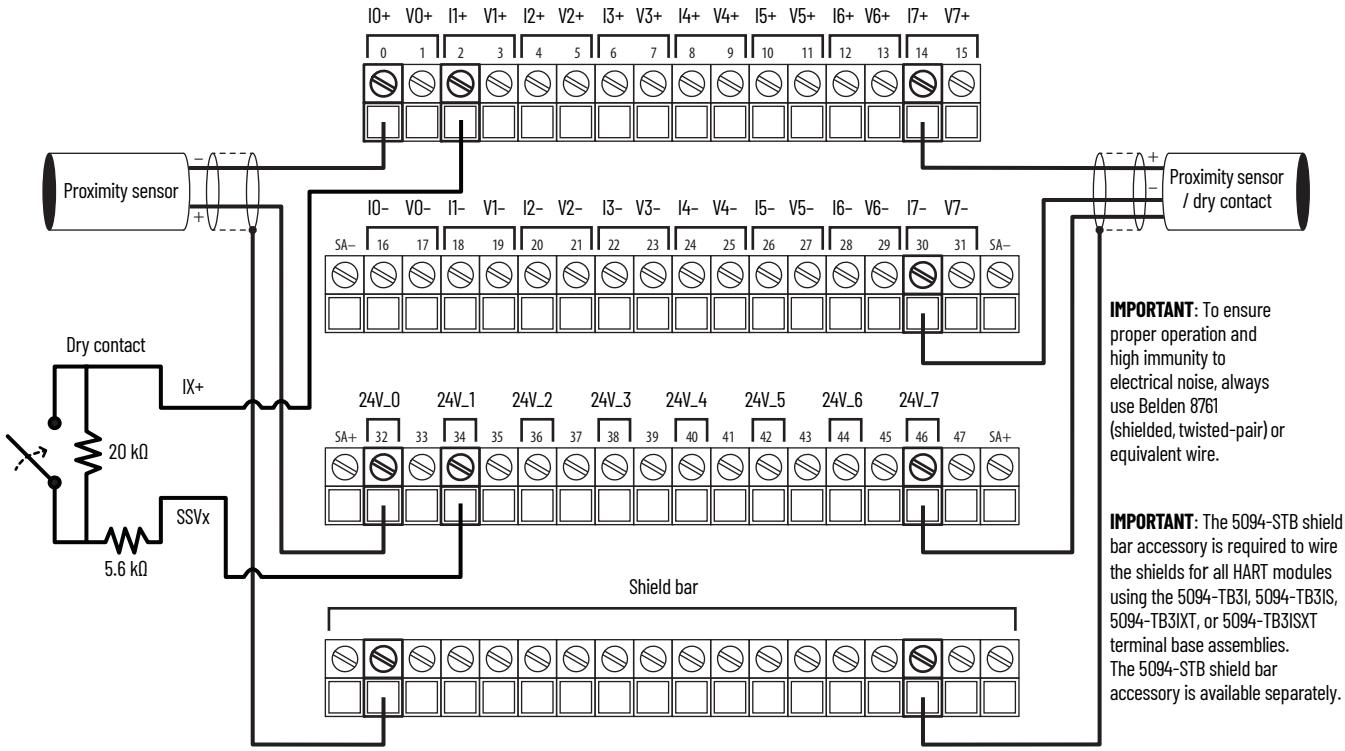

IMPORTANT: To ensure proper operation and high immunity to electrical noise, always use Belden 8761 (shielded, twisted-pair) or equivalent wire.

IMPORTANT: The 5094-STB shield bar accessory is required to wire the shields for all HART modules using the 5094-TB3I, 5094-TB3IS, 5094-TB3IXT, or 5094-TB3ISXT terminal base assemblies. The 5094-STB shield bar accessory is available separately.

5094-IF8IH and 5094-IF8IHXT Wiring Diagram — 2-wire and 4-wire Voltage Transmitter

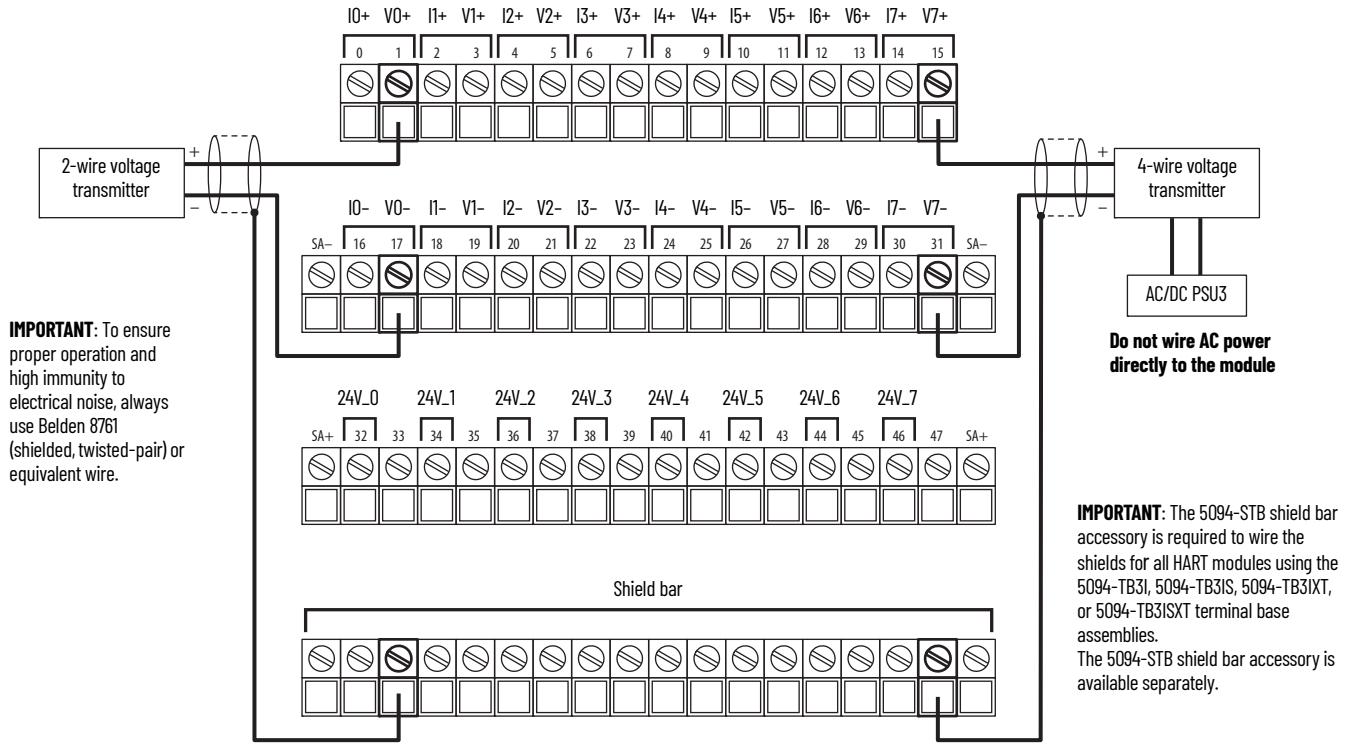

This figure shows a functional block diagram for the 5094-IF8IH and 5094-IF8IHXT modules in current/HART/Digital Input mode.

5094-IF8IH and 5094-IF8IHXT Functional Block Diagram — 2-wire Current/HART Transmitter/Digital Input Sensor

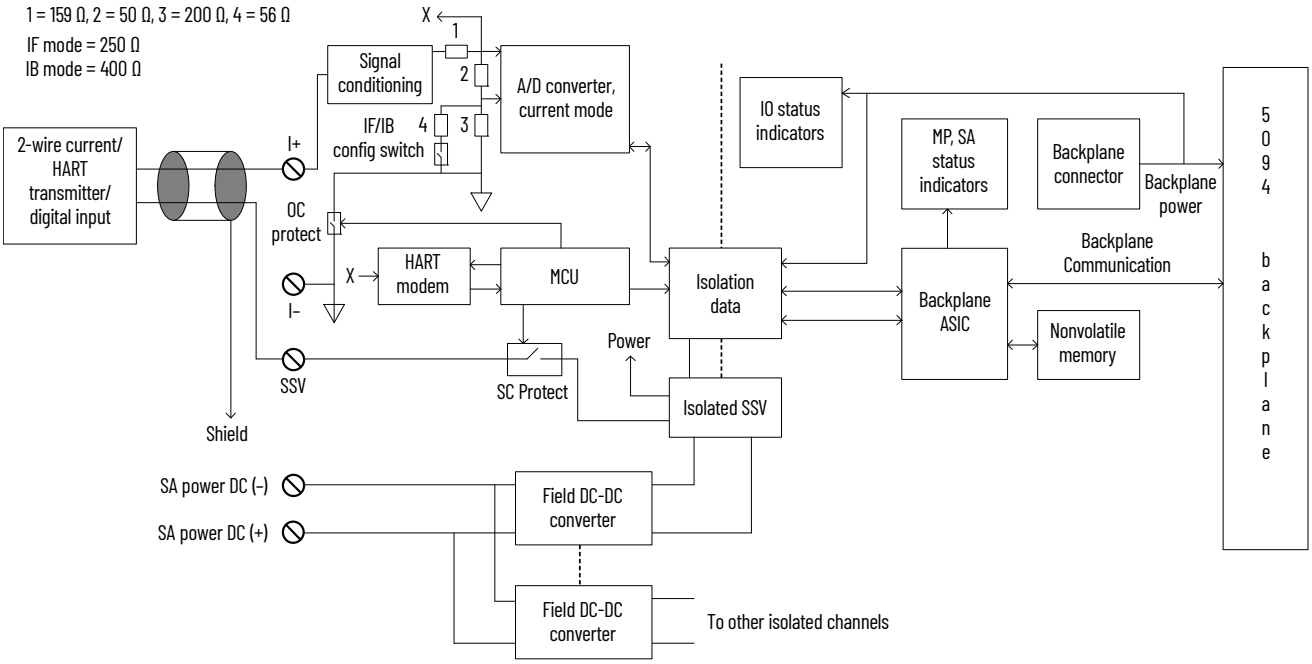

This figure shows a functional block diagram for the 5094-IF8IH and 5094-IF8IHXT modules in voltage mode.

5094-IF8IH and 5094-IF8IHXT Functional Block Diagram — 2-wire and 4-wire Voltage Transmitter

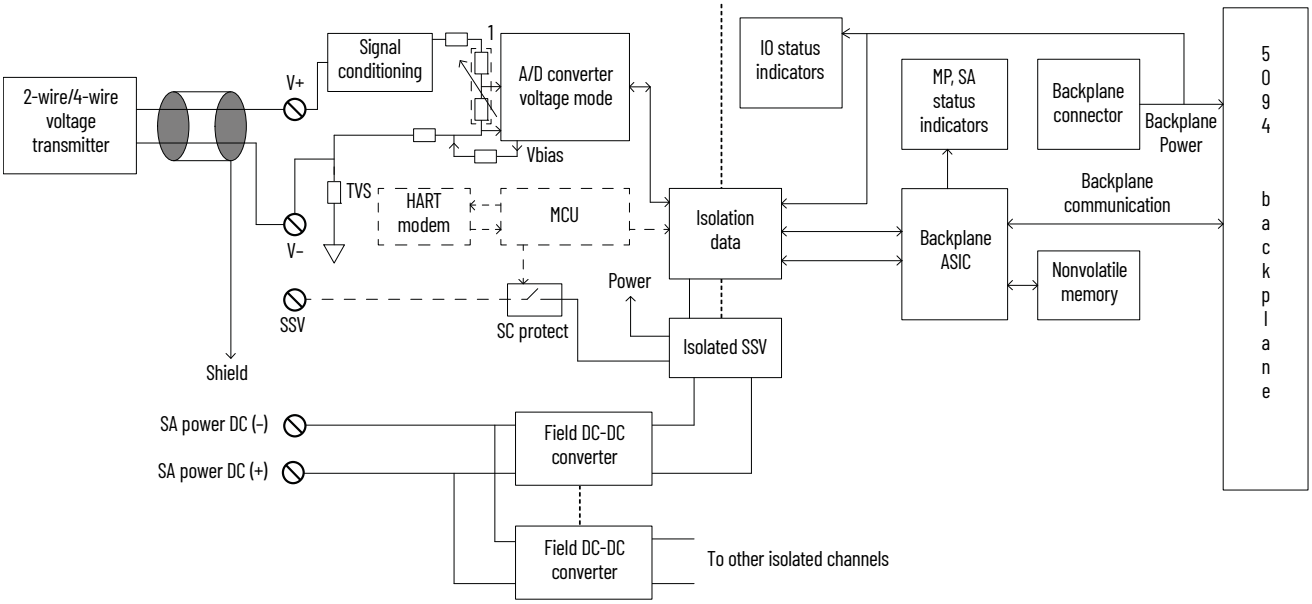

Technical Specifications - 5094-IF8IH, 5094-IF8IHXT

Attribute	5094-IF8IH, 5094-IF8IHXT
Analog Inputs	
Inputs	8 individually isolated Supports current sourcing and differential signal
Input range, voltage	±10V 0...10V 0...5V
Input range, current	0...20 mA 4...20 mA (HART)
Input impedance	Voltage: >1 MΩ Current: 250 Ω (±5 Ω), typical
Channel to channel isolation	250V (continuous), Basic Insulation Type
Module conversion method	Sigma-Delta, 24-bit ADC per channel
HART support	Yes, per channel HART modem
HART scan time	Typically 1 s Additional device variables, configured commands, pass through messages, handheld communicators, secondary masters, communication errors, or configuration changes can significantly increase the update time.
Effective resolution, voltage(1) (at 60 Hz notch filter)	±10V: 18 bits 0...10V: 17 bits 0...5V:16 bits
Effective resolution, current(1) (at 60 Hz notch filter)	0...20 mA: 17 bits 4...20 mA: 17 bits
Calibrated accuracy at 25 °C (77 °F)	Voltage: 0.05% full scale with 60 Hz filter Current: 0.05% full scale with 60 Hz filter HART enabled, typical values: 0.1% full scale with 10 Hz filter 0.15% full scale with 60 Hz filter 0.25% full scale with 100 Hz filter 0.3% full scale with 200 Hz filter 0.6% full scale with 500 Hz filter
Calibrated accuracy over 0...60 °C (32...140 °F) temperature range	Voltage: 0.1% full scale with 60 Hz filter Current: 0.1% full scale with 60 Hz filter HART enabled, typical values: 0.15% full scale with 10 Hz filter 0.2% full scale with 60 Hz filter 0.3% full scale with 100 Hz filter 0.35% full scale with 200 Hz filter 0.65% full scale with 500 Hz filter

Technical Specifications - 5094-IF8IH, 5094-IF8IHXT (Continued)

Attribute	5094-IF8IH, 5094-IF8IHXT
Calibrated accuracy over full temperature range, -40...+70 °C (-40...+158 °F)	Voltage: 0.2% full scale with 60 Hz filter Current: 0.2% full scale with 60 Hz filter HART enabled, typical values: 0.25% full scale with 10 Hz filter 0.3% full scale with 60 Hz filter 0.4% full scale with 100 Hz filter 0.45% full scale with 200 Hz filter 0.75% full scale with 500 Hz filter
Scan Time @ 10 kHz notch Per channel Per module	 1.0 ms 1.0 ms
Step response 63% @ 10 kHz notch	2.0 ms
Notch filter at min RPI (0.2 ms)	10 kHz
Notch filter frequency at RPI of 2.5 ms, min	500 Hz
Input notch filter (Hz) selections	5, 10, 15, 20, 50 (50/60 Hz simultaneous rejection), 60, 100, 200, 500 – **for HART mode** 5, 10, 15, 20, 50 (50/60 Hz simultaneous rejection), 60, 100, 200, 500, 1000, 2500, 5000, 10000.
Input digital filter	1st order lag, 0 ms (Default) - 32,767 ms (32.767 s)
HART handheld/secondary master compliance	Yes
Overvoltage protection, max	Voltage mode: ±32V DC Current mode: ±32V DC
Channel overcurrent protection	Current mode: 24.2 mA
SSV current, max	Current mode: 30.0 mA steady state
Sourcing voltage per channel, min	20V DC
Sourcing current per channel, max	25 mA
Short circuit recovery time	25 s
Data value during overrange condition	Voltage mode: 10.7V (±10V, 0...10V), 5.35V (0...5V) Current mode: 23 mA
Data value during underrange condition	Voltage mode: -10.7V (±10V), -0.041V (0...10V), -0.021V (0...5V) Current mode: 0.11 mA (0...20 mA), 3 mA (4...20 mA)
Open circuit detection time	10 ms min 1 s max
Onboard data alarming	Yes
Scaling to engineering units	Yes
Real-time channel sampling	Yes
Data format	IEEE 754 32-bit floating point
Timestamp of inputs	Yes
CIP Sync	Yes
Discrete Inputs	
On-state current, min	1.8 mA
Off-state current, max	1.6 mA
Channel impedance, max	4 kΩ
SSV current, max	30 mA per channel
Short-circuit current detection (for type 3-d input)	>6 mA
Open-wire detection (for type 3-d input)	<0.3 mA
Input delay time (screw to backplane), max Off to On On to Off	 2.0 ms 2.0 ms
Input min pulse width Off to On On to Off	 1.5 ms 1.5 ms
Input filter time Off to On On to Off	 Input filter delay: filter time + filter accuracy User-selectable filter time: 0...50 ms Filter accuracy: -0.6...+1.5 ms Input filter delay: filter time + filter accuracy User-selectable filter time: 0...50 ms Filter accuracy: 0...1.5 ms

(1) Notch filter dependent.

General Specifications - 5094-IF8IH, 5094-IF8IHXT

Attribute	5094-IF8IH, 5094-IF8IHXT
Backplane Power (BP) voltage	15V DC
Backplane Power (BP) current, max	35 mA
Sensor Actuator Power (SA) voltage range	Per channel: 21...27V DC Module: 18...32V DC
Sensor Actuator Power (SA) current, max	Per channel: 25 mA Module: 350 mA (Includes per channel SSV output, 21 mA @ 25V for 2-wire HART device loop power)
Power dissipation, max	Current mode: 3.5 W
Thermal dissipation, max	Current mode: 11.94 BTU/hr
Isolation voltage	250V (continuous) Basic Insulation Type: System to Field SA power to Channel SA power to SSV SA power to FE Channel to Channel Channel to FE
Calibration methods	Factory calibrated User-performed (optional)
Module keying	Mechanical keying or electronic keying via programming software.
Indicators	1 green/red module status indicator 1 green/red SA power status indicator 8 yellow/red I/O status indicators
Normal mode noise rejection ratio	65 dB @ 50/60 Hz, notch filter dependent
Terminal base (TB) assembly	**IMPORTANT:** Mounting bases (MBs) and removable terminal bases (RTBs) do not ship with the FLEX 5000 I/O modules. You must purchase a MB and a RTB individually for each I/O module. 5094-MB plus 5094-RTB3I (referred to in documentation as a non-orderable 5094-TB3I) 5094-MB plus 5094-RTB3IS (referred to in documentation as a non-orderable 5094-TB3IS) 5094-MBXT plus 5094-RTB3IXT (referred to in documentation as a non-orderable 5094-TB3IXT) 5094-MBXT plus 5094-RTB3ISXT (referred to in documentation as a non-orderable 5094-TB3ISXT)
TB keying	**5 3**
Supported mounting orientation	Horizontal, horizontal and inverted, vertical, vertical and inverted.
Wire category(1)	2 - shielded ports 2 - power ports
Wire size - Signal	0.34...2.5 mm^2 (22...14 AWG) solid or stranded copper wire that is rated at 105 °C (221 °F), or greater, 1.2 mm (3/64 in.) insulation, max Ferrule according to DIN 46 228/1.
Wire size - Power	2.5 mm^2 (14 AWG) Cu multi-strand
Dimensions (HxWxD), approx	87.0 x 94.0 x 54.0 mm (3.43 x 3.70 x 2.13 in.)
Weight, approx	160 g (0.353 lb)
Enclosure type	None (open-style)
North American temperature code	T4
UKEX/ATEX temp code	T4
IECEx temp code	T4

(1) Use this Conductor Category information for planning conductor routing. See the Industrial Automation Wiring and Grounding Guidelines, publication 1770-4.1.
Use this Conductor Category information for planning conductor routing as described in the appropriate System Level Installation Manual.

5094-OF8IH and 5094-OF8IHXT Analog Isolated Current/Voltage/HART Output Modules

This figure shows a wiring diagram for the 5094-OF8IH and 5094-OF8IHXT modules. You must connect a 24V DC power source to the left SA+/– terminals to provide field-side power.

5094-OF8IH and 5094-OF8IHXT Wiring Diagram — 2-wire and 4-wire Current/HART Actuator

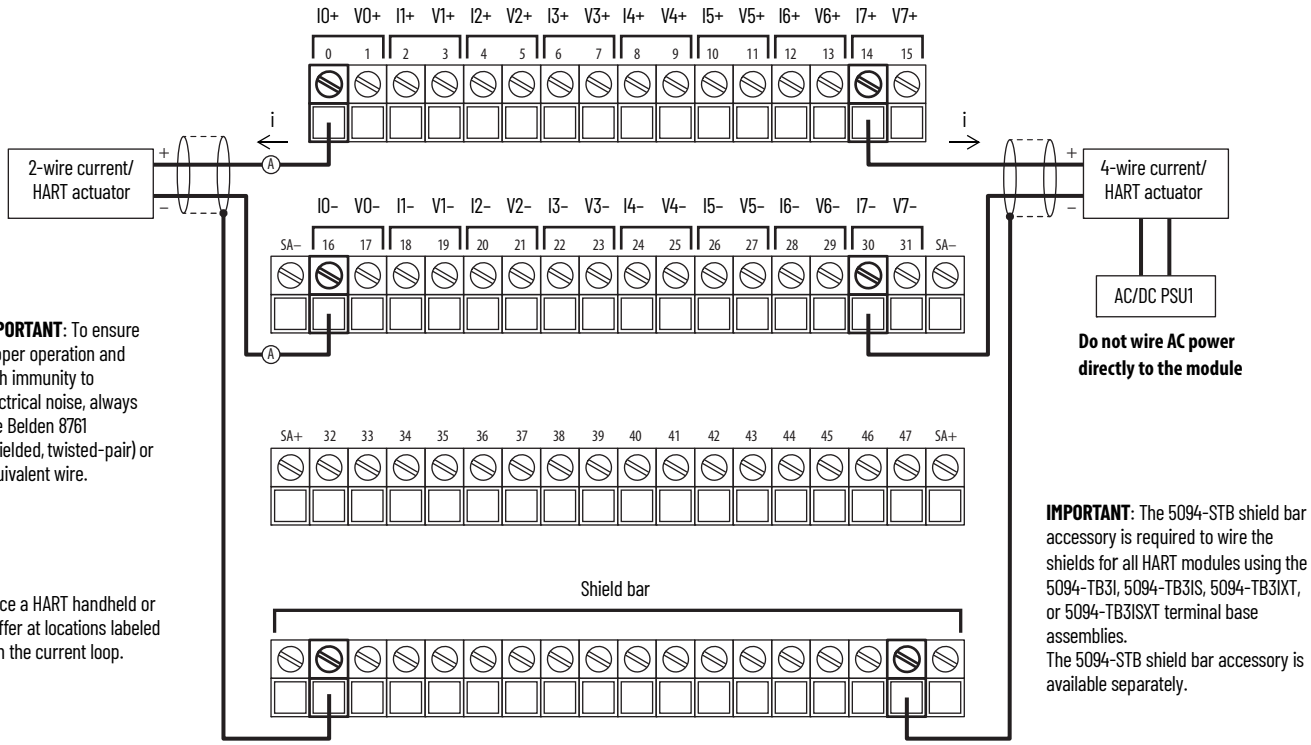

IMPORTANT: To ensure proper operation and high immunity to electrical noise, always use Belden 8761 (shielded, twisted-pair) or equivalent wire.

Place a HART handheld or sniffer at locations labeled **A** in the current loop.

IMPORTANT: The 5094-STB shield bar accessory is required to wire the shields for all HART modules using the 5094-TB3I, 5094-TB3IS, 5094-TB3IXT, or 5094-TB3ISXT terminal base assemblies.
The 5094-STB shield bar accessory is available separately.

5094-OF8IH and 5094-OF8IHXT Wiring Diagram — 2-wire and 4-wire Voltage Actuator

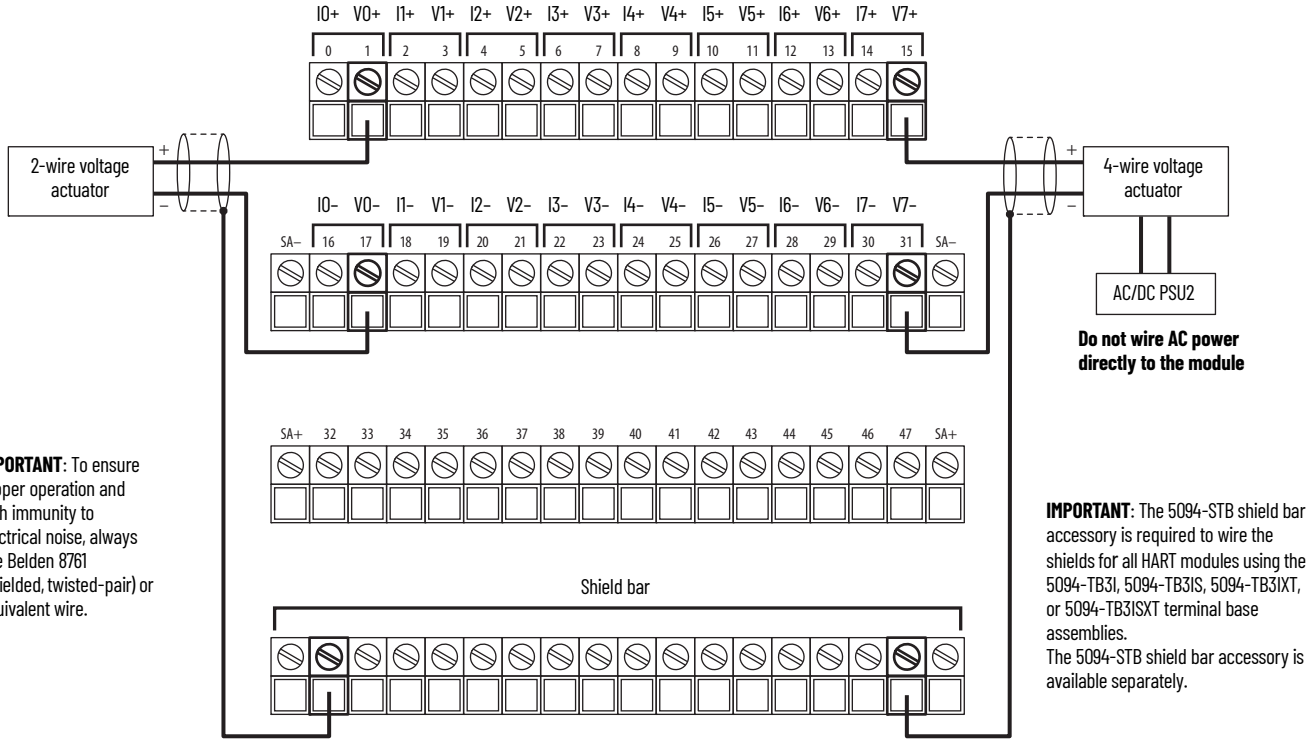

IMPORTANT: To ensure proper operation and high immunity to electrical noise, always use Belden 8761 (shielded, twisted-pair) or equivalent wire.

IMPORTANT: The 5094-STB shield bar accessory is required to wire the shields for all HART modules using the 5094-TB3I, 5094-TB3IS, 5094-TB3IXT, or 5094-TB3ISXT terminal base assemblies.
The 5094-STB shield bar accessory is available separately.

This figure shows a functional block diagram for the 5094-OF8IH and 5094-OF8IHXT modules in current mode.

5094-OF8IH and 5094-OF8IHXT Functional Block Diagram — 2-wire and 4-wire Current/HART Actuator

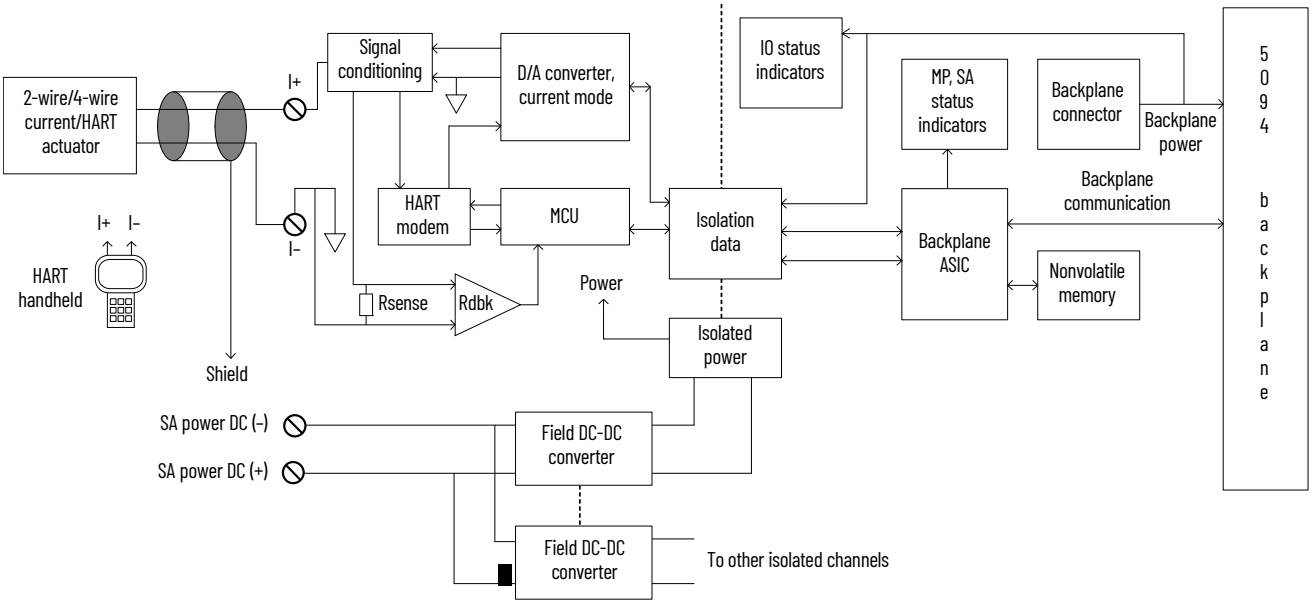

This figure shows a functional block diagram for the 5094-OF8IH and 5094-OF8IHXT modules in voltage mode.

5094-OF8IH and 5094-OF8IHXT Functional Block Diagram — 2-wire and 4-wire Voltage Actuator

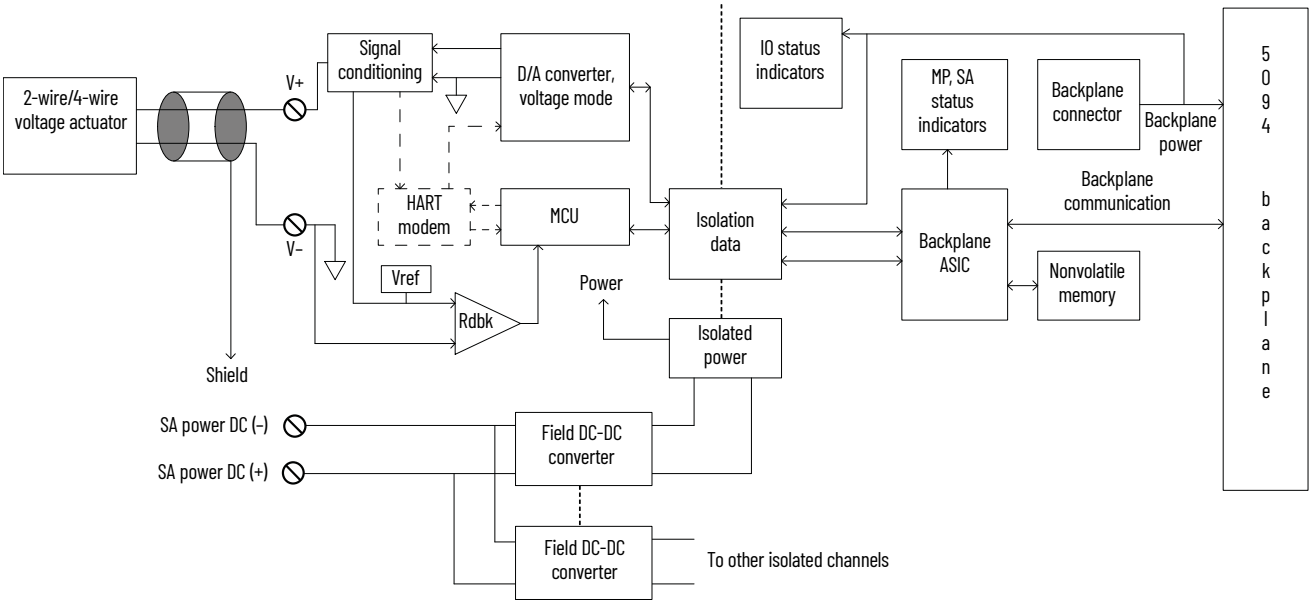

Technical Specifications - 5094-OF8IH, 5094-OF8IHXT

Attribute	5094-OF8IH, 5094-OF8IHXT
Outputs	8 individually isolated
Output range, voltage	±10V 0...10V 0...5V
Output range, current	0...20 mA 4...20 mA (HART)
Resolution	16 bits ±10V: 366 µV/bit 0...10V: 183 µV/bit 0...5V: 90 µV/bit 0...20 mA: 366 nA/bit 4...20 mA: 366 nA/bit
Drive capability	Voltage - 3000 Ω min Current - 750 Ω max
Capacitive load, max (voltage mode only)	1 µF
Inductive load, max (current mode only)	1 mH
Open circuit detection	Current mode only
Short circuit detection	Voltage mode only
Data format	IEEE 754 32-bit floating point
Channel to channel isolation	250V (continuous), Basic Insulation Type
Module conversion method	R-Ladder DAC, monotonicity with no missing codes
HART support	Yes, per channel HART modem
HART scan time	Typically 1 s Additional device variables, configured commands, pass through messages, handheld communicators, secondary masters, communication errors, or configuration changes can significantly increase the update time.
Conversion time per channel at 25 °C (77 °F), typical	Voltage mode: 0.3 ms Current mode: 0.6 ms
Scan time (all channels 0...7)	1.5 ms
Step response time to 63% of value	2.5 ms
Overvoltage protection, max	Voltage mode: ±32V DC Current mode: +32V DC
Repeatability	0.05%
Calibrated accuracy at 25 °C (77 °F)	Voltage: 0.05% full scale Current: 0.05% full scale
Calibrated accuracy over 0...60 °C (32...140 °F) temperature range	Voltage: 0.1% full scale Current: 0.1% full scale
Calibrated accuracy over full temperature range, -40...+70 °C (-40...+158 °F)	Voltage: 0.2% full scale Current: 0.2% full scale
Readback accuracy at 25 °C (77 °F)	Voltage: 1% full scale for ±10V and 0...10V; 1.5% full scale for 0...5V Current: 1% full scale HART mode: <5% full scale typical
HART handheld/secondary master compliance	Yes

General Specifications - 5094-OF8IH, 5094-OF8IHXT

Attribute	5094-OF8IH, 5094-OF8IHXT
Backplane Power (BP) voltage	15V DC
Backplane Power (BP) current, max	35 mA
Sensor Actuator Power (SA) voltage range	18...32V DC
Sensor Actuator Power (SA) current, max	800 mA
Power dissipation, max	Voltage: 4 W Current: 3.2 W
Thermal dissipation, max	12.62 BTU/hr
Isolation voltage	250V (continuous) Basic Insulation Type: System to Field SA power to Channel SA power to FE Channel to Channel Channel to FE
Calibration methods	Factory Calibrated User-performed (optional)

General Specifications - 5094-OF8IH, 5094-OF8IHXT (Continued)

Attribute	5094-OF8IH, 5094-OF8IHXT
Module keying	Mechanical keying or electronic keying via programming software.
Indicators	1 green/red module status indicator 1 green/red SA power status indicator 8 yellow/red I/O status indicators
Terminal base (TB) assembly	**IMPORTANT:** Mounting bases (MBs) and removable terminal bases (RTBs) do not ship with the FLEX 5000 I/O modules. You must purchase a MB and a RTB individually for each I/O module. 5094-MB plus 5094-RTB3I (referred to in documentation as a non-orderable 5094-TB3I) 5094-MB plus 5094-RTB3IS (referred to in documentation as a non-orderable 5094-TB3IS) 5094-MBXT plus 5094-RTB3IXT (referred to in documentation as a non-orderable 5094-TB3IXT) 5094-MBXT plus 5094-RTB3ISXT (referred to in documentation as a non-orderable 5094-TB3ISXT)
TB keying	3 ⊳⊲ 2
Supported mounting orientation	Horizontal, horizontal and inverted, vertical, vertical and inverted.
Wire category(1)	2 - shielded ports 2 - power ports
Wire size - Signal	0.34...2.5 mm^2 (22...14 AWG) solid or stranded copper wire that is rated at 105 °C (221 °F), or greater, 1.2 mm (3/64 in.) insulation, max Ferrule according to DIN 46 228/1.
Wire size - Power	2.5 mm^2 (14 AWG) Cu multi-strand
Dimensions (HxWxD), approx	87.0 x 94.0 x 54.0 mm (3.43 x 3.70 x 2.13 in.)
Weight, approx	165 g (0.143 lb)
Enclosure type	None (open-style)
North American temp code	T4
UKEX/ATEX temp code	T4
IECEx temp code	T4

(1) Use this Conductor Category information for planning conductor routing. See the Industrial Automation Wiring and Grounding Guidelines, publication 1770-4.1.
Use this Conductor Category information for planning conductor routing as described in the appropriate System Level Installation Manual.

Environmental Specifications and Certifications

The following tables provide the environmental specifications and certifications for the FLEX 5000 I/O analog modules.

Environmental Specifications - FLEX 5000 I/O Analog Modules

Attribute	5094-IF8, 5094-IF8XT, 5094-IY8, 5094-IY8XT, 5094-OF8, 5094-OF8XT, 5094-IF8IH, 5094-IF8IHXT, 5094-OF8IH, 5094-OF8IHXT
Temperature, operating IEC 60068-2-1 (Test Ab, Operating Cold), IEC 60068-2-2 (TestBb, Unpackaged Nonoperating Dry Heat), IEC 60068-2-14 (Test Na, Operating Thermal Shock)	-40 °C ≤ Ta ≤ +70 °C (-40 °F ≤ Ta ≤ +158 °F)
Temperature, surrounding air, max	70 °C (158 °F)
Temperature, nonoperating IEC 60068-2-1 (Test Ab, Unpackaged Nonoperating Cold), IEC 60068-2-2 (Test Bb, Unpackaged Nonoperating Dry Heat), IEC 60068-2-14 (Test Na, Unpackaged Nonoperating Thermal Shock)	-40...+85 °C (-40...+185 °F)
Relative humidity IEC 60068-2-30 (Test Db, Unpackaged Damp Heat)	5...95% noncondensing
Vibration IEC 60068-2-6 (Test Fc, Operating)	5 g @ 10...500 Hz
Shock, operating IEC 60068-2-27 (Test Ea, Unpackaged Shock)	30 g
Shock, nonoperating IEC 60068-2-27 (Test Ea, Unpackaged Shock)	30 g
Emissions	IEC 61000-6-4
ESD immunity IEC 61000-4-2	6 kV contact discharges 8 kV air discharges
Radiated RF immunity IEC 61000-4-3	10V/m with 1 kHz sine wave 80% AM from 80...6000 MHz
EFT/B immunity IEC 61000-4-4	±4 kV @ 5 kHz on power ports ±3 kV @ 5 kHz on shielded ports
Surge transient immunity IEC 61000-4-5	±1 kV line-line (DM) and ±2 kV line-earth (CM) on power ports ±2 kV line-earth (CM) on shielded ports
Conducted RF immunity IEC 61000-4-6	10V rms with 1 kHz sine wave 80% AM from 150 kHz...80 MHz
Corrosive resistance classification	ISA S71.04 G2 – **Non-XT catalogs** ISA S71.04 G3 – **XT catalogs**

Certifications - FLEX 5000 I/O Analog Modules

Certification[1]	5094-IF8, 5094-IF8XT, 5094-IY8, 5094-IY8XT, 5094-OF8, 5094-OF8XT, 5094-IF8IH, 5094-IF8IHXT, 5094-OF8IH, 5094-OF8IHXT, 5094-IJ2I, 5094-IJ2IXT
c-UL-us	UL Listed Industrial Control Equipment, certified for US and Canada. See UL File E322657. UL Listed for Class I, Division 2 Group A,B,C,D Hazardous Locations, certified for U.S. and Canada. See UL File E334470.
CE	European Union 2014/30/EU EMC Directive, compliant with: EN 61326-1; Meas./Control/Lab., Industrial Requirements EN 61000-6-2; Industrial Immunity EN 61000-6-4; Industrial Emissions EN 61131-2; Programmable Controllers (Clause 8, Zone A and B) European Union 2014/35/EU LVD, compliant with: EN 61010-2-201; Control Equipment Safety Requirements European Union 2011/65/EU RoHS, compliant with: EN 63000; Technical documentation
RCM	Australian Radiocommunications Act, compliant with: EN 61000-6-4; Industrial Emissions
Ex	UK Statutory Instrument 2016 No. 1107 and European Union 2014/34/EU ATEX Directive, compliant with: EN IEC 60079-0; General Requirements EN IEC 60079-7; Explosive Atmospheres, Protection "e" II 3 G Ex ec IIC T4 Gc DEMKO 17 ATEX 1907X DEMKO 19 ATEX 2303X - **5094-IF8IH, 5094-IF8IHXT, 5094-OF8IH, 5094-OF8IHXT only** UL22UKEX2394X UL22UKEX2655X - **5094-IF8IH, 5094-IF8IHXT, 5094-OF8IH, 5094-OF8IHXT only**
IECEx	IECEx System, compliant with: IEC 60079-0; General Requirements IEC 60079-7; Explosive Atmospheres, Protection "e" Ex ec IIC T4 Gc IECEx UL 17.0066X IECEx UL 19.0112X – **5094-IF8IH, 5094-IF8IHXT, 5094-OF8IH, 5094-OF8IHXT only**
KC	Korean Registration of Broadcasting and Communications Equipment, compliant with: Article 58-2 of Radio Waves Act, Clause 3

Certifications - FLEX 5000 I/O Analog Modules (Continued)

Certification[1]	5094-IF8, 5094-IF8XT, 5094-IY8, 5094-IY8XT, 5094-OF8, 5094-OF8XT, 5094-IF8IH, 5094-IF8IHXT, 5094-OF8IH, 5094-OF8IHXT, 5094-IJ2I, 5094-IJ2IXT
Morocco	Arrêté ministériel n° 6404-15 du 1 er muharram 1437 Arrêté ministériel n° 6404-15 du 29 ramadan 1436
EAC	Russian Customs Union TR CU 020/2011 EMC Technical Regulation Russian Customs Union TR CU 004/2011 LV Technical Regulation
CCC	CNCA-C23-01 强制性产品认证实施规则 防爆电气 CNCA-C23-01 CCC Implementation Rule Explosion-Proof Electrical Products
UKCA	2016 No. 1091 – Electromagnetic Compatibility Regulations 2016 No. 1101 – Electrical Equipment (Safety) Regulations 2016 No. 1107 – Equipment and Protective Systems Intended for Use in Potentially Explosive Atmospheres Regulations 2012 No. 3032 – Restriction of the Use of Certain Hazardous Substances in Electrical and Electronic Equipment Regulations

(1) When marked. See the Product Certifications website at rok.auto/certifications for declarations of conformity, certificates, and other certification details.

Specialty Modules

I/O Type	Catalog Number	Description	Page
High-speed counter	5094-HSC, 5094-HSCXT	High-speed counter modules	52
Serial Interface	5094-SERIAL, 5094-SERIALXT	Serial interface modules	60
Frequency input	5094-IJ2I, 5094-IJ2IXT	2-channel isolated-frequency input modules	66

5094-HSC and 5094-HSCXT High-speed Counter Modules

This figure shows a wiring diagram for the 5094-HSC and 5094-HSCXT modules that are connected to a differential encoder. You must connect a 24V DC power source to the left SA+/– terminals to provide field-side power.

5094-HSC and 5094-HSCXT Wiring Diagram — Differential Encoder

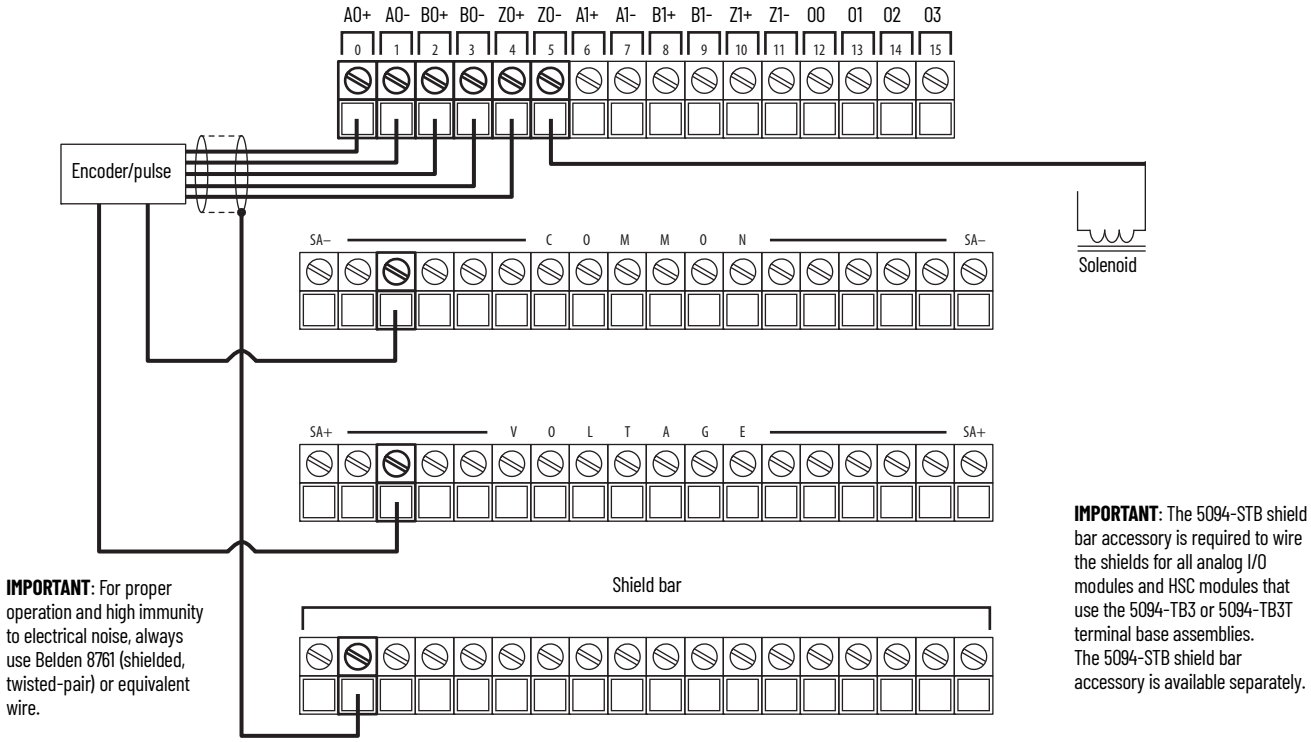

This figure shows a wiring diagram for the 5094-HSC and 5094-HSCXT modules that are connected to a single-ended encoder. You must connect a 24V DC power source to the left SA+/– terminals to provide field-side power.

5094-HSC and 5094-HSCXT Wiring Diagram — Single-ended Encoder

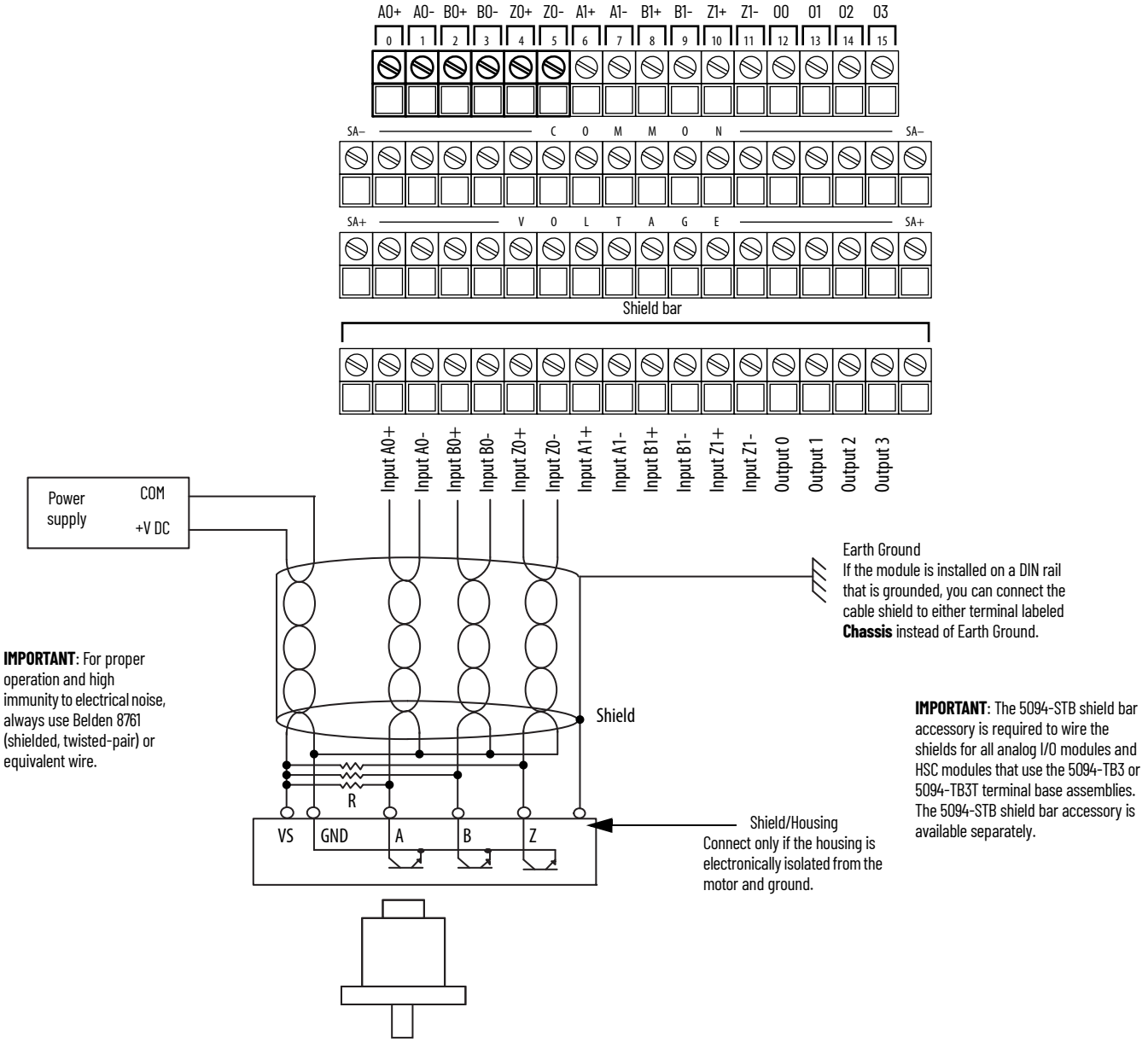

This figure shows a wiring diagram for the 5094-HSC and 5094-HSCXT modules that are connected to discrete input devices. You must connect a 24V DC power source to the left SA+/– terminals to provide field-side power.

5094-HSC and 5094-HSCXT Wiring Diagram — Discrete Input Devices

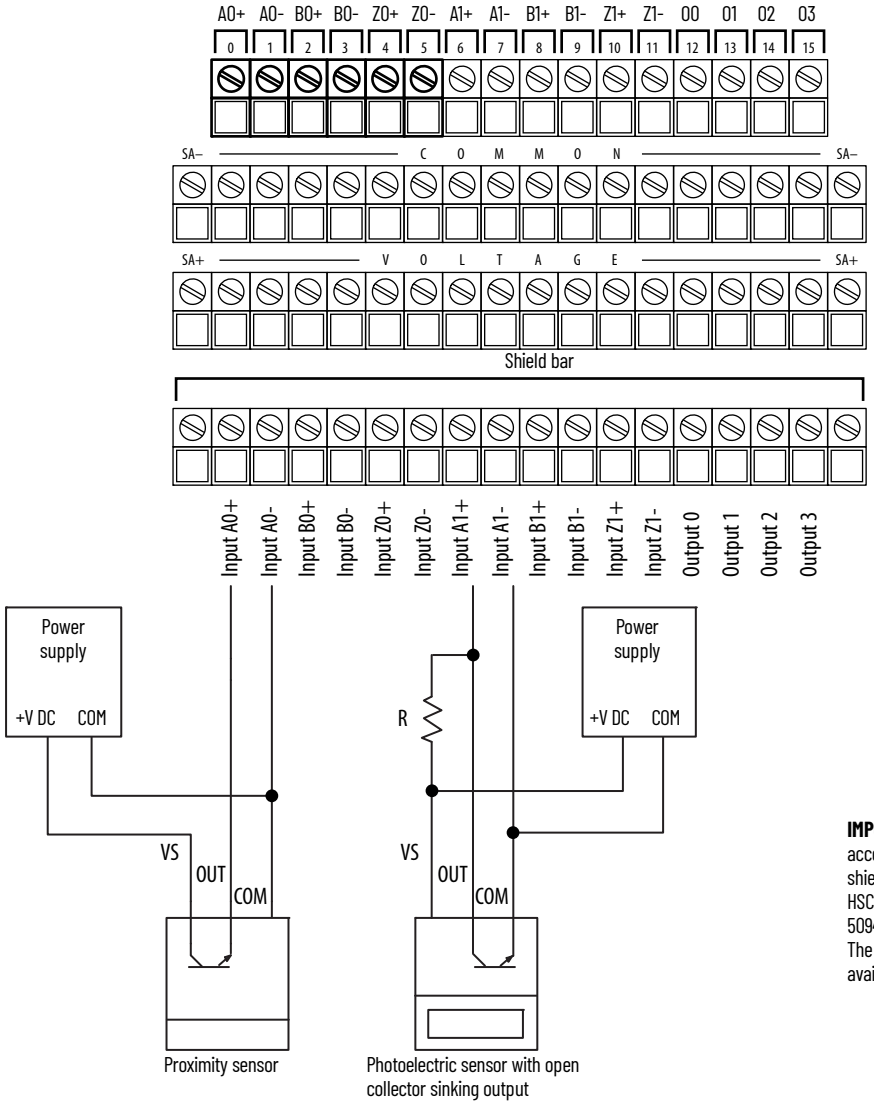

IMPORTANT: For proper operation and high immunity to electrical noise, always use Belden 8761 (shielded, twisted-pair) or equivalent wire.

IMPORTANT: The 5094-STB shield bar accessory is required to wire the shields for all analog I/O modules and HSC modules that use the 5094-TB3 or 5094-TB3T terminal base assemblies. The 5094-STB shield bar accessory is available separately.

This figure shows a wiring diagram for the 5094-HSC and 5094-HSCXT modules that are connected to a discrete output device. You must connect a 24V DC power source to the left SA+/– terminals to provide field-side power.

5094-HSC and 5094-HSCXT Wiring Diagram — Discrete Output Device

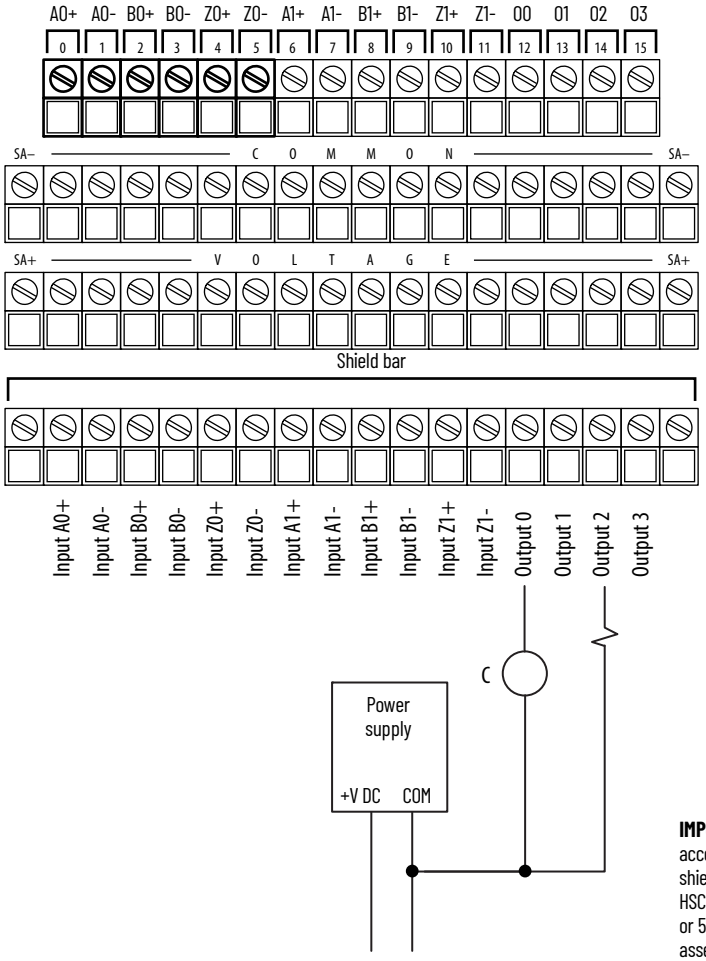

IMPORTANT: For proper operation and high immunity to electrical noise, always use Belden 8761 (shielded, twisted-pair) or equivalent wire.

IMPORTANT: The 5094-STB shield bar accessory is required to wire the shields for all analog I/O modules and HSC modules that use the 5094-TB3 or 5094-TB3T terminal base assemblies.
The 5094-STB shield bar accessory is available separately.

This figure shows functional block diagrams for the 5094-HSC and 5094-HSCXT modules inputs and outputs.

5094-HSC and 5094-HSCXT Functional Block Diagram

Module Inputs

IMPORTANT: This graphic shows the diagram for Counter 0. Counter 1 uses the same design.

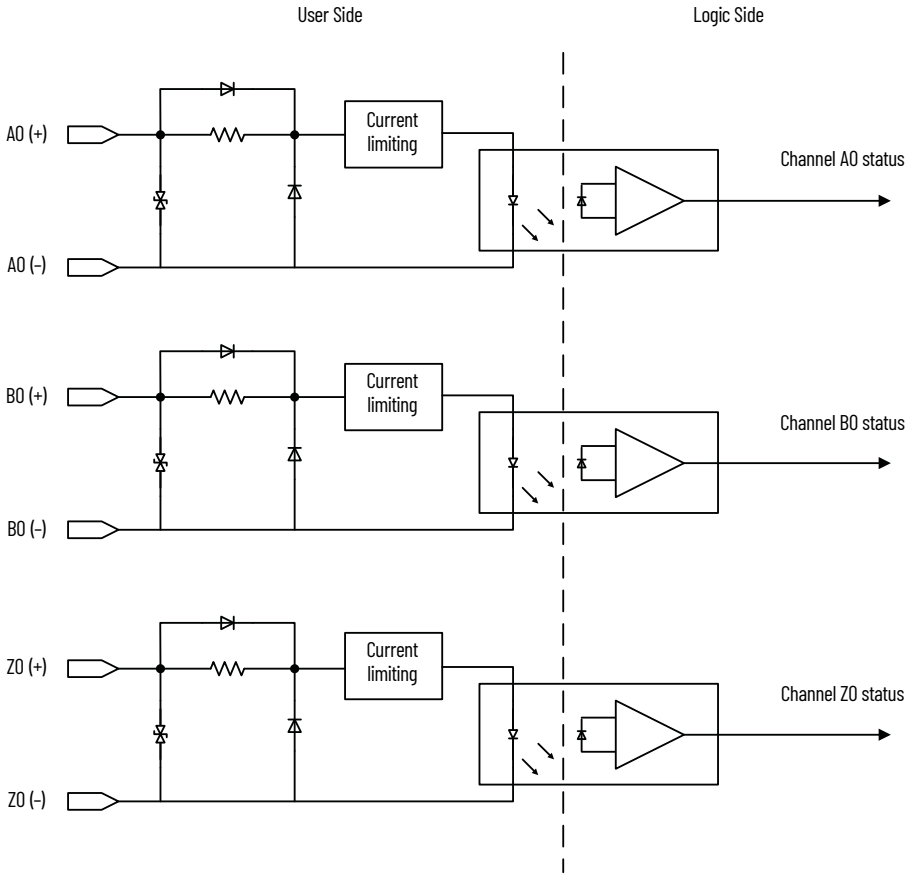

Module Outputs

Connections to the Power RTB on a FLEX 5000 EtherNet/IP™ adapter or external power supply.

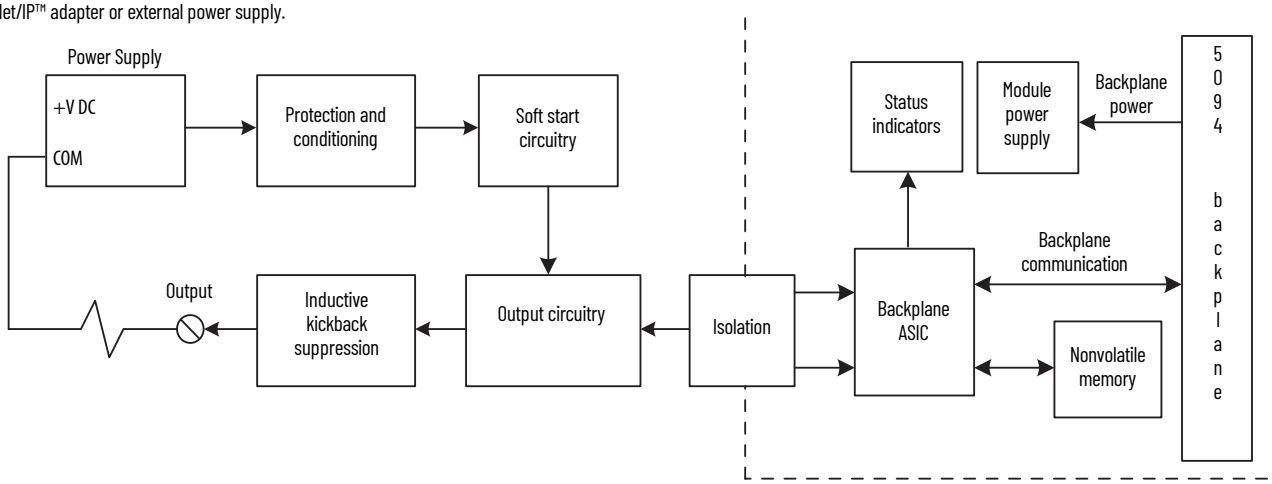

Technical Specifications - 5094-HSC, 5094-HSCXT

Attribute	5094-HSC, 5094-HSCXT
On-state voltage, min	18V DC
On-state voltage, nom	24V DC
On-state voltage, max	32V DC
On-state voltage drop, max	< 0.3V DC
On-state current, min	3 mA
Off-state voltage, max	1.5V
Off-state current, max	1 mA
Input ratings (IN), max	8 mA per channel @ 18...32V DC
Output ratings (OUT)	1 A @ 18...32V DC per channel 3 A per module
Pulse width, min	125 ns
Pulse separation, min	100 ns
Open load detection diagnostics	Yes (per channel diagnostics)
Output short circuit/overload/overtemp detection	Yes (per channel diagnostics)
Output short circuit/overload protection	Yes
Reverse voltage protection	32V DC
Overvoltage protection, max	36V (fuse protected, non-replaceable)
Pilot duty rating	0.5 A resistive and general pilot duty
Increased output current capability	Outputs can be paralleled to increase current capability by 1 A per channel. Total current per module is limited to 3 A.
Output states in program mode per point	Hold last state On Off (default)
Output states in fault mode per point	Hold Last State On Off (default)
Duration of fault mode per point	1 s 2 s 5 s 10 s Forever (default)
Output final state after fault mode per point	On Off (default)
CIP Sync	Supported

General Specifications - 5094-HSC, 5094-HSCXT

Attribute	5094-HSC, 5094-HSCXT
Inputs	2 quadrature (ABZ) differential inputs
Outputs	4 Channels (1 group of 4), sourcing
Voltage category	24V DC source
Input range, voltage	3...32V DC
Backplane Power (BP) voltage	15V DC
Backplane Power (BP) current, max	67 mA
Sensor Actuator Power (SA) voltage range	18...32V DC
Sensor Actuator Power (SA) current, max	3 A
Power dissipation, max	3.5 W
Thermal dissipation, max	11.9 BTU/hr
Isolation voltage	250V (continuous), Basic Insulation Type 250V isolation between input ports to output ports 250V isolation between I/O ports and Backplane Circuits No isolation between individual I/O ports Type tested @ 1500V AC for 60 s
Module keying	Mechanical keying or electronic keying via programming software.
Indicators	1 green/red module status indicator 1 green/red SA power status indicator 10 yellow/red I/O status indicator
Terminal base (TB) assembly	**IMPORTANT:** Mounting bases (MBs) and removable terminal bases (RTBs) do not ship with the FLEX 5000 I/O modules. You must purchase a MB and a RTB individually for each I/O module. 5094-MB plus 5094-RTB3 (referred to in documentation as a non-orderable 5094-TB3) 5094-MB plus 5094-RTB3S (referred to in documentation as a non-orderable 5094-TB3S) 5094-MBXT plus 5094-RTB3XT (referred to in documentation as a non-orderable 5094-TB3XT) 5094-MBXT plus 5094-RTB3SXT (referred to in documentation as a non-orderable 5094-TB3SXT)

General Specifications - 5094-HSC, 5094-HSCXT (Continued)

Attribute	5094-HSC, 5094-HSCXT
TB keying	4 ⊗ ⓣ 1
Supported mounting orientation	Horizontal, horizontal and inverted, vertical, vertical and inverted.
Wiring category(1)	2 - on output ports 2 - on output power ports 2 - on shielded counter ports
Wire size - Signal	0.34...2.5 mm^2 (22...14 AWG) solid or stranded copper wire that is rated at 105 °C (221 °F), or greater, 1.2 mm (3/64 in.) insulation, max Ferrule according to DIN 46 228/1.
Wire size - Power	2.5 mm^2 (14 AWG) Cu multi-strand
Dimensions (HxWxD), approx	87.0 x 94.0 x 54.0 mm (3.43 x 3.70 x 2.13 in.)
Weight, approx	143 g (0.32 lb)
Enclosure type	None (open-style)
North American temp code	T4
UKEX/ATEX temp code	T4
IECEx temp code	T4

(1) Use this Conductor Category information for planning conductor routing. See the Industrial Automation Wiring and Grounding Guidelines, publication 1770-4.1.

Environmental Specifications - 5094-HSC, 5094-HSCXT

Attribute	5094-HSC, 5094-HSCXT
Temperature, operating IEC 60068-2-1 (Test Ab, Operating Cold), IEC 60068-2-2 (TestBb, Unpackaged Nonoperating Dry Heat), IEC 60068-2-14 (Test Na, Operating Thermal Shock)	-40 °C ≤ Ta ≤ +70 °C (-40 °F ≤ Ta ≤ +158 °F
Temperature, surrounding air, max	70 °C (158 °F)
Temperature, nonoperating IEC 60068-2-1 (Test Ab, Unpackaged Nonoperating Cold), IEC 60068-2-2 (Test Bb, Unpackaged Nonoperating Dry Heat), IEC 60068-2-14 (Test Na, Unpackaged Nonoperating Thermal Shock)	-40...+85 °C (-40...+185 °F)
Relative humidity IEC 60068-2-30 (Test Db, Unpackaged Damp Heat)	5...95% noncondensing
Vibration IEC 60068-2-6 (Test Fc, Operating)	5 g @ 10...500 Hz
Shock, operating IEC 60068-2-27 (Test Ea, Unpackaged Shock)	30 g
Shock, nonoperating IEC 60068-2-27 (Test Ea, Unpackaged Shock)	30 g
Emissions	IEC 61000-6-4
ESD immunity IEC 61000-4-2	6 kV contact discharges 8 kV air discharges
Radiated RF immunity IEC 61000-4-3	10V/m with 1 kHz sine wave 80% AM from 80...6000 MHz
EFT/B immunity IEC 61000-4-4	±4 kV @ 5 kHz on power ports ±4 kV @ 5 kHz on output ports ±4 kV @ 5 kHz on shielded input ports
Surge transient immunity IEC 61000-4-5	±1 kV line-line (DM) and ±2 kV line-earth (CM) on power ports ±2 kV line-earth (CM) on output ports ±1 kV line-earth (CM) on input ports
Conducted RF immunity IEC 61000-4-6	10V rms with 1 kHz sine wave 80% AM from 150 kHz...80 MHz
Corrosion resistance classification	ISA S71.04 G2 - **5094-HSC** ISA S71.04 G3 - **5094-HSCXT**

Certifications - 5094-HSC, 5094-HSCXT

Certification[1]	5094-HSC, 5094-HSCXT
c-UL-us	UL Listed Industrial Control Equipment, certified for US and Canada. See UL File E322657. UL Listed for Class I, Division 2 Group A,B,C,D Hazardous Locations, certified for U.S. and Canada. See UL File E334470.
CE	European Union 2014/30/EU EMC Directive, compliant with: EN 61326-1; Meas./Control/Lab., Industrial Requirements EN 61000-6-2; Industrial Immunity EN 61000-6-4; Industrial Emissions EN 61131-2; Programmable Controllers (Clause 8, Zone A and B) European Union 2014/35/EU LVD, compliant with: EN 61010-2-201; Control Equipment Safety Requirements European Union 2011/65/EU RoHS, compliant with: EN 63000; Technical Documentation
RCM	Australian Radiocommunications Act, compliant with: EN 61000-6-4; Industrial Emissions
Ex	UK Statutory Instrument 2016 No. 1107 and European Union 2014/34/EU ATEX Directive, compliant with: EN IEC 60079-0; General Requirements EN IEC 60079-7; Potentially Explosive Atmospheres, Protection "e" II 3 G Ex ec IIC T4 Gc DEMKO 17 ATEX 1922X UL21UKEX2275X
IECEx	IECEx System, compliant with: IEC 60079-0; General Requirements IEC 60079-7; Potentially Explosive Atmospheres, Protection "e" Ex ec IIC T4 Gc IECEx UL 17.0075X
KC	Korean Registration of Broadcasting and Communications Equipment, compliant with: Article 58-2 of Radio Waves Act, Clause 3
Morocco	Arrêté ministériel n° 6404-15 du 1 er muharram 1437 Arrêté ministériel n° 6404-15 du 29 ramadan 1436
EAC	Russian Customs Union TR CU 020/2011 EMC Technical Regulation Russian Customs Union TR CU 004/2011 LV Technical Regulation
CCC	CNCA-C23-01 强制性产品认证实施规则 防爆电气 CNCA-C23-01 CCC Implementation Rule Explosion-Proof Electrical Products
UKCA	2016 No. 1091 – Electromagnetic Compatibility Regulations 2016 No. 1101 – Electrical Equipment (Safety) Regulations 2016 No. 1107 – Equipment and Protective Systems Intended for Use in Potentially Explosive Atmospheres Regulations 2012 No. 3032 – Restriction of the Use of Certain Hazardous Substances in Electrical and Electronic Equipment Regulations

(1) When marked. See the Product Certifications website at rok.auto/certifications for declarations of conformity, certificates, and other certification details.

5094-SERIAL and 5094-SERIALXT Serial Modules

This figure shows a wiring diagram for the 5094-SERIAL and 5094-SERIALXT modules that are connected to a differential encoder. You must connect a 24V DC power source to the left SA+/– terminals to provide field-side power.

5094-SERIAL and 5094-SERIALXT Wiring Diagram

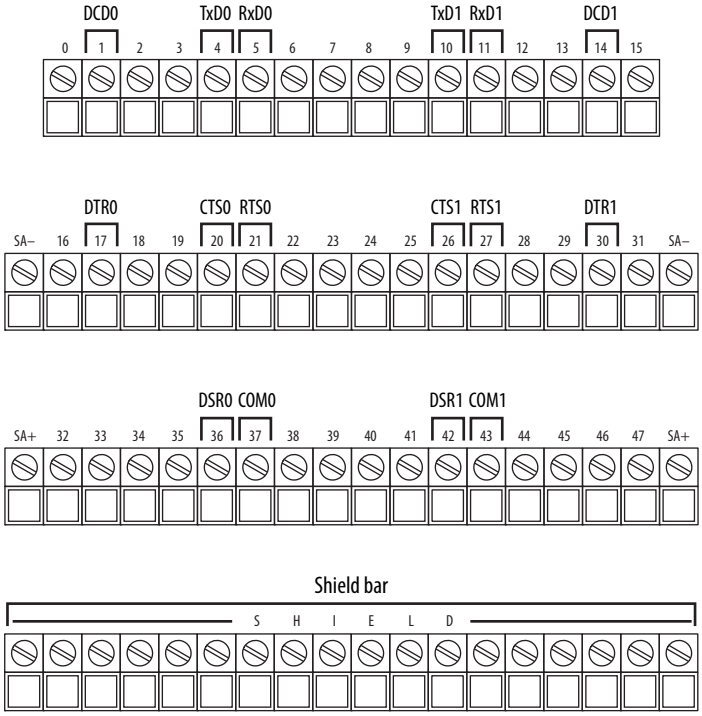

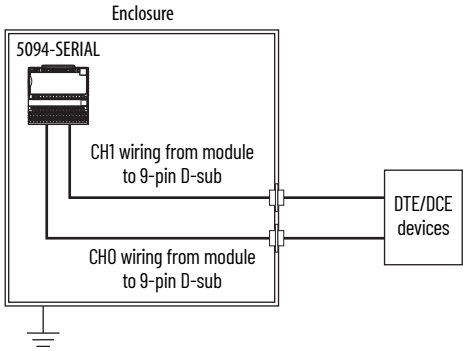

RS-232 Wiring Example

5094-SERIAL to DTE device without handshaking

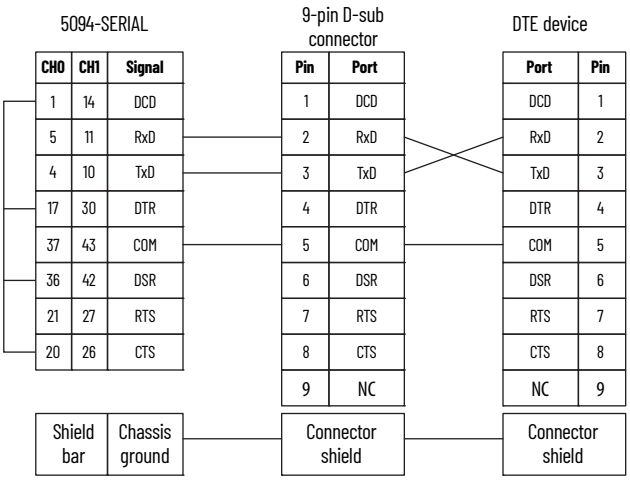

5094-SERIAL to DTE device with "Half-duplex"

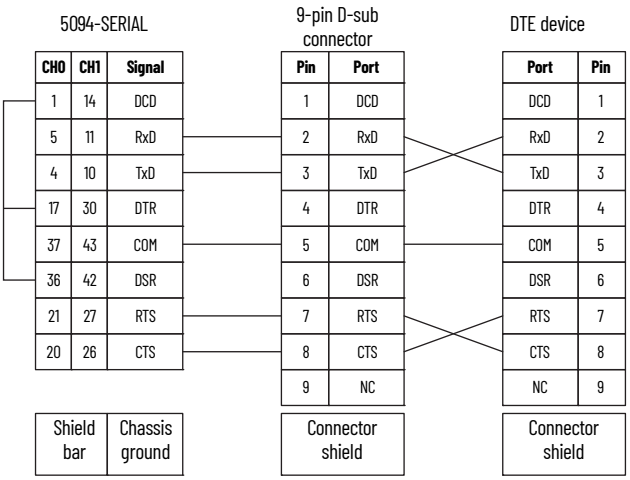

5094-SERIAL to DCE device with "Full-duplex"

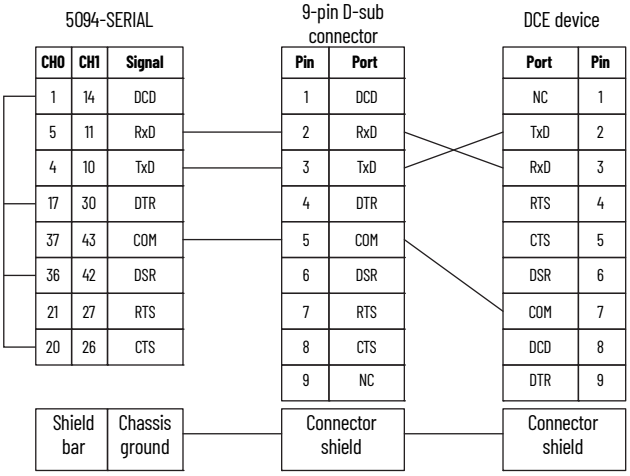

5094-SERIAL to DCE device (Modem) with "Full or Half-duplex"

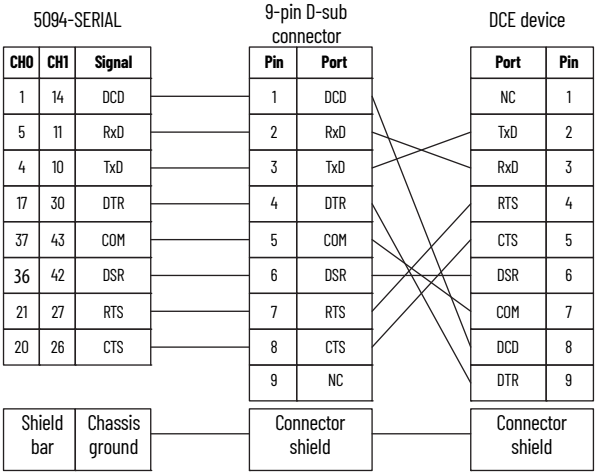

5094-SERIAL to DTE device with "Full or Half-duplex" or Null Modem

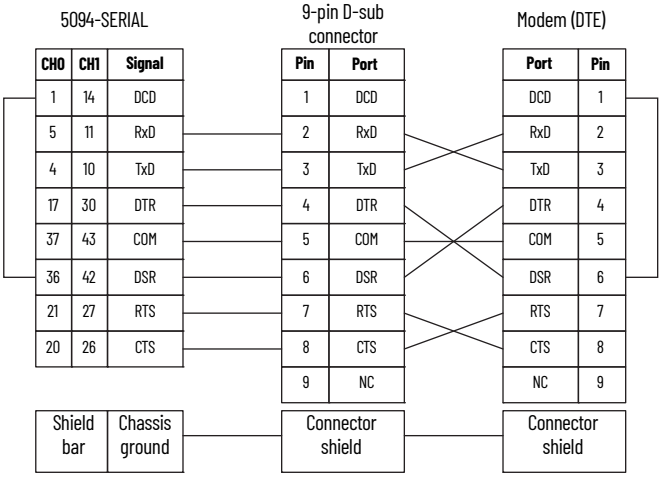

NC = No connection

RS-422 Wiring Example

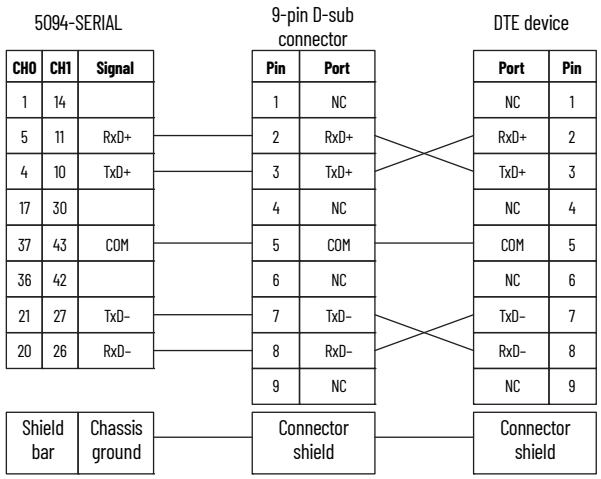

NC = No connection

IMPORTANT Place the termination resistor between RxD+ and RxD- to implement this wiring.

RS-485 Wiring Example

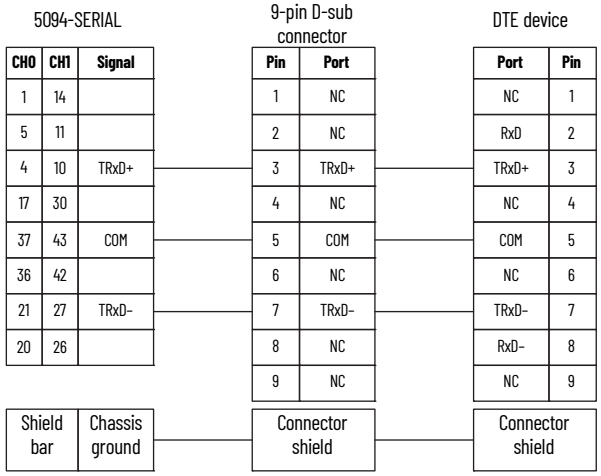

NC = No connection

IMPORTANT Place the termination resistor between TRxD+ and TRxD- to implement this wiring.

This figure shows functional block diagrams for the 5094-SERIAL and 5094-SERIALXT modules inputs and outputs.

5094-SERIAL and 5094-SERIALXT Functional Block Diagram

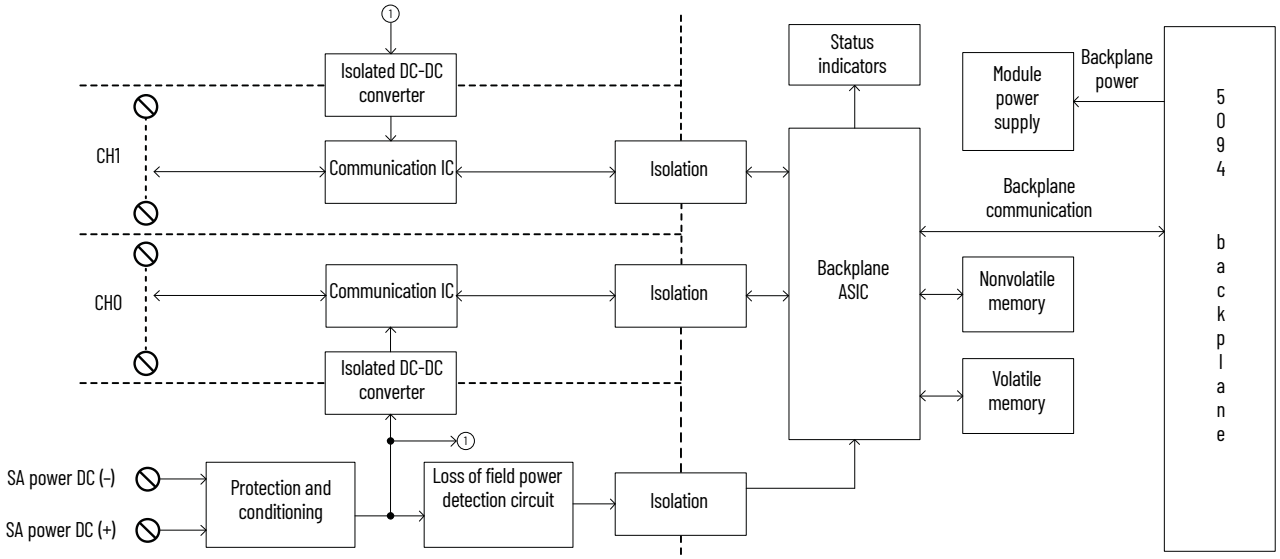

Technical Specifications - 5094-SERIAL, 5094-SERIALXT

Attribute	5094-SERIAL, 5094-SERIALXT
Operating modes	Generic ASCII Modbus RTU Modbus ASCII
Serial input voltage signal	3...25V DC regarding signal ground (SG) 0, Asserted, ON, Space, Active -3...-25V DC regarding signal ground (SG) 1, Disasserted, OFF, Mark, Inactive
Transmit transaction ID	0...255
Handshaking	RTS/CTS hardware handshake always enabled RTS/CTS can be controlled by the user
Supported communication rate	1200, 2400, 4800, 9600, 19200, 38400, 57600, 115200

General Specifications - 5094-SERIAL, 5094-SERIALXT

Attribute	5094-SERIAL, 5094-SERIALXT
Inputs	Two full-duplex (RS-232, RS-422) Two half-duplex (RS-485)
Backplane Power (BP) voltage	15V DC
Backplane Power (BP) current, max	80 mA
Sensor Actuator Power (SA) voltage range	18...32V DC
Sensor Actuator Power (SA) current, max	100 mA
Power dissipation, max	2.8 W
Thermal dissipation, max	9.55 BTU/hr
Isolation voltage	250V (continuous), Basic Insulation Type, SA power to Backplane 250V (continuous), Basic Insulation Type, SA power to Communication Channels 250V (continuous), Basic Insulation Type, SA power to Chassis Ground 250V (continuous), Basic Insulation Type, Between Communication Channels 250V (continuous), Basic Insulation Type, Backplane to Communication Channels 250V (continuous), Basic Insulation Type, Backplane to Chassis Ground 250V (continuous), Basic Insulation Type, Communication Channels to Chassis Ground
Module keying	Mechanical keying or electronic keying via programming software.
Indicators	1 green/red module status indicator 1 green/red SA power status indicator 1 transmit data (TXD) and 1 receive data (RXD) yellow/red status indicator per channel
Terminal base (TB) assembly	**IMPORTANT:** Mounting bases (MBs) and removable terminal bases (RTBs) do not ship with the FLEX 5000 I/O modules. You must purchase a MB and a RTB individually for each I/O module. 5094-MB plus 5094-RTB3I (referred to in documentation as a non-orderable 5094-TB3I) 5094-MB plus 5094-RTB3IS (referred to in documentation as a non-orderable 5094-TB3IS) 5094-MBXT plus 5094-RTB3IXT (referred to in documentation as a non-orderable 5094-TB3IXT) 5094-MBXT plus 5094-RTB3ISXT (referred to in documentation as a non-orderable 5094-TB3ISXT)
TB keying	2 ⊘ ⊘ 4
Supported mounting orientation	Horizontal, horizontal and inverted, vertical, vertical and inverted.

General Specifications - 5094-SERIAL, 5094-SERIALXT (Continued)

Attribute	5094-SERIAL, 5094-SERIALXT
Wiring category(1)	2 - power ports 2 - communication ports
Wire size - Signal	0.34...2.5 mm^2 (22...14 AWG) solid or stranded copper wire that is rated at 105 °C (221 °F), or greater, 1.2 mm (3/64 in.) insulation, max Ferrule according to DIN 46 228/1.
Wire size - Power	2.5 mm^2 (14 AWG) Cu multi-strand
Dimensions (HxWxD), approx	87.0 x 94.0 x 54.0 mm (3.43 x 3.70 x 2.13 in.)
Weight, approx	137 g (0.30 lb)
Enclosure type	None (open-style)
North American temp code	T4
UKEX/ATEX temp code	T4
IECEx temp code	T4

(1) Use this Conductor Category information for planning conductor routing. See the Industrial Automation Wiring and Grounding Guidelines, publication 1770-4.1.

Environmental Specifications - 5094-SERIAL, 5094-SERIALXT

Attribute	5094-SERIAL, 5094-SERIALXT
Temperature, operating IEC 60068-2-1 (Test Ab, Operating Cold), IEC 60068-2-2 (Test Bb, Unpackaged Nonoperating Dry Heat), IEC 60068-2-14 (Test Na, Operating Thermal Shock)	-40 °C ≤ Ta ≤ +70 °C (-40 °F ≤ Ta ≤ +158 °F)
Temperature, surrounding air, max	70 °C (158 °F)
Temperature, nonoperating IEC 60068-2-1 (Test Ab, Unpackaged Nonoperating Cold), IEC 60068-2-2 (Test Bb, Unpackaged Nonoperating Dry Heat), IEC 60068-2-14 (Test Na, Unpackaged Nonoperating Thermal Shock)	-40...+85 °C (-40...+185 °F)
Relative humidity IEC 60068-2-30 (Test Db, Unpackaged Damp Heat)	5...95% noncondensing
Vibration IEC 60068-2-6 (Test Fc, Operating)	4 g @ 10...500 Hz
Shock, operating IEC 60068-2-27 (Test Ea, Unpackaged Shock)	25 g
Shock, nonoperating IEC 60068-2-27 (Test Ea, Unpackaged Shock)	30 g
Emissions	IEC 61000-6-4
ESD immunity IEC 61000-4-2	6 kV contact discharges 8 kV air discharges
Radiated RF immunity IEC 61000-4-3	10V/m with 1 kHz sine wave 80% AM from 80...2000 MHz 10V/m with 200 Hz 50% pulse 100% AM @ 900 MHz 10V/m with 200 Hz 50% pulse 100% AM @ 1890 MHz 10V/m with 1 kHz sine wave 80% AM from 2000...6000 MHz
EFT/B immunity IEC 61000-4-4	±2 kV @ 5 kHz on power ports ±2 kV @ 5 kHz on output ports ±2 kV @ 5 kHz on shielded input ports
Surge transient immunity IEC 61000-4-5	±1 kV line-line (DM) and ±2 kV line-earth (CM) on power ports ±2 kV line-earth (CM) on communication ports
Conducted RF immunity IEC 61000-4-6	10V rms with 1 kHz sine wave 80% AM from 150 kHz...80 MHz
Corrosion resistance classification	ISA S71.04 G2 – **5094-SERIAL** ISA S71.04 G3 – **5094-SERIALXT**

Certifications - 5094-SERIAL, 5094-SERIALXT

Certification(1)	5094-SERIAL, 5094-SERIALXT
c-UL-us	UL Listed Industrial Control Equipment, certified for US and Canada. See UL File E322657. UL Listed for Class I, Division 2 Group A,B,C,D Hazardous Locations, certified for U.S. and Canada. See UL File E334470.
CE	European Union 2014/30/EU EMC Directive, compliant with: EN 61326-1; Meas./Control/Lab., Industrial Requirements EN 61000-6-2; Industrial Immunity EN 61000-6-4; Industrial Emissions EN 61131-2; Programmable Controllers (Clause 8, Zone A and B) European Union 2014/35/EU LVD, compliant with: EN 61010-2-201; Control Equipment Safety Requirements European Union 2011/65/EU RoHS, compliant with: EN 63000; Technical Documentation

Certifications - 5094-SERIAL, 5094-SERIALXT (Continued)

RCM	Australian Radiocommunications Act, compliant with: EN 61000-6-4; Industrial Emissions
Ex	UK Statutory Instrument 2016 No. 1107 and European Union 2014/34/EU ATEX Directive, compliant with: EN IEC 60079-0; General Requirements EN IEC 60079-7; Explosive Atmospheres, Protection "e" II 3 G Ex ec IIC T4 Gc DEMKO 17 ATEX 1907X UL22UKEX2394X
IECEx	IECEx System, compliant with: IEC 60079-0; General Requirements IEC 60079-7; Explosive Atmospheres, Protection "e" Ex ec IIC T4 Gc IECEx UL 17.0066X
KC	Korean Registration of Broadcasting and Communications Equipment, compliant with: Article 58-2 of Radio Waves Act, Clause 3
Morocco	Arrêté ministériel n° 6404-15 du 1 er muharram 1437 Arrêté ministériel n° 6404-15 du 29 ramadan 1436
EAC	Russian Customs Union TR CU 020/2011 EMC Technical Regulation Russian Customs Union TR CU 004/2011 LV Technical Regulation
CCC	CNCA-C23-01 强制性产品认证实施规则 防爆电气 CNCA-C23-01 CCC Implementation Rule Explosion-Proof Electrical Products
UKCA	2016 No. 1091 – Electromagnetic Compatibility Regulations 2016 No. 1101 – Electrical Equipment (Safety) Regulations 2016 No. 1107 – Equipment and Protective Systems Intended for Use in Potentially Explosive Atmospheres Regulations 2012 No. 3032 – Restriction of the Use of Certain Hazardous Substances in Electrical and Electronic Equipment Regulations

(1) When marked. See the Product Certifications website at rok.auto/certifications for declarations of conformity, certificates, and other certification details.

5094-IJ2I and 5094-IJ2IXT 2-channel Isolated Frequency Standard Input Modules

These figures show wiring diagrams for the 5094-IJ2I and 5094-IJ2IXT modules. You must connect a 24V DC power source to the left SA+/– terminals to provide field-side power.

IMPORTANT
- We recommend that you use twisted-pair, individually shielded cable with a maximum length of 300 m (1000 ft) when connecting a differential encoder.
  For more information on the cable type to use, see the encoder documentation.
- You must connect a 24V DC power source to the left SA+/– terminals to provide field-side power.
- The 5094-STB shield bar is required to wire the shields for the 5094-IJ2I and 5094-IJ2IXT modules. Order catalog number 5094-STB-QTY5 (pack of 5).
- All shield-bar screws are bussed together. You must ground the shield bar to functional earth.

This figure shows a wiring diagram for the 5094-IJ2I and 5094-IJ2IXT modules connected to a magnetic pickup sensor.

5094-IJ2I and 5094-IJ2IXT Wiring Diagram — Magnetic Pickup Sensor

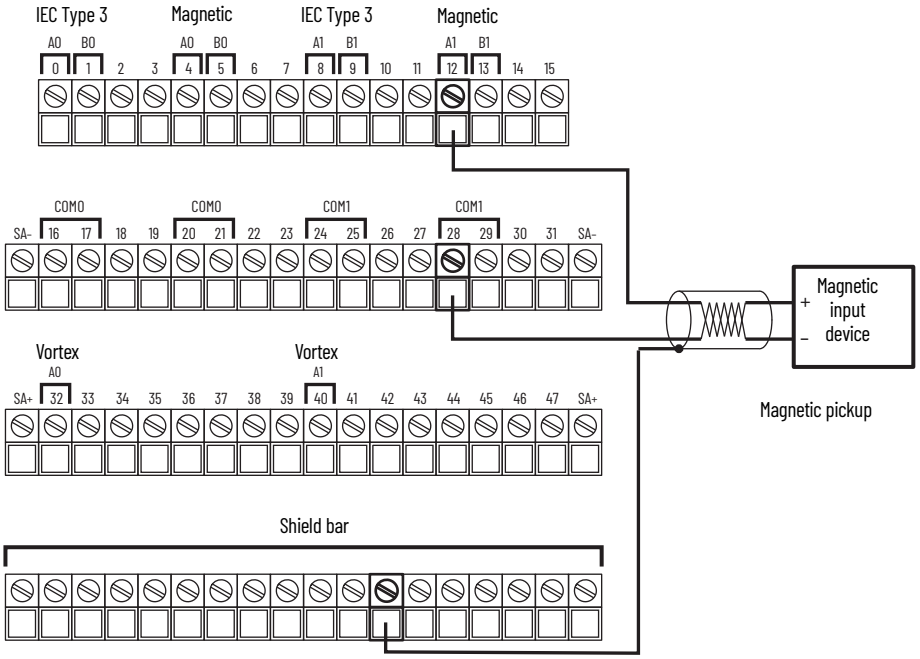

This figure shows a wiring diagram for the 5094-IJ2I and 5094-IJ2IXT modules connected to a vortex flowmeter.

5094-IJ2I and 5094-IJ2IXT Wiring Diagram — Vortex Flowmeter

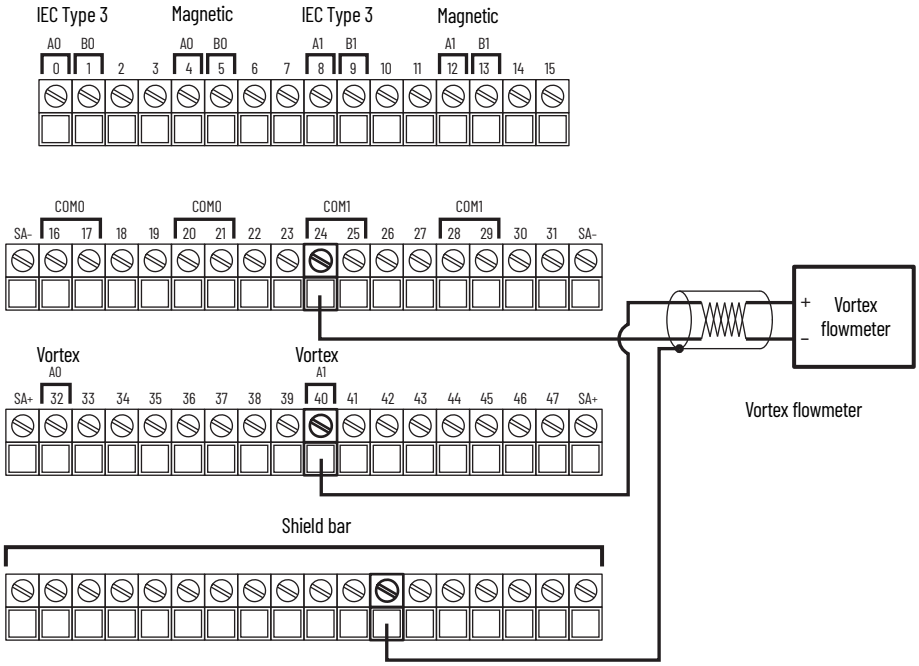

This figure shows a wiring diagram for the 5094-IJ2I and 5094-IJ2IXT modules connected to a 2-wire 24V DC IEC Type 3 input.

5094-IJ2I and 5094-IJ2IXT Wiring Diagram — 2-wire 24V DC IEC TYPE 3 Input

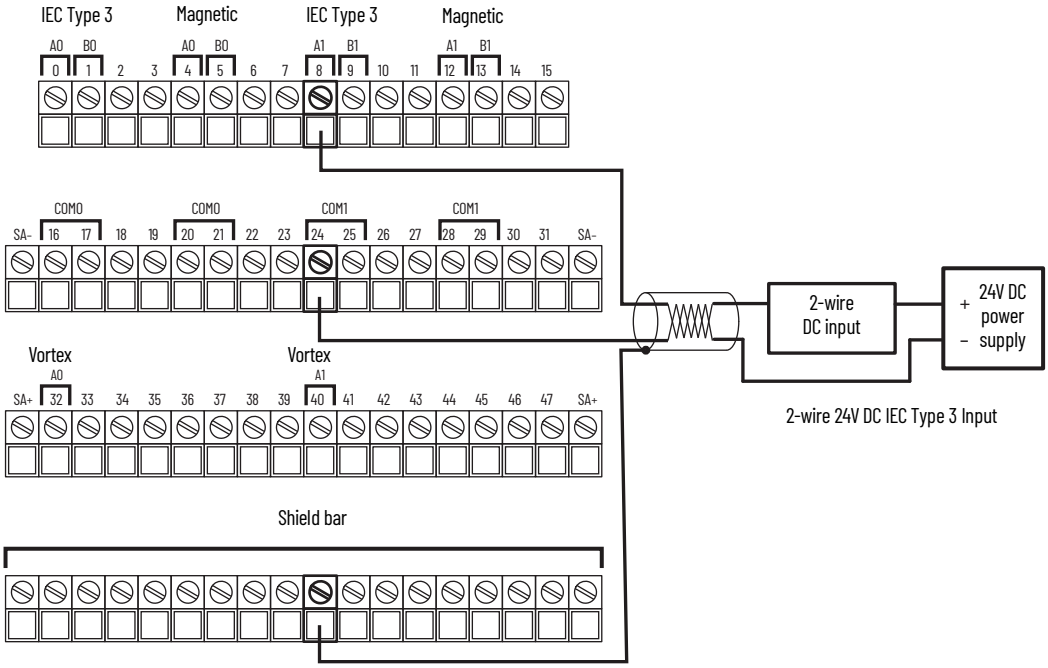

This figure shows a wiring diagram for the 5094-IJ2I and 5094-IJ2IXT modules connected to 4-wire 24V DC IEC Type 3 input and 3-wire 24V DC IEC TYPE 3 input.

5094-IJ2I and 5094-IJ2IXT Wiring Diagram — 4-wire 24V DC IEC Type 3 Input/ 3-wire 24V DC IEC TYPE 3 Input

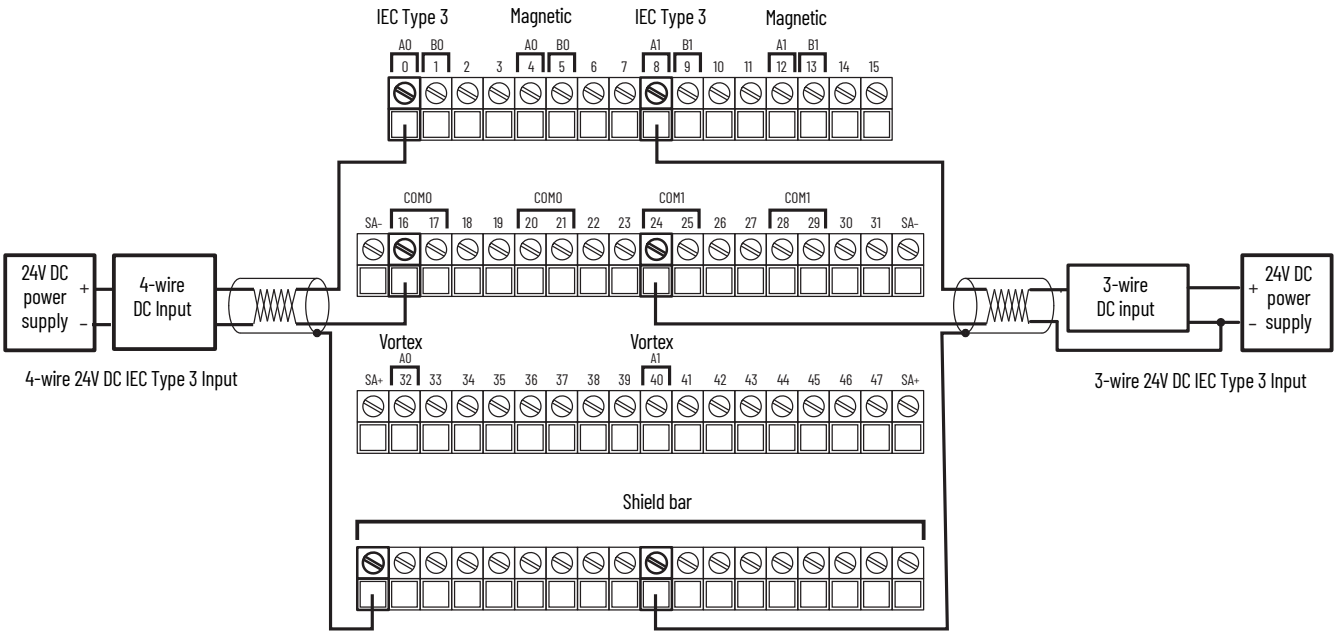

Wiring Connections for 5094-IJ2I and 5094-IJ2IXT

Types of Inputs	Channel 0 Terminals		Channel 1 Terminals		VDC Common	+VDC Power	Shield (Ground)
	Input	COM	Input	COM			
A (Frequency Input)					SA-	SA+	The shield bar accessory is available separately.
24V DC IEC Type 3	0	16, 17, 20, 21	8	24, 25, 28, 29			
Magnetic Pickup	4	16, 17, 20, 21	12	24, 25, 28, 29			
Vortex Flowmeter	32	16, 17, 20, 21	40	24, 25, 28, 29			
B (Gate Input)							
24V DC IEC Type 3	1	16, 17, 20, 21	9	24, 25, 28, 29			
Magnetic Pickup	5	16, 17, 20, 21	13	24, 25, 28, 29			

This figure shows a functional block diagram for the 5094-IJ2I and 5094-IJ2IXT modules.

5094-IJ2I and 5094-IJ2IXT Functional Block Diagram

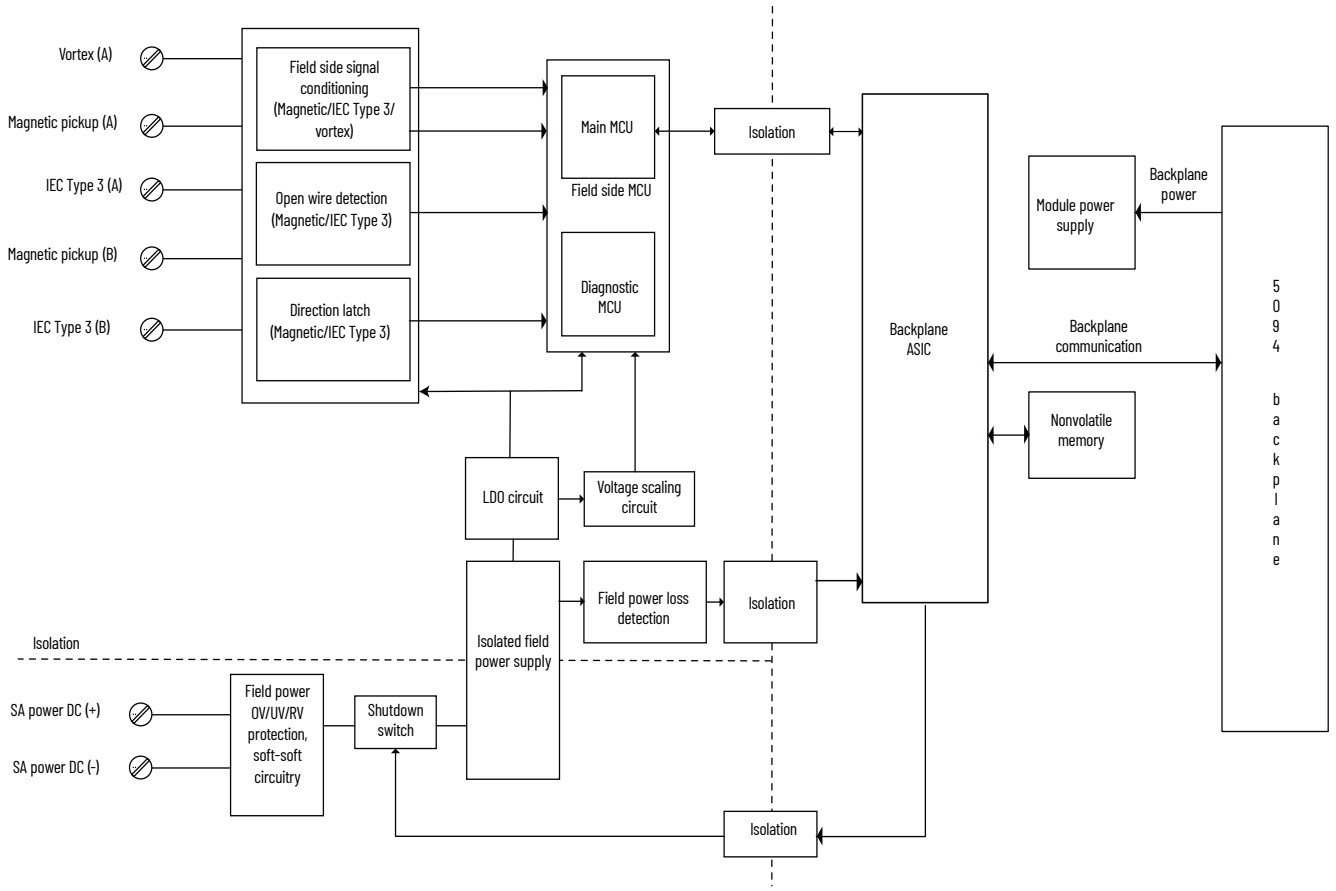

Technical Specifications – 5094-IJ2I, 5094-IJ2IXT

Attribute	5094-IJ2I, 5094-IJ2IXT
Number of input channels	2 Isolated frequency inputs
Number of inputs per channel	2 – A (Frequency) and B (Gate) **Note:** B (Gate) is used to establish direction
Direction	Forward, Reverse
On-state voltage, min	11V DC for 24V IEC Type 3 Input
On-state voltage, nom	24V DC for 24V IEC Type 3 Input
On-state voltage, max	32V DC for 24V IEC Type 3 Input 28.8V AC Peak for Magnetic Pickup 32V DC for Vortex Flowmeter
On-state current, min	2.5 mA for 24V IEC Type 3 Input
On-state current, nom	5.5 mA for 24V IEC Type 3 Input
On-state current, max	8 mA for 24V IEC Type 3 Input
Off-state voltage, max	5.0V DC for 24V DC IEC Type 3 Input
Off-state current, max	1.5 mA for 24V DC IEC Type 3 Input
Wire-off detection	For IEC Type 3 Input and Magnetic Input
On-state threshold voltage, nom (selected by terminal base DC/AC connections and user configuration software / profile)	50 mV, 75 mV, 100 mV, 150 mV, 250 mV, and 500 mV - Magnetic Pickup 3V – Vortex Flowmeter 6V – Vortex Flowmeter 11V DC - 24V DC IEC Type 3 Input
Input frequency, max	50 kHz sine wave for Magnetic Pickup 50 kHz Square wave input for 24V IEC Type 3 input and Vortex Flowmeter
Input frequency, min	1 Hz (IEC Type 3, Vortex Flowmeter) 50 Hz (Magnetic Pickup) typical
Input filtering	Selectable, Time Constant in ms, first order lag
Resolution	Resolution: better than 0.01 Hz

Technical Specifications – 5094-IJ2I, 5094-IJ2IXT (Continued)

Attribute	5094-IJ2I, 5094-IJ2IXT
Frequency input impedance	> 5 kΩ for Magnetic Pickup > 10 kΩ for Vortex Flowmeter > 2.5 kΩ for 24V DC IEC Type 3 Input
Gate input impedance	> 5 kΩ for Magnetic Pickup > 2.5 kΩ for 24V DC IEC Type 3 Input
Minimum RPI	0.2 ms
Open wire detection diagnostics	Yes, IEC Type 3 Input and Magnetic Pickup; User configurable
Module over-temperature detection	No
Overvoltage protection, max	±32V DC
SA supply reverse voltage protection	Yes
SA supply overvoltage protection, max	60V
CIP Sync	Yes

General Specifications – 5094-IJ2I, 5094-IJ2IXT

Attribute	5094-IJ2I, 5094-IJ2IXT
Backplane Power (BP) voltage	15V DC
Backplane Power (BP) current, max	50 mA
Sensor Actuator Power (SA) voltage range	18...32V DC
Sensor Actuator Power (SA) current, max	65 mA
Power dissipation, max	3 W
Thermal dissipation, max	10.23 BTU/hr
Isolation voltage	250V (continuous), Basic Insulation between channels 250V (continuous), Basic Insulation between system and field 250V (continuous), Basic Insulation between SA power and Inputs
Module keying	Mechanical keying or electronic keying via programming software
Indicators	1 green/red module status indicator 1 green/red SA power status indicator 2 yellow/red I/O status indicator for each channel – A (Frequency) and B (Gate)
Terminal base (TB) assembly	**IMPORTANT:** Mounting bases (MBs) and removable terminal bases (RTBs) do not ship with the FLEX 5000 I/O modules. You must purchase a MB and a RTB individually for each I/O module. 5094-MB plus 5094-RTB3I (referred to in documentation as a non-orderable 5094-TB3I) 5094-MB plus 5094-RTB3IS (referred to in documentation as a non-orderable 5094-TB3IS) 5094-MBXT plus 5094-RTB3IXT (referred to in documentation as a non-orderable 5094-TB3IXT) 5094-MBXT plus 5094-RTB3ISXT (referred to in documentation as a non-orderable 5094-TB3ISXT)
TB keying	**5 4**
Wire category(1)	2 - signal ports 2 - power ports
Wire size - signal	0.34...2.5 mm^2 (22...14 AWG) solid or stranded copper wire that is rated at 105 °C (221 °F), or greater, 1.2 mm (3/64 in.) insulation, max Ferrule according to DIN 46 228/1.
Wire size - power	2.5 mm^2 (14 AWG) Cu multi-strand
Dimensions (HxWxD), approx	87.0 x 94.0 x 54.0 mm (3.43 x 3.7 x 2.13 in.)
Weight, approx	120 g (0.26 lb)
Enclosure type	None (open-style)
North American temp code	T4
UKEX/ATEX temp code	T4
IECEx temp code	T4

(1) Use this Conductor Category information for planning conductor routing. See the Industrial Automation Wiring and Grounding Guidelines, publication 1770-4.1.
Use this Conductor Category information for planning conductor routing as described in the appropriate System Level Installation Manual.

Safety Digital I/O Modules

I/O Type	Catalog Number	Description	Page
Safety digital input	5094-IB16S, 5094-IB16SXT	Safety digital 16-point sinking input modules	71
Safety digital output	5094-OB16S, 5094-OB16SXT	Safety digital 16-point sourcing output modules	75
Safety digital relay output	5094-OW4IS, 5094-OW4ISXT	Safety digital 4-point isolated relay output modules	79

5094-IB16S and 5094-IB16SXT Safety Digital 16-point Sinking Input Modules

This figure shows a wiring diagram for the 5094-IB16S and 5094-IB16SXT safety modules. You must connect a 24V DC power source to the left SA+/– terminals to provide field-side power.

5094-IB16S and 5094-IB16SXT Wiring Diagram

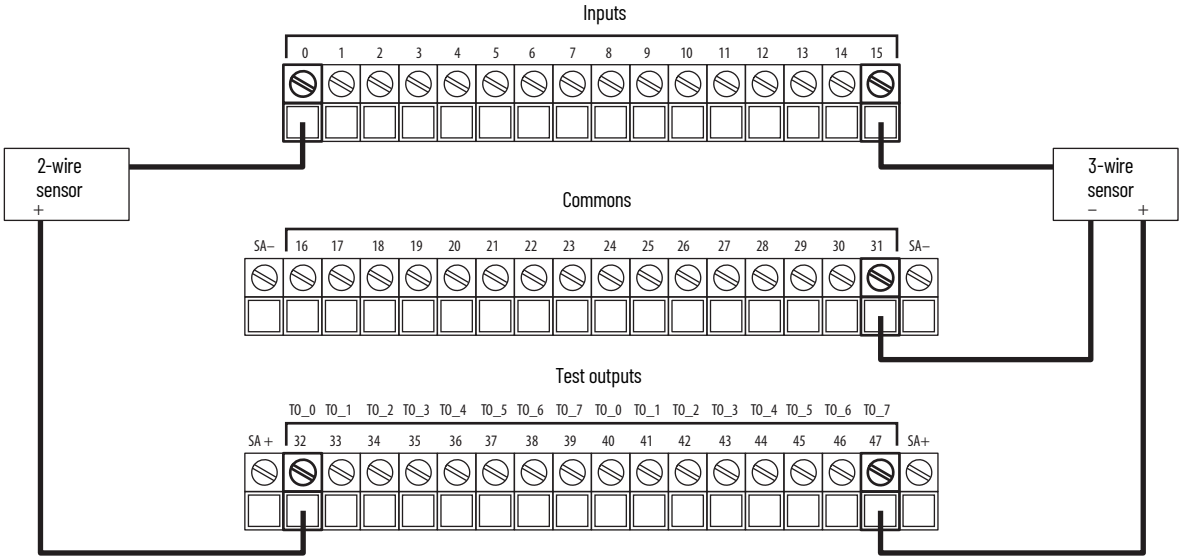

IMPORTANT: The 5094-IB16S module inputs use a shared common. The inputs have a return through internal module circuitry to the SA (–) terminal on the terminal base.

This figure shows a functional block diagram for the 5094-IB16S and 5094-IB16SXT safety modules.

5094-IB16S and 5094-IB16SXT Functional Block Diagram

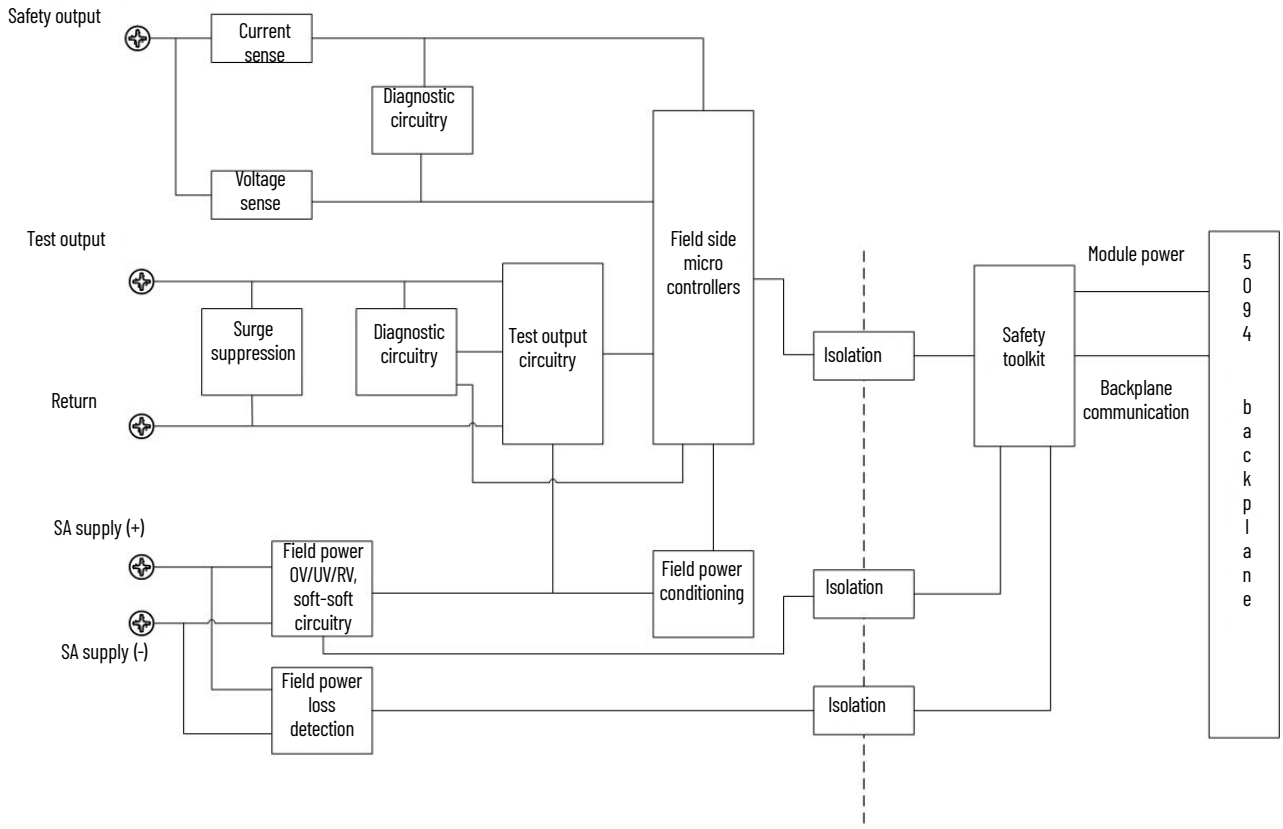

Technical Specifications - 5094-IB16S, 5094-IB16SXT

Attribute	5094-IB16S, 5094-IB16SXT
On-state voltage range	10...32V DC
On-state current, @ on-state min voltage	2.4 mA @ 10V
On-state current, @ on-state nom voltage	2.5 mA @ 24V
On-state current, @ on-state max voltage	2.8 mA @ 32V
Off-state voltage, max	5V DC
Off-state current, max	1.5 mA
Input delay time (screw to backplane), max Off to On On to Off	6 ms @ RPI of 2 ms
Safety Integrity Level	Up to and including Cat. 4 / PLe acc. to EN ISO 13849-1, SIL CL 3 acc. to EN 62061, SIL 3 acc. to IEC 61508. (1)
Safety Reaction Time (SRT)	6 ms @ RPI of 2 ms
Test output current per point	0.2 A
Number of test outputs	8
Test output pulse width, max	600 µs
Test output pulse period, typical	100 ms
Test output max field capacitance	100 nF
Test output short circuit protection	Yes
Test output leakage current, max	0.5 mA
Module over-temperature detection	Yes
Input delay time Off to On, user-selectable filter time On to Off, user-selectable filter time	 0...50 ms 0...50 ms
SA supply reverse voltage protection	Yes
SA supply overvoltage protection, max	60V
Timestamp of inputs	No
CIP Sync	Yes

(1) See the FLEX 5000 Standard and Safety I/O Modules User Manual, publication 5094-UM001, for Safety Application Suitability Levels and Safety Data for Safety I/O Modules.

General Specifications - 5094-IB16S, 5094-IB16SXT

Attribute	5094-IB16S, 5094-IB16SXT
Inputs	16 channels (1 group of 16), sinking
Backplane Power (BP) voltage	15V DC
Backplane Power (BP) current, max	100 mA
Sensor Actuator Power (SA) voltage range	18...32V DC
Sensor Actuator Power (SA) current, max	1.8 A
Power dissipation, max	3.5 W
Thermal dissipation, max	11.94 BTU/hr
Isolation voltage	250V (continuous), Basic Insulation Type, System to Field No isolation between SA power and input ports No isolation between individual input ports
Module keying	Mechanical keying or electronic keying via programming software.
Indicators	1 green/red module status indicator 1 green/red SA power status indicator 16 yellow/red I/O status indicators
Terminal base (TB) assembly	**IMPORTANT:** Mounting bases (MBs) and removable terminal bases (RTBs) do not ship with the FLEX 5000 I/O modules. You must purchase a MB and a RTB individually for each I/O module. 5094-MB plus 5094-RTB3I (referred to in documentation as a non-orderable 5094-TB3I) 5094-MB plus 5094-RTB3IS (referred to in documentation as a non-orderable 5094-TB3IS) 5094-MBXT plus 5094-RTB3IXT (referred to in documentation as a non-orderable 5094-TB3IXT) 5094-MBXT plus 5094-RTB3ISXT (referred to in documentation as a non-orderable 5094-TB3ISXT)
TB keying	5 ⚠⚠ 5
Wire category(1)	2 - signal ports 2 - power ports
Wire size - signal	0.34...2.5 mm^2 (22...14 AWG) solid or stranded copper wire that is rated at 105 °C (221 °F), or greater, 1.2 mm (3/64 in.) insulation, max Ferrule according to DIN 46 228/1
Wire size - power	2.5 mm^2 (14 AWG) Cu multi-strand
Dimensions (HxWxD), approx	87.0 x 94.0 x 54.0 mm (3.43 x 3.70 x 2.13 in.)
Weight, approx	136 g (0.30 lb)
Enclosure type	None (open-style)
North American temp code	T4
UKEX/ATEX temp code	T4
IECEx temp code	T4

(1) Use this Conductor Category information for planning conductor routing. See the Industrial Automation Wiring and Grounding Guidelines, publication 1770-4.1.
Use this Conductor Category information for planning conductor routing as described in the appropriate System Level Installation Manual.

Environmental Specifications - 5094-IB16S, 5094-IB16SXT

Attribute	5094-IB16S, 5094-IB16SXT
Temperature, operating IEC 60068-2-1 (Test Ad, Operating Cold), IEC 60068-2-2 (Test Bd, Operating Dry Heat), IEC 60068-2-14 (Test Nb, Operating Thermal Shock)	-40 °C ≤ Ta ≤ +70 °C (-40 °F ≤ Ta ≤ +158 °F)
Temperature, surrounding air, max	70 °C (158 °F)
Temperature, nonoperating IEC 60068-2-1 (Test Ab, Unpackaged Nonoperating Cold), IEC 60068-2-2 (Test Bb, Unpackaged Nonoperating Dry Heat), IEC 60068-2-14 (Test Na, Unpackaged Nonoperating Thermal Shock)	-40...+85 °C (-40...+185 °F)
Relative humidity IEC 60068-2-30 (Test Db, Unpackaged Damp Heat)	5...95% noncondensing
Vibration IEC 60068-2-6 (Test Fc, Operating)	5 g @ 10...500 Hz
Shock, operating IEC 60068-2-27 (Test Ea, Unpackaged Shock)	30 g
Shock, nonoperating IEC 60068-2-27 (Test Ea, Unpackaged Shock)	30 g
Emissions	IEC 61000-6-4
ESD immunity IEC 61000-4-2	6 kV contact discharges 8 kV air discharges
Radiated RF immunity IEC 61000-4-3	10V/m with 1 kHz sine wave 80% AM from 80...2000 MHz 10V/m with 200 Hz 50% pulse 100% AM @ 900 MHz 10V/m with 200 Hz 50% pulse 100% AM @ 1890 MHz 10V/m with 1 kHz sine wave 80% AM from 2000...2700 MHz 3V/m with 1 kHz sine wave 80% AM from 2000...6000 MHz

Environmental Specifications - 5094-IB16S, 5094-IB16SXT (Continued)

Attribute	5094-IB16S, 5094-IB16SXT
EFT/B immunity IEC 61000-4-4	±4 kV @ 5 kHz on signal ports
Surge transient immunity IEC 61000-4-5	±1 kV line-line (DM) and ±2 kV line-earth (CM) on signal ports
Conducted RF immunity IEC 61000-4-6	10V rms with 1 kHz sine wave 80% AM from 150 kHz...80 MHz
Corrosion resistance classification	**5094-IB16S** – ISA S71.04 G2 **5094-IB16SXT** – ISA S71.04 G3

Certifications - 5094-IB16S, 5094-IB16SXT

Certification[1]	5094-IB16S, 5094-IB16SXT
c-UL-us	UL Listed Industrial Control Equipment, certified for US and Canada. See UL File E322657. UL Listed for Class I, Division 2 Group A,B,C,D Hazardous Locations, certified for U.S. and Canada. See UL File E334470.
CE	European Union 2014/30/EU EMC Directive, compliant with: EN 61326-1; Meas./Control/Lab., Industrial Requirements EN 61000-6-2; Industrial Immunity EN 61000-6-4; Industrial Emissions EN 61131-2; Programmable Controllers (Clause 8, Zone A & B) European Union 2006/42/EC MD, compliant with: EN ISO 13849-1; Safety-related parts of control system EN 62061; Functional safety of safety-related control systems European Union 2011/65/EU RoHS, compliant with: EN 63000; Technical documentation
RCM	Australian Radiocommunications Act, compliant with: EN 61000-6-4; Industrial Emissions
Ex	UK Statutory Instrument 2016 No. 1107 and European Union 2014/34/EU ATEX Directive, compliant with: EN IEC 60079-0; General Requirements EN IEC 60079-7; Explosive Atmospheres, Protection "e" II 3 G Ex ec IIC T4 Gc DEMKO 17 ATEX 1922X UL21UKEX2275X
IECEx	IECEx System, compliant with: IEC 60079-0; General Requirements IEC 60079-7; Explosive Atmospheres, Protection "e" Ex ec IIC T4 Gc IECEx UL 17.0075X
TÜV	TÜV Certified for Functional Safety: Up to and including Cat. 4 / PLe acc. to EN ISO 13849-1, SIL CL 3 acc. to EN 62061, SIL 3 acc. to IEC 61508[2]
KC	Korean Registration of Broadcasting and Communications Equipment, compliant with: Article 58-2 of Radio Waves Act, Clause 3
Morocco	Arrêté ministériel n° 6404-15 du 1 er muharram 1437 Arrêté ministériel n° 6404-15 du 29 ramadan 1436
EAC	Russian Customs Union TR CU 020/2011 EMC Technical Regulation Russian Customs Union TR CU 004/2011 LV Technical Regulation
CCC	CNCA-C23-01 强制性产品认证实施规则 防爆电气 CNCA-C23-01 CCC Implementation Rule Explosion-Proof Electrical Products
UKCA	2016 No. 1091 – Electromagnetic Compatibility Regulations 2016 No. 1101 – Electrical Equipment (Safety) Regulations 2016 No. 1107 – Equipment and Protective Systems Intended for Use in Potentially Explosive Atmospheres Regulations 2012 No. 3032 – Restriction of the Use of Certain Hazardous Substances in Electrical and Electronic Equipment Regulations

(1) When marked. See the Product Certifications website at rok.auto/certifications for declarations of conformity, certificates, and other certification details.
(2) When used as described in the GuardLogix® 5580 and Compact GuardLogix 5380 Controller Systems Reference Manual, publication 1756-RM012, and the FLEX 5000 Standard and Safety I/O Modules User Manual, publication 5094-UM001, for Safety Application Suitability Levels and Safety Data for Safety I/O Modules.

5094-OB16S and 5094-OB16SXT Safety Digital 16-point Sourcing Output Modules

This figure shows a wiring diagram for the 5094-OB16S and 5094-OB16SXT safety modules. You must connect a 24V DC power source to the left SA+/– terminals to provide field-side power.

5094-OB16S and 5094-OB16SXT Wiring Diagram

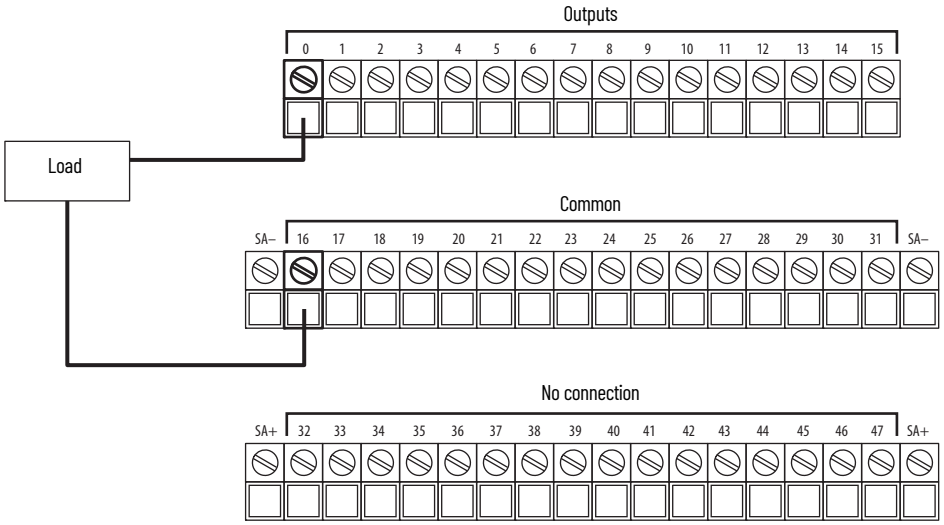

This figure shows a functional block diagram for the 5094-OB16S and 5094-OB16SXT safety modules.

5094-OB16S and 5094-OB16SXT Functional Block Diagram

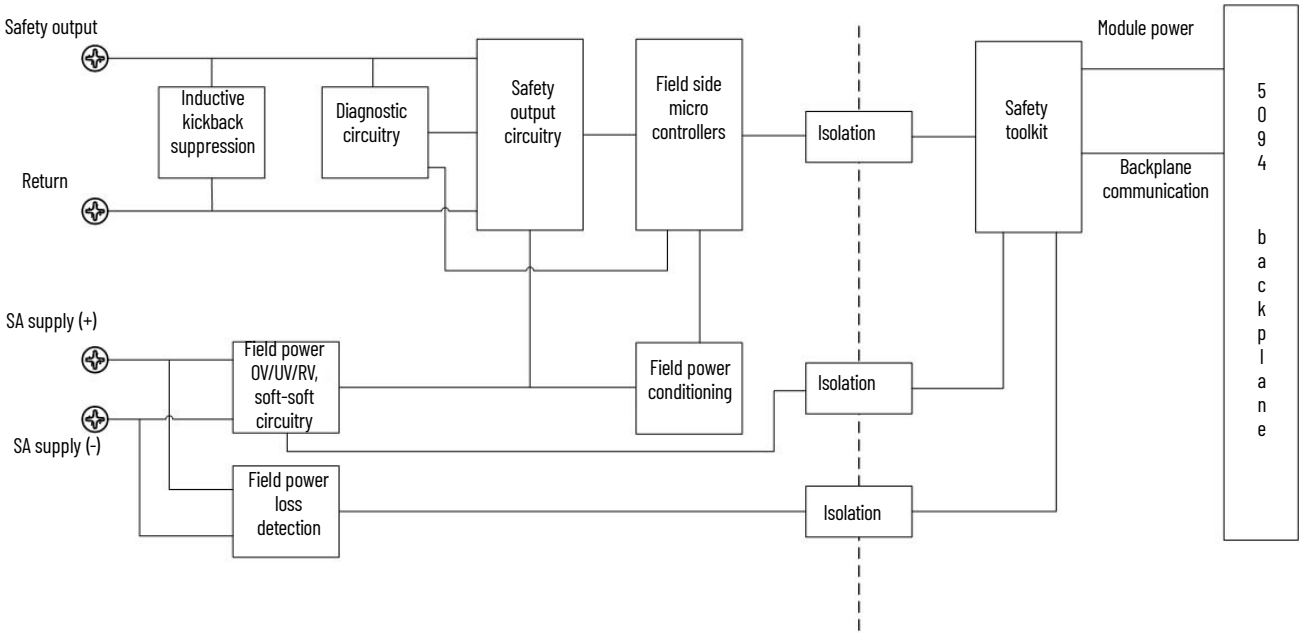

Technical Specifications - 5094-OB16S, 5094-OB16SXT

Attribute	5094-OB16S, 5094-OB16SXT
On-state voltage range	18...32V DC
On-state voltage drop, max	0.5V @ 0.5 A
On-state current per channel, min	10 mA
Off-state voltage, max	5V DC
Off-state leakage current per point, max(1)	0.5 mA
Output current rating per point	0.5 A
Surge current per point, max	1.8 A(2)

Technical Specifications - 5094-OB16S, 5094-OB16SXT (Continued)

Attribute	5094-OB16S, 5094-OB16SXT
Output delay time (backplane to screw), max Off to On On to Off	4 ms @ RPI of 2 ms
Safety Integrity Level (SIL)	Up to and including Cat. 4 / PLe acc. to EN ISO 13849-1, SIL CL 3 acc. to EN 62061, SIL 3 acc. to IEC 61508(3)
Safety Reaction Time (SRT)	4.5 ms @ RPI of 2 ms
Pulse width, max	500 µs
Open load detection diagnostics	Yes (per point)
Output short circuit/overload detection	Yes (per point)
Channel-to-channel short-circuit detection	Yes (per point) in Safety Pulse Test mode
Module over-temperature detection	Yes
Output short circuit/overload protection	Yes (per point)
SA supply reverse voltage protection	Yes
SA supply overvoltage protection, max	60V
Output control in fault state per point	Yes
Output state in program mode per point	Off (default) Hold ON
Output state in communications fault mode per point	Off (default) Hold ON
Output state in communications fault mode in program mode per point	Program mode (default) Communications Fault mode
CIP Sync	Yes

(1) Recommended Loading Resistor - To limit the effects of leakage current through solid-state outputs, you can connect a loading resistor in parallel with your load. For 24V DC operation, use a 5.6 kΩ, 0.5 W resistor for transistor operation.
(2) 1.8 A for up to 150 ms. The module current rating cannot exceed 10 A at any time. See the FLEX 5000 Standard and Safety I/O Modules User Manual, publication 5094-UM001, for Surge Capability of Safety Output.
(3) See the FLEX 5000 Standard and Safety I/O Modules User Manual, publication 5094-UM001, for Safety Application Suitability Levels and Safety Data for Safety I/O Modules.

General Specifications - 5094-OB16S, 5094-OB16SXT

Attribute	5094-OB16S, 5094-OB16SXT
Outputs	16 Channels (1 group of 16), sourcing
Output voltage range	18...32V DC
Backplane Power (BP) voltage	15V DC
Backplane Power (BP) current, max	100 mA
Sensor Actuator Power (SA) voltage range	18...32V DC
Sensor Actuator Power (SA) current, max	8.2 A
Power dissipation, max	3.5 W
Thermal dissipation, max	11.94 BTU/hr
Isolation voltage	250V (continuous), Basic Insulation Type, System to Field No isolation between SA power and output ports No isolation between individual output ports
Module keying	Mechanical keying or electronic keying via programming software.
Indicators	1 green/red module status indicator 1 green/red SA power status indicator 16 yellow/red I/O status indicators
Terminal base (TB) assembly	**IMPORTANT:** Mounting bases (MBs) and removable terminal bases (RTBs) do not ship with the FLEX 5000 I/O modules. You must purchase a MB and a RTB individually for each I/O module. 5094-MB plus 5094-RTB3I (referred to in documentation as a non-orderable 5094-TB3I) 5094-MB plus 5094-RTB3IS (referred to in documentation as a non-orderable 5094-TB3IS) 5094-MBXT plus 5094-RTB3IXT (referred to in documentation as a non-orderable 5094-TB3IXT) 5094-MBXT plus 5094-RTB3ISXT (referred to in documentation as a non-orderable 5094-TB3ISXT)
TB keying	5 Ⓐ Ⓣ 1
Wire category(1)	2 - signal ports 2 - power ports
Wire size - signal	0.34...2.5 mm^2 (22...14 AWG) solid or stranded copper wire that is rated at 105 °C (221 °F), or greater, 1.2 mm (3/64 in.) insulation, max Ferrule according to DIN 46 228/1
Wire size - power	2.5 mm^2 (14 AWG) Cu multi-strand
Dimensions (HxWxD), approx	87.0 x 94.0 x 54.0 mm (3.43 x 3.70 x 2.13 in.)
Weight, approx	140 g (0.31 lb)
Enclosure type	None (open-style)

General Specifications - 5094-OB16S, 5094-OB16SXT (Continued)

Attribute	5094-OB16S, 5094-OB16SXT
North American temp code	T4
UKEX/ATEX temp code	T4
IECEx temp code	T4

(1) Use this Conductor Category information for planning conductor routing. See the Industrial Automation Wiring and Grounding Guidelines, publication 1770-4.1.
Use this Conductor Category information for planning conductor routing as described in the appropriate System Level Installation Manual.

Environmental Specifications - 5094-OB16S, 5094-OB16SXT

Attribute	5094-OB16S, 5094-OB16SXT
Temperature, operating IEC 60068-2-1 (Test Ab, Operating Cold), IEC 60068-2-2 (TestBb, Unpackaged Nonoperating Dry Heat), IEC 60068-2-14 (Test Na, Operating Thermal Shock)	-40 °C ≤ Ta ≤ +70 °C (-40 °F ≤ Ta ≤ +158 °F)
Temperature, surrounding air, max	70 °C (158 °F)
Temperature, nonoperating IEC 60068-2-1 (Test Ab, Unpackaged Nonoperating Cold), IEC 60068-2-2 (Test Bb, Unpackaged Nonoperating Dry Heat), IEC 60068-2-14 (Test Na, Unpackaged Nonoperating Thermal Shock)	-40...+85 °C (-40...+185 °F)
Relative humidity IEC 60068-2-30 (Test Db, Unpackaged Damp Heat)	5...95% noncondensing
Vibration IEC 60068-2-6 (Test Fc, Operating)	5 g @ 10...500 Hz
Shock, operating IEC 60068-2-27 (Test Ea, Unpackaged Shock)	30 g
Shock, nonoperating IEC 60068-2-27 (Test Ea, Unpackaged Shock)	30 g
Emissions	IEC 61000-6-4
ESD immunity IEC 61000-4-2	6 kV contact discharges 8 kV air discharges
Radiated RF immunity IEC 61000-4-3	10V/m with 1 kHz sine wave 80% AM from 80...2000 MHz 10V/m with 200 Hz 50% pulse 100% AM @ 900 MHz 10V/m with 200 Hz 50% pulse 100% AM @ 1890 MHz 10V/m with 1 kHz sine wave 80% AM from 2000...2700 MHz 3V/m with 1 kHz sine wave 80% AM from 2000...6000 MHz
EFT/B immunity IEC 61000-4-4	±4 kV @ 5 kHz on signal ports
Surge transient immunity IEC 61000-4-5	±1 kV line-line (DM) and ±2 kV line-earth (CM) on signal ports
Conducted RF immunity IEC 61000-4-6	10V rms with 1 kHz sine wave 80% AM from 150 kHz...80 MHz
Corrosion resistance classification	**5094-OB16S** – ISA S71.04 G2 **5094-OB16SXT** – ISA S71.04 G3

Certifications - 5094-OB16S, 5094-OB16SXT

Certification(1)	5094-OB16S, 5094-OB16SXT
c-UL-us	UL Listed Industrial Control Equipment, certified for US and Canada. See UL File E322657. UL Listed for Class I, Division 2 Group A,B,C,D Hazardous Locations, certified for U.S. and Canada. See UL File E334470.
CE	European Union 2014/30/EU EMC Directive, compliant with: EN 61326-1; Meas./Control/Lab., Industrial Requirements EN 61000-6-2; Industrial Immunity EN 61000-6-4; Industrial Emissions EN 61131-2; Programmable Controllers (Clause 8, Zone A & B) European Union 2006/42/EC MD, compliant with: EN ISO 13849-1; Safety-related parts of control system EN 62061; Functional safety of safety-related control systems European Union 2011/65/EU RoHS, compliant with: EN 63000; Technical documentation
RCM	Australian Radiocommunications Act, compliant with: EN 61000-6-4; Industrial Emissions
Ex	UK Statutory Instrument2016 No. 1107 and European Union 2014/34/EU ATEX Directive, compliant with: EN IEC 60079-0; General Requirements EN IEC 60079-7; Explosive Atmospheres, Protection "e" II 3 G Ex ec IIC T4 Gc DEMKO 17 ATEX 1922X UL21UKEX2275X

Certifications - 5094-OB16S, 5094-OB16SXT (Continued)

Certification[1]	5094-OB16S, 5094-OB16SXT
IECEx	IECEx System, compliant with: IEC 60079-0; General Requirements IEC 60079-7; Explosive Atmospheres, Protection "e" Ex ec IIC T4 Gc IECEx UL 17.0075X
TÜV	TÜV Certified for Functional Safety: Up to and including Cat. 4 / PLe acc. to EN ISO 13849-1, SIL CL 3 acc. to EN 62061, SIL 3 acc. to IEC 61508[2]
KC	Korean Registration of Broadcasting and Communications Equipment, compliant with: Article 58-2 of Radio Waves Act, Clause 3
Morocco	Arrêté ministériel n° 6404-15 du 1 er muharram 1437 Arrêté ministériel n° 6404-15 du 29 ramadan 1436
EAC	Russian Customs Union TR CU 020/2011 EMC Technical Regulation Russian Customs Union TR CU 004/2011 LV Technical Regulation
CCC	CNCA-C23-01 强制性产品认证实施规则 防爆电气 CNCA-C23-01 CCC Implementation Rule Explosion-Proof Electrical Products
UKCA	2016 No. 1091 – Electromagnetic Compatibility Regulations 2016 No. 1101 – Electrical Equipment (Safety) Regulations 2016 No. 1107 – Equipment and Protective Systems Intended for Use in Potentially Explosive Atmospheres Regulations 2012 No. 3032 – Restriction of the Use of Certain Hazardous Substances in Electrical and Electronic Equipment Regulations

(1) When marked. See the Product Certifications website at rok.auto/certifications for declarations of conformity, certificates, and other certification details.
(2) When used as described in the GuardLogix 5580 and Compact GuardLogix 5380 Controller Systems Reference Manual, publication 1756-RM012, and the FLEX 5000 Standard and Safety I/O Module User Manual, publication 5094-UM001, for Safety Application Suitability Levels and Safety Data for Safety I/O Modules.

5094-OW4IS and 5094-OW4ISXT Safety Digital 4-point Isolated Relay Output Modules

This figure shows a wiring diagram for the 5094-OW4IS and 5094-OW4ISXT safety modules. You must connect a 24V DC power source to the left SA+/– terminals to provide field-side power.

5094-OW4IS and 5094-OW4ISXT Wiring Diagram

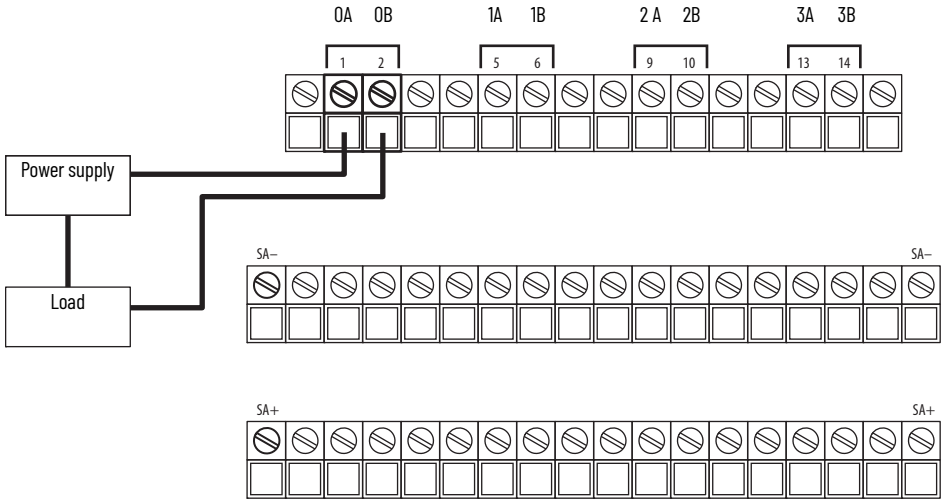

This figure shows a functional block diagram for the 5094-OW4IS and 5094-OW4ISXT safety modules.

5094-OW4IS and 5094-OW4ISXT Functional Block Diagram

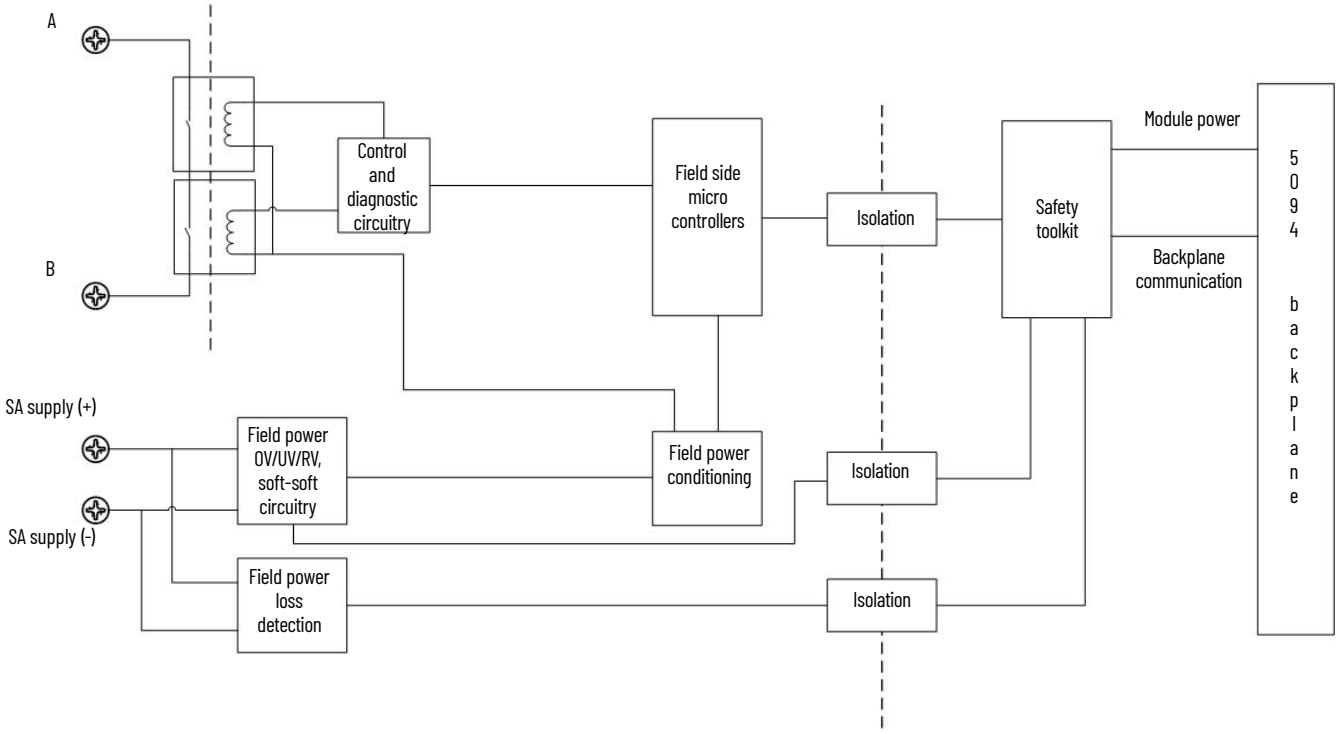

Technical Specifications - 5094-OW4IS, 5094-OW4ISXT

Attribute	5094-OW4IS, 5094-OW4ISXT
Off-state leakage	0 mA (no onboard snubbers)
Output ratings (OUT), max[1]	5...30V DC, 2A/channel 5...30V DC, 4A/channel (channel 0 & 1 only, 2 & 3 unused) 125/240V AC, 50/60 Hz, 2A/channel
Output delay time, max Off to On On to Off	 20 ms 10 ms[2]
Safety Integrity Level	Up to and including Cat. 4 / PLe acc. to EN ISO 13849-1, SIL CL 3 acc. to EN 62061, SIL 3 acc. to IEC 61508.[3]
Safety Reaction Time (SRT)	20 ms
Initial contact resistance, max	200 mΩ
Bounce time, mean	1 ms
Output control in fault state per point	Yes
Output state in program mode per point	Off (default) Hold ON
Output state in communications fault mode per point	Off (default) Hold ON
Output state in communications fault mode in program mode per point	Program mode (default) Communications Fault mode
Fusing	Not supported
Load current, min	1 mA
Expected contact life	100K cycles @ 2 A resistive load 50K cycles @ 4 A resistive load
Pilot duty rating	5...240V AC, 50/60 Hz, C300 pilot duty per channel 5...125V DC, R150 pilot duty per channel

(1) **Surge Suppression** - Connecting surge suppressors across your external inductive load extends the life of the module. For additional details, see the Industrial Automation Wiring and Grounding Guidelines, publication 1770-4.1.
(2) Under no fault condition.
(3) See the FLEX 5000 Standard and Safety I/O Modules User Manual, publication 5094-UM001, for Safety Application Suitability Levels and Safety Data for Safety I/O Modules.

General Specifications - 5094-OW4IS, 5094-OW4ISXT

Attribute	5094-OW4IS, 5094-OW4ISXT
Outputs	4 - Form A (normally open)
Output voltage range	5...125V DC 5...240V AC
Backplane Power (BP) voltage	15V DC
Backplane Power (BP) current, max	100 mA
Sensor Actuator Power (SA) voltage range	18...32V DC
Sensor Actuator Power (SA) current, max	125 mA
Power dissipation, max	3.5 W
Thermal dissipation, max	11.94 BTU/hr
Isolation voltage	250V (continuous), Basic Insulation Type, System to SA 250V (continuous), Reinforced Insulation Type, System to Channel 250V (continuous), Reinforced Insulation Type, SA to Channel 250V (continuous), Reinforced Insulation Type, Channel to Channel
Module keying	Mechanical keying or electronic keying via programming software.
Indicators	1 green/red module status indicator 1 green/red SA power status indicator 4 yellow/red I/O status indicators
Terminal base (TB) assembly	**IMPORTANT:** Mounting bases (MBs) and removable terminal bases (RTBs) do not ship with the FLEX 5000 I/O modules. You must purchase a MB and a RTB individually for each I/O module. 5094-MB plus 5094-RTB3W (referred to in documentation as a non-orderable 5094-TB3W) 5094-MB plus 5094-RTB3WS (referred to in documentation as a non-orderable 5094-TB3WS) 5094-MBXT plus 5094-RTB3WXT (referred to in documentation as a non-orderable 5094-TB3WXT) 5094-MBXT plus 5094-RTB3WSXT (referred to in documentation as a non-orderable 5094-TB3WSXT)
TB keying	2 ⊘⊘ 3
Wire category[1]	1 - signal ports 2 - power ports
Wire size - signal	0.34...2.5 mm^2 (22...14 AWG) solid or stranded copper wire that is rated at 105 °C (221 °F), or greater, 1.2 mm (3/64 in.) insulation, max Ferrule according to DIN 46 228/1
Wire size - power	2.5 mm^2 (14 AWG) Cu multi-strand
Dimensions (HxWxD), approx	87.0 x 94.0 x 54.0 mm (3.43 x 3.70 x 2.13 in.)

General Specifications - 5094-OW4IS, 5094-OW4ISXT (Continued)

Attribute	5094-OW4IS, 5094-OW4ISXT
Weight, approx	146 g (0.32 lb)
Enclosure type	None (open-style)
North American temp code	T4
UKEX/ATEX temp code	T4
IECEx temp code	T4

(1) Use this Conductor Category information for planning conductor routing. See the Industrial Automation Wiring and Grounding Guidelines, publication 1770-4.1.
Use this Conductor Category information for planning conductor routing as described in the appropriate System Level Installation Manual.

Environmental Specifications - 5094-OW4IS, 5094-OW4ISXT

Attribute	5094-OW4IS, 5094-OW4ISXT
Temperature, operating IEC 60068-2-1 (Test Ab, Operating Cold), IEC 60068-2-2 (TestBb, Unpackaged Nonoperating Dry Heat), IEC 60068-2-14 (Test Na, Operating Thermal Shock)	-40 °C ≤ Ta ≤ +70 °C (-40 °F ≤ Ta ≤ +158 °F)
Temperature, surrounding air, max	70 °C (158 °F)
Temperature, storage IEC 60068-2-1 (Test Ab, Unpackaged Nonoperating Cold), IEC 60068-2-2 (Test Bb, Unpackaged Nonoperating Dry Heat), IEC 60068-2-14 (Test Na, Unpackaged Nonoperating Thermal Shock)	-40...+85 °C (-40...+185 °F)
Relative humidity IEC 60068-2-30 (Test Db, Unpackaged Damp Heat)	5...95% noncondensing
Vibration IEC 60068-2-6 (Test Fc, Operating)	3 g @ 10...500 Hz
Shock, operating IEC 60068-2-27 (Test Ea, Unpackaged Shock)	12 g
Shock, nonoperating IEC 60068-2-27 (Test Ea, Unpackaged Shock)	30 g
Emissions	IEC 61000-6-4
ESD immunity IEC 61000-4-2	6 kV contact discharges 8 kV air discharges
Radiated RF immunity IEC 61000-4-3	10V/m with 1 kHz sine wave 80% AM from 80...2000 MHz 10V/m with 200 Hz 50% pulse 100% AM @ 900 MHz 10V/m with 200 Hz 50% pulse 100% AM @ 1890 MHz 10V/m with 1 kHz sine wave 80% AM from 2000...2700 MHz 3V/m with 1 kHz sine wave 80% AM from 2000...6000 MHz
EFT/B immunity IEC 61000-4-4	±4 kV @ 5 kHz on signal ports
Surge transient immunity IEC 61000-4-5	±1 kV line-line (DM) and ±2 kV line-earth (CM) on signal ports
Conducted RF immunity IEC 61000-4-6	10V rms with 1 kHz sine wave 80% AM from 150 kHz...80 MHz
Corrosion resistance classification	**5094-OW4IS** – ISA S71.04 G2 **5094-OW4ISXT** – ISA S71.04 G3

Certifications - 5094-OW4IS, 5094-OW4ISXT

Certification(1)	5094-OW4IS, 5094-OW4ISXT
c-UL-us	UL Listed Industrial Control Equipment, certified for US and Canada. See UL File E322657. UL Listed for Class I, Division 2 Group A,B,C,D Hazardous Locations, certified for U.S. and Canada. See UL File E334470.
CE	European Union 2014/30/EU EMC Directive, compliant with: EN 61326-1; Meas./Control/Lab., Industrial Requirements EN 61000-6-2; Industrial Immunity EN 61000-6-4; Industrial Emissions EN 61131-2; Programmable Controllers (Clause 8, Zone A & B) European Union 2006/42/EC MD, compliant with: EN ISO 13849-1; Safety-related parts of control system EN 62061; Functional safety of safety-related control systems European Union 2011/65/EU RoHS, compliant with: EN 63000; Technical documentation
RCM	Australian Radiocommunications Act, compliant with: EN 61000-6-4; Industrial Emissions
Ex	UK Statutory Instrument 2016 No. 1107 and European Union 2014/34/EU ATEX Directive, compliant with: EN IEC 60079-0; General Requirements EN IEC 60079-7; Explosive Atmospheres, Protection "e" II 3 G Ex ec & nC IIC T4 Gc DEMKO 17 ATEX 1922X UL21UKEX2275X

Certifications - 5094-OW4IS, 5094-OW4ISXT (Continued)

Certification[1]	5094-OW4IS, 5094-OW4ISXT
IECEx	IECEx System, compliant with: IEC 60079-0; General Requirements IEC 60079-7; Explosive Atmospheres, Protection "e" IEC 60079-15; Potentially Explosive Atmospheres, Protection "n" Ex ec nC IIC T4 Gc IECEx UL 17.0075X
TÜV	TÜV Certified for Functional Safety: Up to and including Cat. 4 / PLe acc. to EN ISO 13849-1, SIL CL 3 acc. to EN 62061, SIL 3 acc. to IEC 61508[2]
KC	Korean Registration of Broadcasting and Communications Equipment, compliant with: Article 58-2 of Radio Waves Act, Clause 3
Morocco	Arrêté ministériel n° 6404-15 du 1 er muharram 1437 Arrêté ministériel n° 6404-15 du 29 ramadan 1436
EAC	Russian Customs Union TR CU 020/2011 EMC Technical Regulation Russian Customs Union TR CU 004/2011 LV Technical Regulation
CCC	CNCA-C23-01 强制性产品认证实施规则 防爆电气 CNCA-C23-01 CCC Implementation Rule Explosion-Proof Electrical Products
UKCA	2016 No. 1091 – Electromagnetic Compatibility Regulations 2016 No. 1101 – Electrical Equipment (Safety) Regulations 2016 No. 1107 – Equipment and Protective Systems Intended for Use in Potentially Explosive Atmospheres Regulations 2012 No. 3032 – Restriction of the Use of Certain Hazardous Substances in Electrical and Electronic Equipment Regulations

(1) When marked. See the Product Certifications website at rok.auto/certifications for declarations of conformity, certificates, and other certification details.
(2) When used as described in the GuardLogix 5580 and Compact GuardLogix 5380 Controller Systems Reference Manual, publication 1756-RM012, and the FLEX 5000 Standard and Safety I/O Modules User Manual, publication 5094-UM001, for Safety Application Suitability Levels and Safety Data for Safety I/O Modules.

Safety Analog I/O Modules

I/O Type	Catalog Number	Description	Page
Safety analog HART input	5094-IF4IHS, 5094-IF4IHSXT	Safety analog 4-channel isolated HART input modules	83
Safety analog HART output	5094-OF4IHS, 5094-OF4IHSXT	Safety analog 4-channel isolated HART output modules	89
Safety analog thermocouple/RTD input	5094-IRT8S, 5094-IRT8SXT	Safety analog 8-channel thermocouple/RTD input modules	94
Safety frequency input	5094-IJ2IS, 5094-IJ2ISXT	Safety 2-channel frequency input modules	101

5094-IF4IHS and 5094-IF4IHSXT Safety Analog 4-channel Isolated HART Input Modules

These figures show wiring diagrams for the 5094-IF4IHS and 5094-IF4IHSXT safety modules. You must connect a 24V DC power source to the left SA+/– terminals to provide field-side power.

IMPORTANT
- To ensure proper operation and high immunity to electrical noise, always use Belden 8761 (shielded, twisted-pair) or equivalent wire.
- The 5094-STB shield bar is required to wire the shields for the 5094-IF4IHS and 5094-IF4IHSXT modules. Order catalog number 5094-STB-QTY5 (pk of 5).
- All 5094-STB shield-bar screws are bussed together. You must ground the shield bar to functional earth.

5094-IF4IHS and 5094-IF4IHSXT Wiring Diagram — 2-wire Current/HART Transmitter

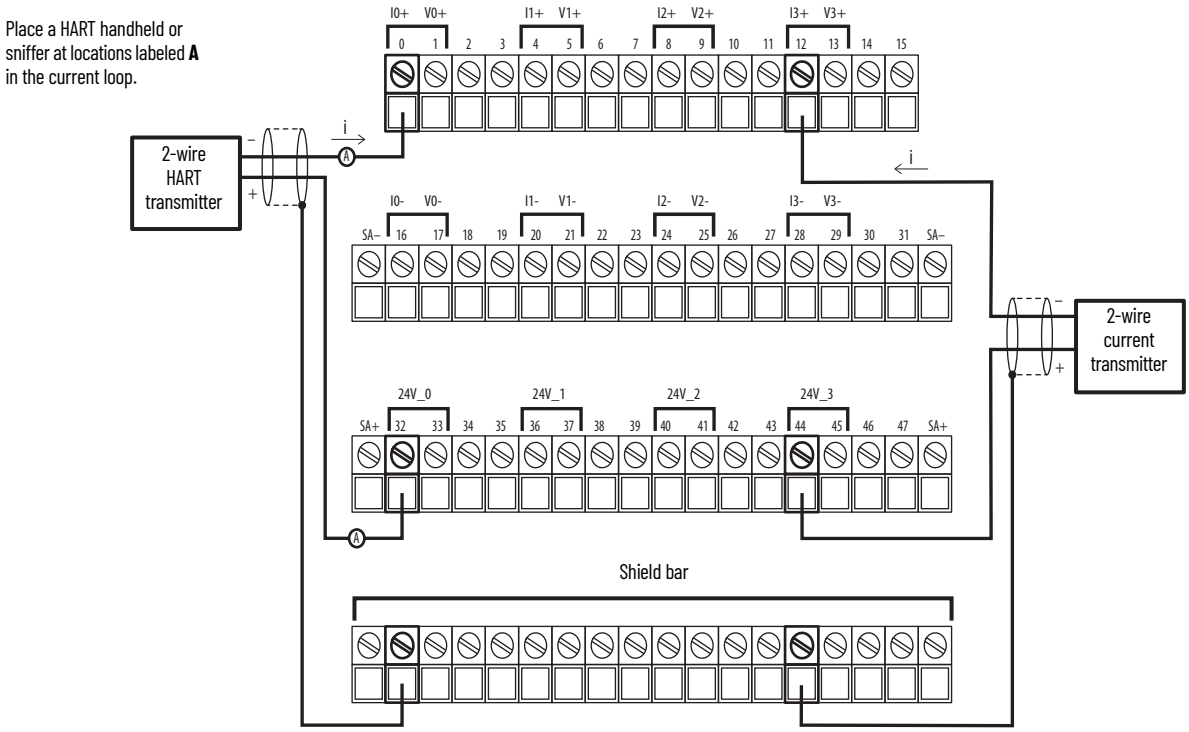

5094-IF4IHS and 5094-IF4IHSXT Wiring Diagram — 3-wire and 4-wire Current/HART Transmitter

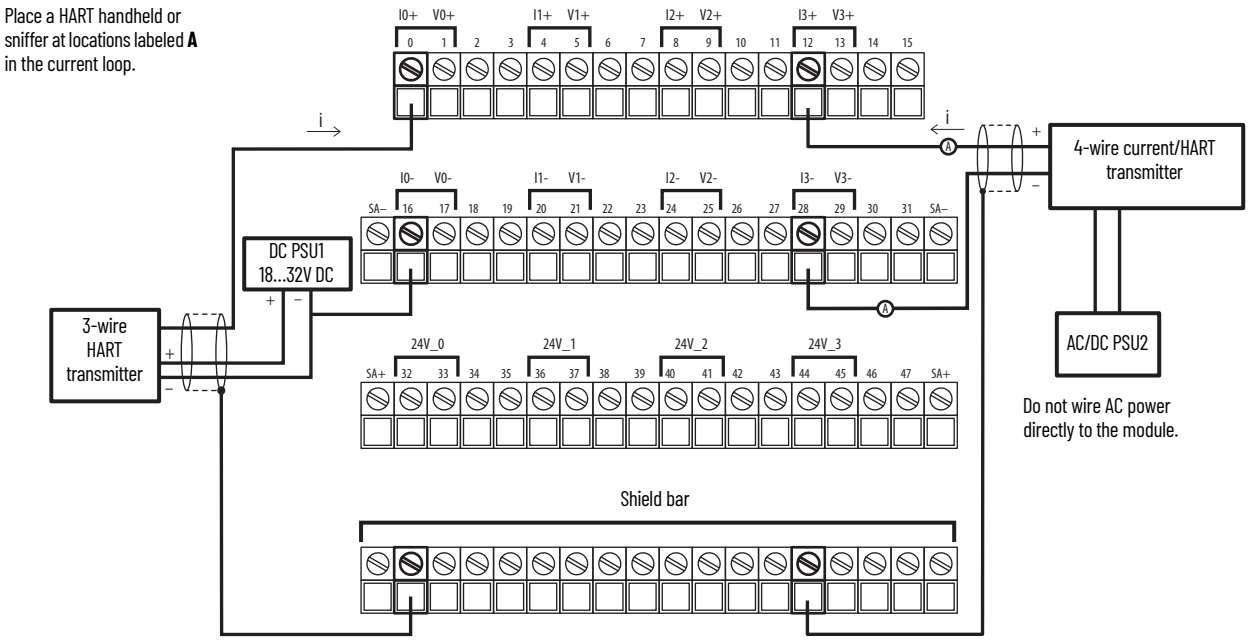

5094-IF4IHS and 5094-IF4IHSXT Wiring Diagram — 2-wire and 4-wire Voltage Transmitter

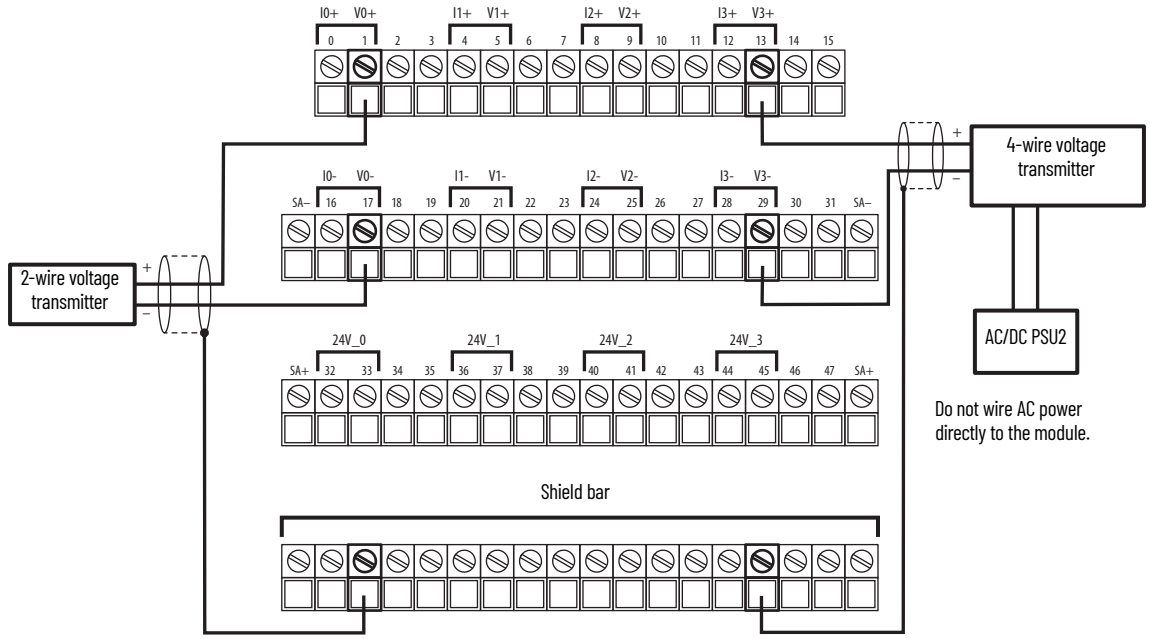

Wiring Connections for 5094-IF4IHS and 5094-IF4IHSXT

Channel	2-wire Current/HART Transmitter		3-wire and 4-wire Current/HART Transmitter		2-wire and 4-wire Voltage Transmitter	
	(+)	(-)	(+)	(-)	(+)	(-)
Input0	32	0	0	16	1	17
Input1	36	4	4	20	5	21
Input2	40	8	8	24	9	25
Input3	44	12	12	28	13	29
V DC Common	SA-					
+V DC power	SA+					
Shield bar (ground)	The shield bar accessory is available separately.					

This figure shows a functional block diagram for the 5094-IF4IHS and 5094-IF4IHSXT modules in current/HART Input mode.

5094-IF4IHS and 5094-IF4IHSXT Functional Block Diagram — 2-wire Current/HART Transmitter

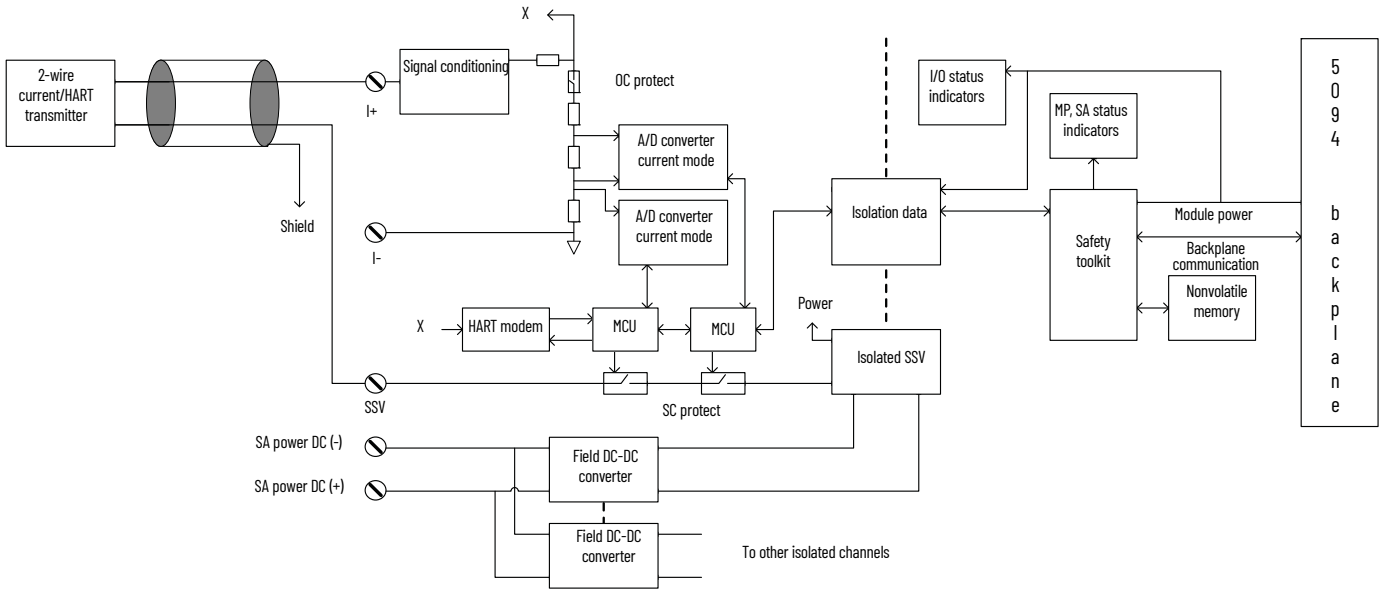

This figure shows a functional block diagram for the 5094-IF4IHS and 5094-IF4IHSXT modules in voltage mode.

5094-IF4IHS and 5094-IF4IHSXT Functional Block Diagram — 2-wire Voltage Transmitter

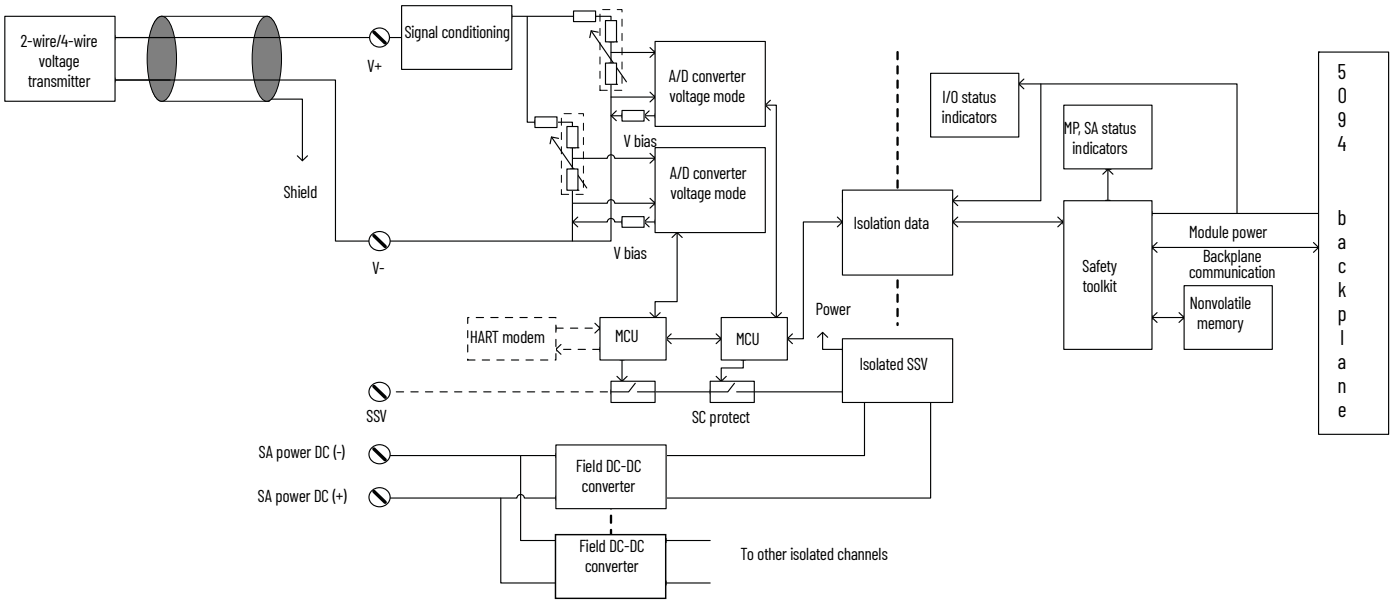

Technical Specifications - 5094-IF4IHS and 5094-IF4IHSXT

Attribute	5094-IF4IHS, 5094-IF4IHSXT
Inputs	4 individually isolated Supports current sourcing and differential signal
Input range, voltage	±10V 0...10V 0...5V
Input range, current	0...20 mA 4...20 mA (HART)

Technical Specifications - 5094-IF4IHS and 5094-IF4IHSXT (Continued)

Attribute	5094-IF4IHS, 5094-IF4IHSXT
Input impedance	Voltage: >1 MΩ Current: 280 Ω, ±15 Ω, typical
Channel to channel isolation	250V (continuous), Basic Insulation Type
Module conversion method	Sigma-Delta, 24-bit ADC per channel
HART support	Yes, per channel HART modem
HART scan time	typically 1 s Additional device variables, configured commands, pass through messages, handheld communicators, secondary masters, communication errors, or configuration changes can significantly increase the update time
Effective resolution, voltage[1] (at 60 Hz notch filter)	±10V: 17 bits 0...10V: 16 bits 0...5V: 15 bits
Effective resolution, current[1] (at 60 Hz notch filter)	0...20 mA: 17 bits 4...20 mA: 17 bits
Calibrated accuracy at 25 °C (77 °F)	Voltage: 0.05% full scale with 60 Hz filter Current: 0.05% full scale with 60 Hz filter HART enabled, typical values: 0.12% full scale with 10 Hz filter 0.20% full scale with 60 Hz filter 0.28% full scale with 100 Hz filter 0.32% full scale with 200 Hz filter 0.65% full scale with 500 Hz filter
Calibrated accuracy over 0...60 °C (32...140 °F) temperature range	Voltage: 0.1% full scale with 60 Hz filter Current: 0.1% full scale with 60 Hz filter HART enabled, typical values: 0.17% full scale with 10 Hz filter 0.25% full scale with 60 Hz filter 0.33% full scale with 100 Hz filter 0.36% full scale with 200 Hz filter 0.70% full scale with 500 Hz filter
Calibrated accuracy over full temperature range, -40...+70 °C (-40...+158 °F)	Voltage: 0.2% full scale with 60 Hz filter Current: 0.2% full scale with 60 Hz filter HART enabled, typical values: 0.27% full scale with 10 Hz filter 0.35% full scale with 60 Hz filter 0.43% full scale with 100 Hz filter 0.46% full scale with 200 Hz filter 0.80% full scale with 500 Hz filter
Scan Time @ 10 kHz notch Per channel Per module	2.0 ms 2.0 ms
Step response 63% @ 10 kHz notch	2.0 ms
Notch filter at min RPI (2 ms)	1000 Hz
Recommended RPI for 200 Hz notch filter with HART enabled	7 ms
Safety Integrity Level	Up to and including Cat. 4 / PLe acc. to EN ISO 13849-1, SIL CL 3 acc. to EN 62061, SIL 3 acc. to IEC 61508.[2]
Safety Reaction Time (SRT)	10 ms @ RPI of 2 ms and 10 kHz Notch Filter
Input notch filter (Hz) selections	5, 10 (50/60 Hz simultaneous rejection), 15, 20, 50, 60, 100, 200, 500 - for HART mode 5, 10 (50/60 Hz simultaneous rejection), 15, 20, 50, 60, 100, 200, 500, 1000, 2500, 5000, 10,000
Input digital filter	1st order lag, 0 ms (Default) - 32,767 ms (32.767 s)
HART handheld/secondary master compliance	Yes
Overvoltage protection, max	Voltage mode: ±32V DC Current mode: ±32V DC
Channel overcurrent protection	Current mode: 25.1 mA
SSV current, max	Current mode: 30.0 mA steady state
Sourcing voltage per channel, min	20V DC
Sourcing current per channel, max	25 mA
Short circuit recovery time	1 s
Data value during overrange condition	Voltage mode: 10.7V (±10V, 0...10V), 5.35V (0...5V) Current mode: 23 mA
Data value during underrange condition	Voltage mode: -10.7V (±10V), -0.041V (0...10V), -0.021V (0...5V) Current mode: 0.11 mA (0...20 mA), 3 mA (4...20 mA)
Open circuit detection time	Voltage mode: 9 s max value[1] Current mode: 0.5 s min[1], max value[1]
Onboard data alarming	Yes
Scaling to engineering units	Yes
Real-time channel sampling	Yes
Data format	IEEE 754 32-bit floating point

Technical Specifications - 5094-IF4IHS and 5094-IF4IHSXT (Continued)

Attribute	5094-IF4IHS, 5094-IF4IHSXT
Timestamp of inputs	Yes
CIP Sync	Yes
Safety accuracy	1% full scale without HART, no ramp 1% full scale with HART, no ramp 1% full scale without HART, with ramp 1% full scale with HART, with ramp
SSV overload detection	Yes, per channel
SSV overload protection	Yes
Module over-temperature detection	Yes
SA supply reverse voltage protection	Yes
SA supply overvoltage protection, max	60V

(1) Notch filter dependent.
(2) See the FLEX 5000 I/O Analog Isolated Current/Voltage/HART Standard and Safety Modules User Manual, publication 5094-UM007, for Safety Application Suitability Levels and Safety Data for Safety I/O Modules.

General Specifications - 5094-IF4IHS, 5094-IF4IHSXT

Attribute	5094-IF4IHS, 5094-IF4IHSXT
Backplane Power (BP) voltage	15V DC
Backplane Power (BP) current, max	100 mA
Sensor Actuator Power (SA) voltage range	18...32V DC
Sensor Actuator Power (SA) current, max	260 mA (includes per channel SSV output, 21 mA @ 25V for 2-wire HART device loop power)
Power dissipation, max	3.5 W
Thermal dissipation, max	11.94 BTU/hr
Isolation voltage	250V (continuous), Basic Insulation Type, System to Field SA to channel/SSV, SA to FE Channel to channel, Channel to FE
Calibration methods	Factory calibrated User-performed (optional)
Module keying	Mechanical keying or electronic keying via programming software.
Indicators	1 green/red module status indicator 1 green/red SA power status indicator 4 yellow/red I/O status indicators
Normal mode noise rejection ratio	65 dB @ 50/60 Hz, notch filter dependent
Common mode noise rejection ratio	130 db @50/60Hz, notch filter dependent
Terminal base (TB) assembly	**IMPORTANT:** Mounting bases (MBs) and removable terminal bases (RTBs) do not ship with the FLEX 5000 I/O modules. You must purchase a MB and a RTB individually for each I/O module. 5094-MB plus 5094-RTB3I (referred to in documentation as a non-orderable 5094-TB3I) 5094-MB plus 5094-RTB3IS (referred to in documentation as a non-orderable 5094-TB3IS) 5094-MBXT plus 5094-RTB3IXT (referred to in documentation as a non-orderable 5094-TB3IXT) 5094-MBXT plus 5094-RTB3ISXT (referred to in documentation as a non-orderable 5094-TB3ISXT)
TB keying	4 5
Supported mounting orientation	Horizontal, horizontal and inverted, vertical, vertical and inverted.
Wire category(1)	2 - shielded ports 2 - power ports
Wire size - signal	0.34...2.5 mm^2 (22...14 AWG) solid or stranded copper wire rated at 105 °C (221 °F), or greater, 1.2 mm (3/64 in.) insulation max
Wire size - power	2.5 mm^2 (14 AWG) Cu multi-strand
Dimensions (HxWxD), approx	87.0 x 94.0 x 54.0 mm (3.43 x 3.70 x 2.13 in.)
Weight, approx	160 g (0.353 lb)
Enclosure type	None (open-style
North American temp code	T4
UKEX/ATEX temp code	T4
IECEx temp code	T4

(1) Use this Conductor Category information for planning conductor routing. See the Industrial Automation Wiring and Grounding Guidelines, publication 1770-4.1.
Use this Conductor Category information for planning conductor routing as described in the appropriate System Level Installation Manual.

Environmental Specifications – 5094-IF4IHS, 5094-IF4IHSXT

Attribute	5094-IF4IHS, 5094-IF4IHSXT
Temperature, operating IEC 60068-2-1 (Test Ad, Operating Cold), IEC 60068-2-2 (Test Bd, Operating Dry Heat), IEC 60068-2-14 (Test Nb, Operating Thermal Shock)	-40 °C ≤ Ta ≤ +70 °C (-40 °F ≤ Ta ≤ +158 °F)
Temperature, surrounding air, max	70 °C (158 °F)
Temperature, nonoperating IEC 60068-2-1 (Test Ab, Unpackaged Nonoperating Cold), IEC 60068-2-2 (Test Bb, Unpackaged Nonoperating Dry Heat), IEC 60068-2-14 (Test Na, Unpackaged Nonoperating Thermal Shock)	-40...+85 °C (-40...+185 °F)
Relative humidity IEC 60068-2-30 (Test Db, Unpackaged Damp Heat)	5...95% noncondensing
Vibration IEC 60068-2-6 (Test Fc, Operating)	5 g @ 10...500 Hz
Shock, operating IEC 60068-2-27 (Test Ea, Unpackaged Shock)	30 g
Shock, nonoperating IEC 60068-2-27 (Test Ea, Unpackaged Shock)	30 g
Emissions	IEC 61000-6-4
ESD immunity IEC 61000-4-2	6 kV contact discharges 8 kV air discharges
Radiated RF immunity IEC 61000-4-3	10V/m with 1 kHz sine wave 80% AM from 80...2000 MHz 10V/m with 200 Hz 50% pulse 100% AM @ 900 MHz 10V/m with 200 Hz 50% pulse 100% AM @ 1890 MHz 10V/m with 1 kHz sine wave 80% AM from 2000...2700 MHz 3V/m with 1 kHz sine wave 80% AM from 2000...6000 MHz
EFT/B immunity IEC 61000-4-4	±4 kV @ 5 kHz on power ports ±3 kV @ 5 kHz on shielded ports
Surge transient immunity IEC 61000-4-5	±2 kV line-earth (CM) on shielded ports
Conducted RF immunity IEC 61000-4-6	10V rms with 1 kHz sine wave 80% AM from 150 kHz...80 MHz
Corrosion resistance classification	5094-IF4IHS - ISA S71.04 G2 5094-IF4IHSXT - ISA S71.04 G3

Certifications – 5094-IF4IHS, 5094-IF4IHSXT

Certification[1]	5094-IF4IHS, 5094-IF4IHSXT
c-UL-us	UL Listed Industrial Control Equipment, certified for US and Canada. See UL File E322657. UL Listed for Class I, Division 2 Group A,B,C,D Hazardous Locations, certified for U.S. and Canada. See UL File E334470.
CE	European Union 2014/30/EU EMC Directive, compliant with: EN 61326-1; Meas./Control/Lab., Industrial Requirements EN 61000-6-2; Industrial Immunity EN 61000-6-4; Industrial Emissions EN 61131-2; Programmable Controllers (Clause 8, Zone A & B) European Union 2014/35/EU LVD, compliant with: EN 61010-2-201; Control Equipment Safety Requirements European Union 2011/65/EU RoHS, compliant with: EN IEC 63000:2018; Technical documentation
RCM	Australian Radiocommunications Act, compliant with: EN 61000-6-4; Industrial Emissions
Ex	UK Statutory Instrument 2016 No. 1107 and European Union 2014/34/EU ATEX Directive, compliant with: EN IEC 60079-0; General Requirements EN IEC 60079-7; Explosive Atmospheres, Protection "e" II 3 G Ex ec IIC T4 Gc UL 20 ATEX 2494X UL22UKEX2504X
IECEx	IECEx System, compliant with: IEC 60079-0; General Requirements IEC 60079-7; Potentially Explosive Atmospheres, Protection "e" Ex ec IIC T4 Gc IECEx UL 20.0149X
TÜV	TÜV Certified for Functional Safety: Up to and including Cat. 4 / PLe acc. to EN ISO 13849-1, SIL CL 3 acc. to EN 62061, SIL 3 acc. to IEC 61508[2]
KC	Korean Registration of Broadcasting and Communications Equipment, compliant with: Article 58-2 of Radio Waves Act, Clause 3
Morocco	Arrêté ministériel n° 6404-15 du 1 er muharram 1437 Arrêté ministériel n° 6404-15 du 29 ramadan 1436

Certifications - 5094-IF4IHS, 5094-IF4IHSXT (Continued)

Certification[1]	5094-IF4IHS, 5094-IF4IHSXT
EAC	Russian Customs Union TR CU 020/2011 EMC Technical Regulation Russian Customs Union TR CU 004/2011 LV Technical Regulation
CCC	CNCA-C23-01 强制性产品认证实施规则 防爆电气 CNCA-C23-01 CCC Implementation Rule Explosion-Proof Electrical Products
UKCA	2016 No. 1091 - Electromagnetic Compatibility Regulations 2016 No. 1101 - Electrical Equipment (Safety) Regulations 2016 No. 1107 - Equipment and Protective Systems Intended for Use in Potentially Explosive Atmospheres Regulations 2012 No. 3032 - Restriction of the Use of Certain Hazardous Substances in Electrical and Electronic Equipment Regulations

(1) When marked. See the Product Certifications website at rok.auto/certifications for declarations of conformity, certificates, and other certification details.
(2) When used as described in the GuardLogix 5580 and Compact GuardLogix 5380 Controller Systems Reference Manual, publication 1756-RM012, and the FLEX 5000 I/O Analog Isolated Current/Voltage/HART Standard and Safety Modules User Manual, publication 5094-UM007, for Safety Application Suitability Levels and Safety Data for Safety I/O Modules.

5094-OF4IHS and 5094-OF4IHSXT Safety Analog 4-channel HART Output Modules

These figures show wiring diagrams for the 5094-OF4IHS and 5094-OF4IHSXT safety modules. You must connect a 24V DC power source to the left SA+/– terminals to provide field-side power.

IMPORTANT
- To ensure proper operation and high immunity to electrical noise, always use Belden 8761 (shielded, twisted-pair) or equivalent wire.
- The 5094-STB shield bar is required to wire the shields for the 5094-OF4IHS and 5094-OF4IHSXT modules. Order catalog number 5094-STB-QTY5 (pk of 5).
- All 5094-STB shield-bar screws are bussed together. You must ground the shield bar to functional earth.

5094-OF4IHS and 5094-OF4IHSXT Wiring Diagram — 2-wire or 4-wire Current/HART Actuator

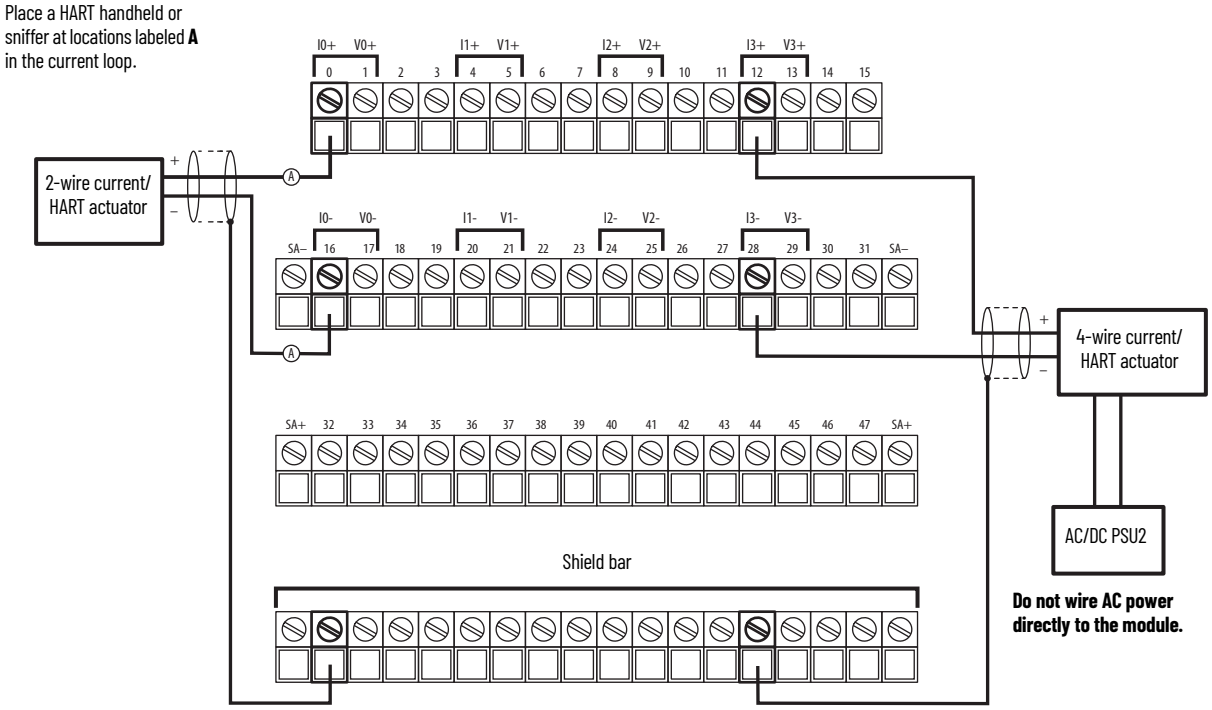

5094-OF4IHS and 5094-OF4IHSXT Wiring Diagram — 2-wire or 4-wire Voltage Actuator

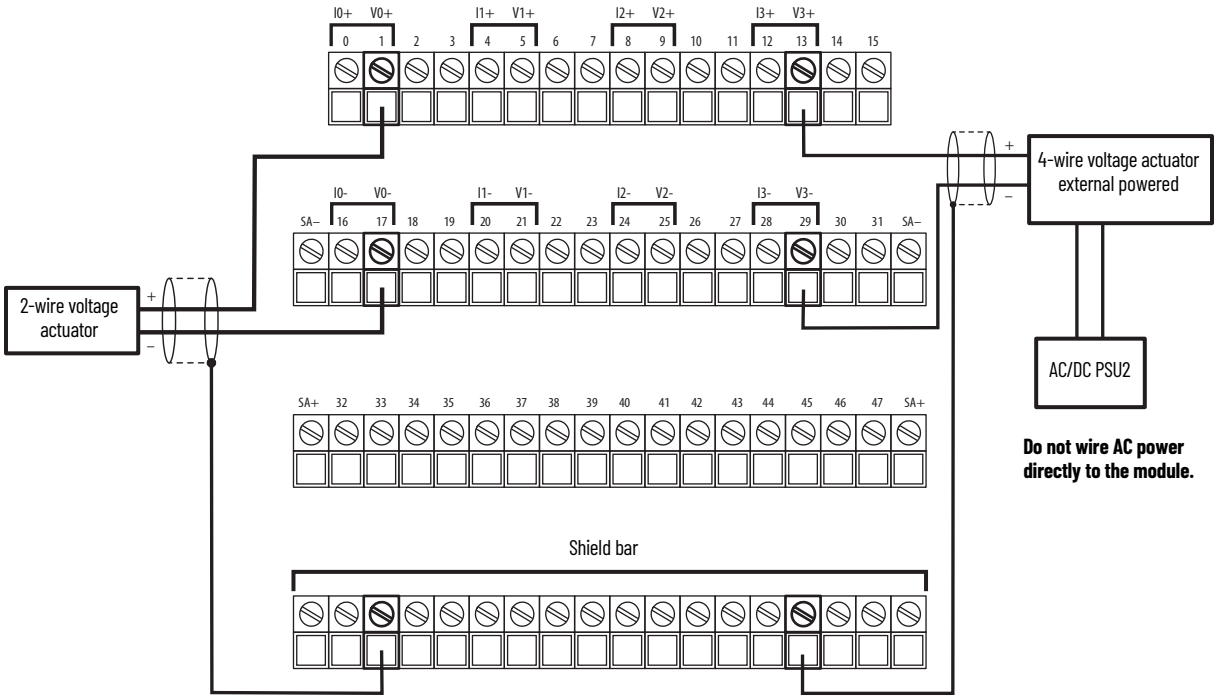

Wiring Connections for 5094-OF4IHS and 5094-OF4IHSXT

Channel	2-wire and 4-wire Current/HART Actuator		2-wire and 4-wire Voltage Actuator	
	(+)	(–)	(+)	(–)
Output0	0	16	1	17
Output1	4	20	5	21
Output2	8	24	9	25
Output3	12	28	13	29
V DC common	SA–			
+V DC power	SA+			
Shield bar (ground)	The shield bar accessory is available separately.			

This figure shows a functional block diagram for the 5094-OF4IHS and 5094-OF4IHSXT modules in current mode.

5094-OF4IHS and 5094-OF4IHSXT Functional Block Diagram — 2-wire and 4-wire Current/HART Actuator

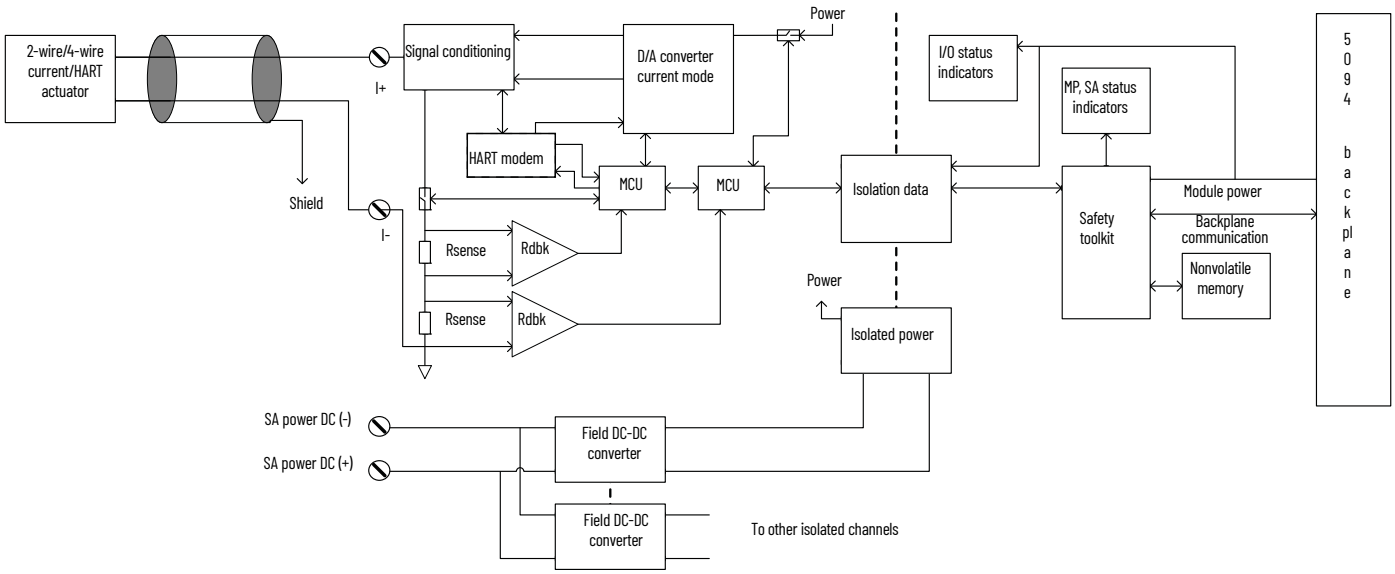

This figure shows a functional block diagram for the 5094-OF4IHS and 5094-OF4IHSXT modules in voltage mode.

5094-OF4IHS and 5094-OF4IHSXT Functional Block Diagram — 2-wire and 4-wire Voltage Actuator

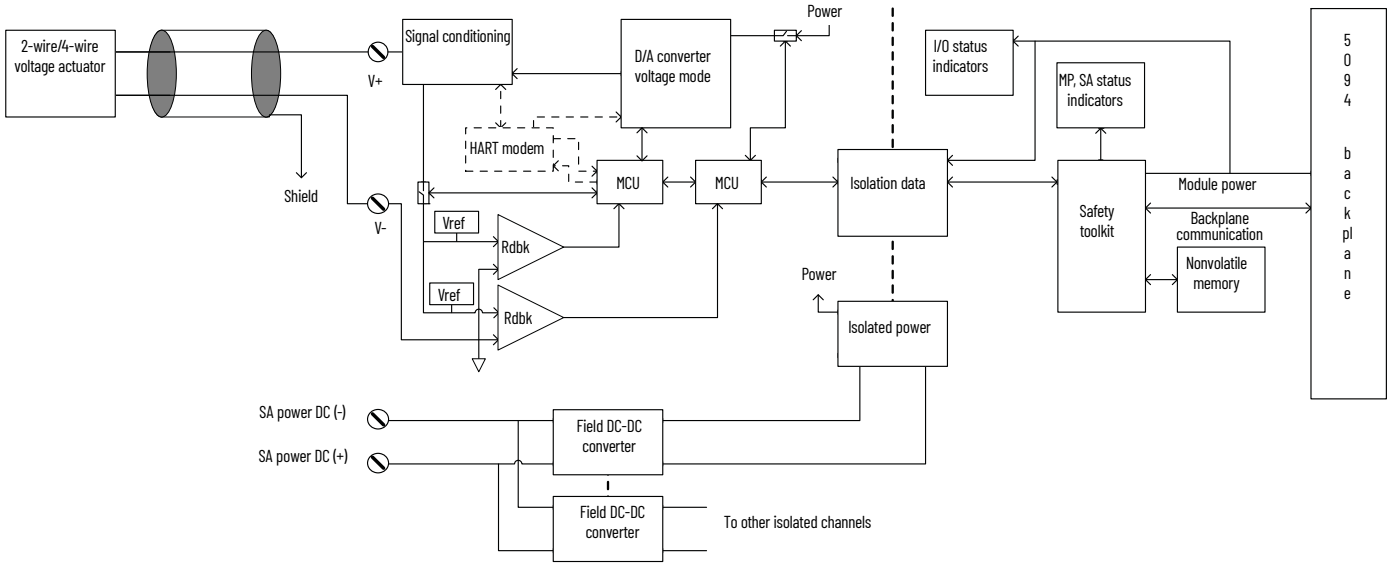

Technical Specifications - 5094-OF4IHS, 5094-OF4IHSXT

Attribute	5094-OF4IHS, 5094-OF4IHSXT
Outputs	4 individually isolated
Output range, voltage	±10V 0...10V 0...5V
Output range, current	0...20 mA 4...20 mA (HART)
Resolution	16 bits ±10V: 366 µV/bit 0...10V: 183 µV/bit 0...5V: 92 µV/bit 0...20 mA: 366 nA/bit 4...20 mA: 366 nA/bit
Drive capability	Voltage - 3000 Ω min Current - 750 Ω max
Capacitive load, max (voltage mode only)	1 µF
Inductive load, max (current mode only)	1 mH
Open circuit detection	Current mode only
Short circuit detection	Voltage mode only
Data format	IEEE 754 32-bit floating point
Channel to channel isolation	250V (continuous), Basic Insulation Type
Module conversion method	R-Ladder DAC, monotonicity with no missing codes
HART support	Yes, per channel HART modem
HART scan time	Typically 1 s. Additional device variables, configured commands, pass through messages, handheld communicators, secondary masters, communication errors, or configuration changes can significantly increase the update time.
Conversion time per channel at 25 °C (77 °F), typical	Voltage mode: 2.0 ms Current mode: 2.0 ms
Scan time (all channels 0...4)	2.0 ms
Step response time to 63% of value	2.5 ms
Overvoltage protection, max	Voltage mode: ±32V DC Current mode: ±32V DC
Repeatability	0.05%
Calibrated accuracy at 25 °C (77 °F)	Voltage: 0.05% full scale Current: 0.05% full scale
Calibrated accuracy over 0...60 °C (32...140 °F) temperature range	Voltage: 0.1% full scale Current: 0.1% full scale
Calibrated accuracy over full temperature range, -40...+70 °C (-40...+158 °F)	Voltage: 0.2% full scale Current: 0.2% full scale

Technical Specifications – 5094-OF4IHS, 5094-OF4IHSXT (Continued)

Attribute	5094-OF4IHS, 5094-OF4IHSXT
Readback accuracy at 25 °C (77 °F)	Voltage: 1% full scale for ±10V and 0...10V and 0...5V Current: 1% full scale HART mode: <1% full scale typical
HART handheld/secondary master compliance	Yes
CIP Sync	Yes
Safety Integrity Level	Up to and including Cat. 4 / PLe acc. to EN ISO 13849-1, SIL CL 3 acc. to EN 62061, SIL 3 acc. to IEC 61508.(1)
Safety Reaction Time (SRT)	10 ms @ RPI of 2 ms and 10 kHz Notch Filter
Module over-temperature detection	Yes
SA supply reverse voltage protection	Yes
SA supply overvoltage protection, max	60V

(1) See the FLEX 5000 I/O Analog Isolated Current/Voltage/HART Standard and Safety Modules User Manual, publication 5094-UM007, for Safety Application Suitability Levels and Safety Data for Safety I/O Modules.

General Specifications – 5094-OF4IHS, 5094-OF4IHSXT

Attribute	5094-OF4IHS, 5094-OF4IHSXT
Backplane Power (BP) voltage	15V DC
Backplane Power (BP) current, max	100 mA
Sensor Actuator Power (SA) voltage range	18...32V DC
Sensor Actuator Power (SA) current, max	260 mA
Power dissipation, max	3.5 W
Thermal dissipation, max	11.94 BTU/hr
Isolation voltage	250V (continuous), Basic Insulation Type, System to Field SA to channel/SSV, SA to FE Channel to channel, Channel to FE
Calibration methods	Factory Calibrated User-performed (optional)
Module keying	Mechanical keying or electronic keying via programming software.
Indicators	1 green/red module status indicator 1 green/red SA power status indicator 4 yellow/red I/O status indicators
Terminal base (TB) assembly	**IMPORTANT:** Mounting bases (MBs) and removable terminal bases (RTBs) do not ship with the FLEX 5000 I/O modules. You must purchase a MB and a RTB individually for each I/O module. 5094-MB plus 5094-RTB3I (referred to in documentation as a non-orderable 5094-TB3I) 5094-MB plus 5094-RTB3IS (referred to in documentation as a non-orderable 5094-TB3IS) 5094-MBXT plus 5094-RTB3IXT (referred to in documentation as a non-orderable 5094-TB3IXT) 5094-MBXT plus 5094-RTB3ISXT (referred to in documentation as a non-orderable 5094-TB3ISXT)
TB keying	3 5
Supported mounting orientation	Horizontal, horizontal and inverted, vertical, vertical and inverted.
Wire category(1)	2 - shielded ports 2 - power ports
Wire size - signal	0.34...2.5 mm^2 (22...14 AWG) solid or stranded copper wire rated at 105 °C (221 °F), or greater, 1.2 mm (3/64 in.) insulation max
Wire size - power	0.34...2.5 mm^2 (22...14 AWG) solid or stranded copper wire rated at 105 °C (221 °F), or greater, 1.2 mm (3/64 in.) insulation max
Dimensions (HxWxD), approx	87.0 x 94.0 x 54.0 mm (3.43 x 3.70 x 2.13 in.)
Weight, approx	160 g (0.353 lb)
Enclosure type	None (open-style)
North American temp code	T4
UKEX/ATEX temp code	T4
IECEx temp code	T4

(1) Use this Conductor Category information for planning conductor routing. See the Industrial Automation Wiring and Grounding Guidelines, publication 1770-4.1.
Use this Conductor Category information for planning conductor routing as described in the appropriate System Level Installation Manual.

Environmental Specifications – 5094-OF4IHS, 5094-OF4IHSXT

Attribute	5094-OF4IHS, 5094-OF4IHSXT
Temperature, operating IEC 60068-2-1 (Test Ad, Operating Cold), IEC 60068-2-2 (Test Bd, Operating Dry Heat), IEC 60068-2-14 (Test Nb, Operating Thermal Shock)	-40 °C ≤ Ta ≤ +70 °C (-40 °F ≤ Ta ≤ +158 °F)
Temperature, surrounding air, max	70 °C (158 °F)
Temperature, nonoperating IEC 60068-2-1 (Test Ab, Unpackaged Nonoperating Cold), IEC 60068-2-2 (Test Bb, Unpackaged Nonoperating Dry Heat), IEC 60068-2-14 (Test Na, Unpackaged Nonoperating Thermal Shock)	-40...+85 °C (-40...+185 °F)
Relative humidity IEC 60068-2-30 (Test Db, Unpackaged Damp Heat)	5...95% noncondensing
Vibration IEC 60068-2-6 (Test Fc, Operating)	5 g @ 10...500 Hz
Shock, operating IEC 60068-2-27 (Test Ea, Unpackaged Shock)	30 g
Shock, nonoperating IEC 60068-2-27 (Test Ea, Unpackaged Shock)	30 g
Emissions	IEC 61000-6-4
ESD immunity IEC 61000-4-2	6 kV contact discharges 8 kV air discharges
Radiated RF immunity IEC 61000-4-3	10V/m with 1 kHz sine wave 80% AM from 80...2000 MHz 10V/m with 200 Hz 50% pulse 100% AM @ 900 MHz 10V/m with 200 Hz 50% pulse 100% AM @ 1890 MHz 10V/m with 1 kHz sine wave 80% AM from 2000...2700 MHz 3V/m with 1 kHz sine wave 80% AM from 2000...6000 MHz
EFT/B immunity IEC 61000-4-4	±4 kV @ 5 kHz on power ports ±3 kV @ 5 kHz on shielded ports
Surge transient immunity IEC 61000-4-5	±2 kV line-earth (CM) on shielded ports
Conducted RF immunity IEC 61000-4-6	10V rms with 1 kHz sine wave 80% AM from 150 kHz...80 MHz
Corrosion resistance classification	5094-OF4IHS - ISA S71.04 G2 5094-OF4IHSXT - ISA S71.04 G3

Certifications – 5094-OF4IHS, 5094-OF4IHSXT

Certification[1]	5094-OF4IHS, 5094-OF4IHSXT
c-UL-us	UL Listed Industrial Control Equipment, certified for US and Canada. See UL File E322657. UL Listed for Class I, Division 2 Group A,B,C,D Hazardous Locations, certified for U.S. and Canada. See UL File E334470.
CE	European Union 2014/30/EU EMC Directive, compliant with: EN 61326-1; Meas./Control/Lab., Industrial Requirements EN 61000-6-2; Industrial Immunity EN 61000-6-4; Industrial Emissions EN 61131-2; Programmable Controllers (Clause 8, Zone A & B) European Union 2014/35/EU LVD, compliant with: EN 61010-2-201; Control Equipment Safety Requirements European Union 2011/65/EU RoHS, compliant with: EN IEC 63000:2018; Technical documentation
RCM	Australian Radiocommunications Act, compliant with: EN 61000-6-4; Industrial Emissions
Ex	UK Statutory Instrument 2016 No. 1107 and European Union 2014/34/EU ATEX Directive, compliant with: EN IEC 60079-0; General Requirements EN IEC 60079-7; Explosive Atmospheres, Protection "e" II 3 G Ex ec IIC T4 Gc UL 20 ATEX 2494X UL22UKEX2504X
IECEx	IECEx System, compliant with: IEC 60079-0; General Requirements IEC 60079-7; Potentially Explosive Atmospheres, Protection "e" Ex ec IIC T4 Gc IECEx UL 20.0149X
TÜV	TÜV Certified for Functional Safety: Up to and including Cat. 4 / PLe acc. to EN ISO 13849-1, SIL CL 3 acc. to EN 62061, SIL 3 acc. to IEC 61508[2]
KC	Korean Registration of Broadcasting and Communications Equipment, compliant with: Article 58-2 of Radio Waves Act, Clause 3
Morocco	Arrêté ministériel n° 6404-15 du 1 er muharram 1437 Arrêté ministériel n° 6404-15 du 29 ramadan 1436

Certifications - 5094-OF4IHS, 5094-OF4IHSXT (Continued)

Certification[1]	5094-OF4IHS, 5094-OF4IHSXT
EAC	Russian Customs Union TR CU 020/2011 EMC Technical Regulation Russian Customs Union TR CU 004/2011 LV Technical Regulation
CCC	CNCA-C23-01 强制性产品认证实施规则 防爆电气 CNCA-C23-01 CCC Implementation Rule Explosion-Proof Electrical Products
UKCA	2016 No. 1091 - Electromagnetic Compatibility Regulations 2016 No. 1101 - Electrical Equipment (Safety) Regulations 2016 No. 1107 - Equipment and Protective Systems Intended for Use in Potentially Explosive Atmospheres Regulations 2012 No. 3032 - Restriction of the Use of Certain Hazardous Substances in Electrical and Electronic Equipment Regulations

(1) When marked. See the Product Certifications website at rok.auto/certifications for declarations of conformity, certificates, and other certification details.
(2) When used as described in the GuardLogix 5580 and Compact GuardLogix 5380 Controller Systems Reference Manual, publication 1756-RM012, and the FLEX 5000 I/O Analog Isolated Current/Voltage/HART Standard and Safety Modules User Manual, publication 5094-UM007, for Safety Application Suitability Levels and Safety Data for Safety I/O Modules.

5094-IRT8S and 5094-IRT8SXT Safety Analog 8-channel Thermocouple/RTD Input Modules

This figure shows a wiring diagram for the 5094-IRT8S and 5094-IRT8SXT safety modules. You must connect a 24V DC power source to the left SA+/– terminals to provide field-side power.

IMPORTANT
- To ensure proper operation and high immunity to electrical noise, always use Belden 8761 (shielded, twisted-pair) or equivalent wire with shield connected to earth near the 5094 module.
- The 5094-STB shield bar accessory is required to wire the shields for the 5094-IRT8S modules using the 5094-TB3IT or 5094-TB3ITS terminal base assemblies. Catalog number 5094-STB is available separately.

These examples apply to the 5094-IRT8S and 5094-IRT8SXT analog input modules when used in RTD mode.

5094-IRT8S and 5094-IRT8SXT Wiring Diagram — 2-wire RTD Mode

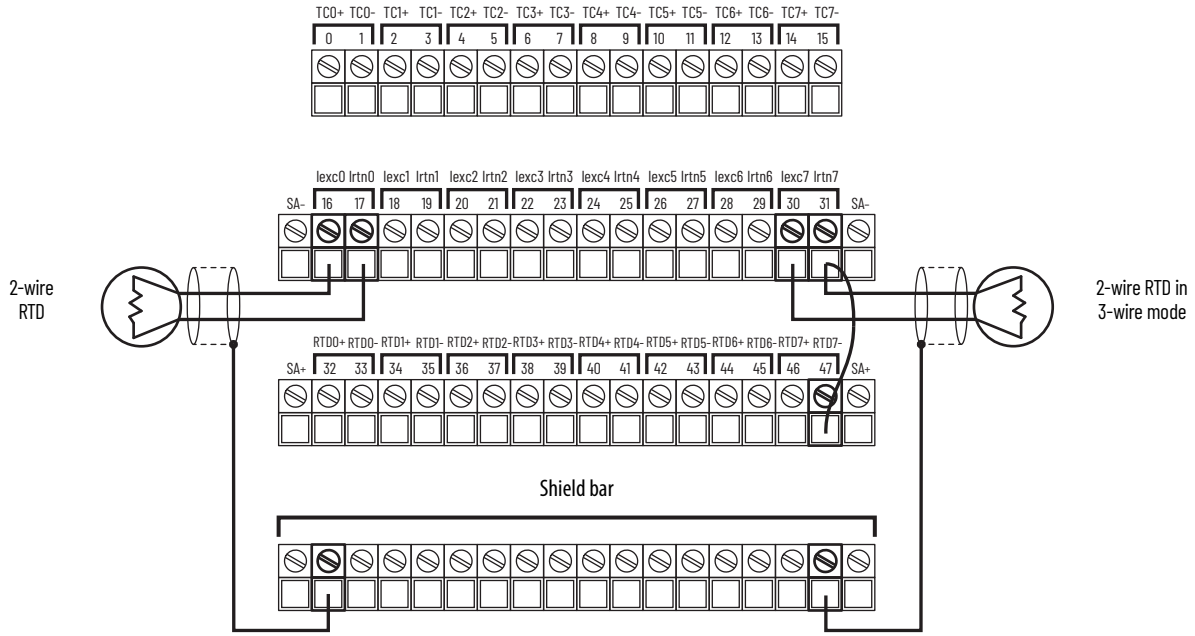

5094-IRT8S and 5094-IRT8SXT Wiring Diagram — 3-wire and 4-wire RTD Mode

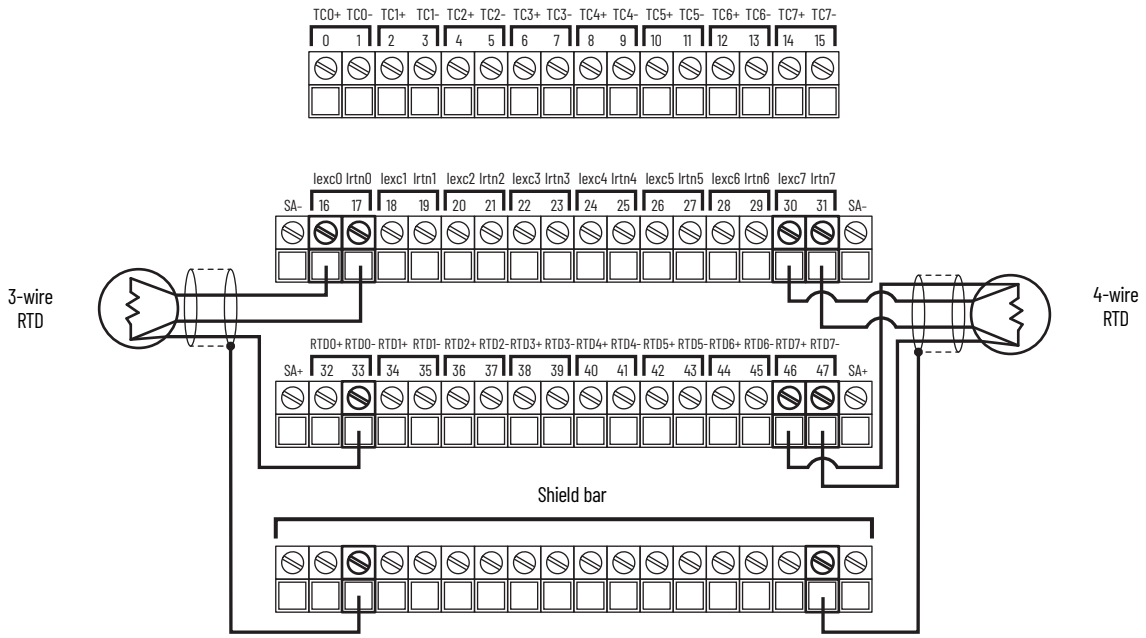

This example applies to the 5094-IRT8S and 5094-IRT8SXT analog input modules when used in Thermocouple mode.

5094-IRT8S and 5094-IRT8SXT Wiring Diagram — Thermocouple Mode

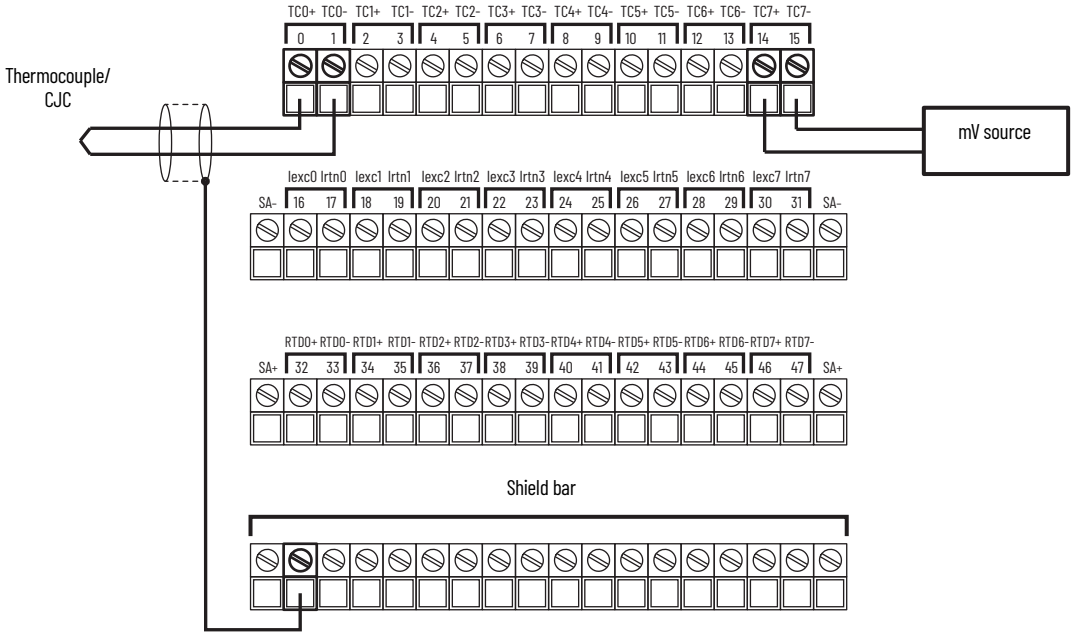

Wiring Connections for 5094-IRT8S and 5094-IRT8SXT

Channel	Thermocouple (+)	Thermocouple (–)	Iexc	Irtn	RTD (+)	RTD (–)
Input 0	0	1	16	17	32	33
Input 1	2	3	18	19	34	35
Input 2	4	5	20	21	36	37
Input 3	6	7	22	23	38	39
Input 4	8	9	24	25	40	41
Input 5	10	11	26	27	42	43

Wiring Connections for 5094-IRT8S and 5094-IRT8SXT (Continued)

Channel	Thermocouple (+)	Thermocouple (-)	Iexc	Irtn	RTD (+)	RTD (-)
Input 6	12	13	28	29	44	45
Input 7	14	15	30	31	46	47
V DC common	SA–					
+V DC power	SA+					
Shield bar (ground)	The shield bar accessory is available separately.					

This figure shows a functional block diagram for the 5094-IRT8S and 5094-IRT8SXT safety modules.

5094-IRT8S and 5094-IRT8SXT Functional Block Diagram

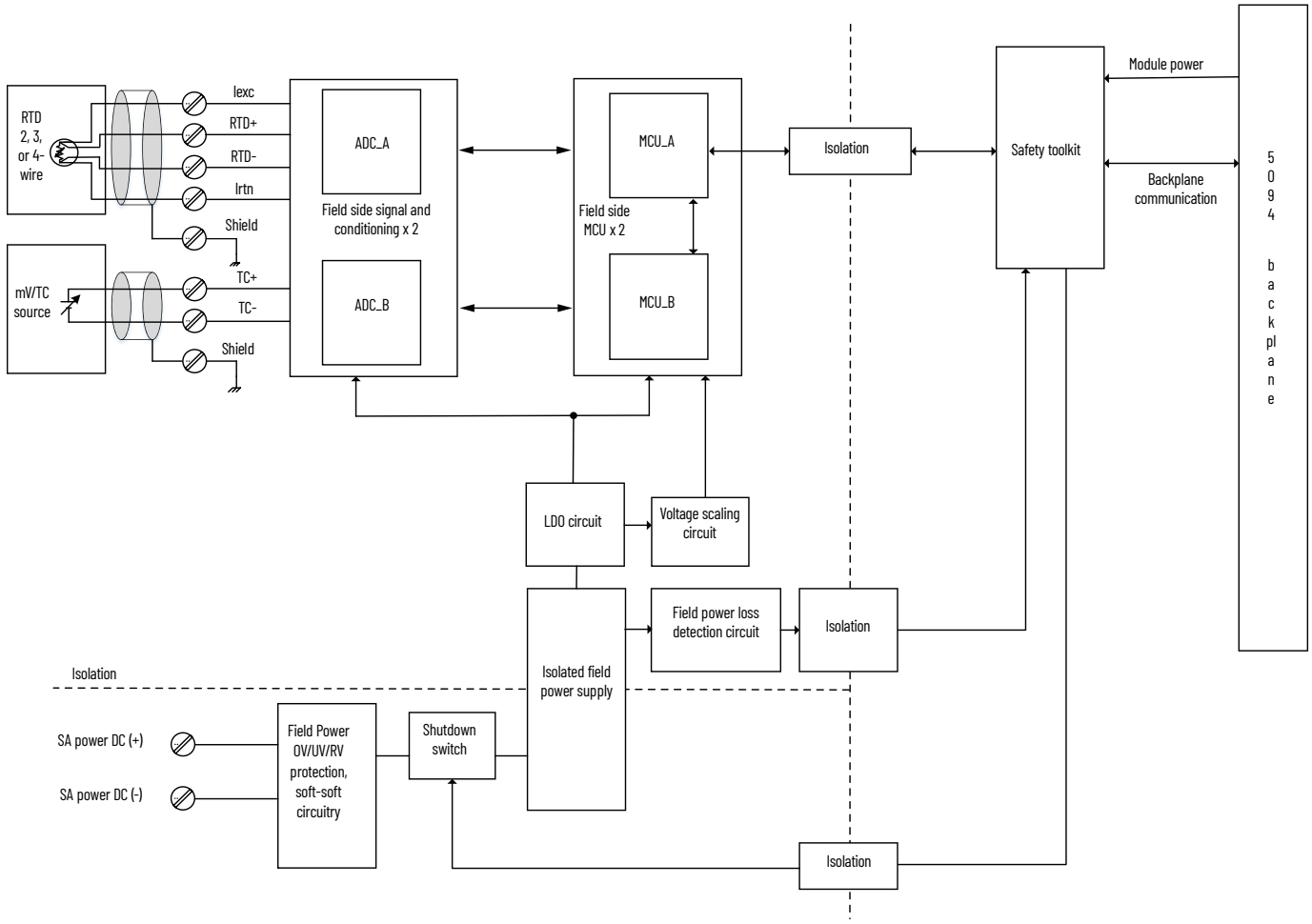

Technical Specifications – 5094-IRT8S, 5094-IRT8SXT

Attribute	5094-IRT8S, 5094-IRT8SXT
Inputs	8 channel (4 isolated group of two pseudo-differential analog) - Group 0 (Channel 0 and 2), Group 1 (Channel 1 and 3), Group 2 (Channel 4 and 6), Group 3 (Channel 5 and 7)
Input range, Resistive	1...500 Ω 2...1000 Ω 4...2000 Ω 8...4000 Ω
Input type, RTD	100, 200, 500, 1000 Ω platinum, alpha=385 100, 200, 500, 1000 Ω platinum, alpha=3916 120 Ω nickel, alpha=672 100, 120, 200, 500 Ω nickel, alpha=618 10 Ω copper 427
Input range, mV	±100 mV
Input type, thermocouple	B, C, D, E, J, K, N, R, S, T, TXK/XK(L)

Technical Specifications - 5094-IRT8S, 5094-IRT8SXT (Continued)

Attribute	5094-IRT8S, 5094-IRT8SXT
Input impedance	Thermocouple/millivolt: >1 MΩ RTD: >1 MΩ
Common mode voltage (channel to channel)	±2V within group 250V Basic Isolation between groups
Module conversion method	Sigma-Delta, 24-bit multiplexed ADC
Resolution, RTD/resistive	16 bit @ 60 Hz (16 bits over 500, 1000, 2000, and 4000 Ω range)
Resolution, thermocouple/millivolt	16 bit @ 60 Hz (16 bits over ±100 mV range)
RTD excitation current	250 µA for 1000 Ω, 2000 Ω, and 4000 Ω range 500 µA for 500 Ω range
Thermocouple linearization	ITS-90
Number of Cold Junction Compensators (CJCs)	8 independent thermistors 10 kΩ at 25 °C (77 °F) One CJC per channel See 5094-RTB3IT Documentation
CJC type	Thermistor type: (TE Connectivity) 10K3A1A
CJC Conversion method	14-bit SAR
CJC accuracy (using 5094-RTB3IT)	Typical (±0.5 °C @ -20 °C...+70 °C), Typical (±1 °C @ -40 °C...-20 °C)
Calibrated accuracy at 25 °C (77 °F)	Thermocouple/millivolt: 0.05% full scale Ohm/RTD: 0.05% full scale
Accuracy drift with temperature	0.2% full scale at 70 °C 0.3% full scale at -40 °C
Scan time	2 ms @ 10 KHz notch filter
Minimum RPI	2 ms
Notch filter selections (Hz) selections	5, 10, 20, 50, 60 (default), 100, 200, 500, 1000, 2500, 5000, 10000
Hardware input filter	1 kHz
Input digital filter	1st Order Lag 0 ms (Default) - 32,767 ms (32.767 s)
Normal mode noise rejection ratio	65 dB @ 50/60 Hz, notch filter dependent
Safety Integrity Level	Up to and including Cat. 4 / PLe acc. to EN ISO 13849-1, SIL CL 3 acc. to EN 62061, SIL 3 acc. to IEC 61508(1)
Safety Reaction Time (SRT)	10 ms @ RPI of 2 ms and 10 kHz Notch Filter
Module over-temperature detection	Yes
Overvoltage protection, max	±32V DC
SA supply reverse voltage protection	Yes
SA supply overvoltage protection, max	60V
Open wire detection time	mv: < 350 ms Thermocouple (All Types): < 200 ms Ohm/RTD: < 100 ms Note: @ 100 Hz to 10 KHz notch filter settings
Onboard data alarming	Yes
Scaling to engineering units	Only applies to RTD: ohms and TC: mV mode.
Real-time channel sampling	Yes
Data format	IEEE 754 32-bit floating point
Calibration methods	Factory calibrated User-performed (optional)
CIP Sync	Yes

(1) See the FLEX 5000 Analog I/O Modules User Manual, publication 5094-UM002, for Safety Application Suitability Levels and Safety Data for Safety I/O Modules modules. The specific level of current passed through varies based on system configuration.

Technical Specifications - 5094-IRT8S, 5094-IRT8SXT — RTD Sensors

RTD Sensor Types/Temperature Range: (Each sensor type in a cell supports all temperature ranges in the corresponding column to the right.)	
100, 200, 500, 1000 Ohm PT 385	-200...+870 °C -328...+1598 °F 73...1143 °K 132...2058 °R
100, 200, 500, 1000 Ohm PT 3916	-200...+630 °C -328...+1166 °F 73...903 °K 132...1626 °R

Technical Specifications - 5094-IRT8S, 5094-IRT8SXT — RTD Sensors (Continued)

RTD Sensor Types/Temperature Range: (Each sensor type in a cell supports all temperature ranges in the corresponding column to the right.)	
10 Ohm CU 427	-200...+260 °C -328...+500 °F 73...533 °K 132...960 °R
120 Ohm NI 672	-80...+320 °C -112...+608 °F 193...593 °K 348...1068 °R
100, 120, 200, 500 Ohm NI 618	-60...+250 °C -76...+482 °F 213...523 °K 384...942 °R

Technical Specifications - 5094-IRT8S, 5094-IRT8SXT — Thermocouples

Thermocouple Type/Temperature Range:	
Thermocouple Type B	21...1820 °C 68...3308 °F 293...2093 °K 528...3768 °R
Thermocouple Type C	0...2315 °C 32...4199 °F 273...2588 °K 492...4659 °R
Thermocouple Type D	0...2315 °C 32...4199 °F 273...2588 °K 492...4659 °R
Thermocouple Type E	-270...+1000 °C -454...+1832 °F 3...1273 °K 6...2292 °R
Thermocouple Type J	-210...+1200 °C -346...+2192 °F 63...1473 °K 114...2652 °R
Thermocouple Type K	-270...+1372 °C -454...+2502 °F 3...1645 °K 6...2961 °R
Thermocouple Type N	-270...+1300 °C -454...+2372 °F 3...1573 °K 6...2832 °R
Thermocouple Type R	-50...+1768 °C -58...+3215 °F 223...2041 °K 402...3674 °R
Thermocouple Type S	-50...+1768 °C -58...+3215 °F 223...2041 °K 402...3674 °R
Thermocouple Type T	-270...+400 °C -454...+752 °F 3...673 °K 6...1212 °R
Thermocouple Type TXK/XK(L)	-200...+800 °C -328...+1472 °F 73...1073 °K 132...1932 °R

General Specifications - 5094-IRT8S, 5094-IRT8SXT

Attribute	5094-IRT8S, 5094-IRT8SXT
Backplane Power (BP) voltage	15V DC
Backplane Power (BP) current, max	55 mA
Sensor Actuator Power (SA) voltage range	18...32V DC
Sensor Actuator Power (SA) current, max	95 mA
Power dissipation, max	3 W
Thermal dissipation, max	10.23 BTU/hr

General Specifications – 5094-IRT8S, 5094-IRT8SXT (Continued)

Attribute	5094-IRT8S, 5094-IRT8SXT
Isolation voltage	250V (continuous), Basic Insulation between groups 250V (continuous), Basic Insulation between system and field 250V (continuous), Basic Insulation between SA power and Inputs
Module keying	Mechanical keying or electronic keying via programming software.
Indicators	1 green/red module status indicator 1 green/red SA power status indicator 8 yellow/red I/O status indicators
Terminal base (TB) assembly	**IMPORTANT:** Mounting bases (MBs) and removable terminal bases (RTBs) do not ship with the FLEX 5000 I/O modules. You must purchase a MB and a RTB individually for each I/O module. 5094-MB plus 5094-RTB3IT (referred to in documentation as a non-orderable 5094-TB3IT) 5094-MB plus 5094-RTB3ITS (referred to in documentation as a non-orderable 5094-TB3ITS) 5094-MBXT plus 5094-RTB3ITXT (referred to in documentation as a non-orderable 5094-TB3ITXT) 5094-MBXT plus 5094-RTB3ITSXT (referred to in documentation as a non-orderable 5094-TB3ITSXT)
TB keying	**3 ⊘⊘ 4**
Wire category(1)	2 - signal ports 2 - power ports
Wire size - signal	0.34...2.5 mm^2 (22...14 AWG) solid or stranded copper wire that is rated at 105 °C (221 °F), or greater, 1.2 mm (3/64 in.) insulation, max Ferrule according to DIN 46 228/1.
Wire size - power	2.5 mm^2 (14 AWG) Cu multi-strand
Dimensions (HxWxD), approx	87.0 x 94.0 x 54.0 mm (3.43 x 3.7 x 2.13 in.)
Weight, approx	153.5 g (0.34 lb)
Enclosure type	None (open-style)
North American temp code	T4
UKEX/ATEX temp code	T4
IECEx temp code	T4

(1) Use this Conductor Category information for planning conductor routing. See the Industrial Automation Wiring and Grounding Guidelines, publication 1770-4.1.
Use this Conductor Category information for planning conductor routing as described in the appropriate System Level Installation Manual.

Environmental Specifications – 5094-IRT8S, 5094-IRT8SXT

Attribute	5094-IRT8S, 5094-IRT8SXT
Temperature, operating IEC 60068-2-1 (Test Ad, Operating Cold), IEC 60068-2-2 (Test Bd, Operating Dry Heat), IEC 60068-2-14 (Test Nb, Operating Thermal Shock)	-40 °C ≤Ta ≤ +70 °C (-40 °F ≤ Ta ≤ +158 °F)
Temperature, surrounding air, max	70 °C (158 °F)
Temperature, nonoperating IEC 60068-2-1 (Test Ab, Unpackaged Nonoperating Cold), IEC 60068-2-2 (Test Bb, Unpackaged Nonoperating Dry Heat), IEC 60068-2-14 (Test Na, Unpackaged Nonoperating Thermal Shock)	-40...+85 °C (-40...+185 °F)
Relative humidity IEC 60068-2-30 (Test Db, Unpackaged Damp Heat)	5...95% noncondensing
Vibration IEC 60068-2-6 (Test Fc, Operating)	5 g @ 10...500 Hz
Shock, operating IEC 60068-2-27 (Test Ea, Unpackaged Shock)	30 g
Shock, nonoperating IEC 60068-2-27 (Test Ea, Unpackaged Shock)	30 g
Emissions	IEC 61000-6-4
ESD immunity IEC 61000-4-2	6 kV contact discharges 8 kV air discharges
Radiated RF immunity IEC 61000-4-3	10V/m with 1 kHz sine wave 80% AM from 80...2000 MHz 10V/m with 200 Hz 50% pulse 100% AM @ 900 MHz 10V/m with 200 Hz 50% pulse 100% AM @ 1890 MHz 10V/m with 1 kHz sine wave 80% AM from 2000...2700 MHz 3V/m with 1 kHz sine wave 80% AM from 2000...6000 MHz
EFT/B immunity IEC 61000-4-4	±4 kV @ 5 kHz on power ports ±3 kV @ 5 kHz on signal ports
Surge transient immunity IEC 61000-4-5	±1 kV line-line (DM) and ±2 kV line-earth (CM) on power ports ±1 kV line-line (DM) and ±2 kV line-earth (CM) on signal ports
Conducted RF immunity IEC 61000-4-6	10V rms with 1 kHz sine wave 80% AM from 150 kHz...80 MHz
Corrosion resistance classification	5094-IRT8S – ISA S71.04 G2 5094-IRT8SXT – ISA S71.04 G3

Certifications – 5094-IRT8S, 5094-IRT8SXT

Certification[1]	5094-IRT8S, 5094-IRT8SXT
c-UL-us	UL Listed Industrial Control Equipment, certified for US and Canada. See UL File E322657. UL Listed for Class I, Division 2 Group A,B,C,D Hazardous Locations, certified for U.S. and Canada. See UL File E334470.
CE	European Union 2014/30/EU EMC Directive, compliant with: EN 61326-1; Meas./Control/Lab., Industrial Requirements EN 61000-6-2; Industrial Immunity EN 61000-6-4; Industrial Emissions EN 61131-2; Programmable Controllers (Clause 8, Zone A & B) European Union 2014/35/EU LVD, compliant with: EN 61010-2-201; Control Equipment Safety Requirements European Union 2006/42/EC MD, compliant with: EN ISO 13849-1; Safety-related parts of control system EN 62061; Functional safety of safety-related control systems European Union 2011/65/EU RoHS, compliant with: EN IEC 63000:2018; Technical documentation
RCM	Australian Radiocommunications Act, compliant with: EN 61000-6-4; Industrial Emissions
Ex	UK Statutory Instrument 2016 No. 1107 and European Union 2014/34/EU ATEX Directive, compliant with: EN IEC 60079-0; General Requirements EN IEC 60079-7; Explosive Atmospheres, Protection "e" II 3 G Ex ec IIC T4 Gc DEMKO 17 ATEX 1922X UL21UKEX2275X
IECEx	IECEx System, compliant with: IEC 60079-0; General Requirements IEC 60079-7; Explosive Atmospheres, Protection "e" Ex ec IIC T4 Gc IECEx UL 17.0075X
TÜV	TÜV Certified for Functional Safety: Up to and including Cat. 4 / PLe acc. to EN ISO 13849-1, SIL CL 3 acc. to EN 62061, SIL 3 acc. to IEC 61508[2]
KC	Korean Registration of Broadcasting and Communications Equipment, compliant with: Article 58-2 of Radio Waves Act, Clause 3
Morocco	Arrêté ministériel n° 6404-15 du 1 er muharram 1437 Arrêté ministériel n° 6404-15 du 29 ramadan 1436
EAC	Russian Customs Union TR CU 020/2011 EMC Technical Regulation Russian Customs Union TR CU 004/2011 LV Technical Regulation
CCC	CNCA-C23-01 强制性产品认证实施规则 防爆电气 CNCA-C23-01 CCC Implementation Rule Explosion-Proof Electrical Products
UKCA	2016 No. 1091 – Electromagnetic Compatibility Regulations 2016 No. 1101 – Electrical Equipment (Safety) Regulations 2016 No. 1107 – Equipment and Protective Systems Intended for Use in Potentially Explosive Atmospheres Regulations 2012 No. 3032 – Restriction of the Use of Certain Hazardous Substances in Electrical and Electronic Equipment Regulations

(1) When marked. See the Product Certifications website at rok.auto/certifications for declarations of conformity, certificates, and other certification details.
(2) When used as described in the GuardLogix 5580 and Compact GuardLogix 5380 Controller Systems Reference Manual, publication 1756-RM012, and the FLEX 5000 Analog I/O Modules User Manual, publication 5094-UM002, for Safety Application Suitability Levels and Safety Data for Safety I/O Modules

Safety Specialty I/O Module

I/O Type	Catalog Number	Description	Page
Safety frequency input	5094-IJ2IS, 5094-IJ2ISXT	Safety 2-channel frequency input modules	101

5094-IJ2IS and 5094-IJ2ISXT 2-channel Isolated Frequency Safety Input Modules

These figures show wiring diagrams for the 5094-IJ2IS and 5094-IJ2ISXT safety modules. You must connect a 24V DC power source to the left SA+/– terminals to provide field-side power.

IMPORTANT
- To ensure proper operation and high immunity to electrical noise, always use Belden 8761 (shielded, twisted-pair) or equivalent wire with shield connected to earth near the 5094 module.
- The 5094-STB shield bar accessory is required to wire the shields for the 5094-IJ2IS and 5094-IJ2ISXT modules using the 5094-TB3I or 5094-TB3IS terminal base assemblies. Catalog number 5094-STB is available separately.

This figure shows a wiring diagram for the 5094-IJ2IS and 5094-IJ2ISXT modules connected to a magnetic pickup sensor.

5094-IJ2IS and 5094-IJ2ISXT Wiring Diagram — Magnetic Pickup Sensor

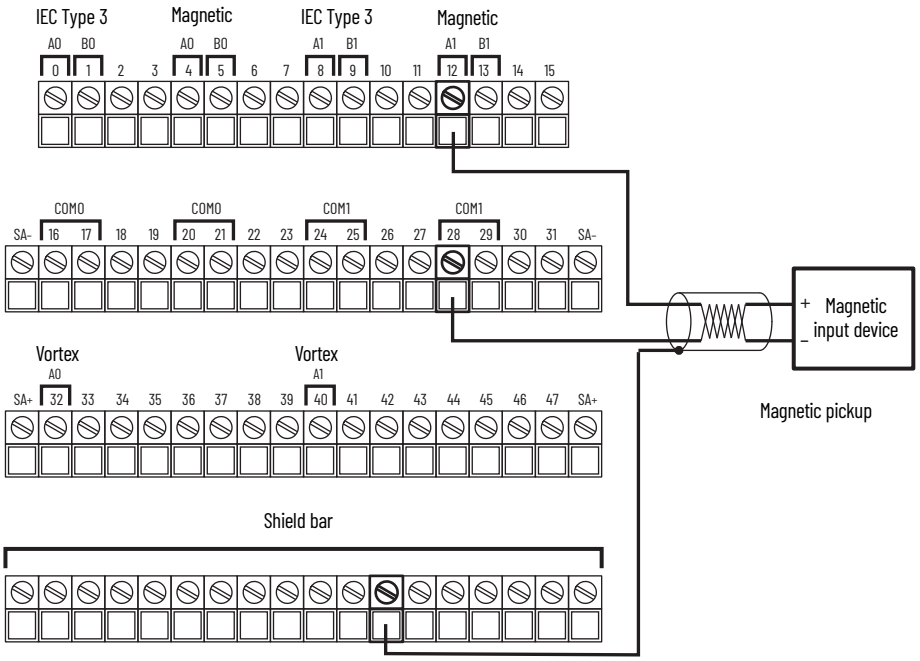

This figure shows a wiring diagram for the 5094-IJ2IS and 5094-IJ2ISXT modules connected to a vortex flowmeter.

5094-IJ2IS and 5094-IJ2ISXT Wiring Diagram — Vortex Flowmeter

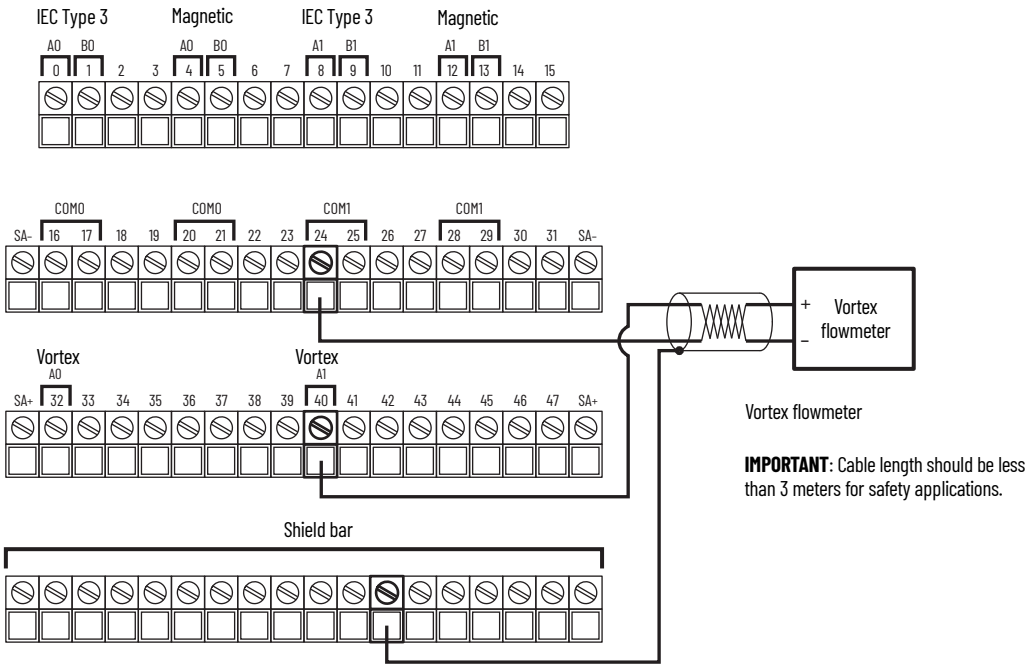

This figure shows a wiring diagram for the 5094-IJ2IS and 5094-IJ2ISXT modules connected to a 2-wire 24V DC IEC Type 3 input.

5094-IJ2IS and 5094-IJ2ISXT Wiring Diagram — 2-wire 24V DC IEC TYPE 3 Input

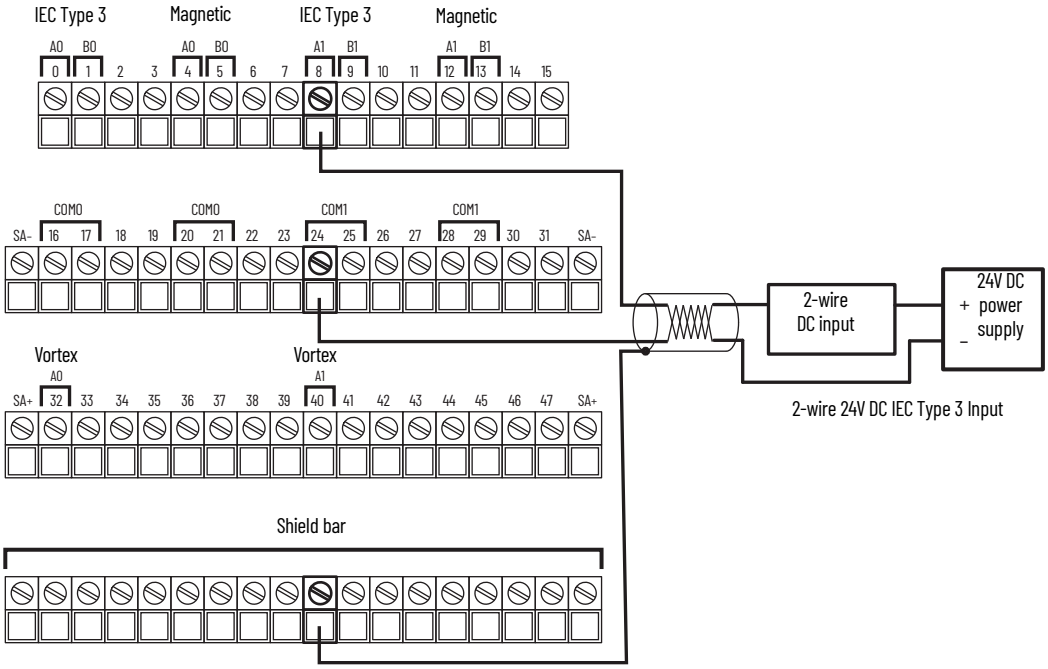

This figure shows a wiring diagram for the 5094-IJ2IS and 5094-IJ2ISXT modules connected to 4-wire 24V DC IEC Type 3 input and 3-wire 24V DC IEC TYPE 3 input.

5094-IJ2IS and 5094-IJ2ISXT Wiring Diagram — 4-wire 24V DC IEC Type 3 Input/ 3-wire 24V DC IEC TYPE 3 Input

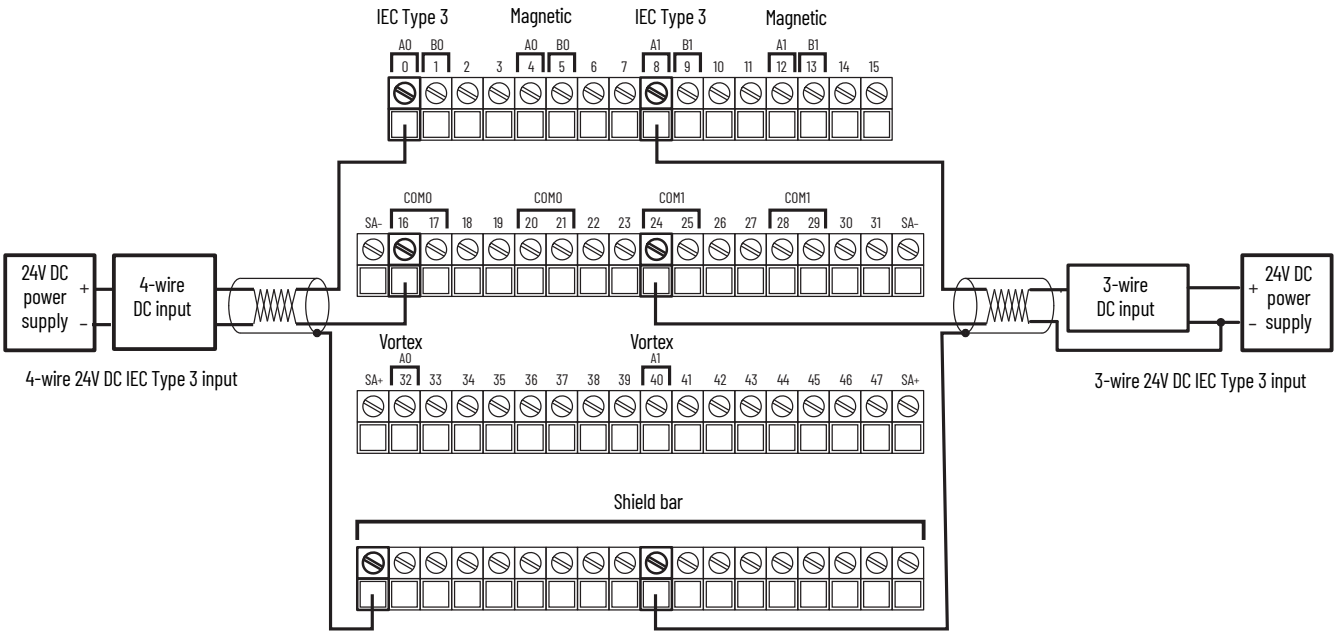

Wiring Connections for 5094-IJ2IS and 5094-IJ2ISXT

Types of Inputs	Channel 0 Terminals		Channel 1 Terminals		VDC Common	+VDC Power	Shield (Ground)
	Input	COM	Input	COM			
A (Frequency Input)					SA-	SA+	The shield bar accessory is available separately.
24V DC IEC Type 3	0	16, 17, 20, 21	8	24, 25, 28, 29			
Magnetic Pickup	4	16, 17, 20, 21	12	24, 25, 28, 29			
Vortex Flowmeter	32	16, 17, 20, 21	40	24, 25, 28, 29			
B (Gate Input)							
24V DC IEC Type 3	1	16, 17, 20, 21	9	24, 25, 28, 29			
Magnetic Pickup	5	16, 17, 20, 21	13	24, 25, 28, 29			

This figure shows a functional block diagram for the 5094-IJ2IS and 5094-IJ2ISXT safety modules.

5094-IJ2IS and 5094-IJ2ISXT Functional Block Diagram

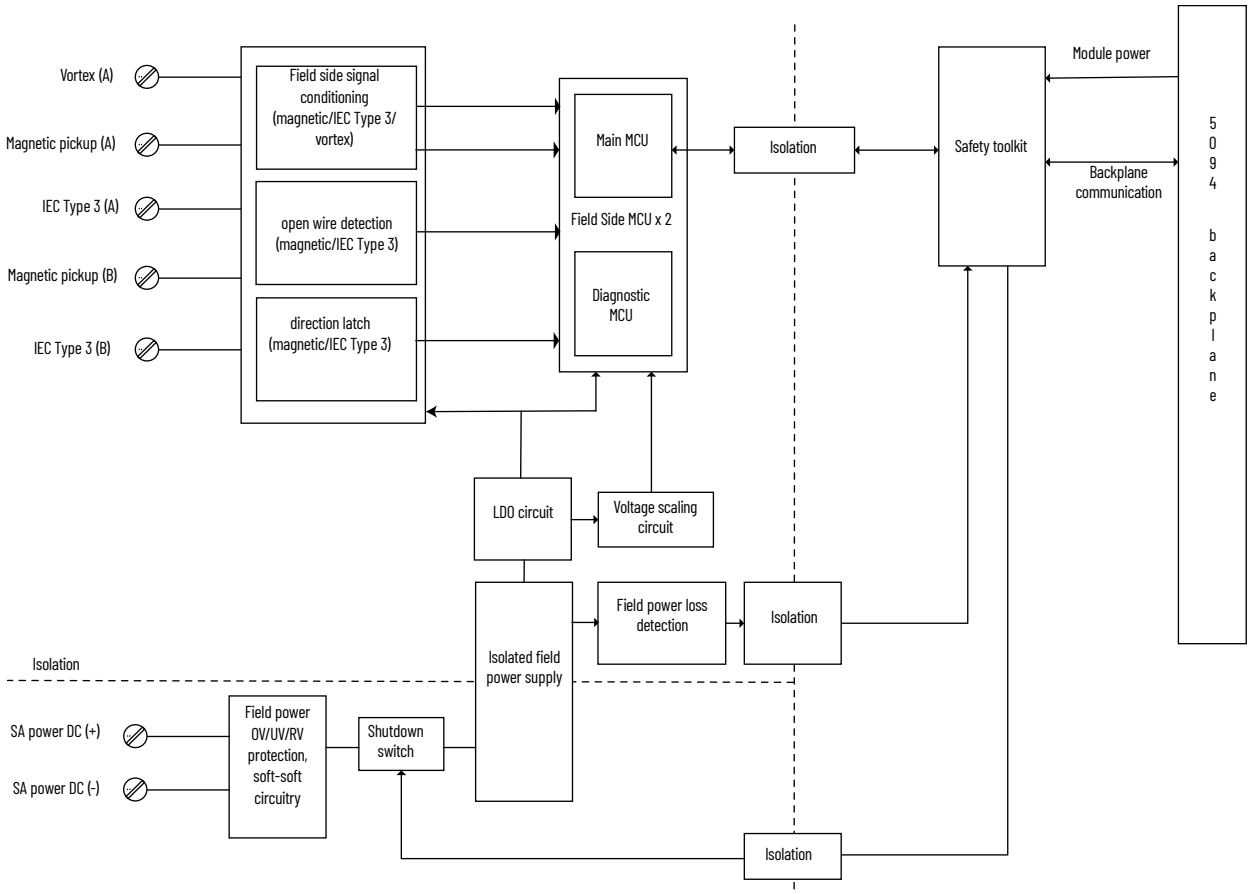

Technical Specifications - 5094-IJ2IS, 5094-IJ2ISXT

Attribute	5094-IJ2IS, 5094-IJ2ISXT
Number of input channels	2 Isolated safety frequency inputs
Number of inputs per channel	2 – A (Frequency) and B (Gate) Note: B (Gate) is used to establish direction
Direction	Forward, Reverse
On-state voltage, min	11V DC for 24V IEC Type 3 Input
On-state voltage, nom	24V DC for 24V IEC Type 3 Input
On-state voltage, max	32V DC for 24V IEC Type 3 Input 28.8V AC Peak for Magnetic Pickup 32V DC for Vortex Flowmeter
On-state current, min	2.5 mA for 24V IEC Type 3 Input
On-state current, nom	5.5 mA for 24V IEC Type 3 Input
On-state current, max	8 mA for 24V IEC Type 3 Input
Off-state voltage, max	5.0V DC for 24V DC IEC Type 3 Input
Off-state current, max	1.5 mA for 24V DC IEC Type 3 Input
Wire-off detection	For IEC Type 3 Input and Magnetic Input
On-state threshold voltage, nom (selected by terminal base DC/AC connections and user configuration software / profile)	50 mV, 75 mV, 100 mV, 150 mV, 250 mV, and 500 mV - Magnetic Pickup 3V – Vortex Flowmeter 6V – Vortex Flowmeter 11V DC - 24V DC IEC Type 3 Input
Input frequency, max	50 kHz sine wave for Magnetic Pickup 50 kHz Square wave input for 24V IEC Type 3 input and Vortex Flowmeter
Input frequency, min	1 Hz (IEC Type 3, Vortex Flowmeter) 50 Hz (Magnetic Pickup) typical
Input filtering	Selectable, Time Constant in ms, first order lag
Resolution	Resolution: better than 0.01 Hz

Technical Specifications – 5094-IJ2IS, 5094-IJ2ISXT (Continued)

Attribute	5094-IJ2IS, 5094-IJ2ISXT
Frequency input impedance	> 5 kΩ for Magnetic Pickup > 10 kΩ for Vortex Flowmeter > 2.5 kΩ for 24V DC IEC Type 3 Input
Gate input impedance	> 5 kΩ for Magnetic Pickup > 2.5 kΩ for 24V DC IEC Type 3 Input
Safety Integrity Level	Up to and including Cat. 4 / PLe acc. to EN ISO 13849-1, SIL CL 3 acc. to EN 62061, SIL 3 acc. to IEC 61508.(1)
Safety Reaction Time (SRT)	10 ms @ RPI of 2 ms and @SampleTime 2 ms and @frequency ≥ 1 KHz
Minimum RPI	2 ms
Open wire detection diagnostics	Yes, IEC Type 3 Input and Magnetic Pickup; User configurable
Module over-temperature detection	Yes
Overvoltage protection, max	±32V DC
SA supply reverse voltage protection	Yes
SA supply overvoltage protection, max	60V
CIP Sync	Yes

(1) See the FLEX 5000 I/O Standard and Safety Frequency Input Modules User Manual publication 5094-UM004, for Safety Application Suitability Levels and Safety Data for Safety I/O Modules modules. The specific level of current passed through varies based on system configuration.

General Specifications – 5094-IJ2IS, 5094-IJ2ISXT

Attribute	5094-IJ2IS, 5094-IJ2ISXT
Backplane Power (BP) voltage	15V DC
Backplane Power (BP) current, max	50 mA
Sensor Actuator Power (SA) voltage range	18...32V DC
Sensor Actuator Power (SA) current, max	65 mA
Power dissipation, max	3 W
Thermal dissipation, max	10.23 BTU/hr
Isolation voltage	250V (continuous), Basic Insulation between channels 250V (continuous), Basic Insulation between system and field 250V (continuous), Basic Insulation between SA power and Inputs
Module keying	Mechanical keying or electronic keying via programming software.
Indicators	1 green/red module status indicator 1 green/red SA power status indicator 2 yellow/red I/O status indicator for each channel – A (Frequency) and B (Gate)
Terminal base (TB) assembly	**IMPORTANT:** Mounting bases (MBs) and removable terminal bases (RTBs) do not ship with the FLEX 5000 I/O modules. You must purchase a MB and a RTB individually for each I/O module. 5094-MB plus 5094-RTB3I (referred to in documentation as a non-orderable 5094-TB3I) 5094-MB plus 5094-RTB3IS (referred to in documentation as a non-orderable 5094-TB3IS) 5094-MBXT plus 5094-RTB3IXT (referred to in documentation as a non-orderable 5094-TB3IXT) 5094-MBXT plus 5094-RTB3ISXT (referred to in documentation as a non-orderable 5094-TB3ISXT)
TB keying	1 Ⓣ Ⓐ 5
Wire category(1)	2 - signal ports 2 - power ports
Wire size - signal	0.34...2.5 mm^2 (22...14 AWG) solid or stranded copper wire that is rated at 105 °C (221 °F), or greater, 1.2 mm (3/64 in.) insulation, max Ferrule according to DIN 46 228/1.
Wire size - power	2.5 mm^2 (14 AWG) Cu multi-strand
Dimensions (HxWxD), approx	87.0 x 94.0 x 54.0 mm (3.43 x 3.7 x 2.13 in.)
Weight, approx	120 g (0.26 lb)
Enclosure type	None (open-style)
North American temp code	T4
UKEX/ATEX temp code	T4
IECEx temp code	T4

(1) Use this Conductor Category information for planning conductor routing. See the Industrial Automation Wiring and Grounding Guidelines, publication 1770-4.1.
Use this Conductor Category information for planning conductor routing as described in the appropriate System Level Installation Manual.

Environmental Specifications – 5094-IJ2IS, 5094-IJ2ISXT

Attribute	5094-IJ2IS, 5094-IJ2ISXT
Temperature, operating IEC 60068-2-1 (Test Ad, Operating Cold), IEC 60068-2-2 (Test Bd, Operating Dry Heat), IEC 60068-2-14 (Test Nb, Operating Thermal Shock)	-40 °C ≤ Ta ≤ +70 °C (-40 °F ≤ Ta ≤ +158 °F)
Temperature, surrounding air, max	70 °C (158 °F)
Temperature, nonoperating IEC 60068-2-1 (Test Ab, Unpackaged Nonoperating Cold), IEC 60068-2-2 (Test Bb, Unpackaged Nonoperating Dry Heat), IEC 60068-2-14 (Test Na, Unpackaged Nonoperating Thermal Shock)	-40...+85 °C (-40...+185 °F)
Relative humidity IEC 60068-2-30 (Test Db, Unpackaged Damp Heat)	5...95% noncondensing
Vibration IEC 60068-2-6 (Test Fc, Operating)	5 g @ 10...500 Hz
Shock, operating IEC 60068-2-27 (Test Ea, Unpackaged Shock)	30 g
Shock, nonoperating IEC 60068-2-27 (Test Ea, Unpackaged Shock)	30 g
Emissions	IEC 61000-6-4
ESD immunity IEC 61000-4-2	6 kV contact discharges 8 kV air discharges
Radiated RF immunity IEC 61000-4-3	10V/m with 1 kHz sine wave 80% AM from 80...2000 MHz 10V/m with 200 Hz 50% pulse 100% AM @ 900 MHz 10V/m with 200 Hz 50% pulse 100% AM @ 1890 MHz 10V/m with 1 kHz sine wave 80% AM from 2000...2700 MHz 3V/m with 1 kHz sine wave 80% AM from 2000...6000 MHz
EFT/B immunity IEC 61000-4-4	±4 kV @ 5 kHz on power ports ±3 kV @ 5 kHz on signal ports (Magnetic Pickup) ±2.5 kV @ 5 kHz on signal ports (IEC Type 3 Input) ±3 kV @ 5 kHz on signal ports (Vortex Flowmeter) for non-safety application
Surge transient immunity IEC 61000-4-5	±1 kV line-line (DM) and ±2 kV line-earth (CM) on power ports ±1 kV line-line (DM) and ±2 kV line-earth (CM) on signal ports
Conducted RF immunity IEC 61000-4-6	10V rms with 1 kHz sine wave 80% AM from 150 kHz...80 MHz
Corrosion resistance classification	5094-IJ2IS – ISA S71.04 G2 5094-IJ2ISXT – ISA S71.04 G3

Certifications – 5094-IJ2IS, 5094-IJ2ISXT

Certification[1]	5094-IJ2IS, 5094-IJ2ISXT
c-UL-us	UL Listed Industrial Control Equipment, certified for US and Canada. See UL File E322657. UL Listed for Class I, Division 2 Group A,B,C,D Hazardous Locations, certified for U.S. and Canada. See UL File E334470.
CE	European Union 2014/30/EU EMC Directive, compliant with: EN 61326-1; Meas./Control/Lab., Industrial Requirements EN 61000-6-2; Industrial Immunity EN 61000-6-4; Industrial Emissions EN 61131-2; Programmable Controllers (Clause 8, Zone A & B) European Union 2014/35/EU LVD, compliant with: EN 61010-2-201; Control Equipment Safety Requirements European Union 2006/42/EC MD, compliant with: EN ISO 13849-1; Safety-related parts of control system EN 62061; Functional safety of safety-related control systems European Union 2011/65/EU RoHS, compliant with: EN IEC 63000:2018; Technical documentation
RCM	Australian Radiocommunications Act, compliant with: EN 61000-6-4; Industrial Emissions
Ex	UK Statutory Instrument 2016 No. 1107 and European Union 2014/34/EU ATEX Directive, compliant with: EN IEC 60079-0; General Requirements EN IEC 60079-7; Explosive Atmospheres, Protection "e" II 3 G Ex ec IIC T4 Gc DEMKO 17 ATEX 1922X UL21UKEX2275X
IECEx	IECEx System, compliant with: IEC 60079-0; General Requirements IEC 60079-7; Explosive Atmospheres, Protection "e" Ex ec IIC T4 Gc IECEx UL 17.0075X
TÜV	TÜV Certified for Functional Safety: Up to and including Cat. 4 / PLe acc. to EN ISO 13849-1, SIL CL 3 acc. to EN 62061, SIL 3 acc. to IEC 61508[2]
KC	Korean Registration of Broadcasting and Communications Equipment, compliant with: Article 58-2 of Radio Waves Act, Clause 3

Certifications - 5094-IJ2IS, 5094-IJ2ISXT (Continued)

Certification[1]	5094-IJ2IS, 5094-IJ2ISXT
Morocco	Arrêté ministériel n° 6404-15 du 1 er muharram 1437 Arrêté ministériel n° 6404-15 du 29 ramadan 1436
EAC	Russian Customs Union TR CU 020/2011 EMC Technical Regulation Russian Customs Union TR CU 004/2011 LV Technical Regulation
CCC	CNCA-C23-01 强制性产品认证实施规则 防爆电气 CNCA-C23-01 CCC Implementation Rule Explosion-Proof Electrical Products
UKCA	2016 No. 1091 – Electromagnetic Compatibility Regulations 2016 No. 1101 – Electrical Equipment (Safety) Regulations 2016 No. 1107 – Equipment and Protective Systems Intended for Use in Potentially Explosive Atmospheres Regulations 2012 No. 3032 – Restriction of the Use of Certain Hazardous Substances in Electrical and Electronic Equipment Regulations

(1) When marked. See the Product Certifications website at rok.auto/certifications for declarations of conformity, certificates, and other certification details.
(2) When used as described in the GuardLogix 5580 and Compact GuardLogix 5380 Controller Systems Reference Manual, publication 1756-RM012, and the FLEX 5000 I/O Standard and Safety Frequency Input Modules User Manual, publication 5094-UM004, for Safety Application Suitability Levels and Safety Data for Safety I/O Modules.

EtherNet/IP Adapters

Type	Catalog Number	Page
EtherNet/IP adapters with RJ45 ports	5094-AENTR, 5094-AENTRXT, 5094-AEN2TR, 5094-AEN2TRXT	108
EtherNet/IP adapters with SFP support	5094-AENSFPR, 5094-AENSFPRXT, 5094-AEN2SFPR, 5094-AEN2SFPRXT	109

Environmental specifications and certifications for FLEX 5000 EtherNet/IP adapters are provided on page 110.

FLEX 5000 EtherNet/IP Adapters with RJ45 Ports (5094-AENTR, 5094-AENTRXT, 5094-AEN2TR, 5094-AEN2TRXT)

This figure shows a wiring diagram for how to connect power to the FLEX 5000 EtherNet/IP adapter.

5094-AENTR and 5094-AENTRXT Wiring Diagram – MOD Power (DC)

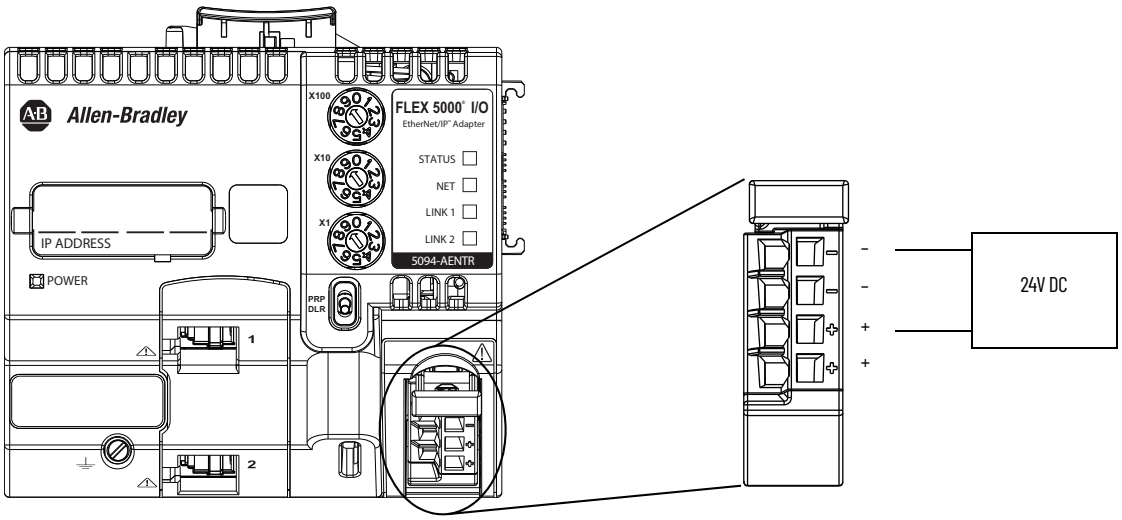

Technical Specifications - 5094-AENTR, 5094-AENTRXT, 5094-AEN2TR, 5094-AEN2TRXT

Attribute	5094-AENTR, 5094-AENTRXT	5094-AEN2TR, 5094-AEN2TRXT
Voltage and current ratings, MP	18...32V DC, 1250 mA	18...32V DC, 1880 mA
Voltage and current ratings, MP inrush	18...32V DC, 3200 mA for 100 ms	18...32V DC, 5700 mA for 100 ms
Voltage and current ratings, backplane	15V DC, 1130 mA	15V DC, 1800 mA
Recommended external overcurrent protection	MOD power: 10...12A @ 22.5...43.2 A2t, Fast Acting SA power: 20 A @ 250V AC	
Power dissipation, max	5.1 W @ 18V DC	6.2 W @ 18V DC
Thermal dissipation, max	17.4 BTU/hr @ 24V DC	21.1 BTU/hr @ 24V DC
Isolation voltage	300V (continuous), Basic Insulation Type Tested @ 2121V AC for 60 s, Power to Backplane and Backplane to Ethernet Tested @ 4242V DC for 60 s, Power to Ethernet ports No isolation between Ethernet ports	
DIN rail	Compatible zinc-plated, chromate-passivated steel DIN rail. EN60715 - 35 x 7.5 mm (1.38 x 0.30 in.)	
Removable terminal block (RTB)	Your adapter comes with a screw-type RTB. You can order screw-type or spring-type RTBs separately: 5094-AENRTB-QTY5 – Ethernet Adapter RTB, Screw-type, Pack of 5 5094-AENRTBS-QTY5 – Ethernet Adapter RTB, Spring-type, Pack of 5	
Terminal block torque, power RTB	Screw-type RTB: 0.4 N•m (3.5 lb•in) Spring-type RTB: Not applicable	
Terminal block torque, functional earth terminal	0.5 N•m (4.4 lb•in)	
Wiring category(1), (2)	1 - on power ports 1 - on Ethernet ports	
Wire type	Copper	
Wire size, power RTB	0.34...2.5 mm^2 (22...14 AWG) solid or stranded copper wire that is rated at 105 °C (221 °F), or greater, 1.2 mm (3/64 in.) insulation, max, single wire connection only. Ferrule according to DIN 46 228/1.	

Technical Specifications - 5094-AENTR, 5094-AENTRXT, 5094-AEN2TR, 5094-AEN2TRXT (Continued)

Attribute	5094-AENTR, 5094-AENTRXT	5094-AEN2TR, 5094-AEN2TRXT
Wire size, functional earth terminal	2.5 mm^2 (14 AWG) solid or stranded copper wire that is rated at 105 °C (221 °F), or greater, 3.5 mm (0.14 in.) max diameter including insulation, single wire connection only.	
Insulation-stripping length, power RTB	Screw-type RTB connections: 0.34...2.5 mm^2 (22...14 AWG) = 12 ± 1 mm (0.47 in ± 0.04 in.) Spring-type RTB connections: 0.34...1.5 mm^2 (22...16 AWG) = 10 ± 1 mm (0.39 in ± 0.04 in.) 2.5 mm^2 (14 AWG) = 15 ± 1 mm (0.59 in ± 0.04 in.)	
Insulation-stripping length, functional earth terminal	8 mm (0.31 in.)	
Dimensions (HxWxD), approx	92.7 x 94.0 x 96.5 mm (3.65 x 3.70 x 3.80 in.)	
Weight, approx	400 g (0.88 lb)	
Enclosure type rating	None (open-style)	
North American temp code	T4	
UKEX/ATEX temp code	T4	
IECEx temp code	T4	

(1) Use this Conductor Category information for planning conductor routing. See the Industrial Automation Wiring and Grounding Guidelines, publication 1770-4.1.
(2) Use this Conductor Category information for planning conductor routing as described in the appropriate System Level Installation Manual.

FLEX 5000 EtherNet/IP Adapters with SFP Support (5094-AENSFPR, 5094-AENSFPRXT, 5094-AEN2SFPR, 5094-AEN2SFPRXT)

This figure shows a wiring diagram for how to connect power to the FLEX 5000 EtherNet/IP adapter.

5094-AEN2SFPR and 5094-AEN2SFPRXT Wiring Diagram – MOD Power (DC)

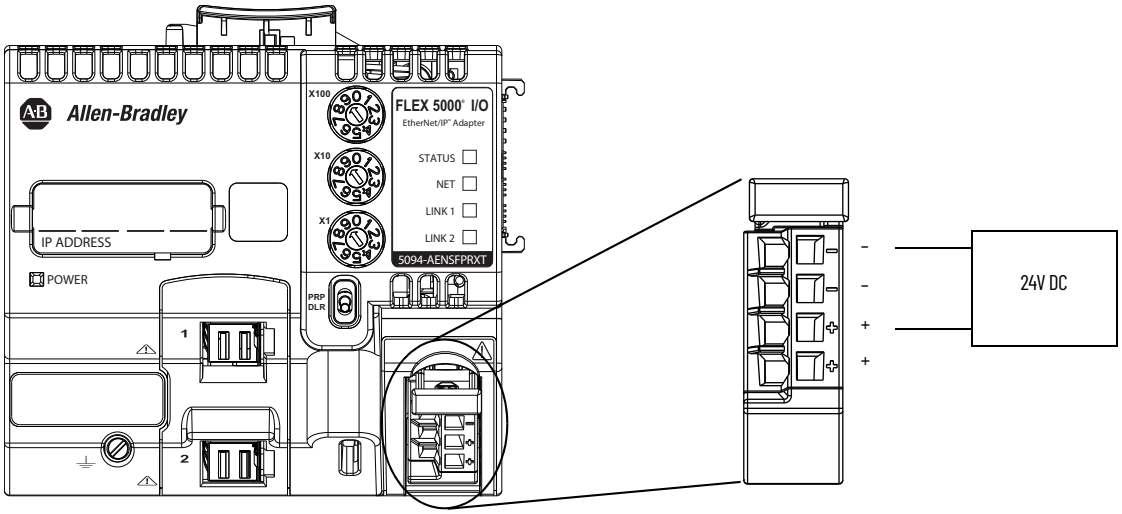

Technical Specifications - 5094-AENSFPR, 5094-AENSFPRXT, 5094-AEN2SFPR, 5094-AEN2SFPRXT

Attribute	5094-AENSFPR, 5094-AENSFPRXT	5094-AEN2SFPR, 5094-AEN2SFPRXT
Voltage and current ratings, MP	18...32V DC, 1250 mA	18...32V DC, 1880 mA
Voltage and current ratings, MP inrush	18...32V DC, 3200 mA for 100 ms	18...32V DC, 5700 mA for 100 ms
Voltage and current ratings, backplane	15V DC, 1060 mA	15V DC, 1730 mA
Recommended external overcurrent protection	MOD power: 10...12A @ 22.5...43.2 A2t, Fast Acting SA power: 20 A @ 250V AC	
Power dissipation, max	5.8 W @ 18V DC	7 W @ 18V DC
Thermal dissipation, max	19.8 BTU/hr @ 24V DC	23.9 BTU/hr @ 24V DC
Isolation voltage	300V (continuous), Basic Insulation Type Tested @ 2121V AC for 60 s, Power to Backplane Tested @ 4242V DC for 60 s, Power to Ethernet ports No isolation between communication ports	
DIN rail	Compatible zinc-plated, chromate-passivated steel DIN rail. EN60715 - 35 x 7.5 mm (1.38 x 0.30 in.)	

Technical Specifications - 5094-AENSFPR, 5094-AENSFPRXT, 5094-AEN2SFPR, 5094-AEN2SFPRXT (Continued)

Attribute	5094-AENSFPR, 5094-AENSFPRXT	5094-AEN2SFPR, 5094-AEN2SFPRXT
Removable terminal block (RTB)	Your adapter comes with a screw-type RTB. You can order screw-type or spring-type RTBs separately: 5094-AENRTB-QTY5 – Ethernet Adapter RTB, Screw-type, Pack of 5 5094-AENRTBS-QTY5 – Ethernet Adapter RTB, Spring-type, Pack of 5	
Terminal block torque, power RTB	Screw-type RTB: 0.4 N•m (3.5 lb•in) Spring-type RTB: Not applicable	
Terminal block torque, functional earth terminal	0.5 N•m (4.4 lb•in)	
Wiring category(1), (2)	1 - on power ports 1 - on Ethernet slots	
Wire type	Copper	
Wire size, power RTB	0.34...2.5 mm^2 (22...14 AWG) solid or stranded copper wire that is rated at 105 °C (221 °F), or greater, 1.2 mm (3/64 in.) insulation, max, single wire connection only. Ferrule according to DIN 46 228/1.	
Wire size, functional earth terminal	2.5 mm^2 (14 AWG) solid or stranded copper wire that is rated at 105 °C (221 °F), or greater, 3.5 mm (0.14 in.) max diameter including insulation, single wire connection only.	
Insulation-stripping length, power RTB	Screw-type RTB connections: 0.34...2.5 mm^2 (22...14 AWG) = 12 ± 1 mm (0.47 in ± 0.04 in.) Spring-type RTB connections: 0.34...1.5 mm^2 (22...16 AWG) = 10 ± 1 mm (0.39 in ± 0.04 in.) 2.5 mm^2 (14 AWG) = 15 ± 1 mm (0.59 in ± 0.04 in.)	
Insulation-stripping length, functional earth terminal	8 mm (0.31 in.)	
SFP slots	3.3V, 1 W	
Optical power output	0.3 W/m^2	
Compatible SFP modules(3)	1783-SFP100FX 1783-SFP100LX 11783-SFP100EXC 783-SFP1GSX 1783-SFP1GLX 1783-SFP1GEXE 1783-SFP100ZXC 1783-SFP1GZX 1783-SFP1GTE	
Dimensions (HxWxD), approx	92.7 x 94.0 x 96.5 mm (3.65 x 3.70 x 3.80 in.)	
Weight, approx	400 g (0.88 lb)	
Enclosure type rating	None (open-style)	
North American temp code	T4	
UKEX/ATEX temp code	T4	
IECEx temp code	T4	

(1) Use this Conductor Category information for planning conductor routing. See the Industrial Automation Wiring and Grounding Guidelines, publication 1770-4.1.
(2) Use this Conductor Category information for planning conductor routing as described in the appropriate System Level Installation Manual.
(3) You must purchase SFP modules separately. For SFP module specifications, See the Stratix® Ethernet Device Specifications Technical Data, publication 1783-TD001.

Environmental Specifications and Certifications

The following tables provide the environmental specifications and certifications for the FLEX 5000 EtherNet/IP adapters.

Environmental Specifications - FLEX 5000 EtherNet/IP Adapters

Attribute	5094-AENTR, 5094-AENTRXT, 5094-AEN2TR, 5094-AEN2TRXT, 5094-AENSFPR, 5094-AENSFPRXT, 5094-AEN2SFPR, 5094-AEN2SFPRXT
Temperature, operating IEC 60068-2-1 (Test Ab, Operating Cold), IEC 60068-2-2 (TestBb, Unpackaged Nonoperating Dry Heat), IEC 60068-2-14 (Test Na, Operating Thermal Shock)	-40 °C ≤ Ta ≤ +70 °C (-40 °F ≤ Ta ≤ +158 °F)
Temperature, surrounding air, max	70 °C (158 °F)
Temperature, nonoperating IEC 60068-2-1 (Test Ab, Unpackaged Nonoperating Cold), IEC 60068-2-2 (Test Bb, Unpackaged Nonoperating Dry Heat), IEC 60068-2-14 (Test Na, Unpackaged Nonoperating Thermal Shock)	-40...+85 °C (-40...+185 °F)
Relative humidity IEC 60068-2-30 (Test Db, Unpackaged Damp Heat)	5...95% noncondensing
Vibration IEC 60068-2-6 (Test Fc, Operating)	5 g @ 10...500 Hz
Shock, operating IEC 60068-2-27 (Test Ea, Unpackaged Shock)	30 g

Environmental Specifications - FLEX 5000 EtherNet/IP Adapters (Continued)

Attribute	5094-AENTR, 5094-AENTRXT, 5094-AEN2TR, 5094-AEN2TRXT, 5094-AENSFPR, 5094-AENSFPRXT, 5094-AEN2SFPR, 5094-AEN2SFPRXT
Shock, nonoperating IEC 60068-2-27 (Test Ea, Unpackaged Shock)	30 g
Emissions	IEC 61000-6-4
ESD immunity IEC61000-4-2	6 kV contact discharges 8 kV air discharges
Radiated RF immunity IEC61000-4-3	10V/m with 1 kHz sine wave 80% AM from 80...6000 MHz
EFT/B immunity IEC 61000-4-4	±4 kV @ 5 kHz on power ports ±4 kV @ 5 kHz on Ethernet ports – **For 5094-AENTR, 5094-AENTRXT, 5094-AEN2TR, 5094-AEN2TRXT only**
Surge transient immunity IEC 61000-4-5	±2 kV line-line (DM) and ±4 kV line-earth (CM) on power ports ±2 kV line-earth (CM) on Ethernet ports – **For 5094-AENTR, 5094-AENTRXT, 5094-AEN2TR, 5094-AEN2TRXT only**
Conducted RF immunity IEC 61000-4-6	10V rms with 1 kHz sine wave 80% AM from 150 kHz...80 MHz
Corrosion resistance classification	ISA S71.04 G2 – **Non-XT catalogs** ISA S71.04 G3 – **XT catalogs**
Voltage variation IEC61000-4-29	10 ms interruption on DC supply ports

Certifications - FLEX 5000 EtherNet/IP Adapters

Certifications(1)	5094-AENTR, 5094-AENTRXT, 5094-AEN2TR, 5094-AEN2TRXT, 5094-AENSFPR, 5094-AENSFPRXT, 5094-AEN2SFPR, 5094-AEN2SFPRXT
c-UL-us	UL Listed Industrial Control Equipment, certified for US and Canada. See UL File E322657. UL Listed for Class I, Division 2 Group A,B,C,D Hazardous Locations, certified for U.S. and Canada. See UL File E334470.
CE	European Union 2014/30/EU EMC Directive, compliant with: EN 61326-1; Meas./Control/Lab., Industrial Requirements EN 61000-6-2; Industrial Immunity EN 61000-6-4; Industrial Emissions EN 61131-2; Programmable Controllers (Clause 8, Zone A & B) European Union 2014/35/EU LVD, compliant with: EN 61010-2-201; Control Equipment Safety Requirements European Union 2011/65/EU RoHS, compliant with: EN 63000; Technical documentation
RCM	Australian Radiocommunications Act, compliant with: EN 61000-6-4; Industrial Emissions
Ex	UK Statutory Instrument 2016 No. 1107 and European Union 2014/34/EU ATEX Directive, compliant with: EN IEC 60079-0; General Requirements EN IEC 60079-7; Explosive Atmospheres, Protection "e" II 3 G Ex ec IIC T4 Gc DEMKO 17 ATEX 1898X UL22UKEX2654X
IECEx	IECEx System, compliant with: IEC 60079-0; General Requirements IEC 60079-7; Explosive Atmospheres, Protection "e" Ex ec IIC T4 Gc IECEx UL 17.0047X
KC	Korean Registration of Broadcasting and Communications Equipment, compliant with: Article 58-2 of Radio Waves Act, Clause 3
Morocco	Arrêté ministériel n° 6404-15 du 1 er muharram 1437 Arrêté ministériel n° 6404-15 du 29 ramadan 1436
EAC	Russian Customs Union TR CU 020/2011 EMC Technical Regulation Russian Customs Union TR CU 004/2011 LV Technical Regulation
CCC	CNCA-C23-01 强制性产品认证实施规则 防爆电气 CNCA-C23-01 CCC Implementation Rule Explosion-Proof Electrical Products
UKCA	2016 No. 1091 – Electromagnetic Compatibility Regulations 2016 No. 1101 – Electrical Equipment (Safety) Regulations 2016 No. 1107 – Equipment and Protective Systems Intended for Use in Potentially Explosive Atmospheres Regulations 2012 No. 3032 – Restriction of the Use of Certain Hazardous Substances in Electrical and Electronic Equipment Regulations
EtherNet/IP	ODVA conformance tested to EtherNet/IP specifications

(1) When marked. See the Product Certifications website at rok.auto/certifications for declarations of conformity, certificates, and other certification details.

Terminal Base Assemblies

The I/O modules require a terminal base (TB) assembly to connect field-side wiring. TBs consist of a mounting base (MB) and removable terminal block (RTB). TBs are not available for order individually. You must order MBs and RTBs separately to assemble the TBs required for your system. RTBs with "S" (for example, RTB3TS) are spring-type. RTBs without "S" (for example, RTB3T) are screw-type.

Type	Catalog Number	Page
Mounting bases	5094-MB, 5094-MBXT	113
Terminal blocks	5094-RTB3, 5094-RTB3XT, 5094-RTB3S, 5094-RTB3SXT	114
CJC terminal blocks	5094-RTB3T, 5094-RTB3TXT, 5094-RTB3TS, 5094-RTB3TSXT	115
Relay terminal blocks	5094-RTB3W, 5094-RTB3WXT, 5094-RTB3WS, 5094-RTB3WSXT	116
Isolated terminal blocks	5094-RTB3I, 5094-RTB3IXT, 5094-RTB3IS, 5094-RTB3ISXT	117
Isolated CJC terminal blocks	5094-RTB3IT, 5094-RTB3ITXT, 5094-RTB3ITS, 5094-RTB3ITSXT	118
32-point terminal blocks	5094-RTB32V, 5094-RTB32VXT, 5094-RTB32VS, 5094-RTB32VSXT	119
	5094-RTB32C, 5094-RTB32CXT, 5094-RTB32CS, 5094-RTB32CSXT	120
AC terminal blocks	5094-RTB3AC, 5094-RTB3ACXT, 5094-RTB3ACS, 5094-RTB3ACSXT	121

Environmental specifications and certifications for FLEX 5000 terminal base assemblies are provided on page 122.

FLEX 5000 Modules and Terminal Bases Compatibility

Non-extreme Environment (non-XT)		
Modules	**Removable Terminal Blocks (RTB)**	**Mounting Base (MB)**
5094-IB16	5094-RTB3 / 5094-RTB3S	5094-MB
5094-OB8		
5094-OB16		
5094-IF8		
5094-OF8		
5094-HSC		
5094-OW8I	5094-RTB3W / 5094-RTB3WS	
5094-OW4IS		
5094-IY8	5094-RTB3T / 5094-RTB3TS	
5094-IB16S	5094-RTB3I / 5094-RTB3IS	
5094-OB16S		
5094-IF8IH		
5094-IF4IHS		
5094-OF8IH		
5094-OF4IHS		
5094-IJ2I		
5094-IJ2IS		
5094-SERIAL		
5094-IB32	5094-RTB32V / 5094-RTB32VS	
5094-OB32	5094-RTB32C / 5094-RTB32CS	
5094-IA16	5094-RTB3AC / 5094-RTB3ACS	
5094-IM8		
5094-OA16		
5094-IRT8S	5094-RTB3IT / 5094-RTB3ITS	

Extreme Environment (XT)		
Modules	**Removable Terminal Blocks (RTB)**	**Mounting Base (MB)**
5094-IB16XT	5094-RTB3XT / 5094-RTB3SXT	5094-MBXT
5094-OB8XT		
5094-OB16XT		
5094-IF8XT		
5094-OF8XT		
5094-HSCXT		
5094-OW8IXT	5094-RTB3WXT / 5094-RTB3WSXT	
5094-OW4ISXT		
5094-IY8XT	5094-RTB3TXT / 5094-RTB3TSXT	
5094-IB16SXT	5094-RTB3IXT / 5094-RTB3ISXT	
5094-OB16SXT		
5094-IF8IHXT		
5094-IF4IHSXT		
5094-OF8IHXT		
5094-OF4IHSXT		
5094-IJ2IXT		
5094-IJ2ISXT		
5094-SERIALXT		
5094-IB32XT	5094-RTB32VXT / 5094-RTB32VSXT	
5094-OB32XT	5094-RTB32CXT / 5094-RTB32CSXT	
5094-IA16XT	5094-RTB3ACXT / 5094-RTB3ACSXT	
5094-IM8XT		
5094-OA16XT		
5094-IRT8SXT	5094-RTB3ITXT / 5094-RTB3ITSXT	

5094-MB and 5094-MBXT Mounting Bases

This figure shows a diagram for the 5094-MB mounting base.

5094-MB Diagram

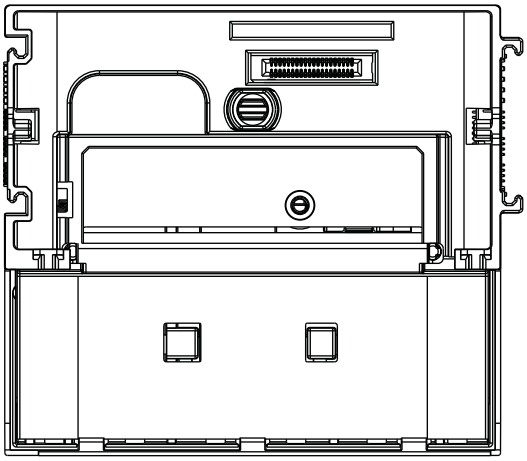

General Specifications - 5094-MB, 5094-MBXT

Attribute	5094-MB, 5094-MBXT
Backplane power (BP), max	100 mA @ 15V DC
Backplane power (VCC), max	15 mA @ 3.3V
DIN rail	Compatible zinc-plated, chromate-passivated steel DIN rail. EN60715 - 35 x 7.5 mm (1.38 x 0.30 in.)
Removable terminal block (RTB)	5094-RTB3, 5094-RTB3XT, 5094-RTB3S, 5094-RTB3SXT, 5094-RTB3T, 5094-RTB3TXT, 5094-RTB3TS, 5094-RTB3TSXT, 5094-RTB3W, 5094-RTB3WXT, 5094-RTB3WS, 5094-RTB3WSXT, 5094-RTB3I, 5094-RTB3IXT, 5094-RTB3IS, 5094-RTB3ISXT **IMPORTANT**: Mounting bases (MBs) and removable terminal bases (RTBs) do not ship with the FLEX 5000 I/O modules. You must purchase a MB and a RTB individually for each I/O module.
Dimensions (HxWxD), approx	85.0 x 94.0 x 37.5 mm (3.35 x 3.70 x 1.48 in.)
Weight, approx	71 g (0.16 lb)
Enclosure type rating	None (open-style)
North American temp code	T4
UKEX/ATEX temp code	T4
IECEx temp code	T4

5094-RTB3, 5094-RTB3XT, 5094-RTB3S, and 5094-RTB3SXT Terminal Blocks

This figure shows a diagram for the 5094-RTB3 terminal block.

5094-RTB3 Diagram

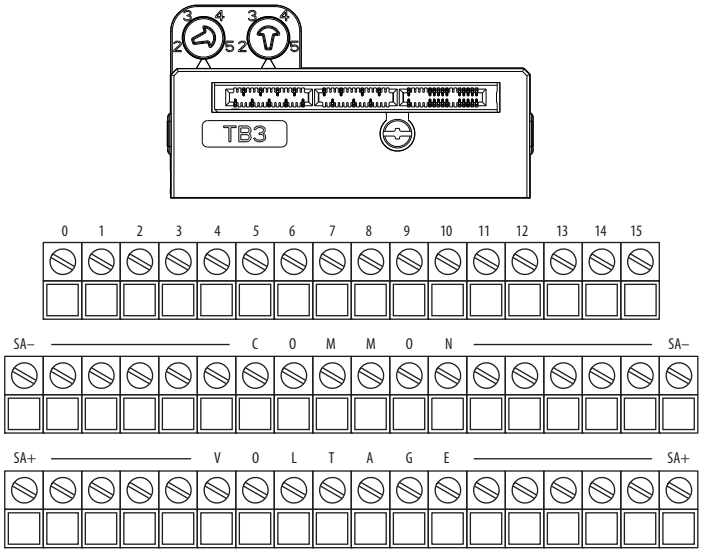

General Specifications - 5094-RTB3, 5094-RTB3XT, 5094-RTB3S, 5094-RTB3SXT

Attribute	5094-RTB3, 5094-RTB3XT, 5094-RTB3S, 5094-RTB3SXT
Input/output ratings (IN/OUT), max	2 A @ 32V DC
Sensor Actuator Power (SA), max	10 A @ 18...32V DC
Do not exceed 10 A MOD power or SA power passthrough current draw.(1)	
Isolation voltage	250V (Continuous), Basic Insulation Type, Channels to Chassis 250V (Continuous), Basic Insulation Type, SA to Chassis
Wire category	Established by installed module
Wire type	Copper
Wire size	0.34...2.5 mm^2 (22...14 AWG) solid or stranded copper wire that is rated at 105 °C (221 °F), or greater, 1.2 mm (3/64 in.) insulation, max Ferrule according to DIN 46 228/1.
Insulation-stripping length	Screw-type TB: • 0.34...2.5 mm^2 (22...14 AWG) = 12 mm ± 1 mm (0.47 ± 0.04 in.) Spring-type TB: • 0.34...1.5 mm^2 (22...16 AWG) = 10 mm ± 1 mm (0.39 ± 0.04 in.) • 2.5 mm^2 (14 AWG) = 15 mm ± 1 mm (0.59 ± 0.04 in.)
TB torque specifications	Screw-type TB: 0.4 N•m (3.5 lb•in) Spring-type TB: Not applicable
Dimensions (HxWxD), approx	53.0 x 94.0 x 76.0 mm (2.08 x 3.70 x 3.00 in.)
Weight, approx	202 g (0.45 lb)
Enclosure type rating	None (open-style)
North American temp code	T4
UKEX/ATEX temp code	T4
IECEx temp code	T4

(1) Maximum level of SA power current that the module is capable of passing through to the next module in the system. The specific level of current passed through varies based on system configuration.

5094-RTB3T, 5094-RTB3TXT, 5094-RTB3TS, and 5094-RTB3TSXT Terminal Blocks

This figure shows a diagram for the 5094-RTB3T terminal block.

5094-RTB3T Diagram

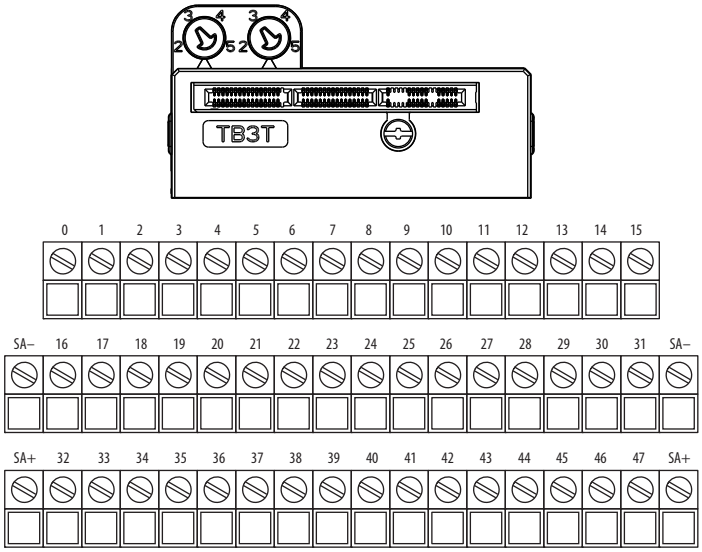

General Specifications - 5094-RTB3T, 5094-RTB3TXT, 5094-RTB3TS, 5094-RTB3TSXT

Attribute	5094-RTB3T, 5094-RTB3TXT, 5094-RTB3TS, 5094-RTB3TSXT
Input ratings (IN), max	100 mA @ 10V DC
Sensor source voltage (SSV) output ratings, max	1.8 A @ 24V DC
Sensor Actuator Power (SA), max	10 A @ 18...32V DC
Do not exceed 10 A MOD power or SA power passthrough current draw.(1)	
Isolation voltage	250V (Continuous), Basic Insulation Type, Channels to Chassis 250V (Continuous), Basic Insulation Type, SA to Chassis
Wire category	Established by installed module
Wire type	Copper
Wire size	0.34...2.5 mm^2 (22...14 AWG) solid or stranded copper wire that is rated at 105 °C (221 °F), or greater, 1.2 mm (3/64 in.) insulation, max Ferrule according to DIN 46 228/1.
Insulation-stripping length	Screw-type TB: • 0.34...2.5 mm^2 (22...14 AWG) = 12 mm ± 1 mm (0.47 ± 0.04 in.) Spring-type TB: • 0.34...1.5 mm^2 (22...16 AWG) = 10 mm ± 1 mm (0.39 ± 0.04 in.) • 2.5 mm^2 (14 AWG) = 15 mm ± 1 mm (0.59 ± 0.04 in.)
TB torque specifications	Screw-type TB: 0.4 N•m (3.5 lb•in) Spring-type TB: Not applicable
Dimensions (HxWxD), approx	53.0 x 94.0 x 76.0 mm (2.08 x 3.70 x 3.00 in.)
Weight, approx	202 g (0.45 lb)
Enclosure type rating	None (open-style)
North American temp code	T4
UKEX/ATEX temp code	T4
IECEx temp code	T4

(1) Maximum level of SA power current that the module is capable of passing through to the next module in the system. The specific level of current passed through varies based on system configuration.

5094-RTB3W, 5094-RTB3WXT, 5094-RTB3WS, and 5094-RTB3WSXT Terminal Blocks

This figure shows a diagram for the 5094-RTB3W terminal block.

5094-RTB3W Diagram

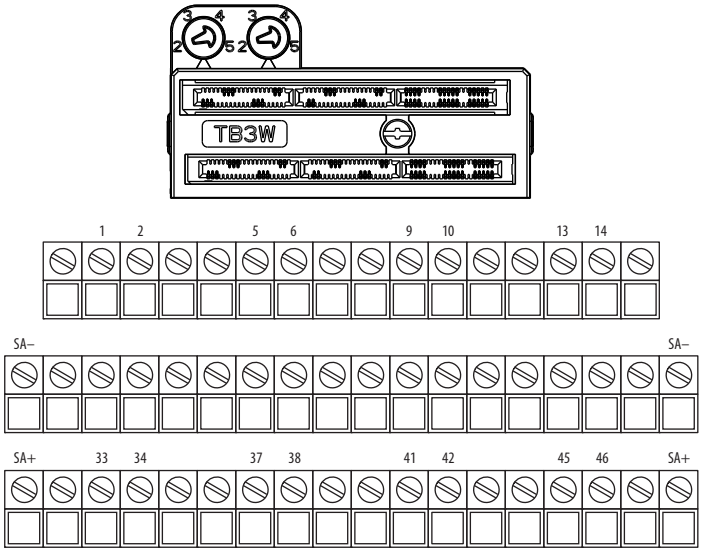

General Specifications - 5094-RTB3W, 5094-RTB3WXT, 5094-RTB3WS, 5094-RTB3WSXT

Attribute	5094-RTB3W, 5094-RTB3WXT, 5094-RTB3WS, 5094-RTB3WSXT
Output ratings (OUT), max	2 A @ 125V DC 2 A @ 240V AC, 50/60 Hz
Sensor Actuator Power (SA), max	10 A @ 18...32V DC
Do not exceed 10 A MOD power or SA power passthrough current draw.(1)	
Isolation voltage	250V (Continuous), Reinforced Insulation Type, Channels to Chassis 250V (Continuous), Reinforced Insulation Type, Channels to SA 250V (Continuous), Basic Insulation Type, SA to Chassis
Wire category	Established by installed module
Wire type	Copper
Wire size	0.34...2.5 mm^2 (22...14 AWG) solid or stranded copper wire that is rated at 105 °C (221 °F), or greater, 1.2 mm (3/64 in.) insulation, max Ferrule according to DIN 46 228/1.
Insulation-stripping length	Screw-type TB: • 0.34...2.5 mm^2 (22...14 AWG) = 12 mm ± 1 mm (0.47 ± 0.04 in.) Spring-type TB: • 0.34...1.5 mm^2 (22...16 AWG) = 10 mm ± 1 mm (0.39 ± 0.04 in.) • 2.5 mm^2 (14 AWG) = 15 mm ± 1 mm (0.59 ± 0.04 in.)
TB torque specifications	Screw-type TB: 0.4 N•m (3.5 lb•in) Spring-type TB: Not applicable
Dimensions (HxWxD), approx	53.0 x 94.0 x 76.0 mm (2.08 x 3.70 x 3.00 in.)
Weight, approx	202 g (0.45 lb)
Enclosure type rating	None (open-style)
North American temp code	T4
UKEX/ATEX temp code	T4
IECEx temp code	T4

(1) Maximum level of SA power current that the module is capable of passing through to the next module in the system. The specific level of current passed through varies based on system configuration.

5094-RTB3I, 5094-RTB3IXT, 5094-RTB3IS, and 5094-RTB3ISXT Terminal Blocks

This figure shows a diagram for the 5094-RTB3I terminal block.

5094-RTB3I Diagram

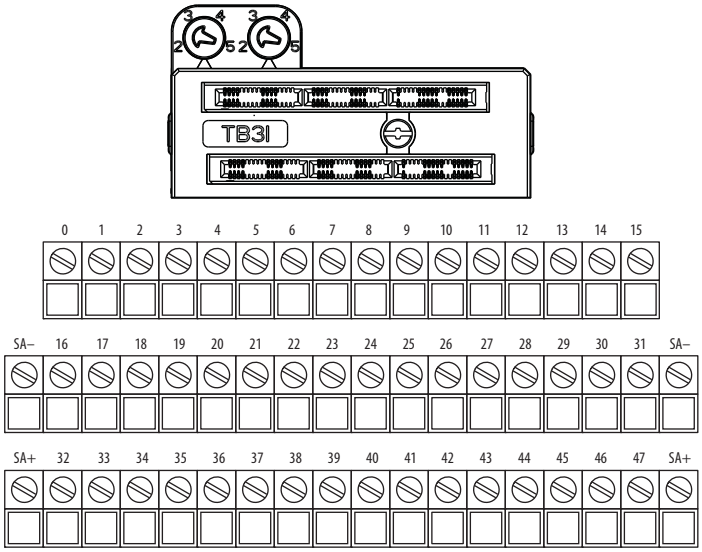

General Specifications - 5094-RTB3I, 5094-RTB3IXT, 5094-RTB3IS, 5094-RTB3ISXT

Attribute	5094-RTB3I, 5094-RTB3IXT, 5094-RTB3IS, 5094-RTB3ISXT
Input/output ratings (IN/OUT), max	2 A @ 32V DC
Sensor Actuator Power (SA), max	10 A @ 18...32V DC
Do not exceed 10 A MOD power or SA power passthrough current draw.(1)	
Isolation voltage	250V (Continuous), Basic Insulation Type, Channels to Chassis 250V (Continuous), Basic Insulation Type, SA to Chassis
Wire category	Established by installed module
Wire type	Copper
Wire size	0.34...2.5 mm^2 (22...14 AWG) solid or stranded copper wire that is rated at 105 °C (221 °F), or greater, 1.2 mm (3/64 in.) insulation, max Ferrule according to DIN 46 228/1.
Insulation-stripping length	Screw-type TB: • 0.34...2.5 mm^2 (22...14 AWG) = 12 mm ± 1 mm (0.47 ± 0.04 in.) Spring-type TB: • 0.34...1.5 mm^2 (22...16 AWG) = 10 mm ± 1 mm (0.39 ± 0.04 in.) • 2.5 mm^2 (14 AWG) = 15 mm ± 1 mm (0.59 ± 0.04 in.)
TB torque specifications	Screw-type TB: 0.4 N•m (3.5 lb•in) Spring-type TB: Not applicable
Dimensions (HxWxD), approx	53.0 x 94.0 x 76.0 mm (2.08 x 3.70 x 3.00 in.)
Weight, approx	202 g (0.45 lb)
Enclosure type rating	None (open-style)
North American temp code	T4
UKEX/ATEX temp code	T4
IECEx temp code	T4

(1) Maximum level of SA power current that the module is capable of passing through to the next module in the system. The specific level of current passed through varies based on system configuration.

5094-RTB3IT, 5094-RTB3ITS, 5094-RTB3ITXT, 5094-RTB3ITSXT Terminal Blocks

This figure shows a diagram for the 5094-RTB3IT terminal block.

5094-RTB3IT Diagram

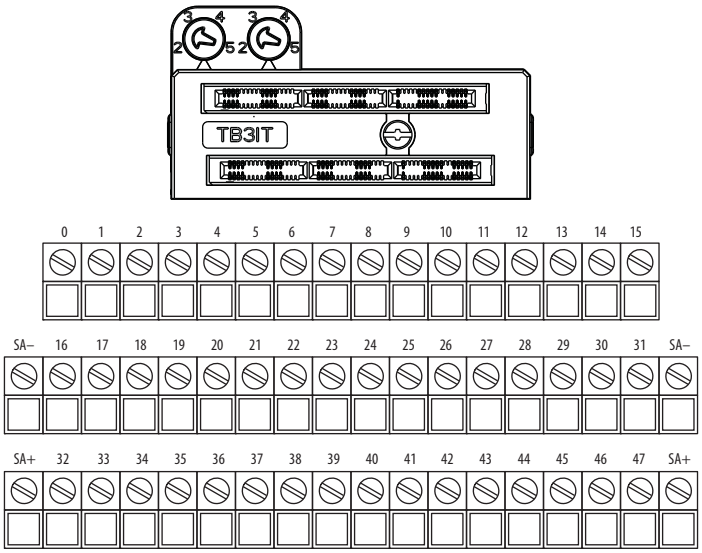

General Specifications - 5094-RTB3IT, 5094-RTB3ITS, 5094-RTB3ITXT, 5094-RTB3ITSXT

Attribute	5094-RTB3IT, 5094-RTB3ITS, 5094-RTB3ITXT, 5094-RTB3ITSXT
Input/output ratings (IN/OUT), max	2 A @ 32V DC
Sensor Actuator Power (SA), max	10 A @ 18...32V DC
Do not exceed 10 A MOD power or SA power passthrough current draw.(1)	
Isolation voltage	250V (Continuous), Basic Insulation Type, Channels to Chassis 250V (Continuous), Basic Insulation Type, SA to Chassis
Wire category	Established by installed module
Wire type	Copper
Wire size	0.34...2.5 mm^2 (22...14 AWG) solid or stranded copper wire that is rated at 105 °C (221 °F), or greater, 1.2 mm (3/64 in.) insulation, max Ferrule according to DIN 46 228/1.
Insulation-stripping length	Screw-type TB: • 0.34...2.5 mm^2 (22...14 AWG) = 12 mm ± 1 mm (0.47 ± 0.04 in.) Spring-type TB: • 0.34...1.5 mm^2 (22...16 AWG) = 10 mm ± 1 mm (0.39 ± 0.04 in.) • 2.5 mm^2 (14 AWG) = 15 mm ± 1 mm (0.59 ± 0.04 in.)
TB torque specifications	Screw-type TB: 0.4 N•m (3.5 lb•in) Spring-type TB: Not applicable
Dimensions (HxWxD), approx	53.0 x 94.0 x 76.0 mm (2.08 x 3.70 x 3.00 in.)
Weight, approx	202 g (0.45 lb)
Enclosure type rating	None (open-style)
North American temp code	T4
UKEX/ATEX temp code	T4
IECEx temp code	T4

(1) Maximum level of SA power current that the module is capable of passing through to the next module in the system. The specific level of current passed through varies based on system configuration.

5094-RTB32V, 5094-RTB32VXT, 5094-RTB32VS, and 5094-RTB32VSXT Terminal Blocks

This figure shows a diagram for the 5094-RTB32V terminal block.

5094-RTB32V Diagram

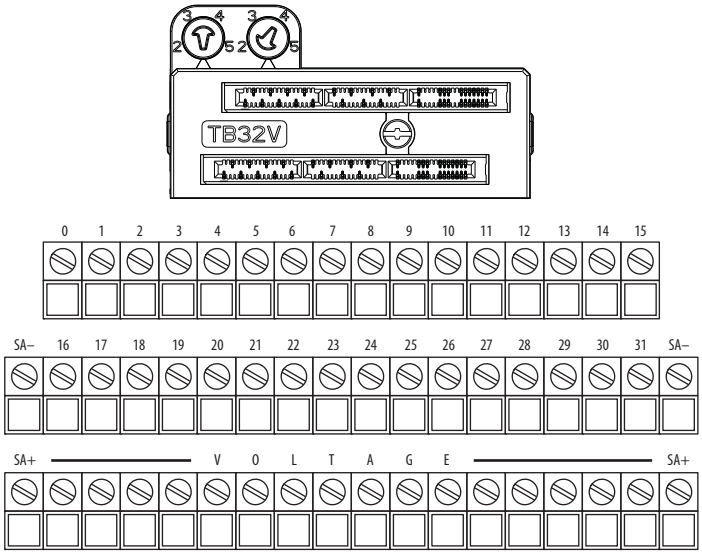

General Specifications - 5094-RTB32V, 5094-RTB32VXT, 5094-RTB32VS, 5094-RTB32VSXT

Attribute	5094-RTB32V, 5094-RTB32VXT, 5094-RTB32VS, 5094-RTB32VSXT
Input/output ratings (IN/OUT), max	2 A @ 32V DC
Sensor Actuator Power (SA), max	10 A @ 18...32V DC
Do not exceed 10 A MOD power or SA power passthrough current draw.(1)	
Isolation voltage	250V (Continuous), Basic Insulation Type, Channels to Chassis 250V (Continuous), Basic Insulation Type, SA to Chassis
Wire category	Established by installed module
Wire type	Copper
Wire size	0.34...2.5 mm^2 (22...14 AWG) solid or stranded copper wire that is rated at 105 °C (221 °F), or greater, 1.2 mm (3/64 in.) insulation, max Ferrule according to DIN 46 228/1.
Insulation-stripping length	Screw-type TB: • 0.34...2.5 mm^2 (22...14 AWG) = 12 mm ± 1 mm (0.47 ± 0.04 in.) Spring-type TB: • 0.34...1.5 mm^2 (22...16 AWG) = 10 mm ± 1 mm (0.39 ± 0.04 in.) • 2.5 mm^2 (14 AWG) = 15 mm ± 1 mm (0.59 ± 0.04 in.)
TB torque specifications	Screw-type TB: 0.4 N•m (3.5 lb•in) Spring-type TB: Not applicable
Dimensions (HxWxD), approx	53.0 x 94.0 x 76.0 mm (2.08 x 3.70 x 3.00 in.)
Weight, approx	202 g (0.45 lb)
Enclosure type rating	None (open-style)
North American temp code	T4
UKEX/ATEX temp code	T4
IECEx temp code	T4

(1) Maximum level of SA power current that the module is capable of passing through to the next module in the system. The specific level of current passed through varies based on system configuration.

5094-RTB32C, 5094-RTB32CXT, 5094-RTB32CS, and 5094-RTB32CSXT Terminal Blocks

This figure shows a diagram for the 5094-RTB32C terminal block.

5094-RTB32C Diagram

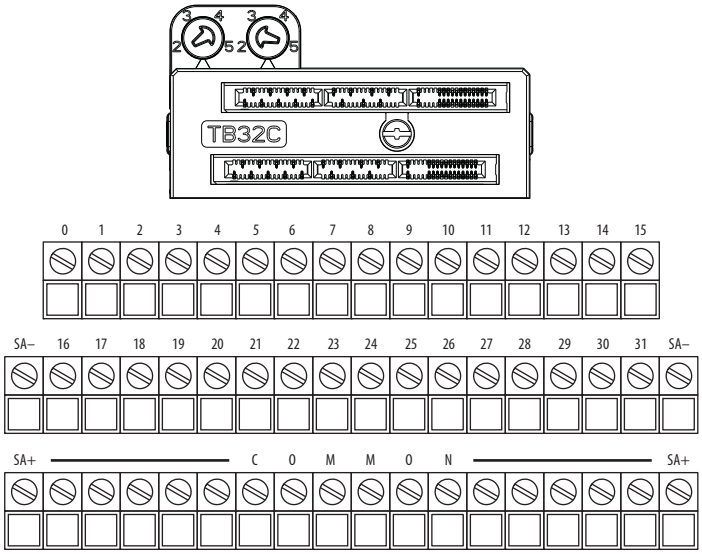

General Specifications - 5094-RTB32C, 5094-RTB32CXT, 5094-RTB32CS, 5094-RTB32CSXT

Attribute	5094-RTB32C, 5094-RTB32CXT, 5094-RTB32CS, 5094-RTB32CSXT
Input/output ratings (IN/OUT), max	2 A @ 32V DC
Sensor Actuator Power (SA), max	10 A @ 18...32V DC
Do not exceed 10 A MOD power or SA power passthrough current draw.(1)	
Isolation voltage	250V (Continuous), Basic Insulation Type, Channels to Chassis 250V (Continuous), Basic Insulation Type, SA to Chassis
Wire category	Established by installed module
Wire type	Copper
Wire size	0.34...2.5 mm^2 (22...14 AWG) solid or stranded copper wire that is rated at 105 °C (221 °F), or greater, 1.2 mm (3/64 in.) insulation, max Ferrule according to DIN 46 228/1.
Insulation-stripping length	Screw-type TB: • 0.34...2.5 mm^2 (22...14 AWG) = 12 mm ± 1 mm (0.47 ± 0.04 in.) Spring-type TB: • 0.34...1.5 mm^2 (22...16 AWG) = 10 mm ± 1 mm (0.39 ± 0.04 in.) • 2.5 mm^2 (14 AWG) = 15 mm ± 1 mm (0.59 ± 0.04 in.)
TB torque specifications	Screw-type TB: 0.4 N•m (3.5 lb•in) Spring-type TB: Not applicable
Dimensions (HxWxD), approx	53.0 x 94.0 x 76.0 mm (2.08 x 3.70 x 3.00 in.)
Weight, approx	202 g (0.45 lb)
Enclosure type rating	None (open-style)
North American temp code	T4
UKEX/ATEX temp code	T4
IECEx temp code	T4

(1) Maximum level of SA power current that the module is capable of passing through to the next module in the system. The specific level of current passed through varies based on system configuration.

5094-RTB3AC, 5094-RTB3ACXT, 5094-RTB3ACS, and 5094-RTB3ACSXT Terminal Blocks

This figure shows a diagram for the 5094-RTB3AC terminal block.

5094-RTB3AC Diagram

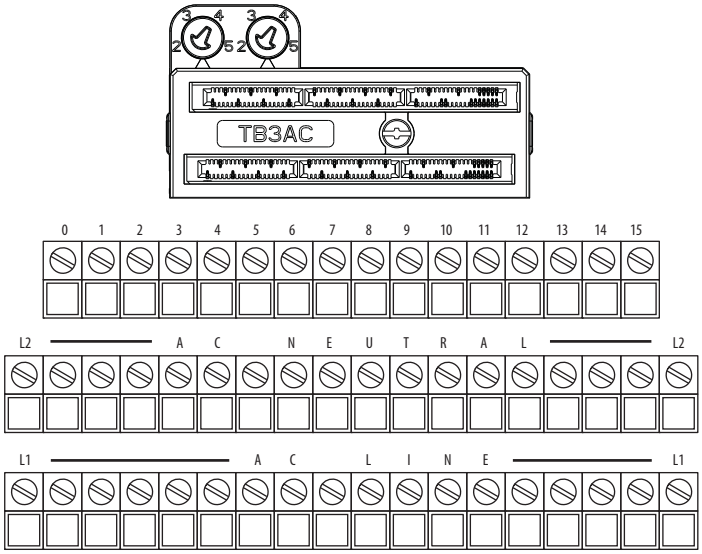

General Specifications - 5094-RTB3AC, 5094-RTB3ACXT, 5094-RTB3ACS, 5094-RTB3ACSXT

Attribute	5094-RTB3AC, 5094-RTB3ACXT, 5094-RTB3ACS, 5094-RTB3ACSXT
Input/output ratings (IN/OUT), max	2 A @ 240V AC, 50/60 Hz
Sensor Actuator Power (SA), max	10 A @ 240V AC, 50/60 Hz
Do not exceed 10 A MOD power or SA power passthrough current draw.(1)	
Isolation voltage	250V (Continuous), Basic Insulation Type, Channels to Chassis 250V (Continuous), Basic Insulation Type, SA to Chassis
Wire category	Established by installed module
Wire type	Copper
Wire size	0.34...2.5 mm^2 (22...14 AWG) solid or stranded copper wire that is rated at 105 °C (221 °F), or greater, 1.2 mm (3/64 in.) insulation, max Ferrule according to DIN 46 228/1.
Insulation-stripping length	Screw-type TB: • 0.34...2.5 mm^2 (22...14 AWG) = 12 mm ± 1 mm (0.47 ± 0.04 in.) Spring-type TB: • 0.34...1.5 mm^2 (22...16 AWG) = 10 mm ± 1 mm (0.39 ± 0.04 in.) • 2.5 mm^2 (14 AWG) = 15 mm ± 1 mm (0.59 ± 0.04 in.)
TB torque specifications	Screw-type TB: 0.4 N•m (3.5 lb•in) Spring-type TB: Not applicable
Dimensions (HxWxD), approx	53.0 x 94.0 x 76.0 mm (2.08 x 3.70 x 3.00 in.)
Weight, approx	202 g (0.45 lb)
Enclosure type rating	None (open-style)
North American temp code	T4
UKEX/ATEX temp code	T4
IECEx temp code	T4

(1) Maximum level of SA power current that the module is capable of passing through to the next module in the system. The specific level of current passed through varies based on system configuration.

Environmental Specifications and Certifications

These tables provide the environmental specifications and certifications for the FLEX 5000 terminal base assemblies.

Environmental Specifications - FLEX 5000 Terminal Base Assemblies

Attribute	5094-MB, 5094-MBXT, 5094-RTB3, 5094-RTB3XT, 5094-RTB3S, 5094-RTB3SXT, 5094-RTB3T, 5094-RTB3TXT, 5094-RTB3TS, 5094-RTB3TSXT, 5094-RTB3W, 5094-RTB3WXT, 5094-RTB3WS, 5094-RTB3WSXT, 5094-RTB3I, 5094-RTB3IXT, 5094-RTB3IS, 5094-RTB3ISXT, 5094-RTB32V, 5094-RTB32VXT, 5094-RTB32VS, 5094-RTB32VSXT, 5094-RTB32C, 5094-RTB32CXT, 5094-RTB32CS, 5094-RTB3ACSXT, 5094-RTB3AC, 5094-RTB3ACXT, 5094-RTB3ACS, 5094-RTB3ACSXT, 5094-RTB3IT, 5094-RTB3ITS, 5094-RTB3ITXT, 5094-RTB3ITSXT
Temperature, operating IEC 60068-2-1 (Test Ad, Operating Cold), IEC 60068-2-2 (Test Bd, Operating Dry Heat), IEC 60068-2-14 (Test Nb, Operating Thermal Shock)	-40 °C ≤ Ta ≤ +70 °C (-40 °F ≤ Ta ≤ +158 °C)
Temperature, surrounding air, max	70 °C (158 °F)
Temperature, nonoperating IEC 60068-2-1 (Test Ab, Unpackaged Nonoperating Cold), IEC 60068-2-2 (Test Bb, Unpackaged Nonoperating Dry Heat), IEC 60068-2-14 (Test Na, Unpackaged Nonoperating Thermal Shock)	-40...+85 °C (-40...+185 °F)
Relative humidity IEC 60068-2-30 (Test Db, Unpackaged Damp Heat)	5...95% noncondensing
Vibration IEC 60068-2-6 (Test Fc, Operating)	5 g @ 10...500 Hz
Shock, operating IEC 60068-2-27 (Test Ea, Unpackaged Shock)	30 g
Shock, nonoperating IEC 60068-2-27 (Test Ea, Unpackaged Shock)	30 g
Corrosion resistance classification	ISA S71.04 G2 – **Non-XT catalogs** ISA S71.04 G3 – **XT catalogs**

Certifications - FLEX 5000 Terminal Base Assemblies

Certification[1]	5094-MB, 5094-MBXT, 5094-RTB3, 5094-RTB3XT, 5094-RTB3S, 5094-RTB3SXT, 5094-RTB3T, 5094-RTB3TXT, 5094-RTB3TS, 5094-RTB3TSXT, 5094-RTB3W, 5094-RTB3WXT, 5094-RTB3WS, 5094-RTB3WSXT, 5094-RTB3I, 5094-RTB3IXT, 5094-RTB3IS, 5094-RTB3ISXT, 5094-RTB32V, 5094-RTB32VXT, 5094-RTB32VS, 5094-RTB32VSXT, 5094-RTB32C, 5094-RTB32CXT, 5094-RTB32CS, 5094-RTB3ACSXT, 5094-RTB3AC, 5094-RTB3ACXT, 5094-RTB3ACS, 5094-RTB3ACSXT, 5094-RTB3IT, 5094-RTB3ITS, 5094-RTB3ITXT, 5094-RTB3ITSXT
c-UL-us	UL Listed Industrial Control Equipment, certified for US and Canada. See UL File E322657. UL Listed for Class I, Division 2 Group A,B,C,D Hazardous Locations, certified for U.S. and Canada. See UL File E334470.
CE	European Union 2014/30/EU EMC Directive, compliant with: EN 61326-1; Meas./Control/Lab., Industrial Requirements EN 61000-6-2; Industrial Immunity EN 61000-6-4; Industrial Emissions EN 61131-2; Programmable Controllers (Clause 8, Zone A & B) European Union 2014/35/EU LVD, compliant with: – **For RTBs** EN 61010-2-201; Control Equipment Safety Requirements European Union 2011/65/EU RoHS, compliant with: EN 63000; Technical Documentation
RCM	Australian Radiocommunications Act, compliant with: EN 61000-6-4; Industrial Emissions
Ex	UK Statutory Instrument 2016 No. 1107 and European Union 2014/34/EU ATEX Directive, compliant with: EN IEC 60079-0; General Requirements EN IEC 60079-7; Potentially Explosive Atmospheres, Protection "e" II 3 G Ex ec IIC T4 Gc DEMKO 17 ATEX 1922X UL21UKEX2275X
IECEx	IECEx System, compliant with: IEC 60079-0; General Requirements IEC 60079-7; Potentially Explosive Atmospheres, Protection "e" Ex ec IIC T4 Gc IECEx UL 17.0075X
KC	Korean Registration of Broadcasting and Communications Equipment, compliant with: Article 58-2 of Radio Waves Act, Clause 3
Morocco	Arrêté ministériel n° 6404-15 du 1 er muharram 1437 Arrêté ministériel n° 6404-15 du 29 ramadan 1436

Certifications - FLEX 5000 Terminal Base Assemblies (Continued)

Certification[1]	5094-MB, 5094-MBXT, 5094-RTB3, 5094-RTB3XT, 5094-RTB3S, 5094-RTB3SXT, 5094-RTB3T, 5094-RTB3TXT, 5094-RTB3TS, 5094-RTB3TSXT, 5094-RTB3W, 5094-RTB3WXT, 5094-RTB3WS, 5094-RTB3WSXT, 5094-RTB3I, 5094-RTB3IXT, 5094-RTB3IS, 5094-RTB3ISXT, 5094-RTB32V, 5094-RTB32VXT, 5094-RTB32VS, 5094-RTB32VSXT, 5094-RTB32C, 5094-RTB32CXT, 5094-RTB32CS, 5094-RTB3ACSXT, 5094-RTB3AC, 5094-RTB3ACXT, 5094-RTB3ACS, 5094-RTB3ACSXT, 5094-RTB3IT, 5094-RTB3ITS, 5094-RTB3ITXT, 5094-RTB3ITSXT
EAC	Russian Customs Union TR CU 020/2011 EMC Technical Regulation Russian Customs Union TR CU 004/2011 LV Technical Regulation
CCC	CNCA-C23-01 强制性产品认证实施规则 防爆电气 CNCA-C23-01 CCC Implementation Rule Explosion-Proof Electrical Products
UKCA	2016 No. 1091 – Electromagnetic Compatibility Regulations 2016 No. 1101 – Electrical Equipment (Safety) Regulations 2016 No. 1107 – Equipment and Protective Systems Intended for Use in Potentially Explosive Atmospheres Regulations 2012 No. 3032 – Restriction of the Use of Certain Hazardous Substances in Electrical and Electronic Equipment Regulations

(1) See the Product Certifications website at rok.auto/certifications for declarations of conformity, certificates, and other certification details.

Accessories

Type	Catalog Number	Page
Shield bar	5094-STB	123
SA power jumper	5094-SAJMPR	124
Filler module	5094-N2	124
Interconnect cable	5094-CE05, 5094-CE10, 5094-CE30	125

5094-STB Shield Bar

This figure shows a diagram for the 5094-STB shield bar. You must ground the shield bar separately after you install it in your FLEX 5000 I/O system. The shield bar order catalog number is 5094-STB-QTY5 (pack of 5).

5094-STB Diagram

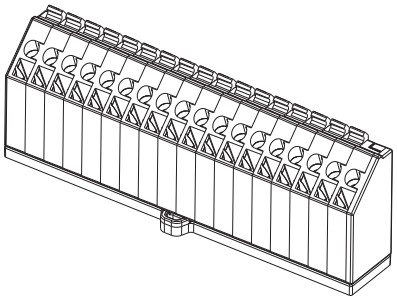

General Specifications - 5094-STB

Attribute	5094-STB
Voltage, max	300V AC
Current, max	10 A
Wire size	0.34...2.5 mm^2 (22...14 AWG) solid or stranded copper wire that is rated at 105 °C (221 °F), or greater, 1.2 mm (3/64 in.) insulation, max Ferrule according to DIN 46 228/1.
Insulation-stripping length	12 mm ± 1 mm (0.47 ± 0.04 in.)
Torque specifications	0.4 N•m (3.5 lb•in)
Dimensions (HxWxD), approx	33.0 x 94.0 x 24.0 (1.30 x 3.70 x 0.94 in.) Includes release latch, locking pegs, and mounting hooks
Weight, approx	56 g (1.97 oz.)
Enclosure type rating	None (open-style)

5094-SAJMPR SA Power Jumper

This figure shows a diagram for the 5094-SAJMPR SA power jumper. This jumper can only be used with screw-type terminal bases. You cannot use this jumper with spring-type terminal bases.

5094-SAJMPR Diagram

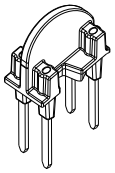

General Specifications - 5094-SAJMPR

Attribute	5094-SAJMPR
Voltage, max	300V AC
Current, max	10 A

Environmental Specifications - 5094-SAJMPR

Attribute	5094-SAJMPR
Temperature, operating IEC 60068-2-1 (Test Ad, Operating Cold), IEC 60068-2-2 (Test Bd, Operating Dry Heat), IEC 60068-2-14 (Test Nb, Operating Thermal Shock)	-40 °C < Ta < +70 °C (-40 °F < Ta < +158 °F)
Temperature, nonoperating IEC 60068-2-1 (Test Ab, Unpackaged Nonoperating Cold), IEC 60068-2-2 (Test Bb, Unpackaged Nonoperating Dry Heat), IEC 60068-2-14 (Test Na, Unpackaged Nonoperating Thermal Shock)	-40...+85 °C (-40...+185 °F)

5094-N2 Filler Module

This module is used to fill an otherwise empty slot: a terminal base (TB) assembly, which consists of a mounting base (MB) and removable terminal block (RTB), with no I/O module. This filler module contains no electronics.

5094-N2 Diagram

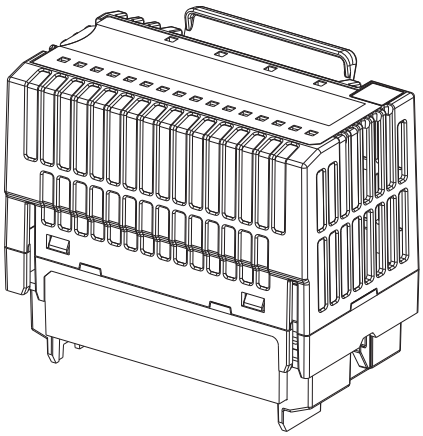

5094-CE05, 5094-CE10, 5094-CE30 Interconnect Cable

This cable is used to separate a FLEX 5000 I/O system into two banks of modules and provide system-side power to FLEX 5000 I/O modules. A FLEX 5000 I/O system supports up to two banks of modules, up to the maximum supported by the adapter, which are connected with the cable.

5094-CE05, 5094-CE10, 5094-CE30 Diagrams

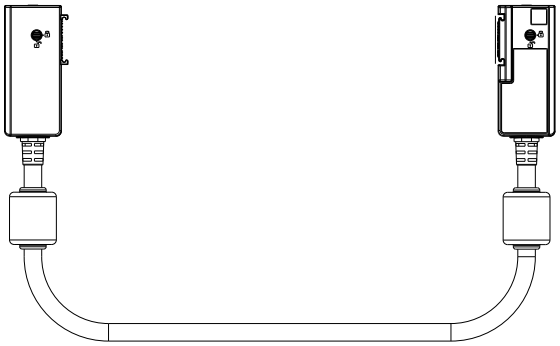

General Specifications - 5094-CE05, 5094-CE10, 5094-CE30

Attribute	5094-CE05, 5094-CE10, 5094-CE30
Backplane power (BP), max	1.8 A @ 15V DC
Cable length	5094-CE05 – 0.5 m (1.6 ft) 5094-CE10 – 1.0 m (3.3 ft) 5094-CE30 – 3.0 m (10 ft)
Weight, approx	5094-CE05 – 390 g (13.8 oz.) 5094-CE10 – 497 g (17.5 oz.) 5094-CE30 – 933 g (32.9 oz.)
Enclosure type rating	None (open-style)
North American temp code	T4
UKEX/ATEX temp code	T4
IECEx temp code	T4

Environmental Specifications - 5094-CE05, 5094-CE10, 5094-CE30

Attribute	5094-CE05, 5094-CE10, 5094-CE30
Temperature, operating IEC 60068-2-1 (Test Ad, Operating Cold), IEC 60068-2-2 (Test Bd, Operating Dry Heat), IEC 60068-2-14 (Test Nb, Operating Thermal Shock)	-40 °C ≤ Ta ≤ +70 °C (-40 °F ≤ Ta ≤ +158 °F)
Temperature, surrounding air, max	70 °C (158 °F)
Corrosion resistance classification	ISA S71.04 G3

Notes:

Additional Resources

These documents contain additional information concerning related products from Rockwell Automation.

Additional Resources

Resource	Description
FLEX 5000 EtherNet/IP Adapters with RJ45 Ports Installation Instructions, publication 5094-IN001	Describes how to install and wire the FLEX 5000 EtherNet/IP adapters.
FLEX 5000 EtherNet/IP Adapters with SFP Support Installation Instructions, publication 5094-IN002	Describes how to install and wire the FLEX 5000 EtherNet/IP adapters with SFP support.
FLEX 5000 Digital 16-point Sinking Input Modules Installation Instructions, publication 5094-IN003	Describes how to install and wire the FLEX 5000 I/O digital input modules.
FLEX 5000 Digital 16-point Sourcing Output Modules Installation Instructions, publication 5094-IN004	Describes how to install and wire the FLEX 5000 I/O digital output modules.
FLEX 5000 Digital 8-point Isolated Relay Output Modules Installation Instructions, publication 5094-IN005	Describes how to install and wire the FLEX 5000 I/O digital isolated relay output modules.
FLEX 5000 Analog 8-channel Current/Voltage Input Modules Installation Instructions, publication 5094-IN006	Describes how to install and wire the FLEX 5000 I/O analog input modules.
FLEX 5000 Analog 8-channel Current/Voltage Output Modules Installation Instructions, publication 5094-IN007	Describes how to install and wire the FLEX 5000 I/O analog output modules.
FLEX 5000 Analog 8-channel Current/Voltage/RTD/Thermocouple Input Modules Installation Instructions, publication 5094-IN008	Describes how to install and wire the FLEX 5000 I/O analog RTD/Thermocouple input modules.
FLEX 5000 High-speed Counter I/O Modules Installation Instructions, publication 5094-IN009	Describes how to install and wire the FLEX 5000 I/O high-speed counter modules.
FLEX 5000 Terminal Base Assembly Modules Installation Instructions, publication 5094-IN010	Describes how to install the FLEX 5000 terminal base assemblies.
FLEX 5000 Interconnect Cables Installation Instructions, publication 5094-IN011	Describes how to install the FLEX 5000 interconnect cable.
FLEX 5000 Digital 16-point Sinking Safety Input Modules Installation Instructions, publication 5094-IN012	Describes how to install and wire the FLEX 5000 I/O digital safety input modules.
FLEX 5000 Digital 16-point Sourcing Safety Output Modules Installation Instructions, publication 5094-IN013	Describes how to install and wire the FLEX 5000 I/O digital safety output modules.
FLEX 5000 Relay 4-point Safety Output Modules Installation Instructions, publication 5094-IN015	Describes how to install and wire the FLEX 5000 I/O relay 4-point safety output modules.
FLEX 5000 Analog 4-channel Isolated Current/Voltage/HART Safety Input Modules, publication 5094-IN016	Describes how to install and wire the FLEX 5000 I/O analog 4-channel safety input modules.
FLEX 5000 Analog 4-channel Isolated Current/Voltage/HART Safety Output Modules Installation Intructions, publication 5094-IN017	Describes how to install and wire the FLEX 5000 I/O analog 4-channel safety output modules.
FLEX 5000 Analog 8-channel RTD/Thermocouple Safety Input Modules Installation Instructions, publication 5094-IN018	Describes how to install and wire the FLEX 5000 I/O analog 8-channel safety input modules.
FLEX 5000 Frequency 2-channel Isolated Safety Input Modules Installation Instructions, publication 5094-IN019	Describes how to install and wire the FLEX 5000 I/O 2-channel isolated-frequency safety input modules.
FLEX 5000 Analog 8-channel Isolated Current/Voltage/HART Input Modules Installation Instructions, publication 5094-IN020	Describes how to install and wire the FLEX 5000 I/O analog isolated HART input modules.
FLEX 5000 Analog 8-channel Isolated Current/Voltage/HART Output Modules Installation Instructions, publication 5094-IN021	Describes how to install and wire the FLEX 5000 I/O analog isolated HART output modules.
FLEX 5000 Digital 32-point Sinking Input Modules Installation Instructions, publication 5094-IN022	Describes how to install and wire the FLEX 5000 I/O digital input modules.
FLEX 5000 Digital 8-point High Current Output Modules Installation Instructions, publication 5094-IN023	Describes how to install and wire the FLEX 5000 I/O digital high current output modules.
FLEX 5000 Digital 32-point Sourcing Output Modules Installation Instructions, publication 5094-IN024	Describes how to install and wire the FLEX 5000 I/O digital output modules.
FLEX 5000 Digital 16-point 120V AC Input Modules Installation Instructions, publication 5094-IN025	Describes how to install and wire the FLEX 5000 I/O digital AC input modules.
FLEX 5000 Digital 8-point 240V AC Input Modules Installation Instructions, publication 5094-IN026	Describes how to install and wire the FLEX 5000 I/O digital AC input modules.
FLEX 5000 Digital 16-point 120/240V AC Output Modules Installation Instructions, publication 5094-IN027	Describes how to install and wire the FLEX 5000 I/O digital AC output modules.
FLEX 5000 Serial Modules Installation Instructions, publication 5094-IN028	Describes how to install and wire the FLEX 5000 I/O serial interface modules.
FLEX 5000 2-channel Isolated-frequency Input Modules Installation Instructions, publication 5094-IN029	Describes how to install and wire the FLEX 5000 I/O 2-channel isolated-frequency input modules.

Additional Resources (Continued)

Resource	Description
Replacement Guidelines: Logix 5000 Controllers Reference Manual, publication 1756-RM100	Provides guidelines on how to replace the following: – ControlLogix 5560/5570 controller with a ControlLogix 5580 controller – CompactLogix 5370 L3 controllers with a CompactLogix 5380 controller
FLEX 5000 Standard and Safety I/O Modules User Manual, publication 5094-UM001	Provides information on how to configure and operate FLEX 5000 I/O standard and safety digital modules.
FLEX 5000 Analog I/O Modules User Manual, publication 5094-UM002	Provides information on how to configure and operate FLEX 5000 I/O analog modules.
FLEX 5000 High Speed Counter I/O Modules User Manual, publication 5094-UM003	Provides information on how to configure and operate FLEX 5000 I/O high-speed counter modules.
FLEX 5000 I/O Standard and Safety Frequency Input Modules User Manual, publication 5094-UM004	Provides information on how to configure and operate FLEX 5000 I/O standard and safety frequency input modules.
FLEX 5000 EtherNet/IP Adapter User Manual, publication 5094-UM005	Provides information on how to configure and operate FLEX 5000 EtherNet/IP adapters.
FLEX 5000 Serial Modules User Manual, publication 5094-UM006	Provides information on how to configure and operate FLEX 5000 I/O serial modules.
FLEX 5000 I/O Analog Isolated Current/Voltage/HART Standard and Safety Modules User Manual, publication 5094-UM007	Provides information on how to configure and operate FLEX 5000 I/O analog isolated HART standard and safety modules.
EtherNet/IP Network Devices User Manual, publication ENET-UM006	Describes how to configure and use EtherNet/IP devices to communicate on the EtherNet/IP network.
Ethernet Reference Manual, publication ENET-RM002	Describes basic Ethernet concepts, infrastructure components, and infrastructure features.
System Security Design Guidelines Reference Manual, publication SECURE-RM001	Provides guidance on how to conduct security assessments, implement Rockwell Automation products in a secure system, harden the control system, manage user access, and dispose of equipment.
Industrial Components Preventive Maintenance, Enclosures, and Contact Ratings Specifications, publication IC-TD002	Provides a quick reference tool for Allen-Bradley industrial automation controls and assemblies.
Safety Guidelines for the Application, Installation, and Maintenance of Solid-state Control, publication SGI-1.1	Designed to harmonize with NEMA Standards Publication No. ICS 1.1-1987 and provides general guidelines for the application, installation, and maintenance of solid-state control in the form of individual devices or packaged assemblies incorporating solid-state components.
Industrial Automation Wiring and Grounding Guidelines, publication 1770-4.1	Provides general guidelines for installing a Rockwell Automation industrial system.
Product Certifications website, rok.auto/certifications	Provides declarations of conformity, certificates, and other certification details.

You can view or download publications at rok.auto/literature.

Rockwell Automation Support

Use these resources to access support information.

Technical Support Center	Find help with how-to videos, FAQs, chat, user forums, Knowledgebase, and product notification updates.	rok.auto/support
Local Technical Support Phone Numbers	Locate the telephone number for your country.	rok.auto/phonesupport
Technical Documentation Center	Quickly access and download technical specifications, installation instructions, and user manuals.	rok.auto/techdocs
Literature Library	Find installation instructions, manuals, brochures, and technical data publications.	rok.auto/literature
Product Compatibility and Download Center (PCDC)	Download firmware, associated files (such as AOP, EDS, and DTM), and access product release notes.	rok.auto/pcdc

Documentation Feedback

Your comments help us serve your documentation needs better. If you have any suggestions on how to improve our content, complete the form at rok.auto/docfeedback.

Allen-Bradley, CompactLogix, ControlLogix, expanding human possibility, FactoryTalk, FLEX 5000, GuardLogix, Logix 5000, Rockwell Automation, Stratix, Studio 5000 Logix Designer, and TechConnect are trademarks of Rockwell Automation, Inc.

CIP Sync and EtherNet/IP are trademarks of ODVA, Inc.

Trademarks not belonging to Rockwell Automation are property of their respective companies.

Rockwell Automation maintains current product environmental compliance information on its website at rok.auto/pec.

Rockwell Otomasyon Ticaret A.Ş. Kar Plaza İş Merkezi E Blok Kat:6 34752, İçerenköy, İstanbul, Tel: +90 (216) 5698400 EEE Yönetmeliğine Uygundur

Connect with us.

rockwellautomation.com — expanding **human possibility**®

AMERICAS: Rockwell Automation, 1201 South Second Street, Milwaukee, WI 53204-2496 USA, Tel: (1) 414.382.2000, Fax: (1) 414.382.4444
EUROPE/MIDDLE EAST/AFRICA: Rockwell Automation NV, Pegasus Park, De Kleetlaan 12a, 1831 Diegem, Belgium, Tel: (32) 2663 0600, Fax: (32) 2 663 0640
ASIA PACIFIC: Rockwell Automation SEA Pte Ltd., 2 Corporation Road, #04-05, Main Lobby, Corporation Place, Singapore 618494, Tel: (65) 6510-6608, Fax: (65) 6510-6699
UNITED KINGDOM: Rockwell Automation Ltd., Pitfield, Kiln Farm, Milton Keynes, MK11 3DR, United Kingdom, Tel: (44)(1908) 838-800, Fax: (44)(1908) 261-917

Publication 5094-TD001H-EN-P - February 2023
Supersedes Publication 5094-TD001G-EN-P - June 2022

Copyright © 2023 Rockwell Automation, Inc. All rights reserved.